Project Manual

For

Georgetown Elementary School Classroom & Kitchen Additions

Indian River School District

Volume 1

BECKER MORGAN GROUP, INC.

EDiS Company

March 2, 2015

SECTION 000110 - TABLE OF CONTENTS

DIVISION 0 - PROCUREMENT AND CONTRACT REQUIREMENTS

000110 Table of Contents
001113 Advertisement for Bid
002113 Instructions to Bidders
003132 Geotechnical Data
004100 Bid Forms
005200 Agreement Forms
006113 Performance and Payment Bond Forms
006216 Certificate of Insurance
007200 General Conditions
007300 Supplementary Conditions
007343 Wage Rate Requirements

DIVISION 1 - GENERAL REQUIREMENTS

011100 Summary of Work - Work Covered by Contract Documents
012100 Allowances
012200 Unit Prices
012300 Alternates
012600 Change Order Procedures
012613 Contractor Compensation
012900 Payment Procedures
013113 Project Coordination Meetings
013119 Pre-installation Meetings
013125 Web-Based Project Management System
013216 Construction Progress Schedule
013219 Submittals Register
013226 Contractor Daily Reports
013300 Submittal Procedures
013500 Contractor Employee Background Check
013523 Safety Program
014500 Quality Control
015113 Temporary Electricity
015123 Temporary Heating, Cooling, and Ventilating
015200 Construction Facilities & Temporary Controls
016200 Material and Equipment
017123 Field Engineering [Include Survey & Layout Data]
017329 Cutting and Patching
017700 Contract Closeout
019113 General Commissioning Requirements
019114 Plumbing Commissioning Requirements
019115 HVAC Commissioning Requirements
019116 Electrical Systems Commissioning Requirements

Division 02 - Existing Conditions
024119 Selective Demolition

Division 03 - Concrete
033000 Cast-In-Place Concrete

Division 04 – Masonry
042000 Unit Masonry
047200 Cast Stone Masonry

Division 05 - Metals
051200 Structural Steel Framing
052100 Steel Joist Framing
053100 Steel Decking
054000 Cold-Formed Metal Framing
054400 Cold-Formed Metal Trusses
055000 Metal Fabrications
055100 Metal Stairs
055213 Pipe And Tube Railings

Division 06 - Wood, Plastics, And Composites
061000 Rough Carpentry
061600 Sheathing
064023 Interior Architectural Woodwork

Division 07 - Thermal And Moisture Protection
072100 Thermal Insulation
072110 Insulating Air Barrier System
073113 Asphalt Shingles
074646 Fiber-Cement Siding
075323 Ethylene-Propylene-Diene-Monomer (Epdm) Roofing
076200 Sheet Metal Flashing And Trim
077200 Roof Accessories
078413 Fire Protection, Hvac & Plumbing Penetration Firestopping
079200 Joint Sealants
079500 Expansion Control

Division 08 - Openings
081113 Hollow Metal Doors And Frames
081416 Flush Wood Doors
084113 Aluminum-Framed Entrances And Storefronts
087100 Door Hardware
088000 Glazing
089000 Louvers And Vents

DIVISION 09 – FINISHES
092216 Non-Structural Metal Framing
092900 Gypsum Board
093000 Tiling
095113 Acoustical Panel Ceilings
096513 Resilient Base And Accessories
096519 Resilient Tile Flooring
096723 Resinous Flooring
099113 Exterior Painting
099123 Interior Painting
099600 High Performance Coatings

Division 10 – Specialties
101100 Visual Display Units
101400 Signs
102113 Toilet Compartments
102800 Toilet, Bath And Laundry Accessories
104400 Fire Protection Specialties
105613 Metal Storage Shelving

Division 11 - Equipment
113100 Residential Appliances
114000 Foodservice Equipment

Division 12 – Furnishings
122113 Horizontal Louver Blinds
123200 Institutional Casework

Division 13 – Special Construction
Not Applicable

Division 14 - Conveying Equipment
Not Applicable

VOLUME 2

Division 21 - Fire Protection
210500 Common Work Results For Fire Protection
210505 Fire Protection Piping, Fittings And Valves
211003 Water Based Fire Suppression System – Sprinklers And Standpipes

Division 22 – Plumbing
220500 Common Work Results For Plumbing
220505 Plumbing Piping, Fittings And Valves
220701 Plumbing Insulation
221313 Facility Sanitary Sewers
224000 Plumbing Fixtures
224005 Plumbing Equipment

Division 23 - Heating Ventilating And Air Conditioning
230500 Common Work Results For Hvac
230505 Hvac Piping, Fittings And Valves
230548 Vibration Controls For Hvac, Plumbing And Fire Protection Equipment
230593 Testing Adjusting And Balancing For Hvac And Plumbing
230600 Heating, Ventilating And Air Conditioning Equipment
230701 Hvac Insulation
230900 Instrumentation And Controls Of Hvac And Plumbing Systems
233000 Hvac Air Distribution
238126 Variable Refrigerant Volume Split Systems With Heat Recovery
238222 Packaged Kitchen Hood Ventilation Control System

Division 26 – Electrical
260500 Common Work Results For Electrical
260502 Electrical Demolition For Remodeling
260511 Cooler And Freezer Wiring
260512 Kitchen Equipment Wiring
260519 Conductors And Cables
260520 Electric Heating Cables
260526 Grounding And Bonding
260528 Electrical Firestopping
260529 Hangers And Supports
260533 Raceways And Boxes
260534 Surface Metal Raceway
260535 Miscellaneous Raceway System
260543 Underground Ductbanks
260544 Innerduct
260545 Utility Holes
260553 Electrical Identification
260573 Short Circuit Analysis, Coordination Study And Arch Flash Hazard Analysis
260924 Low Voltage Lighting Control (Lc&D)
260926 Occupancy Sensors
262200 Transformers
262416 Panelboards
262726 Wiring Devices
262813 Fuses

Division 26 – Electrical (continued)
262816 Disconnect Switches & Circuit Breakers
262913 Motor Controllers
265100 Interior Lighting

Division 27 – Communications
270500 Common Work Results For Communications
272000 Communications Equipment And Cabling
275117 Public Address

Division 28 - Electronic Safety And Security
280500 Common Work Results For Electronic Safety And Security
280510 Area Of Refuge-Area Of Rescue Assistance Signal System
283112 Fire Alarm System – Existing System Expansion

Division 31 - Earthwork
311000 Site Clearing
312000 Earth Moving
312319 Dewatering
315000 Excavation Support
321216 Asphalt Paving
321313 Concrete Paving
323113 Chain Link Fences And Gates

Division 32 - Exterior Improvements
Not Applicable

Division 33 - Utilities
Not Applicable

End Table Of Contents

SECTION 001113 ADVERTISEMENT FOR BID

Receipt of Bids

Public notice is hereby given that sealed bids for the following prime contracts will be received for the construction of the Georgetown Elementary School Classroom & Kitchen Additions project, located at 301 West Market Street, Georgetown, Delaware 19947. Bids will be received at the Indian River Educational Complex, 31 Hosier Street Selbyville, Delaware 19975 until 4:00 pm local time on May 21st, 2015, at which time they will be publicly opened and read aloud. ***Bidder bears the risk of late delivery. Any bids received after the stated time will be returned unopened.*** The time and location of the bid opening may be extended with a minimum of 2 calendar days notice to the Bidders.

Contract: A-01: Sitework
Contract: A-02: Concrete
Contract: A-03: Masonry
Contract: A-04: Structural Steel & Misc. Metals
Contract: A-05: Carpentry & General Work
Contract: A-06: Roofing
Contract: A-07: Glass & Glazing
Contract: A-08: Acoustical Ceilings
Contract: A-09: Flooring
Contract: A-10: Painting
Contract: A-11: Kitchen Equipment
Contract: A-12: Fire Protection
Contract: A-13: Mechanical
Contract: A-14: Electrical

Bidding Documents

Bid documents will be available on the EDiS FTP site. To obtain access to the FTP site, please submit your request via email to Nancy Hession nhession@ediscompany.com. Your request should include the following information: your company name, contact name, email address, phone number, and postal mailing address. Upon receipt of this information, instructions detailing how to access the bid document on the FTP site will be emailed to you.

Bid Security

A bid security in the amount of 10% of the bid with consent of surety must accompany each bid. Bid security shall specify the Owner as the obligee. Owner: Indian River School District.

Pre-Bid Meeting

A pre-bid meeting will be held in the cafeteria at Georgetown Elementary School, located at 301 West Market Street, Georgetown, Delaware 19947 on May 6th, 2015 at 4:00 pm local time. Attendance is highly suggested but not mandatory.

Questions

Please contact EDiS Company, Mike Neal, mneal@ediscompany.com or 302-421-2881 with questions.

Conformance to the Delaware Architectural Accessibility Act and the standards of the Architectural Accessibility Board is required on the Project.

END OF SECTION

SECTION 002113 - INSTRUCTIONS TO BIDDERS

1. DEFINITIONS

1.1 Bidding Documents include the Bidding Requirements and the proposed Contract Documents. The Bidding Requirements consist of the Advertisement for Bid, Invitation to Bid, Instructions to Bidders, Supplementary Instructions to Bidders (if any), General Conditions, Supplementary General Conditions, General Requirements, Special Provisions (if any), the Bid Form (including the Non-collusion Statement), and other sample bidding and contract forms. The proposed Contract Documents consist of the form of Agreement between the Owner and Contractor, as well as the Drawings, Specifications (Project Manual) and all Addenda issued prior to execution of the Contract.

1.2 All definitions set forth in the General Conditions and the other Contract Documents are applicable to the Bidding Documents.

1.3 "Addenda" are written or graphic instruments issued by the Architect/Engineer prior to the receipt of bids which modify or interpret the Bidding Documents, by additions, deletions, clarifications or corrections. Addenda become part of the contract documents upon execution of the agreement.

1.4 The term Work is defined in 1.1.3 of the General Conditions.

1.5 A "Unit of Work" includes all Work covered by the one or more Sections of the specifications listed under that particular Unit of Work in Section 011100 - SUMMARY OF WORK. A Unit of Work is the smallest portion of the Project for which a separate Bid will be accepted by the Construction Manager. The word "Unit" means "Unit of Work" whenever the context clearly implies "Unit of Work".

1.6 A "Bid" is a complete and properly executed proposal to do one or more Units of Work for the sum stipulated therein.

1.7 A "Bidder" is one who submits a Bid to the Bidding Agency for the Unit or Units of Work indicated therein.

1.8 A substantial amount of specification language constitutes definitions for terms found in other Contract Documents, including drawings, which must be recognized as diagrammatic in nature and not completely descriptive of requirements indicated thereon. Certain terms used in Contract Documents are defined generally in this article. Definitions and explanations to this section are not necessarily either complete or exclusive, but are general for the work to the extent not stated more explicitly in another provision of Contract Documents.

1.9 General Requirements (or Conditions) apply to entire work of Contract and, where so indicated, to other elements which are included in the project.

1.10 The term "indicated" is a cross reference to details, notes or schedules on the Drawings, to other similar means of recording requirements in the Contract Documents. Where terms such as "shown", "noted", "schedule" and "specified" are used in lieu of "indicate," it is for purpose of helping to locate cross reference and no limitation of location is intended, except as specifically noted.

1.11 Where not otherwise explained, terms such as "directed", "requested", "authorized", "selected", "approved", "required", "accepted" and "permitted" mean "directed by Construction Manager or Architect", "requested by Construction Manager or Architect", etc.

1.12 Where used in conjunction with Construction Manager's or Architect's response to submittals, requests, applications, inquiries, reports and claims by Contractor, the meaning of the term "approved" will be held to limitations of Construction Manager's and Architect's responsibilities and duties as specified in General and Supplementary Conditions. In no case will "approval" by Construction Manager or Architect be interpreted as a release of Contractor from responsibilities to fulfill requirements of the Contract Documents.

1.13 The "Project Site" is the space available to Contractor for performance of the Work, either exclusively or in conjunction with others performing other work as part of the Project. The extent of project site is shown on the Drawings and may or may not be identical with description of the land upon which project is to be built. The Contractor shall visit the site to verify contract or construction limits.

1.14 Except as otherwise defined in greater detail, term "furnish" is used to mean supply and deliver to project site, ready for unloading, unpacking, assembly, installation, etc., as applicable in each instance.

1.15 Except as otherwise defined in greater detail, term "install" is used to describe operations at project site including unloading, unpacking, assembly, erection, placing, anchoring, applying, working to dimension, finishing, curing, protecting, cleaning and similar operations as applicable in each instance.

1.16 Except as otherwise defined in greater detail, term "provide" means furnish and install, complete and ready for intended use, as applicable in each instance.

1.17 An "Installer" is the entity, person or firm, engaged by the Contractor or his subcontractor or sub-subcontractor for the performance of a particular unit of work at the project site, including installation, erection, application and similar required operation. It is a general requirement that such installers be expert in operations they are engaged to perform.

1.18 The duties and obligations of the Contract apply to this Contractor (as defined herein) regardless of similar or identical duties or obligations of other Prime

Contractors related to the Project. Therefore, even though other Prime Contractors may have similar, identical or overlapping duties and obligations, each and every duty and obligation set forth in this Contract is enforceable against this Contractor.

2. BIDDER'S REPRESENTATION

2.1 Each Bidder in submitting its bid represents that:

1. It has read and understands the Bidding Documents and its Bid is made in accordance therewith.

2. Contractor has visited the site; familiarized himself with the local conditions under which the work is to be performed; compared the site with drawings and specifications; satisfied himself of the conditions of delivery, handling and storage of materials and all other matters that may be incidental to the Work before submitting his Bid.

3. Its Bid is based upon the materials and equipment described within the Bidding Documents without exceptions.

2.2 EVIDENCE OF REPRESENTATION

1. Submission of a Bid will be considered as evidence of the bidder's representation. No allowance will subsequently be made to the successful contractor by reason of any error omission on his part, due to his neglect in complying with the requirements of this article.

3. BIDDING DOCUMENTS

3.1 ISSUANCE

1. The drawings and specifications of preceding bid packages may not be issued with the drawings and specifications of this bid package, but are included by reference in the Table of Contents. Contractors bidding on work in this bid package are responsible for knowing what work has preceded this bid package and how it affects its work. In order to assist contractors in this effort, the contract documents from preceding or simultaneous bid packages will be available for review at the Construction Manager's main office and job site office. Contractors wishing to borrow these documents may do so by paying a $75.00 per set refundable deposit. Bidding documents will be made available to qualified bidders only. Contractors are advised that no change orders will be allowed that are based on ignorance of work assigned in preceding or simultaneous bid packages.

2. Bidding Documents will not be issued to subcontractors or other individuals or organizations who will not be contracting directly with the Owner.

3. The complete set of Bidding Documents shall be used in preparing bids; neither the Owner, the Architect nor the Construction Manager assume any responsibility for errors or misinterpretations resulting from the use of incomplete sets of Bidding Documents.

4. The Owner, Architect, and the Construction Manager, in making copies of Bidding Documents available on the above terms, do so only for the purpose of obtaining bids on the Work and do not confer a license or grant for any other use.

3.2 INTERPRETATION OR CORRECTION OF BIDDING DOCUMENTS

1. Bidders shall examine the Bidding Documents carefully and shall promptly notify the Construction Manager of any ambiguity, inconsistency or error which they may discover. No request for adjustment of Contract Time or Sum shall be permitted with regard to any purported ambiguity, inconsistency or error not promptly noticed to the Construction Manager.

2. Bidders requiring clarification or interpretation of the Bidding Documents shall make a written request to the Construction Manager to reach him at least seven days prior to the date of receipt of bids.

3. Any interpretation, correction or change of the Bidding Documents will be made by Addendum. Interpretations, corrections, or changes of the Bidding Documents made in any other manner will not be binding, and Bidders shall not rely upon such interpretations, corrections, and changes.

3.3 SUBSTITUTIONS

1. Refer to Specification Section 016200 - MATERIAL AND EQUIPMENT.

2. Substitution requests must be made at least seven (7) days prior to the receipt of bids.

3.4 ADDENDA

1. Addenda will be emailed, mailed, faxed or delivered to each person or firm recorded by the Construction Manager as having received a complete set of the Bidding Documents, and will be available for inspection wherever the Bidding Documents are kept available for that purpose.

2. Sub-Bidders, Suppliers, Manufacturers and others wishing to have Addenda mailed free of charge directly to them should address a letter to the Construction Manager requesting a listing on the Addenda mailing list for this Project. Such letter must include no other subject matter, must clearly identify

this Project by name, and must indicate, line for line, exactly how the name and address is to be typed on the envelope. Phone requests will not be accepted. The Construction Manager will endeavor, but expressly does not promise, to mail Addenda directly to those who have properly requested. Such mailing list is for this one Project only.

3. Addenda issued during the time of bidding shall be listed on Bid form in the space provided. Failure of a Bidder to receive any Addendum shall not release the Bidder from any obligations under his Bid, provided said addendum was sent by fax or by U.S. Mail to the address furnished by the bidder for transmittal of mail. Faxed Addenda will be confirmed by U. S. Mail.

4. No Addenda will be issued later than three (3) days prior to the date for receipt of Bids, except an Addendum withdrawing the request for Bids or one which extends the time or changes the location for the opening of Bids.

4. BIDDING PROCEDURE

4.1 FORM AND STYLE OF BIDS

1. Bids shall be submitted in triplicate upon the proposal form included in these specifications, or upon an exact copy of it.

2. The Bidder shall complete all blank spaces on the Bid form.

3. Where indicated on the Bid form, sums shall be expressed in both words and figures. In case of discrepancy between the two, the written amount shall govern.

4. Any interlineation, alteration or erasure of an entry made in a blank space of the form must be initialed by the signer of the Bid. However, no interlineation, alteration or erasure shall be made in the wording printed on the bid form unless the Bidder is instructed by the Bidding Documents to do so. The Bidders shall add no stipulations or qualifications on the Bid form or accompanying the bid form unless permitted by or instructed by the Bidding Documents to do so.

5. All requested quantities, unit prices and alternates shall be included as part of the bid.

6. All signatures shall be in long hand.

7. The Bidder shall include on the Bid Form, within the Base Bid total costs associated with providing both the Labor and Material Payment and Performance Bonds.

8. The Bidder shall affix his seal to the bid form, if organized as a corporation.

4.2 SUBMISSION OF BIDS

1. Bids shall be deposited at the designated location prior to the time and date for receipt of Bids indicated in the Invitation to Bid, or any extension thereof made by Addendum. The time and location of the bid opening may be extended with a minimum of two (2) calendar days notice to the Bidders. Bids received after the time and date for receipt of Bids will be marked "LATE BID" and returned.

2. The Bid Proposal (3 copies) shall be enclosed in a sealed envelope. The envelope shall be addressed to the Owner, and shall be identified with the Project name, the Bidder's name and address and the Unit of Work included in the Bid.

3. If the Bidder submits his Bid by mail, he shall enclose the above described sealed envelope in a separate mailing envelope with the notation "BID ENCLOSED' on the face thereof.

4. Bids shall include a fully executed Bid Bond, Power of Attorney, Non-collusion Statement, Consent of Surety and Subcontractor listing.

4.3 MODIFICATION OR WITHDRAWAL OF BID

1. A Bidder may modify his Bid in writing at any time prior to the time scheduled for receiving Bids, provided such written modification is received by the Construction Manager prior to said time.

2. Unless specifically authorized, faxed bids will not be considered.

3. No Bidder shall modify, withdraw or cancel his Bid or any part thereof for NINETY (90) days after the time designed for the receipt of Bids, in the Invitation to Bid. (***Project Manager's Note: Verify and coordinate with Bid Forms.)*** Any further extension of the time will be by mutual consent of the Owner and the Contractor.

4. A Bid may be withdrawn up until the time scheduled for receiving the Bids. Such withdrawal shall be in writing.

5. CONSIDERATIONS OF BIDS

5.1 OPENING OF BIDS

1. Bid shall be publicly opened and read aloud.

5.2 REJECTION OF BIDS

1. The Owner, in its sole discretion, shall have the right to reject any or all bids for any reason or for no reason whatsoever.

5.3 ACCEPTANCE OF BIDS

1. The Owner, in its sole discretion, shall have the right to waive any informality or irregularity in any Bid received.

2. The Owner shall have the right to accept Alternates in any order or combination.

6. SUBCONTRACT INFORMATION

6.1 SUBMISSION OF SUBCONTRACTOR LIST

1. Should the Contractor fail to utilize any or all of the Subcontractors in the Contractor's Bid statement in the performance of the Work on the public bidding, the Contractor shall be penalized in the amount of (project specific amount *). The Agency may determine to deduct payment of the penalty from the Contractor or have the amount paid directly to the Agency. Any penalty amount assessed against the Contractor may be remitted or refunded, in whole or in part, by the Agency awarding the Contract, only if it is established to the satisfaction of the Agency that the Subcontractor in question has defaulted or is no longer engaged in such business. No claim for the remission or refund of any penalty shall be granted unless an application is filed within one year after the liability of the successful Bidder accrues. All penalty amounts assessed and not refunded or remitted to the Contractor shall be reverted to the State.

   * one (1) percent of the contract amount not to exceed $10,000.

2. Upon request of the Construction Manager, the Bidder shall within seven (7) days of the request submit a list of the other subcontractors or other persons or organizations (including those who are to furnish materials or equipment fabricated to a special design) if any, proposed for the various portions of the Work not included in the subcontractors list submitted with the bid.

3. The Bidder will be required to establish to the satisfaction of the Construction Manager the capability and experience of all proposed subcontractors to furnish and perform the work described in the sections of the specifications pertaining to such proposed subcontractor's respective trades.

4. Subcontractors and other persons and organizations proposed by the Bidder and accepted by the Owner must be used on the work for which they were proposed and accepted, and shall not be changed except with the written approval of the Construction Manager.

7. EQUALITY OF EMPLOYMENT OPPORTUNITY ON PUBLIC WORKS

During the performance of this Contract, the Contractor agrees as follows:

7.1 The Contractor will not discriminate against any employee or applicant for employment because of race, creed, color, sex or national origin. The Contractor will take affirmative action to ensure the applicants are employed, and that employees are treated during employment, without regard to their race, creed, color, sex or national origin. Such action shall include, but not be limited to, the following: Employment, upgrading, demotion or transfer; recruitment or recruitment advertising; layoff or termination; rates of pay or other forms of compensation; and selection for training including apprenticeship. The Contractor agrees to post in conspicuous places available to employees and applicants for employment notices to be provided by the contracting agency setting forth this nondiscrimination clause.

7.2 The Contractor will, in all solicitants or advertisements for employees placed by or on behalf of the Contractor, state that all qualified applicants will receive consideration for employment without regard to race, creed, color sex, or national origin.

7.3 The term "Contract for public works" means construction, reconstruction, demolition, alteration and repair work and maintenance work paid for, in whole or in part, with public funds.

7.4 The Secretary of the Department of Labor shall be responsible for the administration of this section and shall adopt such rules and regulations and issue such orders as he deems necessary to achieve the purpose thereof, provided that no requirement established herby shall be in conflict with subchapter 6904 of this title.

8. PREVAILING WAGE REQUIREMENT

8.1 Wage Provisions: In accordance with Delaware Code, Title 29, Section 6960, renovation projects whose total cost shall exceed $15,000 and $100,000 for new construction, the minimum wage rates for various classes of laborers and mechanics shall be as determined by the Department of Labor, Division of Industrial Affairs of the State of Delaware.

8.2 The prevailing wage shall be the wage paid to a majority of employees performing similar work as reported in the Department's annual prevailing wage survey or in the absence of a majority, the average paid to all employees reported.

8.3 The Contractor shall pay all mechanics and labors employed directly upon the site of work, unconditionally and not less often than once a week and without subsequent deduction or rebate on any account the full amounts accrued at time of payment, computed at wage rates not less than those stated in the specifications, regardless of any contractual relationship which may be alleged to exist between the employer and such laborers and mechanics.

8.4 The scale of the wages to be paid shall be posted by the employer in a prominent and easily accessible place at the site of the work.

8.5 Every contract based upon these specifications shall contain a stipulation that certified sworn payroll reports be maintained by every Contractor and Subcontractor performing work upon the site of construction. The Contractor and Subcontractor shall keep and maintain the sworn payroll information for a period of 2 years from the last day of the work week covered by the payroll. A certified copy of these payroll reports shall be made available: 1) Effective June 30, 2007, all Contractors performing work on public work projects are required to furnish sworn payroll records on a weekly basis to the Department of Labor. Specifically, 29 Del. C. § 6960(c) states that "(e)very contract… shall contain a stipulation that sworn payroll information, as required by the Department of Labor, be furnished weekly." Further, that "(t)he Department of Labor shall keep and maintain the sworn payroll information for a period of 6 months from the last day of the work week covered by the payroll." Lastly, the failure to submit payroll reports shall be subject to a civil penalty of not less than $1,000 nor more than $5,000 for each violation. 29 Del. C. § 6960(e). Sworn payroll information shall consist of a fully completed and notarized report on a form provided upon request by the Department of Labor. *See* Delaware Prevailing Wage Regulations VII A.2(c)"; 2) upon request by the public or for copies thereof. However, a request by the public must be made through the Department of Labor. The requesting party shall, prior to being provided the records, reimburse the costs of preparation by the Department of Labor in accordance with the Department's copying fee policy. The public shall not be given access to the records at the principal office of the Contractor or Subcontractor; and 3) the certified payroll records shall be on a form provided by the Department of Labor or shall contain the same information as the form provided by the Department and shall be provided within 10 days from receipt of notice requesting the records from the Department of Labor.

9. PERFORMANCE AND PAYMENT BONDS

9.1 The Contractor shall be required to furnish bonds covering the faithful performance of the contract and the payment of all obligations arising thereunder with such sureties secured through the Bidder's usual sources as may be agreeable to the parties. The Owner shall be noted as the obligee.

9.2 The performance and payment bonds shall each be in an amount equal to 100% of the Contract Sum as adjusted from time to time. The Owner shall be noted as the obligee.

9.3 TIME OF DELIVERY AND FORM OF BONDS

1. The Bidder shall deliver the required bonds within seven (7) days from receipt of request from the Construction Manager.

2. The performance and payment bonds shall be written in the form found in Section 00600 Bonds.

3. The required bonds shall be by an authorized agent of the bonding company and shall be accompanied by a certified and current copy of the bonding agent's Power of Attorney, indicating the monetary limit of such power. The bonding company shall be licensed to operate in the state which the work is to be performed.

10. EXECUTION OF AGREEMENT

10.1 The Agreement will be written on a contract form, stipulated by the Owner, a copy of which is included in the Specifications.

10.2 The Bidder shall, within seven (7) days following its presentation, execute the Agreement and return it to the Construction Manager.

10.3 The Bidder agrees to commence work within seven (7) days of 1) execution of the Agreement, or 2) receipt of a Letter of Intent to execute the Agreement, or other authorization to proceed, if furnished at an earlier date.

10.4 If the successful Bidder fails to execute the required Contract and Bond, as aforesaid, within twenty (20) days after the date of official Notice of the Award of the Contract, their Bid guaranty shall immediately be taken and become the property of the State for the benefit of the Agency as liquidated damages, and not as a forfeiture or as a penalty. Award will then be made to the next lowest qualified Bidder of the Work or re-advertised, as the Agency may decide.

11. GENERAL COMMENTS

11.1 JOINT VENTURE AGREEMENTS

In the event of a mandatory pre-bid meeting, representatives of both Joint Ventures must attend the pre-bid meeting and must be an officer and co-joint venture of the corporations involved.

Each Joint Venture shall be qualified and capable to complete the project with their own forces.

Included with the bid submission, and as a requirement to bid, a copy of the executed Joint Venture Agreement shall be submitted and signed by all Joint Ventures involved.

All required bid bonds, performance bonds, material and labor payment bonds must be executed by both Joint Ventures and be placed in both of their names.

All required insurance certificates shall name both Joint Ventures.

Both Joint Ventures shall sign the bid form and shall submit a valid Delaware Business License with their bid.

Both Joint Ventures shall include their Federal E. I. Number with the bid.

Due to exceptional circumstances and for good cause shown, one or more of these provisions may be waived at the discretion of the Owner.

11.2 BUSINESS LICENSES FOR SUBCONTRACTORS

The successful Bidder shall provide to the agency to which it is contracting, within 30 days of entering into such public works contract, copies of all Delaware Business licenses and taxpayer identification number (i.e. federal employer identification number or social security number) of subcontractors and/or independent contractors that will perform work for such public works contract. However, if a subcontractor or independent contractor is hired or contracted more than 20 days after the Bidder entered the public works contract the Delaware Business license of such subcontractor or independent contractor shall be provided to the agency within 10 days of being contracted or hired.

11.3 BONDING REQUIREMENTS FOR NON-RESIDENT CONTRACTORS

All non-resident contractors are reminded that they must supply a surety or cash bond to the Division of Revenue equal to six percent (6%) of the total of all contracts exceeding $20,000 for construction within this state. For Division of Revenue purposes, cash bonds and bank letters of credit issued by financial institutions will be accepted on all contracts.

11.4 CONTRACT AWARD TO NON-RESIDENT CONTRACTORS

Every architect, or professional engineer or contractor or construction manager engaging in the practice of such profession shall furnish the Department of Finance within 10 days after entering into any contract with a contractor or subcontractor not

a resident of this State, a statement of the total value of such contract or contracts together with the names and addresses of the contracting parties.

11.5 STATE LICENSE AND TAX REQUIREMENTS

The Contractor and Subcontractor shall be licensed to do business in the State of Delaware and shall pay all fees and taxes due under State laws. In conformance with Section 2503, Chapter 25, Title 30, Delaware Code, "the Contractor shall furnish the State Tax Department within ten (10) days after award of the Contract, a statement of the total values of each contract and subcontract, together with the names and addresses of the contracting parties . . ."

11.6 RIGHT TO AUDIT RECORDS

The Owner (contracting agency) shall have the right to audit the books and records of a Contractor or any Subcontractor under any Contract or Subcontract to the extent that the books and records relate to the performance of the Contract or Subcontract.

Said books and records shall be maintained by the Contractor for a period of three (3) years from the date of final payment under the Prime Contract and by the Subcontractor for a period of three (3) years from the date of final payment under the Subcontract.

END OF SECTION

SECTION 003132 – GEOTECHNICAL DATA

1. GENERAL

1.1 Owner's Disclaimer

A. Site Information: Data on subsurface conditions are made available in the Bidding Documents as a convenience to Bidders and the Contractor. They are not intended as representations or warrants of continuity of such conditions between soil borings. It shall be expressly understood that the Owner will not be responsible for interpretations or conclusions drawn there from by the Contractor. Additional test borings and other exploratory operations may be made by the Contractor at no additional cost to the Owner, provided such operations are acceptable to the Architect and Construction Manager.

1.2 SOIL BORING DATA

A. The project geotechnical report, prepared by Hillis-Carnes Engineering Associates, Inc. dated 12/19/13 and is included in this section. Also included is the subsurface utility engineering report, prepared by Soft Dig, dated 11/19/14.

HILLIS-CARNES
ENGINEERING ASSOCIATES, INC.

1277 McD Drive
Dover, Delaware 19901
Local 302-744-9855
Fax 302-744-9160
Toll Free 888-867-3134
www.hcea.com

Georgetown Elementary Addition
Geotechnical Engineering Study
Project No. D13110

Prepared For:

Mr. John Eckrich
Indian River School District
31 Hoosier Street
Selbyville, Delaware 19975

Prepared By:
Hillis-Carnes Engineering Associates, Inc.
1277 McD Drive
Dover, Delaware 19901

December 19, 2013

HILLIS-CARNES
ENGINEERING ASSOCIATES, INC.

1277 McD Drive
Dover, Delaware 19901
Local 302-744-9855
Fax 302-744-9160
Toll Free 888-867-3134
www.hcea.com

December 19, 2013

Mr. John Eckrich
Indian River School District
31 Hoosier Street
Selbyville, Delaware 19975

Reference: Georgetown Elementary Addition
Georgetown, Delaware
HCEA Project No. D13110

Dear Mr. Eckrich:

Hillis-Carnes Engineering Associates, Inc. (HCEA) is pleased to submit this report concerning the subsurface exploration and subsequent geotechnical evaluation for the proposed school addition in Georgetown, Delaware.

We wish to advise you that the boring samples will be stored at our Dover, Delaware office for a period of 30 days from the date of this letter. Should you wish that the samples be stored for a longer period of time or be delivered to you or another party, please advise us in writing prior to the end of the 30-day period. The samples will be discarded at the end of the 30-day storage period.

HCEA appreciates having had the opportunity to provide geotechnical services and will remain available for further consultation during the various design stages. Should there be any questions concerning the contents of the report, the requirement of additional consultation, design, inspection or testing services, please contact the Dover HCEA office.

Very truly yours,

HILLIS-CARNES ENGINEERING ASSOCIATES, INC.

JEREMY M. BOEHM
LICENSE
No. 17658
DELAWARE
PROFESSIONAL ENGINEER

Jeremy M. Boehm, P.E.
Project Engineer

Fernando García
Chief Engineer

TABLE OF CONTENTS

LETTER OF TRANSMITTAL i

1.0 PURPOSE AND SCOPE 1

2.0 PROJECT CHARACTERISTICS 1

3.0 FIELD EXPLORATION 1

4.0 SUBSURFACE CONDITIONS 2

4.1 Site Geology 2

4.2 Surficial Materials 3

4.3 Natural Materials 3

4.4 Groundwater 3

5.0 EVALUATIONS AND RECOMMENDATIONS 3

5.1 General Site Preparation 4

5.2 Fill Selection, Placement and Compaction 4

5.3 Foundations 5

5.4 Frost Protection 5

5.5 Ground-Supported Slabs 6

5.6 Groundwater and Drainage 6

6.0 RECOMMENDED ADDITIONAL SERVICES 6

7.0 REMARKS 7

ATTACHMENTS 9

GEOTECHNICAL ENGINEERING STUDY
GEORGETOWN ELEMENTARY SCHOOL ADDITION
GEORGETOWN, DELAWARE
HCEA JOB NO. D13110

1.0 PURPOSE AND SCOPE

The purpose of this study was to determine the general subsurface conditions at the boring locations and to evaluate those conditions with respect to the concept and design of a one-story and a two-story school addition in Georgetown, Delaware.

HCEA developed the evaluations and recommendations presented in this report from an analysis of project characteristics and an interpretation of the general subsurface conditions at the site based on the boring information. The stratification lines indicated on the boring logs represent the approximate boundaries between soil types. In-situ the transitions may be gradual. Such variations can best be evaluated during construction and any minor design changes can be made at that time.

An evaluation of the site with respect to potential construction problems and recommendations dealing with the earthwork and inspection during construction are also included. Such an inspection is considered necessary to verify the subsurface conditions and to verify that the soils-related construction phases are performed properly.

The *Appendix* contains a summary of the field work on which this report is based.

2.0 PROJECT CHARACTERISTICS

The project site is located at the existing Georgetown Elementary School at 301A West Main Street in Georgetown, Delaware.

The proposed construction includes a two-story, eight-classroom addition, a one-story kitchen addition, and associated stormwater management improvements. Tolerable settlements for the proposed additions are assumed to be ½ inch, total and differential.

If any of the project characteristics or required settlement criteria differ from those outlined above, our office should be contacted for a re-evaluation of the site and project characteristics.

3.0 FIELD EXPLORATION

In order to gain information as to the properties of the existing soils, HCEA performed four (4) Standard Penetration Test (SPT) borings in the addition areas and one (1) SPT boring to a depth of 15 feet in the stormwater management area. The approximate boring locations are shown on the Boring Location Plan (Figure 2) in the *Appendix* of this report. The proposed field infiltration test was cancelled due to unfavorable results from the stormwater management area SPT boring.

HCEA advanced the SPT borings with hollow-stem augers and sampled at 2.5 foot intervals in the upper 10 feet and at 5.0 foot intervals thereafter. Samples were taken by

driving a 1-3/8 inch I.D. (2-inch O.D.) split-spoon sampler in accordance with ASTM D-1586 specifications. The sampler was first seated 6 inches to penetrate any loose cuttings and then was driven an additional foot with blows of a 140 pound hammer falling 30 inches, imparting 350 foot-pounds of kinetic energy to the soil. The number of hammer blows required to drive the sampler from 6 inches to 18 inches of penetration is the "penetration resistance" or "N" value. The penetration resistance, when properly evaluated, is an index of the soil strength and compressive characteristics.

Representative portions of each soil sample were placed in jars and transported to HCEA's laboratory. In the lab, a Geotechnical Engineer classified the samples in accordance with the Unified Soil Classification System (USCS). The USCS symbols appear on the boring logs and the system nomenclature is briefly described in the Appendix. The stormwater management area borings were also classified in accordance with the United States Department of Agriculture (USDA) textural classification system.

4.0 SUBSURFACE CONDITIONS

Details of the subsurface conditions encountered at the site are shown on the *Records of Soil Exploration* boring logs. We provide a brief description of the subsurface conditions and pertinent engineering characteristics of the in the following sections. We estimated the strata divisions shown on the *Records of Soil Exploration* based on visual examinations of the recovered boring samples. In the field strata changes could occur gradually and/or at slightly different levels than indicated. Groundwater conditions indicated on the *Records of Soil Exploration* are those observed during the period of the subsurface exploration. Groundwater levels could fluctuate seasonally and may also be influenced by changes in grading, runoff, infiltration rates and other environmental factors.

We discuss generalized subsurface conditions based on the results of the borings in the following sections:

4.1 Site Geology

According to the Geologic Map of the Georgetown Quadrangle, Delaware, Geologic Map Series No. 15, prepared by the Delaware Geological Survey (DGS) and dated 2010, the area is underlain by the Beaverdam Formation. The Beaverdam Formation is described as a heterogeneous unit ranging from very coarse sand with pebbles to silty clay. Predominant lithologies at land surface are white mottled light-gray and reddish-brown, silty to clayey, fine to coarse sand. Laminae and beds of very coarse sand with pebbles to gravel are common. Laminae and beds of bluish-gray to light-gray silty clay are also common. In a few places near the land surface, but more commonly in the subsurface, beds ranging from 2 to 20-ft thick of finely laminated, very fine sand and silty clay are present. The sands of the Beaverdam Formation commonly have a white silt matrix that gives drill cuttings a milky appearance. This white silt matrix is the most distinguishing characteristic of the unit and readily differentiates the Beaverdam Formation from the adjacent clean sands of the Turtle Branch Formation. Interpreted to be a fluvial to estuarine deposit of late Pliocene age on the basis of pollen assemblages and regional stratigraphic relationships. Ranges from 50 to 120 feet thick in the Georgetown Quadrangle.

4.2 Surficial Materials

Surficial materials included organic bearing soils up to 10 inches in thickness, and gravel up to 4 inches in thickness. The thickness of organic bearing soils (topsoil) and other surficial material types may vary across the site.

4.3 Natural Materials

The soils encountered at the borings are consistent with the Beaverdam Formation. Subsurface soils generally consisted of materials classified as silty SAND (SM), poorly graded SAND (SP), and combinations thereof. A layer of clayey sand (SC) was encountered in all five borings, beginning approximately 2.5 feet below grade and extending to depths between 5.0 and 7.5 feet below grade.

"N" values generally indicated medium dense relative densities for the upper 5 to 10 feet of granular materials, becoming loose with depth. The silty clay layer was stiff. Refer to the *Records of Soil Exploration* for detailed information regarding the densities and consistencies of the soils in the SPT borings.

4.4 Groundwater

We encountered groundwater at depths approximately 8 feet below grade during drilling operations. The bored holes collapsed at depths between 4.0 and 6.5 feet below grade following removal of the augers.

A more accurate determination of the hydrostatic water table would require the installation of perforated pipes or piezometers which could be monitored over an extended period of time. The actual level of the hydrostatic water table and the amount and level of perched water may fluctuate throughout the year, contingent upon variations in precipitation, surface run-off, infiltration, site topography and drainage.

5.0 EVALUATIONS AND RECOMMENDATIONS

Our findings suggest that the site can be developed for the proposed structure utilizing conventional spread footings or ground-supported slab construction bearing on natural soils or newly placed engineered fill.

It is particularly important to verify that topsoil and other deleterious surface materials are properly stripped in the grading process, that subgrades are verified for firmness prior to adding the first lift of new fill, and that all grading operations are continuously monitored for material quality, lift thickness and compaction.

Special consideration should be given to the proper monitoring of fill operations, footing excavations, and concrete placement in all structural areas of the project.

HCEA developed the following recommendations based on the previously described project characteristics and subsurface conditions. If there are any changes to the project characteristics or if different subsurface conditions are encountered during construction, HCEA should be consulted so that the recommendations of this report can be reviewed and revised where necessary.

5.1 General Site Preparation

All existing structures (including all above and below ground construction) within the areas to be developed should be removed prior to the initiation of new construction. We suggest that all available information regarding the existing utilities at the site be reviewed prior to construction.

Removal should include the surficial materials, unsuitable existing fill, and deleterious materials from the areas to be developed. Stripping operations should be performed in a manner consistent with good erosion and sediment control practices.

After the initial stripping process is completed, areas of the site to receive fill, or areas of the site at grade where structures will be located, should be proof rolled. The proof rolling operations should be performed using a 20 ton, fully loaded dump truck or another pneumatic tire vehicle of similar size and weight. The purpose of the proof rolling will be to locate any near surface pockets of soft or loose soils requiring undercutting. An HCEA Geotechnical Engineer or experienced Soils Inspector should witness the proof rolling operations and should determine which areas need further undercutting and/or stabilization.

5.2 Fill Selection, Placement and Compaction

The Geotechnical Engineer should inspect, test, and approve all fill or backfill material. The on-site soils which are free from organic and other deleterious components can be re-used as structural fill. An experienced Soils Inspector can identify materials suitable for various construction purposes during grading operations.

If off-site borrow is required the imported materials should meet or exceed the requirements for structural fill set forth in the project specifications. We recommend that samples of all fill materials be submitted to our laboratory prior to placement to determine their compliance with any necessary material requirements.

Moisture conditioning (that is, wetting or drying) of the soils should be anticipated to achieve proper compaction. The moisture contents of the soils should be controlled properly to avoid extensive construction delays. If imported fill material is required, those materials should have Unified Soil Classifications of SM or better (better meaning lesser proportions of fine grained materials such as silts and clays).

Care should be exercised during the grading operations at the site. The traffic of heavy construction equipment could create pumping and a general deterioration of subgrade soil conditions in the presence of moisture. If it is at all possible, the grading should therefore be carried out during a dry season. Working during dry periods should reduce potential problems associated with excessively wet conditions, although they may not be eliminated. If such problems arise, the Geotechnical Engineer should be consulted for an evaluation of the conditions.

All structural fill should be placed in horizontal 8-inch (maximum) loose lifts and should be compacted to a minimum of 95 percent of the standard Proctor (ASTM D-698) maximum dry density. Fill materials in landscape and other non-structural areas should be

compacted to at least 92 percent of the standard Proctor maximum dry if significant subsidence of the fill under its own weight is to be avoided. Field moisture contents should be maintained within +/-2 percentage points of the optimum moisture content in order to provide adequate compaction.

Structural fill should extend a minimum of ten feet beyond building lines where floor slabs or shallow footings are to be constructed on the fill. Final slopes should be no steeper than 2(H):1(V). An experienced Engineering Technician should perform testing on a full-time basis to verify that the proper degree of compaction is obtained.

5.3 Foundations

Our findings indicate that the proposed structure can be supported on spread footings bearing on firm natural soils, on new engineered fill placed over natural soils or on a combination thereof. Footings should not be placed on or over any man-placed fill materials that are not properly certified by a Geotechnical Engineer or experienced Soils Inspector based on rigorous inspection and observations with a final approval by an HCEA Geotechnical Engineer during construction.

Based on the boring results and subsequent data analysis, it is the professional opinion of HCEA that the existing natural soils at the site will provide ***2,500*** pounds per square foot (psf) net allowable bearing capacity. We estimate total and differential settlements of less than ½ inch.

All footing excavations should be inspected by a Geotechnical Engineer or experienced Soils Inspector prior to the placement of concrete. The purpose of the inspection would be to verify the exposed materials will be capable of supporting the design bearing pressure. Such an inspection should include bearing tests performed with attention to adequate spacing and hand auguring to identify potential problem areas.

If soft or loose pockets are encountered in the footing excavations the unstable materials should be removed and the footings should be located at a lower elevation. Alternately, the unstable materials could be undercut and replaced with either new fill placed and compacted in accordance with the recommendations of Sections 5.1 and 5.2 of this report, or with lean (500 psi) concrete.

In all areas where foundations will be supported on structural fill the structural fill should extend a sufficient distance laterally beyond the perimeters of footings to encompass the zone of influence for the footings. For design purposes, the plans should reflect structural fill extending a minimum distance of 9 inches laterally beyond a footing perimeter for each linear foot of structural fill below the bearing level.

5.4 Frost Protection

Exterior footings and footings in unheated areas should be located at depths of at least 2.5 feet below final exterior grades so as to provide adequate protection from frost heave. If the structure is to be constructed during the winter months, or if the building interior will likely be subjected to freezing temperatures after footing construction, then all footings should be provided with adequate frost cover protection. Otherwise, interior footings can

be located on suitable materials at nominal depths (as required by design) below finished floor grade.

5.5 Ground-Supported Slabs

Floor slabs should be supported on approved, firm natural soils or on newly compacted fill. The slab subgrade should be prepared in accordance with the procedures outlined in Sections 5.1 and 5.2 of this report. Particular attention should be paid to the slab subgrade, which should be proofrolled to delineate any soft or loose areas requiring undercutting and/or stabilization.

HCEA recommends that the slabs be directly supported on a minimum 4 inch layer of clean granular materials such as washed sand, clean sand and gravel, or screened, crushed stone. A suitable moisture vapor barrier (polyethylene sheeting) should also be provided, if intrusion of water vapor into the structure through the floor slab is to be avoided. These procedures will provide a moisture break that will help to prevent capillary rise, dampness of the floor slabs, and also help to provide a good curing environment for the concrete. HCEA recommends that construction joints on the slab surface and isolation joints between the slab and structural walls be provided (such that the slab would "float" independently of the footings).

A composite modulus of subgrade reaction value "k_s" of 125 pci can be assumed for floor slabs founded on native silty sand (SM) soil approved for concrete placement by HCEA.

5.6 Groundwater and Drainage

We encountered groundwater at depths approximately 8 feet below grade during drilling operations. The boreholes collapsed at depths between 4.0 and 6.5 feet below grade following removal of the augers. Water was observed in boring B-1 at a depth of 5.8 feet below grade following removal of the augers. We interpret this to be perched water from the clayey sand layer. Based on the absence of seasonal high water indications above these depths, we estimate the seasonal high groundwater level to be approximately 8 feet below grade.

Adequate drainage should be provided at the site throughout construction to minimize any increases in the moisture contents of structural subgrade soils. Any water infiltration resulting from precipitation or surface run-off should be able to be controlled by means of sump pits and pumps, or by gravity ditching procedures if it is only necessary to lower the water by a minimal amount (on the order of 1± foot to 2± feet, or less). If any conditions are encountered which cannot be handled in such a manner, the Geotechnical Engineer should be consulted.

6.0 RECOMMENDED ADDITIONAL SERVICES

Additional soil and foundation engineering, testing and consulting services recommended for this project are summarized below:

Site Preparation: A Geotechnical Engineer or experienced Soils Inspector should inspect the site prior to the start of final grading. The inspector should determine if any

undercutting or in-place densification is necessary to prepare a subgrade for fill placement or for slab support.

Fill Placement and Compaction: A Geotechnical Engineer or experienced Soils Inspector should witness any required filling operations and should take sufficient in-place density tests to verify that the specified degree of fill compaction is achieved. He should observe and approve borrow materials used and should determine if their existing moisture contents are acceptable.

Footing Excavation Inspections: A Geotechnical Engineer or an experienced Soils Inspector should inspect footing excavations prior to pouring the foundation. It is necessary to verify that the design bearing pressure criteria has been achieved and that no loose pockets exist beneath the bearing surfaces of the footing excavations. Based on the inspection, the Inspector would either approve the bearing surfaces or recommend that loose or soft soils be undercut to expose satisfactory bearing materials. Particular care should be exercised for footings bearing on existing man-placed fill materials.

7.0 REMARKS

This report has been prepared to aid in the evaluation of the site for the proposed construction. It is considered that adequate recommendations have been provided to serve as a basis for design of plans and specifications. Additional recommendations can be provided as needed.

These analyses and recommendations are based on the information made available at the time of writing the report as relevant to on-site conditions including surface and subsurface existing at the time the exploratory borings were drilled. Further assumption has been made that the limited exploratory borings in relation both to the area of the site and to depth are representative of conditions across the site. The recommendations contained herein have been based on a series of widely spaced soil borings. Actual subsurface conditions encountered could vary from those outlined in this report.

If subsurface conditions are encountered which differ from those reported herein, this office should be notified immediately so that the analyses and recommendations can be reviewed and/or revised as necessary. It is also recommended that:

1. We are given the opportunity to review any existing man-placed fill certifications, plans and specifications prepared subsequent to the final geotechnical study in order to comment on the interaction of the soil conditions as described herein and the design requirements.

2. A Geotechnical Engineer or experienced Soils Inspector is present at the site during the construction phase to verify installation according to the approved plans and specifications. Such a presence of an inspector is particularly important during excavation, placement, and compaction of fill materials.

Please note that successful completion of the project is dependent on the compliance with all of the recommendations provided in this report. While represented separately, the recommendations represent work that is intertwined. The successful completion of the project is specifically conditioned on your complying with all recommendations.

Our professional services have been performed, our findings obtained and our recommendations prepared in accordance with generally accepted engineering principles and practices. This warranty is in lieu of all other warranties either implied or expressed. Hillis-Carnes Engineering Associates, Inc. assumes no responsibility for interpretations made by others based on work or recommendations made by HCEA.

ATTACHMENTS

Figure 1: Site Location Map

Figure 2: Boring Location Plan

Records of Soil Exploration

Laboratory Test Results

Field Classification Sheet

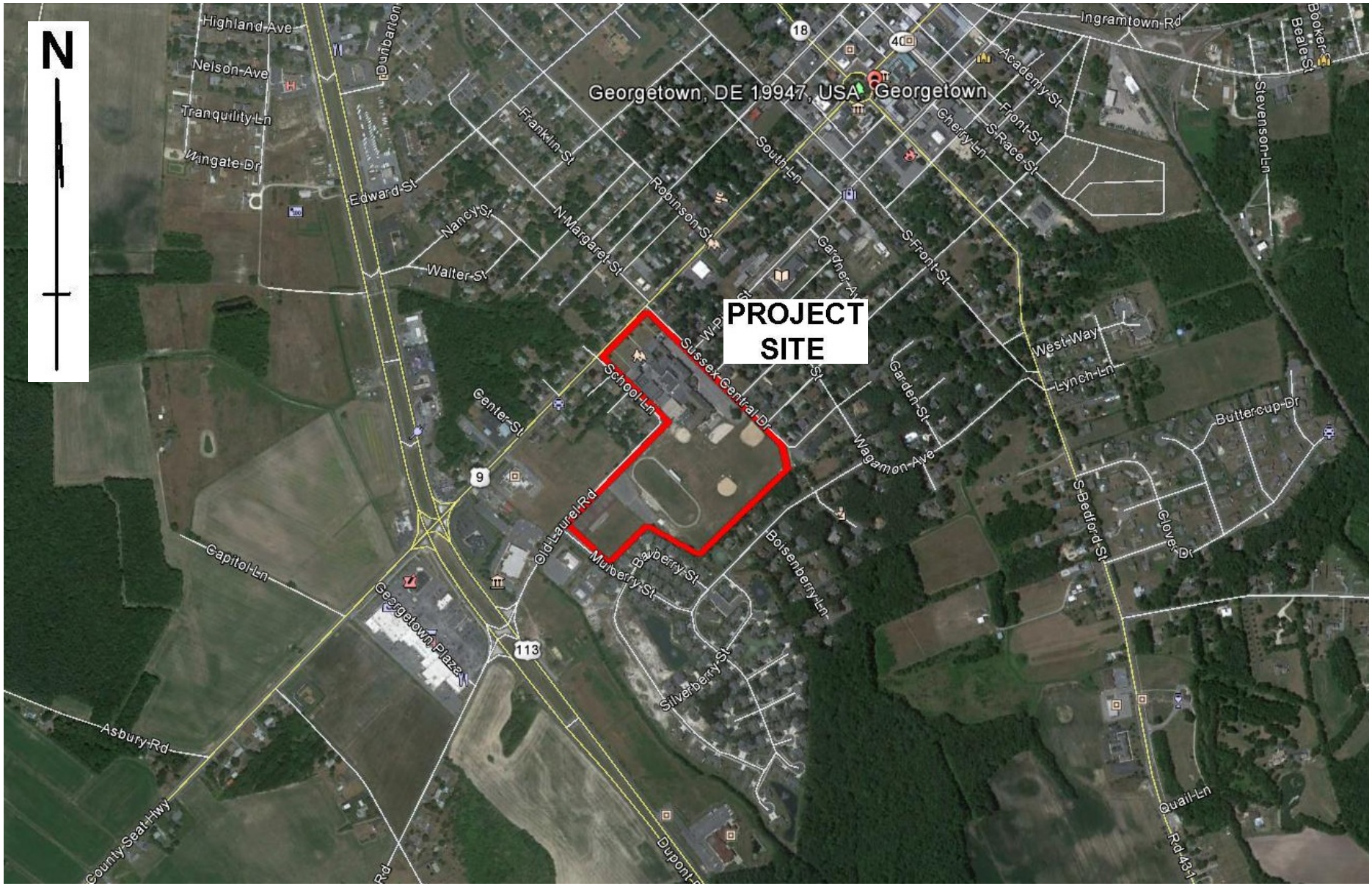

H I L L I S - C A R N E S	**PROJECT LOCATION MAP**	**JOB No:**	D13110	**DESIGN BY:**	Google
ENGINEERING ASSOCIATES, INC.	**FIGURE 1**	**DATE:**	12/19/2013	**DRAWN BY:**	Google
1277 McD Drive Dover, DE 19901	Georgetown Elementary School	**SCALE:**	NTS		
PHONE: (302) 744-9855 FAX: (302) 744-9160	Georgetown, Delaware	**PAGE:**	1	**CHECKED BY:**	JMB

HILLIS-CARNES ENGINEERING ASSOCIATES, INC.

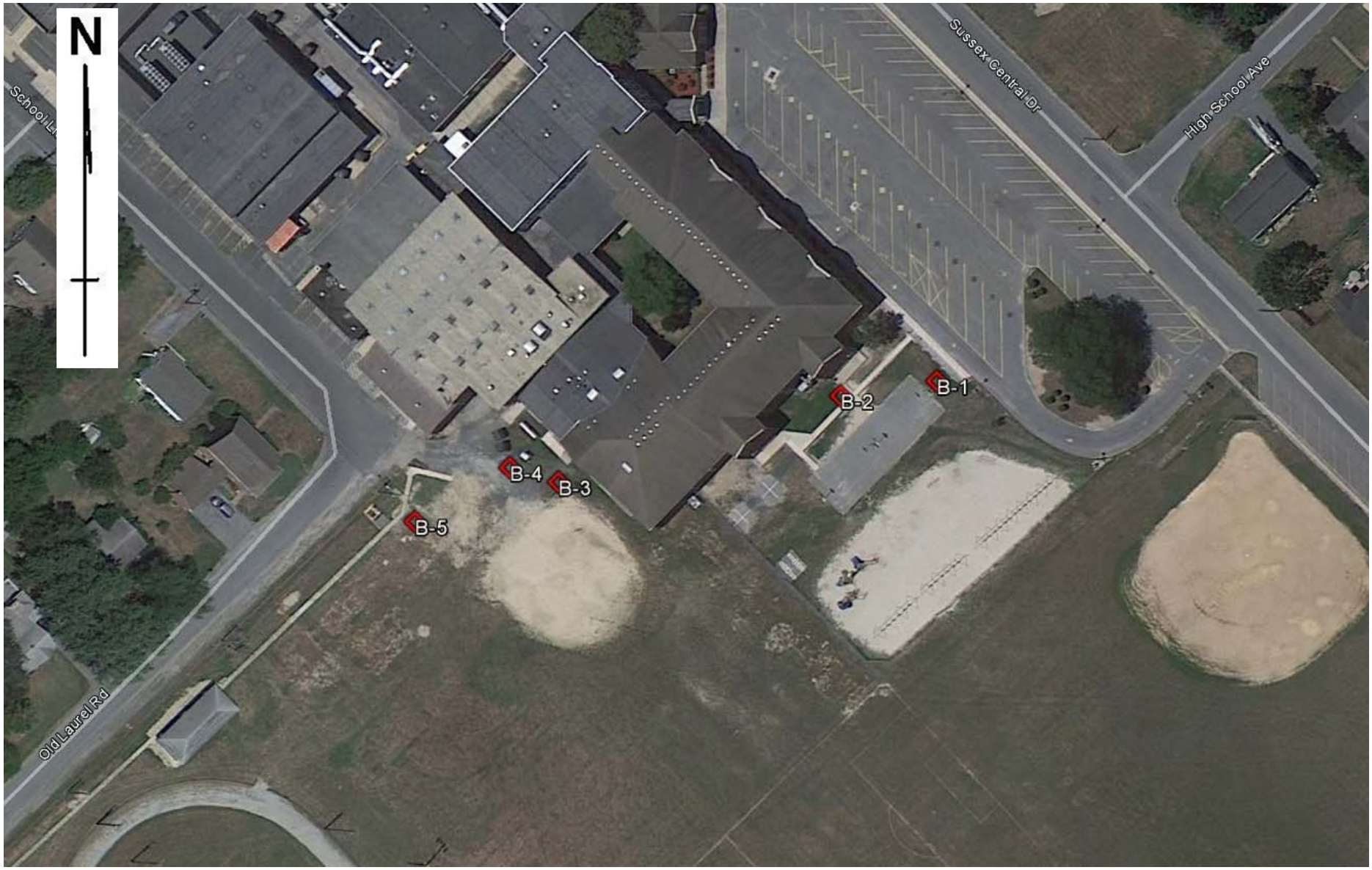

H I L L I S - C A R N E S		**BORING LOCATION PLAN**	**JOB No:**	D13110	**DESIGN BY:** Google
ENGINEERING ASSOCIATES, INC.		**FIGURE 2**	**DATE:**	12/19/2013	**DRAWN BY:** Google
1277 McD Drive	Dover, DE 19901	Georgetown Elementary School	**SCALE:**	NTS	
PHONE: (302) 744-9855	FAX: (302) 744-9160	Georgetown, Delaware	**PAGE:**	1	**CHECKED BY:** JMB

HILLIS-CARNES ENGINEERING ASSOCIATES, INC.

HILLIS - CARNES
ENGINEERING ASSOCIATES, INC.

RECORD OF SOIL EXPLORATION

Project Name: **Georgetown Elementary School Addition** | Boring No.: B-1
Location: Georgetown, DE | Job #: D13110

SAMPLER

Datum		Hammer Wt.	140 lbs.	Hole Diameter	6	Foreman	K Hastings
Surf. Elev.	e.g. Ft.	Hammer Drop	30 in.	Rock Core Diameter		Classified By	J Boehm
Date Started	12/3/2013	Pipe Size	2 in.	Boring Method	HSA	Date Completed	12/3/2013

Elevation/ Depth	SOIL SYMBOLS/ SAMPLE CONDITIONS	Description	Boring and Sampling Notes	Rec.	NM %	SPT Blows	SPT Blows/Foot N	SPT Blows/Foot Curve (10 30 50)
0	D	Light brown, moist, loose, fine to medium SAND, little silt (SM)	Approximately 8 inches of organic bearing (topsoil) at surface.	16		2-2-3	5	
	D	Light brown, moist, loose, fine to medium clayey SAND (SC)		16		2-3-4	7	
5	D	White, moist to saturated, loose, fine to coarse SAND, some silt (SM)		18		3-4-4	8	
	D		Water on rods 8 feet below existing grade.	18		2-3-4	7	
10	D	White to tan, saturated, very loose, fine to coarse SAND, little silt (SM)		18		2-2-2	4	
15	D			18		1-1-1	2	
	D	White, saturated, loose, fine to coarse SAND, little silt (SM)		18		4-3-4	7	
20		Boring terminated 20 feet below existing grade.						
25								
30								

GROUND WATER		CAVE IN DEPTH	
AT COMPLETION	5.75 ft.	6.5 ft.	
AFTER 24 HRS.	ft.	ft.	
AFTER ___ HRS.	ft.	ft.	

SAMPLER TYPE
DRIVEN SPLIT SPOON UNLESS OTHERWISE
PT - PRESSED SHELBY TUBE
CA - CONTINUOUS FLIGHT AUGER
RC - ROCK CORE

SAMPLE CONDITIONS
D - DISINTEGRATED
I - INTACT
U - UNDISTURBED
L - LOST

BORING METHOD
HSA - HOLLOW STEM AUGERS
CFA - CONTINUOUS FLIGHT AUGERS
DC - DRIVING CASING
MD - MUD DRILLING

STANDARD PENETRATION TEST-DRIVING 2" O.D. SAMPLER 1' WITH 140# HAMMER FALLING 30": COUNT MADE AT 6" INTERVALS.

HILLIS - CARNES
ENGINEERING ASSOCIATES, INC.

RECORD OF SOIL EXPLORATION

Project Name: **Georgetown Elementary School Addition** | Boring No.: B-2
Location: Georgetown, DE | Job #: D13110

SAMPLER

Datum		Hammer Wt.	140 lbs.	Hole Diameter	6	Foreman	K Hastings
Surf. Elev.	e.g. Ft.	Hammer Drop	30 in.	Rock Core Diameter		Classified By	J Boehm
Date Started	12/3/2013	Pipe Size	2 in.	Boring Method	HSA	Date Completed	12/3/2013

Elevation/ Depth	SOIL SYMBOLS/ SAMPLE CONDITIONS	Description	Boring and Sampling Notes	Rec.	NM %	SPT Blows	SPT Blows/Foot N	SPT Blows/Foot Curve (10 30 50)
0	D	Light brown, moist, medium dense, fine to medium SAND, some clay (SC)	Approximately 10 inches of organic bearing soil (topsoil) at surface.	16		2-5-6	11	
	D	Light brown, moist, loose, fine to medium clayey SAND (SC)		18		2-2-3	5	
5	D	White, moist, meduim dense, fine to coarse SAND, some silt (SM)		18		5-6-6	12	
	D	White, saturated, loose, fine to coarse SAND, little silt (SM)	Water on rods 8 feet below existing grade.	18		2-3-3	6	
10	D	White to tan, saturated, loose to very loose, fine to medium SAND, trace silt (SP-SM)		18		2-3-5	8	
15	D			18		2-1-2	3	
	D			18		2-4-5	9	
20		Boring terminated 20 feet below existing grade.						
25								
30								

SAMPLER TYPE	SAMPLE CONDITIONS		GROUND WATER	CAVE IN DEPTH	BORING METHOD
DRIVEN SPLIT SPOON UNLESS OTHERWISE	D - DISINTEGRATED	AT COMPLETION	- ft.	5.5 ft.	HSA - HOLLOW STEM AUGERS
PT - PRESSED SHELBY TUBE	I - INTACT	AFTER 24 HRS.	ft.	ft.	CFA - CONTINUOUS FLIGHT AUGERS
CA - CONTINUOUS FLIGHT AUGER	U - UNDISTURBED	AFTER ___ HRS.	ft.	ft.	DC - DRIVING CASING
RC - ROCK CORE	L - LOST				MD - MUD DRILLING

STANDARD PENETRATION TEST-DRIVING 2" O.D. SAMPLER 1' WITH 140# HAMMER FALLING 30": COUNT MADE AT 6" INTERVALS.

HILLIS - CARNES
ENGINEERING ASSOCIATES, INC.

RECORD OF SOIL EXPLORATION

Project Name: **Georgetown Elementary School Addition** | Boring No.: B-3
Location: Georgetown, DE | Job #: D13110

SAMPLER

Datum		Hammer Wt.	140 lbs.	Hole Diameter	6	Foreman	K Hastings
Surf. Elev.	e.g. Ft.	Hammer Drop	30 in.	Rock Core Diameter		Classified By	J Boehm
Date Started	12/3/2013	Pipe Size	2 in.	Boring Method	HSA	Date Completed	12/3/2013

Elevation/ Depth	SOIL SYMBOLS/ SAMPLE CONDITIONS	Description	Boring and Sampling Notes	Rec.	NM %	SPT Blows	SPT Blows/Foot N	SPT Blows/Foot Curve (10 30 50)
0	D	Light brown, moist, medium dense, fine to medium SAND, little silt (SM)	Approximately 6 inches of organic bearing soil (topsoil) at surface.	16		3-5-7	12	
	D	Light brown, moist, medium dense, fine to medium clayey SAND (SC)		18		1-4-7	11	
5	D	Brown and gray, mottled, moist, medium dense, fine to medium clayey SAND (SC)		18		3-5-6	11	
	D	Tan, saturated, loose to very loose, fine to coarse SAND, some silt (SM)	Water on rods 8 feet below existing grade.	18		3-3-3	6	
10	D			18		2-2-3	5	
15	D			18		2-2-1	3	
	D	White, saturated, loose, fine to coarse SAND, little silt (SM)		18		2-4-6	10	
20		Boring terminated 20 feet below existing grade.						
25								
30								

			GROUND WATER	CAVE IN DEPTH	
SAMPLER TYPE	**SAMPLE CONDITIONS**				**BORING METHOD**
DRIVEN SPLIT SPOON UNLESS OTHERWISE	D - DISINTEGRATED	AT COMPLETION	- ft.	4 ft.	HSA - HOLLOW STEM AUGERS
PT - PRESSED SHELBY TUBE	I - INTACT	AFTER 24 HRS.	ft.	ft.	CFA - CONTINUOUS FLIGHT AUGERS
CA - CONTINUOUS FLIGHT AUGER	U - UNDISTURBED	AFTER ___ HRS.	ft.	ft.	DC - DRIVING CASING
RC - ROCK CORE	L - LOST				MD - MUD DRILLING

STANDARD PENETRATION TEST-DRIVING 2" O.D. SAMPLER 1' WITH 140# HAMMER FALLING 30": COUNT MADE AT 6" INTERVALS.

HILLIS - CARNES
ENGINEERING ASSOCIATES, INC.

RECORD OF SOIL EXPLORATION

Project Name: **Georgetown Elementary School Addition** | Boring No.: B-4
Location: Georgetown, DE | Job #: D13110

SAMPLER

Datum		Hammer Wt.	140 lbs.	Hole Diameter	6	Foreman	K Hastings
Surf. Elev.	e.g. Ft.	Hammer Drop	30 in.	Rock Core Diameter		Classified By	J Boehm
Date Started	12/3/2013	Pipe Size	2 in.	Boring Method	HSA	Date Completed	12/3/2013

Elevation/ Depth	SOIL SYMBOLS/ SAMPLE CONDITIONS	Description	Boring and Sampling Notes	Rec.	NM %	SPT Blows	SPT Blows/Foot N	SPT Blows/Foot Curve (10 30 50)
0	D	Light brown, moist, medium dense, fine to medium SAND, some silt (SM)	Approximately 4 inches of crushed stone at suface.	16		5-7-9	16	
	D	Light brown, mottled, medium dense, fine to medium clayey SAND (SC)		18		2-5-7	12	
5	D			18		3-5-7	12	
	D	White, saturated, loose, fine to coarse SAND, some silt (SM)	Water on rods 8 feet below existing grade.	18		2-3-4	7	
10	D	White, saturated, loose, fine to medium SAND, trace silt (SP-SM)		18		2-3-3	6	
15	D			18		2-3-4	7	
	D			18		2-4-5	9	
20		Boring terminated 20 feet below existing grade.						
25								
30								

SAMPLER TYPE	SAMPLE CONDITIONS		GROUND WATER	CAVE IN DEPTH	BORING METHOD
DRIVEN SPLIT SPOON UNLESS OTHERWISE	D - DISINTEGRATED	AT COMPLETION	- ft.	4.5 ft.	HSA - HOLLOW STEM AUGERS
PT - PRESSED SHELBY TUBE	I - INTACT	AFTER 24 HRS.	ft.	ft.	CFA - CONTINUOUS FLIGHT AUGERS
CA - CONTINUOUS FLIGHT AUGER	U - UNDISTURBED	AFTER ___ HRS.	ft.	ft.	DC - DRIVING CASING
RC - ROCK CORE	L - LOST				MD - MUD DRILLING

STANDARD PENETRATION TEST-DRIVING 2" O.D. SAMPLER 1' WITH 140# HAMMER FALLING 30": COUNT MADE AT 6" INTERVALS.

HILLIS - CARNES
ENGINEERING ASSOCIATES, INC.

RECORD OF SOIL EXPLORATION

Project Name: **Georgetown Elementary School Addition** | Boring No.: B-5
Location: Georgetown, DE | Job #: D13110

SAMPLER

Datum		Hammer Wt.	140 lbs.	Hole Diameter	6	Foreman	K Hastings
Surf. Elev.	e.g. Ft.	Hammer Drop	30 in.	Rock Core Diameter		Classified By	J Boehm
Date Started	12/3/2013	Pipe Size	2 in.	Boring Method	HSA	Date Completed	12/3/2013

Elevation/ Depth	SOIL SYMBOLS/ SAMPLE CONDITIONS	Description	Boring and Sampling Notes	Rec.	NM %	SPT Blows	SPT Blows/Foot N	SPT Blows/Foot Curve (10 30 50)
0	D	Light brown, moist, medium dense, fine to medium SAND, some silt (SM) (Sandy Loam)	Approximately 6 inches of organic bearing soil (topsoil) at surface.	16		2-5-7	12	
	I	Light brown, moist, medium dense, fine to medium clayey SAND (SC) (Clay Loam)		18		3-5-6	11	
5	D	White, wet, loose, fine to medium silty SAND (SM) (Loam)		18		2-3-6	9	
	D	White, saturated, loose, fine to coarse SAND, little silt (SM) (Sandy Loam)	Water on rods 8 feet below existing grade.	18		2-3-5	8	
10	D	White to tan, saturated, loose, fine to coarse SAND, trace silt (SP-SM) (Loamy Sand)		18		3-4-4	8	
	D			18		3-5-5	10	
15		Boring terminated 15 feet below existing grade.						
20								
25								
30								

SAMPLER TYPE	SAMPLE CONDITIONS		GROUND WATER	CAVE IN DEPTH	BORING METHOD
DRIVEN SPLIT SPOON UNLESS OTHERWISE	D - DISINTEGRATED	AT COMPLETION	- ft.	4 ft.	HSA - HOLLOW STEM AUGERS
PT - PRESSED SHELBY TUBE	I - INTACT	AFTER 24 HRS.	ft.	ft.	CFA - CONTINUOUS FLIGHT AUGERS
CA - CONTINUOUS FLIGHT AUGER	U - UNDISTURBED	AFTER ___ HRS.	ft.	ft.	DC - DRIVING CASING
RC - ROCK CORE	L - LOST				MD - MUD DRILLING

STANDARD PENETRATION TEST-DRIVING 2" O.D. SAMPLER 1' WITH 140# HAMMER FALLING 30": COUNT MADE AT 6" INTERVALS.

HILLIS-CARNES ENGINEERING ASSOCIATES, Inc.

1277 McD Drive - Dover, Delaware 19901

Phone: 302.744.9855 • Fax: 302.744.9160

Description of Soils – per ASTM D2487

Major Component	Component Type	Component Description	Symbol	Group Name
Coarse-Grained Soils, More than 50% is retained on the No. 200 sieve	**Gravels** – More than 50% of the coarse fraction is retained on the No. 4 sieve. Coarse = 1" to 3" Medium = ½" to 1" Fine = ¼" to ½"	Clean Gravels <5% Passing No. 200 sieve	**GW**	Well Graded Gravel
			GP	Poorly Graded Gravel
		Gravels with fines, >12% Passing the No. 200 sieve	**GM**	Silty Gravel
			GC	Clayey Gravel
	Sands – More than 50% of the coarse fraction passes the No. 4 sieve. Coarse = No.10 to No.4 Medium = No. 10 to No. 40 Fine = No. 40 to No. 200	Clean Sands <5% Passing No. 200 sieve	**SW**	Well Graded Sand
			SP	Poorly Graded Sand
		Sands with fines, >12% Passing the No. 200 sieve	**SM**	Silty Sand
			SC	Clayey Sand
Fine Grained Soils, More than 50% passes the No. 200 sieve	Silts and Clays Liquid Limit is less than 50 Low to medium plasticity	Inorganic	**ML**	Silt
			CL	Lean Clay
		Organic	**OL**	Organic silt
				Organic Clay
	Silts and Clays Liquid Limit of 50 or greater Medium to high plasticity	Inorganic	**MH**	Elastic Silt
			CH	Fat Clay
		Organic	**OH**	Organic Silt
				Organic Clay
Highly Organic Soils	Primarily Organic matter, dark color, organic odor		**PT**	Peat

Proportions of Soil Components

Component Form	Description	Approximate percent by weight
Noun	Sand, Gravel, Silt, Clay, etc.	50% or more
Adjective	Sandy, silty, clayey, etc.	35% to 49%
Some	Some sand, some silt, etc.	12% to 34%
Trace	Trace sand, trace mica, etc.	1% to 11%
With	With sand, with mica, etc.	Presence only

Particle Size Identification

Particle Size	Particle dimension
Boulder	12" diameter or more
Cobble	3" to 12" diameter
Gravel	¼" to 3" diameter
Sand	0.005" to ¼" diameter
Silt/Clay (fines)	Cannot see particle

Cohesive Soils

Field Description	No. of SPT Blows/ft	Consistency
Easily Molded in Hands	0 – 3	Very Soft
Easily penetrated several inches by thumb	4 – 5	Soft
Penetrated by thumb with moderate effort	6 – 10	Medium Stiff
Penetrated by thumb with great effort	11 – 30	Stiff
Indented by thumb only with great effort	Greater than 30	Hard

Granular Soils

No. of SPT Blows/ft	Relative Density
0 – 4	Very Loose
5 – 10	Loose
11 – 30	Medium Dense
31 – 50	Dense
Greater than 50	Very Dense

Other Definitions**:**

- **Fill:** Encountered soils that were placed by man. Fill soils may be controlled (engineered structural fill) or uncontrolled fills that may contain rubble and/or debris.
- **Saprolite**: Soil material derived from the in-place chemical and physical weathering of the parent rock material. May contain relic structure. Also called residual soils. Occurs in Piedmont soils, found west of the fall line.
- **Disintegrated Roc**k: Residual soil material with rock-like properties, very dense, N = 60 to 51/0".
- **Karst:** Descriptive term which denotes the potential for solutioning of the limestone rock and the development of sinkholes.
- **Alluvium:** Recently deposited soils placed by water action, typically stream or river floodplain soils.
- **Groundwater Level**: Depth within borehole where water is encountered either during drilling, or after a set period of time to allow groundwater conditions to reach equilibrium.
- **Caved Depth:** Depth at which borehole collapsed after removal of augers/casing. Indicative of loose soils and/or groundwater conditions**.**

Corporate Headquarters
24 Hagerty Blvd., Suite 11
West Chester, PA 19382

SoftDig.
Subsurface Utility Engineers

(763-8344)
Fax No.: (610) 696-7864

Vacuum excavation Data Sheet
☒ ENGLISH UNITS ☐ METRIC UNITS

SoftDig® Project #: 143720 Test Hole #: 1 Client: INDIAN RIVER Date: 11/19/14
One-Call Permit #: 143150144 SUE Analyst: J. HUGHES Truck #: S-149
City / County/State: GEORGETOWN / SUSSEX / DE Road:
General Location: CAFETERIA

Actual Size, Color, Material, Type of Utility: 24" WIDE CONCRETE COVER (ELECT.)
Utility Owner: Designation Color: RED
Observed Utility Condition: Good X Poor ___ Other:
Test Hole marked by: PK Nail ___ Hub X Other:
Portion of Utility Exposed: Top X Half ___ Side ___ Full ___

1. Reference Mark Elevation: 100.45
2. Utility Top Elevation: 98.07
3. Utility Bottom Elevation (if applicable): 97.42
4. Width (if applicable): 24"
5. Utility Top Depth from Reference: 2.36'
6. Utility Bottom Depth from Reference (if applicable): 3.03'

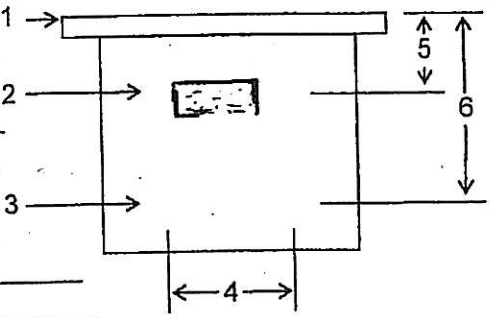

Surface Covering Type: Asphalt ___ Concrete ___ Soil X Surface Covering Depth:
Generalized Soil Profile: Select Fill ___ Rock ___ Sand X Clay ___ Other:
1.) Bench Mark Elev.: 100.00 Description: CORNER OF CONCRETE PAD FOR TRANFORMERS
2.) Bench Mark Elev.: — Description: —
Excavated Location Station: — Offset —

REMARKS: PHOTO:

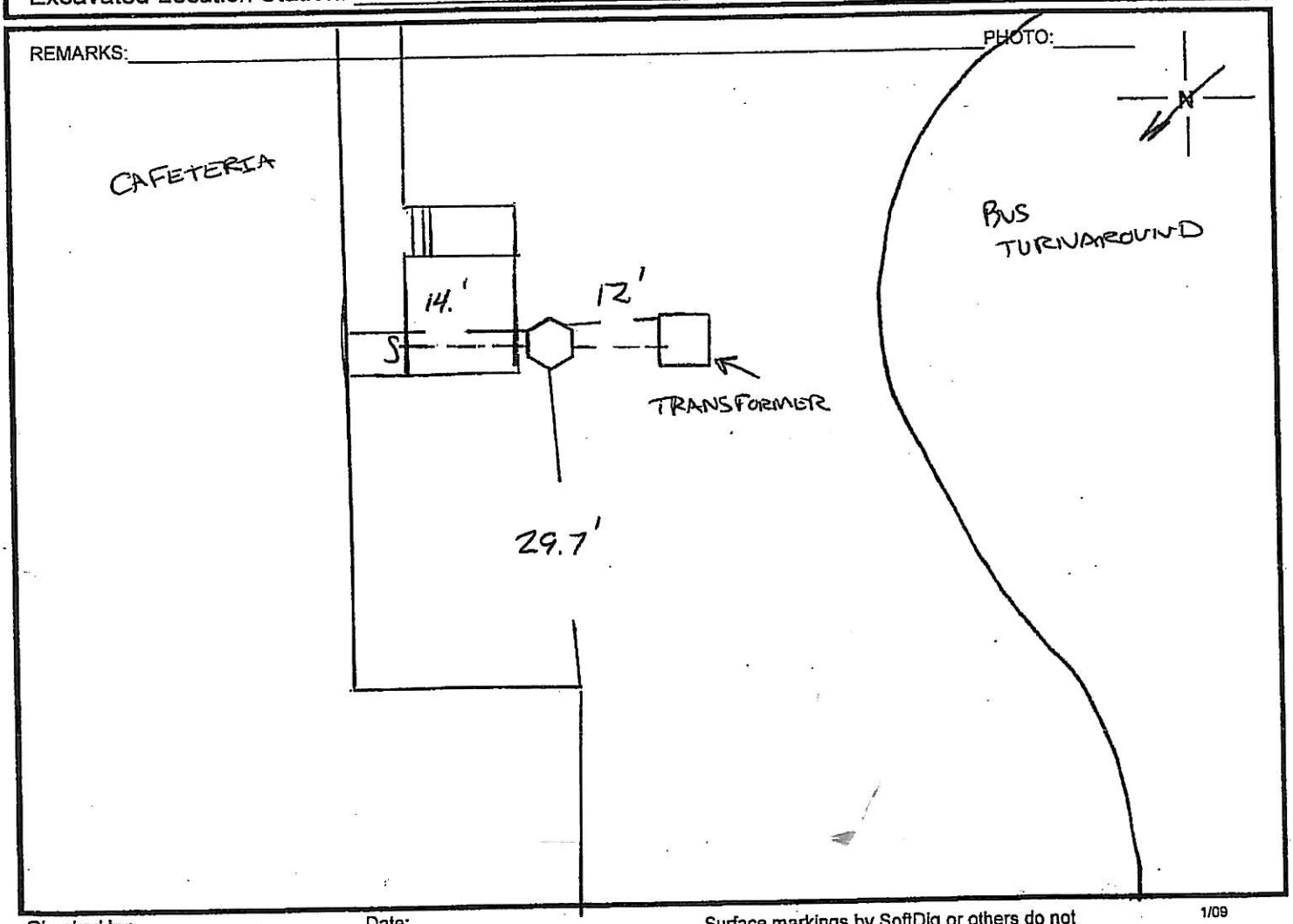

Checked by: Date:

Surface markings by SoftDig or others do not necessarily indicate the true location or depth.

1/09

Corporate Headquarters
24 Hagerty Blvd., Suite 11
West Chester, PA 19382

SoftDig
Subsurface Utility Engineers

(763-8344)
Fax No.: (610) 696-7864

Vacuum excavation Data Sheet
☒ ENGLISH UNITS ☐ METRIC UNITS

SoftDig® Project #: 143720 Test Hole #: 2 Client: INDIAN RIVER SD Date: 11/19/14
One-Call Permit #: 143150144 SUE Analyst: J. HUGHES Truck #: S-149
City / County/State: GEORGETOWN / SUSSEX / DE Road:
General Location: CAFETERIA

Actual Size, Color, Material, Type of Utility: 24" WIDE CONCRETE COVER (ELECT.)
Utility Owner: Designation Color: RED
Observed Utility Condition: Good X Poor ___ Other:
Test Hole marked by: PK Nail ___ Hub X Other:
Portion of Utility Exposed: Top X Half ___ Side ___ Full ___

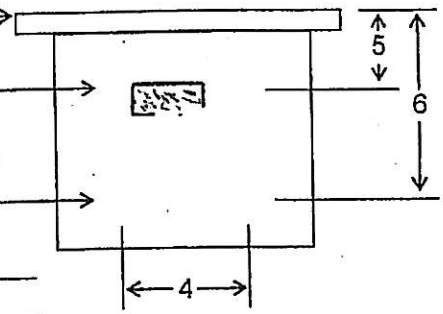

1. Reference Mark Elevation: 100.07
2. Utility Top Elevation: 97.50
3. Utility Bottom Elevation (if applicable): 96.71
4. Width (if applicable): 24"
5. Utility Top Depth from Reference: 2.58
6. Utility Bottom Depth from Reference (if applicable): 3.36

Surface Covering Type: Asphalt ___ Concrete ___ Soil X Surface Covering Depth:
Generalized Soil Profile: Select Fill ___ Rock ___ Sand X Clay ___ Other:
1.) Bench Mark Elev.: 100.00 Description: CORNER OF CONCRETE PAD FOR TRANSFORMERS
2.) Bench Mark Elev.: — Description: —
Excavated Location Station: — Offset —

REMARKS: PHOTO:

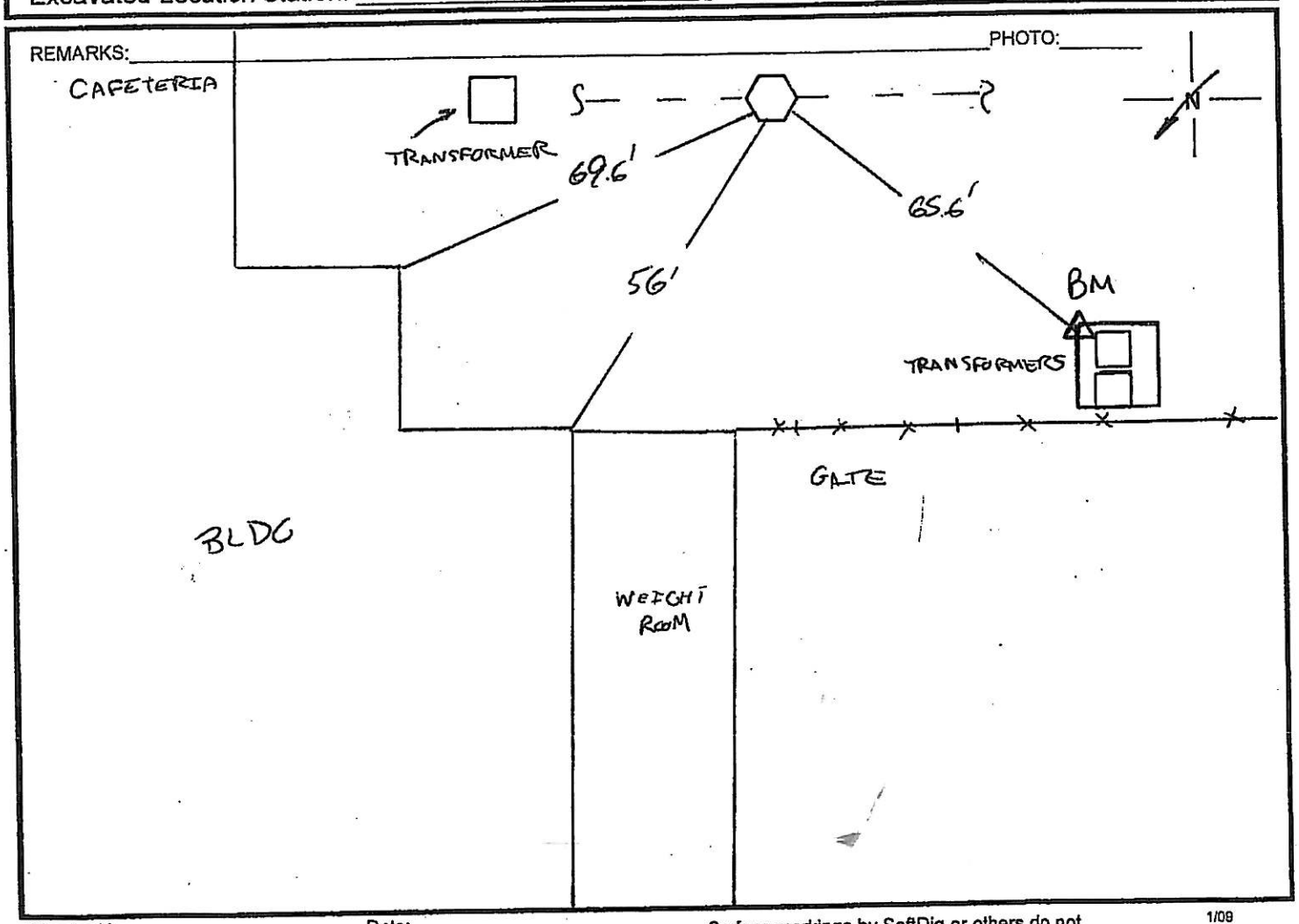

Checked by: Date:

Surface markings by SoftDig or others do not necessarily indicate the true location or depth.

1/09

Corporate Headquarters
24 Hagerty Blvd., Suite 11
West Chester, PA 19382

SoftDig.
Subsurface Utility Engineers

(763-8344)
Fax No.: (610) 696-7864

Vacuum excavation Data Sheet
☐ ENGLISH UNITS ☐ METRIC UNITS

SoftDig® Project #: 143720 Test Hole #: 3 Client: INDIAN RIVER SD Date: 11/19/14
One-Call Permit #: 143150144 SUE Analyst: J. HUGHES Truck #: S-149
City / County/State: GEORGETOWN / SUSSEX / DE Road:
General Location: CAFETERIA

Actual Size, Color, Material, Type of Utility: 8" PLASTIC PIPE (WATER)
Utility Owner: CITY Designation Color: BLUE
Observed Utility Condition: Good X Poor ___ Other:
Test Hole marked by: PK Nail ___ Hub X Other:
Portion of Utility Exposed: Top X Half ___ Side ___ Full ___

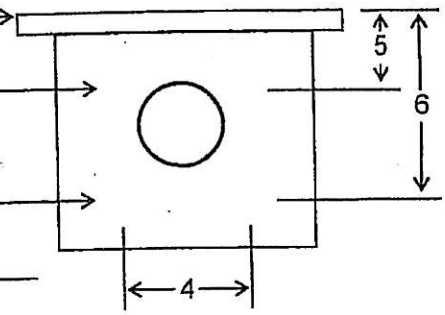

1. Reference Mark Elevation: 100.02
2. Utility Top Elevation: 96.67
3. Utility Bottom Elevation (if applicable): —
4. Width (if applicable): —
5. Utility Top Depth from Reference: 3.35
6. Utility Bottom Depth from Reference (if applicable): —

Surface Covering Type: Asphalt ___ Concrete ___ Soil X Surface Covering Depth:
Generalized Soil Profile: Select Fill ___ Rock ___ Sand X Clay ___ Other:
1.) Bench Mark Elev.: 100.00 Description: CORNER OF CONCRETE PAD FOR TRANSFORMERS
2.) Bench Mark Elev.: — Description: —
Excavated Location Station: — Offset —

REMARKS: PHOTO:

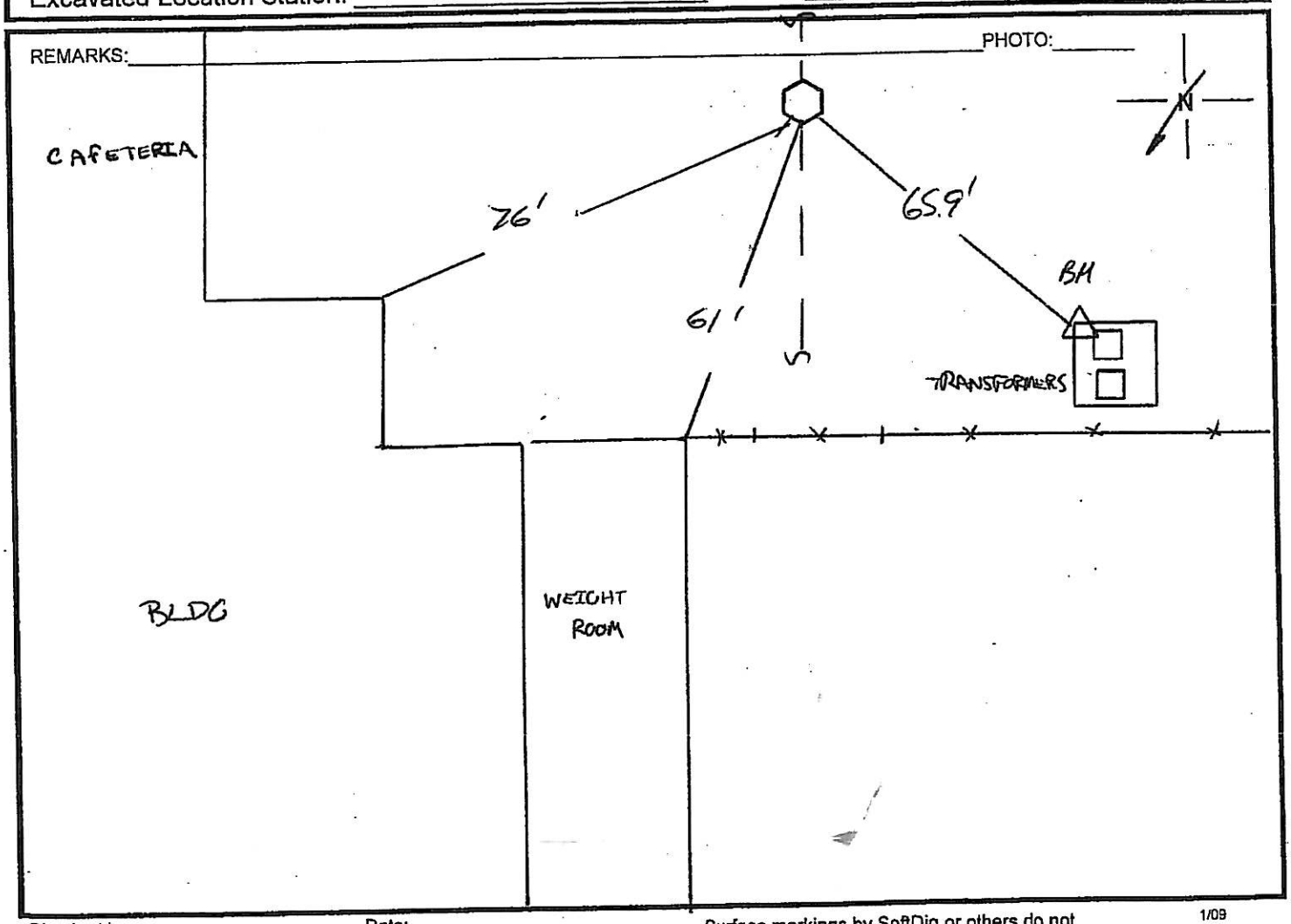

Checked by: Date:

Surface markings by SoftDig or others do not necessarily indicate the true location or depth.

1/09

• UTILITY SURFACE LOCATION SKETCH •

Pre-Surface Location Information

Intended construction in project limits: ____ Excavation____Trenching____Soil Borings/Wells____Other_____ Describe

Project limits defined by: ____Flagging____Paint____Sketch____Other_____ Describe

Utilities requested to be surface located in project limits: ____Water____Comm.____Gas____Elec.____CATV____San. Swr.____St. Swr.____Other_____

Utilities requested not to be surface located in project limits: _____

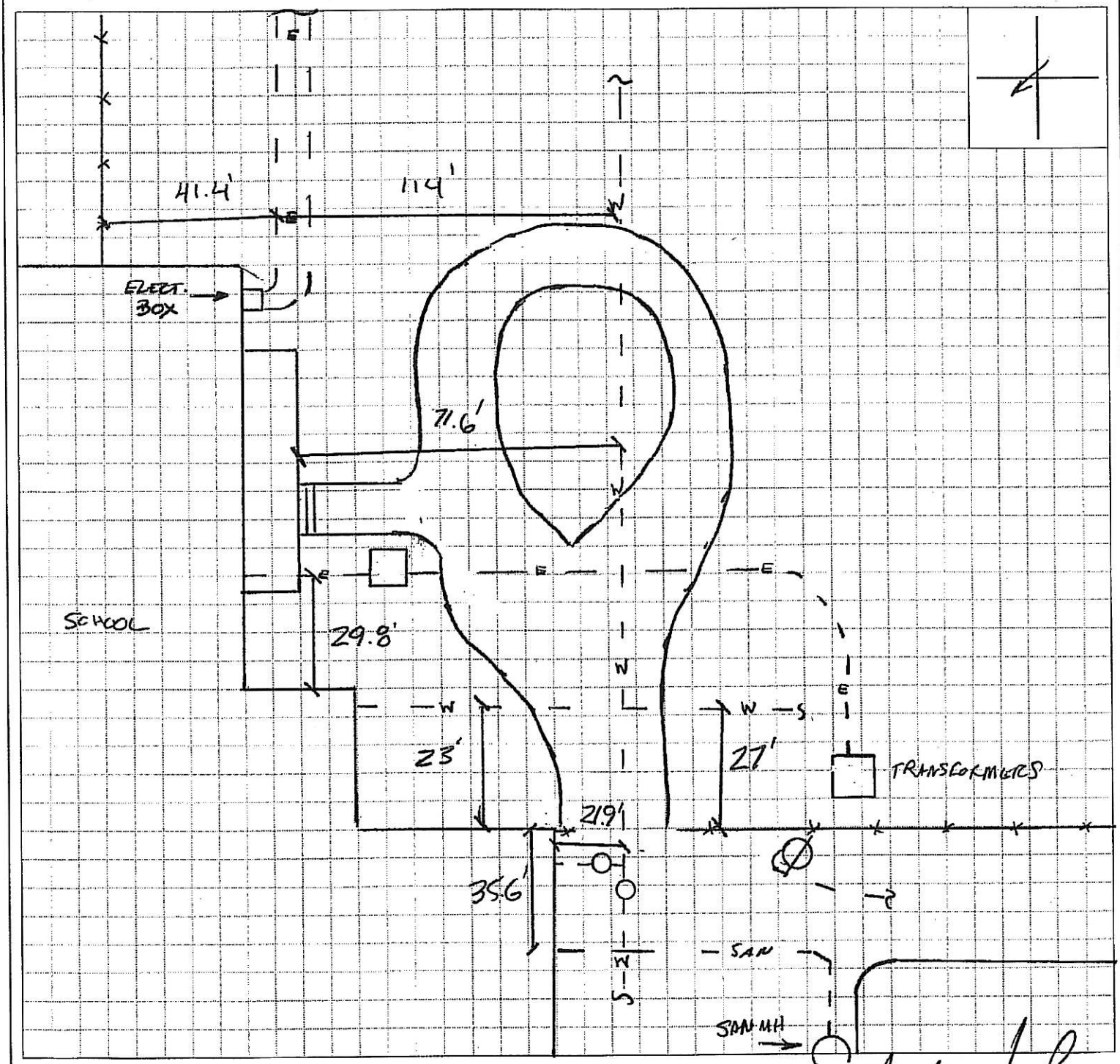

Notes:
- *SoftDig*® exercised its best professional expertise & geophysical prospecting techniques to designate subsurface utilities.
- *SoftDig*® does not guarantee that utilities marked constitute all utilities within the project area.
- Prior to actual construction, utilities must be subsurface located by *SoftDig*® at potential conflict points to avoid personal injury and/or property damage.

Locator's Signature: Austin Hugh

Client's Signature: _____

SoftDig. Corporate Headquarters West Chester, PA (877) SOFTDIG (877) 763-8344	Job# 143720	Date 11/18/14	Prepared by	Checked by
	Client INDIAN RIVER SCHOOL DIST.		Location GEORGETOWN MS/ES	

11/09

• UTILITY SURFACE LOCATION SKETCH •

Pre-Surface Location Information

Intended construction in project limits: ____ Excavation____Trenching____Soil Borings/Wells____Other_____ Describe

Project limits defined by: ____Flagging____Paint____Sketch____Other_____ Describe

Utilities requested to be surface located in project limits: ____Water____Comm.____Gas____Elec.____CATV____San. Swr.____St. Swr.____Other_____

Utilities requested not to be surface located in project limits: _____

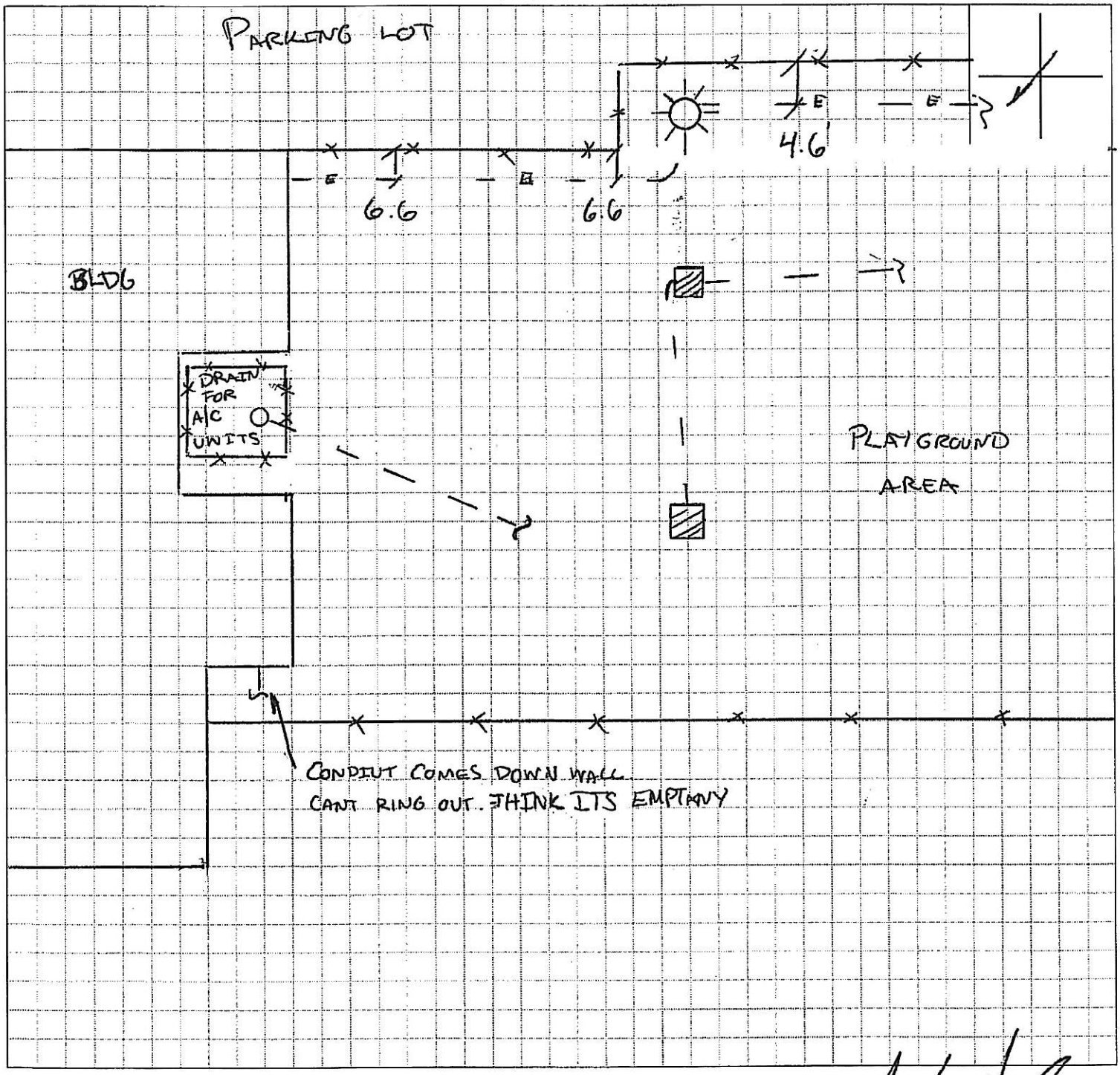

Notes:
- *SoftDig*® exercised its best professional expertise & geophysical prospecting techniques to designate subsurface utilities.
- *SoftDig*® does not guarantee that utilities marked constitute all utilities within the project area.
- Prior to actual construction, utilities must be subsurface located by *SoftDig*® at potential conflict points to avoid personal injury and/or property damage.

Locator's Signature: _____

Client's Signature: _____

SoftDig. Corporate Headquarters West Chester, PA (877) SOFTDIG (877) 763-8344	Job# 143720	Date 11/18/14	Prepared by	Checked by
	Client INDIAN RIVER SCHOOL DIST.	Location GEORGETOWN MS/ES		

11/09

A-01: Sitework

BID FORM

For Bids Due: _____ To: Indian River School District
31 Hosier Street
Selbyville, DE 19975

Name of Bidder: _____

Bidder Address: _____

_____

Contact Name: _____ E-Mail Address: _____

Delaware Business License No.: _____ Taxpayer ID No.: _____

(Other License Nos.): _____
(A copy of Bidder's Delaware Business License must be attached to this form.)

Phone No.: ( ) _____ - _____ Fax No.: ( ) _____ - _____

The undersigned, representing that he has read and understands the Bidding Documents and that this bid is made in accordance therewith, that he has visited the site and has familiarized himself with the local conditions under which the Work is to be performed, and that his bid is based upon the materials, systems and equipment described in the Bidding Documents without exception, hereby proposes and agrees to provide all labor, materials, plant, equipment, supplies, transport and other facilities required to execute the work described by the aforesaid documents for the lump sum itemized below:

$_____ ($_____)

ALTERNATES
Alternate prices conform to applicable project specification section. Refer to specifications for a complete description of the following Alternates. An "ADD" or "DEDUCT" amount is indicated by the crossed out part that does not apply.

A. Alternate No. 1: Additional striping of the front parking lot.
   1. Base Bid: Removal of striping in the existing northeast parking lot adjacent to the classroom additions according to Sheet C-101 of the contract documents. Striping of 18 parking spaces and pavement markings as shown on sheet C-201 of the contract documents.
   2. Alternate: Remove the remaining existing striping within the existing northeast parking lot adjacent to the classroom additions on sheet C-202 of the contract documents. Additional restriping of the spaces and pavement marking within the existing northeast parking lot as shown on sheet C-202 of the contract documents and not included in the base bid on sheet C-201 of the contract documents.

Add/Deduct_____($_____)

B. Alternate No. 2: Seal coat front parking lot

1. Base Bid: Removal of striping in the existing northeast parking lot adjacent to the classroom additions according to Sheet C-101 of the contract documents. Striping of 18 parking spaces and pavement markings as shown on sheet C-201 of the contract documents.
2. Alternate: Seal coating 46,610 sqft of the existing northeast parking lot as shown on sheet C-202 of the contract documents. Additional restriping of the spaces and pavement marking within the existing northeast parking lot as shown on sheet C-202 of the contract documents and not included in the base bid on sheet C-201 of the contract documents.

Add/Deduct_____($_____)

C. Alternate No. 3: Mill and overlay front parking lot

1. Base Bid: Removal of striping in the existing northeast parking lot adjacent to the classroom additions according to Sheet C-101 of the contract documents. Striping of 18 parking spaces and pavement markings as shown on sheet C-201 of the contract documents.
2. Alternate: Sawcut and rotomill 46,610 sqft of the existing northeast parking lot as shown on sheet C-202 of the contract documents. Additional restriping of the spaces and pavement marking within the existing northeast parking lot as shown on sheet C-202 of the contract documents and not included in the base bid on sheet C-201 of the contract documents.

Add/Deduct _____($_____)

D. Alternate No. 4: Multipurpose Room Finishes

1. Base Bid: At Multipurpose Room #132, existing finish flooring remain; patch and replace tiles at removed serving lines; and walls repainted, as indicated on Sheet.
2. Alternate: In lieu of base bid, provide new finish flooring and wall finishes as indicated on Sheets A107 and A601.

Add/Deduct _____($_____)

E. Alternate No. 5: Existing Stair Tread/Riser and Landing.

1. Base Bid: At Stair 127/218, repaint existing stair risers and VCT on treads and landing remains, as indicated on Sheet A103.
2. Alternate: In lieu of base bid, remove VCT at landing and provide rubber tile, and provide new rubber stair tread with integral risers as indicated on Sheet A103 and Section 096513.

Add/Deduct _____($_____)

UNIT PRICES

Unit prices conform to applicable project specification section. Refer to the specifications for a complete description of the following Unit Prices:

A. Unit Price No. 1: Removal of unsatisfactory soil and replacement and installation of satisfactory soil material.
   1. Description: Unsatisfactory soil excavation and disposal off site and replacement with satisfactory fill material or engineered fill from off site, as required, according to Section 312000 "Earth Moving."
   2. Unit of Measurement: Cubic yard of soil excavated, based on survey of volume removed.

   Add_____($_____) Deduct_____($_____)

B. Unit Price No. 2: Full depth pavement patch.
   1. Description: Saw cutting and removal of complete pavement section and unsuitable subsoils in the areas of pavement above and beyond the base bid as shown on the contract documents. Complete replacement and installation of pavement section in accordance with the "On-Site Pavement Section" detail provided on sheet C-902 of the contract documents.
   2. Unit of Measurement: Square foot of pavement area, based on survey of area removed.

   Add_____($_____) Deduct_____($_____)

C. Unit Price No. 3: 2" Mill and overlay.
   1. Description: Additional 2" milling of existing pavement by contactor and installation of a 2" overlay above and beyond the base bid as shown on the contract documents.
   2. Unit of Measurement: square foot of area to be milled, based on survey of area removed.

   Add_____($_____) Deduct_____($_____)

D. Unit Price No. 4: Seal Coating Pavement area.
   1. Description: Additional seal coating of parking surfaces and marking in addition to the area specified by the Alternate no. 2.
   2. Unit of Measurement: Square foot.

   Add_____($_____) Deduct_____($_____)

NOTE: The difference in price between Add and Deduct in the above Unit Prices should not exceed fifteen percent (15%).

I/We acknowledge Addendums numbered _____ and the price(s) submitted include any cost/schedule impact they may have.

This bid shall remain valid and cannot be withdrawn for sixty (60) days from the date of opening of bids, and the undersigned shall abide by the Bid Security forfeiture provisions. Bid Security is attached to this Bid (if required).

The Owner shall have the right to reject any or all bids, and to waive any informality or irregularity in any bid received.

This bid is based upon work being accomplished by the Sub-Contractors named on the list attached to this bid.

The undersigned represents and warrants that he has complied and shall comply with all requirements of local, state, and national laws; that no legal requirement has been or shall be violated in making or accepting this bid, in awarding the contract to him or in the prosecution of the work required; that the bid is legal and firm; that he has not, directly or indirectly, entered into any agreement, participated in any collusion, or otherwise taken action in restraint of free competitive bidding.

Upon receipt of written notice of the acceptance of this Bid, the Bidder shall, within twenty (20) calendar days, execute the agreement in the required form and deliver the Contract Bonds, and Insurance Certificates, required by the Contract Documents.

I am / We are an Individual / a Partnership / a Corporation

By _____ Trading as _____
(Individual's / General Partner's / Corporate Name)

_____
(State of Corporation)

Business Address:_____
_____
_____
_____

Witness: _____ By: _____
(Authorized Signature)

(SEAL) _____
(Title)

Date: _____

ATTACHMENTS

Sub-Contractor List
Non-Collusion Statement
Bid Bond
Consent of Surety
Delaware Business License
(Others as Required by Project Manuals)

SUBCONTRACTOR LIST

In accordance with Title 29, Chapter 6962 (d)(10)b Delaware Code, the following sub-contractor listing must accompany the bid submittal. The name and address of the sub-contractor must be listed for each category where the bidder intends to use a sub-contractor to perform that category of work. In order to provide full disclosure and acceptance of the bid by the Owner, **it is required that bidders list themselves as being the sub-contractor for all categories where he/she is qualified and intends to perform such work.**

Subcontractor Category	Subcontractor **Subcontractors tax payer ID #** **or Delaware Business license #**	Address (City & State)
1. Sitework	_____	_____

NON-COLLUSION STATEMENT

This is to certify that the undersigned bidder has neither directly nor indirectly, entered into any agreement, participated in any collusion or otherwise taken any action in restraint of free competitive bidding in connection with this proposal submitted this date _____.

All the terms and conditions of A-01, Sitework have been thoroughly examined and are understood.

NAME OF BIDDER: _____

AUTHORIZED REPRESENTATIVE (TYPED): _____

AUTHORIZED REPRESENTATIVE (SIGNATURE): _____

TITLE: _____

ADDRESS OF BIDDER: _____

_____

_____

PHONE NUMBER: _____

Sworn to and Subscribed before me this _____ day of _____ 20____.

My Commission expires _____. NOTARY PUBLIC _____.

THIS PAGE MUST BE SIGNED AND NOTARIZED FOR YOUR BID TO BE CONSIDERED.

BID BOND

TO ACCOMPANY PROPOSAL
(Not necessary if security is used)

KNOW ALL MEN BY THESE PRESENTS That: _____of _____in the County of _____ and State of _____ as Principal, and _____of _____in the County of _____ _____ and State of _____ as Surety, legally authorized to do business in the State of Delaware ('State"), are held and firmly unto the Indian River School District in the sum of _____ Dollars (S_____), or percent not to exceed _____ Dollars (S_____) of amount of bid on Contract No. _____ to be paid to the Indian River School District for the use and benefit of the Indian River School District for which payment well and truly to be made, we do bind ourselves, our and each of our heirs, executors, administrators, and successors, jointly and severally for and in the whole firmly by these presents.

NOW THE CONDITION OF THIS OBLIGATION IS SUCH That if the above bounden Principal who has submitted to the Indian River School District a certain proposal to enter into this contract for the furnishing of certain material and/or services within the State, shall be awarded this Contract, and if said Principal shall well and truly enter into and execute this Contract as may be required by the terms of this Contract and approved by the Indian River School District this Contract to be entered into within twenty days after the date of official notice of the award thereof in accordance with the terms of said proposal, then this obligation shall be void or else to be and remain in full force and virtue.

Sealed with _____seal and dated this____day of _____in the year of our Lord two thousand and _____(20__).

SEALED, AND DELIVERED IN THE PRESENCE OF

_____
Name of Bidder (Organization)

Corporate Seal

By:_____
Authorized Signature

Attest _____

_____
Title

_____
Name of Surety

Witness_____

_____

_____
Title

CONSENT OF SURETY

DATE_____

To: Indian River School District
31 Hosier Street
Selbyville, DE 19975

Gentlemen:

We, the _____

_____
(Surety Company's Address)

_____

a Surety Company authorized to do business in the State of Delaware hereby agrees that if

_____
(Contractor)

_____
(Address)

_____

is awarded the Contract No. _____

We will write the required Performance and/or Labor and Material Bond required by Paragraph 9 of the Instructions to Bidders.

_____
(Surety Company)

By _____
(Attorney-in-Fact)

END OF SECTION

Indian River School District
Referendum 2013
Georgetown Elementary School Classroom & Kitchen Additions

A-02: Concrete

BID FORM

For Bids Due: _____ To: Indian River School District
31 Hosier Street
Selbyville, DE 19975

Name of Bidder: _____

Bidder Address: _____

_____

Contact Name: _____ E-Mail Address: _____

Delaware Business License No.:_____ Taxpayer ID No.: _____

(Other License Nos.): _____
(A copy of Bidder's Delaware Business License must be attached to this form.)

Phone No.: ( ) _____ - _____ Fax No.: ( ) _____ - _____

The undersigned, representing that he has read and understands the Bidding Documents and that this bid is made in accordance therewith, that he has visited the site and has familiarized himself with the local conditions under which the Work is to be performed, and that his bid is based upon the materials, systems and equipment described in the Bidding Documents without exception, hereby proposes and agrees to provide all labor, materials, plant, equipment, supplies, transport and other facilities required to execute the work described by the aforesaid documents for the lump sum itemized below:

$_____ ($_____)

ALTERNATES
Alternate prices conform to applicable project specification section. Refer to specifications for a complete description of the following Alternates. An "ADD" or "DEDUCT" amount is indicated by the crossed out part that does not apply.

A. Alternate No. 1: Additional striping of the front parking lot.
   1. Base Bid: Removal of striping in the existing northeast parking lot adjacent to the classroom additions according to Sheet C-101 of the contract documents. Striping of 18 parking spaces and pavement markings as shown on sheet C-201 of the contract documents.
   2. Alternate: Remove the remaining existing striping within the existing northeast parking lot adjacent to the classroom additions on sheet C-202 of the contract documents. Additional restriping of the spaces and pavement marking within the existing northeast parking lot as shown on sheet C-202 of the contract documents and not included in the base bid on sheet C-201 of the contract documents.

Add/Deduct_____($_____)

B. Alternate No. 2: Seal coat front parking lot

1. Base Bid: Removal of striping in the existing northeast parking lot adjacent to the classroom additions according to Sheet C-101 of the contract documents. Striping of 18 parking spaces and pavement markings as shown on sheet C-201 of the contract documents.
2. Alternate: Seal coating 46,610 sqft of the existing northeast parking lot as shown on sheet C-202 of the contract documents. Additional restriping of the spaces and pavement marking within the existing northeast parking lot as shown on sheet C-202 of the contract documents and not included in the base bid on sheet C-201 of the contract documents.

Add/Deduct_____($_____)

C. Alternate No. 3: Mill and overlay front parking lot

1. Base Bid: Removal of striping in the existing northeast parking lot adjacent to the classroom additions according to Sheet C-101 of the contract documents. Striping of 18 parking spaces and pavement markings as shown on sheet C-201 of the contract documents.
2. Alternate: Sawcut and rotomill 46,610 sqft of the existing northeast parking lot as shown on sheet C-202 of the contract documents. Additional restriping of the spaces and pavement marking within the existing northeast parking lot as shown on sheet C-202 of the contract documents and not included in the base bid on sheet C-201 of the contract documents.

Add/Deduct _____($_____)

D. Alternate No. 4: Multipurpose Room Finishes

1. Base Bid: At Multipurpose Room #132, existing finish flooring remain; patch and replace tiles at removed serving lines; and walls repainted, as indicated on Sheet.
2. Alternate: In lieu of base bid, provide new finish flooring and wall finishes as indicated on Sheets A107 and A601.

Add/Deduct _____($_____)

E. Alternate No. 5: Existing Stair Tread/Riser and Landing.

1. Base Bid: At Stair 127/218, repaint existing stair risers and VCT on treads and landing remains, as indicated on Sheet A103.
2. Alternate: In lieu of base bid, remove VCT at landing and provide rubber tile, and provide new rubber stair tread with integral risers as indicated on Sheet A103 and Section 096513.

Add/Deduct _____($_____)

UNIT PRICES

Unit prices conform to applicable project specification section. Refer to the specifications for a complete description of the following Unit Prices:

A. Unit Price No. 1: Removal of unsatisfactory soil and replacement and installation of satisfactory soil material.
   1. Description: Unsatisfactory soil excavation and disposal off site and replacement with satisfactory fill material or engineered fill from off site, as required, according to Section 312000 "Earth Moving."
   2. Unit of Measurement: Cubic yard of soil excavated, based on survey of volume removed.

   Add_____($_____) Deduct_____($_____)

B. Unit Price No. 2: Full depth pavement patch.
   1. Description: Saw cutting and removal of complete pavement section and unsuitable subsoils in the areas of pavement above and beyond the base bid as shown on the contract documents. Complete replacement and installation of pavement section in accordance with the "On-Site Pavement Section" detail provided on sheet C-902 of the contract documents.
   2. Unit of Measurement: Square foot of pavement area, based on survey of area removed.

   Add_____($_____) Deduct_____($_____)

C. Unit Price No. 3: 2" Mill and overlay.
   1. Description: Additional 2" milling of existing pavement by contactor and installation of a 2" overlay above and beyond the base bid as shown on the contract documents.
   2. Unit of Measurement: square foot of area to be milled, based on survey of area removed.

   Add_____($_____) Deduct_____($_____)

D. Unit Price No. 4: Seal Coating Pavement area.
   1. Description: Additional seal coating of parking surfaces and marking in addition to the area specified by the Alternate no. 2.
   2. Unit of Measurement: Square foot.

   Add_____($_____) Deduct_____($_____)

NOTE: The difference in price between Add and Deduct in the above Unit Prices should not exceed fifteen percent (15%).

I/We acknowledge Addendums numbered _____ and the price(s) submitted include any cost/schedule impact they may have.

This bid shall remain valid and cannot be withdrawn for sixty (60) days from the date of opening of bids, and the undersigned shall abide by the Bid Security forfeiture provisions. Bid Security is attached to this Bid (if required).

The Owner shall have the right to reject any or all bids, and to waive any informality or irregularity in any bid received.

This bid is based upon work being accomplished by the Sub-Contractors named on the list attached to this bid.

The undersigned represents and warrants that he has complied and shall comply with all requirements of local, state, and national laws; that no legal requirement has been or shall be violated in making or accepting this bid, in awarding the contract to him or in the prosecution of the work required; that the bid is legal and firm; that he has not, directly or indirectly, entered into any agreement, participated in any collusion, or otherwise taken action in restraint of free competitive bidding.

Upon receipt of written notice of the acceptance of this Bid, the Bidder shall, within twenty (20) calendar days, execute the agreement in the required form and deliver the Contract Bonds, and Insurance Certificates, required by the Contract Documents.

I am / We are an Individual / a Partnership / a Corporation

By _____ Trading as _____
(Individual's / General Partner's / Corporate Name)

_____
(State of Corporation)

Business Address:_____
_____
_____
_____

Witness: _____ By: _____
(Authorized Signature)

(SEAL) _____
(Title)

Date: _____

ATTACHMENTS

Sub-Contractor List
Non-Collusion Statement
Bid Bond
Consent of Surety
Delaware Business License
(Others as Required by Project Manuals)

SUBCONTRACTOR LIST

In accordance with Title 29, Chapter 6962 (d)(10)b Delaware Code, the following sub-contractor listing must accompany the bid submittal. The name and address of the sub-contractor must be listed for each category where the bidder intends to use a sub-contractor to perform that category of work. In order to provide full disclosure and acceptance of the bid by the Owner, **it is required that bidders list themselves as being the sub-contractor for all categories where he/she is qualified and intends to perform such work.**

Subcontractor Category	Subcontractor **Subcontractors tax payer ID #** **or Delaware Business license #**	Address (City & State)
1. Concrete	_____	_____

NON-COLLUSION STATEMENT

This is to certify that the undersigned bidder has neither directly nor indirectly, entered into any agreement, participated in any collusion or otherwise taken any action in restraint of free competitive bidding in connection with this proposal submitted this date _____.

All the terms and conditions of A-02, Concrete have been thoroughly examined and are understood.

NAME OF BIDDER: _____

AUTHORIZED REPRESENTATIVE (TYPED): _____

AUTHORIZED REPRESENTATIVE (SIGNATURE): _____

TITLE: _____

ADDRESS OF BIDDER: _____

_____

_____

PHONE NUMBER: _____

Sworn to and Subscribed before me this _____ day of _____ 20____.

My Commission expires _____. NOTARY PUBLIC _____.

THIS PAGE MUST BE SIGNED AND NOTARIZED FOR YOUR BID TO BE CONSIDERED.

BID BOND

TO ACCOMPANY PROPOSAL
(Not necessary if security is used)

KNOW ALL MEN BY THESE PRESENTS That: _____of _____in the County of _____ and State of _____ as Principal, and _____of _____in the County of _____ _____ and State of _____ as Surety, legally authorized to do business in the State of Delaware ('State"), are held and firmly unto the Indian River School District in the sum of _____ Dollars (S_____), or percent not to exceed _____ Dollars (S_____) of amount of bid on Contract No. _____ to be paid to the Indian River School District for the use and benefit of the Indian River School District for which payment well and truly to be made, we do bind ourselves, our and each of our heirs, executors, administrators, and successors, jointly and severally for and in the whole firmly by these presents.

NOW THE CONDITION OF THIS OBLIGATION IS SUCH That if the above bounden Principal who has submitted to the Indian River School District a certain proposal to enter into this contract for the furnishing of certain material and/or services within the State, shall be awarded this Contract, and if said Principal shall well and truly enter into and execute this Contract as may be required by the terms of this Contract and approved by the Indian River School District this Contract to be entered into within twenty days after the date of official notice of the award thereof in accordance with the terms of said proposal, then this obligation shall be void or else to be and remain in full force and virtue.

Sealed with _____seal and dated this____day of _____in the year of our Lord two thousand and _____(20__).

SEALED, AND DELIVERED IN THE PRESENCE OF

_____
Name of Bidder (Organization)

Corporate Seal

By:_____
Authorized Signature

Attest _____

_____
Title

_____
Name of Surety

Witness_____

_____

_____
Title

CONSENT OF SURETY

DATE_____

To: Indian River School District
31 Hosier Street
Selbyville, DE 19975

Gentlemen:

We, the _____

_____
(Surety Company's Address)

_____

a Surety Company authorized to do business in the State of Delaware hereby agrees that if

_____
(Contractor)

_____
(Address)

_____

is awarded the Contract No. _____

We will write the required Performance and/or Labor and Material Bond required by Paragraph 9 of the Instructions to Bidders.

_____
(Surety Company)

By _____
(Attorney-in-Fact)

END OF SECTION

Indian River School District
Referendum 2013
Georgetown Elementary School Classroom & Kitchen Additions

A-03: Masonry

BID FORM

For Bids Due: _____ To: Indian River School District
31 Hosier Street
Selbyville, DE 19975

Name of Bidder: _____

Bidder Address: _____

_____

Contact Name: _____ E-Mail Address: _____

Delaware Business License No.:_____ Taxpayer ID No.: _____

(Other License Nos.): _____
(A copy of Bidder's Delaware Business License must be attached to this form.)

Phone No.: ( ) _____ - _____ Fax No.: ( ) _____ - _____

The undersigned, representing that he has read and understands the Bidding Documents and that this bid is made in accordance therewith, that he has visited the site and has familiarized himself with the local conditions under which the Work is to be performed, and that his bid is based upon the materials, systems and equipment described in the Bidding Documents without exception, hereby proposes and agrees to provide all labor, materials, plant, equipment, supplies, transport and other facilities required to execute the work described by the aforesaid documents for the lump sum itemized below:

$_____ ($_____)

ALTERNATES
Alternate prices conform to applicable project specification section. Refer to specifications for a complete description of the following Alternates. An "ADD" or "DEDUCT" amount is indicated by the crossed out part that does not apply.

A. Alternate No. 1: Additional striping of the front parking lot.
   1. Base Bid: Removal of striping in the existing northeast parking lot adjacent to the classroom additions according to Sheet C-101 of the contract documents. Striping of 18 parking spaces and pavement markings as shown on sheet C-201 of the contract documents.
   2. Alternate: Remove the remaining existing striping within the existing northeast parking lot adjacent to the classroom additions on sheet C-202 of the contract documents. Additional restriping of the spaces and pavement marking within the existing northeast parking lot as shown on sheet C-202 of the contract documents and not included in the base bid on sheet C-201 of the contract documents.

Add/Deduct_____($_____)

B. Alternate No. 2: Seal coat front parking lot

1. Base Bid: Removal of striping in the existing northeast parking lot adjacent to the classroom additions according to Sheet C-101 of the contract documents. Striping of 18 parking spaces and pavement markings as shown on sheet C-201 of the contract documents.
2. Alternate: Seal coating 46,610 sqft of the existing northeast parking lot as shown on sheet C-202 of the contract documents. Additional restriping of the spaces and pavement marking within the existing northeast parking lot as shown on sheet C-202 of the contract documents and not included in the base bid on sheet C-201 of the contract documents.

Add/Deduct_____($_____)

C. Alternate No. 3: Mill and overlay front parking lot

1. Base Bid: Removal of striping in the existing northeast parking lot adjacent to the classroom additions according to Sheet C-101 of the contract documents. Striping of 18 parking spaces and pavement markings as shown on sheet C-201 of the contract documents.
2. Alternate: Sawcut and rotomill 46,610 sqft of the existing northeast parking lot as shown on sheet C-202 of the contract documents. Additional restriping of the spaces and pavement marking within the existing northeast parking lot as shown on sheet C-202 of the contract documents and not included in the base bid on sheet C-201 of the contract documents.

Add/Deduct _____($_____)

D. Alternate No. 4: Multipurpose Room Finishes

1. Base Bid: At Multipurpose Room #132, existing finish flooring remain; patch and replace tiles at removed serving lines; and walls repainted, as indicated on Sheet.
2. Alternate: In lieu of base bid, provide new finish flooring and wall finishes as indicated on Sheets A107 and A601.

Add/Deduct _____($_____)

E. Alternate No. 5: Existing Stair Tread/Riser and Landing.

1. Base Bid: At Stair 127/218, repaint existing stair risers and VCT on treads and landing remains, as indicated on Sheet A103.
2. Alternate: In lieu of base bid, remove VCT at landing and provide rubber tile, and provide new rubber stair tread with integral risers as indicated on Sheet A103 and Section 096513.

Add/Deduct _____($_____)

UNIT PRICES

Unit prices conform to applicable project specification section. Refer to the specifications for a complete description of the following Unit Prices:

A. Unit Price No. 1: Removal of unsatisfactory soil and replacement and installation of satisfactory soil material.
   1. Description: Unsatisfactory soil excavation and disposal off site and replacement with satisfactory fill material or engineered fill from off site, as required, according to Section 312000 "Earth Moving."
   2. Unit of Measurement: Cubic yard of soil excavated, based on survey of volume removed.

   Add_____($_____) Deduct_____($_____)

B. Unit Price No. 2: Full depth pavement patch.
   1. Description: Saw cutting and removal of complete pavement section and unsuitable subsoils in the areas of pavement above and beyond the base bid as shown on the contract documents. Complete replacement and installation of pavement section in accordance with the "On-Site Pavement Section" detail provided on sheet C-902 of the contract documents.
   2. Unit of Measurement: Square foot of pavement area, based on survey of area removed.

   Add_____($_____) Deduct_____($_____)

C. Unit Price No. 3: 2" Mill and overlay.
   1. Description: Additional 2" milling of existing pavement by contactor and installation of a 2" overlay above and beyond the base bid as shown on the contract documents.
   2. Unit of Measurement: square foot of area to be milled, based on survey of area removed.

   Add_____($_____) Deduct_____($_____)

D. Unit Price No. 4: Seal Coating Pavement area.
   1. Description: Additional seal coating of parking surfaces and marking in addition to the area specified by the Alternate no. 2.
   2. Unit of Measurement: Square foot.

   Add_____($_____) Deduct_____($_____)

NOTE: The difference in price between Add and Deduct in the above Unit Prices should not exceed fifteen percent (15%).

I/We acknowledge Addendums numbered _____ and the price(s) submitted include any cost/schedule impact they may have.

This bid shall remain valid and cannot be withdrawn for sixty (60) days from the date of opening of bids, and the undersigned shall abide by the Bid Security forfeiture provisions. Bid Security is attached to this Bid (if required).

The Owner shall have the right to reject any or all bids, and to waive any informality or irregularity in any bid received.

This bid is based upon work being accomplished by the Sub-Contractors named on the list attached to this bid.

The undersigned represents and warrants that he has complied and shall comply with all requirements of local, state, and national laws; that no legal requirement has been or shall be violated in making or accepting this bid, in awarding the contract to him or in the prosecution of the work required; that the bid is legal and firm; that he has not, directly or indirectly, entered into any agreement, participated in any collusion, or otherwise taken action in restraint of free competitive bidding.

Upon receipt of written notice of the acceptance of this Bid, the Bidder shall, within twenty (20) calendar days, execute the agreement in the required form and deliver the Contract Bonds, and Insurance Certificates, required by the Contract Documents.

I am / We are an Individual / a Partnership / a Corporation

By _____ Trading as _____
(Individual's / General Partner's / Corporate Name)

_____
(State of Corporation)

Business Address:_____
_____
_____
_____

Witness: _____ By: _____
(Authorized Signature)

(SEAL) _____
(Title)

Date: _____

ATTACHMENTS

Sub-Contractor List
Non-Collusion Statement
Bid Bond
Consent of Surety
Delaware Business License
(Others as Required by Project Manuals)

SUBCONTRACTOR LIST

In accordance with Title 29, Chapter 6962 (d)(10)b Delaware Code, the following sub-contractor listing must accompany the bid submittal. The name and address of the sub-contractor must be listed for each category where the bidder intends to use a sub-contractor to perform that category of work. In order to provide full disclosure and acceptance of the bid by the Owner, **it is required that bidders list themselves as being the sub-contractor for all categories where he/she is qualified and intends to perform such work.**

Subcontractor Category	Subcontractor **Subcontractors tax payer ID #** **or Delaware Business license #**	Address (City & State)
1. Masonry	_____	_____

NON-COLLUSION STATEMENT

This is to certify that the undersigned bidder has neither directly nor indirectly, entered into any agreement, participated in any collusion or otherwise taken any action in restraint of free competitive bidding in connection with this proposal submitted this date _____.

All the terms and conditions of A-03, Masonry have been thoroughly examined and are understood.

NAME OF BIDDER: _____

AUTHORIZED REPRESENTATIVE (TYPED): _____

AUTHORIZED REPRESENTATIVE (SIGNATURE): _____

TITLE: _____

ADDRESS OF BIDDER: _____

_____

_____

PHONE NUMBER: _____

Sworn to and Subscribed before me this _____ day of _____ 20____.

My Commission expires _____. NOTARY PUBLIC _____.

THIS PAGE MUST BE SIGNED AND NOTARIZED FOR YOUR BID TO BE CONSIDERED.

BID BOND

TO ACCOMPANY PROPOSAL
(Not necessary if security is used)

KNOW ALL MEN BY THESE PRESENTS That: _____of _____in the County of _____ and State of _____ as Principal, and _____of _____in the County of _____ _____ and State of _____ as Surety, legally authorized to do business in the State of Delaware ('State"), are held and firmly unto the Indian River School District in the sum of _____ Dollars (S_____), or percent not to exceed _____ Dollars (S_____) of amount of bid on Contract No. _____ to be paid to the Indian River School District for the use and benefit of the Indian River School District for which payment well and truly to be made, we do bind ourselves, our and each of our heirs, executors, administrators, and successors, jointly and severally for and in the whole firmly by these presents.

NOW THE CONDITION OF THIS OBLIGATION IS SUCH That if the above bounden Principal who has submitted to the Indian River School District a certain proposal to enter into this contract for the furnishing of certain material and/or services within the State, shall be awarded this Contract, and if said Principal shall well and truly enter into and execute this Contract as may be required by the terms of this Contract and approved by the Indian River School District this Contract to be entered into within twenty days after the date of official notice of the award thereof in accordance with the terms of said proposal, then this obligation shall be void or else to be and remain in full force and virtue.

Sealed with _____seal and dated this____day of _____in the year of our Lord two thousand and _____(20__).

SEALED, AND DELIVERED IN THE PRESENCE OF

_____
Name of Bidder (Organization)

Corporate Seal

By:_____
Authorized Signature

Attest _____

_____
Title

_____
Name of Surety

Witness_____

_____

_____
Title

CONSENT OF SURETY

DATE_____

To: Indian River School District
31 Hosier Street
Selbyville, DE 19975

Gentlemen:

We, the _____

_____
(Surety Company's Address)

_____

a Surety Company authorized to do business in the State of Delaware hereby agrees that if

_____
(Contractor)

_____
(Address)

_____

is awarded the Contract No. _____

We will write the required Performance and/or Labor and Material Bond required by Paragraph 9 of the Instructions to Bidders.

_____
(Surety Company)

By _____
(Attorney-in-Fact)

END OF SECTION

Indian River School District
Referendum 2013
Georgetown Elementary School Classroom & Kitchen Additions

A-04: Structural Steel & Misc. Metals

BID FORM

For Bids Due: _____ To: Indian River School District
31 Hosier Street
Selbyville, DE 19975

Name of Bidder: _____

Bidder Address: _____

_____

Contact Name: _____ E-Mail Address: _____

Delaware Business License No.: _____ Taxpayer ID No.: _____

(Other License Nos.): _____
(A copy of Bidder's Delaware Business License must be attached to this form.)

Phone No.: ( ) _____ - _____ Fax No.: ( ) _____ - _____

The undersigned, representing that he has read and understands the Bidding Documents and that this bid is made in accordance therewith, that he has visited the site and has familiarized himself with the local conditions under which the Work is to be performed, and that his bid is based upon the materials, systems and equipment described in the Bidding Documents without exception, hereby proposes and agrees to provide all labor, materials, plant, equipment, supplies, transport and other facilities required to execute the work described by the aforesaid documents for the lump sum itemized below:

$_____ ($_____)

ALTERNATES
Alternate prices conform to applicable project specification section. Refer to specifications for a complete description of the following Alternates. An "ADD" or "DEDUCT" amount is indicated by the crossed out part that does not apply.

A. Alternate No. 1: Additional striping of the front parking lot.
   1. Base Bid: Removal of striping in the existing northeast parking lot adjacent to the classroom additions according to Sheet C-101 of the contract documents. Striping of 18 parking spaces and pavement markings as shown on sheet C-201 of the contract documents.
   2. Alternate: Remove the remaining existing striping within the existing northeast parking lot adjacent to the classroom additions on sheet C-202 of the contract documents. Additional restriping of the spaces and pavement marking within the existing northeast parking lot as shown on sheet C-202 of the contract documents and not included in the base bid on sheet C-201 of the contract documents.

Add/Deduct_____($_____)

B. Alternate No. 2: Seal coat front parking lot

1. Base Bid: Removal of striping in the existing northeast parking lot adjacent to the classroom additions according to Sheet C-101 of the contract documents. Striping of 18 parking spaces and pavement markings as shown on sheet C-201 of the contract documents.
2. Alternate: Seal coating 46,610 sqft of the existing northeast parking lot as shown on sheet C-202 of the contract documents. Additional restriping of the spaces and pavement marking within the existing northeast parking lot as shown on sheet C-202 of the contract documents and not included in the base bid on sheet C-201 of the contract documents.

Add/Deduct_____($_____)

C. Alternate No. 3: Mill and overlay front parking lot

1. Base Bid: Removal of striping in the existing northeast parking lot adjacent to the classroom additions according to Sheet C-101 of the contract documents. Striping of 18 parking spaces and pavement markings as shown on sheet C-201 of the contract documents.
2. Alternate: Sawcut and rotomill 46,610 sqft of the existing northeast parking lot as shown on sheet C-202 of the contract documents. Additional restriping of the spaces and pavement marking within the existing northeast parking lot as shown on sheet C-202 of the contract documents and not included in the base bid on sheet C-201 of the contract documents.

Add/Deduct _____($_____)

D. Alternate No. 4: Multipurpose Room Finishes

1. Base Bid: At Multipurpose Room #132, existing finish flooring remain; patch and replace tiles at removed serving lines; and walls repainted, as indicated on Sheet.
2. Alternate: In lieu of base bid, provide new finish flooring and wall finishes as indicated on Sheets A107 and A601.

Add/Deduct _____($_____)

E. Alternate No. 5: Existing Stair Tread/Riser and Landing.

1. Base Bid: At Stair 127/218, repaint existing stair risers and VCT on treads and landing remains, as indicated on Sheet A103.
2. Alternate: In lieu of base bid, remove VCT at landing and provide rubber tile, and provide new rubber stair tread with integral risers as indicated on Sheet A103 and Section 096513.

Add/Deduct _____($_____)

UNIT PRICES

Unit prices conform to applicable project specification section. Refer to the specifications for a complete description of the following Unit Prices:

A. Unit Price No. 1: Removal of unsatisfactory soil and replacement and installation of satisfactory soil material.
   1. Description: Unsatisfactory soil excavation and disposal off site and replacement with satisfactory fill material or engineered fill from off site, as required, according to Section 312000 "Earth Moving."
   2. Unit of Measurement: Cubic yard of soil excavated, based on survey of volume removed.

   Add_____($_____) Deduct_____($_____)

B. Unit Price No. 2: Full depth pavement patch.
   1. Description: Saw cutting and removal of complete pavement section and unsuitable subsoils in the areas of pavement above and beyond the base bid as shown on the contract documents. Complete replacement and installation of pavement section in accordance with the "On-Site Pavement Section" detail provided on sheet C-902 of the contract documents.
   2. Unit of Measurement: Square foot of pavement area, based on survey of area removed.

   Add_____($_____) Deduct_____($_____)

C. Unit Price No. 3: 2" Mill and overlay.
   1. Description: Additional 2" milling of existing pavement by contactor and installation of a 2" overlay above and beyond the base bid as shown on the contract documents.
   2. Unit of Measurement: square foot of area to be milled, based on survey of area removed.

   Add_____($_____) Deduct_____($_____)

D. Unit Price No. 4: Seal Coating Pavement area.
   1. Description: Additional seal coating of parking surfaces and marking in addition to the area specified by the Alternate no. 2.
   2. Unit of Measurement: Square foot.

   Add_____($_____) Deduct_____($_____)

NOTE: The difference in price between Add and Deduct in the above Unit Prices should not exceed fifteen percent (15%).

I/We acknowledge Addendums numbered _____ and the price(s) submitted include any cost/schedule impact they may have.

This bid shall remain valid and cannot be withdrawn for sixty (60) days from the date of opening of bids, and the undersigned shall abide by the Bid Security forfeiture provisions. Bid Security is attached to this Bid (if required).

The Owner shall have the right to reject any or all bids, and to waive any informality or irregularity in any bid received.

This bid is based upon work being accomplished by the Sub-Contractors named on the list attached to this bid.

The undersigned represents and warrants that he has complied and shall comply with all requirements of local, state, and national laws; that no legal requirement has been or shall be violated in making or accepting this bid, in awarding the contract to him or in the prosecution of the work required; that the bid is legal and firm; that he has not, directly or indirectly, entered into any agreement, participated in any collusion, or otherwise taken action in restraint of free competitive bidding.

Upon receipt of written notice of the acceptance of this Bid, the Bidder shall, within twenty (20) calendar days, execute the agreement in the required form and deliver the Contract Bonds, and Insurance Certificates, required by the Contract Documents.

I am / We are an Individual / a Partnership / a Corporation

By _____ Trading as _____
(Individual's / General Partner's / Corporate Name)

_____
(State of Corporation)

Business Address:_____
_____
_____
_____

Witness: _____ By: _____
(Authorized Signature)

(SEAL) _____
(Title)

Date: _____

ATTACHMENTS

Sub-Contractor List
Non-Collusion Statement
Bid Bond
Consent of Surety
Delaware Business License
(Others as Required by Project Manuals)

Indian River School District
Referendum 2013
Georgetown Elementary School Classroom & Kitchen Additions

SUBCONTRACTOR LIST

In accordance with Title 29, Chapter 6962 (d)(10)b Delaware Code, the following sub-contractor listing must accompany the bid submittal. The name and address of the sub-contractor must be listed for each category where the bidder intends to use a sub-contractor to perform that category of work. In order to provide full disclosure and acceptance of the bid by the Owner, **it is required that bidders list themselves as being the sub-contractor for all categories where he/she is qualified and intends to perform such work.**

Subcontractor Category	Subcontractor **Subcontractors tax payer ID #** **or Delaware Business license #**	Address (City & State)
1. Structural Steel & Misc. Metals	_____	_____

NON-COLLUSION STATEMENT

This is to certify that the undersigned bidder has neither directly nor indirectly, entered into any agreement, participated in any collusion or otherwise taken any action in restraint of free competitive bidding in connection with this proposal submitted this date _____.

All the terms and conditions of A-04, Structural Steel & Misc. Metals have been thoroughly examined and are understood.

NAME OF BIDDER: _____

AUTHORIZED REPRESENTATIVE (TYPED): _____

AUTHORIZED REPRESENTATIVE (SIGNATURE): _____

TITLE: _____

ADDRESS OF BIDDER: _____

_____

_____

PHONE NUMBER: _____

Sworn to and Subscribed before me this _____ day of _____ 20____.

My Commission expires _____. NOTARY PUBLIC _____.

THIS PAGE MUST BE SIGNED AND NOTARIZED FOR YOUR BID TO BE CONSIDERED.

BID BOND

TO ACCOMPANY PROPOSAL
(Not necessary if security is used)

KNOW ALL MEN BY THESE PRESENTS That: _____of _____in the County of _____ and State of _____ as Principal, and _____of _____in the County of _____ _____ and State of _____ as Surety, legally authorized to do business in the State of Delaware ('State"), are held and firmly unto the Indian River School District in the sum of _____ Dollars (S_____), or percent not to exceed _____ Dollars (S_____) of amount of bid on Contract No. _____ to be paid to the Indian River School District for the use and benefit of the Indian River School District for which payment well and truly to be made, we do bind ourselves, our and each of our heirs, executors, administrators, and successors, jointly and severally for and in the whole firmly by these presents.

NOW THE CONDITION OF THIS OBLIGATION IS SUCH That if the above bounden Principal who has submitted to the Indian River School District a certain proposal to enter into this contract for the furnishing of certain material and/or services within the State, shall be awarded this Contract, and if said Principal shall well and truly enter into and execute this Contract as may be required by the terms of this Contract and approved by the Indian River School District this Contract to be entered into within twenty days after the date of official notice of the award thereof in accordance with the terms of said proposal, then this obligation shall be void or else to be and remain in full force and virtue.

Sealed with _____seal and dated this____day of _____in the year of our Lord two thousand and _____(20__).

SEALED, AND DELIVERED IN THE PRESENCE OF

_____
Name of Bidder (Organization)

Corporate Seal

By:_____
Authorized Signature

Attest _____

_____
Title

_____
Name of Surety

Witness_____

_____

_____
Title

CONSENT OF SURETY

DATE_____

To: Indian River School District
31 Hosier Street
Selbyville, DE 19975

Gentlemen:

We, the _____

_____
(Surety Company's Address)

_____

a Surety Company authorized to do business in the State of Delaware hereby agrees that if

_____
(Contractor)

_____
(Address)

_____

is awarded the Contract No. _____

We will write the required Performance and/or Labor and Material Bond required by Paragraph 9 of the Instructions to Bidders.

_____
(Surety Company)

By _____
(Attorney-in-Fact)

END OF SECTION

Indian River School District
Referendum 2013
Georgetown Elementary School Classroom & Kitchen Additions

A-05: Carpentry & General Work

BID FORM

For Bids Due: _____ To: Indian River School District
31 Hosier Street
Selbyville, DE 19975

Name of Bidder: _____

Bidder Address: _____

_____

Contact Name: _____ E-Mail Address: _____

Delaware Business License No.: _____ Taxpayer ID No.: _____

(Other License Nos.): _____
(A copy of Bidder's Delaware Business License must be attached to this form.)

Phone No.: ( ) _____ - _____ Fax No.: ( ) _____ - _____

The undersigned, representing that he has read and understands the Bidding Documents and that this bid is made in accordance therewith, that he has visited the site and has familiarized himself with the local conditions under which the Work is to be performed, and that his bid is based upon the materials, systems and equipment described in the Bidding Documents without exception, hereby proposes and agrees to provide all labor, materials, plant, equipment, supplies, transport and other facilities required to execute the work described by the aforesaid documents for the lump sum itemized below:

$_____ ($_____)

ALTERNATES
Alternate prices conform to applicable project specification section. Refer to specifications for a complete description of the following Alternates. An "ADD" or "DEDUCT" amount is indicated by the crossed out part that does not apply.

A. Alternate No. 1: Additional striping of the front parking lot.
   1. Base Bid: Removal of striping in the existing northeast parking lot adjacent to the classroom additions according to Sheet C-101 of the contract documents. Striping of 18 parking spaces and pavement markings as shown on sheet C-201 of the contract documents.
   2. Alternate: Remove the remaining existing striping within the existing northeast parking lot adjacent to the classroom additions on sheet C-202 of the contract documents. Additional restriping of the spaces and pavement marking within the existing northeast parking lot as shown on sheet C-202 of the contract documents and not included in the base bid on sheet C-201 of the contract documents.

Add/Deduct_____($_____)

B. Alternate No. 2: Seal coat front parking lot

1. Base Bid: Removal of striping in the existing northeast parking lot adjacent to the classroom additions according to Sheet C-101 of the contract documents. Striping of 18 parking spaces and pavement markings as shown on sheet C-201 of the contract documents.
2. Alternate: Seal coating 46,610 sqft of the existing northeast parking lot as shown on sheet C-202 of the contract documents. Additional restriping of the spaces and pavement marking within the existing northeast parking lot as shown on sheet C-202 of the contract documents and not included in the base bid on sheet C-201 of the contract documents.

Add/Deduct_____($_____)

C. Alternate No. 3: Mill and overlay front parking lot

1. Base Bid: Removal of striping in the existing northeast parking lot adjacent to the classroom additions according to Sheet C-101 of the contract documents. Striping of 18 parking spaces and pavement markings as shown on sheet C-201 of the contract documents.
2. Alternate: Sawcut and rotomill 46,610 sqft of the existing northeast parking lot as shown on sheet C-202 of the contract documents. Additional restriping of the spaces and pavement marking within the existing northeast parking lot as shown on sheet C-202 of the contract documents and not included in the base bid on sheet C-201 of the contract documents.

Add/Deduct _____($_____)

D. Alternate No. 4: Multipurpose Room Finishes

1. Base Bid: At Multipurpose Room #132, existing finish flooring remain; patch and replace tiles at removed serving lines; and walls repainted, as indicated on Sheet.
2. Alternate: In lieu of base bid, provide new finish flooring and wall finishes as indicated on Sheets A107 and A601.

Add/Deduct _____($_____)

E. Alternate No. 5: Existing Stair Tread/Riser and Landing.

1. Base Bid: At Stair 127/218, repaint existing stair risers and VCT on treads and landing remains, as indicated on Sheet A103.
2. Alternate: In lieu of base bid, remove VCT at landing and provide rubber tile, and provide new rubber stair tread with integral risers as indicated on Sheet A103 and Section 096513.

Add/Deduct _____($_____)

UNIT PRICES

Unit prices conform to applicable project specification section. Refer to the specifications for a complete description of the following Unit Prices:

A. Unit Price No. 1: Removal of unsatisfactory soil and replacement and installation of satisfactory soil material.
   1. Description: Unsatisfactory soil excavation and disposal off site and replacement with satisfactory fill material or engineered fill from off site, as required, according to Section 312000 "Earth Moving."
   2. Unit of Measurement: Cubic yard of soil excavated, based on survey of volume removed.

   Add_____($_____) Deduct_____($_____)

B. Unit Price No. 2: Full depth pavement patch.
   1. Description: Saw cutting and removal of complete pavement section and unsuitable subsoils in the areas of pavement above and beyond the base bid as shown on the contract documents. Complete replacement and installation of pavement section in accordance with the "On-Site Pavement Section" detail provided on sheet C-902 of the contract documents.
   2. Unit of Measurement: Square foot of pavement area, based on survey of area removed.

   Add_____($_____) Deduct_____($_____)

C. Unit Price No. 3: 2" Mill and overlay.
   1. Description: Additional 2" milling of existing pavement by contactor and installation of a 2" overlay above and beyond the base bid as shown on the contract documents.
   2. Unit of Measurement: square foot of area to be milled, based on survey of area removed.

   Add_____($_____) Deduct_____($_____)

D. Unit Price No. 4: Seal Coating Pavement area.
   1. Description: Additional seal coating of parking surfaces and marking in addition to the area specified by the Alternate no. 2.
   2. Unit of Measurement: Square foot.

   Add_____($_____) Deduct_____($_____)

NOTE: The difference in price between Add and Deduct in the above Unit Prices should not exceed fifteen percent (15%).

I/We acknowledge Addendums numbered _____ and the price(s) submitted include any cost/schedule impact they may have.

This bid shall remain valid and cannot be withdrawn for sixty (60) days from the date of opening of bids, and the undersigned shall abide by the Bid Security forfeiture provisions. Bid Security is attached to this Bid (if required).

The Owner shall have the right to reject any or all bids, and to waive any informality or irregularity in any bid received.

This bid is based upon work being accomplished by the Sub-Contractors named on the list attached to this bid.

The undersigned represents and warrants that he has complied and shall comply with all requirements of local, state, and national laws; that no legal requirement has been or shall be violated in making or accepting this bid, in awarding the contract to him or in the prosecution of the work required; that the bid is legal and firm; that he has not, directly or indirectly, entered into any agreement, participated in any collusion, or otherwise taken action in restraint of free competitive bidding.

Upon receipt of written notice of the acceptance of this Bid, the Bidder shall, within twenty (20) calendar days, execute the agreement in the required form and deliver the Contract Bonds, and Insurance Certificates, required by the Contract Documents.

I am / We are an Individual / a Partnership / a Corporation

By _____ Trading as _____
(Individual's / General Partner's / Corporate Name)

_____
(State of Corporation)

Business Address:_____
_____
_____
_____

Witness: _____ By: _____
(Authorized Signature)

(SEAL) _____
(Title)

Date: _____

ATTACHMENTS

Sub-Contractor List
Non-Collusion Statement
Bid Bond
Consent of Surety
Delaware Business License
(Others as Required by Project Manuals)

Indian River School District
Referendum 2013
Georgetown Elementary School Classroom & Kitchen Additions

SUBCONTRACTOR LIST

In accordance with Title 29, Chapter 6962 (d)(10)b Delaware Code, the following sub-contractor listing must accompany the bid submittal. The name and address of the sub-contractor must be listed for each category where the bidder intends to use a sub-contractor to perform that category of work. In order to provide full disclosure and acceptance of the bid by the Owner, **it is required that bidders list themselves as being the sub-contractor for all categories where he/she is qualified and intends to perform such work.**

Subcontractor Category	Subcontractor **Subcontractors tax payer ID #** **or Delaware Business license #**	Address (City & State)
1. Carpentry	_____	_____
2. Drywall	_____	_____

NON-COLLUSION STATEMENT

This is to certify that the undersigned bidder has neither directly nor indirectly, entered into any agreement, participated in any collusion or otherwise taken any action in restraint of free competitive bidding in connection with this proposal submitted this date _____.

All the terms and conditions of A-05, Carpentry & General Work have been thoroughly examined and are understood.

NAME OF BIDDER: _____

AUTHORIZED REPRESENTATIVE (TYPED): _____

AUTHORIZED REPRESENTATIVE (SIGNATURE): _____

TITLE: _____

ADDRESS OF BIDDER: _____

_____

_____

PHONE NUMBER: _____

Sworn to and Subscribed before me this _____ day of _____ 20____.

My Commission expires _____. NOTARY PUBLIC _____.

THIS PAGE MUST BE SIGNED AND NOTARIZED FOR YOUR BID TO BE CONSIDERED.

BID BOND

TO ACCOMPANY PROPOSAL
(Not necessary if security is used)

KNOW ALL MEN BY THESE PRESENTS That: _____of _____in the County of _____ and State of _____ as Principal, and _____of _____in the County of _____ _____ and State of _____ as Surety, legally authorized to do business in the State of Delaware ('State"), are held and firmly unto the Indian River School District in the sum of _____ Dollars (S_____), or percent not to exceed _____ Dollars (S_____) of amount of bid on Contract No. _____ to be paid to the Indian River School District for the use and benefit of the Indian River School District for which payment well and truly to be made, we do bind ourselves, our and each of our heirs, executors, administrators, and successors, jointly and severally for and in the whole firmly by these presents.

NOW THE CONDITION OF THIS OBLIGATION IS SUCH That if the above bounden Principal who has submitted to the Indian River School District a certain proposal to enter into this contract for the furnishing of certain material and/or services within the State, shall be awarded this Contract, and if said Principal shall well and truly enter into and execute this Contract as may be required by the terms of this Contract and approved by the Indian River School District this Contract to be entered into within twenty days after the date of official notice of the award thereof in accordance with the terms of said proposal, then this obligation shall be void or else to be and remain in full force and virtue.

Sealed with _____seal and dated this____day of _____in the year of our Lord two thousand and _____(20__).

SEALED, AND DELIVERED IN THE PRESENCE OF

_____
Name of Bidder (Organization)

Corporate Seal

By:_____
Authorized Signature

Attest _____

_____
Title

_____
Name of Surety

Witness_____

_____

_____
Title

CONSENT OF SURETY

DATE_____

To: Indian River School District
31 Hosier Street
Selbyville, DE 19975

Gentlemen:

We, the _____

_____
(Surety Company's Address)

_____

a Surety Company authorized to do business in the State of Delaware hereby agrees that if

_____
(Contractor)

_____
(Address)

_____

is awarded the Contract No. _____

We will write the required Performance and/or Labor and Material Bond required by Paragraph 9 of the Instructions to Bidders.

_____
(Surety Company)

By _____
(Attorney-in-Fact)

END OF SECTION

A-06: Roofing

BID FORM

For Bids Due: _____ To: Indian River School District
31 Hosier Street
Selbyville, DE 19975

Name of Bidder: _____

Bidder Address: _____

_____

Contact Name: _____ E-Mail Address: _____

Delaware Business License No.: _____ Taxpayer ID No.: _____

(Other License Nos.): _____
(A copy of Bidder's Delaware Business License must be attached to this form.)

Phone No.: ( ) _____ - _____ Fax No.: ( ) _____ - _____

The undersigned, representing that he has read and understands the Bidding Documents and that this bid is made in accordance therewith, that he has visited the site and has familiarized himself with the local conditions under which the Work is to be performed, and that his bid is based upon the materials, systems and equipment described in the Bidding Documents without exception, hereby proposes and agrees to provide all labor, materials, plant, equipment, supplies, transport and other facilities required to execute the work described by the aforesaid documents for the lump sum itemized below:

$_____ ($_____)

ALTERNATES
Alternate prices conform to applicable project specification section. Refer to specifications for a complete description of the following Alternates. An "ADD" or "DEDUCT" amount is indicated by the crossed out part that does not apply.

A. Alternate No. 1: Additional striping of the front parking lot.
   1. Base Bid: Removal of striping in the existing northeast parking lot adjacent to the classroom additions according to Sheet C-101 of the contract documents. Striping of 18 parking spaces and pavement markings as shown on sheet C-201 of the contract documents.
   2. Alternate: Remove the remaining existing striping within the existing northeast parking lot adjacent to the classroom additions on sheet C-202 of the contract documents. Additional restriping of the spaces and pavement marking within the existing northeast parking lot as shown on sheet C-202 of the contract documents and not included in the base bid on sheet C-201 of the contract documents.

Add/Deduct_____($_____)

B. Alternate No. 2: Seal coat front parking lot

1. Base Bid: Removal of striping in the existing northeast parking lot adjacent to the classroom additions according to Sheet C-101 of the contract documents. Striping of 18 parking spaces and pavement markings as shown on sheet C-201 of the contract documents.
2. Alternate: Seal coating 46,610 sqft of the existing northeast parking lot as shown on sheet C-202 of the contract documents. Additional restriping of the spaces and pavement marking within the existing northeast parking lot as shown on sheet C-202 of the contract documents and not included in the base bid on sheet C-201 of the contract documents.

Add/Deduct_____($_____)

C. Alternate No. 3: Mill and overlay front parking lot

1. Base Bid: Removal of striping in the existing northeast parking lot adjacent to the classroom additions according to Sheet C-101 of the contract documents. Striping of 18 parking spaces and pavement markings as shown on sheet C-201 of the contract documents.
2. Alternate: Sawcut and rotomill 46,610 sqft of the existing northeast parking lot as shown on sheet C-202 of the contract documents. Additional restriping of the spaces and pavement marking within the existing northeast parking lot as shown on sheet C-202 of the contract documents and not included in the base bid on sheet C-201 of the contract documents.

Add/Deduct _____($_____)

D. Alternate No. 4: Multipurpose Room Finishes

1. Base Bid: At Multipurpose Room #132, existing finish flooring remain; patch and replace tiles at removed serving lines; and walls repainted, as indicated on Sheet.
2. Alternate: In lieu of base bid, provide new finish flooring and wall finishes as indicated on Sheets A107 and A601.

Add/Deduct _____($_____)

E. Alternate No. 5: Existing Stair Tread/Riser and Landing.

1. Base Bid: At Stair 127/218, repaint existing stair risers and VCT on treads and landing remains, as indicated on Sheet A103.
2. Alternate: In lieu of base bid, remove VCT at landing and provide rubber tile, and provide new rubber stair tread with integral risers as indicated on Sheet A103 and Section 096513.

Add/Deduct _____($_____)

UNIT PRICES

Unit prices conform to applicable project specification section. Refer to the specifications for a complete description of the following Unit Prices:

A. Unit Price No. 1: Removal of unsatisfactory soil and replacement and installation of satisfactory soil material.
   1. Description: Unsatisfactory soil excavation and disposal off site and replacement with satisfactory fill material or engineered fill from off site, as required, according to Section 312000 "Earth Moving."
   2. Unit of Measurement: Cubic yard of soil excavated, based on survey of volume removed.

   Add_____($_____) Deduct_____($_____)

B. Unit Price No. 2: Full depth pavement patch.
   1. Description: Saw cutting and removal of complete pavement section and unsuitable subsoils in the areas of pavement above and beyond the base bid as shown on the contract documents. Complete replacement and installation of pavement section in accordance with the "On-Site Pavement Section" detail provided on sheet C-902 of the contract documents.
   2. Unit of Measurement: Square foot of pavement area, based on survey of area removed.

   Add_____($_____) Deduct_____($_____)

C. Unit Price No. 3: 2" Mill and overlay.
   1. Description: Additional 2" milling of existing pavement by contactor and installation of a 2" overlay above and beyond the base bid as shown on the contract documents.
   2. Unit of Measurement: square foot of area to be milled, based on survey of area removed.

   Add_____($_____) Deduct_____($_____)

D. Unit Price No. 4: Seal Coating Pavement area.
   1. Description: Additional seal coating of parking surfaces and marking in addition to the area specified by the Alternate no. 2.
   2. Unit of Measurement: Square foot.

   Add_____($_____) Deduct_____($_____)

NOTE: The difference in price between Add and Deduct in the above Unit Prices should not exceed fifteen percent (15%).

I/We acknowledge Addendums numbered _____ and the price(s) submitted include any cost/schedule impact they may have.

This bid shall remain valid and cannot be withdrawn for sixty (60) days from the date of opening of bids, and the undersigned shall abide by the Bid Security forfeiture provisions. Bid Security is attached to this Bid (if required).

The Owner shall have the right to reject any or all bids, and to waive any informality or irregularity in any bid received.

This bid is based upon work being accomplished by the Sub-Contractors named on the list attached to this bid.

The undersigned represents and warrants that he has complied and shall comply with all requirements of local, state, and national laws; that no legal requirement has been or shall be violated in making or accepting this bid, in awarding the contract to him or in the prosecution of the work required; that the bid is legal and firm; that he has not, directly or indirectly, entered into any agreement, participated in any collusion, or otherwise taken action in restraint of free competitive bidding.

Upon receipt of written notice of the acceptance of this Bid, the Bidder shall, within twenty (20) calendar days, execute the agreement in the required form and deliver the Contract Bonds, and Insurance Certificates, required by the Contract Documents.

I am / We are an Individual / a Partnership / a Corporation

By _____ Trading as _____
(Individual's / General Partner's / Corporate Name)

_____
(State of Corporation)

Business Address:_____
_____
_____
_____

Witness: _____ By: _____
(Authorized Signature)

(SEAL) _____
(Title)

Date: _____

ATTACHMENTS

Sub-Contractor List
Non-Collusion Statement
Bid Bond
Consent of Surety
Delaware Business License
(Others as Required by Project Manuals)

SUBCONTRACTOR LIST

In accordance with Title 29, Chapter 6962 (d)(10)b Delaware Code, the following sub-contractor listing must accompany the bid submittal. The name and address of the sub-contractor must be listed for each category where the bidder intends to use a sub-contractor to perform that category of work. In order to provide full disclosure and acceptance of the bid by the Owner, **it is required that bidders list themselves as being the sub-contractor for all categories where he/she is qualified and intends to perform such work.**

Subcontractor Category	Subcontractor **Subcontractors tax payer ID #** **or Delaware Business license #**	Address (City & State)
1. Roofing	_____	_____

NON-COLLUSION STATEMENT

This is to certify that the undersigned bidder has neither directly nor indirectly, entered into any agreement, participated in any collusion or otherwise taken any action in restraint of free competitive bidding in connection with this proposal submitted this date _____.

All the terms and conditions of A-06, Roofing have been thoroughly examined and are understood.

NAME OF BIDDER: _____

AUTHORIZED REPRESENTATIVE (TYPED): _____

AUTHORIZED REPRESENTATIVE (SIGNATURE): _____

TITLE: _____

ADDRESS OF BIDDER: _____

_____

_____

PHONE NUMBER: _____

Sworn to and Subscribed before me this _____ day of _____ 20____.

My Commission expires _____. NOTARY PUBLIC _____.

THIS PAGE MUST BE SIGNED AND NOTARIZED FOR YOUR BID TO BE CONSIDERED.

BID BOND

TO ACCOMPANY PROPOSAL
(Not necessary if security is used)

KNOW ALL MEN BY THESE PRESENTS That: _____of _____in the County of _____ and State of _____ as Principal, and _____of _____in the County of _____ _____ and State of _____ as Surety, legally authorized to do business in the State of Delaware ('State"), are held and firmly unto the Indian River School District in the sum of _____ Dollars (S_____), or percent not to exceed _____ Dollars (S_____) of amount of bid on Contract No. _____ to be paid to the Indian River School District for the use and benefit of the Indian River School District for which payment well and truly to be made, we do bind ourselves, our and each of our heirs, executors, administrators, and successors, jointly and severally for and in the whole firmly by these presents.

NOW THE CONDITION OF THIS OBLIGATION IS SUCH That if the above bounden Principal who has submitted to the Indian River School District a certain proposal to enter into this contract for the furnishing of certain material and/or services within the State, shall be awarded this Contract, and if said Principal shall well and truly enter into and execute this Contract as may be required by the terms of this Contract and approved by the Indian River School District this Contract to be entered into within twenty days after the date of official notice of the award thereof in accordance with the terms of said proposal, then this obligation shall be void or else to be and remain in full force and virtue.

Sealed with _____seal and dated this____day of _____in the year of our Lord two thousand and _____(20__).

SEALED, AND DELIVERED IN THE PRESENCE OF

_____
Name of Bidder (Organization)

Corporate Seal

By:_____
Authorized Signature

Attest _____

_____
Title

_____
Name of Surety

Witness_____

_____

_____
Title

CONSENT OF SURETY

DATE_____

To: Indian River School District
31 Hosier Street
Selbyville, DE 19975

Gentlemen:

We, the _____

_____
(Surety Company's Address)

_____

a Surety Company authorized to do business in the State of Delaware hereby agrees that if

_____
(Contractor)

_____
(Address)

_____

is awarded the Contract No. _____

We will write the required Performance and/or Labor and Material Bond required by Paragraph 9 of the Instructions to Bidders.

_____
(Surety Company)

By _____
(Attorney-in-Fact)

END OF SECTION

Indian River School District
Referendum 2013
Georgetown Elementary School Classroom & Kitchen Additions

A-07: Glass & Glazing

BID FORM

For Bids Due: _____ To: Indian River School District
31 Hosier Street
Selbyville, DE 19975

Name of Bidder: _____

Bidder Address: _____

_____

Contact Name: _____ E-Mail Address: _____

Delaware Business License No.:_____ Taxpayer ID No.: _____

(Other License Nos.): _____
(A copy of Bidder's Delaware Business License must be attached to this form.)

Phone No.: ( ) _____ - _____ Fax No.: ( ) _____ - _____

The undersigned, representing that he has read and understands the Bidding Documents and that this bid is made in accordance therewith, that he has visited the site and has familiarized himself with the local conditions under which the Work is to be performed, and that his bid is based upon the materials, systems and equipment described in the Bidding Documents without exception, hereby proposes and agrees to provide all labor, materials, plant, equipment, supplies, transport and other facilities required to execute the work described by the aforesaid documents for the lump sum itemized below:

$_____ ($_____)

ALTERNATES
Alternate prices conform to applicable project specification section. Refer to specifications for a complete description of the following Alternates. An "ADD" or "DEDUCT" amount is indicated by the crossed out part that does not apply.

A. Alternate No. 1: Additional striping of the front parking lot.
   1. Base Bid: Removal of striping in the existing northeast parking lot adjacent to the classroom additions according to Sheet C-101 of the contract documents. Striping of 18 parking spaces and pavement markings as shown on sheet C-201 of the contract documents.
   2. Alternate: Remove the remaining existing striping within the existing northeast parking lot adjacent to the classroom additions on sheet C-202 of the contract documents. Additional restriping of the spaces and pavement marking within the existing northeast parking lot as shown on sheet C-202 of the contract documents and not included in the base bid on sheet C-201 of the contract documents.

Add/Deduct_____($_____)

B. Alternate No. 2: Seal coat front parking lot

1. Base Bid: Removal of striping in the existing northeast parking lot adjacent to the classroom additions according to Sheet C-101 of the contract documents. Striping of 18 parking spaces and pavement markings as shown on sheet C-201 of the contract documents.
2. Alternate: Seal coating 46,610 sqft of the existing northeast parking lot as shown on sheet C-202 of the contract documents. Additional restriping of the spaces and pavement marking within the existing northeast parking lot as shown on sheet C-202 of the contract documents and not included in the base bid on sheet C-201 of the contract documents.

Add/Deduct_____($_____)

C. Alternate No. 3: Mill and overlay front parking lot

1. Base Bid: Removal of striping in the existing northeast parking lot adjacent to the classroom additions according to Sheet C-101 of the contract documents. Striping of 18 parking spaces and pavement markings as shown on sheet C-201 of the contract documents.
2. Alternate: Sawcut and rotomill 46,610 sqft of the existing northeast parking lot as shown on sheet C-202 of the contract documents. Additional restriping of the spaces and pavement marking within the existing northeast parking lot as shown on sheet C-202 of the contract documents and not included in the base bid on sheet C-201 of the contract documents.

Add/Deduct _____($_____)

D. Alternate No. 4: Multipurpose Room Finishes

1. Base Bid: At Multipurpose Room #132, existing finish flooring remain; patch and replace tiles at removed serving lines; and walls repainted, as indicated on Sheet.
2. Alternate: In lieu of base bid, provide new finish flooring and wall finishes as indicated on Sheets A107 and A601.

Add/Deduct _____($_____)

E. Alternate No. 5: Existing Stair Tread/Riser and Landing.

1. Base Bid: At Stair 127/218, repaint existing stair risers and VCT on treads and landing remains, as indicated on Sheet A103.
2. Alternate: In lieu of base bid, remove VCT at landing and provide rubber tile, and provide new rubber stair tread with integral risers as indicated on Sheet A103 and Section 096513.

Add/Deduct _____($_____)

UNIT PRICES

Unit prices conform to applicable project specification section. Refer to the specifications for a complete description of the following Unit Prices:

A. Unit Price No. 1: Removal of unsatisfactory soil and replacement and installation of satisfactory soil material.
   1. Description: Unsatisfactory soil excavation and disposal off site and replacement with satisfactory fill material or engineered fill from off site, as required, according to Section 312000 "Earth Moving."
   2. Unit of Measurement: Cubic yard of soil excavated, based on survey of volume removed.

   Add_____($_____) Deduct_____($_____)

B. Unit Price No. 2: Full depth pavement patch.
   1. Description: Saw cutting and removal of complete pavement section and unsuitable subsoils in the areas of pavement above and beyond the base bid as shown on the contract documents. Complete replacement and installation of pavement section in accordance with the "On-Site Pavement Section" detail provided on sheet C-902 of the contract documents.
   2. Unit of Measurement: Square foot of pavement area, based on survey of area removed.

   Add_____($_____) Deduct_____($_____)

C. Unit Price No. 3: 2" Mill and overlay.
   1. Description: Additional 2" milling of existing pavement by contactor and installation of a 2" overlay above and beyond the base bid as shown on the contract documents.
   2. Unit of Measurement: square foot of area to be milled, based on survey of area removed.

   Add_____($_____) Deduct_____($_____)

D. Unit Price No. 4: Seal Coating Pavement area.
   1. Description: Additional seal coating of parking surfaces and marking in addition to the area specified by the Alternate no. 2.
   2. Unit of Measurement: Square foot.

   Add_____($_____) Deduct_____($_____)

NOTE: The difference in price between Add and Deduct in the above Unit Prices should not exceed fifteen percent (15%).

I/We acknowledge Addendums numbered _____ and the price(s) submitted include any cost/schedule impact they may have.

This bid shall remain valid and cannot be withdrawn for sixty (60) days from the date of opening of bids, and the undersigned shall abide by the Bid Security forfeiture provisions. Bid Security is attached to this Bid (if required).

The Owner shall have the right to reject any or all bids, and to waive any informality or irregularity in any bid received.

This bid is based upon work being accomplished by the Sub-Contractors named on the list attached to this bid.

The undersigned represents and warrants that he has complied and shall comply with all requirements of local, state, and national laws; that no legal requirement has been or shall be violated in making or accepting this bid, in awarding the contract to him or in the prosecution of the work required; that the bid is legal and firm; that he has not, directly or indirectly, entered into any agreement, participated in any collusion, or otherwise taken action in restraint of free competitive bidding.

Upon receipt of written notice of the acceptance of this Bid, the Bidder shall, within twenty (20) calendar days, execute the agreement in the required form and deliver the Contract Bonds, and Insurance Certificates, required by the Contract Documents.

I am / We are an Individual / a Partnership / a Corporation

By _____ Trading as _____
(Individual's / General Partner's / Corporate Name)

_____
(State of Corporation)

Business Address:_____
_____
_____
_____

Witness: _____ By: _____
(Authorized Signature)

(SEAL) _____
(Title)

Date: _____

ATTACHMENTS

Sub-Contractor List
Non-Collusion Statement
Bid Bond
Consent of Surety
Delaware Business License
(Others as Required by Project Manuals)

SUBCONTRACTOR LIST

In accordance with Title 29, Chapter 6962 (d)(10)b Delaware Code, the following sub-contractor listing must accompany the bid submittal. The name and address of the sub-contractor must be listed for each category where the bidder intends to use a sub-contractor to perform that category of work. In order to provide full disclosure and acceptance of the bid by the Owner, **it is required that bidders list themselves as being the sub-contractor for all categories where he/she is qualified and intends to perform such work.**

Subcontractor Category	Subcontractor **Subcontractors tax payer ID #** **or Delaware Business license #**	Address (City & State)
1. Glass & Glazing	_____	_____

NON-COLLUSION STATEMENT

This is to certify that the undersigned bidder has neither directly nor indirectly, entered into any agreement, participated in any collusion or otherwise taken any action in restraint of free competitive bidding in connection with this proposal submitted this date _____.

All the terms and conditions of A-07, Glass & Glazing have been thoroughly examined and are understood.

NAME OF BIDDER: _____

AUTHORIZED REPRESENTATIVE (TYPED): _____

AUTHORIZED REPRESENTATIVE (SIGNATURE): _____

TITLE: _____

ADDRESS OF BIDDER: _____

_____

_____

PHONE NUMBER: _____

Sworn to and Subscribed before me this _____ day of _____ 20____.

My Commission expires _____. NOTARY PUBLIC _____.

THIS PAGE MUST BE SIGNED AND NOTARIZED FOR YOUR BID TO BE CONSIDERED.

BID BOND

TO ACCOMPANY PROPOSAL
(Not necessary if security is used)

KNOW ALL MEN BY THESE PRESENTS That: _____of _____in the County of _____ and State of _____ as Principal, and _____of _____in the County of _____ _____ and State of _____ as Surety, legally authorized to do business in the State of Delaware ('State"), are held and firmly unto the Indian River School District in the sum of _____ Dollars (S_____), or percent not to exceed _____ Dollars (S_____) of amount of bid on Contract No. _____ to be paid to the Indian River School District for the use and benefit of the Indian River School District for which payment well and truly to be made, we do bind ourselves, our and each of our heirs, executors, administrators, and successors, jointly and severally for and in the whole firmly by these presents.

NOW THE CONDITION OF THIS OBLIGATION IS SUCH That if the above bounden Principal who has submitted to the Indian River School District a certain proposal to enter into this contract for the furnishing of certain material and/or services within the State, shall be awarded this Contract, and if said Principal shall well and truly enter into and execute this Contract as may be required by the terms of this Contract and approved by the Indian River School District this Contract to be entered into within twenty days after the date of official notice of the award thereof in accordance with the terms of said proposal, then this obligation shall be void or else to be and remain in full force and virtue.

Sealed with _____seal and dated this____day of _____in the year of our Lord two thousand and _____(20__).

SEALED, AND DELIVERED IN THE PRESENCE OF

_____
Name of Bidder (Organization)

Corporate Seal

By:_____
Authorized Signature

Attest _____

_____
Title

_____
Name of Surety

Witness_____

_____

_____
Title

CONSENT OF SURETY

DATE_____

To: Indian River School District
31 Hosier Street
Selbyville, DE 19975

Gentlemen:

We, the _____

_____
(Surety Company's Address)

_____

a Surety Company authorized to do business in the State of Delaware hereby agrees that if

_____
(Contractor)

_____
(Address)

_____

is awarded the Contract No. _____

We will write the required Performance and/or Labor and Material Bond required by Paragraph 9 of the Instructions to Bidders.

_____
(Surety Company)

By _____
(Attorney-in-Fact)

END OF SECTION

Indian River School District
Referendum 2013
Georgetown Elementary School Classroom & Kitchen Additions

A-08: Acoustical Ceilings

BID FORM

For Bids Due: _____ To: Indian River School District
31 Hosier Street
Selbyville, DE 19975

Name of Bidder: _____

Bidder Address: _____

_____

Contact Name: _____ E-Mail Address: _____

Delaware Business License No.: _____ Taxpayer ID No.: _____

(Other License Nos.): _____
(A copy of Bidder's Delaware Business License must be attached to this form.)

Phone No.: ( ) _____ - _____ Fax No.: ( ) _____ - _____

The undersigned, representing that he has read and understands the Bidding Documents and that this bid is made in accordance therewith, that he has visited the site and has familiarized himself with the local conditions under which the Work is to be performed, and that his bid is based upon the materials, systems and equipment described in the Bidding Documents without exception, hereby proposes and agrees to provide all labor, materials, plant, equipment, supplies, transport and other facilities required to execute the work described by the aforesaid documents for the lump sum itemized below:

$_____ ($_____)

ALTERNATES
Alternate prices conform to applicable project specification section. Refer to specifications for a complete description of the following Alternates. An "ADD" or "DEDUCT" amount is indicated by the crossed out part that does not apply.

A. Alternate No. 1: Additional striping of the front parking lot.
   1. Base Bid: Removal of striping in the existing northeast parking lot adjacent to the classroom additions according to Sheet C-101 of the contract documents. Striping of 18 parking spaces and pavement markings as shown on sheet C-201 of the contract documents.
   2. Alternate: Remove the remaining existing striping within the existing northeast parking lot adjacent to the classroom additions on sheet C-202 of the contract documents. Additional restriping of the spaces and pavement marking within the existing northeast parking lot as shown on sheet C-202 of the contract documents and not included in the base bid on sheet C-201 of the contract documents.

Add/Deduct_____($_____)

B. Alternate No. 2: Seal coat front parking lot

1. Base Bid: Removal of striping in the existing northeast parking lot adjacent to the classroom additions according to Sheet C-101 of the contract documents. Striping of 18 parking spaces and pavement markings as shown on sheet C-201 of the contract documents.
2. Alternate: Seal coating 46,610 sqft of the existing northeast parking lot as shown on sheet C-202 of the contract documents. Additional restriping of the spaces and pavement marking within the existing northeast parking lot as shown on sheet C-202 of the contract documents and not included in the base bid on sheet C-201 of the contract documents.

Add/Deduct_____($_____)

C. Alternate No. 3: Mill and overlay front parking lot

1. Base Bid: Removal of striping in the existing northeast parking lot adjacent to the classroom additions according to Sheet C-101 of the contract documents. Striping of 18 parking spaces and pavement markings as shown on sheet C-201 of the contract documents.
2. Alternate: Sawcut and rotomill 46,610 sqft of the existing northeast parking lot as shown on sheet C-202 of the contract documents. Additional restriping of the spaces and pavement marking within the existing northeast parking lot as shown on sheet C-202 of the contract documents and not included in the base bid on sheet C-201 of the contract documents.

Add/Deduct _____($_____)

D. Alternate No. 4: Multipurpose Room Finishes

1. Base Bid: At Multipurpose Room #132, existing finish flooring remain; patch and replace tiles at removed serving lines; and walls repainted, as indicated on Sheet.
2. Alternate: In lieu of base bid, provide new finish flooring and wall finishes as indicated on Sheets A107 and A601.

Add/Deduct _____($_____)

E. Alternate No. 5: Existing Stair Tread/Riser and Landing.

1. Base Bid: At Stair 127/218, repaint existing stair risers and VCT on treads and landing remains, as indicated on Sheet A103.
2. Alternate: In lieu of base bid, remove VCT at landing and provide rubber tile, and provide new rubber stair tread with integral risers as indicated on Sheet A103 and Section 096513.

Add/Deduct _____($_____)

UNIT PRICES

Unit prices conform to applicable project specification section. Refer to the specifications for a complete description of the following Unit Prices:

A. Unit Price No. 1: Removal of unsatisfactory soil and replacement and installation of satisfactory soil material.
   1. Description: Unsatisfactory soil excavation and disposal off site and replacement with satisfactory fill material or engineered fill from off site, as required, according to Section 312000 "Earth Moving."
   2. Unit of Measurement: Cubic yard of soil excavated, based on survey of volume removed.

   Add_____($_____) Deduct_____($_____)

B. Unit Price No. 2: Full depth pavement patch.
   1. Description: Saw cutting and removal of complete pavement section and unsuitable subsoils in the areas of pavement above and beyond the base bid as shown on the contract documents. Complete replacement and installation of pavement section in accordance with the "On-Site Pavement Section" detail provided on sheet C-902 of the contract documents.
   2. Unit of Measurement: Square foot of pavement area, based on survey of area removed.

   Add_____($_____) Deduct_____($_____)

C. Unit Price No. 3: 2" Mill and overlay.
   1. Description: Additional 2" milling of existing pavement by contactor and installation of a 2" overlay above and beyond the base bid as shown on the contract documents.
   2. Unit of Measurement: square foot of area to be milled, based on survey of area removed.

   Add_____($_____) Deduct_____($_____)

D. Unit Price No. 4: Seal Coating Pavement area.
   1. Description: Additional seal coating of parking surfaces and marking in addition to the area specified by the Alternate no. 2.
   2. Unit of Measurement: Square foot.

   Add_____($_____) Deduct_____($_____)

NOTE: The difference in price between Add and Deduct in the above Unit Prices should not exceed fifteen percent (15%).

I/We acknowledge Addendums numbered _____ and the price(s) submitted include any cost/schedule impact they may have.

This bid shall remain valid and cannot be withdrawn for sixty (60) days from the date of opening of bids, and the undersigned shall abide by the Bid Security forfeiture provisions. Bid Security is attached to this Bid (if required).

The Owner shall have the right to reject any or all bids, and to waive any informality or irregularity in any bid received.

This bid is based upon work being accomplished by the Sub-Contractors named on the list attached to this bid.

The undersigned represents and warrants that he has complied and shall comply with all requirements of local, state, and national laws; that no legal requirement has been or shall be violated in making or accepting this bid, in awarding the contract to him or in the prosecution of the work required; that the bid is legal and firm; that he has not, directly or indirectly, entered into any agreement, participated in any collusion, or otherwise taken action in restraint of free competitive bidding.

Upon receipt of written notice of the acceptance of this Bid, the Bidder shall, within twenty (20) calendar days, execute the agreement in the required form and deliver the Contract Bonds, and Insurance Certificates, required by the Contract Documents.

I am / We are an Individual / a Partnership / a Corporation

By _____ Trading as _____
(Individual's / General Partner's / Corporate Name)

_____
(State of Corporation)

Business Address:_____
_____
_____
_____

Witness: _____ By: _____
(Authorized Signature)

(SEAL) _____
(Title)

Date: _____

ATTACHMENTS

Sub-Contractor List
Non-Collusion Statement
Bid Bond
Consent of Surety
Delaware Business License
(Others as Required by Project Manuals)

SUBCONTRACTOR LIST

In accordance with Title 29, Chapter 6962 (d)(10)b Delaware Code, the following sub-contractor listing must accompany the bid submittal. The name and address of the sub-contractor must be listed for each category where the bidder intends to use a sub-contractor to perform that category of work. In order to provide full disclosure and acceptance of the bid by the Owner, **it is required that bidders list themselves as being the sub-contractor for all categories where he/she is qualified and intends to perform such work.**

Subcontractor Category	Subcontractor **Subcontractors tax payer ID #** **or Delaware Business license #**	Address (City & State)
1. Acoustical Ceilings	_____	_____

NON-COLLUSION STATEMENT

This is to certify that the undersigned bidder has neither directly nor indirectly, entered into any agreement, participated in any collusion or otherwise taken any action in restraint of free competitive bidding in connection with this proposal submitted this date _____.

All the terms and conditions of A-08, Acoustical Ceilings have been thoroughly examined and are understood.

NAME OF BIDDER: _____

AUTHORIZED REPRESENTATIVE (TYPED): _____

AUTHORIZED REPRESENTATIVE (SIGNATURE): _____

TITLE: _____

ADDRESS OF BIDDER: _____

_____

_____

PHONE NUMBER: _____

Sworn to and Subscribed before me this _____ day of _____ 20____.

My Commission expires _____. NOTARY PUBLIC _____.

THIS PAGE MUST BE SIGNED AND NOTARIZED FOR YOUR BID TO BE CONSIDERED.

BID BOND

TO ACCOMPANY PROPOSAL
(Not necessary if security is used)

KNOW ALL MEN BY THESE PRESENTS That: _____of _____in the County of _____ and State of _____ as Principal, and _____of _____in the County of _____ _____ and State of _____ as Surety, legally authorized to do business in the State of Delaware ('State"), are held and firmly unto the Indian River School District in the sum of _____ Dollars (S_____), or percent not to exceed _____ Dollars (S_____) of amount of bid on Contract No. _____ to be paid to the Indian River School District for the use and benefit of the Indian River School District for which payment well and truly to be made, we do bind ourselves, our and each of our heirs, executors, administrators, and successors, jointly and severally for and in the whole firmly by these presents.

NOW THE CONDITION OF THIS OBLIGATION IS SUCH That if the above bounden Principal who has submitted to the Indian River School District a certain proposal to enter into this contract for the furnishing of certain material and/or services within the State, shall be awarded this Contract, and if said Principal shall well and truly enter into and execute this Contract as may be required by the terms of this Contract and approved by the Indian River School District this Contract to be entered into within twenty days after the date of official notice of the award thereof in accordance with the terms of said proposal, then this obligation shall be void or else to be and remain in full force and virtue.

Sealed with _____seal and dated this____day of _____in the year of our Lord two thousand and _____(20__).

SEALED, AND DELIVERED IN THE PRESENCE OF

_____
Name of Bidder (Organization)

Corporate Seal

By:_____
Authorized Signature

Attest _____

_____
Title

_____
Name of Surety

Witness_____

_____

_____
Title

CONSENT OF SURETY

DATE_____

To: Indian River School District
31 Hosier Street
Selbyville, DE 19975

Gentlemen:

We, the _____

_____
(Surety Company's Address)

_____

a Surety Company authorized to do business in the State of Delaware hereby agrees that if

_____
(Contractor)

_____
(Address)

_____

is awarded the Contract No. _____

We will write the required Performance and/or Labor and Material Bond required by Paragraph 9 of the Instructions to Bidders.

_____
(Surety Company)

By _____
(Attorney-in-Fact)

END OF SECTION

A-09: Flooring

BID FORM

For Bids Due: _____ To: Indian River School District
31 Hosier Street
Selbyville, DE 19975

Name of Bidder: _____

Bidder Address: _____

_____

Contact Name: _____ E-Mail Address: _____

Delaware Business License No.: _____ Taxpayer ID No.: _____

(Other License Nos.): _____
(A copy of Bidder's Delaware Business License must be attached to this form.)

Phone No.: ( ) _____ - _____ Fax No.: ( ) _____ - _____

The undersigned, representing that he has read and understands the Bidding Documents and that this bid is made in accordance therewith, that he has visited the site and has familiarized himself with the local conditions under which the Work is to be performed, and that his bid is based upon the materials, systems and equipment described in the Bidding Documents without exception, hereby proposes and agrees to provide all labor, materials, plant, equipment, supplies, transport and other facilities required to execute the work described by the aforesaid documents for the lump sum itemized below:

$_____ ($_____)

ALTERNATES
Alternate prices conform to applicable project specification section. Refer to specifications for a complete description of the following Alternates. An "ADD" or "DEDUCT" amount is indicated by the crossed out part that does not apply.

A. Alternate No. 1: Additional striping of the front parking lot.
   1. Base Bid: Removal of striping in the existing northeast parking lot adjacent to the classroom additions according to Sheet C-101 of the contract documents. Striping of 18 parking spaces and pavement markings as shown on sheet C-201 of the contract documents.
   2. Alternate: Remove the remaining existing striping within the existing northeast parking lot adjacent to the classroom additions on sheet C-202 of the contract documents. Additional restriping of the spaces and pavement marking within the existing northeast parking lot as shown on sheet C-202 of the contract documents and not included in the base bid on sheet C-201 of the contract documents.

Add/Deduct_____($_____)

B. Alternate No. 2: Seal coat front parking lot

1. Base Bid: Removal of striping in the existing northeast parking lot adjacent to the classroom additions according to Sheet C-101 of the contract documents. Striping of 18 parking spaces and pavement markings as shown on sheet C-201 of the contract documents.
2. Alternate: Seal coating 46,610 sqft of the existing northeast parking lot as shown on sheet C-202 of the contract documents. Additional restriping of the spaces and pavement marking within the existing northeast parking lot as shown on sheet C-202 of the contract documents and not included in the base bid on sheet C-201 of the contract documents.

Add/Deduct_____($_____)

C. Alternate No. 3: Mill and overlay front parking lot

1. Base Bid: Removal of striping in the existing northeast parking lot adjacent to the classroom additions according to Sheet C-101 of the contract documents. Striping of 18 parking spaces and pavement markings as shown on sheet C-201 of the contract documents.
2. Alternate: Sawcut and rotomill 46,610 sqft of the existing northeast parking lot as shown on sheet C-202 of the contract documents. Additional restriping of the spaces and pavement marking within the existing northeast parking lot as shown on sheet C-202 of the contract documents and not included in the base bid on sheet C-201 of the contract documents.

Add/Deduct _____($_____)

D. Alternate No. 4: Multipurpose Room Finishes

1. Base Bid: At Multipurpose Room #132, existing finish flooring remain; patch and replace tiles at removed serving lines; and walls repainted, as indicated on Sheet.
2. Alternate: In lieu of base bid, provide new finish flooring and wall finishes as indicated on Sheets A107 and A601.

Add/Deduct _____($_____)

E. Alternate No. 5: Existing Stair Tread/Riser and Landing.

1. Base Bid: At Stair 127/218, repaint existing stair risers and VCT on treads and landing remains, as indicated on Sheet A103.
2. Alternate: In lieu of base bid, remove VCT at landing and provide rubber tile, and provide new rubber stair tread with integral risers as indicated on Sheet A103 and Section 096513.

Add/Deduct _____($_____)

UNIT PRICES

Unit prices conform to applicable project specification section. Refer to the specifications for a complete description of the following Unit Prices:

A. Unit Price No. 1: Removal of unsatisfactory soil and replacement and installation of satisfactory soil material.
   1. Description: Unsatisfactory soil excavation and disposal off site and replacement with satisfactory fill material or engineered fill from off site, as required, according to Section 312000 "Earth Moving."
   2. Unit of Measurement: Cubic yard of soil excavated, based on survey of volume removed.

   Add_____($_____) Deduct_____($_____)

B. Unit Price No. 2: Full depth pavement patch.
   1. Description: Saw cutting and removal of complete pavement section and unsuitable subsoils in the areas of pavement above and beyond the base bid as shown on the contract documents. Complete replacement and installation of pavement section in accordance with the "On-Site Pavement Section" detail provided on sheet C-902 of the contract documents.
   2. Unit of Measurement: Square foot of pavement area, based on survey of area removed.

   Add_____($_____) Deduct_____($_____)

C. Unit Price No. 3: 2" Mill and overlay.
   1. Description: Additional 2" milling of existing pavement by contactor and installation of a 2" overlay above and beyond the base bid as shown on the contract documents.
   2. Unit of Measurement: square foot of area to be milled, based on survey of area removed.

   Add_____($_____) Deduct_____($_____)

D. Unit Price No. 4: Seal Coating Pavement area.
   1. Description: Additional seal coating of parking surfaces and marking in addition to the area specified by the Alternate no. 2.
   2. Unit of Measurement: Square foot.

   Add_____($_____) Deduct_____($_____)

NOTE: The difference in price between Add and Deduct in the above Unit Prices should not exceed fifteen percent (15%).

I/We acknowledge Addendums numbered _____ and the price(s) submitted include any cost/schedule impact they may have.

This bid shall remain valid and cannot be withdrawn for sixty (60) days from the date of opening of bids, and the undersigned shall abide by the Bid Security forfeiture provisions. Bid Security is attached to this Bid (if required).

The Owner shall have the right to reject any or all bids, and to waive any informality or irregularity in any bid received.

This bid is based upon work being accomplished by the Sub-Contractors named on the list attached to this bid.

The undersigned represents and warrants that he has complied and shall comply with all requirements of local, state, and national laws; that no legal requirement has been or shall be violated in making or accepting this bid, in awarding the contract to him or in the prosecution of the work required; that the bid is legal and firm; that he has not, directly or indirectly, entered into any agreement, participated in any collusion, or otherwise taken action in restraint of free competitive bidding.

Upon receipt of written notice of the acceptance of this Bid, the Bidder shall, within twenty (20) calendar days, execute the agreement in the required form and deliver the Contract Bonds, and Insurance Certificates, required by the Contract Documents.

I am / We are an Individual / a Partnership / a Corporation

By _____ Trading as _____
(Individual's / General Partner's / Corporate Name)

_____
(State of Corporation)

Business Address:_____
_____
_____
_____

Witness: _____ By: _____
(Authorized Signature)

(SEAL) _____
(Title)

Date: _____

ATTACHMENTS

Sub-Contractor List
Non-Collusion Statement
Bid Bond
Consent of Surety
Delaware Business License
(Others as Required by Project Manuals)

SUBCONTRACTOR LIST

In accordance with Title 29, Chapter 6962 (d)(10)b Delaware Code, the following sub-contractor listing must accompany the bid submittal. The name and address of the sub-contractor must be listed for each category where the bidder intends to use a sub-contractor to perform that category of work. In order to provide full disclosure and acceptance of the bid by the Owner, **it is required that bidders list themselves as being the sub-contractor for all categories where he/she is qualified and intends to perform such work.**

Subcontractor Category	Subcontractor **Subcontractors tax payer ID #** **or Delaware Business license #**	Address (City & State)
1. Resilient Flooring	_____	_____
2. Resinous Flooring	_____	_____

NON-COLLUSION STATEMENT

This is to certify that the undersigned bidder has neither directly nor indirectly, entered into any agreement, participated in any collusion or otherwise taken any action in restraint of free competitive bidding in connection with this proposal submitted this date _____.

All the terms and conditions of A-09, Flooring have been thoroughly examined and are understood.

NAME OF BIDDER: _____

AUTHORIZED REPRESENTATIVE (TYPED): _____

AUTHORIZED REPRESENTATIVE (SIGNATURE): _____

TITLE: _____

ADDRESS OF BIDDER: _____

_____

_____

PHONE NUMBER: _____

Sworn to and Subscribed before me this _____ day of _____ 20____.

My Commission expires _____. NOTARY PUBLIC _____.

THIS PAGE MUST BE SIGNED AND NOTARIZED FOR YOUR BID TO BE CONSIDERED.

BID BOND

TO ACCOMPANY PROPOSAL
(Not necessary if security is used)

KNOW ALL MEN BY THESE PRESENTS That: _____of _____in the County of _____ and State of _____ as Principal, and _____of _____in the County of _____ _____ and State of _____ as Surety, legally authorized to do business in the State of Delaware ('State"), are held and firmly unto the Indian River School District in the sum of _____ Dollars (S_____), or percent not to exceed _____ Dollars (S_____) of amount of bid on Contract No. _____ to be paid to the Indian River School District for the use and benefit of the Indian River School District for which payment well and truly to be made, we do bind ourselves, our and each of our heirs, executors, administrators, and successors, jointly and severally for and in the whole firmly by these presents.

NOW THE CONDITION OF THIS OBLIGATION IS SUCH That if the above bounden Principal who has submitted to the Indian River School District a certain proposal to enter into this contract for the furnishing of certain material and/or services within the State, shall be awarded this Contract, and if said Principal shall well and truly enter into and execute this Contract as may be required by the terms of this Contract and approved by the Indian River School District this Contract to be entered into within twenty days after the date of official notice of the award thereof in accordance with the terms of said proposal, then this obligation shall be void or else to be and remain in full force and virtue.

Sealed with _____seal and dated this____day of _____in the year of our Lord two thousand and _____(20__).

SEALED, AND DELIVERED IN THE PRESENCE OF

_____
Name of Bidder (Organization)

Corporate Seal

By:_____
Authorized Signature

Attest _____

_____
Title

_____
Name of Surety

Witness_____

_____

_____
Title

CONSENT OF SURETY

DATE_____

To: Indian River School District
31 Hosier Street
Selbyville, DE 19975

Gentlemen:

We, the _____

_____
(Surety Company's Address)

_____

a Surety Company authorized to do business in the State of Delaware hereby agrees that if

_____
(Contractor)

_____
(Address)

_____

is awarded the Contract No. _____

We will write the required Performance and/or Labor and Material Bond required by Paragraph 9 of the Instructions to Bidders.

_____
(Surety Company)

By _____
(Attorney-in-Fact)

END OF SECTION

A-010: Painting

BID FORM

For Bids Due: _____ To: Indian River School District
31 Hosier Street
Selbyville, DE 19975

Name of Bidder: _____

Bidder Address: _____

_____

Contact Name: _____ E-Mail Address: _____

Delaware Business License No.: _____ Taxpayer ID No.: _____

(Other License Nos.): _____
(A copy of Bidder's Delaware Business License must be attached to this form.)

Phone No.: ( ) _____ - _____ Fax No.: ( ) _____ - _____

The undersigned, representing that he has read and understands the Bidding Documents and that this bid is made in accordance therewith, that he has visited the site and has familiarized himself with the local conditions under which the Work is to be performed, and that his bid is based upon the materials, systems and equipment described in the Bidding Documents without exception, hereby proposes and agrees to provide all labor, materials, plant, equipment, supplies, transport and other facilities required to execute the work described by the aforesaid documents for the lump sum itemized below:

$_____ ($_____)

ALTERNATES
Alternate prices conform to applicable project specification section. Refer to specifications for a complete description of the following Alternates. An "ADD" or "DEDUCT" amount is indicated by the crossed out part that does not apply.

A. Alternate No. 1: Additional striping of the front parking lot.
   1. Base Bid: Removal of striping in the existing northeast parking lot adjacent to the classroom additions according to Sheet C-101 of the contract documents. Striping of 18 parking spaces and pavement markings as shown on sheet C-201 of the contract documents.
   2. Alternate: Remove the remaining existing striping within the existing northeast parking lot adjacent to the classroom additions on sheet C-202 of the contract documents. Additional restriping of the spaces and pavement marking within the existing northeast parking lot as shown on sheet C-202 of the contract documents and not included in the base bid on sheet C-201 of the contract documents.

Add/Deduct_____($_____)

B. Alternate No. 2: Seal coat front parking lot

1. Base Bid: Removal of striping in the existing northeast parking lot adjacent to the classroom additions according to Sheet C-101 of the contract documents. Striping of 18 parking spaces and pavement markings as shown on sheet C-201 of the contract documents.
2. Alternate: Seal coating 46,610 sqft of the existing northeast parking lot as shown on sheet C-202 of the contract documents. Additional restriping of the spaces and pavement marking within the existing northeast parking lot as shown on sheet C-202 of the contract documents and not included in the base bid on sheet C-201 of the contract documents.

Add/Deduct_____($_____)

C. Alternate No. 3: Mill and overlay front parking lot

1. Base Bid: Removal of striping in the existing northeast parking lot adjacent to the classroom additions according to Sheet C-101 of the contract documents. Striping of 18 parking spaces and pavement markings as shown on sheet C-201 of the contract documents.
2. Alternate: Sawcut and rotomill 46,610 sqft of the existing northeast parking lot as shown on sheet C-202 of the contract documents. Additional restriping of the spaces and pavement marking within the existing northeast parking lot as shown on sheet C-202 of the contract documents and not included in the base bid on sheet C-201 of the contract documents.

Add/Deduct _____($_____)

D. Alternate No. 4: Multipurpose Room Finishes

1. Base Bid: At Multipurpose Room #132, existing finish flooring remain; patch and replace tiles at removed serving lines; and walls repainted, as indicated on Sheet.
2. Alternate: In lieu of base bid, provide new finish flooring and wall finishes as indicated on Sheets A107 and A601.

Add/Deduct _____($_____)

E. Alternate No. 5: Existing Stair Tread/Riser and Landing.

1. Base Bid: At Stair 127/218, repaint existing stair risers and VCT on treads and landing remains, as indicated on Sheet A103.
2. Alternate: In lieu of base bid, remove VCT at landing and provide rubber tile, and provide new rubber stair tread with integral risers as indicated on Sheet A103 and Section 096513.

Add/Deduct _____($_____)

UNIT PRICES

Unit prices conform to applicable project specification section. Refer to the specifications for a complete description of the following Unit Prices:

A. Unit Price No. 1: Removal of unsatisfactory soil and replacement and installation of satisfactory soil material.
   1. Description: Unsatisfactory soil excavation and disposal off site and replacement with satisfactory fill material or engineered fill from off site, as required, according to Section 312000 "Earth Moving."
   2. Unit of Measurement: Cubic yard of soil excavated, based on survey of volume removed.

   Add_____($_____) Deduct_____($_____)

B. Unit Price No. 2: Full depth pavement patch.
   1. Description: Saw cutting and removal of complete pavement section and unsuitable subsoils in the areas of pavement above and beyond the base bid as shown on the contract documents. Complete replacement and installation of pavement section in accordance with the "On-Site Pavement Section" detail provided on sheet C-902 of the contract documents.
   2. Unit of Measurement: Square foot of pavement area, based on survey of area removed.

   Add_____($_____) Deduct_____($_____)

C. Unit Price No. 3: 2" Mill and overlay.
   1. Description: Additional 2" milling of existing pavement by contactor and installation of a 2" overlay above and beyond the base bid as shown on the contract documents.
   2. Unit of Measurement: square foot of area to be milled, based on survey of area removed.

   Add_____($_____) Deduct_____($_____)

D. Unit Price No. 4: Seal Coating Pavement area.
   1. Description: Additional seal coating of parking surfaces and marking in addition to the area specified by the Alternate no. 2.
   2. Unit of Measurement: Square foot.

   Add_____($_____) Deduct_____($_____)

NOTE: The difference in price between Add and Deduct in the above Unit Prices should not exceed fifteen percent (15%).

I/We acknowledge Addendums numbered _____ and the price(s) submitted include any cost/schedule impact they may have.

This bid shall remain valid and cannot be withdrawn for sixty (60) days from the date of opening of bids, and the undersigned shall abide by the Bid Security forfeiture provisions. Bid Security is attached to this Bid (if required).

The Owner shall have the right to reject any or all bids, and to waive any informality or irregularity in any bid received.

This bid is based upon work being accomplished by the Sub-Contractors named on the list attached to this bid.

The undersigned represents and warrants that he has complied and shall comply with all requirements of local, state, and national laws; that no legal requirement has been or shall be violated in making or accepting this bid, in awarding the contract to him or in the prosecution of the work required; that the bid is legal and firm; that he has not, directly or indirectly, entered into any agreement, participated in any collusion, or otherwise taken action in restraint of free competitive bidding.

Upon receipt of written notice of the acceptance of this Bid, the Bidder shall, within twenty (20) calendar days, execute the agreement in the required form and deliver the Contract Bonds, and Insurance Certificates, required by the Contract Documents.

I am / We are an Individual / a Partnership / a Corporation

By _____ Trading as _____
(Individual's / General Partner's / Corporate Name)

_____
(State of Corporation)

Business Address:_____
_____
_____
_____

Witness: _____ By: _____
(Authorized Signature)

(SEAL) _____
(Title)

Date: _____

ATTACHMENTS

Sub-Contractor List
Non-Collusion Statement
Bid Bond
Consent of Surety
Delaware Business License
(Others as Required by Project Manuals)

SUBCONTRACTOR LIST

In accordance with Title 29, Chapter 6962 (d)(10)b Delaware Code, the following sub-contractor listing must accompany the bid submittal. The name and address of the sub-contractor must be listed for each category where the bidder intends to use a sub-contractor to perform that category of work. In order to provide full disclosure and acceptance of the bid by the Owner, **it is required that bidders list themselves as being the sub-contractor for all categories where he/she is qualified and intends to perform such work.**

Subcontractor Category	Subcontractor **Subcontractors tax payer ID #** **or Delaware Business license #**	Address (City & State)
1. Painting	_____	_____

NON-COLLUSION STATEMENT

This is to certify that the undersigned bidder has neither directly nor indirectly, entered into any agreement, participated in any collusion or otherwise taken any action in restraint of free competitive bidding in connection with this proposal submitted this date _____.

All the terms and conditions of A-10, Painting have been thoroughly examined and are understood.

NAME OF BIDDER: _____

AUTHORIZED REPRESENTATIVE (TYPED): _____

AUTHORIZED REPRESENTATIVE (SIGNATURE): _____

TITLE: _____

ADDRESS OF BIDDER: _____

_____

_____

PHONE NUMBER: _____

Sworn to and Subscribed before me this _____ day of _____ 20____.

My Commission expires _____. NOTARY PUBLIC _____.

THIS PAGE MUST BE SIGNED AND NOTARIZED FOR YOUR BID TO BE CONSIDERED.

BID BOND

TO ACCOMPANY PROPOSAL
(Not necessary if security is used)

KNOW ALL MEN BY THESE PRESENTS That: _____of _____in the County of _____ and State of _____ as Principal, and _____of _____in the County of _____ _____ and State of _____ as Surety, legally authorized to do business in the State of Delaware ('State"), are held and firmly unto the Indian River School District in the sum of _____ Dollars (S_____), or percent not to exceed _____ Dollars (S_____) of amount of bid on Contract No. _____ to be paid to the Indian River School District for the use and benefit of the Indian River School District for which payment well and truly to be made, we do bind ourselves, our and each of our heirs, executors, administrators, and successors, jointly and severally for and in the whole firmly by these presents.

NOW THE CONDITION OF THIS OBLIGATION IS SUCH That if the above bounden Principal who has submitted to the Indian River School District a certain proposal to enter into this contract for the furnishing of certain material and/or services within the State, shall be awarded this Contract, and if said Principal shall well and truly enter into and execute this Contract as may be required by the terms of this Contract and approved by the Indian River School District this Contract to be entered into within twenty days after the date of official notice of the award thereof in accordance with the terms of said proposal, then this obligation shall be void or else to be and remain in full force and virtue.

Sealed with _____seal and dated this____day of _____in the year of our Lord two thousand and _____(20__).

SEALED, AND DELIVERED IN THE PRESENCE OF

_____
Name of Bidder (Organization)

Corporate Seal

By:_____
Authorized Signature

Attest _____

_____
Title

_____
Name of Surety

Witness_____

_____

_____
Title

CONSENT OF SURETY

DATE_____

To: Indian River School District
31 Hosier Street
Selbyville, DE 19975

Gentlemen:

We, the _____

_____
(Surety Company's Address)

_____

a Surety Company authorized to do business in the State of Delaware hereby agrees that if

_____
(Contractor)

_____
(Address)

_____

is awarded the Contract No. _____

We will write the required Performance and/or Labor and Material Bond required by Paragraph 9 of the Instructions to Bidders.

_____
(Surety Company)

By _____
(Attorney-in-Fact)

END OF SECTION

Indian River School District
Referendum 2013
Georgetown Elementary School Classroom & Kitchen Additions

A-011: Kitchen Equipment

BID FORM

For Bids Due: _____ To: Indian River School District
31 Hosier Street
Selbyville, DE 19975

Name of Bidder: _____

Bidder Address: _____

_____

Contact Name: _____ E-Mail Address: _____

Delaware Business License No.:_____ Taxpayer ID No.: _____

(Other License Nos.): _____
(A copy of Bidder's Delaware Business License must be attached to this form.)

Phone No.: ( ) _____ - _____ Fax No.: ( ) _____ - _____

The undersigned, representing that he has read and understands the Bidding Documents and that this bid is made in accordance therewith, that he has visited the site and has familiarized himself with the local conditions under which the Work is to be performed, and that his bid is based upon the materials, systems and equipment described in the Bidding Documents without exception, hereby proposes and agrees to provide all labor, materials, plant, equipment, supplies, transport and other facilities required to execute the work described by the aforesaid documents for the lump sum itemized below:

$_____ ($_____)

ALTERNATES
Alternate prices conform to applicable project specification section. Refer to specifications for a complete description of the following Alternates. An "ADD" or "DEDUCT" amount is indicated by the crossed out part that does not apply.

A. Alternate No. 1: Additional striping of the front parking lot.
   1. Base Bid: Removal of striping in the existing northeast parking lot adjacent to the classroom additions according to Sheet C-101 of the contract documents. Striping of 18 parking spaces and pavement markings as shown on sheet C-201 of the contract documents.
   2. Alternate: Remove the remaining existing striping within the existing northeast parking lot adjacent to the classroom additions on sheet C-202 of the contract documents. Additional restriping of the spaces and pavement marking within the existing northeast parking lot as shown on sheet C-202 of the contract documents and not included in the base bid on sheet C-201 of the contract documents.

Add/Deduct_____($_____)

B. Alternate No. 2: Seal coat front parking lot

1. Base Bid: Removal of striping in the existing northeast parking lot adjacent to the classroom additions according to Sheet C-101 of the contract documents. Striping of 18 parking spaces and pavement markings as shown on sheet C-201 of the contract documents.
2. Alternate: Seal coating 46,610 sqft of the existing northeast parking lot as shown on sheet C-202 of the contract documents. Additional restriping of the spaces and pavement marking within the existing northeast parking lot as shown on sheet C-202 of the contract documents and not included in the base bid on sheet C-201 of the contract documents.

Add/Deduct_____($_____)

C. Alternate No. 3: Mill and overlay front parking lot

1. Base Bid: Removal of striping in the existing northeast parking lot adjacent to the classroom additions according to Sheet C-101 of the contract documents. Striping of 18 parking spaces and pavement markings as shown on sheet C-201 of the contract documents.
2. Alternate: Sawcut and rotomill 46,610 sqft of the existing northeast parking lot as shown on sheet C-202 of the contract documents. Additional restriping of the spaces and pavement marking within the existing northeast parking lot as shown on sheet C-202 of the contract documents and not included in the base bid on sheet C-201 of the contract documents.

Add/Deduct _____($_____)

D. Alternate No. 4: Multipurpose Room Finishes

1. Base Bid: At Multipurpose Room #132, existing finish flooring remain; patch and replace tiles at removed serving lines; and walls repainted, as indicated on Sheet.
2. Alternate: In lieu of base bid, provide new finish flooring and wall finishes as indicated on Sheets A107 and A601.

Add/Deduct _____($_____)

E. Alternate No. 5: Existing Stair Tread/Riser and Landing.

1. Base Bid: At Stair 127/218, repaint existing stair risers and VCT on treads and landing remains, as indicated on Sheet A103.
2. Alternate: In lieu of base bid, remove VCT at landing and provide rubber tile, and provide new rubber stair tread with integral risers as indicated on Sheet A103 and Section 096513.

Add/Deduct _____($_____)

UNIT PRICES

Unit prices conform to applicable project specification section. Refer to the specifications for a complete description of the following Unit Prices:

A. Unit Price No. 1: Removal of unsatisfactory soil and replacement and installation of satisfactory soil material.
   1. Description: Unsatisfactory soil excavation and disposal off site and replacement with satisfactory fill material or engineered fill from off site, as required, according to Section 312000 "Earth Moving."
   2. Unit of Measurement: Cubic yard of soil excavated, based on survey of volume removed.

   Add_____($_____) Deduct_____($_____)

B. Unit Price No. 2: Full depth pavement patch.
   1. Description: Saw cutting and removal of complete pavement section and unsuitable subsoils in the areas of pavement above and beyond the base bid as shown on the contract documents. Complete replacement and installation of pavement section in accordance with the "On-Site Pavement Section" detail provided on sheet C-902 of the contract documents.
   2. Unit of Measurement: Square foot of pavement area, based on survey of area removed.

   Add_____($_____) Deduct_____($_____)

C. Unit Price No. 3: 2" Mill and overlay.
   1. Description: Additional 2" milling of existing pavement by contactor and installation of a 2" overlay above and beyond the base bid as shown on the contract documents.
   2. Unit of Measurement: square foot of area to be milled, based on survey of area removed.

   Add_____($_____) Deduct_____($_____)

D. Unit Price No. 4: Seal Coating Pavement area.
   1. Description: Additional seal coating of parking surfaces and marking in addition to the area specified by the Alternate no. 2.
   2. Unit of Measurement: Square foot.

   Add_____($_____) Deduct_____($_____)

NOTE: The difference in price between Add and Deduct in the above Unit Prices should not exceed fifteen percent (15%).

I/We acknowledge Addendums numbered _____ and the price(s) submitted include any cost/schedule impact they may have.

This bid shall remain valid and cannot be withdrawn for sixty (60) days from the date of opening of bids, and the undersigned shall abide by the Bid Security forfeiture provisions. Bid Security is attached to this Bid (if required).

The Owner shall have the right to reject any or all bids, and to waive any informality or irregularity in any bid received.

This bid is based upon work being accomplished by the Sub-Contractors named on the list attached to this bid.

The undersigned represents and warrants that he has complied and shall comply with all requirements of local, state, and national laws; that no legal requirement has been or shall be violated in making or accepting this bid, in awarding the contract to him or in the prosecution of the work required; that the bid is legal and firm; that he has not, directly or indirectly, entered into any agreement, participated in any collusion, or otherwise taken action in restraint of free competitive bidding.

Upon receipt of written notice of the acceptance of this Bid, the Bidder shall, within twenty (20) calendar days, execute the agreement in the required form and deliver the Contract Bonds, and Insurance Certificates, required by the Contract Documents.

I am / We are an Individual / a Partnership / a Corporation

By _____ Trading as _____
(Individual's / General Partner's / Corporate Name)

_____
(State of Corporation)

Business Address:_____
_____
_____
_____

Witness: _____ By: _____
(Authorized Signature)

(SEAL) _____
(Title)

Date: _____

ATTACHMENTS

Sub-Contractor List
Non-Collusion Statement
Bid Bond
Consent of Surety
Delaware Business License
(Others as Required by Project Manuals)

SUBCONTRACTOR LIST

In accordance with Title 29, Chapter 6962 (d)(10)b Delaware Code, the following sub-contractor listing must accompany the bid submittal. The name and address of the sub-contractor must be listed for each category where the bidder intends to use a sub-contractor to perform that category of work. In order to provide full disclosure and acceptance of the bid by the Owner, **it is required that bidders list themselves as being the sub-contractor for all categories where he/she is qualified and intends to perform such work.**

Subcontractor Category	Subcontractor **Subcontractors tax payer ID #** **or Delaware Business license #**	Address (City & State)
1. Kitchen Equipment	_____	_____

NON-COLLUSION STATEMENT

This is to certify that the undersigned bidder has neither directly nor indirectly, entered into any agreement, participated in any collusion or otherwise taken any action in restraint of free competitive bidding in connection with this proposal submitted this date _____.

All the terms and conditions of A-11, Kitchen Equipment have been thoroughly examined and are understood.

NAME OF BIDDER: _____

AUTHORIZED REPRESENTATIVE (TYPED): _____

AUTHORIZED REPRESENTATIVE (SIGNATURE): _____

TITLE: _____

ADDRESS OF BIDDER: _____

_____

_____

PHONE NUMBER: _____

Sworn to and Subscribed before me this _____ day of _____ 20____.

My Commission expires _____. NOTARY PUBLIC _____.

THIS PAGE MUST BE SIGNED AND NOTARIZED FOR YOUR BID TO BE CONSIDERED.

BID BOND

TO ACCOMPANY PROPOSAL
(Not necessary if security is used)

KNOW ALL MEN BY THESE PRESENTS That: _____of _____in the County of _____ and State of _____ as Principal, and _____of _____in the County of _____ _____ and State of _____ as Surety, legally authorized to do business in the State of Delaware ('State"), are held and firmly unto the Indian River School District in the sum of _____ Dollars (S_____), or percent not to exceed _____ Dollars (S_____) of amount of bid on Contract No. _____ to be paid to the Indian River School District for the use and benefit of the Indian River School District for which payment well and truly to be made, we do bind ourselves, our and each of our heirs, executors, administrators, and successors, jointly and severally for and in the whole firmly by these presents.

NOW THE CONDITION OF THIS OBLIGATION IS SUCH That if the above bounden Principal who has submitted to the Indian River School District a certain proposal to enter into this contract for the furnishing of certain material and/or services within the State, shall be awarded this Contract, and if said Principal shall well and truly enter into and execute this Contract as may be required by the terms of this Contract and approved by the Indian River School District this Contract to be entered into within twenty days after the date of official notice of the award thereof in accordance with the terms of said proposal, then this obligation shall be void or else to be and remain in full force and virtue.

Sealed with _____seal and dated this____day of _____in the year of our Lord two thousand and _____(20__).

SEALED, AND DELIVERED IN THE PRESENCE OF

_____
Name of Bidder (Organization)

Corporate Seal

By:_____
Authorized Signature

Attest _____

_____
Title

_____
Name of Surety

Witness_____

_____

_____
Title

CONSENT OF SURETY

DATE_____

To: Indian River School District
31 Hosier Street
Selbyville, DE 19975

Gentlemen:

We, the _____

_____
(Surety Company's Address)

_____

a Surety Company authorized to do business in the State of Delaware hereby agrees that if

_____
(Contractor)

_____
(Address)

_____

is awarded the Contract No. _____

We will write the required Performance and/or Labor and Material Bond required by Paragraph 9 of the Instructions to Bidders.

_____
(Surety Company)

By _____
(Attorney-in-Fact)

END OF SECTION

A-012: Fire Protection

BID FORM

For Bids Due: _____ To: Indian River School District
31 Hosier Street
Selbyville, DE 19975

Name of Bidder: _____

Bidder Address: _____

_____

Contact Name: _____ E-Mail Address: _____

Delaware Business License No.: _____ Taxpayer ID No.: _____

(Other License Nos.): _____
(A copy of Bidder's Delaware Business License must be attached to this form.)

Phone No.: ( ) _____ - _____ Fax No.: ( ) _____ - _____

The undersigned, representing that he has read and understands the Bidding Documents and that this bid is made in accordance therewith, that he has visited the site and has familiarized himself with the local conditions under which the Work is to be performed, and that his bid is based upon the materials, systems and equipment described in the Bidding Documents without exception, hereby proposes and agrees to provide all labor, materials, plant, equipment, supplies, transport and other facilities required to execute the work described by the aforesaid documents for the lump sum itemized below:

$_____ ($_____)

ALTERNATES
Alternate prices conform to applicable project specification section. Refer to specifications for a complete description of the following Alternates. An "ADD" or "DEDUCT" amount is indicated by the crossed out part that does not apply.

A. Alternate No. 1: Additional striping of the front parking lot.
   1. Base Bid: Removal of striping in the existing northeast parking lot adjacent to the classroom additions according to Sheet C-101 of the contract documents. Striping of 18 parking spaces and pavement markings as shown on sheet C-201 of the contract documents.
   2. Alternate: Remove the remaining existing striping within the existing northeast parking lot adjacent to the classroom additions on sheet C-202 of the contract documents. Additional restriping of the spaces and pavement marking within the existing northeast parking lot as shown on sheet C-202 of the contract documents and not included in the base bid on sheet C-201 of the contract documents.

Add/Deduct_____($_____)

B. Alternate No. 2: Seal coat front parking lot

1. Base Bid: Removal of striping in the existing northeast parking lot adjacent to the classroom additions according to Sheet C-101 of the contract documents. Striping of 18 parking spaces and pavement markings as shown on sheet C-201 of the contract documents.
2. Alternate: Seal coating 46,610 sqft of the existing northeast parking lot as shown on sheet C-202 of the contract documents. Additional restriping of the spaces and pavement marking within the existing northeast parking lot as shown on sheet C-202 of the contract documents and not included in the base bid on sheet C-201 of the contract documents.

Add/Deduct_____($_____)

C. Alternate No. 3: Mill and overlay front parking lot

1. Base Bid: Removal of striping in the existing northeast parking lot adjacent to the classroom additions according to Sheet C-101 of the contract documents. Striping of 18 parking spaces and pavement markings as shown on sheet C-201 of the contract documents.
2. Alternate: Sawcut and rotomill 46,610 sqft of the existing northeast parking lot as shown on sheet C-202 of the contract documents. Additional restriping of the spaces and pavement marking within the existing northeast parking lot as shown on sheet C-202 of the contract documents and not included in the base bid on sheet C-201 of the contract documents.

Add/Deduct _____($_____)

D. Alternate No. 4: Multipurpose Room Finishes

1. Base Bid: At Multipurpose Room #132, existing finish flooring remain; patch and replace tiles at removed serving lines; and walls repainted, as indicated on Sheet.
2. Alternate: In lieu of base bid, provide new finish flooring and wall finishes as indicated on Sheets A107 and A601.

Add/Deduct _____($_____)

E. Alternate No. 5: Existing Stair Tread/Riser and Landing.

1. Base Bid: At Stair 127/218, repaint existing stair risers and VCT on treads and landing remains, as indicated on Sheet A103.
2. Alternate: In lieu of base bid, remove VCT at landing and provide rubber tile, and provide new rubber stair tread with integral risers as indicated on Sheet A103 and Section 096513.

Add/Deduct _____($_____)

UNIT PRICES

Unit prices conform to applicable project specification section. Refer to the specifications for a complete description of the following Unit Prices:

A. Unit Price No. 1: Removal of unsatisfactory soil and replacement and installation of satisfactory soil material.
   1. Description: Unsatisfactory soil excavation and disposal off site and replacement with satisfactory fill material or engineered fill from off site, as required, according to Section 312000 "Earth Moving."
   2. Unit of Measurement: Cubic yard of soil excavated, based on survey of volume removed.

   Add_____($_____) Deduct_____($_____)

B. Unit Price No. 2: Full depth pavement patch.
   1. Description: Saw cutting and removal of complete pavement section and unsuitable subsoils in the areas of pavement above and beyond the base bid as shown on the contract documents. Complete replacement and installation of pavement section in accordance with the "On-Site Pavement Section" detail provided on sheet C-902 of the contract documents.
   2. Unit of Measurement: Square foot of pavement area, based on survey of area removed.

   Add_____($_____) Deduct_____($_____)

C. Unit Price No. 3: 2" Mill and overlay.
   1. Description: Additional 2" milling of existing pavement by contactor and installation of a 2" overlay above and beyond the base bid as shown on the contract documents.
   2. Unit of Measurement: square foot of area to be milled, based on survey of area removed.

   Add_____($_____) Deduct_____($_____)

D. Unit Price No. 4: Seal Coating Pavement area.
   1. Description: Additional seal coating of parking surfaces and marking in addition to the area specified by the Alternate no. 2.
   2. Unit of Measurement: Square foot.

   Add_____($_____) Deduct_____($_____)

NOTE: The difference in price between Add and Deduct in the above Unit Prices should not exceed fifteen percent (15%).

I/We acknowledge Addendums numbered _____ and the price(s) submitted include any cost/schedule impact they may have.

This bid shall remain valid and cannot be withdrawn for sixty (60) days from the date of opening of bids, and the undersigned shall abide by the Bid Security forfeiture provisions. Bid Security is attached to this Bid (if required).

The Owner shall have the right to reject any or all bids, and to waive any informality or irregularity in any bid received.

This bid is based upon work being accomplished by the Sub-Contractors named on the list attached to this bid.

The undersigned represents and warrants that he has complied and shall comply with all requirements of local, state, and national laws; that no legal requirement has been or shall be violated in making or accepting this bid, in awarding the contract to him or in the prosecution of the work required; that the bid is legal and firm; that he has not, directly or indirectly, entered into any agreement, participated in any collusion, or otherwise taken action in restraint of free competitive bidding.

Upon receipt of written notice of the acceptance of this Bid, the Bidder shall, within twenty (20) calendar days, execute the agreement in the required form and deliver the Contract Bonds, and Insurance Certificates, required by the Contract Documents.

I am / We are an Individual / a Partnership / a Corporation

By _____ Trading as _____
(Individual's / General Partner's / Corporate Name)

_____
(State of Corporation)

Business Address:_____
_____
_____
_____

Witness: _____ By: _____
(Authorized Signature)

(SEAL) _____
(Title)

Date: _____

ATTACHMENTS

Sub-Contractor List
Non-Collusion Statement
Bid Bond
Consent of Surety
Delaware Business License
(Others as Required by Project Manuals)

SUBCONTRACTOR LIST

In accordance with Title 29, Chapter 6962 (d)(10)b Delaware Code, the following sub-contractor listing must accompany the bid submittal. The name and address of the sub-contractor must be listed for each category where the bidder intends to use a sub-contractor to perform that category of work. In order to provide full disclosure and acceptance of the bid by the Owner, **it is required that bidders list themselves as being the sub-contractor for all categories where he/she is qualified and intends to perform such work.**

Subcontractor Category	Subcontractor **Subcontractors tax payer ID #** **or Delaware Business license #**	Address (City & State)
1. Fire Protection		

NON-COLLUSION STATEMENT

This is to certify that the undersigned bidder has neither directly nor indirectly, entered into any agreement, participated in any collusion or otherwise taken any action in restraint of free competitive bidding in connection with this proposal submitted this date _____.

All the terms and conditions of A-12, Fire Protection have been thoroughly examined and are understood.

NAME OF BIDDER: _____

AUTHORIZED REPRESENTATIVE (TYPED): _____

AUTHORIZED REPRESENTATIVE (SIGNATURE): _____

TITLE: _____

ADDRESS OF BIDDER: _____

_____

_____

PHONE NUMBER: _____

Sworn to and Subscribed before me this _____ day of _____ 20____.

My Commission expires _____. NOTARY PUBLIC _____.

THIS PAGE MUST BE SIGNED AND NOTARIZED FOR YOUR BID TO BE CONSIDERED.

BID BOND

TO ACCOMPANY PROPOSAL
(Not necessary if security is used)

KNOW ALL MEN BY THESE PRESENTS That: _____of _____in the County of _____ and State of _____ as Principal, and _____of _____in the County of _____ _____ and State of _____ as Surety, legally authorized to do business in the State of Delaware ('State"), are held and firmly unto the Indian River School District in the sum of _____ Dollars (S_____), or percent not to exceed _____ Dollars (S_____) of amount of bid on Contract No. _____ to be paid to the Indian River School District for the use and benefit of the Indian River School District for which payment well and truly to be made, we do bind ourselves, our and each of our heirs, executors, administrators, and successors, jointly and severally for and in the whole firmly by these presents.

NOW THE CONDITION OF THIS OBLIGATION IS SUCH That if the above bounden Principal who has submitted to the Indian River School District a certain proposal to enter into this contract for the furnishing of certain material and/or services within the State, shall be awarded this Contract, and if said Principal shall well and truly enter into and execute this Contract as may be required by the terms of this Contract and approved by the Indian River School District this Contract to be entered into within twenty days after the date of official notice of the award thereof in accordance with the terms of said proposal, then this obligation shall be void or else to be and remain in full force and virtue.

Sealed with _____seal and dated this____day of _____in the year of our Lord two thousand and _____(20__).

SEALED, AND DELIVERED IN THE PRESENCE OF

_____
Name of Bidder (Organization)

Corporate Seal

By:_____
Authorized Signature

Attest _____

_____
Title

_____
Name of Surety

Witness_____

_____

_____
Title

CONSENT OF SURETY

DATE_____

To: Indian River School District
31 Hosier Street
Selbyville, DE 19975

Gentlemen:

We, the _____

_____
(Surety Company's Address)

_____

a Surety Company authorized to do business in the State of Delaware hereby agrees that if

_____
(Contractor)

_____
(Address)

_____

is awarded the Contract No. _____

We will write the required Performance and/or Labor and Material Bond required by Paragraph 9 of the Instructions to Bidders.

_____
(Surety Company)

By _____
(Attorney-in-Fact)

END OF SECTION

Indian River School District
Referendum 2013
Georgetown Elementary School Classroom & Kitchen Additions

A-013: Mechanical

BID FORM

For Bids Due: _____ To: Indian River School District
31 Hosier Street
Selbyville, DE 19975

Name of Bidder: _____

Bidder Address: _____

_____

Contact Name: _____ E-Mail Address: _____

Delaware Business License No.:_____ Taxpayer ID No.: _____

(Other License Nos.): _____
(A copy of Bidder's Delaware Business License must be attached to this form.)

Phone No.: ( ) _____ - _____ Fax No.: ( ) _____ - _____

The undersigned, representing that he has read and understands the Bidding Documents and that this bid is made in accordance therewith, that he has visited the site and has familiarized himself with the local conditions under which the Work is to be performed, and that his bid is based upon the materials, systems and equipment described in the Bidding Documents without exception, hereby proposes and agrees to provide all labor, materials, plant, equipment, supplies, transport and other facilities required to execute the work described by the aforesaid documents for the lump sum itemized below:

$_____ ($_____)

ALTERNATES
Alternate prices conform to applicable project specification section. Refer to specifications for a complete description of the following Alternates. An "ADD" or "DEDUCT" amount is indicated by the crossed out part that does not apply.

A. Alternate No. 1: Additional striping of the front parking lot.
   1. Base Bid: Removal of striping in the existing northeast parking lot adjacent to the classroom additions according to Sheet C-101 of the contract documents. Striping of 18 parking spaces and pavement markings as shown on sheet C-201 of the contract documents.
   2. Alternate: Remove the remaining existing striping within the existing northeast parking lot adjacent to the classroom additions on sheet C-202 of the contract documents. Additional restriping of the spaces and pavement marking within the existing northeast parking lot as shown on sheet C-202 of the contract documents and not included in the base bid on sheet C-201 of the contract documents.

Add/Deduct_____($_____)

B. Alternate No. 2: Seal coat front parking lot

1. Base Bid: Removal of striping in the existing northeast parking lot adjacent to the classroom additions according to Sheet C-101 of the contract documents. Striping of 18 parking spaces and pavement markings as shown on sheet C-201 of the contract documents.
2. Alternate: Seal coating 46,610 sqft of the existing northeast parking lot as shown on sheet C-202 of the contract documents. Additional restriping of the spaces and pavement marking within the existing northeast parking lot as shown on sheet C-202 of the contract documents and not included in the base bid on sheet C-201 of the contract documents.

Add/Deduct_____($_____)

C. Alternate No. 3: Mill and overlay front parking lot

1. Base Bid: Removal of striping in the existing northeast parking lot adjacent to the classroom additions according to Sheet C-101 of the contract documents. Striping of 18 parking spaces and pavement markings as shown on sheet C-201 of the contract documents.
2. Alternate: Sawcut and rotomill 46,610 sqft of the existing northeast parking lot as shown on sheet C-202 of the contract documents. Additional restriping of the spaces and pavement marking within the existing northeast parking lot as shown on sheet C-202 of the contract documents and not included in the base bid on sheet C-201 of the contract documents.

Add/Deduct _____($_____)

D. Alternate No. 4: Multipurpose Room Finishes

1. Base Bid: At Multipurpose Room #132, existing finish flooring remain; patch and replace tiles at removed serving lines; and walls repainted, as indicated on Sheet.
2. Alternate: In lieu of base bid, provide new finish flooring and wall finishes as indicated on Sheets A107 and A601.

Add/Deduct _____($_____)

E. Alternate No. 5: Existing Stair Tread/Riser and Landing.

1. Base Bid: At Stair 127/218, repaint existing stair risers and VCT on treads and landing remains, as indicated on Sheet A103.
2. Alternate: In lieu of base bid, remove VCT at landing and provide rubber tile, and provide new rubber stair tread with integral risers as indicated on Sheet A103 and Section 096513.

Add/Deduct _____($_____)

UNIT PRICES

Unit prices conform to applicable project specification section. Refer to the specifications for a complete description of the following Unit Prices:

A. Unit Price No. 1: Removal of unsatisfactory soil and replacement and installation of satisfactory soil material.
   1. Description: Unsatisfactory soil excavation and disposal off site and replacement with satisfactory fill material or engineered fill from off site, as required, according to Section 312000 "Earth Moving."
   2. Unit of Measurement: Cubic yard of soil excavated, based on survey of volume removed.

   Add_____($_____) Deduct_____($_____)

B. Unit Price No. 2: Full depth pavement patch.
   1. Description: Saw cutting and removal of complete pavement section and unsuitable subsoils in the areas of pavement above and beyond the base bid as shown on the contract documents. Complete replacement and installation of pavement section in accordance with the "On-Site Pavement Section" detail provided on sheet C-902 of the contract documents.
   2. Unit of Measurement: Square foot of pavement area, based on survey of area removed.

   Add_____($_____) Deduct_____($_____)

C. Unit Price No. 3: 2" Mill and overlay.
   1. Description: Additional 2" milling of existing pavement by contactor and installation of a 2" overlay above and beyond the base bid as shown on the contract documents.
   2. Unit of Measurement: square foot of area to be milled, based on survey of area removed.

   Add_____($_____) Deduct_____($_____)

D. Unit Price No. 4: Seal Coating Pavement area.
   1. Description: Additional seal coating of parking surfaces and marking in addition to the area specified by the Alternate no. 2.
   2. Unit of Measurement: Square foot.

   Add_____($_____) Deduct_____($_____)

NOTE: The difference in price between Add and Deduct in the above Unit Prices should not exceed fifteen percent (15%).

I/We acknowledge Addendums numbered _____ and the price(s) submitted include any cost/schedule impact they may have.

This bid shall remain valid and cannot be withdrawn for sixty (60) days from the date of opening of bids, and the undersigned shall abide by the Bid Security forfeiture provisions. Bid Security is attached to this Bid (if required).

The Owner shall have the right to reject any or all bids, and to waive any informality or irregularity in any bid received.

This bid is based upon work being accomplished by the Sub-Contractors named on the list attached to this bid.

The undersigned represents and warrants that he has complied and shall comply with all requirements of local, state, and national laws; that no legal requirement has been or shall be violated in making or accepting this bid, in awarding the contract to him or in the prosecution of the work required; that the bid is legal and firm; that he has not, directly or indirectly, entered into any agreement, participated in any collusion, or otherwise taken action in restraint of free competitive bidding.

Upon receipt of written notice of the acceptance of this Bid, the Bidder shall, within twenty (20) calendar days, execute the agreement in the required form and deliver the Contract Bonds, and Insurance Certificates, required by the Contract Documents.

I am / We are an Individual / a Partnership / a Corporation

By _____ Trading as _____
(Individual's / General Partner's / Corporate Name)

_____
(State of Corporation)

Business Address:_____
_____
_____
_____

Witness: _____ By: _____
(Authorized Signature)

(SEAL) _____
(Title)

Date: _____

ATTACHMENTS

Sub-Contractor List
Non-Collusion Statement
Bid Bond
Consent of Surety
Delaware Business License
(Others as Required by Project Manuals)

SUBCONTRACTOR LIST

In accordance with Title 29, Chapter 6962 (d)(10)b Delaware Code, the following sub-contractor listing must accompany the bid submittal. The name and address of the sub-contractor must be listed for each category where the bidder intends to use a sub-contractor to perform that category of work. In order to provide full disclosure and acceptance of the bid by the Owner, **it is required that bidders list themselves as being the sub-contractor for all categories where he/she is qualified and intends to perform such work.**

Subcontractor Category	Subcontractor **Subcontractors tax payer ID #** **or Delaware Business license #**	Address (City & State)
1. Mechanical	_____	_____
2. Building Automation System	_____	_____
3. Testing and Balancing	_____	_____

NON-COLLUSION STATEMENT

This is to certify that the undersigned bidder has neither directly nor indirectly, entered into any agreement, participated in any collusion or otherwise taken any action in restraint of free competitive bidding in connection with this proposal submitted this date _____.

All the terms and conditions of A-12, Fire Protection have been thoroughly examined and are understood.

NAME OF BIDDER: _____

AUTHORIZED REPRESENTATIVE (TYPED): _____

AUTHORIZED REPRESENTATIVE (SIGNATURE): _____

TITLE: _____

ADDRESS OF BIDDER: _____

_____

_____

PHONE NUMBER: _____

Sworn to and Subscribed before me this _____ day of _____ 20____.

My Commission expires _____. NOTARY PUBLIC _____.

THIS PAGE MUST BE SIGNED AND NOTARIZED FOR YOUR BID TO BE CONSIDERED.

BID BOND

TO ACCOMPANY PROPOSAL
(Not necessary if security is used)

KNOW ALL MEN BY THESE PRESENTS That: _____of _____in the County of _____ and State of _____ as Principal, and _____of _____in the County of _____ _____ and State of _____ as Surety, legally authorized to do business in the State of Delaware ('State"), are held and firmly unto the Indian River School District in the sum of _____ Dollars (S_____), or percent not to exceed _____ Dollars (S_____) of amount of bid on Contract No. _____ to be paid to the Indian River School District for the use and benefit of the Indian River School District for which payment well and truly to be made, we do bind ourselves, our and each of our heirs, executors, administrators, and successors, jointly and severally for and in the whole firmly by these presents.

NOW THE CONDITION OF THIS OBLIGATION IS SUCH That if the above bounden Principal who has submitted to the Indian River School District a certain proposal to enter into this contract for the furnishing of certain material and/or services within the State, shall be awarded this Contract, and if said Principal shall well and truly enter into and execute this Contract as may be required by the terms of this Contract and approved by the Indian River School District this Contract to be entered into within twenty days after the date of official notice of the award thereof in accordance with the terms of said proposal, then this obligation shall be void or else to be and remain in full force and virtue.

Sealed with _____seal and dated this____day of _____in the year of our Lord two thousand and _____(20__).

SEALED, AND DELIVERED IN THE PRESENCE OF

_____
Name of Bidder (Organization)

Corporate Seal

By:_____
Authorized Signature

Attest _____

_____
Title

_____
Name of Surety

Witness_____

_____

_____
Title

CONSENT OF SURETY

DATE_____

To: Indian River School District
31 Hosier Street
Selbyville, DE 19975

Gentlemen:

We, the _____

_____
(Surety Company's Address)

_____

a Surety Company authorized to do business in the State of Delaware hereby agrees that if

_____
(Contractor)

_____
(Address)

_____

is awarded the Contract No. _____

We will write the required Performance and/or Labor and Material Bond required by Paragraph 9 of the Instructions to Bidders.

_____
(Surety Company)

By _____
(Attorney-in-Fact)

END OF SECTION

Indian River School District
Referendum 2013
Georgetown Elementary School Classroom & Kitchen Additions

A-014: Electrical

BID FORM

For Bids Due: _____ To: Indian River School District
31 Hosier Street
Selbyville, DE 19975

Name of Bidder: _____

Bidder Address: _____

_____

Contact Name: _____ E-Mail Address: _____

Delaware Business License No.:_____ Taxpayer ID No.: _____

(Other License Nos.): _____
(A copy of Bidder's Delaware Business License must be attached to this form.)

Phone No.: ( ) _____ - _____ Fax No.: ( ) _____ - _____

The undersigned, representing that he has read and understands the Bidding Documents and that this bid is made in accordance therewith, that he has visited the site and has familiarized himself with the local conditions under which the Work is to be performed, and that his bid is based upon the materials, systems and equipment described in the Bidding Documents without exception, hereby proposes and agrees to provide all labor, materials, plant, equipment, supplies, transport and other facilities required to execute the work described by the aforesaid documents for the lump sum itemized below:

$_____ ($_____)

ALTERNATES
Alternate prices conform to applicable project specification section. Refer to specifications for a complete description of the following Alternates. An "ADD" or "DEDUCT" amount is indicated by the crossed out part that does not apply.

A. Alternate No. 1: Additional striping of the front parking lot.
   1. Base Bid: Removal of striping in the existing northeast parking lot adjacent to the classroom additions according to Sheet C-101 of the contract documents. Striping of 18 parking spaces and pavement markings as shown on sheet C-201 of the contract documents.
   2. Alternate: Remove the remaining existing striping within the existing northeast parking lot adjacent to the classroom additions on sheet C-202 of the contract documents. Additional restriping of the spaces and pavement marking within the existing northeast parking lot as shown on sheet C-202 of the contract documents and not included in the base bid on sheet C-201 of the contract documents.

Add/Deduct_____($_____)

B. Alternate No. 2: Seal coat front parking lot

1. Base Bid: Removal of striping in the existing northeast parking lot adjacent to the classroom additions according to Sheet C-101 of the contract documents. Striping of 18 parking spaces and pavement markings as shown on sheet C-201 of the contract documents.
2. Alternate: Seal coating 46,610 sqft of the existing northeast parking lot as shown on sheet C-202 of the contract documents. Additional restriping of the spaces and pavement marking within the existing northeast parking lot as shown on sheet C-202 of the contract documents and not included in the base bid on sheet C-201 of the contract documents.

Add/Deduct_____($_____)

C. Alternate No. 3: Mill and overlay front parking lot

1. Base Bid: Removal of striping in the existing northeast parking lot adjacent to the classroom additions according to Sheet C-101 of the contract documents. Striping of 18 parking spaces and pavement markings as shown on sheet C-201 of the contract documents.
2. Alternate: Sawcut and rotomill 46,610 sqft of the existing northeast parking lot as shown on sheet C-202 of the contract documents. Additional restriping of the spaces and pavement marking within the existing northeast parking lot as shown on sheet C-202 of the contract documents and not included in the base bid on sheet C-201 of the contract documents.

Add/Deduct _____($_____)

D. Alternate No. 4: Multipurpose Room Finishes

1. Base Bid: At Multipurpose Room #132, existing finish flooring remain; patch and replace tiles at removed serving lines; and walls repainted, as indicated on Sheet.
2. Alternate: In lieu of base bid, provide new finish flooring and wall finishes as indicated on Sheets A107 and A601.

Add/Deduct _____($_____)

E. Alternate No. 5: Existing Stair Tread/Riser and Landing.

1. Base Bid: At Stair 127/218, repaint existing stair risers and VCT on treads and landing remains, as indicated on Sheet A103.
2. Alternate: In lieu of base bid, remove VCT at landing and provide rubber tile, and provide new rubber stair tread with integral risers as indicated on Sheet A103 and Section 096513.

Add/Deduct _____($_____)

UNIT PRICES

Unit prices conform to applicable project specification section. Refer to the specifications for a complete description of the following Unit Prices:

A. Unit Price No. 1: Removal of unsatisfactory soil and replacement and installation of satisfactory soil material.
   1. Description: Unsatisfactory soil excavation and disposal off site and replacement with satisfactory fill material or engineered fill from off site, as required, according to Section 312000 "Earth Moving."
   2. Unit of Measurement: Cubic yard of soil excavated, based on survey of volume removed.

   Add_____($_____) Deduct_____($_____)

B. Unit Price No. 2: Full depth pavement patch.
   1. Description: Saw cutting and removal of complete pavement section and unsuitable subsoils in the areas of pavement above and beyond the base bid as shown on the contract documents. Complete replacement and installation of pavement section in accordance with the "On-Site Pavement Section" detail provided on sheet C-902 of the contract documents.
   2. Unit of Measurement: Square foot of pavement area, based on survey of area removed.

   Add_____($_____) Deduct_____($_____)

C. Unit Price No. 3: 2" Mill and overlay.
   1. Description: Additional 2" milling of existing pavement by contactor and installation of a 2" overlay above and beyond the base bid as shown on the contract documents.
   2. Unit of Measurement: square foot of area to be milled, based on survey of area removed.

   Add_____($_____) Deduct_____($_____)

D. Unit Price No. 4: Seal Coating Pavement area.
   1. Description: Additional seal coating of parking surfaces and marking in addition to the area specified by the Alternate no. 2.
   2. Unit of Measurement: Square foot.

   Add_____($_____) Deduct_____($_____)

NOTE: The difference in price between Add and Deduct in the above Unit Prices should not exceed fifteen percent (15%).

I/We acknowledge Addendums numbered _____ and the price(s) submitted include any cost/schedule impact they may have.

This bid shall remain valid and cannot be withdrawn for sixty (60) days from the date of opening of bids, and the undersigned shall abide by the Bid Security forfeiture provisions. Bid Security is attached to this Bid (if required).

The Owner shall have the right to reject any or all bids, and to waive any informality or irregularity in any bid received.

This bid is based upon work being accomplished by the Sub-Contractors named on the list attached to this bid.

The undersigned represents and warrants that he has complied and shall comply with all requirements of local, state, and national laws; that no legal requirement has been or shall be violated in making or accepting this bid, in awarding the contract to him or in the prosecution of the work required; that the bid is legal and firm; that he has not, directly or indirectly, entered into any agreement, participated in any collusion, or otherwise taken action in restraint of free competitive bidding.

Upon receipt of written notice of the acceptance of this Bid, the Bidder shall, within twenty (20) calendar days, execute the agreement in the required form and deliver the Contract Bonds, and Insurance Certificates, required by the Contract Documents.

I am / We are an Individual / a Partnership / a Corporation

By _____ Trading as _____
(Individual's / General Partner's / Corporate Name)

_____
(State of Corporation)

Business Address:_____
_____
_____
_____

Witness: _____ By: _____
(Authorized Signature)

(SEAL) _____
(Title)

Date: _____

ATTACHMENTS

Sub-Contractor List
Non-Collusion Statement
Bid Bond
Consent of Surety
Delaware Business License
(Others as Required by Project Manuals)

SUBCONTRACTOR LIST

In accordance with Title 29, Chapter 6962 (d)(10)b Delaware Code, the following sub-contractor listing must accompany the bid submittal. The name and address of the sub-contractor must be listed for each category where the bidder intends to use a sub-contractor to perform that category of work. In order to provide full disclosure and acceptance of the bid by the Owner, **it is required that bidders list themselves as being the sub-contractor for all categories where he/she is qualified and intends to perform such work.**

Subcontractor Category	Subcontractor **Subcontractors tax payer ID #** **or Delaware Business license #**	Address (City & State)
1. Electrical	_____	_____
2. Communications	_____	_____

NON-COLLUSION STATEMENT

This is to certify that the undersigned bidder has neither directly nor indirectly, entered into any agreement, participated in any collusion or otherwise taken any action in restraint of free competitive bidding in connection with this proposal submitted this date _____.

All the terms and conditions of A-12, Fire Protection have been thoroughly examined and are understood.

NAME OF BIDDER: _____

AUTHORIZED REPRESENTATIVE (TYPED): _____

AUTHORIZED REPRESENTATIVE (SIGNATURE): _____

TITLE: _____

ADDRESS OF BIDDER: _____

_____

_____

PHONE NUMBER: _____

Sworn to and Subscribed before me this _____ day of _____ 20____.

My Commission expires _____. NOTARY PUBLIC _____.

THIS PAGE MUST BE SIGNED AND NOTARIZED FOR YOUR BID TO BE CONSIDERED.

BID BOND

TO ACCOMPANY PROPOSAL
(Not necessary if security is used)

KNOW ALL MEN BY THESE PRESENTS That: _____of _____in the County of _____ and State of _____ as Principal, and _____of _____in the County of _____ _____ and State of _____ as Surety, legally authorized to do business in the State of Delaware ('State"), are held and firmly unto the Indian River School District in the sum of _____ Dollars (S_____), or percent not to exceed _____ Dollars (S_____) of amount of bid on Contract No. _____ to be paid to the Indian River School District for the use and benefit of the Indian River School District for which payment well and truly to be made, we do bind ourselves, our and each of our heirs, executors, administrators, and successors, jointly and severally for and in the whole firmly by these presents.

NOW THE CONDITION OF THIS OBLIGATION IS SUCH That if the above bounden Principal who has submitted to the Indian River School District a certain proposal to enter into this contract for the furnishing of certain material and/or services within the State, shall be awarded this Contract, and if said Principal shall well and truly enter into and execute this Contract as may be required by the terms of this Contract and approved by the Indian River School District this Contract to be entered into within twenty days after the date of official notice of the award thereof in accordance with the terms of said proposal, then this obligation shall be void or else to be and remain in full force and virtue.

Sealed with _____seal and dated this____day of _____in the year of our Lord two thousand and _____(20__).

SEALED, AND DELIVERED IN THE PRESENCE OF

_____
Name of Bidder (Organization)

Corporate Seal

By:_____
Authorized Signature

Attest _____

_____
Title

_____
Name of Surety

Witness_____

_____

_____
Title

CONSENT OF SURETY

DATE_____

To: Indian River School District
31 Hosier Street
Selbyville, DE 19975

Gentlemen:

We, the _____

_____
(Surety Company's Address)

_____

a Surety Company authorized to do business in the State of Delaware hereby agrees that if

_____
(Contractor)

_____
(Address)

_____

is awarded the Contract No. _____

We will write the required Performance and/or Labor and Material Bond required by Paragraph 9 of the Instructions to Bidders.

_____
(Surety Company)

By _____
(Attorney-in-Fact)

END OF SECTION

SECTION 005200 - AGREEMENT

1. SUMMARY

1.1. The Agreement Form for this Project is the American Institute of Architects, Standard Form of Agreement between Owner and Contractor, Construction Manager as Advisor, AIA Document A132 - 2009 Edition.

1.2 A copy of AIA Document A132 – 2009 Edition is bound into this Project Manual following this page.

END OF SECTION

AIA® Document A132™ – 2009

Standard Form of Agreement Between Owner and Contractor, Construction Manager as Adviser Edition

AGREEMENT made as of the day of in the year
(In words, indicate day, month and year.)

BETWEEN the Owner:
(Name, legal status, address and other information)

Indian River School District
31 Hosier Street
Selbyville, DE 19975

and the Contractor:
(Paragraphs deleted)

for the following Project:
(Name, location and detailed description)

Indian River School District 2013
Georgetown Elementary School Classroom & Kitchen Additions

The Construction Manager:
(Name, legal status, address and other information)

EDiS Company
110 South Poplar Street
Suite 400
Wilmington, DE 19801

The Architect:
(Name, legal status, address and other information)

Becker Morgan Group
Port Exchange, Suite 300
312 W. Main Street
Salisbury, MD 21801

The Owner and Contractor agree as follows.

ADDITIONS AND DELETIONS:
The author of this document has added information needed for its completion. The author may also have revised the text of the original AIA standard form. An *Additions and Deletions Report* that notes added information as well as revisions to the standard form text is available from the author and should be reviewed. A vertical line in the left margin of this document indicates where the author has added necessary information and where the author has added to or deleted from the original AIA text.

This document has important legal consequences. Consultation with an attorney is encouraged with respect to its completion or modification.

This document is intended to be used in conjunction with AIA Documents A232™–2009, General Conditions of the Contract for Construction, Construction Manager as Adviser Edition; B132™–2009, Standard Form of Agreement Between Owner and Architect, Construction Manager as Adviser Edition; and C132™–2009, Standard Form of Agreement Between Owner and Construction Manager as Adviser.

AIA Document A232™–2009 is adopted in this document by reference. Do not use with other general conditions unless this document is modified.

Init.
/

AIA Document A132™ – 2009 (formerly A101™CMa – 1992). Copyright © 1975, 1980, 1992 and 2009 by The American Institute of Architects. **All rights reserved. WARNING: This AIA® Document is protected by U.S. Copyright Law and International Treaties. Unauthorized reproduction or distribution of this AIA® Document, or any portion of it, may result in severe civil and criminal penalties, and will be prosecuted to the maximum extent possible under the law.** This document was produced by AIA software at 14:23:32 on 04/16/2015 under Order No.1697299329_1 which expires on 01/26/2016, and is not for resale.
User Notes: (1833326958)

TABLE OF ARTICLES

1 THE CONTRACT DOCUMENTS

2 THE WORK OF THIS CONTRACT

3 DATE OF COMMENCEMENT AND SUBSTANTIAL COMPLETION

4 CONTRACT SUM

5 PAYMENTS

6 DISPUTE RESOLUTION

7 TERMINATION OR SUSPENSION

8 MISCELLANEOUS PROVISIONS

9 ENUMERATION OF CONTRACT DOCUMENTS

10 INSURANCE AND BONDS

ARTICLE 1 THE CONTRACT DOCUMENTS

The Contract Documents consist of this Agreement, Conditions of the Contract (General, Supplementary and other Conditions), Drawings, Specifications, Addenda issued prior to execution of this Agreement, other documents listed in this Agreement and Modifications issued after execution of this Agreement, all of which form the Contract, and are as fully a part of the Contract as if attached to this Agreement or repeated herein. The Contract represents the entire and integrated agreement between the parties hereto and supersedes prior negotiations, representations or agreements, either written or oral. An enumeration of the Contract Documents, other than Modifications, appears in Article 9.

ARTICLE 2 THE WORK OF THIS CONTRACT

The Contractor shall fully execute the Work described in the Contract Documents, except as specifically indicated in the Contract Documents to be the responsibility of others.

ARTICLE 3 DATE OF COMMENCEMENT AND SUBSTANTIAL COMPLETION

§ 3.1 The date of commencement of the Work shall be the date of this Agreement unless a different date is stated below or provision is made for the date to be fixed in a notice to proceed issued by the Owner.
(Insert the date of commencement, if it differs from the date of this Agreement or, if applicable, state that the date will be fixed in a notice to proceed.)

If, prior to the commencement of the Work, the Owner requires time to file mortgages, mechanics' liens and other security interests, the Owner's time requirement shall be as follows:

N/A

§ 3.2 The Contract Time shall be measured from the date of commencement.

§ 3.3 The Contractor shall achieve Substantial Completion of the entire Work not later than 7/7/15 from the date of commencement, or as follows:

Init.

/

AIA Document A132™ – 2009 (formerly A101™CMa – 1992). Copyright © 1975, 1980, 1992 and 2009 by The American Institute of Architects. All rights reserved. WARNING: This AIA® Document is protected by U.S. Copyright Law and International Treaties. Unauthorized reproduction or distribution of this AIA® Document, or any portion of it, may result in severe civil and criminal penalties, and will be prosecuted to the maximum extent possible under the law. This document was produced by AIA software at 14:23:32 on 04/16/2015 under Order No.1697299329_1 which expires on 01/26/2016, and is not for resale.
User Notes: (1833326958)

(Insert number of calendar days. Alternatively, a calendar date may be used when coordinated with the date of commencement. If appropriate, insert requirements for earlier Substantial Completion of certain portions of the Work.)

In accordance with the contract documents.

Portion of the Work	Substantial Completion Date
N/A	N/A

, subject to adjustments of this Contract Time as provided in the Contract Documents.
(Insert provisions, if any, for liquidated damages relating to failure to achieve Substantial Completion on time or for bonus payments for early completion of the Work.)

N/A

ARTICLE 4 CONTRACT SUM

§ 4.1 The Owner shall pay the Contractor the Contract Sum in current funds for the Contractor's performance of the Contract. The Contract Sum shall be one of the following:
(Check the appropriate box.)

[X] Stipulated Sum, in accordance with Section 4.2 below

[ ] Cost of the Work plus the Contractor's Fee without a Guaranteed Maximum Price, in accordance with Section 4.3 below

[ ] Cost of the Work plus the Contractor's Fee with a Guaranteed Maximum Price, in accordance with Section 4.4 below

(Based on the selection above, complete Section 4.2, 4.3 or 4.4 below. Based on the selection above, also complete either Section 5.1.4, 5.1.5 or 5.1.6 below.)

§ 4.2 Stipulated Sum

§ 4.2.1 The Stipulated Sum shall be Dollars ($) subject to additions and deletions as provided in the Contract Documents.

§ 4.2.2 The Stipulated Sum is based on the following alternates, if any, which are described in the Contract Documents and are hereby accepted by the Owner:
(State the numbers or other identification of accepted alternates. If the bidding or proposal documents permit the Owner to accept other alternates subsequent to the execution of this Agreement, attach a schedule of such other alternates showing the amount for each and the date when that amount expires.)

§ 4.2.3 Unit prices, if any:
(Identify and state the unit price, and state the quantity limitations, if any, to which the unit price will be applicable.)

Item	Units and Limitations	Price per Unit ($0.00)
In accordance with the contract documents and bid form.		

Init.
/

AIA Document A132™ – 2009 (formerly A101™CMa – 1992). Copyright © 1975, 1980, 1992 and 2009 by The American Institute of Architects. All rights reserved. WARNING: This AIA® Document is protected by U.S. Copyright Law and International Treaties. Unauthorized reproduction or distribution of this AIA® Document, or any portion of it, may result in severe civil and criminal penalties, and will be prosecuted to the maximum extent possible under the law. This document was produced by AIA software at 14:23:32 on 04/16/2015 under Order No.1697299329_1 which expires on 01/26/2016, and is not for resale.
User Notes: (1833326958)

§ 4.2.4 Allowances included in the Stipulated Sum, if any:
(Identify allowance and state exclusions, if any, from the allowance price.)

Item	Allowance
In accordance with the contract documents.	

(Paragraphs deleted)
(Table deleted)
(Paragraphs deleted)
(Table deleted)
(Paragraphs deleted)
(Table deleted)
(Paragraphs deleted)

ARTICLE 5 PAYMENTS

§ 5.1 Progress Payments

§ 5.1.1 Based upon Applications for Payment submitted to the Construction Manager by the Contractor, and upon certification of the Project Application and Project Certificate for Payment or Application for Payment and Certificate for Payment by the Construction Manager and Architect and issuance by the Architect, the Owner shall make progress payments on account of the Contract Sum to the Contractor as provided below and elsewhere in the Contract Documents.

§ 5.1.2 The period covered by each Application for Payment shall be one calendar month ending on the last day of the month, or as follows:

§ 5.1.3 Provided that an Application for Payment is received by the Construction Manager not later than the 25th day of a month, the Owner shall make payment of the certified amount in the Application for Payment to the Contractor not later than the 15th day of the second month following the month being billed (e.g. payment submitted 25 Jan 2015 will be paid by 15 March 2015). If an Application for Payment is received by the Construction Manager after the application date fixed above, payment shall be made by the Owner not later than forty five (45) days after the Construction Manager receives the Application for Payment.
(Federal, state or local laws may require payment within a certain period of time.)

§ 5.1.4 Progress Payments Where the Contract Sum is Based on a Stipulated Sum

§ 5.1.4.1 Each Application for Payment shall be based on the most recent schedule of values submitted by the Contractor in accordance with the Contract Documents. The schedule of values shall allocate the entire Contract Sum among the various portions of the Work and be prepared in such form and supported by such data to substantiate its accuracy as the Construction Manager and Architect may require. This schedule, unless objected to by the Construction Manager or Architect, shall be used as a basis for reviewing the Contractor's Applications for Payment.

§ 5.1.4.2 Applications for Payment shall show the percentage of completion of each portion of the Work as of the end of the period covered by the Application for Payment.

§ 5.1.4.3 Subject to the provisions of the Contract Documents, the amount of each progress payment shall be computed as follows:

Init.
/
AIA Document A132™ – 2009 (formerly A101™CMa – 1992). Copyright © 1975, 1980, 1992 and 2009 by The American Institute of Architects. All rights reserved. WARNING: This AIA® Document is protected by U.S. Copyright Law and International Treaties. Unauthorized reproduction or distribution of this AIA® Document, or any portion of it, may result in severe civil and criminal penalties, and will be prosecuted to the maximum extent possible under the law. This document was produced by AIA software at 14:23:32 on 04/16/2015 under Order No.1697299329_1 which expires on 01/26/2016, and is not for resale.
User Notes: (1833326958)

.1 Take that portion of the Contract Sum properly allocable to completed Work as determined by multiplying the percentage completion of each portion of the Work by the share of the total Contract Sum allocated to that portion of the Work in the schedule of values, less retainage of five percent (5%). Pending final determination of cost to the Owner of changes in the Work, amounts not in dispute may be included as provided in Section 7.3.9 of the General Conditions;

.2 Add that portion of the Contract Sum properly allocable to materials and equipment delivered and suitably stored at the site for subsequent incorporation in the completed construction (or, if approved in advance by the Owner, suitably stored off the site at a location agreed upon in writing), less retainage of five percent (5%);

.3 Subtract the aggregate of previous payments made by the Owner; and

.4 Subtract amounts, if any, for which the Construction Manager or Architect has withheld or nullified a Certificate for Payment as provided in Section 9.5 of the General Conditions.

§ 5.1.4.4 The progress payment amount determined in accordance with Section 5.1.4.3 shall be further modified under the following circumstances:

.1 Add, upon Substantial Completion of the Work, a sum sufficient to increase the total payments to one hundred percent (100%) of the Contract Sum, less such amounts as the Construction Manager recommends and the Architect determines for incomplete Work and unsettled claims; and

.2 Add, if final completion of the Work is thereafter materially delayed through no fault of the Contractor, any additional amounts payable in accordance with Section 9.10.3 of the General Conditions.

§ 5.1.4.5 Reduction or limitation of retainage, if any, shall be as follows:
(If it is intended, prior to Substantial Completion of the entire Work, to reduce or limit the retainage resulting from the percentages inserted in Sections 5.1.4.3.1 and 5.1.4.3.2 above, and this is not explained elsewhere in the Contract Documents, insert here provisions for such reduction or limitation.)

A reduction of retainage shall only occur if a written request is made by the Contractor and approved by the Owner.

(Paragraphs deleted)

§ 5.2 Final Payment

§ 5.2.1 Final payment, constituting the entire unpaid balance of the Contract Sum, shall be made by the Owner to the Contractor when

.1 the Contractor has fully performed the Contract except for the Contractor's responsibility to correct Work as provided in Section 12.2 of AIA Document A232–2009, and to satisfy other requirements, if any, which extend beyond final payment;

.2 the Contractor has submitted a final accounting for the Cost of the Work, pursuant to Exhibit A, Determination of the Cost of the Work when payment is on the basis of the Cost of the Work, with or without a Guaranteed Maximum payment; and

.3 a final Certificate for Payment or Project Certificate for Payment has been issued by the Architect; such final payment shall be made by the Owner not more than 30 days after the issuance of the final Certificate for Payment or Project Certificate for Payment, or as follows:

As described in the contract documents.

ARTICLE 6 DISPUTE RESOLUTION

§ 6.1 Initial Decision Maker

The Architect will serve as Initial Decision Maker pursuant to Section 15.2 of AIA Document A232–2009, unless the parties appoint below another individual, not a party to this Agreement, to serve as Initial Decision Maker.
(If the parties mutually agree, insert the name, address and other contact information of the Initial Decision Maker, if other than the Architect.)

AIA Document A132™ – 2009 (formerly A101™CMa – 1992). Copyright © 1975, 1980, 1992 and 2009 by The American Institute of Architects. **All rights reserved. WARNING: This AIA® Document is protected by U.S. Copyright Law and International Treaties. Unauthorized reproduction or distribution of this AIA® Document, or any portion of it, may result in severe civil and criminal penalties, and will be prosecuted to the maximum extent possible under the law.** This document was produced by AIA software at 14:23:32 on 04/16/2015 under Order No.1697299329_1 which expires on 01/26/2016, and is not for resale.
User Notes:

§ 6.2 Binding Dispute Resolution

For any Claim subject to, but not resolved by, mediation pursuant to Section 15.3 of AIA Document A232–2009, the method of binding dispute resolution shall be as follows:
(Check the appropriate box. If the Owner and Contractor do not select a method of binding dispute resolution below, or do not subsequently agree in writing to a binding dispute resolution method other than litigation, Claims will be resolved by litigation in a court of competent jurisdiction.)

[X] Arbitration pursuant to Section 15.4 of AIA Document A232–2009.

[ ] Litigation in a court of competent jurisdiction.

[ ] Other: *(Specify)*

ARTICLE 7 TERMINATION OR SUSPENSION

§ 7.1 Where the Contract Sum is a Stipulated Sum

§ 7.1.1 The Contract may be terminated by the Owner or the Contractor as provided in Article 14 of AIA Document A232–2009.

§ 7.1.2 The Work may be suspended by the Owner as provided in Article 14 of AIA Document A232–2009.

(Paragraphs deleted)

ARTICLE 8 MISCELLANEOUS PROVISIONS

§ 8.1 Where reference is made in this Agreement to a provision of AIA Document A232–2009 or another Contract Document, the reference refers to that provision as amended or supplemented by other provisions of the Contract Documents.

§ 8.2 Payments due and unpaid under the Contract shall bear interest from the date payment is due at the rate stated below, or in the absence thereof, at the legal rate prevailing from time to time at the place where the Project is located.
(Insert rate of interest agreed upon, if any.)

(Paragraph deleted)

§ 8.3 The Owner's representative:
(Name, address and other information)

§ 8.4 The Contractor's representative:
(Name, address and other information)

§ 8.5 Neither the Owner's nor the Contractor's representative shall be changed without ten days written notice to the other party.

§ 8.6 Other provisions:

Init.
/

AIA Document A132™ – 2009 (formerly A101™CMa – 1992). Copyright © 1975, 1980, 1992 and 2009 by The American Institute of Architects. **All rights reserved. WARNING: This AIA® Document is protected by U.S. Copyright Law and International Treaties. Unauthorized reproduction or distribution of this AIA® Document, or any portion of it, may result in severe civil and criminal penalties, and will be prosecuted to the maximum extent possible under the law.** This document was produced by AIA software at 14:23:32 on 04/16/2015 under Order No.1697299329_1 which expires on 01/26/2016, and is not for resale.
User Notes:

(1833326958)

ARTICLE 9 ENUMERATION OF CONTRACT DOCUMENTS

§ 9.1 The Contract Documents, except for Modifications issued after execution of this Agreement, are enumerated in the sections below.

§ 9.1.1 The Agreement is this executed AIA Document A132–2009, Standard Form of Agreement Between Owner and Contractor, Construction Manager as Adviser Edition.

§ 9.1.2 The General Conditions are, AIA Document A232–2009, General Conditions of the Contract for Construction, Construction Manager as Adviser Edition.

§ 9.1.3 The Supplementary and other Conditions of the Contract:

Document	Title	Date	Pages
A232-2009	Supplementary General Conditions	2 March 2015	

§ 9.1.4 The Specifications:
(Either list the Specifications here or refer to an exhibit attached to this Agreement.)

Section	Title	Date	Pages
Bid Package A	Project Manual	2 March 2015	

§ 9.1.5 The Drawings:
(Either list the Drawings here or refer to an exhibit attached to this Agreement.)

Number	Title	Date
As described in the contract documents.		

§ 9.1.6 The Addenda, if any:

Number	Date	Pages

Portions of Addenda relating to bidding requirements are not part of the Contract Documents unless the bidding requirements are also enumerated in this Article 9.

§ 9.1.7 Additional documents, if any, forming part of the Contract Documents are:

Letter of Intent
Bid Form
(Paragraphs deleted)
State of Delaware Purchase Order

ARTICLE 10 INSURANCE AND BONDS

The Contractor shall purchase and maintain insurance and provide bonds as set forth in Article 11 of AIA Document A232–2009.
(State bonding requirements, if any, and limits of liability for insurance required in Article 11 of AIA Document A232–2009.)

AIA Document A132™ – 2009 (formerly A101™CMa – 1992). Copyright © 1975, 1980, 1992 and 2009 by The American Institute of Architects. **All rights reserved. WARNING: This AIA® Document is protected by U.S. Copyright Law and International Treaties. Unauthorized reproduction or distribution of this AIA® Document, or any portion of it, may result in severe civil and criminal penalties, and will be prosecuted to the maximum extent possible under the law.** This document was produced by AIA software at 14:23:32 on 04/16/2015 under Order No.1697299329_1 which expires on 01/26/2016, and is not for resale.
User Notes:

(1833326958)

Type of Insurance or Bond	Limit of Liability or Bond Amount ($0.00)
Certificate of Insurance	
Performance and Labor & Material Payment Bonds	

This Agreement is entered into as of the day and year first written above.

Indian River School District

OWNER *(Signature)*	CONTRACTOR *(Signature)*
(Printed name and title)	*(Printed name and title)*

AIA Document A132™ – 2009 (formerly A101™CMa – 1992). Copyright © 1975, 1980, 1992 and 2009 by The American Institute of Architects. **All rights reserved. WARNING: This AIA® Document is protected by U.S. Copyright Law and International Treaties. Unauthorized reproduction or distribution of this AIA® Document, or any portion of it, may result in severe civil and criminal penalties, and will be prosecuted to the maximum extent possible under the law.** This document was produced by AIA software at 14:23:32 on 04/16/2015 under Order No.1697299329_1 which expires on 01/26/2016, and is not for resale.
User Notes:

SECTION 006113 – PERFORMANCE AND PAYMENT BONDS

1. PERFORMANCE AND PAYMENT BONDS

1.1 Bonds must be in the following form:

1. Form of Performance Bond (attached).
2. Form of Payment Bond (attached).

SECTION 00 6113 - FORM OF PAYMENT BOND

Bond Number:

KNOW ALL PERSONS BY THESE PRESENTS, that we, _____, as principal ("Principal"), and _____, a _____ corporation, legally authorized to do business in the State of Delaware, as surety ("Surety"), are held and firmly bound unto the State of Delaware, Indian River School District ("Owner"), in the amount of _____ ($_____), to be paid to Owner, for which payment well and truly to be made, we do bind ourselves, our and each and every of our heirs, executors, administrations, successors and assigns, jointly and severally, for and in the whole firmly by these presents.

Sealed with our seals and dated this _____ day of_____, 20____.

NOW THE CONDITION OF THIS OBLIGATION IS SUCH, that if Principal, who has been awarded by Owner that certain contract known as Contract No. _____dated the _____ day of _____, 20__ (the "Contract"), which Contract is incorporated herein by reference, shall well and truly pay all and every person furnishing materials or performing labor or service in and about the performance of the work under the Contract, all and every sums of money due him. her, them or any of them, for all such materials, labor and service for which Principal is liable, shall make good and reimburse Owner sufficient funds to pay such costs in the completion of the Contract as Owner may sustain by reason of any failure or default on the part of Principal, and shall also indemnity and save harmless Owner from all costs, damages and expenses arising out of or by reason of the performance of the Contract and for as long as provided by the Contract; then this obligation shall be void, otherwise to be and remain in full force and effect.

Surety, for value received, for itself and its successors and assigns, hereby stipulates and agrees that the obligation of Surety and its bond shall be in no way impaired or affected by any extension of time, modification, omission, addition or change in or to the Contract or the work to be performed thereunder, or by any payment thereunder before the time required therein, or by any waiver of any provisions thereof, or by any assignment, subletting or other transfer thereof or of any work to be performed or any monies due or to become due thereunder; and Surety hereby waives notice of any and all such extensions, modifications, omissions, additions, changes, payments, waivers, things done and omitted to be done by and in relation to assignees, subcontractors, and other transferees shall have the same effect as to Surety as though done or omitted to be done by or in relation to Principal.

Surety hereby stipulates and agrees that no modifications, omission or additions in or to the terms of the Contract shall in any way whatsoever affect the obligation of Surety and its bond. Any proceeding, legal or equitable, under this Bond may be brought in any court of competent jurisdiction in the State of Delaware. Notices to Surety or Contractor may be mailed or delivered to them at their respective addresses shown below.
IN WITNESS WHEREOF, Principal and Surety have hereunto set their hand and seals, and such

of them as are corporations have caused their corporate seal to be hereto affixed and these presents to be signed by their duly authorized officers, the day and year first above written.

Witness or Attest: PRINCIPAL

By: _____ _____

Name: _____

Title: _____

(Corporate Seal)

Witness or Attest: SURETY

By: _____ _____

Name: _____

Title: _____

(Corporate Seal)

SECTION 00 6113 - FORM OF PERFORMANCE BOND

Bond Number: _____

KNOW ALL PERSONS BY THESE PRESENTS, that we, _____, as principal ("Principal"), and _____, a _____ corporation, legally authorized to do business in the State of Delaware, as surety ("Surety"), are held and firmly bound unto the State of Delaware, Indian River School District ("Owner"), in the amount of_____ ($_____) to be paid to Owner, for which payment well and truly to be made, we do bind ourselves, our and each and every of our heirs, executors, administrations, successors and assigns. jointly and severally, for and in the whole, firmly by these presents.

Sealed with our seals and dated this _____ day of _____, 20_____.

NOW THE CONDITION OF THIS OBLICATION IS SUCH, that if Principal, who has been awarded by Owner that certain contract known as Contract No. _____ dated the _____ day of _____, 20 (the "Contract"), which Contract is incorporated herein by reference, shall well and truly provide and furnish all materials, appliances and tools and perform all the work required under and pursuant to the terms and conditions of the Contract and the Contract Documents (as defined in the Contract) or any changes or modifications thereto made as therein provided, shall make good and reimburse Owner sufficient funds to pay the costs of completing the Contract that Owner may sustain by reason of any failure or default on the part of Principal, and shall also indemnify and save harmless Owner from all costs, damages and expenses arising out of or by reason of the performance of the Contract and for as long as provided by the Contract; then this obligation shall be void, otherwise to be and remain in full force and effect.

Surety, for value received, hereby stipulates and agrees, if requested to do so by Owner, to fully perform and complete the work to be performed under the Contract pursuant to the terms, conditions and covenants thereof, if for any cause Principal fails or neglects to so fully perform and complete such work

Surety, for value received, for itself and its successors and assigns, hereby stipulates and agrees that the obligation of Surety and its bond shall be in no way impaired or affected by any extension of time, modification, omission, addition or change in or to the Contract or the work to be performed thereunder, or by any payment thereunder before the time required therein, or by any waiver of any provisions thereof, or by any assignment, subletting or other transfer thereof or of any work to be performed or any monies due or to become due thereunder; and Surety hereby waives notice of any and all such extensions, modifications, omissions, additions, changes, payments, waivers, assignments, subcontracts and transfers and hereby expressly stipulates and agrees that any and all things done and omitted to be done by and in relation to assignees, subcontractors, and other transferees shall have the same effect as to Surety as though done or omitted to be done by or in relation to Principal.

Surety hereby stipulates and agrees that no modifications, omissions or additions in or to the terms of the Contract shall in any way whatsoever affect the obligation of Surety and its bond.

Any proceeding, legal or equitable, under this Bond may be brought in any court of competent jurisdiction in the State of Delaware. Notices to Surety or Contractor may be mailed or delivered to them at their respective addresses shown below.

IN WITNESS WHEREOF, Principal and Surety have hereunto set their hand and seals, and such of them as are corporations have caused their corporate seal to be hereto affixed and these presents to be signed by their duly authorized officers, the day and year first above written.

Witness or Attest: PRINCIPAL

By: _____ _____

Name: _____

Title: _____

(Corporate Seal)

Witness or Attest: SURETY

By: _____ _____

Name: _____

Title: _____

(Corporate Seal)

END OF SECTION

SECTION 006216 – CERTIFICATE OF INSURANCE

In conjunction with Insurance Requirements AIA General Conditions, Article 11, the Contractor shall be bound by the following limits of liability insurance (for Contracts under this Bid Pac). The Contractor shall use the standard "ACORD" for titled "Certificate of Insurance" in submitting his liability insurance limits. The required limits to be inserted in accordance with the sample "ACORD" form in this section:

GENERAL NOTES

1. Other Insurance

   1.1 Contractor shall carry any necessary insurance required to cover Owned and Rental equipment that may be necessary for them to use in the performance of the Work.

2. Contractor shall have the following additional items added to his required "ACORD" form Certificate of Insurance:

   1. Name and Address of Insured (Contractor).
   2. Description of Operations/Locations -

3. Added Insured – Indian River School District and EDiS Company.

4. Certificate Holder – Indian River School District

Contractors shall note that although not a part of AIA Document A232 - 2009 Edition, these additional articles apply as noted to this Project.

A sample certificate is bound into the Project Manual immediately following this Document.

END OF SECTION

ACORD™ CERTIFICATE OF LIABILITY INSURANCE

DATE (MM/DD/YY) XX/XX/XX

PRODUCER

PRODUCER INSURANCE AGENCY
PO BOX
PRODUCER STREET ADDRESS
PRODUCER CITY, ST PROD ZIP

THIS CERTIFICATE IS ISSUED AS A MATTER OF INFORMATION ONLY AND CONFERS NO RIGHTS UPON THE CERTIFICATE HOLDER. THIS CERTIFICATE DOES NOT AMEND, EXTEND OR ALTER THE COVERAGE AFFORDED BY THE POLICIES BELOW.

INSURERD

SAMPLE SUBCONTRACTOR CERTIFICATE
(REQUIRED MINIMUM INSURANCE)

INSURERS AFFORDING COVERAGE

INSURER A: XXXXXX
INSURED B XXXXXX
INSURER C: XXXXXX
INSURER D:
INSURER E:

COVERAGES

THE POLICIES OF INSURANCE LISTED BELOW HAVE BEEN ISSUED TO THE INSURED NAMED ABOVE FOR THE POLICY PERIOD INDICATED. NOTWITHSTANDING ANY REQUIREMENT, TERM OR CONDITION OF ANY CONTRACT OR OTHER DOCUMENT WITH RESPECT TO WHICH THIS CERTIFICATE MAY BE ISSUED OR MAY PERTAIN, THE INSURANCE AFFORDED BY THE POLICIES DESCRIBED HEREIN IS SUBJECT TO ALL THE TERMS, EXCLUSIONS AND CONDITIONS OF SUCH POLICIES. AGGREGATE LIMITS SHOWN MAY HAVE BEEN REDUCED BY PAID CLAIMS.

INSR LTR	TYPE OF INSURANCE	POLICY NUMBER	POLICY EFFECTIVE DATE (MM/DD/YY)	DATE (MM/YY)	LIMITS	
	GENERAL LIABILITY	XXXXXXXXXXXXXXX	XXXXXXXX	XXXXXXXXXX	EACH OCCURRENCE	$ 1,000,000
	X COMMERCIAL GENERAL LIABILITY				FIRE DAMAGE (Any one fire)	$ 300,000
	CLAIMS MADE X OCCUR				MED EXP (Any one person)	$ 10,000
					PERSONAL & ADV INJURY	$ 1,000,000
					GENERAL AGGREGATE	$ 2,000,000
	GEN'L AGGREGATE LIMIT APPLIES PER: POLICY X PROJECT LOC				PRODUCTS - COMP/OP AGG	$ 2,000,000
	AUTOMOBILE LIABILITY	XXXXXXXXXXXXXXXX	XXXXXXXXXXX	XXXXXXXXXXX	COMBINED SINGLE LIMIT (Ea accident)	$ 1,000,000
	X ANY AUTO				BODILY INJURY (Per person)	$
	ALL OWNED AUTOS					
	SCHEDULED AUTOS				BODILY INJURY (Per accident)	$
	X HIREDAUTOS					
	X NON-OWNED AUTOS				PROPERTY DAMAGE (Per accident)	$
	GARAGE LIABILITY				AUTO ONLY - EA ACCIDENT	$
	ANY AUTO				OTHER THAN: AUTO ONLY: EA ACC	$
					AGG	$
	EXCESS LIABILITY	XXXXXXXXXXXXXXX	XXXXXXXXXXX	XXXXXXX	EACH OCCURRENCE	$ 5,000,000
	X OCCUR CLAIMS MADE				AGGREGATE	$ 5,000,000
						$
	DEDUCTIBLE					$
	RETENTION $					$
	WORKERS COMPENSATION AND EMPLOYERS' LIABILITY	XXXXXXXXXXXXXXX	XXXXXXXXXXX	XXXXXXXXXX	X WC STATUTORY LIMITS / OTHER	$
					E.L. EACH ACCIDENT	$ 500,000
					E.L. DISEASE - EA EMPLOYEE	$ 500,000
					E.L. DISEASE - POLICY LIMIT	$ 500,000
	OTHER					

DESCRIPTION OF OPERATIONS/LOCATIONS/VEHICLES/EXCLUSIONS ADDED BY ENDORSEMENT/SPECIAL PROVISIONS

Project: Georgetown Elementary School Classroom & Kitchen Additions - Indian River School District and EDiS Company shall be named as Additional Insureds for both ongoing and completed operations. The endorsements providing the Additional Insured status for ongoing and completed operations must be attached to the Certificate of Insurance.

CERTIFICATE HOLDER X ADDITIONAL INSURED; INSURER LETTER: ——— CANCELLATION

Indian River School District
31 Hosier Street
Selbyville, DE 19975

SHOULD ANY OF THE ABOVE DESCRIBED POLICIES BE CANCELLED BEFORE THE EXPIRATION DATE THEREOF, THE ISSUING INSURER WILL ENDEAVOR TO MAIL 30 DAYS WRITTEN NOTICE TO THE CERTIFICATE HOLDER NAMED TO THE LEFT, BUT FAILURE TO DO SO SHALL IMPOSE NO OBLIGATION OR LIABILITY OF ANY KIND UPON THE INSURER, ITS AGENTS OR REPRESENTATIVES.

AUTHORIZED REPRESENTATIVE

© ACORD CORPORATION 1988

SECTION 007200 – GENERAL CONDITIONS

1. SUMMARY

1.1. The General Conditions for this Project are the American Institute of Architects General Conditions of the Contract for Construction, Construction Manager as Advisor Edition, AIA Document A232 - 2009 Edition.

1.2 A copy of AIA Document A232 - 2009 Edition is bound into this Project Manual following this page.

END OF SECTION

AIA® Document A232™ – 2009

General Conditions of the Contract for Construction, *Construction Manager as Adviser Edition*

for the following PROJECT:
(Name, and location or address)

Indian River School District
Georgetown Elementary School Classroom & Kitchen Additions

THE CONSTRUCTION MANAGER:
(Name, legal status and address)

EDiS Company
110 South Poplar Street
Suite 400
Wilmington, DE 19801

THE OWNER:
(Name, legal status and address)

Indian River School District
31 Hosier Street
Selbyville, DE 19975

THE ARCHITECT:
(Name, legal status and address)

Becker Morgan Group
Port Exchange, Suite 300
312 W. Main Street
Salisbury, MD 21801

ADDITIONS AND DELETIONS:
The author of this document has added information needed for its completion. The author may also have revised the text of the original AIA standard form. An *Additions and Deletions Report* that notes added information as well as revisions to the standard form text is available from the author and should be reviewed. A vertical line in the left margin of this document indicates where the author has added necessary information and where the author has added to or deleted from the original AIA text.

This document has important legal consequences. Consultation with an attorney is encouraged with respect to its completion or modification.

This document is intended to be used in conjunction with AIA Documents A132™–2009, Standard Form of Agreement Between Owner and Contractor, Construction Manager as Adviser Edition; B132™–2009, Standard Form of Agreement Between Owner and Architect, Construction Manager as Adviser Edition; and C132™–2009, Standard Form of Agreement Between Owner and Construction Manager as Adviser.

Init.
/

AIA Document A232™ – 2009(rev. 12/11) (formerly A201™CMa – 1992). Copyright © 1992 and 2009 by The American Institute of Architects. All rights reserved. WARNING: This AIA® Document is protected by U.S. Copyright Law and International Treaties. Unauthorized reproduction or distribution of this AIA® Document, or any portion of it, may result in severe civil and criminal penalties, and will be prosecuted to the maximum extent possible under the law. This document was produced by AIA software at 14:33:23 on 04/16/2015 under Order No.1697299329_1 which expires on 01/26/2016, and is not for resale.
User Notes:

(1247311177)

TABLE OF ARTICLES

1 GENERAL PROVISIONS

2 OWNER

3 CONTRACTOR

4 ARCHITECT AND CONSTRUCTION MANAGER

5 SUBCONTRACTORS

6 CONSTRUCTION BY OWNER OR BY OTHER CONTRACTORS

7 CHANGES IN THE WORK

8 TIME

9 PAYMENTS AND COMPLETION

10 PROTECTION OF PERSONS AND PROPERTY

11 INSURANCE AND BONDS

12 UNCOVERING AND CORRECTION OF WORK

13 MISCELLANEOUS PROVISIONS

14 TERMINATION OR SUSPENSION OF THE CONTRACT

15 CLAIMS AND DISPUTES

AIA Document A232™ – 2009(rev. 12/11) (formerly A201™CMa – 1992). Copyright © 1992 and 2009 by The American Institute of Architects. All rights reserved. WARNING: This AIA® Document is protected by U.S. Copyright Law and International Treaties. Unauthorized reproduction or distribution of this AIA® Document, or any portion of it, may result in severe civil and criminal penalties, and will be prosecuted to the maximum extent possible under the law. This document was produced by AIA software at 14:33:23 on 04/16/2015 under Order No.1697299329_1 which expires on 01/26/2016, and is not for resale.
User Notes:

INDEX
(Topics and numbers in bold are section headings.)

Acceptance of Nonconforming Work
9.6.6, 9.9.3, **12.3**
Acceptance of Work
9.6.6, 9.8.2, 9.9.3, 9.10.1, 9.10.3, 12.3
Access to Work
3.16, 6.2.1, 12.1
Accident Prevention
10
Acts and Omissions
3.2.1, 3.2.2, 3.3.2, 3.12.8, 3.18, 8.3.1, 9.5.1, 10.1, 10.2.5, 13.4.2, 13.7
Addenda
1.1.1, 3.11, 4.2.14
Additional Costs, Claims for
3.2.4, 3.7.4, 3.7.5, 6.1.1, 7.3, 9.10.3, 9.10.4, 10.3, 10.4, 15.1.4
Additional Inspections and Testing
4.2.8, 12.2.1, 13.5
Additional Insured
11.1.4
Additional Time, Claims for
3.7.4, 3.7.5, 6.1.1, 7.3, 8.3, 10.3
Administration of the Contract
3.10, **4.2**
Advertisement or Invitation to Bid
1.1.1
Aesthetic Effect
4.2.19
Allowances
3.8, 7.3.8
All-risk Insurance
11.3.1, 11.3.1.1
Applications for Payment
4.2.7, 4.2.15, 7.3.9, 9.2, **9.3**, 9.4, 9.5.1, 9.7, 9.8.3, 9.10.1, 9.10.3, 9.10.5, 11.1.3, 14.2.4
Approvals
2.1.1, 2.2.2, 2.4, 3.1.4, 3.10.1, 3.10.2, 3.12.4 through 3.12.10, 3.13.2, 3.15.2, 4.2.9, 9.3.2, 13.4.2, 13.5
Arbitration
8.3.1, 11.3.10, 13.1, 15.3.2, **15.4**
ARCHITECT
4
Architect, Certificates for Payment
9.4
Architect, Definition of
4.1.1
Architect, Extent of Authority
5.2, 7.1.2, 7.3.7, 7.4, 9.3.1, 9.4, 9.5, 9.8.3, 9.8.4, 9.10.1, 9.10.3, 12.1, 12.2.1, 13.5.1, 13.5.2, 15.1.3, 15.2.1
Architect, Limitations of Authority and Responsibility
2.1.1, 3.12.8, 4.2.1, 4.2.2, 4.2.8, 4.2.13, 5.2.1, 9.6.4, 15.2
Architect's Additional Services and Expenses
2.4, 11.3.1.1, 12.2.1, 12.2.4, 13.5.2
Architect's Administration of the Contract
4.2, 9.4, 9.5, 15.2
Architect's Approvals
3.12.8
Architect's Authority to Reject Work
4.2.8, 12.1.2, 12.2.1
Architect's Copyright
1.5
Architect's Decisions
4.2.8, 7.3.9, 7.4, 8.1.3, 8.3.1, 9.2, 9.4, 9.5, 9.8.3, 9.9.2, 13.5.2, 14.2.2, 14.2.4, 15.2
Architect's Inspections
3.7.4, 4.2, 9.8.3, 9.9.2, 9.10.1, 13.5
Architect's Instructions
3.2.4, 7.4, 9.4
Architect's Interpretations
4.2.8, 4.2.17, 4.2.18
Architect's On-Site Observations
4.2.2, 9.4, 9.5.1, 9.10.1, 12.1.1, 12.1.2, 13.5
Architect's Project Representative
4.2.16
Architect's Relationship with Contractor
1.1.2, 1.5, 3.2.2, 3.2.3, 3.2.4, 3.3.1, 3.4.2, 3.5, 3.7.4, 3.9.2, 3.9.3, 3.10, 3.11, 3.12.8, 3.16, 3.18, 4.2, 5.2, 6.2.2, 8.2, 11.3.7, 12.1, 13.5
Architect's Relationship with Construction Manager
1.1.2, 9.3 through 9.10, 10.3, 13.5.1, 10.3, 11.3.7, 13.4.2, 13.5.4
Architect's Relationship with Subcontractors
1.1.2, 4.2.8, 5.3, 9.6.3, 9.6.4
Architect's Representations
9.4, 9.5, 9.10.1
Architect's Site Visits
4.2.2, 9.4, 9.5.1, 9.8.3, 9.9.2, 9.10.1, 13.5
Asbestos
10.3.1
Attorneys' Fees
3.18.1, 9.10.2, 10.3.3
Award of Other Contracts
6.1.1, 6.1.2
Award of Subcontracts and Other Contracts for Portions of the Work
5.2
Basic Definitions
1.1
Bidding Requirements
1.1.1, 5.2.1, 11.4.1

Init.
/
AIA Document A232™ – 2009(rev. 12/11) (formerly A201™CMa – 1992). Copyright © 1992 and 2009 by The American Institute of Architects. All rights reserved. WARNING: This AIA® Document is protected by U.S. Copyright Law and International Treaties. Unauthorized reproduction or distribution of this AIA® Document, or any portion of it, may result in severe civil and criminal penalties, and will be prosecuted to the maximum extent possible under the law. This document was produced by AIA software at 14:33:23 on 04/16/2015 under Order No.1697299329_1 which expires on 01/26/2016, and is not for resale.
User Notes:

Binding Dispute Resolution
9.7, 11.3.9, 11.3.10, 13.1, 15.2.5, 15.2.6.1, 15.3.1, 15.3.2, 15.4.1
Boiler and Machinery Insurance
11.3.2
BONDS, INSURANCE AND
11
Bonds, Lien
7.3.7.4, 9.10.3
Bonds, Performance and Payment
7.3.7.4, 9.6.7, 9.10.3, 11.3.9, 11.4
Building Permit
2.2.2, 3.7.1
Capitalization
1.3
Certificate of Substantial Completion
9.8.3, 9.8.4, 9.8.5
Certificates for Payment
4.2.2, 9.3.3, **9.4**, 9.5, 9.6.1, 9.6.6, 9.7, 9.10.1, 9.10.3, 15.1.3
Certificates of Inspection, Testing or Approval
13.5.4
Certificates of Insurance
9.3.2, 9.10.2, 11.1.3
Change Orders
1.1.1, 2.4, 3.4.2, 3.7.4, 3.8.2, 3.11, 3.12.8, 4.2.12, 4.2.13, 4.2.14, 5.2.3, 7.1.1, 7.1.2, **7.2**, 7.3.2, 7.3.4, 7.3.6, 7.3.9, 7.3.10, 8.3.1, 9.3.1.1, 9.10.3, 10.3.2, 11.3.1.2, 11.3.4, 11.3.9, 12.1.2, 15.1.3
Change Orders, Definition of
7.2
Changes
7.1
CHANGES IN THE WORK
2.2.1, 3.4.2, 3.11, 3.12.8, 4.2.13, 4.2.14, **7**, 8.3.1, 9.3.1.1
Claims, Definition of
15.1.1
CLAIMS AND DISPUTES
1.1.8, 3.2.4, 3.7.5, 6.1.1, 7.3.9, 8.3.2, 9.3.3, 9.10.3, 9.10.4, 10.3.3, **15**, 15.4
Claims for Additional Cost
3.2.4, 3.7.5, 6.1.1, 7.3.9, 9.10.3, 9.10.4, 10.3.2, 10.4, **15.1.4**
Claims for Additional Time
3.2.4, 3.7.5, 7, 8.3.2, 10.4, **15.1.5**
Concealed or Unknown Conditions, Claims for
3.7
Claims for Damages
3.2.4, 3.18, 6.1.1, 6.2.5, 8.3.2, 9.3.3, 9.5.1.2, 9.10.2, 9.10.5, 10.3.3, 11.1.1, 11.3.5, 11.3.7, 15.1.6
Cleaning Up
3.15, 6.3
Commencement of Statutory Limitation Period
13.7
Commencement of the Work, Definition of
8.1.2
Communications, Owner to Architect
2.2.6
Communications, Owner to Construction Manager
2.2.6
Communications, Owner to Contractor
2.2.6
Communications Facilitating Contract Administration
3.9.1, **4.2.6**
COMPLETION, PAYMENTS AND
9
Completion, Substantial
4.2.15, 8.1.1, 8.1.3, 8.2.3, 9.4.3.3, **9.8**, 9.9.1, 9.10.3, 12.2.1, 12.2.2, 13.7
Concealed or Unknown Conditions
3.7.4, 4.2.8, 8.3.1, 10.3
Conditions of the Contract
1.1.1
Consolidation or Joinder
15.4.4
CONSTRUCTION BY OWNER OR BY OTHER CONTRACTORS
1.1.4, **6**
Construction Change Directive, Definition of
7.3.1
Construction Change Directives
1.1.1, 3.4.2, 3.12.8, 4.2.12, 4.2.13, 7.1.1, 7.1.2, 7.1.3, **7.3**, 9.3.1.1
Construction Manager, Building Permits
2.2.2
Construction Manager, Communications through
4.2.6
Construction Manager, Construction Schedule
3.10.1, 3.10.3
CONSTRUCTION MANAGER
4
Construction Manager, Definition of
4.1.2
Construction Manager, Documents and Samples at the Site
3.11
Construction Manager, Extent of Authority
3.12.7, 3.12.8, 4.1.3, 4.2.1, 4.2.4, 4.2.5, 4.2.9, 7.1.2, 7.2, 7.3.1, 8.3, 9.3.1, 9.4.1, 9.4.2, 9.4.3, 9.8.2, 9.8.3, 9.8.4, 9.9.1, 12.1, 12.2.1, 14.2.2, 14.2.4
Construction Manager, Limitations of Authority and Responsibility
4.2.5, 4.2.8, 13.4.2
Construction Manager, Submittals
4.2.9
Construction Manager's Additional Services and Expenses
12.2.1
Construction Manager's Administration of the Contract
4.2, 9.4, 9.5

Init.
/
AIA Document A232™ – 2009(rev. 12/11) (formerly A201™CMa – 1992). Copyright © 1992 and 2009 by The American Institute of Architects. All rights reserved. WARNING: This AIA® Document is protected by U.S. Copyright Law and International Treaties. Unauthorized reproduction or distribution of this AIA® Document, or any portion of it, may result in severe civil and criminal penalties, and will be prosecuted to the maximum extent possible under the law. This document was produced by AIA software at 14:33:23 on 04/16/2015 under Order No.1697299329_1 which expires on 01/26/2016, and is not for resale.
User Notes:

(1247311177)

Construction Manager's Approval
2.4, 3.10.1, 3.10.2
Construction Manager's Authority to Reject Work
4.2.8, 12.2.1
Construction Manager's Decisions
7.3.7, 7.3.9, 9.4.1, 9.5.1
Construction Manager's Inspections
4.2.8, 9.8.3, 9.9.2
Construction Manager's On-Site Observations
9.5.1
Construction Manager's Relationship with Architect
1.1.2, 4.2.1, 4.2.7, 4.2.8, 4.2.9, 4.2.13, 4.2.15, 4.2.16, 4.2.20, 9.2.1, 9.4.2, 9.5, 9.6.1, 9.6.3, 9.8.2, 9.8.3, 9.8.4, 9.9.1, 9.10.1, 9.10.2, 9.10.3, 11.1.3, 12.2.4, 13.5.1, 13.5.2, 13.5.4, 14.2.2, 14.2.4
Construction Manager's Relationship with Contractor
3.2.2, 3.2.3, 3.3.1, 3.5, 3.10.1, 3.10.2, 3.10.3, 3.11, 3.12.5, 3.12.6, 3.12.7, 3.12.8, 3.12.9, 3.12.10, 3.13.2, 3.14.2, 3.15.2, 3.16, 3.17, 3.18.1, 4.2.4, 4.2.5, 4.2.6, 4.2.9, 4.2.14, 4.2.17, 4.2.20, 5.2, 6.2.1, 6.2.2, 7.1.2, 7.2, 7.3.5, 7.3.7, 7.3.10, 8.3.1, 9.2, 9.3.1, 9.4.1, 9.4.2, 9.7, 9.8.2, 9.8.3, 9.8.4, 9.9.1, 9.10.1, 9.10.2, 9.10.3, 10.1, 10.3, 11.3.7, 12.1, 13.5.1, 13.5.2, 13.5.3, 13.5.4
Construction Manager's Relationship with Owner
2.2.2, 4.2.1, 10.3.2
Construction Manager's Relationship with Other Contractors and Owner's Own Forces
4.2.4
Construction Manager's Relationship with Subcontractors
4.2.8, 5.3, 9.6.3, 9.6.4
Construction Manager's Site Visits
9.5.1
Construction Schedules, Contractor's
3.10, 3.12.1, 3.12.2, 6.1.2, 15.1.5.2
Contingent Assignment of Subcontracts
5.4, 14.2.2.2
Continuing Contract Performance
15.1.3
Contract, Definition of
1.1.2
CONTRACT, TERMINATION OR SUSPENSION OF THE
5.4.1.1, 11.3.9, **14**
Contract Administration
3.1.3, 4.2, 9.4, 9.5
Contract Award and Execution, Conditions Relating to
3.7.1, 3.10, 5.2, 6.1, 11.1.3, 11.3.6, 11.4.1
Contract Documents, Copies Furnished and Use of
1.5.2, 2.2.5, 5.3
Contract Documents, Definition of
1.1.1
Contract Performance During Arbitration
15.1.3
Contract Sum
3.7.4, 3.7.5, 3.8, 3.10.2, 5.2.3, 7.2, 7.3, 7.4, **9.1,** 9.2, 9.5.1.4, 9.6.7, 9.7, 10.3.2, 11.3.1.1, 12.3, 14.2.4, 14.3.2, 15.1.4, 15.2.5
Contract Time
3.7.4, 3.7.5, 4, 3.10.2, 5.2.3, 7.2.3, 7.3.1, 7.3.5, 7.3.10, 7.4, 8.1.1, 8.2.1, 8.2.3, 8.3.1, 9.5.1, 9.7, 10.3.2, 12.1.1, 14.3.2, 15.1.5.1, 15.2.5
Contract Time, Definition of
8.1.1
CONTRACTOR
3
Contractor, Definition of
3.1.1
Contractor's Construction Schedules
3.10, 3.12.1, 3.12.2, 6.1.3, 15.1.5.2
Contractor's Employees
3.3.2, 3.4.3, 3.8.1, 3.9, 3.18.2, 4.2.3, 4.2.6, 10.2, 10.3, 11.1.1, 11.3.7, 14.1, 14.2.1.1
Contractor's Liability Insurance
11.1
Contractor's Relationship with Other Contractors and Owner's Own Forces
3.12.5, 3.14.2, 4.2.6, 6, 11.3, 12.1.2, 12.2.4
Contractor's Relationship with Subcontractors
1.2.2, 3.3.2, 3.18, 5, 9.6.2, 9.6.7, 9.10.2, 11.3.1.2, 11.3.7, 11.3.8, 14.2.1.2
Contractor's Relationship with the Architect
1.1.2, 1.5, 3.2.2, 3.2.3, 3.2.4, 3.4.2, 3.5, 3.7.4, 3.10.1, 3.11, 3.12, 3.16, 3.18, 5.2, 6.2.2, 7, 8.3.1, 9.2, 9.3, 9.4, 9.5, 9.7, 9.8, 9.9, 10.2.6, 10.3, 11.3.7, 12, 13.5, 15.1.2, 15.2.1
Contractor's Relationship with the Construction Manager
1.1.2, 3.2.2, 3.2.3, 3.3.1, 3.5, 3.10.1, 3.10.2, 3.10.3, 3.11, 3.12.5, 3.12.7, 3.12.9, 3.12.10, 3.13.2, 3.14.2, 3.15.1, 3.16, 3.17, 3.18.1, 4.2.4, 4.2.5, 5.2, 6.2.1, 6.2.2, 7.1.2, 7.3.5, 7.3.7, 7.3.10, 8.3.1, 9.2, 9.3.1, 9.4.1, 9.4.2, 9.8.2, 9.9.1, 9.10.1, 9.10.2, 9.10.3, 10.1, 10.2.6, 10.3, 11.3.7, 12.1, 13.5.1, 13.5.2, 13.5.3, 13.5.4
Contractor's Representations
3.2.1, 3.2.2, 3.5, 3.12.6, 6.2.2, 8.2.1, 9.3.3, 9.8.2
Contractor's Responsibility for Those Performing the Work
3.3.2, 3.18, 5.3, 6.1.3, 6.2, 9.5.1, 10.2.8
Contractor's Review of Contract Documents
3.2
Contractor's Right to Stop the Work
9.7
Contractor's Right to Terminate the Contract
14.1
Contractor's Submittals
3.10.2, 3.11, 3.12, 4.2.9, 9.2, 9.3, 9.8.2, 9.9.1, 9.10.2, 9.10.3, 11.1.3, 11.4.2
Contractor's Superintendent
3.9, 10.2.6

Init.
/
AIA Document A232™ – 2009(rev. 12/11) (formerly A201™CMa – 1992). Copyright © 1992 and 2009 by The American Institute of Architects. All rights reserved. WARNING: This AIA® Document is protected by U.S. Copyright Law and International Treaties. Unauthorized reproduction or distribution of this AIA® Document, or any portion of it, may result in severe civil and criminal penalties, and will be prosecuted to the maximum extent possible under the law. This document was produced by AIA software at 14:33:23 on 04/16/2015 under Order No.1697299329_1 which expires on 01/26/2016, and is not for resale.
User Notes:

(1247311177)

Contractor's Supervision and Construction Procedures
1.2.2, 3.3, 3.4, 4.2.5, 4.2.7, 6.1, 6.2.4, 7.1.3, 7.3.5, 7.3.7, 8.2, 10, 12, 14, 15.1.3
Contractual Liability Insurance
11.1.1.8, 11.2, 11.3.1.5
Coordination and Correlation
1.2, 3.2, 3.3.1, 3.10, 3.12.6, 6.1.2, 6.2.1
Copies Furnished of Drawings and Specifications
1.5, 2.2.5, 3.11
Copyrights
1.5, 3.17
Correction of Work
2.3, 2.4, 9.4.1, 9.4.2, 9.8.2, 9.8.3, 9.9.1, 12.1.2, **12.2**
Correlation and Intent of the Contract Documents
1.2
Costs
2.4, 3.2.4, 3.7.3, 3.8.2, 3.15.2, 5.4.2, 6.1.1, 6.2.3, 7.3.3.3, 7.3.6, 7.3.7, 7.3.8, 7.3.9, 11.3.1.2, 11.3.1.3, 11.3.4, 11.3.9, 12.1, 12.2.1, 13.5, 14
Cutting and Patching
3.14, 6.2.5
Damage to Construction of Owner or Other Contractors
3.14.2, 6.2.4, 9.5.1.5, 10.2.1.2, 10.2.5, 10.4, 11.1.1, 11.3, 12.2.4
Damage to the Work
3.14.2, 9.9.1, 10.2.1.2, 10.2.5, 10.4, 11.3.1, 12.2.4
Damages, Claims for
3.2.4, 3.18, 6.1.1, 8.3.2, 10.3.3, 11.1.1, 11.3.5, 11.3.7, 14.2.4, 15.1.6
Damages for Delay
6.1.1, 8.3.3, 9.5.1.6, 9.7, 10.3.2, 15.1.5
Date of Commencement of the Work, Definition of
8.1.2
Date of Substantial Completion, Definition of
8.1.3
Day, Definition of
8.1.4
Decisions of the Architect
3.7.4, 4.2.7, 4.2.8, 4.2.10, 4.2.11, 4.2.13, 4.2.15, 4.2.16, 4.2.17, 4.2.18, 4.2.19, 4.2.20, 7.3.9, 8.1.3, 8.3.1, 9.2, 9.4, 9.5, 9.8.3, 9.8.4, 9.9.1, 10.1.2, 13.5.2, 14.2.2, 14.2.4, 15.1, 15.2
Decisions of the Construction Manager
7.3.7, 7.3.8, 7.3.9, 15.1, 15.2
Decisions to Withhold Certification
9.4.1, **9.5**, 9.7, 14.1.1.3
Defective or Nonconforming Work, Acceptance, Rejection and Correction of
2.3, 2.4, 3.5, 4.2.8, 6.2.5, 9.5.1, 9.6.6, 9.8.2, 9.9.3, 9.10.4, 12.2.1, 12.2.2
Definitions
1.1, 2.1.1, 3.1.1, 3.12.1, 3.12.2, 3.12.3, 4.1.1, 4.1.2, 7.2, 7.3.1, 8.1, 9.1, 9.8.1, 15.1.1
Delays and Extensions of Time
3.2, 3.7.4, 5.2.3, 7.2, 7.3.1, 7.4, **8.3**, 9.5.1, 9.7, 10.3.2, 10.4, 14.3.2, 15.1.5, 15.2.5
Disputes
7.3.8, 7.3.9, 9.3, 15.1, 15.2
DISPUTES, CLAIMS AND
3.2.4, 6.1.1, 6.3, 7.3.9, 9.3.3, **15**, 15.4
Documents and Samples at the Site
3.11
Drawings, Definition of
1.1.5
Drawings and Specifications, Ownership and Use
1.1.1, **1.5,** 2.2.5, 3.11, 5.3
Duty to Review Contract Documents and Field Conditions
3.2
Effective Date of Insurance
8.2.2, 11.1.2
Emergencies
10.4, 14.1.1.2, 15.1.4
Employees, Contractor's
3.3.2, 3.4.3, 3.8.1, 3.9, 3.18.1, 3.18.2, 4.2.3, 4.2.6, 10.2, 10.3.3, 11.1.1, 11.3.7, 14.1, 14.2.1.1
Equipment, Labor, Materials and or
1.1.3, 1.1.6, 3.4, 3.5, 3.8.2, 3.8.3, 3.12.2, 3.12.3, 3.13.1, 3.15.1, 4.2.8, 4.2.7, 5.2.1, 6.2.1, 7.3.7, 9.3.2, 9.3.3, 9.5.1.3, 9.10.2, 10.2.1, 10.2.4, 14.2.2
Execution and Progress of the Work
1.1.3, 1.2.1, 1.2.2, 2.2.3, 2.2.5, 3.1, 3.3.1, 3.4.1, 3.5, 3.7.1, 3.10.1, 3.12, 3.14, 4.2, 6.2.2, 7.1.3, 7.3.5, 8.2, 9.5.1, 9.9.1, 10.2, 10.3, 12.2, 14.2, 14.3.1, 15.1.3
Extensions of Time
3.2.4, 3.7.4, 5.2.3, 7.2.3, 7.4, 8.3, 9.5.1, 9.7, 10.3.2, 10.4, 14.3, 15.1.5, 15.2.5
Failure of Payment
9.5.1.3, **9.7**, 13.6, 14.1.1.3, 14.1.3, 14.2.1.2, 15.1.4
Faulty Work (See Defective or Nonconforming Work)
Final Completion and Final Payment
4.2.1, 4.2.15, 9.8.2, **9.10**, 11.1.2, 11.1.3, 11.3.1, 11.3.5, 12.3, 15.2.1
Financial Arrangements, Owner's
2.2.1
GENERAL PROVISIONS
1
Governing Law
13.1
Guarantees (See Warranty and Warranties)
Hazardous Materials
10.2.4, **10.3**
Identification of Contract Documents
1.2.1
Identification of Subcontractors and Suppliers
5.2.1
Indemnification
3.18, 9.10.2, 10.3.3, 10.3.5, 10.3.6, 11.3.1.2, 11.3.7

Init.
/
AIA Document A232™ – 2009(rev. 12/11) (formerly A201™CMa – 1992). Copyright © 1992 and 2009 by The American Institute of Architects. All rights reserved. WARNING: This AIA® Document is protected by U.S. Copyright Law and International Treaties. Unauthorized reproduction or distribution of this AIA® Document, or any portion of it, may result in severe civil and criminal penalties, and will be prosecuted to the maximum extent possible under the law. This document was produced by AIA software at 14:33:23 on 04/16/2015 under Order No.1697299329_1 which expires on 01/26/2016, and is not for resale.
User Notes:

(1247311177)

Information and Services Required of the Owner
2.1.2, **2.2**, 4.2.6, 6.1.2, 6.2.5, 9.6.1, 9.6.4, 9.8, 9.9.1, 9.10.3, 10.3.2, 10.3.3, 11.2, 11.3.4, 13.5.1, 13.5.2, 14.1.1.4, 14.1.3, 15.1.2
Initial Decision
15.2
Initial Decision Maker, Definition of
1.1.8
Initial Decision Maker, Extent of Authority
14.2.2, 14.2.4, 15.1.3, 15.2.2, 15.2.3, 15.2.4, 15.2.5
Injury or Damage to Person or Property
3.18.1, 10.2.1, 10.2.2, **10.2.8**, 10.3, 10.3.3, 10.4, 11.1.1
Inspections
3.1.3, 3.7.1, 4.2.2, 9.8.2, 9.9.2, 9.10.1, 13.5
Instructions to Bidders
1.1.1
Instructions to the Contractor
3.1.4, 3.3.3, 3.7.1, 4.2.4, 5.2.1, 7, 8.2.2, 12.1, 13.5.2
Instruments of Service, Definition of
1.1.7, 1.5, 1.6
Insurance
6.1.1, 7.3.7, 8.2.2, 9.3.2, 9.8.4, 9.9.1, 9.10.2, 10.2.5, 11
Insurance, Boiler and Machinery
11.3.2
Insurance, Contractor's Liability
11.1
Insurance, Effective Date of
8.2.2, 11.1.2
Insurance, Loss of Use
11.3.3
Insurance, Owner's Liability
11.2
Insurance, Property
10.2.5, **11.3**
Insurance, Stored Materials
9.3.2, 11.3.1
INSURANCE AND BONDS
11
Insurance Companies, Consent to Partial Occupancy
9.9.1, 11.3.1.5
Insurance Companies, Settlement with
11.3.10
Intent of the Contract Documents
1.2, 4.2.18, 4.2.19, 7.4
Interest
9.7, **13.6**
Interpretation
1.4, 4.2.8, 4.2.17, 4.2.18
Interpretations, Written
4.2.17, 4.2.18, 4.2.20
Joinder and Consolidation of Claims Required
15.4.4
Judgment on Final Award
15.4.2
Labor and Materials, Equipment
1.1.3, 1.1.6, 3.4, 3.8.2, 3.8.3, 3.12.2, 3.12.3, 3.12.6, 3.12.10, 3.13.1, 3.15.1, 5.2.1, 6.2.1, 7.3.7, 9.3.2, 9.3.3, 9.5.1.3, 9.6, 9.10.2, 10.2.1.2, 11.3.1, 14.2.1, 14.2.2
Labor Disputes
8.3.1
Laws and Regulations
3.2.3, 3.2.4, 3.7, 3.13.1, 10.2.2, 10.2.3, 13.5.1, 14.2.1
Liens
2.1.2, 9.3.3, 9.10.2, 9.10.4, 15.2.8
Limitation on Consolidation or Joinder
15.4.4
Limitations, Statutes of
15.4.1
Limitations of Authority
3.12.4, 4.1.3, 4.2.16
Limitations of Liability
9.6.7, 11.1.1, 12.2
Limitations of Time
3.10.1, 4.2.17, 4.2.20, 8.2.1, 9.3.3, 9.6.1, 9.8.4, 9.10.2, 10.2, 11.1.3, 12.1.1, 12.2.2.2, 12.2.5, 13.7, 14.1.1, 15.2.6.1
Loss of Use Insurance
11.3.3
Material Suppliers
1.5.1, 1.5.2, 3.12, 4.2.6, 4.2.8, 9.3.1, 9.3.1.2, 9.3.3, 9.5.3, 9.6.4, 9.6.5, 9.6.7, 9.10.5, 11.3.1
Materials, Hazardous
10.2.4, **10.3**
Materials, Labor, Equipment and
1.1.3, 1.1.6, 1.5.1, 1.5.2, 3.4, 3.5, 3.8.2, 3.8.3, 3.12.2, 3.12.3, 3.12.6, 3.12.10, 3.13.1, 5.2.1, 6.2.1, 9.3.1, 9.3.2, 9.3.3, 9.5.1, 9.5.3, 9.6.4, 9.6.5, 9.6.7, 9.10.2, 9.10.5, 10.2.1, 10.2.4, 10.3
Means, Methods, Techniques, Sequences and Procedures of Construction
3.3.1, 3.12.10, 4.2.5, 4.2.11
Mechanic's Lien
2.1.2, 15.2.8
Mediation
8.3.1, 10.3.5, 15.2.1, 15.2.5, 15.2.6, **15.3**, 15.4.1
Minor Changes in the Work
1.1.1, 3.12.8, 4.2.13, 7.1, **7.4**
MISCELLANEOUS PROVISIONS
13
Modifications, Definition of
1.1.1
Modifications to the Contract
1.1.1, 1.1.2, 3.11, 4.1.3, 4.2.14, 5.2.3, 7, 11.3.1
Mutual Responsibility
6.2
Nonconforming Work, Acceptance of
9.4.3, 9.8.3, **12.3**
Nonconforming Work, Rejection and Correction of
2.3, 2.4, 3.2.3, 3.7.3, 9.4.3.3, 9.8.2, 9.8.3, 9.9.1, 11.1.1, 12.2.2.1, 12.2.3, 12.2.4, 12.2.5

Init.
/
AIA Document A232™ – 2009(rev. 12/11) (formerly A201™CMa – 1992). Copyright © 1992 and 2009 by The American Institute of Architects. All rights reserved. WARNING: This AIA® Document is protected by U.S. Copyright Law and International Treaties. Unauthorized reproduction or distribution of this AIA® Document, or any portion of it, may result in severe civil and criminal penalties, and will be prosecuted to the maximum extent possible under the law. This document was produced by AIA software at 14:33:23 on 04/16/2015 under Order No.1697299329_1 which expires on 01/26/2016, and is not for resale.
User Notes:

(1247311177)

Notice
1.5, 2.1.2, 2.2.1, 2.4, 3.2.4, 3.3.1, 3.7.1, 3.7.2, 3.7.5, 3.9.2, 3.12.9, 5.2.1, 6.3, 9.4.1, 9.7, 9.10.1, 9.10.2, 10.2.2, 10.2.6, 10.2.8, 10.3.2, 11.3.6, 12.2.2.1, 13.3, 13.5.1, 13.5.2, 14.1.2, 14.2.2, 14.4.2, 15.1.2, 15.1.4, 15.1.5.1, 15.2, 15.4.1
Notice of Claims
3.7.2, 10.2.8, **15.1.2**, 15.4.1
Notice of Testing and Inspections
13.5.1, 13.5.2
Notices, Permits, Fees and
3.7, 7.3.7, 10.2.2
Observations, On-Site
3.2.1, 9.5.1, 12.1.1
Occupancy
2.2.2, 9.6.6, 9.9, 11.3.1.5
On-Site Inspections
4.2.2, 9.10.1, 9.4.4, 9.5.1
Orders, Written
4.2.7, 4.2.18, 4.2.20
Other Contracts and Contractors
1.1.4, 3.14.2, 4.2.9, 6, 11.3.7, 12.1.2
OWNER
2
Owner, Definition of
2.1.1
Owner, Information and Services Required of the
2.1.2, **2.2**, 4.2, 6.1.2, 6.1.3, 6.2.5, 9.3.2, 9.6.1, 9.6.4, 9.9.2, 9.10.2, 10.3.3, 11.2, 11.3, 13.5.1, 13.5.2, 14.1.1, 14.1.3, 15.1.3
Owner's Authority
1.5, 2.1.1, 2.3, 2.4, 3.4.2, 3.12.10, 3.14.2, 4.1.2, 4.1.3, 4.2.8, 4.2.9, 5.2.1, 5.2.4, 5.4.1, 6.1, 6.3, 7.2, 7.3.1, 8.2.2, 9.3.1, 9.3.2, 9.5.1, 9.6.4, 9.9.1, 9.10.2, 10.3.2, 11.3.3, 11.3.10, 12.2.2.1, 12.3, 13.5.2, 14.2, 14.3.1, 14.4, 15.2.7
Owner's Financial Capability
2.2.1, 13.2.2, 14.1.1
Owner's Liability Insurance
11.2
Owner's Relationship with Subcontractors
1.1.2, 5.2.1, 5.3, 5.4.1, 9.6.4, 9.10.2, 14.2.2
Owner's Right to Carry Out the Work
2.4, 12.2.4, 14.2.2
Owner's Right to Clean Up
6.3
Owner's Right to Perform Construction with Own Forces and to Award Other Contracts
6.1
Owner's Right to Stop the Work
2.3
Owner's Right to Suspend the Work
14.3
Owner's Right to Terminate the Contract
14.2
Ownership and Use of Drawings, Specifications and Other Instruments of Service
1.1.1, 1.1.5, **1.5**, 1.6, 3.11, 3.12.10, 3.17, 4.2.14, 4.2.18, 4.2.20
Partial Occupancy or Use
9.9, 11.3.1.5
Patching, Cutting and
3.14, 6.2.5
Patents and Copyrights, Royalties
3.17
Payment, Applications for
4.2.1, 4.2.7, 4.2.15, 7.3.9, 9.2, **9.3**, 9.4, 9.5, 9.7, 9.10.1, 9.10.3, 9.10.5, 11.1.3
Payment, Certificates for
4.2.15, 7.3.9, 9.3, **9.4**, 9.5, 9.6.1, 9.6.6, 9.7, 9.10.1, 9.10.3, 14.1.1.3, 15.1.3
Payment, Failure of
9.4.1, 9.5, **9.7**, 14.1.1.3
Payment, Final
4.2.1, 9.8.2, **9.10**, 11.1.2, 11.3.1, 11.3.5, 12.3, 15.2.1
Payment Bond, Performance Bond and
5.4.1, 7.3.7, 9.6.7, 9.10.2, 9.10.3, **11**, **11.4**
Payments, Progress
9.3.1, 9.4.2, **9.6**
PAYMENTS AND COMPLETION
9, 14
Payments to Subcontractors
5.4.2, 9.3, 9.5.1.3, 9.5.3, 9.6.2, 9.6.3, 9.6.4, 9.6.7, 9.10.5, 14.2.1.2
PCB
10.3.1
Performance Bond and Payment Bond
5.4.1, 7.3.7, 9.6.7, 9.10.2, 9.10.3, 11, **11.4**
Permits, Fees, Notices and Compliance with Laws
2.2.2, **3.7**, 7.3.7.4, 10.2.2
PERSONS AND PROPERTY, PROTECTION OF
10
Polychlorinated Biphenyl
10.3.1
Product Data, Definition of
3.12.2
Product Data and Samples, Shop Drawings
3.11, **3.12**, 4.2.9, 4.2.10, 4.2.14
Progress and Completion
8.2, 9.3.1, 9.4.2, 9.6, 9.8, 9.10, 14.2.4, 15.1.6
Progress Payments
9.3.1, 9.4.2, **9.6**
Project, Definition of
1.1.4
Project Representatives
4.2.16
Property Insurance
10.2.5, **11.3**
Project Schedule
3.10.1, 3.10.3, 3.10.4, 4.2.2, 4.2.3, 4.2.4

Init.
/
AIA Document A232™ – 2009(rev. 12/11) (formerly A201™CMa – 1992). Copyright © 1992 and 2009 by The American Institute of Architects. All rights reserved. WARNING: This AIA® Document is protected by U.S. Copyright Law and International Treaties. Unauthorized reproduction or distribution of this AIA® Document, or any portion of it, may result in severe civil and criminal penalties, and will be prosecuted to the maximum extent possible under the law. This document was produced by AIA software at 14:33:23 on 04/16/2015 under Order No.1697299329_1 which expires on 01/26/2016, and is not for resale.
User Notes:
(1247311177)

PROTECTION OF PERSONS AND PROPERTY
10
Regulations and Laws
1.5, 3.2.3, 3.6, 3.7, 3.12.10, 3.13, 4.1.1, 9.6.4, 9.9.1, 10.2.2, 11.1, 11.4, 13.1, 13.4, 13.5.1, 13.5.2, 13.6, 14.1.1, 14.2.1, 15.2.8, 15.4
Rejection of Work
3.5, 4.2.8, 12.2.1
Releases of and Waivers and of Liens
9.10.2
Representations
1.3, 2.2.1, 3.5, 3.12, 6.2.2, 8.2.1, 9.3.3, 9.4.3, 9.5.1, 9.8.2, 9.10.1
Representatives
2.1.1, 3.1.1, 3.9, 4.1.1, 4.2.1, 4.2.2, 4.2.10, 5.1.1, 5.1.2, 13.2.1
Requests for Information
4.2.20
Resolution of Claims and Disputes
15
Responsibility for Those Performing the Work
3.3.2, 3.7.3, 3.12.8, 3.18, 4.2.2, 4.2.5, 4.2.8, 5.3, 6.1.2, 6.2, 6.3, 9.5.1, 9.8.2, 10
Retainage
9.3.1, 9.6.2, 9.8.5, 9.9.1, 9.10.2, 9.10.3
Review of Contract Documents and Field Conditions by Contractor
1.2.2, **3.2**, 3.7.3, 3.12.7
Review of Contractor's Submittals by Owner, Construction Manager and Architect
3.10.1, 3.10.2, 3.11, 3.12, 4.2, 5.2, 5.2, 9.2, 9.8.2
Review of Shop Drawings, Product Data and Samples by Contractor
3.12.5
Rights and Remedies
1.1.2, 2.3, 2.4, 3.7.4, 3.15.2, 4.2.8, 5.3, 5.4, 6.1, 6.3, 7.3.1, 8.3, 9.5.1, 9.7, 10.2.5, 10.3, 12.2.2, 12.2.4, **13.4**, 14, 15.4
Royalties, Patents and Copyrights
3.17
Rules and Notices for Arbitration
15.4
Safety of Persons and Property
10.2, 10.3, 10.4
Safety Precautions and Programs
3.3.1, 3.12, 4.2.5, 5.3, **10.1**, 10.2, 10.3, 10.4
Samples, Definition of
3.12.3
Samples, Shop Drawings, Product Data and
3.11, **3.12**, 4.2.9, 4.2.10
Samples at the Site, Documents and
3.11
Schedule of Values
9.2, 9.3.1
Schedules, Construction
3.10, 3.12.1, 3.12.2, 6.1.2, 15.1.5.2
Separate Contracts and Contractors
1.1.4, 3.12.5, 3.14.2, 4.2.6, 4.2.11, 6, 8.3.1, 12.1.2
Shop Drawings, Definition of
3.12.1
Shop Drawings, Product Data and Samples
3.11, **3.12**, 4.2.9, 4.2.10, 4.2.14
Site, Use of
3.13, 6.1.1, 6.2.1
Site Inspections
3.2.2, 3.3.3, 3.7.1, 3.7.4, 4.2.2, 4.2.3, 4.2.15, 9.4.3.3, 9.8.3, 9.9.2, 9.10.1, 13.5
Site Visits, Architect's
3.7.4, 4.2.2, 4.2.15, 9.8.3, 9.9.2, 9.10.1, 13.5
Special Inspections and Testing
4.2.8, 12.2.1, 13.5
Specifications, Definition of
1.1.6
Specifications
1.1.1, **1.1.6**, 1.2.2, 1.5, 3.11, 3.12.10, 3.17, 4.2.14
Staffing Plan
4.2.3
Statute of Limitations
12.2.5, 13.7, 15.4.1.1
Stopping the Work
2.3, 9.7, 10.3, 14.1
Stored Materials
6.2.1, 9.3.2, 10.2.1.2, 10.2.4
Subcontractor, Definition of
5.1.1
SUBCONTRACTORS
5
Subcontractors, Work by
1.2.2, 3.3.2, 3.12.1, 4.2.5, 5.2.3, 5.3, 5.4, 9.3.1.2, 9.6.7
Subcontractual Relations
5.3, 5.4, 9.3.1.2, 9.6.2, 9.6.3, 9.10, 10.2.1, 14.1, 14.2
Submittals
3.2.3, 3.10, 3.11, 3.12, 4.2.9, 4.2.10, 4.2.11, 5.2.1, 5.2.3, 7.3.7, 9.2, 9.3, 9.8, 9.9.1, 9.10.2, 9.10.3, 11.1.3
Submittal Schedule
3.10.2, 3.12.5, 4.2.9, 4.2.10
Subrogation, Waivers of
6.1.1, **11.3.7**
Substantial Completion
8.1.1, 8.1.3, 8.2.3, 9.4.3.3, **9.8**, 9.9.1, 9.10.3, 12.2.1, 12.2.2, 13.7
Substantial Completion, Definition of
9.8.1
Substitution of Subcontractors
5.2.3, 5.2.4
Substitution of Architect
4.1.4
Substitution of Construction Manager
4.1.4
Substitutions of Materials
3.4.2, 3.5, 7.3.8

Init.
/
AIA Document A232™ – 2009(rev. 12/11) (formerly A201™CMa – 1992). Copyright © 1992 and 2009 by The American Institute of Architects. All rights reserved. WARNING: This AIA® Document is protected by U.S. Copyright Law and International Treaties. Unauthorized reproduction or distribution of this AIA® Document, or any portion of it, may result in severe civil and criminal penalties, and will be prosecuted to the maximum extent possible under the law. This document was produced by AIA software at 14:33:23 on 04/16/2015 under Order No.1697299329_1 which expires on 01/26/2016, and is not for resale.
User Notes:
(1247311177)

Sub-subcontractor, Definition of
5.1.2
Subsurface Conditions
3.7.4
Successors and Assigns
13.2
Superintendent
3.9, 10.2.6
Supervision and Construction Procedures
1.2.2, **3.3**, 3.4, 3.12.10, 4.2.2, 4.2.3, 4.2.5, 4.2.8, 4.2.9, 4.2.10, 4.2.11, 6.1.3, 6.2.4, 7.1.3, 7.3.7, 8.2, 8.3.1, 9.4.3.3, 10, 12, 14, 15.1.3
Surety
5.4.1.2, 9.8.5, 9.10.2, 9.10.3, 14.2.2, 15.2.7
Surety, Consent of
9.10.2, 9.10.3
Surveys
1.1.7, 2.2.3
Suspension by the Owner for Convenience
14.3
Suspension of the Work
5.4.2, 14.3
Suspension or Termination of the Contract
5.4.1.1, 14
Taxes
3.6, 3.8.2.1, 7.3.7.4
Termination by the Contractor
14.1, 15.1.6
Termination by the Owner for Cause
5.4.1.1, **14.2**, 15.1.6
Termination by the Owner for Convenience
14.4
Termination of the Contractor
14.2.2
TERMINATION OR SUSPENSION OF THE CONTRACT
14
Tests and Inspections
3.1.4, 3.3.3, 4.2.2, 4.2.6, 4.2.8, 9.4.3.3, 9.8.3, 9.9.2, 9.10.1, 10.3.2, 12.2.1, **13.5**
TIME
8
Time, Delays and Extensions of
3.2.4, 3.7.4, 5.2.3, 7.2, 7.3.1, 7.4, **8.3**, 9.5.1, 10.3.2, 14.3.2, 15.1.5, 15.2.5
Time Limits
2.1.2, 2.2, 2.4, 3.2.2, 3.10, 3.11, 3.12.5, 3.15.1, 4.2.1, 5.2, 5.3, 5.4, 6.2.4, 7.3, 7.4, 8.2, 9.2, 9.3.1, 9.3.3, 9.4.1, 9.4.2, 9.5, 9.6, 9.7, 9.8, 9.9, 9.10, 11.1.3, 11.4, 12.2, 13.5, 13.7, 14, 15
Time Limits on Claims
3.7.4, 10.2.8, **13.7**, 15.1.2
Title to Work
9.3.2, 9.3.3
Transmission of Data in Digital Form
1.6
UNCOVERING AND CORRECTION OF WORK
12
Uncovering of Work
12.1
Unforeseen Conditions, Concealed or Unknown
3.7.4, 8.3.1, 10.3
Unit Prices
7.3.3.2, 7.3.4
Use of Documents
1.1.1, 1.5, 2.2.5, 3.12.6, 5.3
Use of Site
3.13, 6.1.1, 6.2.1
Values, Schedule of
9.2, 9.3.1
Waiver of Claims by the Architect
13.4.2
Waiver of Claims by the Construction Manager
13.4.2
Waiver of Claims by the Contractor
9.10.5, 13.4.2, 15.1.6
Waiver of Claims by the Owner
9.9.3, 9.10.3, 9.10.4, 12.2.2.1, 13.4.2, 14.2.4, 15.1.6
Waiver of Consequential Damages
14.2.4, 15.1.6
Waiver of Liens
9.10.2, 9.10.4
Waivers of Subrogation
6.1.1, **11.3.7**
Warranty
3.5, 4.2.15, 9.3.3, 9.8.4, 9.9.1, 9.10.4, 12.2.2
Weather Delays
15.1.5.2
Work, Definition of
1.1.3
Written Consent
1.5.2, 3.4.2, 3.7.4, 3.12.8, 3.14.2, 4.1.3, 9.3.2, 9.8.5, 9.9.1, 9.10.2, 9.10.3, 10.3.2, 11.4.1, 13.2, 13.4.2, 15.4.4.2
Written Interpretations
4.2.17, 4.2.18
Written Notice
2.3, 2.4, 3.3.1, 3.9, 3.12.9, 3.12.10, 5.2.1, 5.3, 5.4.1.1, 8.2.2, 9.4, 9.5.1, 9.7, 9.10, 10.2.2, 10.3, 11.1.3, 12.2.2, 12.2.4, **13.3**, 13.5.2, 14, 15.4.1
Written Orders
1.1.1, 2.3, 3.9, 7, 8.2.2, 12.1, 12.2, 13.5.2, 14.3.1, 15.1.2

Init.
/
AIA Document A232™ – 2009(rev. 12/11) (formerly A201™CMa – 1992). Copyright © 1992 and 2009 by The American Institute of Architects. All rights reserved. WARNING: This AIA® Document is protected by U.S. Copyright Law and International Treaties. Unauthorized reproduction or distribution of this AIA® Document, or any portion of it, may result in severe civil and criminal penalties, and will be prosecuted to the maximum extent possible under the law. This document was produced by AIA software at 14:33:23 on 04/16/2015 under Order No.1697299329_1 which expires on 01/26/2016, and is not for resale.
User Notes:

(1247311177)

ARTICLE 1 GENERAL PROVISIONS

§ 1.1 Basic Definitions

§ 1.1.1 The Contract Documents. The Contract Documents are enumerated in the Agreement between the Owner and Contractor (hereinafter the Agreement), and consist of the Agreement, Conditions of the Contract (General, Supplementary and other Conditions), Drawings, Specifications, Addenda issued prior to execution of the Contract, other documents listed in the Agreement and Modifications issued after execution of the Contract. A Modification is (1) a written amendment to the Contract signed by both parties, (2) a Change Order, (3) a Construction Change Directive or (4) a written order for a minor change in the Work issued by the Architect. Unless specifically enumerated in the Agreement, the Contract Documents do not include the advertisement or invitation to bid, Instructions to Bidders, sample forms, other information furnished by the Owner in anticipation of receiving bids or proposals, the Contractor's bid or proposal, or portions of addenda relating to bidding requirements).

§ 1.1.2 The Contract. The Contract Documents form the Contract for Construction. The Contract represents the entire and integrated agreement between the parties hereto and supersedes prior negotiations, representations or agreements, either written or oral. The Contract may be amended or modified only by a Modification. The Contract Documents shall not be construed to create a contractual relationship of any kind (1) between the Contractor and the Architect or the Architect's consultants, (2) between the Owner and the Construction Manager or the Construction Manager's consultants, (3) between the Owner and the Architect or the Architect's consultants, (4) between the Contractor and the Construction Manager or the Construction Manager's consultants, (5) between the Owner and a Subcontractor or Sub-subcontractor (6) between the Construction Manager and the Architect, or (7) between any persons or entities other than the Owner and Contractor. The Construction Manager and Architect shall, however, be entitled to performance and enforcement of obligations under the Contract intended to facilitate performance of their duties.

§ 1.1.3 The Work. The term "Work" means the construction and services required by the Contract Documents, whether completed or partially completed, and includes all other labor, materials, equipment and services provided or to be provided by the Contractor to fulfill the Contractor's obligations. The Work may constitute the whole or a part of the Project.

§ 1.1.4 The Project. The Project is the total construction of which the Work performed under the Contract Documents may be the whole or a part and which may include construction by other Multiple Prime Contractors and by the Owner's own forces, including persons or entities under separate contracts not administered by the Construction Manager.

§ 1.1.5 The Drawings. The Drawings are the graphic and pictorial portions of the Contract Documents showing the design, location and dimensions of the Work, generally including plans, elevations, sections, details, schedules and diagrams.

§ 1.1.6 The Specifications. The Specifications are that portion of the Contract Documents consisting of the written requirements for materials, equipment, systems, standards and workmanship for the Work, and performance of related services.

§ 1.1.7 Instruments of Service. Instruments of Service are representations, in any medium of expression now known or later developed, of the tangible and intangible creative work performed by the Architect and the Architect's consultants under their respective professional services agreements. Instruments of Service may include, without limitation, studies, surveys, models, sketches, drawings, specifications, and other similar materials.

§ 1.1.8 Initial Decision Maker. The Initial Decision Maker is the person identified in the Agreement to render initial decisions on Claims in accordance with Section 15.2 and certify termination of the Agreement under Section 14.2.2.

§ 1.2 Correlation and Intent of the Contract Documents

§ 1.2.1 The intent of the Contract Documents is to include all items necessary for the proper execution and completion of the Work by the Contractor. The Contract Documents are complementary, and what is required by one shall be as binding as if required by all; performance by the Contractor shall be required only to the extent consistent with the Contract Documents and reasonably inferable from them as being necessary to produce the indicated results.

AIA Document A232™ – 2009(rev. 12/11) (formerly A201™CMa – 1992). Copyright © 1992 and 2009 by The American Institute of Architects. All rights reserved. WARNING: This AIA® Document is protected by U.S. Copyright Law and International Treaties. Unauthorized reproduction or distribution of this AIA® Document, or any portion of it, may result in severe civil and criminal penalties, and will be prosecuted to the maximum extent possible under the law. This document was produced by AIA software at 14:33:23 on 04/16/2015 under Order No.1697299329_1 which expires on 01/26/2016, and is not for resale.
User Notes:

(1247311177)

§ 1.2.2 Organization of the Specifications into divisions, sections and articles, and arrangement of Drawings shall not control the Contractor in dividing the Work among Subcontractors or in establishing the extent of Work to be performed by any trade.

§ 1.2.3 Unless otherwise stated in the Contract Documents, words that have well-known technical or construction industry meanings are used in the Contract Documents in accordance with such recognized meanings.

§ 1.3 Capitalization

Terms capitalized in these General Conditions include those that are (1) specifically defined, (2) the titles of numbered articles or (3) the titles of other documents published by the American Institute of Architects.

§ 1.4 Interpretation

In the interest of brevity the Contract Documents frequently omit modifying words such as "all" and "any" and articles such as "the" and "an," but the fact that a modifier or an article is absent from one statement and appears in another is not intended to affect the interpretation of either statement.

§ 1.5 Ownership and Use of Drawings, Specifications and Other Instruments of Service

§ 1.5.1 The Architect and the Architect's consultants shall be deemed the authors and owners of their respective Instruments of Service, including the Drawings and Specifications, and will retain all common law, statutory and other reserved rights, including copyrights. The Contractor, Subcontractors, sub-subcontractors, and material or equipment suppliers shall not own or claim a copyright in the Instruments of Service. Submittal or distribution to meet official regulatory requirements or for other purposes in connection with this Project is not to be construed as publication in derogation of the Architect, or Architect's consultants' reserved rights.

§ 1.5.2 The Contractor, Subcontractors, Sub-subcontractors, and material or equipment suppliers are authorized to use and reproduce the Instruments of Service provided to them solely and exclusively for execution of the Work. All copies made under this authorization shall bear the copyright notice, if any, shown on the Instruments of Service. The Contractor, Subcontractors, Sub-subcontractors, and material or equipment suppliers may not use the Instruments of Service on other projects or for additions to this Project outside the scope of the Work without the specific written consent of the Owner, Architect and the Architect's consultants.

§ 1.6 Transmission of Data in Digital Form

If the parties intend to transmit Instruments of Service or any other information or documentation in digital form, they shall endeavor to establish necessary protocols governing such transmissions, unless otherwise already provided in the Agreement or the Contract Documents.

ARTICLE 2 OWNER

§ 2.1 General

§ 2.1.1 The Owner is the person or entity identified as such in the Agreement and is referred to throughout the Contract Documents as if singular in number. The Owner shall designate in writing a representative who shall have express authority to bind the Owner with respect to all matters requiring the Owner's approval or authorization. Except as otherwise provided in Article 4, the Construction Manager and the Architect do not have such authority. The term "Owner" means the Owner or the Owner's authorized representative.

§ 2.1.2 The Owner shall furnish to the Contractor within fifteen days after receipt of a written request, information necessary and relevant for the Contractor to evaluate, give notice of or enforce mechanic's lien rights. Such information shall include a correct statement of the record legal title to the property on which the Project is located, usually referred to as the site, and the Owner's interest therein.

§ 2.2 Information and Services Required of the Owner

§ 2.2.1 Prior to commencement of the Work, the Contractor may request in writing that the Owner provide reasonable evidence that the Owner has made financial arrangements to fulfill the Owner's obligations under the Contract. Thereafter, the Contractor may only request such evidence if (1) the Owner fails to make payments to the Contractor as the Contract Documents require; (2) a change in the Work materially changes the Contract Sum; or (3) the Contractor identifies in writing a reasonable concern regarding the Owner's ability to make payment when due. The Owner shall furnish such evidence as a condition precedent to commencement or continuation of the Work or

AIA Document A232™ – 2009(rev. 12/11) (formerly A201™CMa – 1992). Copyright © 1992 and 2009 by The American Institute of Architects. All rights reserved. WARNING: This AIA® Document is protected by U.S. Copyright Law and International Treaties. Unauthorized reproduction or distribution of this AIA® Document, or any portion of it, may result in severe civil and criminal penalties, and will be prosecuted to the maximum extent possible under the law. This document was produced by AIA software at 14:33:23 on 04/16/2015 under Order No.1697299329_1 which expires on 01/26/2016, and is not for resale.
User Notes:

(1247311177)

the portion of the Work affected by a material change. After the Owner furnishes the evidence, the Owner shall not materially vary such financial arrangements without prior notice to the Contractor.

§ **2.2.2** Except for permits and fees that are the responsibility of the Contractor under the Contract Documents, including those required under Section 3.7.1, the Owner shall secure and pay for necessary approvals, easements, assessments and charges required for construction, use or occupancy of permanent structures or for permanent changes in existing facilities. Unless otherwise provided under the Contract Documents, the Owner, through the Construction Manager, shall secure and pay for the building permit.

§ **2.2.3** The Owner shall furnish surveys describing physical characteristics, legal limitations and utility locations for the site of the Project, and a legal description of the site. The Contractor shall be entitled to rely on the accuracy of information furnished by the Owner but shall exercise proper precautions relating to the safe performance of the Work.

§ **2.2.4** The Owner shall furnish information or services required of the Owner by the Contract Documents with reasonable promptness. The Owner shall also furnish any other information or services under the Owner's control and relevant to the Contractor's performance of the Work with reasonable promptness after receiving the Contractor's written request for such information or services.

§ **2.2.5** Unless otherwise provided in the Contract Documents, the Owner shall furnish to the Contractor one copy of the Contract Documents for purposes of making reproductions pursuant to Section 1.5.2.

§ **2.2.6** The Owner shall endeavor to forward all communications to the Contractor through the Construction Manager and shall contemporaneously provide the same communications to the Architect about matters arising out of or relating to the Contract Documents.

§ 2.3 Owner's Right to Stop the Work

If the Contractor fails to correct Work that is not in accordance with the requirements of the Contract Documents as required by Section 12.2 or repeatedly fails to carry out Work in accordance with the Contract Documents, the Owner may issue a written order to the Contractor to stop the Work, or any portion thereof, until the cause for such order has been eliminated; however, the right of the Owner to stop the Work shall not give rise to a duty on the part of the Owner to exercise this right for the benefit of the Contractor or any other person or entity, except to the extent required by Section 6.1.3.

§ 2.4 Owner's Right to Carry Out the Work

If the Contractor defaults or neglects to carry out the Work in accordance with the Contract Documents and fails within a ten-day period after receipt of written notice from the Owner to commence and continue correction of such default or neglect with diligence and promptness, the Owner may, without prejudice to other remedies the Owner may have, correct such deficiencies. In such case an appropriate Change Order shall be issued deducting from payments then or thereafter due the Contractor the reasonable cost of correcting such deficiencies, including Owner's expenses and compensation for the Construction Manager's and Architect's and their respective consultants' additional services made necessary by such default, neglect or failure. Such action by the Owner and amounts charged to the Contractor are both subject to prior approval of the Architect, after consultation with the Construction Manager. If payments then or thereafter due the Contractor are not sufficient to cover such amounts, the Contractor shall pay the difference to the Owner.

ARTICLE 3 CONTRACTOR

§ 3.1 General

§ **3.1.1** The Contractor is the person or entity identified as such in the Agreement and is referred to throughout the Contract Documents as if singular in number. The Contractor shall be lawfully licensed, if required in the jurisdiction where the Project is located. The Contractor shall designate in writing a representative who shall have express authority to bind the Contractor with respect to all matters under this Contract. The term "Contractor" means the Contractor or the Contractor's authorized representative.

§ **3.1.2** The plural term "Multiple Prime Contractors" refers to persons or entities who perform construction under contracts with the Owner that are administered by the Construction Manager. The term does not include the Owner's own forces, including persons or entities under separate contracts not administered by the Construction Manager.

AIA Document A232™ – 2009(rev. 12/11) (formerly A201™CMa – 1992). Copyright © 1992 and 2009 by The American Institute of Architects. All rights reserved. WARNING: This AIA® Document is protected by U.S. Copyright Law and International Treaties. Unauthorized reproduction or distribution of this AIA® Document, or any portion of it, may result in severe civil and criminal penalties, and will be prosecuted to the maximum extent possible under the law. This document was produced by AIA software at 14:33:23 on 04/16/2015 under Order No.1697299329_1 which expires on 01/26/2016, and is not for resale.
User Notes:

(1247311177)

§ **3.1.3** The Contractor shall perform the Work in accordance with the Contract Documents.

§ **3.1.4** The Contractor shall not be relieved of obligations to perform the Work in accordance with the Contract Documents either by activities or duties of the Construction Manager or Architect in their administration of the Contract, or by tests, inspections or approvals required or performed by persons or entities other than the Contractor.

§ 3.2 Review of Contract Documents and Field Conditions by Contractor

§ **3.2.1** Execution of the Contract by the Contractor is a representation that the Contractor has visited the site, become generally familiar with local conditions under which the Work is to be performed and correlated personal observations with requirements of the Contract Documents.

§ **3.2.2** Because the Contract Documents are complementary, the Contractor shall, before starting each portion of the Work, carefully study and compare the various Contract Documents relative to that portion of the Work, as well as the information furnished by the Owner pursuant to Section 2.2.3, shall take field measurements of any existing conditions related to that portion of the Work, and shall observe any conditions at the site affecting it. These obligations are for the purpose of facilitating coordination and construction by the Contractor and are not for the purpose of discovering errors, omissions, or inconsistencies in the Contract Documents; however, the Contractor shall promptly report to the Construction Manager and Architect any errors, inconsistencies or omissions discovered by or made known to the Contractor as a request for information submitted to the Construction Manager in such form as the Construction Manager and Architect may require. It is recognized that the Contractor's review is made in the Contractor's capacity as a contractor and not as a licensed design professional, unless otherwise specifically provided in the Contract Documents.

§ **3.2.3** The Contractor is not required to ascertain that the Contract Documents are in accordance with applicable laws, statutes, ordinances, codes, rules and regulations, or lawful orders of public authorities, but the Contractor shall promptly report to the Construction Manager and Architect any nonconformity discovered by or made known to the Contractor as a request for information submitted to Construction Manager in such form as the Construction Manager and Architect may require.

§ **3.2.4** If the Contractor believes that additional cost or time is involved because of clarifications or instructions the Architect issues in response to the Contractor's notices or requests for information pursuant to Sections 3.2.2 or 3.2.3, the Contractor shall make Claims as provided in Article 15. If the Contractor fails to perform the obligations of Sections 3.2.2 or 3.2.3, the Contractor shall pay such costs and damages to the Owner as would have been avoided if the Contractor had performed such obligations. If the Contractor performs those obligations, the Contractor shall not be liable to the Owner or Architect for damages resulting from errors, inconsistencies or omissions in the Contract Documents, for differences between field measurements or conditions and the Contract Documents, or for nonconformities of the Contract Documents to applicable laws, statutes, ordinances, codes, rules and regulations, and lawful orders of public authorities.

§ 3.3 Supervision and Construction Procedures

§ **3.3.1** The Contractor shall supervise and direct the Work, using the Contractor's best skill and attention. The Contractor shall be solely responsible for, and have control over, construction means, methods, techniques, sequences and procedures and for coordinating all portions of the Work under the Contract, unless the Contract Documents give other specific instruction concerning these matters. If the Contract Documents give specific instructions concerning construction means, methods, techniques, sequences or procedures, the Contractor shall evaluate the jobsite safety thereof and, except as stated below, shall be fully and solely responsible for the jobsite safety of such means, methods, techniques, sequences or procedures. If the Contractor determines that such means, methods, techniques, sequences or procedures may not be safe, the Contractor shall give timely written notice to the Owner, the Construction Manager, and the Architect and shall not proceed with that portion of the Work without further written instructions from the Architect, through the Construction Manager. If the Contractor is then instructed to proceed with the required means, methods, techniques, sequences or procedures without acceptance of changes proposed by the Contractor, the Owner shall be solely responsible for any loss or damage arising solely from those Owner-required means, methods, techniques, sequences or procedures.

AIA Document A232™ – 2009(rev. 12/11) (formerly A201™CMa – 1992). Copyright © 1992 and 2009 by The American Institute of Architects. **All rights reserved. WARNING: This AIA® Document is protected by U.S. Copyright Law and International Treaties. Unauthorized reproduction or distribution of this AIA® Document, or any portion of it, may result in severe civil and criminal penalties, and will be prosecuted to the maximum extent possible under the law.** This document was produced by AIA software at 14:33:23 on 04/16/2015 under Order No.1697299329_1 which expires on 01/26/2016, and is not for resale.
User Notes:

(1247311177)

§ 3.3.2 The Contractor shall be responsible to the Owner for acts and omissions of the Contractor's employees, Subcontractors and their agents and employees, and other persons performing portions of the Work for, or on behalf of, the Contractor or any of its Subcontractors.

§ 3.3.3 The Contractor shall be responsible for inspection of portions of the Project already performed to determine that such portions are in proper condition to receive subsequent Work.

§ 3.4 Labor and Materials

§ 3.4.1 Unless otherwise provided in the Contract Documents, the Contractor shall provide and pay for labor, materials, equipment, tools, construction equipment and machinery, water, heat, utilities, transportation, and other facilities and services necessary for proper execution and completion of the Work, whether temporary or permanent and whether or not incorporated or to be incorporated in the Work.

§ 3.4.2 Except in the case of minor changes in the Work authorized by the Architect in accordance with Sections 3.12.8 or 7.4, the Contractor may make substitutions only with the consent of the Owner, after evaluation by the Architect, in consultation with the Construction Manager, and in accordance with a Change Order or Construction Change Directive.

§ 3.4.3 The Contractor shall enforce strict discipline and good order among the Contractor's employees and other persons carrying out the Work. The Contractor shall not permit employment of unfit persons or persons not properly skilled in tasks assigned to them.

§ 3.5 Warranty

The Contractor warrants to the Owner, Construction Manager, and Architect that materials and equipment furnished under the Contract will be of good quality and new unless the Contract Documents require or permit otherwise. The Contractor further warrants that the Work will conform with the requirements of the Contract Documents and will be free from defects, except for those inherent in the quality of the Work the Contract Documents require or permit. Work, materials, or equipment not conforming to these requirements may be considered defective. The Contractor's warranty excludes remedy for damage or defect caused by abuse, alterations to the Work not executed by the Contractor, improper or insufficient maintenance, improper operation, or normal wear and tear and normal usage. If required by the Construction Manager or Architect, the Contractor shall furnish satisfactory evidence as to the kind and quality of materials and equipment.

§ 3.6 Taxes

The Contractor shall pay sales, consumer, use and similar taxes for the Work or portions thereof provided by the Contractor that are legally enacted when bids are received or negotiations concluded, whether or not yet effective or merely scheduled to go into effect.

§ 3.7 Permits, Fees, Notices, and Compliance with Laws

§ 3.7.1 Unless otherwise provided in the Contract Documents, the Owner, through the Construction Manager, shall secure and pay for the building permit. The Contractor shall secure and pay for other permits, fees, licenses and inspections by government agencies necessary for proper execution and completion of the Work that are customarily secured after execution of the Contract and legally required at the time bids are received or negotiations concluded.

§ 3.7.2 The Contractor shall comply with and give notices required by applicable laws, statutes, ordinances, codes, rules and regulations, and lawful orders of public authorities applicable to performance of the Work.

§ 3.7.3 If the Contractor performs Work knowing it to be contrary to applicable laws, statutes, ordinances, codes, rules and regulations, or lawful orders of public authorities, the Contractor shall assume appropriate responsibility for such Work and shall bear the costs attributable to correction.

§ 3.7.4 Concealed or Unknown Conditions. If the Contractor encounters conditions at the site that are (1) subsurface or otherwise concealed physical conditions that differ materially from those indicated in the Contract Documents or (2) unknown physical conditions of an unusual nature that differ materially from those ordinarily found to exist and generally recognized as inherent in construction activities of the character provided for in the Contract Documents, the Contractor shall promptly provide notice to the Owner, Construction Manager, and the Architect before conditions are disturbed and in no event later than 21 days after first observance of the conditions. The Architect and

AIA Document A232™ – 2009(rev. 12/11) (formerly A201™CMa – 1992). Copyright © 1992 and 2009 by The American Institute of Architects. All rights reserved. WARNING: This AIA® Document is protected by U.S. Copyright Law and International Treaties. Unauthorized reproduction or distribution of this AIA® Document, or any portion of it, may result in severe civil and criminal penalties, and will be prosecuted to the maximum extent possible under the law. This document was produced by AIA software at 14:33:23 on 04/16/2015 under Order No.1697299329_1 which expires on 01/26/2016, and is not for resale.
User Notes:

(1247311177)

Construction Manager will promptly investigate such conditions and, if the Architect, in consultation with the Construction Manager, determines that they differ materially and cause an increase or decrease in the Contractor's cost of, or time required for, performance of any part of the Work, will recommend an equitable adjustment in the Contract Sum or Contract Time, or both. If the Architect, in consultation with the Construction Manager, determines that the conditions at the site are not materially different from those indicated in the Contract Documents and that no change in the terms of the Contract is justified, the Architect shall promptly notify the Owner, Construction Manager, and Contractor in writing, stating the reasons. If the Owner or Contractor disputes the Architect's determination or recommendation, either party may proceed as provided in Article 15.

§ **3.7.5** If, in the course of the Work, the Contractor encounters human remains or recognizes the existence of burial markers, archaeological sites or wetlands not indicated in the Contract Documents, the Contractor shall immediately suspend any operations that would affect them and shall notify the Owner, Construction Manager, and Architect. Upon receipt of such notice, the Owner shall promptly take any action necessary to obtain governmental authorization required to resume the operations. The Contractor shall continue to suspend such operations until otherwise instructed by the Owner but shall continue with all other operations that do not affect those remains or features. Requests for adjustments in the Contract Sum and Contract Time arising from the existence of such remains or features may be made as provided in Article 15.

§ 3.8 Allowances

§ **3.8.1** The Contractor shall include in the Contract Sum all allowances stated in the Contract Documents. Items covered by allowances shall be supplied for such amounts and by such persons or entities as the Owner may direct, but the Contractor shall not be required to employ persons or entities to whom the Contractor has reasonable objection.

§ **3.8.2** Unless otherwise provided in the Contract Documents:

- **.1** Allowances shall cover the cost to the Contractor of materials and equipment delivered at the site and all required taxes, less applicable trade discounts;
- **.2** Contractor's costs for unloading and handling at the site, labor, installation costs, overhead, profit and other expenses contemplated for stated allowance amounts shall be included in the Contract Sum but not in the allowances; and
- **.3** Whenever costs are more than or less than allowances, the Contract Sum shall be adjusted accordingly by Change Order. The amount of the Change Order shall reflect (1) the difference between actual costs and the allowances under Section 3.8.2.1 and (2) changes in Contractor's costs under Section 3.8.2.2.

§ **3.8.3** Materials and equipment under an allowance shall be selected by the Owner with reasonable promptness.

§ 3.9 Superintendent

§ **3.9.1** The Contractor shall employ a competent superintendent and necessary assistants who shall be in attendance at the Project site during performance of the Work. The superintendent shall represent the Contractor, and communications given to the superintendent shall be as binding as if given to the Contractor.

§ **3.9.2** The Contractor, as soon as practicable after award of the Contract, shall furnish in writing to the Owner and Architect through the Construction Manager, the name and qualifications of a proposed superintendent. The Construction Manager may reply within 14 days to the Contractor in writing stating (1) whether the Owner, the Construction Manager, or the Architect has reasonable objection to the proposed superintendent or (2) that any of them require additional time to review. Failure of the Construction Manager to reply within the 14 day period shall constitute notice of no reasonable objection.

§ **3.9.3** The Contractor shall not employ a proposed superintendent to whom the Owner, Construction Manager or Architect has made reasonable and timely objection. The Contractor shall not change the superintendent without the Owner's consent, which shall not unreasonably be withheld or delayed.

§ 3.10 Contractor's Construction Schedules

§ **3.10.1** The Contractor, promptly after being awarded the Contract, shall prepare and submit for the Owner's and Architect's information and the Construction Manager's approval a Contractor's construction schedule for the Work. The schedule shall not exceed time limits current under the Contract Documents, shall be revised at

Init.

AIA Document A232™ – 2009(rev. 12/11) (formerly A201™CMa – 1992). Copyright © 1992 and 2009 by The American Institute of Architects. All rights reserved. WARNING: This AIA® Document is protected by U.S. Copyright Law and International Treaties. Unauthorized reproduction or distribution of this AIA® Document, or any portion of it, may result in severe civil and criminal penalties, and will be prosecuted to the maximum extent possible under the law. This document was produced by AIA software at 14:33:23 on 04/16/2015 under Order No.1697299329_1 which expires on 01/26/2016, and is not for resale.
User Notes:

(1247311177)

appropriate intervals as required by the conditions of the Work and Project, shall be related to the entire Project schedule to the extent required by the Contract Documents, and shall provide for expeditious and practicable execution of the Work. The Contractor shall cooperate with the Construction Manager in scheduling and performing the Contractor's Work to avoid conflict with, and as to cause no delay in, the work or activities of other Multiple Prime Contractors or the construction or operations of the Owner's own forces.

§ 3.10.2 The Contractor shall prepare a submittal schedule, promptly after being awarded the Contract and thereafter update it as necessary to maintain a current submittal schedule, and shall submit the schedule(s) for the Construction Manager's and Architect's approval. The Architect and Construction Manager's approval shall not unreasonably be delayed or withheld. The submittal schedule shall (1) be coordinated with the Contractor's construction schedule, and (2) allow the Construction Manager and Architect reasonable time to review submittals. If the Contractor fails to submit a submittal schedule, the Contractor shall not be entitled to any increase in Contract Sum or extension of Contract Time based on the time required for review of submittals.

§ 3.10.3 The Contractor shall participate with other Contractors, the Construction Manager and Owner in reviewing and coordinating all schedules for incorporation into the Project schedule that is prepared by the Construction Manager. The Contractor shall make revisions to the construction schedule and submittal schedule as deemed necessary by the Construction Manager to conform to the Project schedule.

§ 3.10.4 The Contractor shall perform the Work in general accordance with the most recent schedules submitted to the Owner, Construction Manager and Architect and incorporated into the approved Project schedule.

§ 3.11 Documents and Samples at the Site

The Contractor shall maintain at the site for the Owner one copy of the Drawings, Specifications, Addenda, Change Orders and other Modifications, in good order and marked currently to indicate field changes and selections made during construction, and one copy of approved Shop Drawings, Product Data, Samples and similar required submittals. These documents shall be available to the Architect and delivered to the Construction Manager for submittal to the Owner upon completion of the Work as a record of the Work as constructed.

§ 3.12 Shop Drawings, Product Data and Samples

§ 3.12.1 Shop Drawings are drawings, diagrams, schedules and other data specially prepared for the Work by the Contractor or a Subcontractor, Sub-subcontractor, manufacturer, supplier or distributor to illustrate some portion of the Work.

§ 3.12.2 Product Data are illustrations, standard schedules, performance charts, instructions, brochures, diagrams and other information furnished by the Contractor to illustrate materials or equipment for some portion of the Work.

§ 3.12.3 Samples are physical examples that illustrate materials, equipment or workmanship and establish standards by which the Work will be judged.

§ 3.12.4 Shop Drawings, Product Data, Samples and similar submittals are not Contract Documents. Their purpose is to demonstrate the way by which the Contractor proposes to conform to the information given and the design concept expressed in the Contract Documents for those portions of the Work for which the Contract Documents require submittals. Review by the Architect and Construction Manager is subject to the limitations of Sections 4.2.9 through 4.2.11. Informational submittals upon which the Construction Manager and Architect are not expected to take responsive action may be so identified in the Contract Documents. Submittals that are not required by the Contract Documents may be returned by the Construction Manager or Architect without action.

§ 3.12.5 The Contractor shall review for compliance with the Contract Documents, approve and submit to the Construction Manager Shop Drawings, Product Data, Samples and similar submittals required by the Contract Documents in accordance with the Project submittal schedule approved by the Construction Manager and Architect, or in the absence of an approved Project submittal schedule, with reasonable promptness and in such sequence as to cause no delay in the Work or in the activities of other Multiple Prime Contractors or the Owner's own forces. The Contractor shall cooperate with the Construction Manager in the coordination of the Contractor's Shop Drawings, Product Data, Samples and similar submittals with related documents submitted by other Multiple Prime Contractors.

AIA Document A232™ – 2009(rev. 12/11) (formerly A201™CMa – 1992). Copyright © 1992 and 2009 by The American Institute of Architects. **All rights reserved. WARNING: This AIA® Document is protected by U.S. Copyright Law and International Treaties. Unauthorized reproduction or distribution of this AIA® Document, or any portion of it, may result in severe civil and criminal penalties, and will be prosecuted to the maximum extent possible under the law.** This document was produced by AIA software at 14:33:23 on 04/16/2015 under Order No.1697299329_1 which expires on 01/26/2016, and is not for resale.
User Notes:

(1247311177)

§ 3.12.6 By submitting Shop Drawings, Product Data, Samples and similar submittals, the Contractor represents to the Owner, Construction Manager, and Architect, that the Contractor has (1) reviewed and approved them, (2) determined and verified materials, field measurements and field construction criteria related thereto, or will do so and (3) checked and coordinated the information contained within such submittals with the requirements of the Work and of the Contract Documents.

§ 3.12.7 The Contractor shall perform no portion of the Work for which the Contract Documents require submittal and review of Shop Drawings, Product Data, Samples or similar submittals until the respective submittal has been reviewed and approved by the Architect.

§ 3.12.8 The Work shall be in accordance with approved submittals except that the Contractor shall not be relieved of responsibility for deviations from requirements of the Contract Documents by the Architect's approval of Shop Drawings, Product Data, Samples or similar submittals unless the Contractor has specifically informed the Construction Manager and Architect in writing of such deviation at the time of submittal and (1) the Architect has given written approval to the specific deviation as a minor change in the Work, or (2) a Change Order or Construction Change Directive has been issued authorizing the deviation. The Contractor shall not be relieved of responsibility for errors or omissions in Shop Drawings, Product Data, Samples or similar submittals by the Architect's approval thereof.

§ 3.12.9 The Contractor shall direct specific attention, in writing or on resubmitted Shop Drawings, Product Data, Samples or similar submittals, to revisions other than those requested by the Construction Manager and Architect on previous submittals. In the absence of such written notice, the Architect's approval of a resubmission shall not apply to such revisions.

§ 3.12.10 The Contractor shall not be required to provide professional services that constitute the practice of architecture or engineering unless such services are specifically required by the Contract Documents for a portion of the Work or unless the Contractor needs to provide such services in order to carry out the Contractor's responsibilities for construction means, methods, techniques, sequences and procedures. The Contractor shall not be required to provide professional services in violation of applicable law. If professional design services or certifications by a design professional related to systems, materials or equipment are specifically required of the Contractor by the Contract Documents, the Owner and the Architect will specify all performance and design criteria that such services must satisfy. The Contractor shall cause such services or certifications to be provided by a properly licensed design professional, whose signature and seal shall appear on all drawings, calculations, specifications, certifications, Shop Drawings and other submittals prepared by such professional. Shop Drawings and other submittals related to the Work designed or certified by such professional, if prepared by others, shall bear such professional's written approval when submitted to the Architect. The Owner and the Architect shall be entitled to rely upon the adequacy, accuracy and completeness of the services, certifications and approvals performed or provided by such design professionals, provided the Owner and Architect have specified to the Contractor all performance and design criteria that such services must satisfy. Pursuant to this Section 3.12.10, the Architect will review, approve or take other appropriate action on submittals only for the limited purpose of checking for conformance with information given and the design concept expressed in the Contract Documents. The Contractor shall not be responsible for the adequacy of the performance and design criteria specified in the Contract Documents.

§ 3.13 Use of Site

§ 3.13.1 The Contractor shall confine operations at the site to areas permitted by applicable laws, statutes, ordinances, codes, rules and regulations, and lawful orders of public authorities and the Contract Documents and shall not unreasonably encumber the site with materials or equipment.

§ 3.13.2 The Contractor shall coordinate the Contractor's operations with, and secure the approval of, the Construction Manager before using any portion of the site.

§ 3.14 Cutting and Patching

§ 3.14.1 The Contractor shall be responsible for cutting, fitting or patching required to complete the Work or to make its parts fit together properly. All areas requiring cutting, fitting and patching shall be restored to the condition existing prior to the cutting, fitting and patching, unless otherwise required by the Contract Documents.

AIA Document A232™ – 2009(rev. 12/11) (formerly A201™CMa – 1992). Copyright © 1992 and 2009 by The American Institute of Architects. All rights reserved. WARNING: This AIA® Document is protected by U.S. Copyright Law and International Treaties. Unauthorized reproduction or distribution of this AIA® Document, or any portion of it, may result in severe civil and criminal penalties, and will be prosecuted to the maximum extent possible under the law. This document was produced by AIA software at 14:33:23 on 04/16/2015 under Order No.1697299329_1 which expires on 01/26/2016, and is not for resale.
User Notes:

§ 3.14.2 The Contractor shall not damage or endanger a portion of the Work or fully or partially completed construction of the Owner's own forces or of other Multiple Prime Contractors by cutting, patching, or otherwise altering such construction, or by excavation. The Contractor shall not cut or otherwise alter such construction by the Owner's own forces or by other Multiple Prime Contractors except with written consent of the Construction Manager, Owner and such other Multiple Prime Contractors; such consent shall not be unreasonably withheld. The Contractor shall not unreasonably withhold from the other Multiple Prime Contractors or the Owner the Contractor's consent to cutting or otherwise altering the Work.

§ 3.15 Cleaning Up

§ 3.15.1 The Contractor shall keep the premises and surrounding area free from accumulation of waste materials or rubbish caused by operations under the Contract. At completion of the Work the Contractor shall remove waste materials, rubbish, the Contractor's tools, construction equipment, machinery and surplus materials from and about the Project.

§ 3.15.2 If the Contractor fails to clean up as provided in the Contract Documents, the Owner, or Construction Manager with the Owner's approval, may do so and the Owner shall be entitled to reimbursement from the Contractor.

§ 3.16 Access to Work

The Contractor shall provide the Owner, Construction Manager and Architect access to the Work in preparation and progress wherever located.

§ 3.17 Royalties, Patents and Copyrights

The Contractor shall pay all royalties and license fees. The Contractor shall defend suits or claims for infringement of copyrights and patent rights and shall hold the Owner, Construction Manager and Architect harmless from loss on account thereof, but shall not be responsible for such defense or loss when a particular design, process or product of a particular manufacturer or manufacturers is required by the Contract Documents or where the copyright violations are contained in Drawings, Specifications or other documents prepared by the Owner, Architect, or Construction Manager. However, if the Contractor has reason to believe that the required design, process or product is an infringement of a copyright or a patent, the Contractor shall be responsible for such loss unless such information is promptly furnished to the Architect through the Construction Manager.

§ 3.18 Indemnification

§ 3.18.1 To the fullest extent permitted by law, the Contractor shall indemnify and hold harmless the Owner, Construction Manager, Architect, Construction Manager's and Architect's consultants, and agents and employees of any of them from and against claims, damages, losses and expenses, including but not limited to attorneys' fees, arising out of or resulting from performance of the Work, provided that such claim, damage, loss or expense is attributable to bodily injury, sickness, disease or death, or to injury to or destruction of tangible property (other than the Work itself) but only to the extent caused by the negligent acts or omissions of the Contractor, a Subcontractor, anyone directly or indirectly employed by them or anyone for whose acts they may be liable, regardless of whether or not such claim, damage, loss or expense is caused in part by a party indemnified hereunder. Such obligation shall not be construed to negate, abridge or reduce other rights or obligations of indemnity that would otherwise exist as to a party or person described in this Section 3.18.

§ 3.18.2 In claims against any person or entity indemnified under this Section 3.18 by an employee of the Contractor, a Subcontractor, anyone directly or indirectly employed by them or anyone for whose acts they may be liable, the indemnification obligation under Section 3.18 shall not be limited by a limitation on amount or type of damages, compensation or benefits payable by or for the Contractor or a Subcontractor under workers' compensation acts, disability benefit acts or other employee benefit acts.

ARTICLE 4 ARCHITECT AND CONSTRUCTION MANAGER

§ 4.1 General

§ 4.1.1 The Owner shall retain an architect lawfully licensed to practice architecture or an entity lawfully practicing architecture in the jurisdiction where the Project is located. That person or entity is identified as the Architect in the Agreement and is referred to throughout the Contract Documents as if singular in number.

AIA Document A232™ – 2009(rev. 12/11) (formerly A201™CMa – 1992). Copyright © 1992 and 2009 by The American Institute of Architects. All rights reserved. WARNING: This AIA® Document is protected by U.S. Copyright Law and International Treaties. Unauthorized reproduction or distribution of this AIA® Document, or any portion of it, may result in severe civil and criminal penalties, and will be prosecuted to the maximum extent possible under the law. This document was produced by AIA software at 14:33:23 on 04/16/2015 under Order No.1697299329_1 which expires on 01/26/2016, and is not for resale.
User Notes:

(1247311177)

§ **4.1.2** The Owner shall retain a construction manager lawfully licensed to practice construction management or an entity lawfully practicing construction management in the jurisdiction where the Project is located. That person or entity is identified as the Construction Manager in the Agreement and is referred to throughout the Contract Documents as if singular in number.

§ **4.1.3** Duties, responsibilities and limitations of authority of the Construction Manager and Architect as set forth in the Contract Documents shall not be restricted, modified or extended without written consent of the Owner, Construction Manager, Architect and Contractor. Consent shall not be unreasonably withheld.

§ **4.1.4** If the employment of the Construction Manager or Architect is terminated, the Owner shall employ a successor construction manager or architect as to whom the Contractor has no reasonable objection and whose status under the Contract Documents shall be that of the Construction Manager or Architect, respectively.

§ 4.2 Administration of the Contract

§ **4.2.1** The Construction Manager and Architect will provide administration of the Contract as described in the Contract Documents and will be the Owner's representatives during construction until the date the Architect issues the final Certificate for Payment. The Construction Manager and Architect will have authority to act on behalf of the Owner only to the extent provided in the Contract Documents.

§ **4.2.2** The Architect will visit the site at intervals appropriate to the stage of construction, or as otherwise agreed with the Owner, to become generally familiar with the progress and quality of the portion of the Work completed, and to determine in general if the Work observed is being performed in a manner indicating that the Work, when fully completed, will be in accordance with the Contract Documents. However, the Architect will not be required to make exhaustive or continuous on-site inspections to check the quality or quantity of the Work. On the basis of the site visits, the Architect will keep the Owner reasonably informed about the progress and quality of the portion of the Work completed, and report to the Owner and Construction Manager (1) known deviations from the Contract Documents and from the most recent Project schedule prepared by the Construction Manager, and (2) defects and deficiencies observed in the Work.

§ **4.2.3** The Construction Manager shall provide a staffing plan to include one or more representatives who shall be in attendance at the Project site whenever the Work is being performed. The Construction Manager will determine in general if the Work observed is being performed in accordance with the Contract Documents, will keep the Owner reasonably informed of the progress of the Work, and will report to the Owner and Architect (1) known deviations from the Contract Documents and the most recent Project schedule, and (2) defects and deficiencies observed in the Work.

§ **4.2.4** The Construction Manager will schedule and coordinate the activities of the Contractor and other Multiple Prime Contractors in accordance with the latest approved Project schedule.

§ **4.2.5** The Construction Manager, except to the extent required by Section 4.2.4, and Architect will not have control over, or charge of, construction means, methods, techniques, sequences or procedures, or for the safety precautions and programs in connection with the Work, since these are solely the Contractor's rights and responsibilities under the Contract Documents, except as provided in Section 3.3.1, and neither will be responsible for the Contractor's failure to perform the Work in accordance with the requirements of the Contract Documents. Neither the Construction Manager nor the Architect will have control over or charge of or be responsible for acts or omissions of the Contractor, Subcontractors, or their agents or employees, or of any other persons or entities performing portions of the Work.

§ **4.2.6 Communications Facilitating Contract Administration.** Except as otherwise provided in the Contract Documents or when direct communications have been specially authorized, the Owner and Contractor shall endeavor to communicate with each other through the Construction Manager, and shall contemporaneously provide the same communications to the Architect about matters arising out of or relating to the Contract Documents. Communications by and with the Architect's consultants shall be through the Architect. Communications by and with Subcontractors and material suppliers shall be through the Contractor. Communications by and with other Multiple Prime Contractors shall be through the Construction Manager and shall be contemporaneously provided to the Architect if those communications are about matters arising out of or related to the Contract Documents. Communications by and with the Owner's own forces shall be through the Owner.

AIA Document A232™ – 2009(rev. 12/11) (formerly A201™CMa – 1992). Copyright © 1992 and 2009 by The American Institute of Architects. All rights reserved. WARNING: This AIA® Document is protected by U.S. Copyright Law and International Treaties. Unauthorized reproduction or distribution of this AIA® Document, or any portion of it, may result in severe civil and criminal penalties, and will be prosecuted to the maximum extent possible under the law. This document was produced by AIA software at 14:33:23 on 04/16/2015 under Order No.1697299329_1 which expires on 01/26/2016, and is not for resale.
User Notes:

§ **4.2.7** The Construction Manager and Architect will review and certify all Applications for Payment by the Contractor, in accordance with the provisions of Article 9.

§ **4.2.8** The Architect and Construction Manager have authority to reject Work that does not conform to the Contract Documents and will notify each other about the rejection. The Construction Manager shall determine in general whether the Work of the Contractor is being performed in accordance with the requirements of the Contract Documents and notify the Owner, Contractor and Architect of defects and deficiencies in the Work. Whenever the Construction Manager considers it necessary or advisable, the Construction Manager will have authority to require additional inspection or testing of the Work in accordance with Sections 13.5.2 and 13.5.3, upon written authorization of the Owner, whether or not such Work is fabricated, installed or completed. The foregoing authority of the Construction Manager will be subject to the provisions of Sections 4.2.18 through 4.2.20 inclusive, with respect to interpretations and decisions of the Architect. However, neither the Architect's nor the Construction Manager's authority to act under this Section 4.2.8 nor a decision made by either of them in good faith either to exercise or not to exercise such authority shall give rise to a duty or responsibility of the Architect or the Construction Manager to the Contractor, Subcontractors, material and equipment suppliers, their agents or employees, or other persons performing any of the Work.

§ **4.2.9** The Construction Manager will receive and promptly review for conformance with the submittal requirements of the Contract Documents, all submittals from the Contractor such as Shop Drawings, Product Data and Samples. Where there are Multiple Prime Contractors, the Construction Manager will also check and coordinate the information contained within each submittal received from Contractor and other Multiple Prime Contractors, and transmit to the Architect those recommended for approval. By submitting Shop Drawings, Product Data, Samples and similar submittals, the Construction Manager represents to the Owner and Architect that the Construction Manager has reviewed and recommended them for approval. The Construction Manager's actions will be taken in accordance with the Project submittal schedule approved by the Architect or, in the absence of an approved Project submittal schedule, with reasonable promptness while allowing sufficient time to permit adequate review by the Architect.

§ **4.2.10** The Architect will review and approve or take other appropriate action upon the Contractor's submittals such as Shop Drawings, Product Data and Samples, but only for the limited purpose of checking for conformance with information given and the design concept expressed in the Contract Documents. The Architect's action will be taken in accordance with the submittal schedule approved by the Architect or, in the absence of an approved submittal schedule, with reasonable promptness while allowing sufficient time in the Architect's professional judgment to permit adequate review. Upon the Architect's completed review, the Architect shall transmit its submittal review to the Construction Manager.

§ **4.2.11** Review of the Contractor's submittals by the Construction Manager and Architect is not conducted for the purpose of determining the accuracy and completeness of other details such as dimensions and quantities, or for substantiating instructions for installation or performance of equipment or systems, all of which remain the responsibility of the Contractor as required by the Contract Documents. The Construction Manager and Architect's review of the Contractor's submittals shall not relieve the Contractor of the obligations under Sections 3.3, 3.5 and 3.12. The Construction Manager and Architect's review shall not constitute approval of safety precautions or, unless otherwise specifically stated by the Construction Manager and Architect, of any construction means, methods, techniques, sequences or procedures. The Architect's approval of a specific item shall not indicate approval of an assembly of which the item is a component.

§ **4.2.12** The Construction Manager will prepare Change Orders and Construction Change Directives.

§ **4.2.13** The Construction Manager and the Architect will take appropriate action on Change Orders or Construction Change Directives in accordance with Article 7 and the Architect will have authority to order minor changes in the Work as provided in Section 7.4. The Architect, in consultation with the Construction Manager, will investigate and make determinations and recommendations regarding concealed and unknown conditions as provided in Section 3.7.4.

§ **4.2.14** Utilizing the documents provided by the Contractor, the Construction Manager will maintain at the site for the Owner one copy of all Contract Documents, approved Shop Drawings, Product Data, Samples and similar

AIA Document A232™ – 2009(rev. 12/11) (formerly A201™CMa – 1992). Copyright © 1992 and 2009 by The American Institute of Architects. All rights reserved. WARNING: This AIA® Document is protected by U.S. Copyright Law and International Treaties. Unauthorized reproduction or distribution of this AIA® Document, or any portion of it, may result in severe civil and criminal penalties, and will be prosecuted to the maximum extent possible under the law. This document was produced by AIA software at 14:33:23 on 04/16/2015 under Order No.1697299329_1 which expires on 01/26/2016, and is not for resale.
User Notes:

(1247311177)

required submittals, in good order and marked currently to record all changes and selections made during construction. These will be available to the Architect and the Contractor, and will be delivered to the Owner upon completion of the Project.

§ 4.2.15 The Construction Manager will assist the Architect in conducting inspections to determine the dates of Substantial Completion and the date of final completion; issue Certificates of Substantial Completion in conjunction with the Architect pursuant to Section 9.8; and receive and forward to the Owner written warranties and related documents required by the Contract and assembled by the Contractor pursuant to Section 9.10. The Construction Manager will forward to the Architect a final Application and Certificate for Payment or final Project Application and Project Certificate for Payment upon the Contractor's compliance with the requirements of the Contract Documents.

§ 4.2.16 If the Owner and Architect agree, the Architect will provide one or more project representatives to assist in carrying out the Architect's responsibilities at the site. The duties, responsibilities and limitations of authority of such project representatives shall be as set forth in an exhibit to be incorporated in the Contract Documents.

§ 4.2.17 The Architect will interpret and decide matters concerning performance under, and requirements of the Contract Documents on written request of the Construction Manager, Owner or Contractor through the Construction Manager. The Architect's response to such requests will be made in writing within any time limits agreed upon or otherwise with reasonable promptness.

§ 4.2.18 Interpretations and decisions of the Architect will be consistent with the intent of and reasonably inferable from the Contract Documents and will be in writing or in the form of drawings. When making such interpretations and decisions, the Architect will endeavor to secure faithful performance by both Owner and Contractor, will not show partiality to either and will not be liable for results of interpretations or decisions so rendered in good faith.

§ 4.2.19 The Architect's decisions on matters relating to aesthetic effect will be final if consistent with the intent expressed in the Contract Documents.

§ 4.2.20 The Construction Manager will receive and review requests for information from the Contractor, and forward each request for information to the Architect, with the Construction Manager's recommendation. The Architect will review and respond in writing to the Construction Manager to requests for information about the Contract Documents. The Construction Manager's recommendation and the Architect's response to each request will be made in writing within any time limits agreed upon or otherwise with reasonable promptness. If appropriate, the Architect will prepare and issue supplemental Drawings and Specifications in response to the requests for information.

ARTICLE 5 SUBCONTRACTORS

§ 5.1 Definitions

§ 5.1.1 A Subcontractor is a person or entity who has a direct contract with the Contractor to perform a portion of the Work at the site. The term "Subcontractor" is referred to throughout the Contract Documents as if singular in number and means a Subcontractor or an authorized representative of the Subcontractor. The term "Subcontractor" does not include other Multiple Prime Contractors or subcontractors of other Multiple Prime Contractors.

§ 5.1.2 A Sub-subcontractor is a person or entity who has a direct or indirect contract with a Subcontractor to perform a portion of the Work at the site. The term "Sub-subcontractor" is referred to throughout the Contract Documents as if singular in number and means a Sub-subcontractor or an authorized representative of the Sub-subcontractor.

§ 5.2 Award of Subcontracts and Other Contracts for Portions of the Work

§ 5.2.1 Unless otherwise stated in the Contract Documents or the bidding requirements, the Contractor, as soon as practicable after award of the Contract, shall furnish in writing to the Construction Manager for review by the Owner, Construction Manager and Architect the names of persons or entities (including those who are to furnish materials or equipment fabricated to a special design) proposed for each principal portion of the Work. The Construction Manager may reply within 14 days to the Contractor in writing stating (1) whether the Owner, the Construction Manager or the Architect has reasonable objection to any such proposed person or entity or, (2) that the

AIA Document A232™ – 2009(rev. 12/11) (formerly A201™CMa – 1992). Copyright © 1992 and 2009 by The American Institute of Architects. All rights reserved. WARNING: This AIA® Document is protected by U.S. Copyright Law and International Treaties. Unauthorized reproduction or distribution of this AIA® Document, or any portion of it, may result in severe civil and criminal penalties, and will be prosecuted to the maximum extent possible under the law. This document was produced by AIA software at 14:33:23 on 04/16/2015 under Order No.1697299329_1 which expires on 01/26/2016, and is not for resale.
User Notes:

Construction Manager, Architect or Owner requires additional time for review. Failure of the Construction Manager, Owner, or Architect to reply within the 14-day period shall constitute notice of no reasonable objection.

§ **5.2.2** The Contractor shall not contract with a proposed person or entity to whom the Owner, Construction Manager or Architect has made reasonable and timely objection. The Contractor shall not be required to contract with anyone to whom the Contractor has made reasonable objection.

§ **5.2.3** If the Owner, Construction Manager or Architect has reasonable objection to a person or entity proposed by the Contractor, the Contractor shall propose another to whom the Owner, Construction Manager or Architect has no reasonable objection. If the proposed but rejected Subcontractor was reasonably capable of performing the Work, the Contract Sum and Contract Time shall be increased or decreased by the difference, if any, occasioned by such change, and an appropriate Change Order shall be issued before commencement of the substitute Subcontractor's Work. However, no increase in the Contract Sum or Contract Time shall be allowed for such change unless the Contractor has acted promptly and responsively in submitting names as required.

§ **5.2.4** The Contractor shall not substitute a Subcontractor, person or entity previously selected if the Owner, Construction Manager or Architect makes reasonable objection to such substitution.

§ 5.3 Subcontractual Relations

By appropriate agreement, written where legally required for validity, the Contractor shall require each Subcontractor, to the extent of the Work to be performed by the Subcontractor, to be bound to the Contractor by terms of the Contract Documents, and to assume toward the Contractor all the obligations and responsibilities, including responsibility for safety of the Subcontractor's Work, which the Contractor, by these Documents, assumes toward the Owner, Construction Manager and Architect. Each subcontract agreement shall preserve and protect the rights of the Owner, Construction Manager and Architect under the Contract Documents with respect to the Work to be performed by the Subcontractor so that subcontracting thereof will not prejudice such rights, and shall allow to the Subcontractor, unless specifically provided otherwise in the subcontract agreement, the benefit of all rights, remedies and redress against the Contractor that the Contractor, by the Contract Documents, has against the Owner. Where appropriate, the Contractor shall require each Subcontractor to enter into similar agreements with Sub-subcontractors. The Contractor shall make available to each proposed Subcontractor, prior to the execution of the subcontract agreement, copies of the Contract Documents to which the Subcontractor will be bound, and, upon written request of the Subcontractor, identify to the Subcontractor terms and conditions of the proposed subcontract agreement that may be at variance with the Contract Documents. Subcontractors will similarly make copies of applicable portions of such documents available to their respective proposed Sub-subcontractors.

§ 5.4 Contingent Assignment of Subcontracts

§ **5.4.1** Each subcontract agreement for a portion of the Work is assigned by the Contractor to the Owner, provided that

- **.1** assignment is effective only after termination of the Contract by the Owner for cause pursuant to Section 14.2 and only for those subcontract agreements that the Owner accepts by notifying the Subcontractor and Contractor in writing; and
- **.2** assignment is subject to the prior rights of the surety, if any, obligated under bond relating to the Contract.

When the Owner accepts the assignment of a subcontract agreement, the Owner assumes the Contractor's rights and obligations under the subcontract.

§ **5.4.2** Upon such assignment, if the Work has been suspended for more than 30 days, the Subcontractor's compensation shall be equitably adjusted for increases in cost resulting from the suspension.

§ **5.4.3** Upon such assignment to the Owner under this Section 5.4, the Owner may further assign the subcontract to a successor Contractor or other entity. If the Owner assigns the subcontract to a successor Contractor or other entity, the Owner shall nevertheless remain legally responsible for all of the successor Contractor's obligations under the subcontract.

AIA Document A232™ – 2009(rev. 12/11) (formerly A201™CMa – 1992). Copyright © 1992 and 2009 by The American Institute of Architects. All rights reserved. WARNING: This AIA® Document is protected by U.S. Copyright Law and International Treaties. Unauthorized reproduction or distribution of this AIA® Document, or any portion of it, may result in severe civil and criminal penalties, and will be prosecuted to the maximum extent possible under the law. This document was produced by AIA software at 14:33:23 on 04/16/2015 under Order No.1697299329_1 which expires on 01/26/2016, and is not for resale.
User Notes:

(1247311177)

ARTICLE 6 CONSTRUCTION BY OWNER OR BY OTHER CONTRACTORS

§ 6.1 Owner's Right to Perform Construction with Own Forces and to Award Other Contracts

§ 6.1.1 The Owner reserves the right to perform construction or operations related to the Project with the Owner's own forces, which include persons or entities under separate contracts not administered by the Construction Manager, and to award other contracts in connection with other portions of the Project or other construction or operations on the site under Conditions of the Contract identical or substantially similar to these including those portions related to insurance and waiver of subrogation. If the Contractor claims that delay or additional cost is involved because of such action by the Owner, the Contractor shall make such Claim as provided in Article 15.

§ 6.1.2 When the Owner performs construction or operations with the Owner's own forces including persons or entities under separate contracts not administered by the Construction Manager, the Owner shall provide for coordination of such forces with the Work of the Contractor, who shall cooperate with them.

§ 6.1.3 Unless otherwise provided in the Contract Documents, when the Owner performs construction or operations related to the Project with the Owner's own forces, the Owner shall be deemed to be subject to the same obligations and to have the same rights that apply to the Contractor under the Conditions of the Contract, including, without excluding others, those stated in Article 3, this Article 6, and Articles 10, 11 and 12.

§ 6.2 Mutual Responsibility

§ 6.2.1 The Contractor shall afford the Owner's own forces, Construction Manager and other Multiple Prime Contractors reasonable opportunity for introduction and storage of their materials and equipment and performance of their activities, and shall connect and coordinate the Contractor's construction and operations with theirs as required by the Contract Documents.

§ 6.2.2 If part of the Contractor's Work depends for proper execution or results upon construction or operations by the Owner's own forces or other Multiple Prime Contractors, the Contractor shall, prior to proceeding with that portion of the Work, promptly report to the Construction Manager and Architect apparent discrepancies or defects in such other construction that would render it unsuitable for such proper execution and results. Failure of the Contractor so to report shall constitute an acknowledgment that the Owner's own forces or other Multiple Prime Contractors' completed or partially completed construction is fit and proper to receive the Contractor's Work, except as to defects not then reasonably discoverable.

§ 6.2.3 The Contractor shall reimburse the Owner for costs the Owner incurs, including costs that are payable to a separate contractor or to other Multiple Prime Contractors because of the Contractor's delays, improperly timed activities or defective construction. The Owner shall be responsible to the Contractor for costs the Contractor incurs because of delays, improperly timed activities, damage to the Work or defective construction by the Owner's own forces or other Multiple Prime Contractors.

§ 6.2.4 The Contractor shall promptly remedy damage the Contractor wrongfully causes to completed or partially completed construction or to property of the Owner, separate contractors, or other Multiple Prime Contractors as provided in Section 10.2.5.

§ 6.2.5 The Owner and other Multiple Prime Contractors shall have the same responsibilities for cutting and patching as are described for the Contractor in Section 3.14.

§ 6.3 Owner's Right to Clean Up

If a dispute arises among the Contractor, other Multiple Prime Contractors and the Owner as to the responsibility under their respective contracts for maintaining the premises and surrounding area free from waste materials and rubbish, the Owner may clean up and the Construction Manager, with notice to the Architect, will allocate the cost among those responsible.

ARTICLE 7 CHANGES IN THE WORK

§ 7.1 General

§ 7.1.1 Changes in the Work may be accomplished after execution of the Contract, and without invalidating the Contract, by Change Order, Construction Change Directive or order for a minor change in the Work, subject to the limitations stated in this Article 7 and elsewhere in the Contract Documents.

AIA Document A232™ – 2009(rev. 12/11) (formerly A201™CMa – 1992). Copyright © 1992 and 2009 by The American Institute of Architects. All rights reserved. WARNING: This AIA® Document is protected by U.S. Copyright Law and International Treaties. Unauthorized reproduction or distribution of this AIA® Document, or any portion of it, may result in severe civil and criminal penalties, and will be prosecuted to the maximum extent possible under the law. This document was produced by AIA software at 14:33:23 on 04/16/2015 under Order No.1697299329_1 which expires on 01/26/2016, and is not for resale.
User Notes:

§ 7.1.2 A Change Order shall be based upon agreement among the Owner, Construction Manager, Architect and Contractor; a Construction Change Directive requires agreement by the Owner, Construction Manager and Architect and may or may not be agreed to by the Contractor; an order for a minor change in the Work may be issued by the Architect alone.

§ 7.1.3 Changes in the Work shall be performed under applicable provisions of the Contract Documents, and the Contractor shall proceed promptly, unless otherwise provided in the Change Order, Construction Change Directive or order for a minor change in the Work.

§ 7.2 Change Orders

A Change Order is a written instrument prepared by the Construction Manager and signed by the Owner, Construction Manager, Architect and Contractor, stating their agreement upon all of the following:

.1 The change in the Work;
.2 The amount of the adjustment, if any, in the Contract Sum; and
.3 The extent of the adjustment, if any, in the Contract Time.

§ 7.3 Construction Change Directives

§ 7.3.1 A Construction Change Directive is a written order prepared by the Construction Manager and signed by the Owner, Construction Manager and Architect, directing a change in the Work prior to agreement on adjustment, if any, in the Contract Sum or Contract Time, or both. The Owner may by Construction Change Directive, without invalidating the Contract, order changes in the Work within the general scope of the Contract consisting of additions, deletions or other revisions, the Contract Sum and Contract Time being adjusted accordingly.

§ 7.3.2 A Construction Change Directive shall be used in the absence of total agreement on the terms of a Change Order.

§ 7.3.3 If the Construction Change Directive provides for an adjustment to the Contract Sum, the adjustment shall be based on one of the following methods:

.1 Mutual acceptance of a lump sum properly itemized and supported by sufficient substantiating data to permit evaluation;
.2 Unit prices stated in the Contract Documents or subsequently agreed upon;
.3 Cost to be determined in a manner agreed upon by the parties and a mutually acceptable fixed or percentage fee; or
.4 As provided in Section 7.3.7.

§ 7.3.4 If unit prices are stated in the Contract Documents or subsequently agreed upon, and if quantities originally contemplated are materially changed in a proposed Change Order or Construction Change Directive so that application of such unit prices to quantities of Work proposed will cause substantial inequity to the Owner or Contractor, the applicable unit prices shall be equitably adjusted.

§ 7.3.5 Upon receipt of a Construction Change Directive, the Contractor shall promptly proceed with the change in the Work involved and advise the Construction Manager and Architect of the Contractor's agreement or disagreement with the method, if any, provided in the Construction Change Directive for determining the proposed adjustment in the Contract Sum or Contract Time.

§ 7.3.6 A Construction Change Directive signed by the Contractor indicates the Contractor's agreement therewith, including adjustment in Contract Sum and Contract Time or the method for determining them. Such agreement shall be effective immediately and shall be recorded as a Change Order.

§ 7.3.7 If the Contractor does not respond promptly or disagrees with the method for adjustment in the Contract Sum, the Construction Manager shall determine the method and the adjustment on the basis of reasonable expenditures and savings of those performing the Work attributable to the change, including, in case of an increase in the Contract Sum, an amount for overhead and profit as set forth in the Agreement, or if no such amount is set forth in the Agreement, a reasonable amount. In such case, and also under Section 7.3.3.3, the Contractor shall keep and present, in such form as the Construction Manager may prescribe, an itemized accounting together with appropriate supporting data. Unless otherwise provided in the Contract Documents, costs for the purposes of this Section 7.3.7 shall be limited to the following:

AIA Document A232™ – 2009(rev. 12/11) (formerly A201™CMa – 1992). Copyright © 1992 and 2009 by The American Institute of Architects. All rights reserved. WARNING: This AIA® Document is protected by U.S. Copyright Law and International Treaties. Unauthorized reproduction or distribution of this AIA® Document, or any portion of it, may result in severe civil and criminal penalties, and will be prosecuted to the maximum extent possible under the law. This document was produced by AIA software at 14:33:23 on 04/16/2015 under Order No.1697299329_1 which expires on 01/26/2016, and is not for resale.
User Notes:

(1247311177)

.1 Costs of labor, including social security, old age and unemployment insurance, fringe benefits required by agreement or custom, and workers compensation insurance;
.2 Costs of materials, supplies and equipment, including cost of transportation, whether incorporated or consumed;
.3 Rental costs of machinery and equipment, exclusive of hand tools, whether rented from the Contractor or others;
.4 Costs of premiums for all bonds and insurance, permit fees, and sales, use or similar taxes related to the Work; and
.5 Additional costs of supervision and field office personnel directly attributable to the change.

§ 7.3.8 The amount of credit to be allowed by the Contractor to the Owner for a deletion or change that results in a net decrease in the Contract Sum shall be actual net cost as confirmed by the Construction Manager and Architect. When both additions and credits covering related Work or substitutions are involved in a change, the allowance for overhead and profit shall be figured on the basis of net increase, if any, with respect to that change.

§ 7.3.9 Pending final determination of the total cost of a Construction Change Directive to the Owner, the Contractor may request payment for Work completed under the Construction Change Directive in Applications for Payment. The Construction Manager and Architect will make an interim determination for purposes of monthly certification for payment for those costs and certify for payment the amount that the Construction Manager and Architect determine to be reasonably justified. The interim determination of cost shall adjust the Contract Sum on the same basis as a Change Order, subject to the right of either party to disagree and assert a Claim in accordance with Article 15.

§ 7.3.10 When the Owner and Contractor agree with a determination made by the Construction Manager and Architect concerning the adjustments in the Contract Sum and Contract Time, or otherwise reach agreement upon the adjustments, such agreement shall be effective immediately and the Construction Manager shall prepare a Change Order. Change Orders may be issued for all or any part of a Construction Change Directive.

§ 7.4 Minor Changes in the Work
The Architect has authority to order minor changes in the Work not involving adjustment in the Contract Sum or extension of the Contract Time and not inconsistent with the intent of the Contract Documents. Such changes will be effected by written order issued through the Construction Manager and shall be binding on the Owner and Contractor.

ARTICLE 8 TIME
§ 8.1 Definitions
§ 8.1.1 Unless otherwise provided, Contract Time is the period of time, including authorized adjustments, allotted in the Contract Documents for Substantial Completion of the Work.

§ 8.1.2 The date of commencement of the Work is the date established in the Agreement.

§ 8.1.3 The date of Substantial Completion is the date certified by the Architect in accordance with Section 9.8.

§ 8.1.4 The term "day" as used in the Contract Documents shall mean calendar day unless otherwise specifically defined.

§ 8.2 Progress and Completion
§ 8.2.1 Time limits stated in the Contract Documents are of the essence of the Contract. By executing the Agreement the Contractor confirms that the Contract Time is a reasonable period for performing the Work.

§ 8.2.2 The Contractor shall not knowingly, except by agreement or instruction of the Owner in writing, prematurely commence operations on the site or elsewhere prior to the effective date of insurance required by Article 11 to be furnished by the Contractor and Owner. The date of commencement of the Work shall not be changed by the effective date of such insurance.

§ 8.2.3 The Contractor shall proceed expeditiously with adequate forces and shall achieve Substantial Completion within the Contract Time.

Init.
/
AIA Document A232™ – 2009(rev. 12/11) (formerly A201™CMa – 1992). Copyright © 1992 and 2009 by The American Institute of Architects. All rights reserved. WARNING: This AIA® Document is protected by U.S. Copyright Law and International Treaties. Unauthorized reproduction or distribution of this AIA® Document, or any portion of it, may result in severe civil and criminal penalties, and will be prosecuted to the maximum extent possible under the law. This document was produced by AIA software at 14:33:23 on 04/16/2015 under Order No.1697299329_1 which expires on 01/26/2016, and is not for resale.
User Notes:

(1247311177)

§ 8.3 Delays and Extensions of Time

§ 8.3.1 If the Contractor is delayed at any time in the commencement or progress of the Work by an act or neglect of the Owner, Owner's own forces, Construction Manager, Architect, any of the other Multiple Prime Contractors or an employee of any of them, or by changes ordered in the Work, or by labor disputes, fire, unusual delay in deliveries, unavoidable casualties or other causes beyond the Contractor's control; or by delay authorized by the Owner pending mediation and arbitration, or by other causes that the Architect, based on the recommendation of the Construction Manager, determines may justify delay, then the Contract Time shall be extended by Change Order for such reasonable time as the Architect may determine.

§ 8.3.2 Claims relating to time shall be made in accordance with applicable provisions of Article 15.

§ 8.3.3 This Section 8.3 does not preclude recovery of damages for delay by either party under other provisions of the Contract Documents.

ARTICLE 9 PAYMENTS AND COMPLETION

§ 9.1 Contract Sum

The Contract Sum is stated in the Agreement and, including authorized adjustments, is the total amount payable by the Owner to the Contractor for performance of the Work under the Contract Documents.

§ 9.2 Schedule of Values

Where the Contract is based on a Stipulated Sum or Guaranteed Maximum Price, the Contractor shall submit to the Construction Manager, before the first Application for Payment, a schedule of values allocating the entire Contract Sum to the various portions of the Work and prepared in such form and supported by such data to substantiate its accuracy as the Construction Manager and Architect may require. This schedule, unless objected to by the Construction Manager or Architect, shall be used as a basis for reviewing the Contractor's Applications for Payment. In the event there is one Contractor, the Construction Manager shall forward to the Architect the Contractor's schedule of values. If there are Multiple Prime Contractors responsible for performing different portions of the Project, the Construction Manager shall forward the Multiple Prime Contractors' schedules of values only if requested by the Architect.

§ 9.3 Applications for Payment

§ 9.3.1 At least fifteen days before the date established for each progress payment, the Contractor shall submit to the Construction Manager an itemized Application for Payment prepared in accordance with the schedule of values, if required under Section 9.2, for completed portions of the Work. Such application shall be notarized, if required, and supported by such data substantiating the Contractor's right to payment as the Owner, Construction Manager or Architect may require, such as copies of requisitions from Subcontractors and material suppliers, and shall reflect retainage if provided for in the Contract Documents.

§ 9.3.1.1 As provided in Section 7.3.9, such applications may include requests for payment on account of changes in the Work that have been properly authorized by Construction Change Directives, or by interim determinations of the Construction Manager and Architect, but not yet included in Change Orders.

§ 9.3.1.2 Applications for Payment shall not include requests for payment for portions of the Work for which the Contractor does not intend to pay a Subcontractor or material supplier unless such Work has been performed by others whom the Contractor intends to pay.

§ 9.3.2 Unless otherwise provided in the Contract Documents, payments shall be made on account of materials and equipment delivered and suitably stored at the site for subsequent incorporation in the Work. If approved in advance by the Owner, payment may similarly be made for materials and equipment suitably stored off the site at a location agreed upon in writing. Payment for materials and equipment stored on or off the site shall be conditioned upon compliance by the Contractor with procedures satisfactory to the Owner to establish the Owner's title to such materials and equipment or otherwise protect the Owner's interest, and shall include the costs of applicable insurance, storage and transportation to the site for such materials and equipment stored off the site.

§ 9.3.3 The Contractor warrants that title to all Work covered by an Application for Payment will pass to the Owner no later than the time of payment. The Contractor further warrants that upon submittal of an Application for

AIA Document A232™ – 2009(rev. 12/11) (formerly A201™CMa – 1992). Copyright © 1992 and 2009 by The American Institute of Architects. All rights reserved. WARNING: This AIA® Document is protected by U.S. Copyright Law and International Treaties. Unauthorized reproduction or distribution of this AIA® Document, or any portion of it, may result in severe civil and criminal penalties, and will be prosecuted to the maximum extent possible under the law. This document was produced by AIA software at 14:33:23 on 04/16/2015 under Order No.1697299329_1 which expires on 01/26/2016, and is not for resale.
User Notes:

(1247311177)

Payment all Work for which Certificates for Payment have been previously issued and payments received from the Owner shall, to the best of the Contractor's knowledge, information and belief, be free and clear of liens, claims, security interests or encumbrances in favor of the Contractor, Subcontractors, material suppliers, or other persons or entities making a claim by reason of having provided labor, materials and equipment relating to the Work.

§ 9.4 Certificates for Payment

§ 9.4.1 Where there is only one Contractor, the Construction Manager will, within seven days after the Construction Manager's receipt of the Contractor's Application for Payment, review the Application, certify the amount the Construction Manager determines is due the Contractor, and forward the Contractor's Application and Certificate for Payment to the Architect. Within seven days after the Architect receives the Contractor's Application for Payment from the Construction Manager, the Architect will either issue to the Owner a Certificate for Payment, with a copy to the Construction Manager, for such amount as the Architect determines is properly due, or notify the Construction Manager and Owner in writing of the Architect's reasons for withholding certification in whole or in part as provided in Section 9.5.1. The Construction Manager will promptly forward to the Contractor the Architect's notice of withholding certification.

§ 9.4.2 Where there are Multiple Prime Contractors performing portions of the Project, the Construction Manager will, within seven days after the Construction Manager receives the Multiple Prime Contractors' Applications for Payment: (1) review the Applications and certify the amount the Construction Manager determines is due each of the Multiple Prime Contractors; (2) prepare a Summary of Contractors' Applications for Payment by combining information from each Multiple Prime Contractors' application with information from similar applications for progress payments from other Multiple Prime Contractors; (3) prepare a Project Application and Certificate for Payment; (4) certify the amount the Construction Manager determines is due all Multiple Prime Contractors; and (5) forward the Summary of Contractors' Applications for Payment and Project Application and Certificate for Payment to the Architect.

§ 9.4.3 Within seven days after the Architect receives the Project Application and Project Certificate for Payment and the Summary of Contractors' Applications for Payment from the Construction Manager, the Architect will either issue to the Owner a Project Certificate for Payment, with a copy to the Construction Manager, for such amount as the Architect determines is properly due, or notify the Construction Manager and Owner in writing of the Architect's reasons for withholding certification in whole or in part as provided in Section 9.5.1. The Construction Manager will promptly forward the Architect's notice of withholding certification to the Contractors.

§ 9.4.4 The Construction Manager's certification of an Application for Payment or, in the case of Multiple Prime Contractors, a Project Application and Certificate for Payment shall be based upon the Construction Manager's evaluation of the Work and the information provided as part of the Application for Payment. The Construction Manager's certification will constitute a representation that, to the best of the Construction Manager's knowledge, information and belief, the Work has progressed to the point indicated and the quality of the Work is in accordance with the Contract Documents. The certification will also constitute a recommendation to the Architect and Owner that the Contractor be paid the amount certified.

§ 9.4.5 The Architect's issuance of a Certificate for Payment or in the case of Multiple Prime Contractors, Project Application and Certificate for Payment, shall be based upon the Architect's evaluation of the Work, the recommendation of the Construction Manager, and information provided as part of the Application for Payment or Project Application for Payment. The Architect's certification will constitute a representation that, to the best of the Architect's knowledge, information and belief, the Work has progressed to the point indicated, that the quality of the Work is in accordance with the Contract Documents, and that the Contractor is entitled to payment in the amount certified.

§ 9.4.6 The representations made pursuant to Sections 9.4.4 and 9.4.5 are subject to an evaluation of the Work for conformance with the Contract Documents upon Substantial Completion, to results of subsequent tests and inspections, to correction of minor deviations from the Contract Documents prior to completion and to specific qualifications expressed by the Construction Manager or Architect.

§ 9.4.7 The issuance of a separate Certificate for Payment or a Project Certificate for Payment will not be a representation that the Construction Manager or Architect has (1) made exhaustive or continuous on-site inspections to check the quality or quantity of the Work, (2) reviewed the Contractor's construction means, methods, techniques,

AIA Document A232™ – 2009(rev. 12/11) (formerly A201™CMa – 1992). Copyright © 1992 and 2009 by The American Institute of Architects. All rights reserved. WARNING: This AIA® Document is protected by U.S. Copyright Law and International Treaties. Unauthorized reproduction or distribution of this AIA® Document, or any portion of it, may result in severe civil and criminal penalties, and will be prosecuted to the maximum extent possible under the law. This document was produced by AIA software at 14:33:23 on 04/16/2015 under Order No.1697299329_1 which expires on 01/26/2016, and is not for resale.
User Notes:

sequences or procedures, (3) reviewed copies of requisitions received from Subcontractors and material suppliers and other data requested by the Owner to substantiate the Contractor's right to payment or (4) made examination to ascertain how or for what purpose the Contractor has used money previously paid on account of the Contract Sum.

§ 9.5 Decisions to Withhold Certification

§ 9.5.1 The Construction Manager or Architect may withhold a Certificate for Payment or Project Certificate for Payment in whole or in part, to the extent reasonably necessary to protect the Owner, if in the Construction Manager's or Architect's opinion the representations to the Owner required by Section 9.4.4 and 9.4.5 cannot be made. If the Construction Manager or Architect is unable to certify payment in the amount of the Application, the Construction Manager will notify the Contractor and Owner as provided in Section 9.4.1 and 9.4.3. If the Contractor, Construction Manager and Architect cannot agree on a revised amount, the Architect will promptly issue a Certificate for Payment or a Project Certificate for Payment for the amount for which the Architect is able to make such representations to the Owner. The Construction Manager or Architect may also withhold a Certificate for Payment or, because of subsequently discovered evidence or subsequent observations, may nullify the whole or a part of a Certificate for Payment or Project Certificate for Payment previously issued, to such extent as may be necessary in the Construction Manager's or Architect's opinion to protect the Owner from loss for which the Contractor is responsible, including loss resulting from the acts and omissions described in Section 3.3.2 because of

- .1 defective Work not remedied;
- .2 third party claims filed or reasonable evidence indicating probable filing of such claims unless security acceptable to the Owner is provided by the Contractor;
- .3 failure of the Contractor to make payments properly to Subcontractors or for labor, materials or equipment;
- .4 reasonable evidence that the Work cannot be completed for the unpaid balance of the Contract Sum;
- .5 damage to the Owner or a separate contractor;
- .6 reasonable evidence that the Work will not be completed within the Contract Time, and that the unpaid balance would not be adequate to cover actual or liquidated damages for the anticipated delay; or
- .7 repeated failure to carry out the Work in accordance with the Contract Documents.

§ 9.5.2 When the above reasons for withholding certification are removed, certification will be made for amounts previously withheld.

§ 9.5.3 If the Architect or Construction Manager withholds certification for payment under Section 9.5.1, the Owner may, at its sole option, issue joint checks to the Contractor and to any Subcontractor or material or equipment suppliers to whom the Contractor failed to make payment for Work properly performed or material or equipment suitably delivered. If the Owner makes payments by joint check, the Owner shall notify the Architect and the Construction Manager and both will reflect such payment on the next Certificate for Payment.

§ 9.6 Progress Payments

§ 9.6.1 After the Architect has issued a Certificate for Payment or Project Certificate for Payment, the Owner shall make payment in the manner and within the time provided in the Contract Documents, and shall so notify the Construction Manager and Architect.

§ 9.6.2 The Contractor shall pay each Subcontractor, no later than seven days after receipt of payment from the Owner the amount to which the Subcontractor is entitled, reflecting percentages actually retained from payments to the Contractor on account of the Subcontractor's portion of the Work. The Contractor shall, by appropriate agreement with each Subcontractor, require each Subcontractor to make payments to Sub-subcontractors in a similar manner.

§ 9.6.3 The Construction Manager will, on request, furnish to a Subcontractor, if practicable, information regarding percentages of completion or amounts applied for by the Contractor and action taken thereon by the Owner, Construction Manager and Architect on account of portions of the Work done by such Subcontractor.

§ 9.6.4 The Owner has the right to request written evidence from the Contractor that the Contractor has properly paid Subcontractors and material and equipment suppliers amounts paid by the Owner to the Contractor for subcontracted Work. If the Contractor fails to furnish such evidence within seven days, the Owner shall have the right to contact Subcontractors to ascertain whether they have been properly paid. Neither the Owner, Construction

Init.
/

AIA Document A232™ – 2009(rev. 12/11) (formerly A201™CMa – 1992). Copyright © 1992 and 2009 by The American Institute of Architects. All rights reserved. WARNING: This AIA® Document is protected by U.S. Copyright Law and International Treaties. Unauthorized reproduction or distribution of this AIA® Document, or any portion of it, may result in severe civil and criminal penalties, and will be prosecuted to the maximum extent possible under the law. This document was produced by AIA software at 14:33:23 on 04/16/2015 under Order No.1697299329_1 which expires on 01/26/2016, and is not for resale.
User Notes:

(1247311177)

Manager nor Architect shall have an obligation to pay or to see to the payment of money to a Subcontractor except as may otherwise be required by law.

§ 9.6.5 Contractor payments to material and equipment suppliers shall be treated in a manner similar to that provided in Sections 9.6.2, 9.6.3 and 9.6.4.

§ 9.6.6 A Certificate for Payment, a progress payment, or partial or entire use or occupancy of the Project by the Owner shall not constitute acceptance of Work not in accordance with the Contract Documents.

§ 9.6.7 Unless the Contractor provides the Owner with a payment bond in the full penal sum of the Contract Sum, payments received by the Contractor for Work properly performed by Subcontractors and suppliers shall be held by the Contractor for those Subcontractors or suppliers who performed Work or furnished materials, or both, under contract with the Contractor for which payment was made by the Owner. Nothing contained herein shall require money to be placed in a separate account and not commingled with money of the Contractor, shall create any fiduciary liability or tort liability on the part of the Contractor for breach of trust or shall entitle any person or entity to an award of punitive damages against the Contractor for breach of the requirements of this provision.

§ 9.7 Failure of Payment

If the Construction Manager and Architect do not issue a Certificate for Payment or a Project Certificate for Payment, through no fault of the Contractor, within fourteen days after the Construction Manager's receipt of the Contractor's Application for Payment, or if the Owner does not pay the Contractor within seven days after the date established in the Contract Documents the amount certified by the Construction Manager and Architect or awarded by binding dispute resolution, then the Contractor may, upon seven additional days' written notice to the Owner, Construction Manager and Architect, stop the Work until payment of the amount owing has been received. The Contract Time shall be extended appropriately and the Contract Sum shall be increased by the amount of the Contractor's reasonable costs of shut-down, delay and start-up, plus interest as provided for in the Contract Documents.

§ 9.8 Substantial Completion

§ 9.8.1 Substantial Completion is the stage in the progress of the Work when the Work or designated portion thereof is sufficiently complete in accordance with the Contract Documents so the Owner can occupy or utilize the Work for its intended use.

§ 9.8.2 When the Contractor considers that the Work, or a portion thereof which the Owner agrees to accept separately, is substantially complete, the Contractor shall notify the Construction Manager, and the Contractor and Construction Manager shall jointly prepare and submit to the Architect a comprehensive list of items to be completed or corrected prior to final payment. Failure to include an item on such list does not alter the responsibility of the Contractor to complete all Work in accordance with the Contract Documents.

§ 9.8.3 Upon receipt of the list, the Architect, assisted by the Construction Manager, will make an inspection to determine whether the Work or designated portion thereof is substantially complete. If the Architect's inspection discloses any item, whether or not included on the list, which is not sufficiently complete in accordance with the requirements of the Contract Documents so that the Owner can occupy or utilize the Work or designated portion thereof for its intended use, the Contractor shall, before issuance of the Certificate of Substantial Completion, complete or correct such item upon notification by the Architect. In such case, the Contractor shall then submit a request for another inspection by the Architect, assisted by the Construction Manager, to determine Substantial Completion.

§ 9.8.4 When the Architect, assisted by the Construction Manager, determines that the Work or designated portion thereof is substantially complete, the Construction Manager will prepare, and the Construction Manager and Architect shall execute a Certificate of Substantial Completion that shall establish the date of Substantial Completion, shall establish responsibilities of the Owner and Contractor for security, maintenance, heat, utilities, damage to the Work and insurance, and shall fix the time within which the Contractor shall finish all items on the list accompanying the Certificate. Warranties required by the Contract Documents shall commence on the date of Substantial Completion of the Work or designated portion thereof unless otherwise provided in the Certificate of Substantial Completion.

AIA Document A232™ – 2009(rev. 12/11) (formerly A201™CMa – 1992). Copyright © 1992 and 2009 by The American Institute of Architects. **All rights reserved. WARNING: This AIA® Document is protected by U.S. Copyright Law and International Treaties. Unauthorized reproduction or distribution of this AIA® Document, or any portion of it, may result in severe civil and criminal penalties, and will be prosecuted to the maximum extent possible under the law.** This document was produced by AIA software at 14:33:23 on 04/16/2015 under Order No.1697299329_1 which expires on 01/26/2016, and is not for resale.
User Notes:

§ **9.8.5** The Certificate of Substantial Completion shall be submitted to the Owner and Contractor for their written acceptance of responsibilities assigned to them in such Certificate. Upon such acceptance and consent of surety, if any, the Owner shall make payment of retainage applying to such Work or designated portion thereof. Such payment shall be adjusted for Work that is incomplete or not in accordance with the requirements of the Contract Documents.

§ 9.9 Partial Occupancy or Use

§ **9.9.1** The Owner may occupy or use any completed or partially completed portion of the Work at any stage when such portion is designated by separate agreement with the Contractor, provided such occupancy or use is consented to by the insurer as required under Section 11.3.1.5 and authorized by public authorities having jurisdiction over the Project. Such partial occupancy or use may commence whether or not the portion is substantially complete, provided the Owner and Contractor have accepted in writing the responsibilities assigned to each of them for payments, retainage if any, security, maintenance, heat, utilities, damage to the Work and insurance, and have agreed in writing concerning the period for correction of the Work and commencement of warranties required by the Contract Documents. When the Contractor considers a portion substantially complete, the Contractor and Construction Manager shall jointly prepare and submit a list to the Architect as provided under Section 9.8.2. Consent of the Contractor to partial occupancy or use shall not be unreasonably withheld. The stage of the progress of the Work shall be determined by written agreement between the Owner and Contractor or, if no agreement is reached, by decision of the Architect after consultation with the Construction Manager.

§ **9.9.2** Immediately prior to such partial occupancy or use, the Owner, Construction Manager, Contractor and Architect shall jointly inspect the area to be occupied or portion of the Work to be used in order to determine and record the condition of the Work.

§ **9.9.3** Unless otherwise agreed upon, partial occupancy or use of a portion or portions of the Work shall not constitute acceptance of Work not complying with the requirements of the Contract Documents.

§ 9.10 Final Completion and Final Payment

§ **9.10.1** Upon completion of the Work, the Contractor shall forward to the Construction Manager a written notice that the Work is ready for final inspection and acceptance and shall also forward to the Construction Manager a final Contractor's Application for Payment. Upon receipt, the Construction Manager will evaluate the completion of Work of the Contractor and then forward the notice and Application, with the Construction Manager's recommendations, to the Architect who will promptly make such inspection. When the Architect, finds the Work acceptable under the Contract Documents and the Contract fully performed, the Construction Manager and Architect will promptly issue a final Certificate for Payment or Project Certificate for Payment stating that to the best of their knowledge, information and belief, and on the basis of their on-site visits and inspections, the Work has been completed in accordance with terms and conditions of the Contract Documents and that the entire balance found to be due the Contractor and noted in the final Certificate is due and payable. The Construction Manager's and Architect's final Certificate for Payment or Project Certificate for Payment will constitute a further representation that conditions listed in Section 9.10.2 as precedent to the Contractor's being entitled to final payment have been fulfilled.

§ **9.10.2** Neither final payment nor any remaining retained percentage shall become due until the Contractor submits to the Architect through the Construction Manager (1) an affidavit that payrolls, bills for materials and equipment, and other indebtedness connected with the Work for which the Owner or the Owner's property might be responsible or encumbered (less amounts withheld by Owner) have been paid or otherwise satisfied, (2) a certificate evidencing that insurance required by the Contract Documents to remain in force after final payment is currently in effect and will not be canceled or allowed to expire until at least 30 days' prior written notice has been given to the Owner, (3) a written statement that the Contractor knows of no substantial reason that the insurance will not be renewable to cover the period required by the Contract Documents, (4) consent of surety, if any, to final payment and (5), if required by the Owner, other data establishing payment or satisfaction of obligations, such as receipts, releases and waivers of liens, claims, security interests or encumbrances arising out of the Contract, to the extent and in such form as may be designated by the Owner. If a Subcontractor refuses to furnish a release or waiver required by the Owner, the Contractor may furnish a bond satisfactory to the Owner to indemnify the Owner against such lien. If such lien remains unsatisfied after payments are made, the Contractor shall refund to the Owner all money that the Owner may be compelled to pay in discharging such lien, including all costs and reasonable attorneys' fees.

AIA Document A232™ – 2009(rev. 12/11) (formerly A201™CMa – 1992). Copyright © 1992 and 2009 by The American Institute of Architects. **All rights reserved. WARNING: This AIA® Document is protected by U.S. Copyright Law and International Treaties. Unauthorized reproduction or distribution of this AIA® Document, or any portion of it, may result in severe civil and criminal penalties, and will be prosecuted to the maximum extent possible under the law.** This document was produced by AIA software at 14:33:23 on 04/16/2015 under Order No.1697299329_1 which expires on 01/26/2016, and is not for resale.
User Notes:

§ 9.10.3 If, after Substantial Completion of the Work, final completion thereof is materially delayed through no fault of the Contractor or by issuance of Change Orders affecting final completion, and the Construction Manager and Architect so confirm, the Owner shall, upon application by the Contractor and certification by the Construction Manager and Architect, and without terminating the Contract, make payment of the balance due for that portion of the Work fully completed and accepted. If the remaining balance for Work not fully completed or corrected is less than retainage stipulated in the Contract Documents, and if bonds have been furnished, the written consent of surety to payment of the balance due for that portion of the Work fully completed and accepted shall be submitted by the Contractor to the Architect through the Construction Manager prior to certification of such payment. Such payment shall be made under terms and conditions governing final payment, except that it shall not constitute a waiver of Claims.

§ 9.10.4 The making of final payment shall constitute a waiver of Claims by the Owner except those arising from

- .1 liens, Claims, security interests or encumbrances arising out of the Contract and unsettled;
- .2 failure of the Work to comply with the requirements of the Contract Documents; or
- .3 terms of special warranties required by the Contract Documents.

§ 9.10.5 Acceptance of final payment by the Contractor, a Subcontractor or material supplier shall constitute a waiver of claims by that payee except those previously made in writing and identified by that payee as unsettled at the time of final Application for Payment.

ARTICLE 10 PROTECTION OF PERSONS AND PROPERTY

§ 10.1 Safety Precautions and Programs

The Contractor shall be responsible for initiating, maintaining and supervising all safety precautions and programs in connection with the performance of the Contract. The Contractor shall submit the Contractor's safety program to the Construction Manager for review and coordination with the safety programs of other Contractors. The Construction Manager's responsibilities for review and coordination of safety programs shall not extend to direct control over or charge of the acts or omissions of the Contractors, Subcontractors, agents or employees of the Contractors or Subcontractors, or any other persons performing portions of the Work and not directly employed by the Construction Manager.

§ 10.2 Safety of Persons and Property

§ 10.2.1 The Contractor shall take reasonable precautions for safety of, and shall provide reasonable protection to prevent damage, injury or loss to

- .1 employees on the Work and other persons who may be affected thereby;
- .2 the Work and materials and equipment to be incorporated therein, whether in storage on or off the site, under care, custody or control of the Contractor or the Contractor's Subcontractors or Sub-subcontractors;
- .3 other property at the site or adjacent thereto, such as trees, shrubs, lawns, walks, pavements, roadways, structures and utilities not designated for removal, relocation or replacement in the course of construction; and
- .4 construction or operations by the Owner or other Contractors.

§ 10.2.2 The Contractor shall comply with and give notices required by applicable laws, statutes, ordinances, codes, rules and regulations and lawful orders of public authorities bearing on safety of persons or property or their protection from damage, injury or loss.

§ 10.2.3 The Contractor shall erect and maintain, as required by existing conditions and performance of the Contract, reasonable safeguards for safety and protection, including posting danger signs and other warnings against hazards, promulgating safety regulations and notifying owners and users of adjacent sites and utilities.

§ 10.2.4 When use or storage of explosives or other hazardous materials or equipment or unusual methods are necessary for execution of the Work, the Contractor shall exercise utmost care and carry on such activities under supervision of properly qualified personnel.

§ 10.2.5 The Contractor shall promptly remedy damage and loss (other than damage or loss insured under property insurance required by the Contract Documents) to property referred to in Sections 10.2.1.2, 10.2.1.3 and 10.2.1.4 caused in whole or in part by the Contractor, a Subcontractor, a Sub-subcontractor, or anyone directly or indirectly

AIA Document A232™ – 2009(rev. 12/11) (formerly A201™CMa – 1992). Copyright © 1992 and 2009 by The American Institute of Architects. All rights reserved. WARNING: This AIA® Document is protected by U.S. Copyright Law and International Treaties. Unauthorized reproduction or distribution of this AIA® Document, or any portion of it, may result in severe civil and criminal penalties, and will be prosecuted to the maximum extent possible under the law. This document was produced by AIA software at 14:33:23 on 04/16/2015 under Order No.1697299329_1 which expires on 01/26/2016, and is not for resale.
User Notes:

(1247311177)

employed by any of them, or by anyone for whose acts they may be liable and for which the Contractor is responsible under Sections 10.2.1.2, 10.2.1.3 and 10.2.1.4, except damage or loss attributable to acts or omissions of the Owner, Construction Manager or Architect or anyone directly or indirectly employed by any of them, or by anyone for whose acts any of them may be liable, and not attributable to the fault or negligence of the Contractor. The foregoing obligations of the Contractor are in addition to the Contractor's obligations under Section 3.18.

§ 10.2.6 The Contractor shall designate a responsible member of the Contractor's organization at the site whose duty shall be the prevention of accidents. This person shall be the Contractor's superintendent unless otherwise designated by the Contractor in writing to the Owner, Construction Manager and Architect.

§ 10.2.7 The Contractor shall not permit any part of the construction or site to be loaded so as to cause damage or create an unsafe condition.

§ 10.2.8 Injury or Damage to Person or Property
If either party suffers injury or damage to person or property because of an act or omission of the other party, or of others for whose acts such party is legally responsible, written notice of such injury or damage, whether or not insured, shall be given to the other party within a reasonable time not exceeding 21 days after discovery. The notice shall provide sufficient detail to enable the other party to investigate the matter.

§ 10.3 Hazardous Materials
§ 10.3.1 The Contractor is responsible for compliance with any requirements included in the Contract Documents regarding hazardous materials. If the Contractor encounters a hazardous material or substance not addressed in the Contract Documents and if reasonable precautions will be inadequate to prevent foreseeable bodily injury or death to persons resulting from a material or substance, including but not limited to, asbestos or polychlorinated biphenyl (PCB),encountered on the site by the Contractor, the Contractor shall, upon recognizing the condition, immediately stop Work in the affected area and report the condition to the Owner, Construction Manager and Architect in writing.

§ 10.3.2 Upon receipt of the Contractor's written notice, the Owner shall obtain the services of a licensed laboratory to verify a presence or absence of the material or substance reported by the Contractor and, in the event such material or substance is found to be present, to cause it to be rendered harmless. Unless otherwise required by the Contract Documents, the Owner shall furnish in writing to the Contractor, Construction Manager and Architect the names and qualifications of persons or entities who are to perform tests verifying the presence or absence of such material or substance or who are to perform the task of removal or safe containment of such material or substance. The Contractor, the Construction Manager and the Architect will promptly reply to the Owner in writing stating whether or not any of them has reasonable objection to the persons or entities proposed by the Owner. If the Contractor, Construction Manager or Architect has an objection to a person or entity proposed by the Owner, the Owner shall propose another to whom the Contractor, the Construction Manager and the Architect have no reasonable objection. When the material or substance has been rendered harmless, Work in the affected area shall resume upon written agreement of the Owner and Contractor. By Change Order, the Contract Time shall be extended appropriately and the Contract Sum shall be increased in the amount of the Contractor's reasonable additional costs of shut-down, delay and start-up.

§ 10.3.3 To the fullest extent permitted by law, the Owner shall indemnify and hold harmless the Contractor, Subcontractors, Construction Manager, Architect, their consultants, and agents and employees of any of them from and against claims, damages, losses and expenses, including but not limited to attorneys' fees, arising out of or resulting from performance of the Work in the affected area if in fact the material or substance presents the risk of bodily injury or death as described in Section 10.3.1 and has not been rendered harmless, provided that such claim, damage, loss or expense is attributable to bodily injury, sickness, disease or death, or to injury to or destruction of tangible property (other than the Work itself), except to the extent that such damage, loss or expense is due to the fault or negligence of the party seeking indemnity.

§ 10.3.4 The Owner shall not be responsible under this Section 10.3 for materials or substances the Contractor brings to the site unless such materials or substances are required by the Contract Documents. The Owner shall be responsible for materials or substances required by the Contract Documents, except to the extent of the Contractor's fault or negligence in the use and handling of such materials or substances.

AIA Document A232™ – 2009(rev. 12/11) (formerly A201™CMa – 1992). Copyright © 1992 and 2009 by The American Institute of Architects. All rights reserved. WARNING: This AIA® Document is protected by U.S. Copyright Law and International Treaties. Unauthorized reproduction or distribution of this AIA® Document, or any portion of it, may result in severe civil and criminal penalties, and will be prosecuted to the maximum extent possible under the law. This document was produced by AIA software at 14:33:23 on 04/16/2015 under Order No.1697299329_1 which expires on 01/26/2016, and is not for resale.
User Notes:

(1247311177)

§ **10.3.5** The Contractor shall indemnify the Owner for the cost and expense the Owner incurs (1) for remediation of a material or substance the Contractor brings to the site and negligently handles, or (2) where the Contractor fails to perform its obligations under Section 10.3.1, except to the extent that the cost and expense are due to the Owner's fault or negligence.

§ **10.3.6** If, without negligence on the part of the Contractor, the Contractor is held liable by a government agency for the cost of remediation of a hazardous material or substance solely by reason of performing Work as required by the Contract Documents, the Owner shall indemnify the Contractor for all cost and expense thereby incurred.

§ 10.4 Emergencies

In an emergency affecting safety of persons or property, the Contractor shall act, at the Contractor's discretion, to prevent threatened damage, injury or loss. Additional compensation or extension of time claimed by the Contractor on account of an emergency shall be determined as provided in Article 15 and Article 7.

ARTICLE 11 INSURANCE AND BONDS

§ 11.1 Contractor's Liability Insurance

§ **11.1.1** The Contractor shall purchase from and maintain in a company or companies lawfully authorized to do business in the jurisdiction in which the Project is located such insurance as will protect the Contractor from claims set forth below which may arise out of or result from the Contractor's operations and completed operations under the Contract and for which the Contractor may be legally liable, whether such operations be by the Contractor or by a Subcontractor or by anyone directly or indirectly employed by any of them, or by anyone for whose acts any of them may be liable:

- **.1** Claims under workers' compensation, disability benefit and other similar employee benefit acts which are applicable to the Work to be performed;
- **.2** Claims for damages because of bodily injury, occupational sickness or disease, or death of the Contractor's employees;
- **.3** Claims for damages because of bodily injury, sickness or disease, or death of any person other than the Contractor's employees;
- **.4** Claims for damages insured by usual personal injury liability coverage;
- **.5** Claims for damages, other than to the Work itself, because of injury to or destruction of tangible property, including loss of use resulting therefrom;
- **.6** Claims for damages because of bodily injury, death of a person or property damage arising out of ownership, maintenance or use of a motor vehicle; and
- **.7** Claims for bodily injury or property damage arising out of completed operations; and
- **.8** Claims involving contractual liability insurance applicable to the Contractor's obligations under Section 3.18.

§ **11.1.2** The insurance required by Section 11.1.1 shall be written for not less than limits of liability specified in the Contract Documents or required by law, whichever coverage is greater. Coverages, whether written on an occurrence or claims-made basis, shall be maintained without interruption from the date of commencement of the Work until the date of final payment and termination of any coverage required to be maintained after final payment and, with respect to the Contractor's completed operations coverage, until the expiration of the period for correction of Work or for such other period for maintenance of completed operations coverage as specified in the Contract Documents.

§ **11.1.3** Certificates of insurance acceptable to the Owner shall be submitted to the Construction Manager for transmittal to the Owner with a copy to the Architect prior to commencement of the Work and thereafter upon renewal or replacement of each required policy of insurance. These certificates and the insurance policies required by this Section 11.1 shall contain a provision that coverages afforded under the policies will not be canceled or allowed to expire until at least 30 days' prior written notice has been given to the Owner. An additional certificate evidencing continuation of liability coverage, including coverage for completed operations, shall be submitted with the final Application for Payment as required by Section 9.10.2 and thereafter upon renewal or replacement of such coverage until the expiration of the time required by Section 11.1.2. Information concerning reduction of coverage shall be furnished by the Contractor with reasonable promptness.

§ **11.1.4** The Contractor shall cause the commercial liability coverage required by the Contract Documents to include (1) the Construction Manager, the Construction Manager's consultants, the Owner, the Architect, and the

Init.
/
AIA Document A232™ – 2009(rev. 12/11) (formerly A201™CMa – 1992). Copyright © 1992 and 2009 by The American Institute of Architects. All rights reserved. WARNING: This AIA® Document is protected by U.S. Copyright Law and International Treaties. Unauthorized reproduction or distribution of this AIA® Document, or any portion of it, may result in severe civil and criminal penalties, and will be prosecuted to the maximum extent possible under the law. This document was produced by AIA software at 14:33:23 on 04/16/2015 under Order No.1697299329_1 which expires on 01/26/2016, and is not for resale.
User Notes:

(1247311177)

Architect's consultants as additional insureds for claims caused in whole or in part by the Contractor's negligent acts or omissions during the Contractor's operations; and (2) the Owner as an additional insured for claims caused in whole or in part by the Contractor's negligent acts or omissions during the Contractor's completed operations.

§ 11.2 Owner's Liability Insurance
The Owner shall be responsible for purchasing and maintaining the Owner's usual liability insurance.

§ 11.3 Property Insurance
§ 11.3.1 Unless otherwise provided, the Owner shall purchase and maintain, in a company or companies lawfully authorized to do business in the jurisdiction in which the Project is located, property insurance written on a builder's risk "all risk" or equivalent policy form in the amount of the initial Contract Sum, plus value of subsequent Contract modifications and cost of materials supplied or installed by others, comprising total value for the entire Project at the site on a replacement cost basis without optional deductibles. Such property insurance shall be maintained, unless otherwise provided in the Contract Documents or otherwise agreed in writing by all persons and entities who are beneficiaries of such insurance, until final payment has been made as provided in Section 9.10 or until no person or entity other than the Owner has an insurable interest in the property required by this Section 11.3 to be covered, whichever is later. This insurance shall include interests of the Owner, the Contractor, Subcontractors and Sub-subcontractors in the Project.

§ 11.3.1.1 Property insurance shall be on an "all-risk" or equivalent policy form and shall include, without limitation, insurance against the perils of fire (with extended coverage) and physical loss or damage including, without duplication of coverage, theft, vandalism, malicious mischief, collapse, earthquake, flood, windstorm, falsework, testing and startup, temporary buildings and debris removal including demolition occasioned by enforcement of any applicable legal requirements, and shall cover reasonable compensation for the Architect's, Contractor's, and Construction Manager's services and expenses required as a result of such insured loss.

§ 11.3.1.2 If the Owner does not intend to purchase such property insurance required by the Contract and with all of the coverages in the amount described above, the Owner shall so inform the Contractor in writing prior to commencement of the Work. The Contractor may then effect insurance that will protect the interests of the Contractor, Subcontractors and Sub-subcontractors in the Work, and by appropriate Change Order the cost thereof shall be charged to the Owner. If the Contractor is damaged by the failure or neglect of the Owner to purchase or maintain insurance as described above, without so notifying the Contractor in writing, then the Owner shall bear all reasonable costs properly attributable thereto.

§ 11.3.1.3 If the property insurance requires deductibles, the Owner shall pay costs not covered because of such deductibles.

§ 11.3.1.4 This property insurance shall cover portions of the Work stored off the site, and also portions of the Work in transit.

§ 11.3.1.5 Partial occupancy or use in accordance with Section 9.9 shall not commence until the insurance company or companies providing property insurance have consented to such partial occupancy or use by endorsement or otherwise. The Owner and the Contractor shall take reasonable steps to obtain consent of the insurance company or companies and shall, without mutual written consent, take no action with respect to partial occupancy or use that would cause cancellation, lapse or reduction of insurance.

§ 11.3.2 Boiler and Machinery Insurance. The Owner shall purchase and maintain boiler and machinery insurance required by the Contract Documents or by law, which shall specifically cover such insured objects during installation and until final acceptance by the Owner; this insurance shall include interests of the Owner, Construction Manager, Contractor, Subcontractors and Sub-subcontractors in the Work, and the Owner and Contractor shall be named insureds.

§ 11.3.3 Loss of Use Insurance. The Owner, at the Owner's option, may purchase and maintain such insurance as will insure the Owner against loss of use of the Owner's property due to fire or other hazards, however caused. The Owner waives all rights of action against the Contractor for loss of use of the Owner's property, including consequential losses due to fire or other hazards however caused.

AIA Document A232™ – 2009(rev. 12/11) (formerly A201™CMa – 1992). Copyright © 1992 and 2009 by The American Institute of Architects. All rights reserved. WARNING: This AIA® Document is protected by U.S. Copyright Law and International Treaties. Unauthorized reproduction or distribution of this AIA® Document, or any portion of it, may result in severe civil and criminal penalties, and will be prosecuted to the maximum extent possible under the law. This document was produced by AIA software at 14:33:23 on 04/16/2015 under Order No.1697299329_1 which expires on 01/26/2016, and is not for resale.
User Notes:

(1247311177)

§ 11.3.4 If the Contractor requests in writing that insurance for risks other than those described herein or other special causes of loss be included in the property insurance policy, the Owner shall, if possible, include such insurance, and the cost thereof shall be charged to the Contractor by appropriate Change Order.

§ 11.3.5 If during the Project construction period the Owner insures properties, real or personal or both, adjoining or adjacent to the site by property insurance under policies separate from those insuring the Project, or if after final payment property insurance is to be provided on the completed Project through a policy or policies other than those insuring the Project during the construction period, the Owner shall waive all rights in accordance with the terms of Section 11.3.7 for damages caused by fire or other causes of loss covered by this separate property insurance. All separate policies shall provide this waiver of subrogation by endorsement or otherwise.

§ 11.3.6 Before an exposure to loss may occur, the Owner shall file with the Contractor a copy of each policy that includes insurance coverages required by this Section 11.3. Each policy shall contain all generally applicable conditions, definitions, exclusions and endorsements related to this Project. Each policy shall contain a provision that the policy will not be canceled or allowed to expire, and that its limits will not be reduced, until at least 30 days' prior written notice has been given to the Contractor.

§ 11.3.7 Waivers of Subrogation. The Owner and Contractor waive all rights against (1) each other and any of their subcontractors, sub-subcontractors, agents and employees each of the other, and (2) the Construction Manager, Architect, Architect's consultants, separate contractors described in Article 6, if any, and any of their subcontractors, sub-subcontractors, agents and employees, for damages caused by fire or other causes of loss to the extent covered by property insurance obtained pursuant to this Section 11.3 or other property insurance applicable to the Work, except such rights as the Owner and Contractor may have to the proceeds of such insurance held by the Owner as fiduciary. The Owner or Contractor, as appropriate, shall require of the Construction Manager, Construction Manager's consultants, Architect, Architect's consultants, Owner's separate contractors described in Article 6, if any, and the subcontractors, sub-subcontractors, agents and employees of any of them, by appropriate agreements, written where legally required for validity, similar waivers each in favor of other parties enumerated herein. The policies shall provide such waivers of subrogation by endorsement or otherwise. A waiver of subrogation shall be effective as to a person or entity even though that person or entity would otherwise have a duty of indemnification, contractual or otherwise, did not pay the insurance premium directly or indirectly, and whether or not the person or entity had an insurable interest in the property damaged.

§ 11.3.8 A loss insured under the Owner's property insurance shall be adjusted by the Owner as fiduciary and made payable to the Owner as fiduciary for the insureds, as their interests may appear, subject to requirements of any applicable mortgagee clause and of Section 11.3.10. The Contractor shall pay Subcontractors their just shares of insurance proceeds received by the Contractor, and by appropriate agreements, written where legally required for validity, shall require Subcontractors to make payments to their Sub-subcontractors in similar manner.

§ 11.3.9 If required in writing by a party in interest, the Owner as fiduciary shall, upon occurrence of an insured loss, give bond for proper performance of the Owner's duties. The cost of required bonds shall be charged against proceeds received as fiduciary. The Owner shall deposit in a separate account proceeds so received, which the Owner shall distribute in accordance with such agreement as the parties in interest may reach, or as determined in accordance with the method of binding dispute resolution selected in the Agreement between the Owner and Contractor. If after such loss no other special agreement is made and unless the Owner terminates the Contract for convenience, replacement of damaged property shall be performed by the Contractor after notification of a Change in the Work in accordance with Article 7.

§ 11.3.10 The Owner as fiduciary shall have power to adjust and settle a loss with insurers unless one of the parties in interest shall object in writing within five days after occurrence of loss to the Owner's exercise of this power; if such objection is made, the dispute shall be resolved in the manner selected by the Owner and Contractor as the method of binding dispute resolution in the Agreement. If the Owner and Contractor have selected arbitration as the method of binding dispute resolution, the Owner as fiduciary shall make settlement with insurers or distribution of insurance proceeds in accordance with the direction of the arbitrators.

AIA Document A232™ – 2009(rev. 12/11) (formerly A201™CMa – 1992). Copyright © 1992 and 2009 by The American Institute of Architects. All rights reserved. WARNING: This AIA® Document is protected by U.S. Copyright Law and International Treaties. Unauthorized reproduction or distribution of this AIA® Document, or any portion of it, may result in severe civil and criminal penalties, and will be prosecuted to the maximum extent possible under the law. This document was produced by AIA software at 14:33:23 on 04/16/2015 under Order No.1697299329_1 which expires on 01/26/2016, and is not for resale.
User Notes:

(1247311177)

§ 11.4 Performance Bond and Payment Bond

§ 11.4.1 The Owner shall have the right to require the Contractor to furnish bonds covering faithful performance of the Contract and payment of obligations arising thereunder as stipulated in bidding requirements or specifically required in the Contract Documents on the date of execution of the Contract.

§ 11.4.2 Upon the request of any person or entity appearing to be a potential beneficiary of bonds covering payment of obligations arising under the Contract, the Contractor shall promptly furnish a copy of the bonds or shall authorize a copy to be furnished.

ARTICLE 12 UNCOVERING AND CORRECTION OF WORK

§ 12.1 Uncovering of Work

§ 12.1.1 If a portion of the Work is covered contrary to the Construction Manager's or Architect's request or to requirements specifically expressed in the Contract Documents, it must, if requested in writing by either, be uncovered for their observation and be replaced at the Contractor's expense without change in the Contract Time.

§ 12.1.2 If a portion of the Work has been covered which the Construction Manager or Architect has not specifically requested to observe prior to its being covered, the Construction Manager or Architect may request to see such Work and it shall be uncovered by the Contractor. If such Work is in accordance with the Contract Documents, costs of uncovering and replacement shall, by appropriate Change Order, be at the Owner's expense. If such Work is not in accordance with the Contract Documents, such costs and the cost of correction shall be at the Contractor's expense unless the condition was caused by the Owner or one of the other Contractors in which event the Owner shall be responsible for payment of such costs.

§ 12.2 Correction of Work

§ 12.2.1 Before or After Substantial Completion

The Contractor shall promptly correct Work rejected by the Construction Manager or Architect or failing to conform to the requirements of the Contract Documents, whether discovered before or after Substantial Completion and whether or not fabricated, installed or completed. Costs of correcting such rejected Work, including additional testing and inspections, the cost of uncovering and replacement, and compensation for the Construction Manager's and Architect's services and expenses made necessary thereby, shall be at the Contractor's expense.

§ 12.2.2 After Substantial Completion

§ 12.2.2.1 In addition to the Contractor's obligations under Section 3.5, if, within one year after the date of Substantial Completion of the Work or designated portion thereof, or after the date for commencement of warranties established under Section 9.9.1, or by terms of an applicable special warranty required by the Contract Documents, any of the Work is found to be not in accordance with the requirements of the Contract Documents, the Contractor shall correct it promptly after receipt of written notice from the Owner to do so unless the Owner has previously given the Contractor a written acceptance of such condition. The Owner shall give such notice promptly after discovery of the condition. During the one-year period for correction of Work, if the Owner fails to notify the Contractor and give the Contractor an opportunity to make the correction, the Owner waives the rights to require correction by the Contractor and to make a claim for breach of warranty. If the Contractor fails to correct nonconforming Work within a reasonable time during that period after receipt of notice from the Owner or Architect, the Owner may correct it in accordance with Section 2.4.

§ 12.2.2.2 The one-year period shall be extended with respect to portions of Work first performed after Substantial Completion by the period of time between Substantial Completion and the actual completion of that portion of the Work.

§ 12.2.2.3 The one-year period for correction of Work shall not be extended by corrective Work performed by the Contractor pursuant to this Section 12.2.

§ 12.2.3 The Contractor shall remove from the site portions of the Work that are not in accordance with the requirements of the Contract Documents and are neither corrected by the Contractor nor accepted by the Owner.

§ 12.2.4 The Contractor shall bear the cost of correcting destroyed or damaged construction, whether completed or partially completed, of the Owner or separate contractors or other Multiple Prime Contractors caused by the

Init.
/
AIA Document A232™ – 2009(rev. 12/11) (formerly A201™CMa – 1992). Copyright © 1992 and 2009 by The American Institute of Architects. All rights reserved. WARNING: This AIA® Document is protected by U.S. Copyright Law and International Treaties. Unauthorized reproduction or distribution of this AIA® Document, or any portion of it, may result in severe civil and criminal penalties, and will be prosecuted to the maximum extent possible under the law. This document was produced by AIA software at 14:33:23 on 04/16/2015 under Order No.1697299329_1 which expires on 01/26/2016, and is not for resale.
User Notes:

(1247311177)

Contractor's correction or removal of Work that is not in accordance with the requirements of the Contract Documents.

§ 12.2.5 Nothing contained in this Section 12.2 shall be construed to establish a period of limitation with respect to other obligations the Contractor has under the Contract Documents. Establishment of the one-year period for correction of Work as described in Section 12.2.2 relates only to the specific obligation of the Contractor to correct the Work, and has no relationship to the time within which the obligation to comply with the Contract Documents may be sought to be enforced, nor to the time within which proceedings may be commenced to establish the Contractor's liability with respect to the Contractor's obligations other than specifically to correct the Work.

§ 12.3 Acceptance of Nonconforming Work

If the Owner prefers to accept Work that is not in accordance with the requirements of the Contract Documents, the Owner may do so instead of requiring its removal and correction, in which case the Contract Sum will be reduced as appropriate and equitable. Such adjustment shall be effected whether or not final payment has been made.

ARTICLE 13 MISCELLANEOUS PROVISIONS

§ 13.1 Governing Law

The Contract shall be governed by the law of the place where the Project is located except that, if the parties have selected arbitration as the method of binding dispute resolution, the Federal Arbitration Act shall govern Section 15.4.

§ 13.2 Successors and Assigns

§ 13.2.1 The Owner and Contractor respectively bind themselves, their partners, successors, assigns and legal representatives to covenants, agreements and obligations contained in the Contract Documents. Except as provided in Section 13.2.2, neither party to the Contract shall assign the Contract as a whole without written consent of the other. If either party attempts to make such an assignment without such consent, that party shall nevertheless remain legally responsible for all obligations under the Contract.

§ 13.2.2 The Owner may, without consent of the Contractor, assign the Contract to a lender providing construction financing for the Project, if the lender assumes the Owner's rights and obligations under the Contract Documents. The Contractor shall execute all consents reasonably required to facilitate such assignment.

§ 13.3 Written Notice

Written notice shall be deemed to have been duly served if delivered in person to the individual, to a member of the firm or entity or to an officer of the corporation for which it was intended; or if delivered at or sent by registered or certified mail or by courier service providing proof of delivery to, the last business address known to the party giving notice.

§ 13.4 Rights and Remedies

§ 13.4.1 Duties and obligations imposed by the Contract Documents and rights and remedies available thereunder shall be in addition to and not a limitation of duties, obligations, rights and remedies otherwise imposed or available by law.

§ 13.4.2 No action or failure to act by the Owner, Construction Manager, Architect or Contractor shall constitute a waiver of a right or duty afforded them under the Contract, nor shall such action or failure to act constitute approval of or acquiescence in a breach thereunder, except as may be specifically agreed in writing.

§ 13.5 Tests and Inspections

§ 13.5.1 Tests, inspections and approvals of portions of the Work shall be made as required by the Contract Documents and by applicable laws, statutes, ordinances, codes, rules and regulations or lawful orders of public authorities. Unless otherwise provided, the Contractor shall make arrangements for such tests, inspections and approvals with an independent testing laboratory or entity acceptable to the Owner, or with the appropriate public authority, and shall bear all related costs of tests, inspections and approvals. The Contractor shall give the Construction Manager and Architect timely notice of when and where tests and inspections are to be made so that the Construction Manager and Architect may be present for such procedures. The Owner shall bear costs of (1) tests, inspections or approvals that do not become requirements until after bids are received or negotiations concluded, and

AIA Document A232™ – 2009(rev. 12/11) (formerly A201™CMa – 1992). Copyright © 1992 and 2009 by The American Institute of Architects. All rights reserved. WARNING: This AIA® Document is protected by U.S. Copyright Law and International Treaties. Unauthorized reproduction or distribution of this AIA® Document, or any portion of it, may result in severe civil and criminal penalties, and will be prosecuted to the maximum extent possible under the law. This document was produced by AIA software at 14:33:23 on 04/16/2015 under Order No.1697299329_1 which expires on 01/26/2016, and is not for resale.
User Notes:

(1247311177)

(2) tests, inspections or approvals where building codes or applicable laws or regulations prohibit the Owner from delegating their cost to the Contractor.

§ 13.5.2 If the Construction Manager, Architect, Owner or public authorities having jurisdiction determine that portions of the Work require additional testing, inspection or approval not included under Section 13.5.1, the Construction Manager and Architect will, upon written authorization from the Owner, instruct the Contractor to make arrangements for such additional testing, inspection or approval by an entity acceptable to the Owner, and the Contractor shall give timely notice to the Construction Manager and Architect of when and where tests and inspections are to be made so that the Construction Manager and Architect may be present for such procedures. Such costs except as provided in Section 13.5.3, shall be at the Owner's expense.

§ 13.5.3 If such procedures for testing, inspection or approval under Sections 13.5.1 and 13.5.2 reveal failure of the portions of the Work to comply with requirements established by the Contract Documents, all costs made necessary by such failure including those of repeated procedures and compensation for the Construction Manager's and Architect's services and expenses shall be at the Contractor's expense.

§ 13.5.4 Required certificates of testing, inspection or approval shall, unless otherwise required by the Contract Documents, be secured by the Contractor and promptly delivered to the Construction Manager for transmittal to the Architect.

§ 13.5.5 If the Construction Manager or Architect is to observe tests, inspections or approvals required by the Contract Documents, the Construction Manager or Architect will do so promptly and, where practicable, at the normal place of testing.

§ 13.5.6 Tests or inspections conducted pursuant to the Contract Documents shall be made promptly to avoid unreasonable delay in the Work.

§ 13.6 Interest

Payments due and unpaid under the Contract Documents shall bear interest from the date payment is due at such rate as the parties may agree upon in writing or, in the absence thereof, at the legal rate prevailing from time to time at the place where the Project is located.

§ 13.7 Time Limits on Claims

The Owner and the Contractor shall commence all claims and causes of action, whether in contract, tort, breach of warranty or otherwise, against the other arising out of or related to the Contract in accordance with the requirements of the final dispute resolution method selected in the Agreement within the time period specified by applicable law, but in any case not more than 10 years after the date of Substantial Completion of the Work. The Owner and the Contractor waive all claims and causes of action not commenced in accordance with this Section 13.7.

ARTICLE 14 TERMINATION OR SUSPENSION OF THE CONTRACT

§ 14.1 Termination by the Contractor

§ 14.1.1 The Contractor may terminate the Contract if the Work is stopped for a period of 30 consecutive days through no act or fault of the Contractor or a Subcontractor, Sub-subcontractor or their agents or employees or any other persons or entities performing portions of the Work under direct or indirect contract with the Contractor, for any of the following reasons:

- .1 Issuance of an order of a court or other public authority having jurisdiction that requires all Work to be stopped;
- .2 An act of government, such as a declaration of national emergency that requires all Work to be stopped;
- .3 Because the Construction Manager has not certified or the Architect has not issued a Certificate for Payment and has not notified the Contractor of the reason for withholding certification as provided in Section 9.4, or because the Owner has not made payment on a Certificate for Payment within the time stated in the Contract Documents; or
- .4 The Owner has failed to furnish to the Contractor promptly, upon the Contractor's request, reasonable evidence as required by Section 2.2.1.

Init.
/
AIA Document A232™ – 2009(rev. 12/11) (formerly A201™CMa – 1992). Copyright © 1992 and 2009 by The American Institute of Architects. All rights reserved. WARNING: This AIA® Document is protected by U.S. Copyright Law and International Treaties. Unauthorized reproduction or distribution of this AIA® Document, or any portion of it, may result in severe civil and criminal penalties, and will be prosecuted to the maximum extent possible under the law. This document was produced by AIA software at 14:33:23 on 04/16/2015 under Order No.1697299329_1 which expires on 01/26/2016, and is not for resale.
User Notes:

(1247311177)

§ 14.1.2 The Contractor may terminate the Contract if, through no act or fault of the Contractor or a Subcontractor, Sub-subcontractor or their agents or employees or any other persons or entities performing portions of the Work under direct or indirect contract with the Contractor, repeated suspensions, delays or interruptions of the entire Work by the Owner as described in Section 14.3 constitute in the aggregate more than 100 percent of the total number of days scheduled for completion, or 120 days in any 365-day period, whichever is less.

§ 14.1.3 If one of the reasons described in Section 14.1.1 or 14.1.2 exists, the Contractor may, upon seven days' written notice to the Owner, Construction Manager and Architect, terminate the Contract and recover from the Owner payment for Work executed including reasonable overhead and profit, costs incurred by reason of such termination, and damages.

§ 14.1.4 If the Work is stopped for a period of 60 consecutive days through no act or fault of the Contractor or a Subcontractor or their agents or employees or any other persons performing portions of the Work under contract with the Contractor because the Owner has repeatedly failed to fulfill the Owner's obligations under the Contract Documents with respect to matters important to the progress of the Work, the Contractor may, upon seven additional days' written notice to the Owner, Construction Manager and Architect, terminate the Contract and recover from the Owner as provided in Section 14.1.3.

§ 14.2 Termination by the Owner for Cause

§ 14.2.1 The Owner may terminate the Contract if the Contractor

- .1 repeatedly refuses or fails to supply enough properly skilled workers or proper materials;
- .2 fails to make payment to Subcontractors for materials or labor in accordance with the respective agreements between the Contractor and the Subcontractors;
- .3 repeatedly disregards applicable laws, statutes, ordinances, codes, rules and regulations, or lawful orders of a public authority; or
- .4 otherwise is guilty of substantial breach of a provision of the Contract Documents.

§ 14.2.2 When any of the above reasons exist, the Owner, after consultation with the Construction Manager, and upon certification by the Initial Decision Maker that sufficient cause exists to justify such action, may without prejudice to any other rights or remedies of the Owner and after giving the Contractor and the Contractor's surety, if any, seven days' written notice, terminate employment of the Contractor and may, subject to any prior rights of the surety:

- .1 Exclude the Contractor from the site and take possession of all materials, equipment, tools, and construction equipment and machinery thereon owned by the Contractor;
- .2 Accept assignment of subcontracts pursuant to Section 5.4; and
- .3 Finish the Work by whatever reasonable method the Owner may deem expedient. Upon written request of the Contractor, the Owner shall furnish to the Contractor a detailed accounting of the costs incurred by the Owner in finishing the Work.

§ 14.2.3 When the Owner terminates the Contract for one of the reasons stated in Section 14.2.1, the Contractor shall not be entitled to receive further payment until the Work is finished.

§ 14.2.4 If the unpaid balance of the Contract Sum exceeds costs of finishing the Work, including compensation for the Construction Manager's and Architect's services and expenses made necessary thereby, and other damages incurred by the Owner and not expressly waived, such excess shall be paid to the Contractor. If such costs and damages exceed the unpaid balance, the Contractor shall pay the difference to the Owner. The amount to be paid to the Contractor or Owner, as the case may be, shall, upon application, be certified by the Initial Decision Maker after consultation with the Construction Manager, and this obligation for payment shall survive termination of the Contract.

§ 14.3 Suspension by the Owner for Convenience

§ 14.3.1 The Owner may, without cause, order the Contractor in writing to suspend, delay or interrupt the Work in whole or in part for such period of time as the Owner may determine.

§ 14.3.2 The Contract Sum and the Contract Time shall be adjusted for increases in the cost and time caused by suspension, delay or interruption as described in Section 14.3.1. Adjustment of the Contract Sum shall include profit. No adjustment shall be made to the extent:

AIA Document A232™ – 2009(rev. 12/11) (formerly A201™CMa – 1992). Copyright © 1992 and 2009 by The American Institute of Architects. All rights reserved. WARNING: This AIA® Document is protected by U.S. Copyright Law and International Treaties. Unauthorized reproduction or distribution of this AIA® Document, or any portion of it, may result in severe civil and criminal penalties, and will be prosecuted to the maximum extent possible under the law. This document was produced by AIA software at 14:33:23 on 04/16/2015 under Order No.1697299329_1 which expires on 01/26/2016, and is not for resale.
User Notes:

(1247311177)

.1 that performance is, was or would have been so suspended, delayed or interrupted by another cause for which the Contractor is responsible; or

.2 that an equitable adjustment is made or denied under another provision of this Contract.

§ 14.4 Termination by the Owner for Convenience

§ 14.4.1 The Owner may, at any time, terminate the Contract for the Owner's convenience and without cause.

§ 14.4.2 Upon receipt of written notice from the Owner of such termination for the Owner's convenience, the Contractor shall

.1 cease operations as directed by the Owner in the notice;

.2 take actions necessary, or that the Owner may direct, for the protection and preservation of the Work; and

.3 except for Work directed to be performed prior to the effective date of termination stated in the notice, terminate all existing subcontracts and purchase orders and enter into no further subcontracts and purchase orders.

§ 14.4.3 In case of such termination for the Owner's convenience, the Contractor shall be entitled to receive payment for Work executed, and costs incurred by reason of such termination, along with reasonable overhead and profit on the Work not executed.

ARTICLE 15 CLAIMS AND DISPUTES

§ 15.1 Claims

§ 15.1.1 Definition. A Claim is a demand or assertion by one of the parties seeking, as a matter of right, payment of money, or other relief with respect to the terms of the Contract. The term "Claim" also includes other disputes and matters in question between the Owner and Contractor arising out of or relating to the Contract The responsibility to substantiate Claims shall rest with the party making the Claim.

§ 15.1.2 Notice of Claims. Claims by either the Owner or Contractor must be initiated by written notice to the other party and to the Initial Decision Maker with a copy sent to the Construction Manager and Architect, if the Construction Manager and or Architect is not serving as the Initial Decision Maker. Claims by either party must be initiated within 21 days after occurrence of the event giving rise to such Claim or within 21 days after the claimant first recognizes the condition giving rise to the Claim, whichever is later.

§ 15.1.3 Continuing Contract Performance. Pending final resolution of a Claim, except as otherwise agreed in writing or as provided in Section 9.7 and Article 14, the Contractor shall proceed diligently with performance of the Contract and the Owner shall continue to make payments in accordance with the Contract Documents. The Construction Manager will prepare Change Orders and the Architect will issue a Certificate for Payment or Project Certificate for Payment in accordance with the decisions of the Initial Decision Maker.

§ 15.1.4 Claims for Additional Cost. If the Contractor wishes to make a Claim for an increase in the Contract Sum, written notice as provided herein shall be given before proceeding to execute the Work. Prior notice is not required for Claims relating to an emergency endangering life or property arising under Section 10.3.

§ 15.1.5 Claims for Additional Time

§ 15.1.5.1 If the Contractor wishes to make a Claim for an increase in the Contract Time, written notice as provided herein shall be given. The Contractor's Claim shall include an estimate of cost and of probable effect of delay on progress of the Work. In the case of a continuing delay only one Claim is necessary.

§ 15.1.5.2 If adverse weather conditions are the basis for a Claim for additional time, such Claim shall be documented by data substantiating that weather conditions were abnormal for the period of time, could not have been reasonably anticipated and had an adverse effect on the scheduled construction.

§ 15.1.6 Claims for Consequential Damages. The Contractor and Owner waive Claims against each other for consequential damages arising out of or relating to this Contract. This mutual waiver includes

.1 damages incurred by the Owner for rental expenses, for losses of use, income, profit, financing, business and reputation, and for loss of management or employee productivity or of the services of such persons; and

Init.

/

AIA Document A232™ – 2009(rev. 12/11) (formerly A201™CMa – 1992). Copyright © 1992 and 2009 by The American Institute of Architects. All rights reserved. WARNING: This AIA® Document is protected by U.S. Copyright Law and International Treaties. Unauthorized reproduction or distribution of this AIA® Document, or any portion of it, may result in severe civil and criminal penalties, and will be prosecuted to the maximum extent possible under the law. This document was produced by AIA software at 14:33:23 on 04/16/2015 under Order No.1697299329_1 which expires on 01/26/2016, and is not for resale.

User Notes:

(1247311177)

.2 damages incurred by the Contractor for principal office expenses including the compensation of personnel stationed there, for losses of financing, business and reputation, and for loss of profit except anticipated profit arising directly from the Work.

This mutual waiver is applicable, without limitation, to all consequential damages due to either party's termination in accordance with Article 14. Nothing contained in this Section 15.1.6 shall be deemed to preclude an award of liquidated damages, when applicable, in accordance with the requirements of the Contract Documents.

§ 15.2 Initial Decision

§ 15.2.1 Claims, excluding those arising under Sections 10.3, 10.4, 11.3.9, and 11.3.10, shall be referred to the Initial Decision Maker for initial decision. The Architect will serve as the Initial Decision Maker, unless otherwise indicated in the Agreement. Except for those Claims excluded by this Section 15.2.1, an initial decision shall be required as a condition precedent to mediation of any Claim arising prior to the date final payment is due, unless 30 days have passed after the Claim has been referred to the Initial Decision Maker with no decision having been rendered. Unless the Initial Decision Maker and all affected parties agree, the Initial Decision Maker will not decide disputes between the Contractor and persons or entities other than the Owner.

§ 15.2.2 The Initial Decision Maker will review Claims and within ten days of the receipt of a Claim take one or more of the following actions: (1) request additional supporting data from the claimant or a response with supporting data from the other party, (2) reject the Claim in whole or in part, (3) approve the Claim, (4) suggest a compromise, or (5) advise the parties that the Initial Decision Maker is unable to resolve the Claim if the Initial Decision Maker lacks sufficient information to evaluate the merits of the Claim or if the Initial Decision Maker concludes that, in the Initial Decision Maker's sole discretion, it would be inappropriate for the Initial Decision Maker to resolve the Claim.

§ 15.2.3 In evaluating Claims, the Initial Decision Maker may, but shall not be obligated to, consult with or seek information from either party or from persons with special knowledge or expertise who may assist the Initial Decision Maker in rendering a decision. The Initial Decision Maker may request the Owner to authorize retention of such persons at the Owner's expense.

§ 15.2.4 If the Initial Decision Maker requests a party to provide a response to a Claim or to furnish additional supporting data, such party shall respond, within ten days after receipt of such request, and shall either (1) provide a response on the requested supporting data, (2) advise the Initial Decision Maker when the response or supporting data will be furnished or (3) advise the Initial Decision Maker that no supporting data will be furnished. Upon receipt of the response or supporting data, if any, the Initial Decision Maker will either reject or approve the Claim in whole or in part.

§ 15.2.5 The Initial Decision Maker will render an initial decision approving or rejecting the Claim, or indicating that the Initial Decision Maker is unable to resolve the Claim. This initial decision shall (1) be in writing; (2) state the reasons therefor; and (3) notify the parties and the Architect and Construction Manager, if the Architect or Construction Manager is not serving as the Initial Decision Maker, of any change in the Contract Sum or Contract Time or both. The initial decision shall be final and binding on the parties but subject to mediation and, if the parties fail to resolve their dispute through mediation, to binding dispute resolution.

§ 15.2.6 Either party may file for mediation of an initial decision at any time, subject to the terms of Section 15.2.6.1.

§ 15.2.6.1 Either party may, within 30 days from the date of an initial decision, demand in writing that the other party file for mediation within 60 days of the initial decision. If such a demand is made and the party receiving the demand fails to file for mediation within the time required, then both parties waive their rights to mediate or pursue binding dispute resolution proceedings with respect to the initial decision.

§ 15.2.7 In the event of a Claim against the Contractor, the Owner may, but is not obligated to, notify the surety, if any of the nature and amount of the Claim. If the Claim relates to a possibility of a Contractor's default, the Owner may, but is not obligated to, notify the surety and request the surety's assistance in resolving the controversy.

AIA Document A232™ – 2009(rev. 12/11) (formerly A201™CMa – 1992). Copyright © 1992 and 2009 by The American Institute of Architects. All rights reserved. WARNING: This AIA® Document is protected by U.S. Copyright Law and International Treaties. Unauthorized reproduction or distribution of this AIA® Document, or any portion of it, may result in severe civil and criminal penalties, and will be prosecuted to the maximum extent possible under the law. This document was produced by AIA software at 14:33:23 on 04/16/2015 under Order No.1697299329_1 which expires on 01/26/2016, and is not for resale.
User Notes:

§ **15.2.8** If a Claim relates to or is the subject of a mechanic's lien, the party asserting such Claim may proceed in accordance with applicable law to comply with the lien notice or filing deadlines.

§ 15.3 Mediation

§ **15.3.1** Claims, disputes, or other matters in controversy arising out of or related to the Contract except those waived as provided for in Sections 9.10.4, 9.10.5, and 15.1.6 shall be subject to mediation as a condition precedent to binding dispute resolution.

§ **15.3.2** The parties shall endeavor to resolve their Claims by mediation which, unless the parties mutually agree otherwise, shall be administered by the American Arbitration Association in accordance with its Construction Industry Mediation Procedures in effect on the date of the Agreement. A request for mediation shall be made in writing, delivered to the other party to the Contract, and filed with the person or entity administering the mediation. The request may be made concurrently with the filing of binding dispute resolution proceedings but, in such event, mediation shall proceed in advance of binding dispute resolution proceedings, which shall be stayed pending mediation for a period of 60 days from the date of filing, unless stayed for a longer period by agreement of the parties or court order. If an arbitration is stayed pursuant to this Section 15.3.2, the parties may nonetheless proceed to the selection of the arbitrator(s) and agree upon a schedule for later proceedings.

§ **15.3.3** The parties shall share the mediator's fee and any filing fees equally. The mediation shall be held in the place where the Project is located, unless another location is mutually agreed upon. Agreements reached in mediation shall be enforceable as settlement agreements in any court having jurisdiction thereof.

§ 15.4 Arbitration

§ **15.4.1** If the parties have selected arbitration as the method for binding dispute resolution in the Agreement, any Claim subject to, but not resolved by, mediation shall be subject to arbitration which, unless the parties mutually agree otherwise, shall be administered by the American Arbitration Association in accordance with its Construction Industry Arbitration Rules in effect on the date of the Agreement. A demand for arbitration shall be made in writing, delivered to the other party to the Contract, and filed with the person or entity administering the arbitration. The party filing a notice of demand for arbitration must assert in the demand all Claims then known to that party on which arbitration is permitted to be demanded.

§ **15.4.1.1** A demand for arbitration shall be made no earlier than concurrently with the filing of a request for mediation, but in no event shall it be made after the date when the institution of legal or equitable proceedings based on the Claim would be barred by the applicable statute of limitations. For statute of limitations purposes, receipt of a written demand for arbitration by the person or entity administering the arbitration shall constitute the institution of legal or equitable proceedings based on the Claim.

§ **15.4.2** The award rendered by the arbitrator or arbitrators shall be final, and judgment may be entered upon it in accordance with applicable law in any court having jurisdiction thereof.

§ **15.4.3** The foregoing agreement to arbitrate and other agreements to arbitrate with an additional person or entity duly consented to by parties to the Agreement shall be specifically enforceable under applicable law in any court having jurisdiction thereof.

§ 15.4.4 Consolidation or Joinder

§ **15.4.4.1** Either party, at its sole discretion, may consolidate an arbitration conducted under this Agreement with any other arbitration to which it is a party provided that (1) the arbitration agreement governing the other arbitration permits consolidation, (2) the arbitrations to be consolidated substantially involve common questions of law or fact, and (3) the arbitrations employ materially similar procedural rules and methods for selecting arbitrator(s).

§ **15.4.4.2** Either party, at its sole discretion, may include by joinder persons or entities substantially involved in a common question of law or fact whose presence is required if complete relief is to be accorded in arbitration, provided that the party sought to be joined consents in writing to such joinder. Consent to arbitration involving an additional person or entity shall not constitute consent to arbitration of any claim, dispute or other matter in question not described in the written consent.

AIA Document A232™ – 2009(rev. 12/11) (formerly A201™CMa – 1992). Copyright © 1992 and 2009 by The American Institute of Architects. **All rights reserved. WARNING: This AIA® Document is protected by U.S. Copyright Law and International Treaties. Unauthorized reproduction or distribution of this AIA® Document, or any portion of it, may result in severe civil and criminal penalties, and will be prosecuted to the maximum extent possible under the law.** This document was produced by AIA software at 14:33:23 on 04/16/2015 under Order No.1697299329_1 which expires on 01/26/2016, and is not for resale.
User Notes:

(1247311177)

§ **15.4.4.3** The Owner and Contractor grant to any person or entity made a party to an arbitration conducted under this Section 15.4, whether by joinder or consolidation, the same rights of joinder and consolidation as the Owner and Contractor under this Agreement.

AIA Document A232™ – 2009(rev. 12/11) (formerly A201™CMa – 1992). Copyright © 1992 and 2009 by The American Institute of Architects. **All rights reserved. WARNING: This AIA® Document is protected by U.S. Copyright Law and International Treaties. Unauthorized reproduction or distribution of this AIA® Document, or any portion of it, may result in severe civil and criminal penalties, and will be prosecuted to the maximum extent possible under the law.** This document was produced by AIA software at 14:33:23 on 04/16/2015 under Order No.1697299329_1 which expires on 01/26/2016, and is not for resale.
User Notes:

(1247311177)

SUPPLEMENTARY GENERAL CONDITIONS A232-2009

The following supplements modify the "General Conditions of the Contract for Construction," AIA Document A232-2009. Where a portion of the General Conditions is modified or deleted by the Supplementary Conditions, the unaltered portions of the General Conditions shall remain in effect.

ARTICLE 1: GENERAL PROVISIONS

1.1 BASIC DEFINITIONS

1.1.1 THE CONTRACT DOCUMENTS

Delete the last sentence in its entirety and replace with the following:

"The Contract Documents also include Advertisement for Bid, Instructions to Bidder, sample forms, the Bid Form, the Contractor's completed Bid and the Award Letter."

1.2 CORRELATION AND INTENT OF THE CONTRACT DOCUMENTS

Add the following Paragraphs:

1.2.4 In the case of an inconsistency between the Drawings and the Specifications, or within either document not clarified by addendum, the better quality or greater quantity of work shall be provided in accordance with the Architect's interpretation.

1.2.5 The word "PROVIDE" as used in the Contract Documents shall mean "FURNISH AND INSTALL" and shall include, without limitation, all labor, materials, equipment, transportation, services and other items required to complete the Work.

1.2.6 The word "PRODUCT" as used in the Contract Documents means all materials, systems and equipment.

1.5 OWNERSHIP AND USE OF DRAWINGS, SPECIFICATIONS AND OTHER INSTRUMENTS OF SERVICE

Delete Paragraph 1.5.1 in its entirety and replace with the following:

"All pre-design studies, drawings, specifications and other documents, including those in electronic form, prepared by the Architect under this Agreement are, and shall remain, the property of the Owner whether the Project for which they are made is executed or not. Such documents may be used by the Owner to construct one or more like Projects without the approval of, or additional compensation to, the Architect. The Contractor,

Subcontractors, Sub-subcontractors and Material or Equipment Suppliers are authorized to use and reproduce applicable portions of the Drawings, Specifications and other documents prepared by the Architect and the Architect's consultants appropriate to and for use in the execution of their Work under the Contract Documents. They are not to be used by the Contractor or any Subcontractor, Sub-subcontractor or Material and Equipment Supplier on other Projects or for additions to this Project outside the scope of the Work without the specific written consent of the Owner, Architect and Architect's consultants.

The Architect shall not be liable for injury or damage resulting from the re-use of drawings and specifications if the Architect is not involved in the re-use Project. ."

Delete Paragraph 1.5.2 in its entirety.

ARTICLE 2: OWNER

2.1 General

2.1.2 Delete Paragraph 2.1.2 in its entirety.

2.2 INFORMATION AND SERVICES REQUIRED OF THE OWNER

2.2.1 Delete the last sentence in this paragraph.

2.2.3 Add the following sentence:

"The Contractor, at their expense shall bear the costs to accurately identify the location of all underground utilities in the area of their excavation and shall bear all cost for any repairs required, out of failure to accurately identify said utilities."

2.2.5 Delete Subparagraph 2.2.5 in its entirety and substitute the following:

2.2.5 The Contractor shall be furnished free of charge up to five (5) sets of the Drawings and Project Manuals. Additional sets will be furnished at the cost of reproduction, postage and handling.

ARTICLE 3: CONTRACTOR

3.2 REVIEW OF CONTRACT DOCUMENTS AND FIELD CONDITIONS BY CONTRACTOR

Delete the third sentence in Paragraph 3.2.4.

3.3 SUPERVISION AND CONSTRUCTION PROCEDURES

Add the following Paragraphs:

3.3.2.1 The Contractor shall immediately remove from the Work, whenever requested to do so by the Owner, any person who is considered by the Owner or Architect to be incompetent or disposed to be disorderly, or who for any reason is not satisfactory to the Owner, and that person shall not again be employed on the Work without the consent of the Owner or the Architect.

3.3.4 The Contractor must provide suitable storage facilities at the Site for the proper protection and safe storage of their materials. Consult the Owner and the Architect before storing any materials.

3.3.5 When any room is used as a shop, storeroom, office, etc., by the Contractor or Subcontractor(s) during the construction of the Work, the Contractor making use of these areas will be held responsible for any repairs, patching or cleaning arising from such use.

3.4 LABOR AND MATERIALS

Add the Following Paragraphs:

3.4.4 Before starting the Work, each Contractor shall carefully examine all preparatory Work that has been executed to receive their Work. Check carefully, by whatever means are required, to insure that its Work and adjacent, related Work, will finish to proper contours, planes and levels. Promptly notify the General Contractor/Construction Manager of any defects or imperfections in preparatory Work which will in any way affect satisfactory completion of its Work. Absence of such notification will be construed as an acceptance of preparatory Work and later claims of defects will not be recognized.

3.4.5 Under no circumstances shall the Contractor's Work proceed prior to preparatory Work proceed prior to preparatory Work having been completely cured, dried and/or otherwise made satisfactory to receive this Work. Responsibility for timely installation of all materials rests solely with the Contractor responsible for that Work, who shall maintain coordination at all times.

3.5 WARRANTY

Add the following Paragraphs:

3.5.1 The Contractor will warrant all materials and workmanship against original defects, except injury from proper and usual wear when used for the purpose intended, for one year after Acceptance by the Owner, and will maintain all items in condition that conforms with the Contract Documents during the period of warranty.

3.5.2 Non-conforming workduring the period of warranty will be corrected by the Contractor at its expense upon demand of the Owner, it being required that the Work conforms to the Contract Documents at the expiration of the warranty period.

3.5.3 In addition to the General Warranty there are other warranties required for certain items for different periods of time than the one year as above, and are particularly so stated in that part of the specifications referring to same. The said warranties will commence at the same time as the General Warranty.

3.5.4 If the Contractor fails to remedy any failure, defect or damage within a reasonable time after receipt of notice, the Owner will have the right to replace, repair, or otherwise remedy the failure, defect or damage at the Contractor's expense.

3.11 DOCUMENTS AND SAMPLES AT THE SITE

Add the following Paragraphs:

3.11.1 During the course of the Work, the Contractor shall maintain a record set of drawings on which the Contractor shall mark the actual physical location of all piping, valves, equipment, conduit, outlets, access panels, controls, actuators, including all appurtenances that will be concealed once construction is complete, etc., including all invert elevations.

3.11.2 At the completion of the project, the Contractor shall obtain a set of reproducible drawings from the Architect, and neatly transfer all information outlined in 3.11.1 to provide a complete record of the as-built conditions.

3.11.3 The Contractor shall provide two (2) prints of the as-built conditions, along with the reproducible drawings themselves, to the Owner and one (1) set to the Architect. In addition, attach one complete set to each of the Operating and Maintenance Instructions/Manuals.

3.17 In the second sentence of the paragraph, insert "indemnify and" between "shall" and "hold".

ARTICLE 4: ARCHITECT AND CONSTRUCTION MANAGER

4.1 General
4.1.2 Insert "As required by law," at the beginning of the first sentence.

4.2 Administration of the Contract

Delete the first sentence of Paragraph 4.2.10 and replace with the following:

The Architect will review and approve or take other appropriate action upon the Contractor's submittals such as Shop Drawings, Product Data and Samples for the purpose of checking for conformance with the Contract Documents.

Delete the second sentence of Paragraph 4.2.10 and replace with the following:

The Architect's action will be taken with such reasonable promptness as to cause no delay in the Work in the activities of the Owner, Contractor or separate Contractors, while allowing sufficient time in the Owner's professional judgment to permit adequate review.

Add the following to Paragraph 4.2.16:

There will be no full-time project representative provided by the Owner or Architect on this project.

Add to Paragraph 4.2.19 "and in compliance with all applicable codes, regulations and ordinances." to the end of the sentence.

ARTICLE 5: SUBCONTRACTORS

5.2 AWARD OF SUBCONTRACTS AND OTHER CONTRACTS FOR PORTIONS OF THE WORK

Delete Paragraph 5.2.3 in its entirety and replace with the following:

5.2.3 If the Owner, Architect or Construction Manager has reasonable objection to a person or entity proposed by the Contractor, the Contractor shall propose another to whom the Owner, Architect or Construction Manager has no reasonable objection, subject to the statutory requirements of 29 Delaware Code § 6962(d)(10)b.3 and 4.

ARTICLE 6: CONSTRUCTION BY OWNER OR BY SEPARATE CONTRACTORS

6.1 OWNER'S RIGHT TO PERFORM CONSTRUCTION AND TO AWARD SEPARATE CONTRACTS

Delete Paragraph 6.1.3 in its entirety and replace with the following:

"When separate contracts are awarded for different portions of the Project or other construction or operations on the site, the term "Contractor" in the Contract Documents in each case shall mean the Constructor who executes each separate Owner-Contractor Agreement."

6.2 MUTUAL RESPONSIBILITY

6.2.3 In the second sentence, strike the word "shall" and insert the word "may".

ARTICLE 7: CHANGES IN THE WORK

(SEE ARTICLE 7: CHANGES IN WORK IN THE GENERAL REQUIREMENTS)

ARTICLE 8: TIME

8.2 PROGRESS AND COMPLETION

Add the following Paragraphs:

8.2.1.1 Refer to Specification Section SUMMARY OF WORK for Contract time requirements.

8.2.4 If the Work falls behind the Progress Schedule as submitted by the Contractor, the Contractor shall employ additional labor and/or equipment necessary to bring the Work into compliance with the Progress Schedule at no additional cost to the Owner.

8.3 DELAYS AND EXTENSION OF TIME

8.3.1 Strike "arbitration" and insert "remedies at law or in equity".

Add the following Paragraph:

8.3.2.1 The Contractor shall update the status of the suspension, delay, or interruption of the Work with each Application for Payment. (The Contractor shall report the termination of such cause immediately upon the termination thereof.) Failure to comply with this procedure shall constitute a waiver for any claim for adjustment of time or price based upon said cause.

Delete Paragraph 8.3.3 in its entirety and replace with the following:

8.3.3 Except in the case of a suspension of the Work directed by the Owner, an extension of time under the provisions of Paragraph 8.3.1 shall be the Contractor's sole remedy in the progress of the Work and there shall be no payment or compensation to the Contractor for any expense or damage resulting from the delay.

Add the following Paragraph:

8.3.4 By permitting the Contractor to work after the expired time for completion of the project, the Owner does not waive its rights under the Contract.

8.3.5 The parties agree that Paragraph 8.3.3 of the Supplementary General Conditions does not apply to the Construction Manager in the event of a delay caused by a party other than the Construction Manager.

ARTICLE 9: PAYMENTS AND COMPLETION

9.2 SCHEDULE OF VALUES

Add the following Paragraphs:

9.2.1 The Schedule of Values shall be submitted using AIA Document G702, Continuation Sheet to G703.

9.3 APPLICATIONS FOR PAYMENT

Add the following Paragraph:

9.3.1.3 Application for Payment shall be submitted on AIA Document G702 "Application and Certificate for Payment", supported by AIA Document G703 "Continuation Sheet". Said Applications shall be fully executed and notarized.

Add the following Paragraphs:

9.3.4 Until Closeout Documents have been received and outstanding items completed the Owner will pay 95% (ninety-five percent) of the amount due the Contractor on account of progress payments.

9.3.5 The Contractor shall provide a current and updated Progress Schedule to the Architect with each Application for Payment. Failure to provide Schedule will be just cause for rejection of Application for Payment.

9.5 DECISIONS TO WITHHOLD CERTIFICATION

Add the following to 9.5.1:

.8 failure to provide a current Progress Schedule;
.9 a lien or attachment is filed;
.10 failure to comply with mandatory requirements for maintaining Record Documents.

9.6 PROGRESS PAYMENTS

Delete Paragraph 9.6.1 in its entirety and replace with the following:

9.6.1 After the Architect and the Construction Manager have approved and issued a Certificate for Payment, payment shall be made by the Owner within 30 days after Owner's receipt of the Certificate for Payment.

9.7 FAILURE OF PAYMENT

In first sentence, strike the first reference to "seven" and insert "thirty (30)". Also strike "binding dispute resolution" and insert "remedies at law or in equity".

9.8 SUBSTANTIAL COMPLETION

9.8.5 In the second sentence, strike "shall" and insert "may".

ARTICLE 10: PROTECTION OF PERSONS AND PROPERTY

10.1 SAFETY PRECAUTIONS AND PROGRAMS

Add the following Paragraphs:

10.1.1 Each Contractor shall develop a safety program in accordance with the Occupational Safety and Health Act of 1970. A copy of said plan shall be furnished to the Owner and Architect prior to the commencement of that Contractor's Work.

10.1.2 Each Contractor shall appoint a Safety Representative. Safety Representatives shall be someone who is on site on a full time basis. If deemed necessary by the Owner or Architect, Contractor Safety meetings will be scheduled. The attendance of all Safety Representatives will be required. Minutes will be recorded of said meetings by the Contractor and will be distributed to all parties as well as posted in all job offices/trailers etc.

10.2 SAFETY OF PERSONS AND PROPERTY

Add the following Paragraph:

10.2.4.1 As required in the Hazardous Chemical Act of June 1984, all vendors supplying any material that may be defined as hazardous must provide Material Safety Data Sheets for those products. Any chemical product should be considered hazardous if it has a caution warning on the label relating to a potential physical or health hazard, if it is known to be present in the work place, and if employees may be exposed under normal conditions or in foreseeable emergency situations. Material Safety Data Sheets shall be provided directly to the Owner, along with the shipping slips that include those products.

10.3 HAZARDOUS MATERIALS

Delete Paragraph 10.3.3 in its entirety.

Delete Paragraphs 10.3.6 in its entirety.

ARTICLE 11: INSURANCE AND BONDS

11.1 CONTRACTOR'S LIABILITY INSURANCE

11.1.4 Strike "the Owner" immediately following "(1)" and strike "and (2) the Owner as an additional insured for claims caused in whole or in part by the Contractor's negligent acts or omissions during the Contractor's completed operations."

11.2 OWNER'S LIABILITY INSURANCE

Delete Paragraph 11.2 in its entirety.

11.3 PROPERTY INSURANCE

Delete Paragraph 11.3 and its subparagraphs in their entirety and replace with the following:

11.3 The Owner will not provide Builder's All Risk Insurance for the Project. The Contractor and all Subcontractors shall provide property coverage for their tools and equipment, as necessary. Any mandatory deductible required by the Contractor's Insurance shall be the responsibility of the Contractor.

11.4 PERFORMANCE BOND AND PAYMENT BOND

11.4.1 Add the following sentence: "The bonds will conform to those forms approved by the Office of Management and Budget."

ARTICLE 12: UNCOVERING AND CORRECTION OF WORK

12.2.2 AFTER SUBSTANTIAL COMPLETION

Add the following Paragraph:

12.2.2.1.1 At any time during the progress of the Work, or in any case where the nature of the defects will be such that it is not expedient to have corrected, the Owner, at its option, will have the right to deduct such sum, or sums, of money from the amount of the Contract as it considers justified to adjust the difference in value between the defective work and that required under contract including any damage to the structure.

12.2.2.2 Strike "one" and insert "two".

12.2.2.3 Strike "one" and insert "two".

12.2.5 In second sentence, strike "one" and insert "two".

ARTICLE 13: MISCELLANEOUS PROVISIONS

13.1 GOVERNING LAW

Strike "except that, if the parties have selected arbitration as the method of binding dispute resolution, the Federal Arbitration Act shall govern Section 15.4."

Insert "except that, if the parties have selected arbitration as the method of dispute resolution, the Delaware Arbitration Act, 10 Del. C. §5701, shall govern Section 15.4."

13.6 INTEREST

Strike "the date payment is due at such rate as the parties may agree upon in writing or, in the absence thereof, at the legal rate prevailing from time to time at the place where the Project is located." Insert "30 days of presentment of the authorized Certificate of Payment at the annual rate of 12% or 1% per month.

13.7 TIME LIMITS ON CLAIMS

Strike the last sentence.

Add the following Paragraph:

13.8 CONFLICTS WITH FEDERAL STATUTES OR REGULATIONS

13.8.1 If any provision, specifications or requirement of the Contract Documents conflict or is inconsistent with any statute, law or regulation of the government of the United State of America, the Contractor shall notify the Architect and Owner immediately upon discovery.

ARTICLE 14: TERMINATION OR SUSPENSION OF THE CONTRACT

14.4 TERMINATION BY THE OWNER FOR CONVENIENCE

Delete Paragraph 14.4.3 in its entirety and replace with the following:

14.4.3 In case of such termination for the Owner's convenience, the Contractor shall be entitled to receive payment for Work executed, and cost incurred by reason of such termination along with reasonable overhead.

ARTICLE 15: CLAIMS AND DISPUTES

15.1.6 CLAIMS FOR CONSEQUENTIAL DAMAGES

Delete Paragraph 15.1.6 and its subparagraphs in their entirety.

15.2 INITIAL DECISION

Delete Paragraph 15.2.5 in its entirety and replace with the following:

15.2.5 The Architect will approve or reject Claims by written decision, which shall state the reasons therefore and shall notify the parties of any change in the Contract Sum or Contract Time or both. The approval or rejection of a Claim by the Architect shall be subject to mediation and other remedies at law or in equity.

Delete Paragraph 15.2.6 and its subparagraphs in their entirety.

15.3 MEDIATION

15.3.1 Strike "binding dispute resolution" and insert "any or all remedies at law or in equity".

15.3.2 In the first sentence, delete "administered by the American Arbitration Association in accordance with its Construction Industry Mediation Procedure in effect on the date of the Agreement,". Also strike "binding dispute resolution" and insert "remedies at law and in equity".

15.4 ARBITRATION

Delete Paragraph 15.4 and its subparagraphs in their entirety.

END OF SUPPLEMENTARY GENERAL CONDITIONS

SECTION 007343 – WAGE RATE REQUIREMENTS

1. SUMMARY

1.1. In accordance with Delaware Code, Title 29, Chapter 69, Section 6912, all laborers and mechanics of the Contractor and all subcontractors employed to perform work directly upon the site of the work shall be paid unconditionally and not less often than once a week and without subsequent deduction or rebate on any account the full amounts accrued at the time of payment computed at wage rates not less than those determined by the Division of Industrial Affairs, Department of Labor, State of Delaware, as the prevailing rates in this area.

1.2 This approved scale of wages must be posted by the Contractor in a prominent and easily accessible place at the site of the work.

1.3 It is further stipulated that there may be withheld from the Contractor such accrued payment as may be considered necessary by the contracting officer to pay laborers and mechanics employed by the Contractor or any subcontractors on the work the difference between the rates of wages required and the rate of wages received by such laborers and mechanics and not refunded to the Contractor, subcontractor or their agents.

1.4 Where wage rates are published in this Manual they are issued by the State Department of Labor on the date indicated and are included for the convenience of Bidders. The Owner, the Architect, and the Construction Manager, accept no responsibility for the accuracy or applicability of any rates included herein. The actual wage rate determinations which will apply to the work will be those in effect on the first day of public advertisement for bids as determined by the State Department of Labor. It will be the responsibility of each bidder to contact the State Department of Labor and to incorporate these rates in his bid.

1.5 "In accordance with Delaware Code, Title 29, Section 6912, as amended July 5, 1994, contractors shall furnish sworn payroll information to the Department of Labor on a weekly basis for each contract which exceeds $15,000 for renovation work and $100,000 for new construction. The construction contract amount is based on a cumulative total of all contracts bid for a specific project. Payroll forms for submission may be obtained from the Department of Labor."

1.5.1 A Payroll Report, available from the Department of Labor is to be used to provide this information.

1.6 A copy of the Prevailing Wages for the project is attached hereto.

END OF SECTION

STATE OF DELAWARE
DEPARTMENT OF LABOR
DIVISION OF INDUSTRIAL AFFAIRS
OFFICE OF LABOR LAW ENFORCEMENT
PHONE: (302) 451-3423

Mailing Address:
225 CORPORATE BOULEVARD
SUITE 104
NEWARK, DE 19702

Located at:
225 CORPORATE BOULEVARD
SUITE 104
NEWARK, DE 19702

PREVAILING WAGES FOR **BUILDING CONSTRUCTION** EFFECTIVE MARCH 13, 2015

CLASSIFICATION	NEW CASTLE	KENT	SUSSEX
ASBESTOS WORKERS	21.87	26.94	39.20
BOILERMAKERS	39.67	33.22	48.83
BRICKLAYERS	49.39	49.39	49.39
CARPENTERS	51.86	51.86	41.22
CEMENT FINISHERS	69.27	29.11	21.20
ELECTRICAL LINE WORKERS	43.49	37.29	28.44
ELECTRICIANS	63.60	63.60	37.29
ELEVATOR CONSTRUCTORS	80.31	40.93	30.55
GLAZIERS	67.35	67.35	20.15
INSULATORS	53.38	53.38	53.38
IRON WORKERS	60.12	60.12	60.12
LABORERS	40.95	40.95	40.95
MILLWRIGHTS	47.47	65.23	51.80
PAINTERS	43.04	44.94	44.94
PILEDRIVERS	71.17	37.64	30.45
PLASTERERS	21.60	28.55	17.50
PLUMBERS/PIPEFITTERS/STEAMFITTERS	62.20	36.66	54.49
POWER EQUIPMENT OPERATORS	43.88	58.31	24.13
ROOFERS-COMPOSITION	21.82	20.45	17.63
ROOFERS-SHINGLE/SLATE/TILE	17.59	13.72	14.10
SHEET METAL WORKERS	47.05	64.16	64.16
SOFT FLOOR LAYERS	48.57	48.57	48.57
SPRINKLER FITTERS	53.52	53.52	53.52
TERRAZZO/MARBLE/TILE FNRS	54.11	52.50	45.45
TERRAZZO/MARBLE/TILE STRS	62.13	60.28	52.63
TRUCK DRIVERS	24.43	26.64	20.03

CERTIFIED: 3/16/15

BY: _____
ADMINISTRATOR, OFFICE OF LABOR LAW ENFORCEMENT

NOTE: THESE RATES ARE PROMULGATED AND ENFORCED PURSUANT TO THE PREVAILING WAGE REGULATIONS ADOPTED BY THE DEPARTMENT OF LABOR ON APRIL 3, 1992.

CLASSIFICATIONS OF WORKERS ARE DETERMINED BY THE DEPARTMENT OF LABOR. FOR ASSISTANCE IN CLASSIFYING WORKERS, OR FOR A COPY OF THE REGULATIONS OR CLASSIFICATIONS, PHONE (302) 451-3423.

NON-REGISTERED APPRENTICES MUST BE PAID THE MECHANIC'S RATE.

PROJECT: Georgetown Elementary School Classroom and Kitchen Additions, Sussex County

SECTION 012100 - ALLOWANCES

1. RELATED DOCUMENTS

1.1 The general provisions of the Contract, including the Conditions of the Contract (General, Supplementary and other Conditions, if any) and Division 1 as appropriate, apply to the Work specified in this Section.

1.2 Refer to provisions in AIA Document A232 – 2009 EDITION, GENERAL CONDITIONS OF THE CONTRACT FOR CONSTRUCTION, CONSTRUCTION MANAGER AS ADVISOR EDITION, for requirements in addition to those specified in Division 1.

1.3 Refer to Scope Information Sheets for all contracts bound in the Project Manual under Section 011100 - SUMMARY OF WORK. The Scope Information Sheets describe generally the work included in each contract, but the work is not necessarily limited to that described.

1.4 For work being constructed under separate prime contracts, provisions of this Section apply to each contract being bid.

1.5 Include in the Contract Sum all lump sum and unit cost allowances stated in the Contract Documents.

1.6 Designate in the construction progress schedule the delivery dates for products specified under each allowance.

1.7 Designate in the Schedule of Values the quantities of materials required under each unit cost allowance.

2. ALLOWANCES FOR PRODUCTS

2.1 The amount of each allowance includes:

A. The cost of the product or labor to the Contractor or Subcontractor, less any applicable trade discounts.

B. Delivery to the site.

C. Labor required under the allowance, only when labor in specified to be included in the allowance. If labor is not specified to be included in the allowance, it shall be included in the Contractor's bid and in the resulting Contract Sum.

D. Applicable taxes.

E. Profit and overhead.

2.2 In addition to the amount of each allowance, include in the Contract Sum the Contractor's costs for:

A. Handling at the site; including unloading, uncrating and storage.

B. Protection from the elements and from damage.

C. Labor for installation and finishing, except where labor is specified to be a part of the allowance.

D. Other expenses required to complete the installation.

E. Contractor's and Subcontractor's overhead and profit.

2.3 Refer to Scope Information Sheets under Section 011100 - SUMMARY OF WORK for the amount of each lump sum allowance and for work specified in the specification sections listed below.

A. Section 02072: Provide labor under direction of CM.

3. ADJUSTMENT OF COSTS

3.1 Should the net cost be more or less than the specified amount of the allowance, the Contract Sum will be adjusted accordingly by Change Order.

A. For products and labor specified under a unit cost allowance, the unit cost shall apply to the quantities actually used with a nominal allowance for waste, as determined by receipted invoices, or by field measurement.

3.2 At Contract closeout, reflect all approved changes in Contract amounts in the final statement of accounting.

END OF SECTION

SECTION 012200 - UNIT PRICES

1. GENERAL PROVISIONS

1.1 The general provision of the Contract, including the Conditions of the Contract (General, Supplementary and other conditions, if any) and Division 1 as appropriate, apply to the Work specified in this Section.

1.2 Refer to provisions in AIA Document A232 – 2009 EDITION, GENERAL CONDITIONS OF THE CONTRACT FOR CONSTRUCTION, CONSTRUCTION MANAGER AS ADVISOR EDITION, for requirements in addition to those specified in Division 1.

1.3 For work being constructed under separate prime contract, provisions of this Section apply to each contract being bid.

2. BASE BID

2.1 The Base Bid shall consist of all work shown or specified in the Contract Documents, exclusive of any Additive Unit Prices specified herein.

.2.2 The Base Bid shall include all work in any Subtractive Unit Prices specified herein.

3. UNIT PRICES

3.1 State in the Bid Form the amount to be added to (or subtracted from) the Base Bid per unit of measurement for each Unit Price specified. State this amount to include all overhead and profit. No surcharge in addition to the Unit Price listed will be permitted.

3.2 See Section 002113, INSTRUCTIONS TO BIDDERS for related information.

3.3 For description of Unit Prices requested, refer to the specification. The method of stating the Unit Prices is described in the Bid Form.

3.4 Where both add and deduct unit prices are requested, there shall not be more that a 10% variation between the two

4. APPLICATION OF UNIT PRICES

4.1 Unit prices stated in the Bid Form will apply from the time the Bid is submitted until Contract completion.

5. MEASUREMENT OF QUANTITIES

5.1 Quantities shall be determined by field measurement by contractor personnel and as verified by the Construction Manager.

5.2 At the Contractor's option, and at his expense, measurement may be made by a registered surveyor.

6. LIST AND DESCRIPTION OF UNIT PRICES

A. Unit Price No. 1: Removal of unsatisfactory soil and replacement and installation of satisfactory soil material.

1. Description: Unsatisfactory soil excavation and disposal off site and replacement with satisfactory fill material or engineered fill from off site, as required, according to Section 312000 "Earth Moving."
2. Unit of Measurement: Cubic yard of soil excavated, based on survey of volume removed.

B. Unit Price No. 2: Full depth pavement patch.

1. Description: Saw cutting and removal of complete pavement section and unsuitable subsoils in the areas of pavement above and beyond the base bid as shown on the contract documents. Complete replacement and installation of pavement section in accordance with the "On-Site Pavement Section" detail provided on sheet C-902 of the contract documents.
2. Unit of Measurement: Square foot of pavement area, based on survey of area removed.

C. Unit Price No. 3: 2" Mill and overlay.

1. Description: Additional 2" milling of existing pavement by contactor and installation of a 2" overlay above and beyond the base bid as shown on the contract documents.
2. Unit of Measurement: square foot of area to be milled, based on survey of area removed.

D. Unit Price No. 4: Seal Coating Pavement area.

1. Description: Additional seal coating of parking surfaces and marking in addition to the area specified by the Alternate no. 2.
2. Unit of Measurement: Square foot.

END OF SECTION

SECTION 012300 - ALTERNATES

1. GENERAL PROVISIONS

1.1 The general provisions of the Contract, including the Conditions of the Contract (General, Supplementary and other conditions, if any) and Division 1 as appropriate, apply to the Work specified in this Section.

1.2 Refer to provisions in AIA Document A232 – 2009 Edition, GENERAL CONDITIONS OF THE CONTRACT FOR CONSTRUCTION, CONSTRUCTION MANAGER AS ADVISOR EDITION, for requirements in addition to those specified in Division 1.

1.3 For work being constructed under separate prime contracts, provisions of this Section apply to each contract being bid.

2. BASE BID

2.1 The Base Bid shall consist of all work shown or specified in the Contract Documents, exclusive of any Additive Alternates specified herein.

2.2 The Base Bid shall include all work in any Subtractive Alternates specified herein.

3. ALTERNATES

3.1 State in the Bid Form the amount to be added to the Base Bid for each Alternate specified.

3.2 See Section 002113 - INSTRUCTIONS TO BIDDERS for related information.

3.3 The description of Alternates contained herein is in summary form. Detailed requirements for materials and execution shall be as specified in other sections and as shown on drawings.

A. Alternate No. 1: Additional striping of the front parking lot.

1. Base Bid: Removal of striping in the existing northeast parking lot adjacent to the classroom additions according to Sheet C-101 of the contract documents. Striping of 18 parking spaces and pavement markings as shown on sheet C-201 of the contract documents.
2. Alternate: Remove the remaining existing striping within the existing northeast parking lot adjacent to the classroom additions on sheet C-202 of the contract documents. Additional restriping of the spaces and pavement marking within the existing northeast parking lot as shown on sheet C-202 of the contract documents and not included in the base bid on sheet C-201 of the contract documents.

B. Alternate No. 2: Seal coat front parking lot.

1. Base Bid: Removal of striping in the existing northeast parking lot adjacent to the classroom additions according to Sheet C-101 of the contract documents. Striping of 18 parking spaces and pavement markings as shown on sheet C-201 of the contract documents.
2. Alternate: Seal coating 46,610 sqft of the existing northeast parking lot as shown on sheet C-202 of the contract documents. Additional restriping of the spaces and pavement marking within the existing northeast parking lot as shown on sheet C-202 of the contract documents and not included in the base bid on sheet C-201 of the contract documents.

C. Alternate No. 3: Mill and overlay front parking lot

1. Base Bid: Removal of striping in the existing northeast parking lot adjacent to the classroom additions according to Sheet C-101 of the contract documents. Striping of 18 parking spaces and pavement markings as shown on sheet C-201 of the contract documents.
2. Alternate: Sawcut and rotomill 46,610 sqft of the existing northeast parking lot as shown on sheet C-202 of the contract documents. Additional restriping of the spaces and pavement marking within the existing northeast parking lot as shown on sheet C-202 of the contract documents and not included in the base bid on sheet C-201 of the contract documents.

D. Alternate No. 4: Multipurpose Room Finishes

1. Base Bid: At Multipurpose Room #132, existing finish flooring remain; patch and replace tiles at removed serving lines; and walls repainted, as indicated on Sheet.
2. Alternate: In lieu of base bid, provide new finish flooring and wall finishes as indicated on Sheets A107 and A601.

E. Alternate No. 5: Existing Stair Tread/Riser and Landing.

3. Base Bid: At Stair 127/218, repaint existing stair risers and VCT on treads and landing remains, as indicated on Sheet A103.
4. Alternate: In lieu of base bid, remove VCT at landing and provide rubber tile, and provide new rubber stair tread with integral risers as indicated on Sheet A103 and Section 096513.

END OF SECTION

SECTION 012600 - CHANGE ORDER PROCEDURES

1. GENERAL:

1.1 The general provisions of the Contract, including the Conditions of the Contract (General, Supplementary and other Conditions, if any) and Division 1 as appropriate, apply to the Work specified in this Section.

1.2 Refer to provisions in AIA Document A232 – 2009 EDITION, GENERAL CONDITIONS OF THE CONTRACT FOR CONSTRUCTION, CONSTRUCTION MANAGER AS ADVISOR EDITION, for requirements in addition to those specified in Division 1.

1.3 The Construction Manager is responsible for processing all change orders. Each request will be assigned a change order request (COR) number. The Change Order Request & Execution Form will be initiated via the web-based project management system (Building Blok) used by the CM.

1.4 It is to be clearly understood that no extra work shall commence without an approved written and executed change order from the Owner.

2. INITIATING A CHANGE ORDER:

2.1 Specific changes initiated by the Owner, Architect, Construction Manager (CM) or Contractor will be processed as follows:

A. The Owner will authorize the Architect to prepare sufficient documents to establish an accurate price. These documents to be forwarded to the Construction Manager and Owner "for pricing only, not authorized for construction." The Construction Manager will develop the estimate (within 2 weeks) showing a breakdown by trades with all trade contractor quotes. The Owner will approve or reject the change request within two (2) weeks. If the Owner elects to proceed with the change, the Construction Manager will prepare formal change orders to the various trade contractors involved in the change and reference in all formal change orders the original change order request number.

B. Field Change: Contractor shall immediately notify the Construction Manager of a change due to field conditions or site conditions. If documents cannot be prepared for pricing due to schedule constraints, the Construction Manager will make every effort in estimating the field change. If the Owner and Construction Manager agree that certain field changes should be handled on a time and material basis, the Construction Manager will closely monitor the Contractor's labor and material affecting this change. At the completion of the work a formal change order will be issued.

C. Contractor Change: If a Contractor initiates a change order for work not included in the Contract, the Construction Manager and Architect will research the validity of the request, verify quantities and pricing and submit to the Owner for approval on a change order request.

2.2 The additional cost, or credit to the Owner resulting from a change in the Work shall be by mutual agreement of the Owner, Contractor, Construction Manager and the Architect.

3. PROCESSING A CHANGE ORDER:

3.1 The Contractor will fill in the Change Order Request & Execution Form (COREF) with a brief description of the change, any time extension, and cost changes.

3.2 The Contractor will attach to the COREF copies of the written quotations from the trade contractors, Contractors, and suppliers. The Labor Detail Sheet and the Change Order Detail forms must be added as an attachment to the COREF. The Contractor and each sub-tier contractor (as applicable) must fill out the Labor Detail Sheet and Change Order Detail Sheet. Samples of these forms are attached.

3.3 In all cases, this cost or credit shall be based on the "DPE" wages required and the "invoice price" of the materials/equipment needed.

3.4 "DPE" shall be defined to mean "direct personnel expense". Direct payroll expense includes direct salary plus customary fringe benefits (prevailing wage rates) and documented statutory costs such as workman's compensation insurance, FICA, and unemployment insurance.

A. "Fringe Benefit" is any medical, life or disability insurance, paid time off, etc.

B. "Worker's Compensation" is the insurance required for injuries including medical leave, etc.

C. "FICA" is the costs association with Social Security and Medicare insurance.

D. "Unemployment insurance" is the cost associated with the governmental assessment for employee's unemployment benefits.

3.5 "Invoice price" of materials/equipment shall be defined to mean the actual cost of materials and/or equipment that is paid by the Contractor (or Subcontractor) to a material distributor, direct factory vendor, store, material provider, or equipment leasing entity.

3.6 In addition to the above, the Contractor is allowed markup for overhead and profit on additional work performed as outlined in Specification Section 012613, Contractor Compensation.

3.7 Building Blok Procedures: The Contractor will submit all change order requests and supporting documentation via the Building Blok web-based project management system. Each Contractor will be issued a unique login and password. Each contractor must submit the information as follows:

A. Create a new change order, from your "To-Do List" by clicking on the "Create Issue" tab in the upper right corner and select "Change Order Request".

B. The Contractor will enter a brief description of the change in the "Summary" block. A detailed description of the change will be entered in the "Description of Change" block, to include any changes to documents or time extension. The cost of the change will be entered in the "Total Cost Change" block.

C. The Labor Detail Sheet and the Change Order Detail forms must be added as an attachment to the request. The Contractor and each sub-tier contractor (as applicable) must fill out the Labor Detail Sheet and Change Order Detail Sheet. Samples of these forms are included behind this section. In addition to these forms, the Contractor also must attach any material and equipment rental quotations. All of these documents should be scanned and saved as a PDF file. Click on the "Browse" box to upload the file. Be sure to wait until Building Blok tells you the file was "Uploaded Successfully".

D. Once the information is entered on the form and the proper attachments are uploaded, the contractor will click "Save". The Contractor will be prompted to enter their password to approve an electronic signature. Once you save the request you will have an opportunity to check it before submitting it to the CM. After you verify the COREF is correct click "Recommend Approval" to submit the change request to the CM. The Contractor will then be prompted to re-enter the password to approve an electronic signature and complete the submission request. Click on "Home" in the upper left corner to make sure the change order does not appear on your To-Do List.

E. The Change Order Request will then be reviewed by the CM Project Manager and Recommended for Approval, Rejected, or returned to the Contractor for additional information. Once the Construction Manager, Owner, and Architect have approved the request all parties will receive an email from Building Blok notifying them that a fully executed Change Order and Contract Recalculation Form can be downloaded from Building Blok. Hard copies of the executed change order and recalculation form will not be provided by the CM.

It is to be clearly stated that no extra work shall commence without an approval from the **Owner or Construction Manager** or Owner's representative.

END OF SECTION

CHANGE ORDER REQUEST & EXECUTION FORM

110 South Poplar Street
Suite 400
Wilmington, DE 19801

Tel. 302-421-5700
Fax 302-421-5715

DATE:	PROJECT NAME:
CONTRACT:	REQUEST NUMBER:
CONTRACTOR:	CHANGE ORDER NUMBER:
	STATE PO NUMBER:

The following is a summary of the request submitted by the contractor as described above. All supporting documents have been attached and described herewith. This summary shall contain a total amount of compensation requested by the contractor as well as any request for an extension in contract time. It shall be understood that the amounts described below shall remain valid for a period of sixty days from the date described above unless otherwise stated.

A detailed breakdown of Labor, material, equipment, and subcontract costs must be attached to be considered for review.

1. Summary Description(s):
2. Changes to the Contract Drawings:
3. Changes to the Project Manual:
4. Total Cost Change:
5. Total Time Change:

REVIEWED

This request has been reviewed and____approval_____disapproval is recommended by:

Name Title Date

APPROVED

This change order request is not approved until executed by all parties bound by a contractual relationship. Upon execution it shall represent a modification to the agreement and is subject to all terms and conditions of the contract documents.

Contractor:	Architect:
Signed By:	Signed By:
Title:	Title:
Date:	Date:
EDiS Company	Owner:
Signed By:	Signed By:
Title:	Title:
Date:	Date:

CHANGE ORDER DETAIL FORM

(Provided by contractor, subcontractor or sub tier contractor)

DATE SUBMITTED:

CONTRACT:

CONTRACTOR:

PROJECT NAME:

CHANGE ORDER REQUEST #:

LABOR SECTION

TRADESMAN(s):	LABOR HOURS	RATE (per schedule)	SUBTOTAL
Subtotal			

MATERIAL SECTION

MATERIAL:	QUANTITY	UNIT COST	SUBTOTAL
Subtotal			

EQUIPMENT SECTION

EQUIPMENT:	QUANTITY	UNIT COST	SUBTOTAL
Subtotal			

SUBTOTAL	
SUBCONTRACTOR/ SUB TIER*	
OH & PROFIT (7.5% on sub/sub tier only))	
BOND COST	
OH & PROFIT (15% on own work)	
GRAND TOTAL	

3/2012

LABOR DETAIL FORM

(Provided by contractor, subcontractor, or sub-tier contractor)

DATE:

CONTRACT:

CONTRACTOR:

PROJECT NAME:

CHANGE ORDER REQUEST #:

CLASSIFICATION:			
Base Wage Rate:			
Health Insurance			
Holidays			
Sick Days			
Life Insurance			
Disability Insurance			
Dental Insurance			
Company Vehicle			
401K			
Education			
Other (*specify below*)			
Subtotal			
Posted Prevailing Rate			
FICA (Social Security & Medicare)			
SUTA (State Unemployment)			
FUTA (Federal Unemployment)			
General Liability Insurance			
Worker's Compensation			
Total Wage Rate			

3/2012

SECTION 012613 - CONTRACTOR COMPENSATION

1. GENERAL

1.1 The Contractor agrees to perform any additional Work, for the net cost of materials and labor (including wages paid, payroll taxes, and all insurance) plus the following percentage for all of his overhead and profit, which includes Field Supervision:

The percentages to be added or allowed for any Work change involving both added Work and omitted Work shall be applied only to the net difference in cost.

(a) 15% mark-up (10% overhead and 5% profit) by the Contractor on Work performed by his own forces.

(b) For work done by a Subcontractor, 10% for subcontractor overhead and 5% for subcontractor profit to which the Contractor may add 7.5% for his overhead and profit combined.

(c) Contractor mark-up shall include supervision, home and field overhead, all self-owned small tools and equipment.

1.2 When the Contractor is directed to perform overtime work at the CM (Owner) expense to accelerate contractual work, the cost for same shall only be the actual premium costs incurred by the Contractor.

END OF SECTION

SECTION 012900 - PAYMENT PROCEDURES

1. GENERAL PROVISIONS

1.1 The general provisions of the Contract, including the Conditions of the Contract (General, Supplementary and other conditions, if any) and Division 1 as appropriate, apply to the Work specified in this Section.

1.2 Refer to provisions in AIA Document A232 - 2009 Edition, GENERAL CONDITIONS OF THE CONTRACT FOR CONSTRUCTION, CONSTRUCTION MANAGER AS ADVISOR EDITION, for requirements in addition to those specified in Division 1.

1.3 For work being constructed under separate prime contracts, provisions of this Section apply to each contract being bid.

2. REQUIREMENTS INCLUDED

2.1 Submit Applications for Payment to Construction Manager in accordance with the schedule and procedures established in the Contract Documents.

3. RELATED REQUIREMENTS

3.1 Owner-Contractor Agreement.

3.2 Conditions of the Contract: Article 9 PAYMENTS AND COMPLETION.

3.3 Section 01 31 13: Project Coordination Meetings

3.4 Section 01 33 00: Submittal Procedures

3.5 Section 01 77 00: Closeout Procedures

4. FORMAT AND DATA REQUIRED

4.1 Submit itemized applications typed on AIA Document G702/CMa, Application and Certificate for Payment, and Continuation Sheet G703, examples of which will be furnished to the Contractor at the Pre-Construction meeting.

4.2 Provide itemized data on Continuation Sheet:

1. Format, schedules, line items and values: Duplicates of those of the schedule of values previously accepted by the Construction Manager.

5. PREPARATION OF APPLICATIONS FOR PROGRESS PAYMENTS

5.1 Form: AIA Document G702/CMa

1. Fill in required information, including that for Change Orders executed prior to date of submittal of application.

2. Fill in summary of dollar values to agree with respective totals indicated on Continuation Sheets.

5.2 Continuation Sheets:

1. Line items of components of Work will be subject to Owner's review and approval under the Provisions of Section 013300 - SUBMITTALS, and the General Conditions. Continuation Sheets shall follow Schedule of Values submitted at the start of the job.

2. Fill in total list of all scheduled components of Work, with item number and scheduled dollar value for each item. Fill in values of work completed in the period.

3. Fill in dollar value in each column for each scheduled line item when work has been performed or products stored; round off values to nearest dollar.

4. List each Change Order executed prior to date of submission, at the end of the Continuation Sheets; list by Change Order Number, and description, as for an original component item of work.

5. Contractor is to include a line item for "Closeout Documents" equaling 3.5% of their contract value.

6. PREPARATION OF APPLICATION FOR FINAL PAYMENT

6.1 Fill in Application form as specified in progress payments.

7. SUBMITTAL PROCEDURES

7.1 Complete Invoice:

1. Submit completed Application to the Construction Manager by the date stipulated in the Project Manual.

7.2 Number: Submit 3 copies of each invoice.

END OF SECTION

SECTION 013113 - PROJECT COORDINATION MEETING

1. PROJECT COORDINATION MEETING

   1.1 An on-site project coordination meeting will be held on a biweekly basis throughout the project construction period.

2. ATTENDANCE

   2.1 Attendance at the project coordination meeting is mandatory of each Contractor or major supplier on the project.

   2.2 The representative of the Contractor shall be the Project Manager and field superintendent, unless a substitute representative has been approved by the Construction Manager.

   2.3 Contractor will begin attending the Project Coordination Meetings at least 4 weeks prior to mobilization on site, and will continue until the Contractor has fulfilled the obligations of his Contract.

3. AGENDA

   3.1 The Construction Manager will set the agenda for the biweekly Project Coordination Meeting.

   3.2 At a minimum, the Contractor shall be prepared to discuss the following:

      1. Actual vs. as planned progress for the prior two week period.

      2. Planned construction activities for the next four weeks.

      3. Contract document clarifications.

      4. Coordination items with other contractors.

      5. Quality Control.

      6. Recently issued change orders.

      7. Potential change orders.

      8. Submittals and shop drawings.

      9. Other items requiring Construction Manager's attention.

END OF SECTION

SECTION 013119 – PRE-INSTALLATION MEETINGS

1. PRE-INSTALLATION MEETINGS

1.1 An on-site pre-installation meeting will be held at least two weeks prior to commencement of installation of work.

2. ATTENDANCE

2.1 Attendance at the pre-installation meeting is mandatory of each Contractor and/or major supplier as required for each specific meeting listed below.

2.2 The following individuals shall attend these meetings:
- Contractors' Project Manager
- Contractors' Field Superintendent
- Contractors' Safety Representative (as needed)
- Key Subcontractors, Suppliers, and Vendors
- EDiS Project Manager
- EDiS Field Manager
- EDiS Safety Director (as needed)
- EDiS MEP Specialist (as needed)
- Owner's Representative (as needed)
- Architect/Engineer (as needed)
- Governmental Agency Representatives (as needed)
- Testing/Inspection Agency Representatives (as needed)
- Utility Company Representatives (as needed)

3. SUBMITTALS

3.1 Each contractor is responsible to have all submittals and mock-ups, as related to the pre-installation meeting scope of work, submitted and approved prior to commencement of the pre-installation meeting.

4. LIST OF REQUIRED MEETINGS

- Sitework
  - Erosion and Sediment Controls
  - Del Dot
- Foundations & Concrete Slabs
- Underslab Utilities
- Roofing
- Building Envelope
- Finishes
- MEP Coordination

5. AGENDA

3.1 At a minimum, the Contractor shall be prepared to discuss the items as listed on the agenda template shown on the following page:

PROJECT: _____

PRE-INSTALLATION MEETING : (Insert Phase of Work)

A. ATTENDEES:

NAME	COMPANY	WORK ITEM	CONTRACT

B. TESTING & INSPECTION REQUIREMENTS ***(THESE REQUIREMENTS COME FROM THE PROJECT MANUAL)***

C. REVIEW CONTRACT DRAWINGS AND SPECIFICATIONS

Drawing / Spec No.	Comments / Conflicts

D. REVIEW SCOPES OF WORK ***(SEE SECTION 011100 IN THE PROJECT MANUAL)***

E. REVIEW RELEVANT RFI'S

F. REVIEW SUBMITTALS ***(SEE THE SUBMITTAL REGISTER)***

G. REVIEW MATERIALS AND DELIVERIES

H. REVIEW SCHEDULE AND SEQUENCE OF WORK

I. JOB SITE SAFETY ***(SEE THE CONTRACTOR'S SAFETY PROGRAM OR OSHA)***

- Safety Plans must be submitted before the start of work
- Certificates of Insurance need to be submitted before the start of work
- Minimum PPE – Hardhats, steel toe boots, safety glasses
- Lock-out, Tag, Test and Try ALL utilities is critical before the start of demolition
- Signage & HAZCOM Requirements
- Potential Hazards
    - Excavations >4 ft
    - Slips/trips/falls
    - Existing utilities to remain and protected
    - Overhead debris
    - Power tools
    - Heavy equipment

J. COORDINATION WITH OTHER TRADES

K. ACTION ITEMS AND RESPONSIBILITY

END OF SECTION

SECTION 013125– WEB-BASED PROJECT MANAGEMENT SYSTEM

1. GENERAL PROVISIONS

1.1 The general provisions of the Contract, including the Conditions of the Contract (General, Supplementary and other Conditions, if any) and Division 1 as appropriate, apply to the Work specified in this Section.

1.2 Refer to provisions in AIA Document A201 – 2007 EDITION, GENERAL CONDITIONS OF THE CONTRACT FOR CONSTRUCTION, for requirements in addition to those specified in Division 1.

1.3 Refer to Scope Information Sheets for all contracts bound in the Project Manual under Section 011100 - SUMMARY OF WORK. The Scope Information Sheets describe generally the work included in each contract, but the work is not necessarily limited to that described.

1.4 All Contractors shall use Internet/Web-based project management software to transmit documents, track, and otherwise manage this project.

1.5 Use of this project management software will not change any contractual responsibilities of the construction team members.

2. DEFINITIONS

2.1 System: A real time web-based software that shares data, translates data, organizes data, facilitates communication, archives actions, and offers scheduling prompts to identified Users.

2.2 Users: Authorized participants of this project furnished with a unique password and authorized to access the system to view/input/export data. Owner, Construction Manager, Architect, and the Contractors are all Users. Other Users may be added as necessary.

2.3 Contacts: Entities identified to automatically receive specific transmissions or entities selected to receive specific information sent by the system through to an e-mail address.

2.4 Signees: Those individuals identified, by the Contractors, authorized to sign change orders and payment applications via electronic signature. This electronic signature is as contractually binding as an original signature on paper.

3. USE OF SYSTEM

3.1 The use of the system is mandatory for the documentation of the transmittal of all non-oral information, even if the actual transmission of the information is by another means.

3.2 The use of the system will be mandatory by the Contractors to send, retrieve, and respond to data.

3.3 In addition to this web-based project management system, the Contractors will be required to use

electronic mail (email) for day-to-day communication and correspondence. Email will be the primary means of transmitting written communication (i.e. meeting minutes, draft pay applications, etc.).

4. QUALITY ASSURANCE

4.1 A three hour training session in the use of the software for this project will be offered by the Construction Manager at a location convenient to the project site. Attendance by one member of each Contractor's organization is mandatory. Additional attendees may enroll based on availability of training space. All attendees must have a working knowledge of computers. Training can not begin until three working days after the receipt of the submittals indicated below.

4.2 Technical assistance will be provided by on-line help, email, or telephone for all Users throughout the life of the project.

5. SUBMITTALS

5.1 Submit to the Construction Manager, within 5 days following the receipt of the letter of intent to award, in an electronic template, the following:

a. Electronic logo of organization (as needed)
b. Names, mailing address and electronic address of its Users and Contacts.
c. Designation the role/responsibility for each User

6. SOFTWARE AND HARDWARE REQUIREMENTS

6.1 Each User shall provide and maintain a computer with high speed internet access and an email address. The computer shall have a high speed internet browser (Internet Explorer 8.0 or higher, Firefox version 3.6.12 or higher, Google Chrome or Safari version 5.0 or higher) and a high speed cable Internet access, high speed DSL or T1 line.

6.2 License(s) to Use System - Each Contractor will be provided unlimited licenses to use the system for this project. Each license will allow secure unlimited usage from the notice to proceed until the original contract completion date.

7. SYSTEM DESCRIPTION

7.1 The web based project management system is a "secure, real-time, interactive, centralized database" specifically established and maintained for the management of this construction project. The product is designed to facilitate communication and improve the time management of its users by facilitating the sharing of information. Information will be available 24/7, from any computer meeting the specifications listed above. The information is fully protected. The electronic platform allows information to be transmitted across the internet reducing printing and postage costs and the time associated with such activities.

7.2 The system contains a directory of the project participants.

7.3 The system includes templates, with the CM's letterhead, for each document created inside the system. The template allows the use of "pull down" menus to complete significant portions of each document.

7.4 The system allows the templates (and attached documents created outside the system) to be distributed to Users and Contacts.

7.5 The System contains "translation software" to permit the viewing (and marking) of documents created outside the system. The system can view documents created by different software programs and can deliver images of its translation to any computer meeting the criteria listed above.

7.6 The system can be personalized by the Construction Manager to automatically send e-mail notices upon issuance of certain documents if such a practice facilitates the User's business needs.

7.7 The system is the product of ***Building Blok LLC*** (www.buildingblok.com) and will be continuously updated.

7.8 The Construction Manager will administer the Building Blok User accounts for this project.

8. DOCUMENTS CREATED INSIDE THE SYSTEM

8.1 The following documents shall be created on templates inside the system.

a. Transmittals for submittals processed in the system. The transmittals are automatically created by the system when the submittal is uploaded.
b. Submittal Register showing all of the submittals required of the contract, assigned to each Contractor.
c. Submittal Log: The CM will maintain submittal log after it is initialized.
d. RFI (Requests for Information)
e. Change Orders
f. RFP (Requests for Proposal)
g. ASI (Architect's Supplemental Instructions)
h. Tasks & Memos as determined by the CM
i. Payment Applications
j. Closeout Tracking Log

8.2 The following documents may, at each Users option, be created on the system.

a. Morning & Afternoon Activity Reports generated by the system
b. E-mails: Contacts that do not have access to the system may be sent information from the system, by the system.
c. Reports of information on the system
d. Project Notices: "Broadcast" messages can be sent to other Users system entry screen.

9. DOCUMENTS CREATED OUTSIDE THE SYSTEM AND DISTRIBUTED BY THE SYSTEM

9.1 The following documents are expected to be created outside the system and distributed through the system. The actual documents may be scanned or electronically attached to the transmittal.

a. Technical Submittals: Shop drawings, product data, testing reports, certifications, installation instructions, operation & maintenance manuals, will be submitted and distributed through the system. The Architect will return all submissions through the system electronically. The Construction Manager will distribute submittals (after Architect's action) electronically. Contractors may download and distribute submittals to their subcontractors and suppliers or elect to print paper copies for distribution, or both.
b. Photographs: Digital photographs and scanned images can be loaded onto the system and shared.
d. Schedule of Values/ Payment Applications: (The "pencil" review of these documents can occur inside the system).
e. Change Orders: (The "pencil" review of these documents can occur inside the system.)
g. Schedules: The schedule document(s) will be available for review on the system.
h. Data created in other software may be uploaded to the system electronically.

10. DOCUMENTS CREATED OUTSIDE THE SYSTEM AND DISTRIBUTED OUTSIDE THE SYSTEM

10.1 The following documents are expected to be created outside the system and distributed outside the system. The actual documents may be scanned or electronically attached to the transmittal.

a. Schedules: The Construction Manager will develop the Master Schedule through Microsoft Project 2003. The schedule will be distributed either through hard copies at meetings or through email.
b. Product samples, color samples, physical samples are still required to be provided per the technical specifications, however, the transmittal documenting the distribution shall be done inside the system and submitted electronically and printed to accompany the actual submission.
c. Meeting minutes will be created using Microsoft Word 2003 and distributed through hard copies at meetings or through email.
d. AIA closeout documents, which require an "original" signature, will created and distributed outside the system.

END OF SECTION

SECTION 013216 - CONSTRUCTION SCHEDULE

1. PRE-BID CONSTRUCTION SCHEDULE

1.1 Time is a critical element of this Project. By entering a bid, the Contractor agrees to adhere to the intermediate Milestone Dates and Dates of Substantial and Final Completion established herein. The Contractor also understands that all work must be performed in an orderly and closely coordinated sequence in order to achieve the specified Milestones and Completion Dates, and the Contractor hereby agrees to perform his work in conformance with the Pre-Bid Construction Schedule established herein, or with the then current and approved Project Construction Schedule as amended from time to time by the Construction Manager.

1.2 The Pre-Bid Construction Schedule includes allowances for time lost due to adverse and abnormal weather conditions, other than floods, hurricanes, tornadoes, lightening and other like acts of God. The Contractor understands and agrees that it shall not be entitled to any extensions of the Contract Time or adjustment to the Contract Sum, except as allowed in the General Conditions of the Contract for Construction. The Contractor further acknowledges that the Work may be required to be performed during the winter season, that conditions during this season may be adverse and abnormal, but that such conditions will not be the basis for an extension of the Contract Time or adjustment to the Contract Sum.

2. SCHEDULING OF THE WORK AFTER AWARD OF CONTRACT

2.1 After award of Contract, or issuance of a Notice to Proceed, the Contractor will meet with the Construction Manager to review the Pre-Bid Construction Schedule, and the overall project plan for construction. Following the above review the Contractor will meet with each subcontractor and supplier to view the detailed plans for performing his Work. Following these meetings and within fourteen (14) days after award of the Contract or issuance of a Notice to Proceed, the Contractor shall prepare and submit for the Construction Manager's approval a Work Schedule providing for the expeditious, timely and practical execution of the Work. The Contractor's Work Schedule shall include activity descriptions and durations for shop drawings, fabrication, delivery and installation. If the Construction Manager so requests, the Contractor shall provide adequate explanation regarding crew sizes, production rates and similar data used to arrive at the durations and sequences.

2.2 The Construction Manager shall review the Contractor's Work Schedule, coordinate it with the separate work by other contractors, the Owner and the Construction Manager, and after coordination, shall incorporate it into the approved Project Construction Schedule. The approved Project Construction Schedule shall be issued to the Contractor and the Contractor shall perform his Work in conformity therewith.

2.3 The Contractor shall submit proposed schedule revisions and obtain the written approval of the Construction Manager therefore before deviating from the Project

Construction Schedule.

2.4 The Construction Manager will incorporate approved schedule revisions into the Project Construction Schedule, and shall otherwise update and revise the Project Construction Schedule as the Construction Manager, at his sole discretion, deems necessary.

3. ADHERENCE TO THE SCHEDULE

3.1 The Contractor shall start each part of its Work on the date designated for start in the approved Project Construction Schedule unless advised by the Construction Manager. The Contractor shall carry the Work forward expeditiously with adequate forces, equipment and materials, and shall complete each part of his work on or before the date designated in the approved Project Construction Schedule.

3.2 If the Construction Manager determines that the Contractor is behind schedule, the Construction Manager shall have the right to require that the Contractor take steps, at the Contractor's expense, to accelerate its Work. Such steps shall include increases in manpower, equipment and materials and/or overtime as the Construction Manager may deem necessary. If the Contractor fails to comply with the Construction Manager's instructions relating to improved rate of progress, the Contractor may be held in default under the appropriate provisions of the General Conditions of the Contract.

3.3 Each Contractor shall, if directed by the Construction Manager, provide the Construction Manager a 2-week look ahead of anticipated manpower showing the number of men, classification, and anticipated work.

END OF SECTION

SECTION 013219 - SUBMITTAL REGISTER

1. SUBMITTALS/SUBMITTAL REGISTER

1.1 The Contractor shall submit all items listed or specified within the sections of the Specifications included in its Work. Submittals shall include such items as: contractor's, manufacturer's or fabricator's drawings; descriptive literature including, but not limited to, catalog cuts, diagrams, operation charts or curves; test reports; samples, operations and maintenance manuals, including parts lists; certifications; warranties and other required submittals. Submittals pertinent to materials and equipment which are subject to advance approval shall be scheduled and made prior to the acquisition or the delivery thereof.

1.2 The Contractor shall carefully control procurement operations to assure that each individual submittal is made on or before the dates required for timely performance of its Work.

1.3 Within seven (7) days after award of Contract or issuance of Notice to Proceed, the Contractor shall execute and submit to the Construction Manager, seven (7) copies of the Submittal Register, on a form to be provided by the Construction Manager, on which shall be listed each item of equipment and material of each type for which fabricator's drawings and/or related descriptive data, test reports, samples, spare parts, operation and maintenance manuals, or other types of submittals required by the Specifications. The Submittal Register form shall be reproduced by the Contractor. The order of listing of items on the Register shall conform to the sequence of the items as they occur within the divisions. Drawings of component items forming a system or that are interrelated shall be scheduled to be correlated and submitted concurrently. Certifications to be submitted with the pertinent drawings shall be so scheduled. Adequate time shall be allowed for review and approval and possible resubmittal of any item subject to approval, because no delay damages or time extensions will be allowed for time lost in late submittals or resubmittals. The Construction Manager and Architect/Engineer will review the Submittal Register for approval action. The approved Register will become a part of the Contract and Contractor will be subject to requirements thereof. The Contractor shall revise and/or update the Register monthly to take into account all changes in the Contract. Each such revised edition and/or revision to the Register shall be resubmitted to the Construction Manager. This Register shall be coordinated with related submittals of other Contractors.

2. SAMPLES

2.1 Submit tagged or labeled samples in triplicate, unless another quantity is otherwise specified by the Construction Manager.

2.2 Tags or labels shall be securely affixed and contain as a minimum the following information: Project Name, Contractor's Name, Contract Title and Number, Date, Transmittal Number, Product Manufacturer's or Fabricator's Name and Product Identifier.

END OF SECTION

SECTION 013226 - SUBCONTRACTOR DAILY REPORTS

1. SUBCONTRACTOR DAILY REPORTS

1.1 The Subcontractor shall submit a Daily Report to the Construction Manager on the forms provided covering the following subjects:

1. Work in Progress, including areas where work is being performed, nature of the operations in progress, and the manpower assigned.

2. Extra Work (Time and Material) in progress.

3. Materials Received.

4. Trade labor breakdown including identification of all workers on site and the number of hours (or portions thereof) worked by each.

5. Inspection Checklist (performed daily).

1.2 The Subcontractor shall submit the Daily Report to the Construction Manager by 9:00 AM on the next workday following the workday covered in the Daily Report.

2. DAILY EXTRA WORK REPORT

2.1 The Subcontractor shall submit on the form provided a Daily Extra Work Report on each day he performs authorized Extra Work on a time and material basis.

2.2 A separate Daily Extra Work Report shall be submitted for each separate authorized Extra Work item done on a time and material basis.

2.3 The Subcontractor shall submit his Daily Extra Work Report as an attachment to his Daily Report by 9:00 AM on the next workday following the workday covered in the Daily Extra Work Report.

3. Sample Daily Report

3.1 A sample daily report follows this section for your reference.

END OF SECTION

EDiS COMPANY

CONTRACTOR'S DAILY REPORT

Project Name: _____

Date: _____

Contractor: _____

Contract No. & Description: _____

Weather: _____

Foreman's Name (Print) _____

TRADE	*CLASS	MANPOWER COUNT	TOTAL MAN HOURS	TODAY'S DESCRIPTION / LOCATION OF WORK
	TOTAL			

* *INDICATE: F = FOREMAN; J = JOURNEYMAN; A = APPRENTICE*

Work Status/Work Planned:

Construction Equipment:

Qualified Operator(s)

Deliveries or Materials:

Machinery, tools, material, and equipment to be used:

Inspection of work area, machinery, tools, material, or equipment

The use of any machinery, tool, material, or equipment which is not in compliance with any applicable requirement Is prohibited. Such machine, tool, material or equipment shall either be identified as unsafe by tagging or locking The controls to render them inoperable or shall be physically removed from its place of operation.

Please See Other Side

Below is a general checklist of requirements on this project. Contractors will check off items that pertain to their contract and project tasks. Notify EDiS Field Manager of any issues. This checklist is not meant to be all inclusive. Please refer to additional OSHA regulations for compliance.

House Keeping

- ☐ Material Storage Area's Orderly
- ☐ Trash Containers Available and Emptied daily
- ☐ Fire Hazards
- ☐ Lighting and ventilation
- ☐ Exits and Stair clear passage
- ☐ Walkways, corridors clear passage
- ☐ Daily debris /trash removal
- ☐ _____

Personal Protective Equipment

- ☐ Hard Hats being worn
- ☐ Safety Glasses with side shields being worn
- ☐ Secondary Eye/Face protection
- ☐ Respirators as required
- ☐ Hand protection when needed
- ☐ Ear protection when needed
- ☐ Inspected & Maintained
- ☐ _____

Fire Prevention

- ☐ Fire extinguishers inspected
- ☐ Flammable / Combustibles properly store
- ☐ Approved Fuel cans used and labeled
- ☐ Oxygen / Acetylenes stored properly
- ☐ _____

Electrical

- ☐ GFI in use
- ☐ Three prong insulated extension cords used
- ☐ Extension cords in good condition
- ☐ Lockout / Tag-out program in use
- ☐ _____

Excavations

- ☐ Miss Utility been contacted
- ☐ Properly Barricaded
- ☐ Ladders in use at depths over 4'-0"
- ☐ Ladders every 25'-0" distance
- ☐ Shored, sloped, benched as required
- ☐ Dewatering as needed
- ☐ _____

Ladders

- ☐ Good condition
- ☐ Correct pitch
- ☐ Extends 3'-0" above landing
- ☐ Open and secured / tied off
- ☐ _____

Scaffolds

- ☐ Certified Scaffold Installer
- ☐ Guardrails, toe boards, and planking secured
- ☐ Appropriate signage
- ☐ Adequate cross bracing
- ☐ Secured to building over 25'-0" in height
- ☐ _____

Cranes

- ☐ Rated Load Capacity available in cab
- ☐ Swing Radius barricaded
- ☐ Appropriate certificates / decals / hand signals
- ☐ Daily safety inspection log completed
- ☐ _____

Fall Protection

- ☐ Fall protection plan on file
- ☐ Full harness / shock absorbing lanyard used
- ☐ Anchoring points secured
- ☐ Perimeter barricades
- ☐ Open sided floor protection
- ☐ 6'-0" Tie-off utilized
- ☐ _____

Paperwork

- ☐ MSDS Information
- ☐ Contractors Safety Program
- ☐ Hazardous Communications Training
- ☐ Hazardous Communications Program
- ☐ Contractor Qualified Representation
- ☐ _____

Other

- ☐ _____
- ☐ _____

Foreman / Competent Person:

Print Name_____

SECTION 013300 – SUBMITTAL PROCEDURES

1. GENERAL PROVISIONS

1.1 The general provisions of the Contract, including the Conditions of the Contract (General, Supplementary and other Conditions, if any) and Division 1 as appropriate, apply to the Work specified in this Section.

2. ITEMS TO BE SUBMITTED AT START OF WORK

2.1 Performance/Labor and Material Payment Bond(s): One (1) copy of each bond simultaneously with the signed Agreement. See General Conditions Article 11.4 and Supplementary Conditions.

2.2 Policies or Certificates of Insurance: Two (2) copies simultaneously with the signed Agreement. See General Conditions Article 11 and Supplementary Conditions.

2.3 Contractor's License: Submit a copy of all business licenses required by local and state agencies.

2.4 Contractor's Schedule of Values: Two (2) copies for approval within 21 days after the Agreement is signed. See General Conditions Article 9.2 and provisions in this Section.

2.5 Contractor's Progress Schedule: Two (2) copies for review and reference within 21 days after the Agreement is signed. See General Conditions Article 3.10 and provisions in this Section.

2.6 Submittal Schedule: Two (2) copies for review and reference within 21 days after the Agreement is signed. See provisions in this Section.

2.7 Products List: Two (2) copies for approval within 30 days after the Agreement is signed. See provisions in Section 016200 - MATERIAL AND EQUIPMENT.

3. NON-RESIDENT CONTRACTOR & SUBCONTRACTORS BONDS

3.1 Refer to requirements in Section 011100 - INSTRUCTIONS TO BIDDERS for filing of Surety Bonds with the Division of Revenue.

3.2 If such bonds are required on this project, it will be the responsibility of the Contractor to produce evidence to the Construction Manager that they have been filed, or if not required, to supply a notarized statement that they are not required. This must be done within seven (7) days after award of Contract and in any event before construction starts.

4. RELATED REQUIREMENTS

4.1 See Section 017700 - CONTRACT CLOSE OUT: for submittal requirements for Contract Close out.

5. SUBMITTALS

5.1 All submittals shall be directed to the Construction Manager in the manner directed by the Construction Manager, and paragraph 9 of this section. Contractor shall use the Contractor Submittal Form appended to this section.

5.2 Prepare a Submittal's Schedule for Shop Drawings, Product Data and Samples. Show:

1. The dates for Contractor's submittals.

2. The dates submittals will be required for Owner-furnished products.

3. The date approved submittals will be required from the Architect.

5.3 Should the Architect or Construction Manager elect to omit any items from the list of items to be reviewed, it shall not relieve the Contractor from compliance with the Contract Documents with regard to that item. In such instance, the Contractor may still elect to have submittals prepared for his own use without review by the Architect or Construction Manager.

6. SHOP DRAWINGS

6.1 Conform to provisions in General Conditions applying to Shop Drawings.

6.2 Present in a clear and thorough manner.

1. Identify details by reference to sheet and details, schedule or room numbers shown on Contract Drawings.

2. Maximum sheet size: 30" x 42".

7. PRODUCT DATA

7.1 Conform to provisions in General Conditions applying to Product Data.

7.2 Preparation:

1. Clearly mark each copy to specifically identify products or models pertinent to project.

2. Show performance characteristics and capacities.

3. Show dimensions and clearances required.

4. Show wiring or piping diagrams and controls.

7.3 Manufacturer's standard schematic drawings and diagrams:

1. Modify drawings and diagrams to delete information which is not applicable to the Work.

2. Supplement standard information to provide information specifically applicable to the Work.

8. SAMPLES

8.1 Conform to provisions in General Conditions applying to Samples.

8.2 Provide samples of sufficient size and quantity to clearly illustrate:

1. Functional characteristics of the project, with integrally related parts and attachment devices.

2. Full range of color, texture and pattern.

8.3 Field samples and mock-ups; See requirements, if any, in other specification Sections.

9. SUBMITTAL REQUIREMENTS

9.1 Make submittals promptly through the Construction Manager in accordance with published schedule, and in such sequence as to cause no delay in the Work or in the Work of any other contractor.

9.2 Number of submittals required.

1. Shop drawings: Submit eight (8) copies for each submittal. Copies will be marked up with corrections and comments, stamped and returned. Any additional copies required by the Contractor shall be made by him.

2. Product Data: Submit eight (8) copies. Four (4) will be retained by the Architect, the Construction Manager and the Consultants. Four (4) will be reviewed, marked and stamped by the Architect and returned to the Contractor by the Construction Manager. Any additional copies required by the Contractor shall be made by him from the stamped copy.

3. Samples: Submit four (4) each. When approved it will be returned to the Construction Manager to be retained at the site for reference use.

9.3 Submittals shall contain:

1. The date of submission and the dates of any previous submissions.
2. The Project title and number.
3. Contract identification.
4. The names of the Contractor, Supplier and Manufacturer.
5. Identification of the product, with the specification section number.
6. Field dimensions, clearly identified as such.
7. Relation to adjacent or critical features of the Work or materials.
8. Applicable standards, such as ASTM or Federal Specification numbers.
9. Identification of deviations from Contract Documents.
10. Identification of revisions on resubmittals.
11. An 8 inch x 3 inch blank space for Contractor and Architect's stamps.
12. Contractor's stamp, initialed or signed, certifying review of submittal, verification of products, field measurements and field construction criteria, and coordination of the information within the submittal with requirements of the Work and of Contract Documents. Submittals which have not been stamped with this stamp or its approved equivalent will be returned without being reviewed.

9.4 Shop Drawing coordination and interface with work of other Contracts and adjacent work is the responsibility of each individual Contractor.

9.5 All submittals shall be accompanied by the contractor's submittal form, a copy of which is part of this section. The contractor's submittal form must be completed in its entirety by the contractor.

10. <u>RESUBMISSION REQUIREMENTS</u>

10.1 Make any corrections or changes in the submittals required by the Architect and resubmit until approved.

10.2 Shop drawings and Product Data:

1. Revise initial drawings or data, and resubmit as specified for the initial

submittal.

2. Indicate any changes which have been made other than those requested by the Architect.

10.3 Samples: Submit new samples as required for initial submittal.

11. FINAL DISTRIBUTION OF APPROVED SUBMITTALS

11.1 The Construction Manager will receive and log submittals and forward to Architect after processing.

11.2 The Construction Manager will distribute copies of Shop Drawings and Product Data which carry the Architect's stamp to:

1. Contractor that made submittal.

2. Jobsite File.

3. Record Document File.

4. Other Contractors, as required for coordination.

11.3 The Construction Manager will distribute samples as required.

11.4 The Contractor will distribute copies of Shop Drawings and Product Data which carry the Architect's stamp to:

1. Subcontractors.

2. Suppliers.

3. Fabricators.

12. SCHEDULE OF VALUES

12.1 Use AIA Document G703, Continuation Sheet to G702.

13. PROGRESS SCHEDULE

13.1 Prepare schedules in the form of a horizontal bar chart.

1. Provide separate horizontal bar chart for each trade or operation.

2. Horizontal time scale: Identify the first work day of each week.

3. Scale and spacing: To allow space for notations and future revisions.

4. Minimum sheet size 11 inches by 17 inches.

13.2 Format of listings: The chronological order of the start of each item of work.

13.3 Show the complete sequence of construction by activity.

13.4 Show the dates for the beginning, and completion of, each major element of construction such as:

1. Site clearing.

2. Site utilities.

3. Foundation work.

4. Structural framing.

5. Subcontractor work.

6. Equipment installation.

13.5 Show projected percentage of completion for each item as of the first day of each month.

13.6 Update Progress Schedule monthly and submit with Application for Payment and Schedule of values.

13.7 Indicate progress of each activity to date of submission.

13.8 Show changes occurring since previous submission of schedule:

1. Major changes in scope.

2. Activities modified since previous submission.

3. Revised projections of progress and completion.

4. Other identifiable changes.

13.9 Provide a narrative report as needed to define:

1. Problem areas, anticipated delays and the impact of the schedule.

2. Corrective action recommended, and its effect.

3. The effect of changes on schedules of other prime contractors.

13.10 Submit one reproducible transparency.

13.11 After review, distribute copies of the schedule to:

1. Jobsite File.
2. Subcontractors.
3. Architect.
4. Owner.

13.12 Instruct recipients to report promptly to the Contractor, in writing, any problems anticipated by the projections shown in the schedules.

END OF SECTION

Indian River School District
Referendum 2013
Georgetown Elementary School Classroom & Kitchen Additions

EDiS COMPANY

CONTRACTOR SUBMITTAL FORM

Contractor: **Contract #:**_____

Project Name:

To:

The following submittal (s) for the Architect's Review and Approval:

[ ] Shop Drawings [ ] Product Data [ ] Samples [ ] Samples [ ] Other (Identify)_____

[ ] Design Data [ ] Calculations [ ] Certificates [ ] Coordination Drawings [ ] Reports

[ ] Qualification Statements [ ] Other (Identify)_____

No. of Copies	Date	Submittal Number	Spec. Section #	Description of Submittal Items	Requested Return Date	EDIS Submittal Number (by EDIS)

Deviations from Contract Documents requirements are identified as follows:_____
_____

Remarks:_____

We hereby certify that _____(Contractor)_____has reviewed and approved submittals transmitted herewith for compliance and conformance with requirements of the Contract Documents.

Signed:_____ **Date:**_____

PU09, Revised 5/11

SECTION 013500 – CONTRACTOR EMPLOYEE BACKGROUND CHECK

1. It is the contractor's responsibility to perform background checks and screen all employees working onsite. The background check must include checking for a previous history of Child Abuse Convictions, Child Molestation Convictions, Felony Convictions, and Drug Convictions within the last 5 years. Any employee with any of these convictions may not enter the job site or school campus. This background check must be completed and screened by the contractor prior to an employee entering the job site. The Construction Manager, The Owner's representative and the Owner have the right to request that the screening data be submitted on a case by case basis.

END OF SECTION

SECTION 013523 - SAFETY PROGRAM

1. GENERAL

1.1 The Contractor shall be responsible for initiating, maintaining and supervising all safety activities and programs in connection with the Work.

1.2 Contractor shall be responsible for the safety of its personnel.

1.3 Hard hats and safety glasses must be worn by all personnel on the jobsite, except in contractor's administrative office/trailer. All equipment must comply with OSHA standards. All job site personnel shall wear long pants, shirts (no tank tops) and work boots.

2. SAFETY PROGRAM

2.1 Prior to commencing the Work, the Contractor shall submit to the Construction Manager (1) electronic copy and (1) bound copy of its safety program and one (1) copy of MSDS information in a 2" ringed notebook. One paper copy of the safety program and MSDS will be retained by the Construction Manager in the field office.

2.2 The safety program shall outline those hazards peculiar to the Contractor's Work, and the steps to be taken to eliminate or reduce the risk of injury or loss due to those hazards**. The program shall be site specific.** Contractor shall implement and enforce its safety program, which is in accordance with all OSHA, Federal, State and local laws.

2.3 Contractor shall designate a qualified Safety Supervisor to implement their safety program. Unless otherwise approved by the Construction Manager, the Safety Supervisor shall be the Contractor's Field Superintendent/Foremen.

2.4 Contractor shall furnish the names and qualifications of the competent persons and qualified persons who may be required for their scope of work by the Contractor's safety procedures, and by federal, state and/or local regulations. Examples include competent persons and/or qualified persons for steel erection, excavation, scaffold erection, confined space entry, crane and rigging operations, annual crane inspections, fall protection including horizontal lifeline systems, etc. See the attached Competent/Qualified Person Designation Log.

2.5 Contractor shall provide written certification showing that all employees have been trained on the Contractor's Safety Program. The written certification record shall contain the name or other identity of the employee trained, the date(s) of the training and the signature of the person who conducted the training or the signature of the employer. If the employer relies on training conducted by another employer or completed prior to the effective date of this section, the certification record shall include the date the employer determined the prior training was

adequate rather than the date of actual training. The employer shall instruct each employee in the recognition and avoidance of unsafe conditions and the regulations applicable to his work environment to control or eliminate any hazards or other exposure to illness or injury. Please forward certification (document) of training for each employee on an EDiS project. The latest training certificate shall be maintained.

2.6 Contractor shall provide certification of training on the following programs, as they pertain to your contract and project tasks: Scaffold, Fall Protection, Crane Operator, Signal Person, Crane Maintenance, Steel Erection Fall Protection, Respiratory Protection, Powder-Actuated Tools, and Motor Vehicles. Certification of training must include: Employee's name, date of training, person conducting the training, topics covered, and a statement that the student has successfully completed the course. This list is not meant to be all inclusive; please refer to OSHA regulations for applicable safety requirements.

2.7 Contractor Daily Reports with Safety Inspection Checklist will be submitted daily to Field Manager, verifying inspection of work area, machinery, equipment and tools.

2.8 Prior to starting work on-site, the Contractor shall arrange with the on-site Field Manager to have their employees complete the EDiS Company Zero Accidents Safety Orientation program.

2.9 Contractor shall hold weekly safety toolbox talks with all of its employees every Monday at 12:30 PM. The Contractor shall designate a responsible, capable person to conduct these meetings. Contractor's safety supervisor or superintendent must submit to the Construction Manager weekly toolbox talks attendance sheets and the topics discussed.

3. SUBSTANCE ABUSE POLICY STATEMENT

The Construction Manager is committed to providing a safe work site environment for its employees and Contractors' employees. The Construction Manager does not condone or permit employees and Contractors' employees to use or be under the influence of drugs or alcohol while they are on any of the Construction Manager's work sites. The Policy is as follows:

3.1 It is a violation of the Construction Manager's policy for employees and Contractors' employees to use, possess, sell, trade, or otherwise engage in the use of illegal drugs and alcohol.

3.2 It is a violation for employees and Contractors' employees to report to work while influenced by illegal drugs or alcohol.

3.3. It is a violation for employees and Contractors' employees to use prescription drugs

illegally (i.e. to use prescription drugs that have not been legally obtained) and to use prescription drugs in a manner other than the prescribed intentions.

3.4 Employees and Contractors' employees who are taking medication, which is prescribed by their physician, are expected to discuss potential side effects with their prescribing physician, as it relates to the work requirements.

Violations of this policy will require disciplinary action. If any employees or Contractors' employees are observed or suspected of being influenced by drugs or alcohol, they will be instructed to stop work and may be required to leave the work site.

4. EXECUTION

4.1 Contractor shall comply with all applicable federal, state and local laws, regulations and orders relating to occupational safety and health, and related procedures, and shall, to the extent permitted by law, indemnify and hold Construction Manager, Owner and Architect, and their respective directors, officers, or agents and employees, harmless from any and all liability, public or private, penalties, contractual or otherwise, losses, damages, costs, attorney's fees, expenses, causes of action, claims or judgments resulting from a claim filed by anyone in connection with the aforementioned acts, or any rule, regulation or order promulgated thereunder, arising out of the Contractor's Work, this Agreement or any subcontract executed in prosecution of the Work. Contractor further agrees in the event of a claim of violation of any such laws, regulations, orders or procedures arising out of or in any way connected with the performance of this agreement, Construction Manager may immediately take whatever action is deemed necessary by Owner and/or Construction Manager to remedy the claim or violation. Any and all costs or expenses paid or incurred by Owner and/or Construction Manager in taking such action shall be borne by Contractor, and may be deducted from any payments due Contractor.

4.2 The Contractor agrees to (1) take all necessary steps to promote safety and health on the job site; (2) cooperate with Owner and/or Construction Manager and other Contractors in preventing and eliminating safety and health hazards: (3) train, instruct and provide adequate supervision to ensure that its employees are aware of, and comply with, applicable Federal and State safety and health laws, standards, regulations and rules, safe healthful work practices and all applicable safety rules, regulations and work practices and procedures (4) not create any hazards or expose any of its employees, employees of the Owner and/or Construction Manager or employees of Contractors to any hazards; and (5) where the Contractor is aware of the existence of a hazard not within its control, notify the Construction Manager of the hazard as well as warn exposed persons to avoid the hazard.

4.3 The Contractor's Superintendent or Safety Supervisor shall immediately, verbally report, and promptly thereafter confirm in writing to the Construction Manager any unsafe conditions or practices that are observed, or violations of job safety which are not within the Contractor's control.

4.4 Contractors shall immediately, verbally report, and promptly thereafter confirm in writing, to the Construction Manager any unsafe practices or conditions that are observed which are not under the Contractor's control.

4.5 The Contractor's Superintendent or Safety Supervisor shall insure that adequate first aid supplies are available, and that personnel are qualified to administer first aid/CPR, as required by State and/or Federal regulations.

4.6 Contractor shall promptly notify Construction Manager of any personal injury requiring medical treatment of any of the Contractor's employees at the Project site; or of significant damage to property arising in connection with Contractor's performance, as promptly as possible after the occurrence of such injury or damage. Within twenty-four hours of such occurrence, Contractor shall furnish to Construction Manager a complete written report of such injury or damage.

4.7 Contractor certifies that the forgoing terms shall be made applicable to all Contractors' suppliers, materialmen or anyone furnishing labor and/or materials to the site.

4.8 The Contractor shall continue to educate his job Safety Supervisor or Superintendent of their responsibilities, which shall include:

1. Instructing workers and subcontractors under its supervision in safe work practices and work methods at the time they are given work assignments.

2. Ensuring that its workers and subcontractors have and use the proper protective equipment and suitable tools for the job.

3. Continuously checking to see that no unsafe practices or conditions are allowed to exist on any part of his job.

4. Acquainting its workers and subcontractors with all applicable safety requirements and seeing that they are enforced.

5. Setting a good example for his workers.

6. Making a complete investigation of accidents to determine facts necessary to take corrective action.

7. Promptly completing a "Supervisor's Investigation Form" with his Supervisor's assistance and distributing as required. This form will be provided by the Construction Manager.

8. Holding weekly "tool box" safety meetings with his men to:
   a. Discuss observed unsafe work practices or conditions including a review of

current Construction Manager safety report.

b. Review the accident experience of his crew and discuss correction of accident causes.

c. Encourage safety suggestions from his men.

9. Seeing that prompt medical treatment is administered to an injured employee.

10. Correcting or reporting immediately to job superintendent any observed unsafe conditions, practices or violations of job security.

11. Making all reports required by these Contract Documents to the Construction Manager in a full and timely fashion.

5. SAFETY MEETINGS

5.1 The Contractor's Project Manager or Superintendent shall attend weekly or biweekly supervisory job meetings. The first topic of these meetings will be job site safety. The weekly safety reports will be reviewed and violations must be corrected immediately. Contractors will be encouraged to participate in the on-going jobsite safety.

6. TOOL BOX SAFETY MEETINGS

6.1 The Contractor shall schedule weekly "tool box" safety sessions to be held by his job safety supervisor or superintendent for all of his employees.

6.2 A member of the Contractor's management staff shall periodically attend "tool box" safety sessions to evaluate their effectiveness and offer any appropriate suggestions for improvement.

7. REPORTS

7.1 Contractors shall report all accidents or injuries on a timely basis in accordance with all applicable regulations.

7.2 Contractors shall promptly complete an accident investigation report of all accidents.

7.3 A record of all "tool box" safety sessions shall be made and submitted to the Construction Manager on forms to be provided.

8. SAFETY REPRESENTATIVE

8.1 The Construction Manager may employ the services of a Safety Representative on the project.

8.2 The Safety Representative *will* visit the job site on a weekly basis to determine if the work is being performed in a safe manner and in accordance with OSHA, State and Local safety regulations. Safety representative is not responsible for observing and documenting all possible safety violations. The Contractor's Safety Representative or Superintendent shall attend job site safety inspections with the Safety Representative on a weekly basis.

8.3 The Safety Representative will file a written report with the Construction Manager at the end of each inspection listing the safety violations observed during the inspection.

8.4 The Construction Manager will distribute the Safety Representative's report to all Contractors. All safety violations must be corrected immediately.

9. RIGHT TO STOP THE WORK DUE TO SAFETY VIOLATIONS

9.1 The Construction Manager, in its sole discretion, may order the Contractor to stop the work due to safety violations under the following circumstances:

1. If the Construction Manager observes the Contractor is violating safety regulations and the Contractor takes no immediate action to correct the violation.

2. If the Contractor has been notified by the Construction Manager in writing that he is in violation of safety regulations and fails to take action to correct the violation within 24 hours of the notice.

9.2 If the Construction Manager directs the Contractor to stop the work due to safety violation, it will be done in accordance with the General Conditions of the Contract. Contractor shall not be permitted an adjustment of the Contract Time or Sum for the days lost to any suspension of work.

9.3 If the Construction Manager or Safety Representative observes Contractor's employee violating this safety program or OSHA Standards in an habitual manner, or creating a serious life safety violation, the Construction Manager or Safety Representative may instruct the Contractor's superintendent or foreman to remove the violator from the work site for failure to comply with the safety program and the contract.

10. EMERGENCY PROCEDURES

10.1 The Construction Manager shall establish a central meeting location for the assembly of all Contractors' employees in the event of a major job site emergency.

10.2 Contractor shall assemble all of their personnel and account for all employees. Contractor must immediately report to the Project Superintendent with the status of their employees.

11. FALL PROTECTION PROCEDURES

11.1 Contractor is responsible, in accordance with federal, state, local laws and regulations including OSHA, to provide and enforce their own site specific fall protection program and equipment. The following fall protection procedures shall be enforced by all Contractors as a minimum standard.

All workers on walking/working surfaces with unprotected sides or edges six feet (6′) or higher above the next lower level must be protected from falls by the use of guardrail systems, net systems, fall arrest systems or control access zone programs. It is intended that when fall protection is required, it is required 100% of the time. All contractors are reminded that relevant industry regulations require that contractors comply with the following standards.

1. Workers constructing or working near leading edges must be protected.

2. Workers on the face of formwork or reinforcing steel must be protected at a height of 6 feet (6′) or greater.

3. Scaffolds shall be guarded at 6 feet (6′) above next lower level.

4. Brick layers performing overhand bricklaying and related work six feet (6′) or higher above lower levels must be protected from falls.

5. Roofers must comply with OSHA standards for roof work.

6. The Contractor's controlled access zone plan shall be included in their site-specific safety program and shall be submitted prior to the start of work. Contractors are responsible for assuring programs are OSHA compliant.

7. Guidelines for Residential Construction or any interpretations will not be accepted in lieu of 1926 Standards.

8. Contractors must provide certification per OSHA CFR29 § 1926.503(b) of employee training and retraining on fall protection upon request.

11.2 Contractor shall provide its own fall protection. Fall protection may be provided by guardrail systems, net systems, or personal fall arrest systems. All fall protection systems must comply with OSHA standards.

11.3 Stepladders, exposed to shafts or edges of the building, greater than six feet (6′) above the next lower level, must be tied off or otherwise secured. Employee must wear fall protection, i.e. harness/lanyard.

11.4 The Safety Cable System shall not be altered or removed without a written request submitted to the Project Manager with a copy to the Field Manager. It shall be the responsibility of each and every Contractor that is removing or altering the Safety

Cable System to maintain the fall protection safety provided by the safety cable and not leave the area unprotected. Each and every Contractor shall be responsible to re-install the Safety Cable System immediately after work is completed. Each and every Contractor shall be responsible to re-install the Safety Cable System in accordance to OSHA standards.

11.5 Fall protection will be enforced for Structural Steel Erectors.

1. As for a Contractor engaged in structural steel erection, the Contractor is specifically advised that structural steel erectors shall comply with all protection requirements for all work at a height of six feet (6′) or greater above the next lower level, 100 percent of the time, by any of the following means.

   a. Standard guardrail system.

   b. Personal Fall Arrest System (PFAS) – full body harness with shock absorbing lanyard. Maximum free fall distance permitted, with lanyard and lanyard attachment shall not exceed six feet (6′). Anchor point must be capable of supporting five thousand pounds. Perimeter guard cables or alignment cables may not be used for anchor points.

   c. Access to work area shall be provided by ladders. There shall be sufficient number of ladders available to reduce the amount of "beam walking." When it is absolutely necessary to traverse a beam, 100% fall protection must be utilized.

   d. Steel erection Contractors must, at all times, be able to certify in writing that each of his employees has been properly trained in both OSHA fall protection standards and the Contractor's site specific project fall protection procedures.

   e. Prior to the erection of the steel, the Contractor shall meet with the Project Manager and Safety Representatives to review and document site specific procedures.

END OF SECTION

CONTRACTOR

COMPETENT / QUALIFIED PERSON DESIGNATION LOG

Project: **Field Manager:**

Contract: Contrctor:	Applicable to Subcontractor (yes / no)		Foreman	Competent Person (if not foreman)
Subpart C-General Provisions				
1926-20 General Safety				
Subpart D - Health and Environmental Controls				
1926-53 Ionizing Radiation				
1926-55 Gases, Vapors, Fumes, Dusts, Mists				
1926-57 Ventilation				
1926.59 Hazard Communication				
1926.62 Lead				
Subpart E - Personal Protective Equipment				
1926.101 Hearing				
1926.103 Respirator Protection				
Subpart H - Materials Handling, Storage				
1926.251 Rigging Equipment for Material Handling				
Subpart J - Welding and Cutting				
1926.354 Welding, Cutting and Heating				
Subpart K - Electrical				
1926.404 Wiring Design and Protection				
Subpart L - Scaffolding				
1926.451 Scaffolding				
Subpart M - Fall Protection				
1926.502 Fall Protection Criteria and Practices				
1926.503 Training				
Subpart N - Cranes, Derrick -Redesignated 1926.1501				
Subpart O - Motor Vehicles and Equipment				
1926.601 Motor Vehicles				
Subpart P - Excavations				
1926.651 Specific Excavation Requirements				
1926.652 Requirements to Protective Systems				
Subpart S - Tunnels, Shafts, Caissons				
1926.800 Tunnels, Shafts, Caissons				
1926.803 Compressed Air				
Subpart T - Demolition				
1926.850 Preparatory Operations				
1926.852 Chutes				
1926.859 Mechanical Demolition				
Subpart V - Power Transmission and Distribution				
1926.955 Overhead Lines				

Contract: Contrctor:	Applicable to Subcontractor (yes / no)		Foreman	Competent Person (if not foreman)
Subpart X - Stairways and Ladders				
1926.1053 Ladders				
1926.1060 Training Requirements				
Subpart Z - Toxic and Hazardous Substances				
1926.1101 Asbestos				
1926.1101 thru 1926.1148 Toxic and Hazardous Substances				

I certify that the listed employees are competent persons, as defined and required by specific OSHA standards. They are capable of identifying existing and predictable hazards in the surroundings or working conditions which are unsanitary, hazardous or dangerous to employees, and who has authorization to take prompt corrective measures to eliminate them.

Name (print)

Contractor Signature

Date

PU09, Revised 3/2012

Certification of Training Documents to be Submitted with Safety Policy/Program

Provide a certification of training for employees on your safety program.

In addition, Contractor shall provide certification of training on the following programs, as they pertain to your contract and project tasks. Certification of training must include: Employee's name, date of training, person conducting the training, topics covered, and a statement that the student has successfully completed the course. This list is not meant to be all inclusive: please refer to OSHA regulations for applicable safety requirements.

a. ☐ Scaffold: 1926.454

b. ☐ Fall Protection 1926.503

c. ☐ Crane Operator: 1926.1427

d. ☐ Signal person (this is for any persons connecting material or equipment for lifting): 1926.1428

e. ☐ Crane maintenance: 1926.1429

f. ☐ Steel erection fall protection: 1926.761

g. ☐ Respiratory protection (medical clearance and training records complying with 1910.134

h. ☐ Powder-actuated tools: 1926.302

i. ☐ Motor Vehicles (are those vehicles that operate within an off-highway jobsite, not open to public traffic): 1926.21

SECTION 014500 - QUALITY CONTROL

1. DESCRIPTION

1.1 Quality control services include inspections and tests performed by independent agencies and governing authorities, as well as by the Contractor. Inspection and testing services are intended to determine compliance of the work with requirements specified. Specific quality control requirements are specified in individual specification sections.

2. RESPONSIBILITIES

2.1 Contractor Responsibilities: Except where indicated as being the Owner's responsibility, quality control services are the Contractor's responsibility, including those specified to be performed by an independent agency and not by the Contractor. The Contractor shall employ and pay an independent agency, testing laboratory or other qualified firm to perform quality control services specified.

1. The Owner will engage and pay for services of an independent agency to perform the inspections and tests that are specified as Owner's responsibilities.

2.2 Retest Responsibility: Where results of inspections or test do not indicate compliance with Contract Documents, retests are the Contractor's responsibility.

2.3 Responsibility for Associated Services: The Contractor shall cooperate with independent agencies performing inspections or test. Provide auxiliary services as are reasonable. Auxiliary services include:

1. Provide access to the Work.

2. Assist taking samples.

3. Deliver samples to test laboratory.

2.4 Coordination: The Contractor and independent test agency shall coordinate the sequence of their activities and shall avoid removing and replacing work to accommodate inspections and test. The Contractor is responsible for scheduling time for inspections and tests.

2.5 Qualifications for Service Agencies: Contractor shall engage only inspection and test service agencies which are pre-qualified as complying with "Recommended Requirements for Independent Laboratory Qualification" by the American Council of Independent Laboratories.

2.6 Submittals: Contractor shall submit a certified written report of each test, Inspection or similar service, in duplicate to the Construction Manager. Contractor shall submit

additional copies of each report to any governing authority, when the authority so directs.

2.7 Report Data: Written inspection or test reports shall include:

1. Name of testing agency or test laboratory.

2. Dates and locations of samples, tests or inspections.

3. Names of individual present.

4. Complete inspection of test data.

5. Test results.

6. Interpretations.

7. Recommendations.

2.8 Repair and Protection: Upon completion of inspection or testing, Contractor shall repair damaged work and restore substrates and finishes. Contractor shall comply with requirements for "Cutting and Patching."

2.9 The 2000 IBC code the following testing is code required

1. Structural tests and special inspections must be conducted by an approved agency (an agency or firm regularly engaged in conducting tests or furnishing inspection services, approved by the authority having jurisdiction.) This means that contractors will no longer be allowed to cast their own test cylinders for example.

2. Continuous special inspection (the full-time observation of work by an approved special inspector who is present until completion of the work) is required for any steel welds and connections. Critical elements may include: all slip critical bolted connections, complete and partial groove welds, multi-pass fillet welds and single pass fillet welds greater than 5/16".

3. Continuous special inspection is required during the placement of all concrete and shotcrete for the proper application techniques with a few exceptions.

4. Periodic special inspection (the part-time observation by an approved special inspector) is required for any steel welds and connections. Critical elements may include: all slip critical bolted connections, complete and partial groove welds, multi-pass fillet welds and single pass fillet welds greater than 5/16".

5. Spray applied fireproofing requires periodic special inspection for the structural

member surface conditions, application, thickness, density and bond strength.

6. Based on the classification, occupancy, and design of the structure, the code requires periodic special inspection for placement of masonry units and reinforcing steel and continuous special inspection of grout placement.

END OF SECTION

SECTION 015113 - TEMPORARY ELECTRICITY

1. GENERAL

1.1 RELATED WORK SPECIFIED ELSEWHERE

1. Electrical Basic Materials and Methods, Division 26.

1.2 DESCRIPTION OF SYSTEM

1. Power Source

1. Suppliers:

2. The Construction Manager shall provide 277/480 volt, three phase, 60 cycle power service to the site

3. The Construction Manager will make all arrangements for bringing the power supply to the site and for installation of appropriate temporary transformers to provide for the power supply in 1.2.1.2, above.

4. The source will be adequate to service temporary electrical needs of the proposed construction.

2. Electrical Service

1. Contractor will be responsible to pay for all costs associated with providing electrical service from the power source to their respective site office, temporary storage facilities or temporary construction buildings as appropriate.

2. Prior to issuance of the Notice to Proceed for the electrical contract, the Construction Manager will be responsible for providing temporary electrical service as provided in 1.2.2.3, below. After issuance of the Notice to Proceed for the electrical contract, the Electrical Contractor shall become responsible for maintaining all electrical power supply and service facilities installed by the Construction Manager. The Electrical Contractor shall also, from that date forward, be responsible for providing and maintaining temporary electrical service to the site as provided in 1.2.2.3, below.

3. The Construction Manager or Electrical Contractor, as provided in 1.2.2.2 above, shall install temporary electric service for items below, throughout the construction period, such that power can be secured at any desired point with no more than a 60 foot extension:

1. Power Centers for miscellaneous tools and equipment used in the

construction work shall be provided with a minimum of four 20-amp, 120 volt grounding type outlets. Each outlet shall be provided with ground fault detecting circuit breaker protection.

2. Adequate lighting for safe working conditions shall be provided and maintained on a 24 hour per day basis throughout the building, tunnels, and stairways per OSHA requirements. Each lamp must be rated at least 100 watts. Voltage of each socket must be at least 110 volts.

3. Power for testing and checking equipment must be supplied.

3. Capacity

1. All electrical power supply and service lines installed shall be of adequate capacity for construction use by all trades during the construction period at the locations necessary.

2. The Electrical Contractor shall notify the Power Company if unusually heavy loads, such as welding units, are anticipated.

4. Power Costs

1. The Construction Manager will pay all costs of temporary electrical power used during construction.

2. The Owner will pay all costs of power used in the permanent wiring.

1.3 REQUIREMENTS AND REGULATORY AGENCIES

1. The Electrical Contractor will obtain permits as required by local governmental authorities.

2. The temporary electrical service shall comply with National Electrical Code, 1990 Edition and applicable local codes and utility regulations.

1.4 USE OF PERMANENT SYSTEM

1. The Electrical Contractor shall regulate any part of the permanent electrical system which is used for construction purposes to prevent interference with safety and orderly progress of the Work.

2. Contractors shall leave permanent electrical services in a condition as good as new and clean.

2. PRODUCTS

2.1 MATERIALS

1. General

    1. The materials may be new or used, but must be adequate in capacity for the purposes intended and must not create unsafe conditions or violate the requirements of applicable codes.

2. Conductors

    1. Use wire, cable, or busses of appropriate type, sized in accordance with the National Electrical Code for the applied loads.

    2. Use only UL labeled wire and devices.

2.2 EQUIPMENT

1. Provide appropriate enclosure for the environment in which used in compliance with NEMA standards.

3. EXECUTION

3.1 GENERAL

1. Install all work with a neat and orderly appearance.

2. Make structurally sound throughout.

3. Maintain to give continuous service and to provide safe working conditions.

4. Modify temporary power and light installation as job progress requires.

3.2 INSTALLATION

1. Locate so that interference with storage areas, traffic areas and work under other Contracts is avoided.

3.3 REMOVAL

1. Remove all temporary equipment and materials completely upon completion of construction.

2. Repair all damage caused by the installation and restore to satisfactory condition.

END OF SECTION

SECTION 015123 - TEMPORARY HEATING, COOLING AND VENTILATING

1. GENERAL

1.1 RELATED REQUIREMENTS SPECIFIED ELSEWHERE

1. Temporary Electric: Section 015113

2. Temporary Facilities: Section 015200

3. Heating Requirements for Cold Weather Installation and Protection of Materials: Respective specification section for each item of work.

1.2 DEFINITIONS

1. Temporary Enclosures: Sufficient preliminary enclosures of an area of structure, or of an entire building, to prevent entrance or infiltration of rain water, wind or other elements and which will prevent undue heat loss from within enclosed area.

2. Permanent Enclosure: Stage of construction at which all moisture and weather protection elements of construction have been installed in accordance with Contract Documents, either for a portion of structure, or for an entire building.

1.3 DESCRIPTION OF SYSTEM

1. Prior to the building or portion of building being permanently enclosed, the contractor shall provide temporary heat and ventilation and weather protection necessary for his work, as described below. After permanent enclosure, the Construction Manager will provide temporary heat and ventilation in enclosed areas required to:

    1. Facilitate progress of Work.

    2. Protect Work and products against dampness and cold.

    3. Prevent moisture condensation on surfaces.

    4. Provide suitable ambient temperatures and humidity levels for installation and curing of materials.

    5. Provide adequate ventilation to meet health regulations for safe working environment.

2. Temperatures Required

1. Generally, 24 hours a day: Minimum of 40 degrees F.

2. 24 hours a day during placing, setting and curing of cementitious materials: As required by specification section for each product.

3. 24 hours a day, seven days prior to, and during, placing of interior finishes: woodwork, resilient floors, painting and finishing: As required by specification section for each product.

4. 24 hours a day after application of finishes, and until Substantial Completion: Minimum of 50 degrees F.

3. Ventilation Required:

1. Contractors shall prevent hazardous accumulations of dusts, fumes, mists, vapors or gases in areas occupied during construction.

1. Provide local exhaust ventilation to prevent harmful dispersal of hazardous substances into atmosphere of occupied areas.

2. Dispose of exhaust materials in manner that will not result in harmful dispersal of hazardous substances into atmosphere of occupied areas.

3. Continuously ventilate storage spaces containing hazardous or volatile materials.

2. Contractors shall provide adequate ventilation for:

1. Curing installed materials.

2. Dispersal of humidity.

3. Temporary sanitary facilities.

3. Duration of Operations:

1. For Personnel:

1. At all times personnel occupy an area subject to hazardous accumulations of harmful elements.

2. Continue operation of ventilation and exhaust system for time after cessation of work process to assure removal of harmful elements.

2. For curing installed materials: As required by specification section for respective materials.

3. For humidity dispersal: Continuously ventilate to provide suitable ambient conditions for work.

4. The Construction Manager shall maintain strict supervision of operation of temporary heating and ventilating equipment in order to:

    1. Enforce conformance with applicable codes and standards.

    2. Enforce safe practices.

    3. Prevent abuse of services.

1.4 COSTS OF INSTALLATION AND OPERATION

1. The Contractor shall be responsible for all installation and operating costs for any heat and ventilation as required in this section until the permanent HVAC system is in operation.

2. After the permanent HVAC system is operational, the Owner will pay the costs of fuel for temporary heat and ventilation. The Contractor will pay the costs for maintaining the system until final acceptance by the Owner.

3. The Contractor shall be responsible for all installation and operating costs for any heat required to supplement that which is to be supplied by the Construction Manager in 1.3, above.

1.5 REQUIREMENTS OF REGULATORY AGENCIES

1. The Construction Manager will obtain and pay for permits as required by governing authorities for those activities required by this Section.

2. Contractor shall comply with Federal, State and local codes, and utility company regulations.

2. PRODUCTS

2.1 MATERIALS

1. General

    1. Materials may be new or used, but must be adequate for purposes intended and must not create unsafe conditions nor violate requirements of applicable codes.

2.2 EQUIPMENT

1. Standard products, meeting code requirements.

2. Provide required facilities, including piping, wiring and controls.

3. Portable Heater: Standard Units, meeting code requirements.

    1. Safety Controls against explosion, overheating, and carbon monoxide build up.

    2. Vent direct-fired units to outside.

    3. Provide adequate combustion air.

4. Oil-Fired heaters will not be allowed.

3. EXECUTION

3.1 GENERAL

1. Comply with applicable sections of Division 23 – Heating Ventilating and Air Conditioning.

2. Install work in neat and orderly manner.

3. Make structurally, mechanically and electrically sound throughout.

4. Maintain to give safe, continuous service at required times and to provide safe working conditions.

5. Modify and extend system as work progress requires.

3.2 INSTALLATION

1. Locate units to provide equitable distribution of heat and air movements.

2. Locate to avoid interference with, or hazards to:

    1. Work or movement of personnel.

    2. Traffic areas.

    3. Materials handling.

    4. Storage areas.

5. Work of other Contractors.

6. Finishes.

3.3 OPERATION OF PERMANENT EQUIPMENT

1. The Construction Manager will coordinate with Contractor.

2. The Contractor will place permanent HVAC system in operation only upon written authorization by the Construction Manager.

3. Before operating the permanent HVAC equipment, the Contractor shall confirm to the Construction Manager that:

    1. Inspection has been made by proper authorities.

    2. Systems, equipment piping, strainers, filters and associated operating items are sufficiently complete, cleaned, and ready for operation.

    3. Controls and safety devices are complete and tested, or adequate temporary controls are provided.

    4. Before operating the permanent HVAC equipment, the Contractor shall install temporary filters:

        1. For air handling units.

        2. For permanent ducts.

3.4 REMOVAL

1. The Contractor shall completely remove temporary materials and equipment when no longer required, or on completion of construction.

2. The Contractor shall clean and repair damage caused by temporary installation, and restore equipment to specified or original condition.

3. The Contractor shall remove temporary filters and install new filters, or clean permanent filters, in the permanent HVAC system prior to final acceptance by the Owner.

END OF SECTION

SECTION 015200 - CONSTRUCTION FACILITIES & TEMPORARY CONTROLS

1. GENERAL

1.1 DESCRIPTION

1. Construction Manager and Contractors shall provide all temporary facilities throughout the construction period unless otherwise indicated in the Contract Documents.

2. Construction Manager and Contractors shall pay all costs for providing, maintaining and removing of all temporary facilities unless otherwise indicated in the Contract Documents.

1.2 RELATED WORK SPECIFIED ELSEWHERE

1. Temporary Electric: Section 015113.

2. FACILITIES

2.1 TEMPORARY SANITATION FACILITIES

1. Construction Manager will provide and maintain sanitary facilities for all personnel on the project.

2. The number of sanitary facilities required shall be based on the total number or workers employed on the site and shall be in accordance with the provisions of the applicable code.

3. Construction Manager will maintain sanitary facilities in a sanitary and clean condition at all times.

2.2 TEMPORARY WATER

1. Drinking Water: Contractor shall provide potable water for drinking purposes for all his personnel on the site. He shall furnish disposable drinking cups at water stations. Each water station shall be equipped with a suitable trash container for disposal of the drinking cups.

2. Construction Water: Construction Manager will provide and maintain tap locations for construction water of sufficiently pure and potable quality to avoid deleterious effect on any materials used. Location of construction water tap locations will be determined by the Construction Manager. Contractor shall provide and maintain all hoses, piping and valves as required for obtaining construction water from taps provided by the Construction Manager.

2.3 TEMPORARY TELEPHONES

1. Construction Manager will not provide any telephones or fax machines for Contractor's personnel. Each Contractor is responsible for its own phones and fax machines.

2.4 FIELD OFFICE

1. During the period of the Work and until final acceptance of the project, the Construction Manager will provide a weatherproof office for the Construction Manager's Field Project Manager(s) and Superintendent(s). Contractor shall make provisions for its own field office, subject to approval by the Construction Manager.

2.5 FIRE PROTECTION

1. The Carpentry and General Work Contractor will provide and maintain portable fire extinguishers on each floor level and building area. Number to conform to applicable codes.

2. Contractor shall provide additional fire extinguishers as required by OSHA regulations for its work.

3. Fire extinguishers shall be 10lb, Multi-Purpose (ABC) dry chemical, UL labeled, with a rating of 3a:40bc.

2.6 ACCESS ROADS AND PARKING AREAS

1. The Sitework Contractor will provide and maintain access roads on the site.

2. Neither the Construction Manager nor the Owner will provide parking for Contractor's personnel on or about the project site. All parking provisions required for Contractors will be solely the responsibility of the Contractors or their personnel.

2.7 STORAGE AREAS

1. The Construction Manager will assign storage areas on the site. Storage areas are extremely limited and will be assigned in a manner which will best facilitate the work.

2. Contractor shall provide all other storage space required for its work at off-site locations.

3. All combustible or flammable materials must be safely stored in a secured area in strict accordance with regulations, codes and laws enforced by local, State or

Federal agencies, whichsoever is the most stringent.

2.8 FIRST AID STATION

1. The Construction Manager will provide and maintain an unmanned first aid station for all personnel in his jobsite office.

2.9 SECURITY

1. The Construction Manager will provide the following security measures at the site: security lighting will be provided.

2. All other safety and security measures shall be the responsibility of each Contractor. These measures shall include but are not limited to the provision of secured storage for tools, construction equipment, and materials and equipment scheduled for installation in the building.

2.10 BENCH MARKS AND BASELINE

1. The Construction Manager will lay out and establish and maintain bench marks and baselines.

2. The Contractor shall lay out his own work and shall be responsible for the accuracy of same.

3. Contractor shall check grades, lines, levels and dimensions as shown on the drawings and shall promptly report errors or inconsistencies in same to the Construction Manager before Work proceeds.

4. The Contractor responsible for damaging or altering the bench marks and baselines established by the Construction Manager shall bear the costs of replacing same.

2.11 FIELD OFFICE AND STORAGE TRAILERS

1. Contractor shall provide and maintain its own field office and storage trailers as required.

2. Contractor shall provide temporary heat and power for its field office and storage trailer.

3. Contractor's field offices and storage trailers shall be located as directed by the Construction Manager.

2.12 PROJECT SIGN

1. The Construction Manager will provide a Project Sign naming the major

participants, as determined by the Owner.

2.13 TRASH DISPOSAL

1. Each Contractor shall be responsible for clean up and depositing its common trash in the dumpsters provided by the Construction Manager.

2. The Construction Manager will not provide a trash chute.

3. The Construction Manager will provide dumpsters, and will arrange for disposal of common, non-hazardous, work-related trash deposited in these dumpsters.

2.14 HOISTING

1. Contractor shall provide its own materials hoists and cranes. No personnel hoist will be provided.

2.15 SCAFFOLDING AND WORKING PLATFORMS

1. No scaffolding shall be provided by the Construction Manager. Each Contractor shall provide all scaffolding required to perform its Work.

2.16 SAFETY BARRICADES AND RAILINGS

1. The Structural Contractor shall provide barricades around elevator, stair, shaft and cut openings in floors and roofs, and edges of floors and roofs. All barricades shall at a minimum, be constructed of two runs of 1/2" diameter wire rope cable with adequate turn-buckle and eyes such that no more than 60' of cable need be loosened or removed at any given location for access. All cables shall be installed such that no more than 3" of deflection of the cable is achieved at any point between supports. The methods and materials used in barricading shall be in accordance with OSHA and local code regulations, and shall be approved by the Construction Manager prior to installation. Barricades will be installed immediately after the installation of the floor slab on any level or part of a level on the Building. Until a level has been fully barricaded, the Structural Contractor will be responsible for maintenance of the barricades. After a level has been fully barricaded, the Construction Manager will assume maintenance of the barricades until a subsequent contractor requires the barricades to be removed in order to accomplish his work, at which time that contractor will assume maintenance of the barricades.

2. After the barricades are no longer needed, the Construction Manager will remove the barricades from the site. The Construction Manager will determine the location and scheduling of barriers to be removed.

3. Contractor shall provide for its own barricades at all other trenches, excavations,

and locations not specifically identified in Paragraph 1 above.

4. Contractors who remove barricades shall be responsible for replacing them. If, after proper notification, in writing, from the Construction Manager the responsible Contractor does not correct his deficiencies in safety barricade placement, the Construction Manager reserves the right to undertake this work and backcharge the responsible Contractor(s).

5. During the execution of his work, Contractor will provide daily maintenance of, and upon completion of same, restore all barricades in a manner acceptable to prevailing safety standards enforced by local, State or Federal ordinance, whichsoever is most stringent. The intent is to leave no floor penetration or perimeter opening in an unsafe condition.

6. The Construction Manager shall arrange for temporary ladders required for access to each of the floor levels after the completion of floor slab work, and until the final stairs are ready for use.

2.17 PUMPING AND DRAINAGE

1. Contractor shall provide its own pumping and drainage.

2. When an area is released by one Contractor to another, the Contractor releasing an area shall be responsible for leaving it in a drained condition. The incoming Contractor shall assume responsibility for drainage on the day that he is scheduled to start work in the area. If the incoming Contractor is late in starting work, he shall assume responsibility for pumping and drainage arising as a result.

2.18 TEMPORARY BUILDING ENCLOSURES

1. The Construction Manager will equip all temporary exterior doors of the building with self-closing hardware and padlocks.

2. All other temporary enclosures and protection shall be provided by the Contractor requiring the protection.

3. Temporary enclosures required due to late delivery of materials or untimely installation of work shall be the responsibility of the Contractor responsible for the delay.

2.19 TEMPORARY POWER AND LIGHTING

1. Contractor shall provide all extension cords and outlets as required for obtaining electric power from power centers provided by the Electrical Contractor. Refer to Section 015113 - TEMPORARY ELECTRIC.

2. Contractor shall provide its own additional temporary lighting of sufficient lighting levels to properly install his work.

2.20 TEMPORARY HEAT

1. Contractor shall provide temporary heat as required for its operations. Once a building has reached the "Permanent Enclosure" stage, temporary heat will be provided as specified in Section 015123 - TEMPORARY HEAT AND VENTILATION.

2. Equipment and methods of temporary heating shall be satisfactory to the Construction Manager.

2.21 PROTECTION OF ADJACENT MATERIALS

1. Contractor shall protect adjacent materials and finishes from damage as a result of its work.

2.22 CLEAN UP

1. Contractor shall arrange for clean up and removal of debris resulting from its operations, and shall dispose of debris in accordance with the provisions of Paragraph 2.13 above. Clean up shall be scheduled on a continual basis to ensure that building, grounds and public properties are maintained free from accumulations of waste materials and trash, but in any case not less than once a week.

2. The Contractor will ensure that all waste materials that are combustible or flammable will be removed from the building at the end of each work day. All trash considered to be edible by rodent will be disposed of in metal containers and removed by the end of the work day.

3. At completion of its Work, each Contractor shall remove waste materials, rubbish, tools, equipment, and clean up all exposed surfaces in preparation for final cleaning.

4. If, after notification in writing from the Construction Manager, the Contractor does not correct its deficiencies in housekeeping within twenty four (24) hours, the Construction Manager reserves the right to undertake the Work and to backcharge the Contractor.

5. Final clean up prior to Owner occupancy shall be arranged for by the Construction Manager.

2.23 DUST PROTECTION

1. Contractor shall erect and maintain dust proof protection whenever its operations will produce dust and dirt that might filter through the building into occupied or finished areas. Contractor shall be responsible for all cleaning required due to its failure to provide such dust protection.

2.24 PROTECTION OF EXISTING CONSTRUCTION

1. Contractor shall be responsible for all damage that it may cause to materials and equipment stored or installed by other Contractors.

2.25 OTHER

1. Contractor shall provide any other Temporary Facilities and services that it requires and which are not specifically identified above.

3. PERMITS

3.1 The Construction Manager will obtain the Building Permit. All other permits are to be obtained and paid for by the Contractor requiring them.

4. EXECUTION

4.1 GENERAL

1. Contractor shall install all temporary facilities in accordance with applicable codes.

2. Contractor shall maintain temporary facilities for which it is responsible throughout the construction period.

3. Contractor shall remove all temporary facilities for which it is responsible when they are no longer required or when the Construction Manager directs the removal of same.

4. Contractor shall repair all damage to the Project Site caused by the installation of its temporary facilities.

END OF SECTION

SECTION 016200 - MATERIAL AND EQUIPMENT

1. GENERAL CONDITIONS

1.1 The general provisions of the Contract, including the Conditions of the Contract (General, Supplementary and other Conditions, if any) and Division 1 as appropriate apply to the Work specified in this Section.

1.2 Where work is to be executed under Separate Prime Contracts, the provisions of this Section apply to each Contract.

2. REQUIREMENTS INCLUDED

2.1 All materials and equipment incorporated into the Work shall:

1. be new;

2. conform to applicable specifications and standards; and

3. comply with size, make, type and quality specified, or as specifically approved in writing by the Architect.

2.2 Manufactured and Fabricated Products shall conform to the following requirements:

1. Designed, fabricated and assembled in accord with the best engineering and shop practices.

2. Manufactured like parts of duplicate units to standard sizes and gauges, to be interchangeable.

3. Two or more items of the same kind shall be identical, by the same manufacturer.

4. Products shall be suitable for service conditions.

5. Equipment capacities, sizes and dimensions shown or specified shall be adhered to unless variations are specifically approved in writing.

2.3 Contractor shall not use materials or equipment for any purpose other than that for which it is designated or is specified.

2.4 Materials removed form existing structures shall not be reused in the completed work unless specifically indicated or specified.

2.5 For materials and equipment specifically indicated or specified to be reused in the Work:

1. Contractor shall use special care on removal, handling storage and reinstallation, to assure proper function in the completed Work.

2. Arrange for transportation, storage and handling of products which require off-site storage, restoration or renovation. Pay all costs for such work.

3. MANUFACTURER'S INSTRUCTIONS

3.1 When Contract Documents require that installation of work shall comply with manufacturer's printed instructions, Contractor shall obtain and distribute copies of such instructions to parties involved in the installation, including two copies to Construction Manager.

1. Maintain one set of complete instructions at the job site during installation and until completion.

3.2 Contractor shall handle, install, connect, clean, condition and adjust products in strict accord with such instructions and in conformity with specified requirements.

1. Should job conditions or specified requirements conflict with manufacturer's instructions, Contractor shall consult with Construction Manager for further instructions.

2. Contractor shall perform work in accord with manufacturer's instructions. Contractor shall not omit any preparatory step or installation procedure unless specifically modified or exempted by Contract Documents.

4. TRANSPORTATION AND HANDLING

4.1 Contractor shall arrange deliveries of Products in accord with construction schedules, coordinate to avoid conflict with work and conditions at the site.

1. Deliver Products in undamaged condition, in manufacturer's original containers or packaging, with identifying labels intact and legible.

2. Contractor shall immediately on delivery, inspect shipments to assure compliance with requirements of Contract Documents and approved submittals, and that Products are properly protected and undamaged.

4.2 Contractor shall provide equipment and personnel to handle Products by methods to prevent soiling or damage to Products or packaging.

5. STORAGE AND PROTECTION

5.1 Contractor shall store Products in accord with manufacturer's instructions, with seals and labels intact and legible.

1. Contractor shall store Products subject to damage by the elements in weathertight enclosures.

2. Contractor shall maintain temperature and humidity within the ranges required by manufacture's instructions.

5.2 Exterior Storage

1. Contractor shall store fabricated Products above the ground, on blocking or skids, to prevent soiling or staining. Cover Products which are subject to deterioration with impervious sheet coverings; provide adequate ventilation to avoid condensation.

2. Contractor shall store loose granular materials in a well-drained area on soiled surfaces to prevent mixing with foreign matter.

5.3 Contractor shall arrange storage in a manner to provide easy access for inspection. Contractor shall make periodic inspections of stored Products to assure that Products are maintained under specified conditions, and free from damage or deterioration.

5.4 Contractor shall store flammable materials so as to prevent contact with flames and fire. Conform with manufacturer's recommendations and local laws. Pay particular attention to storage of:

1. Roof insulation.

2. Roofing materials, including solvents.

3. Paint materials.

4. Cleaning and other solvents.

5. Fuels.

5.5 Protection after Installation:

1. Contractor shall provide substantial coverings as necessary to protect installed Products from damage from traffic and subsequent construction operations. Remove when no longer needed.

6. <u>SUBSTITUTIONS AND PRODUCT OPTIONS</u>

6.1 Product List.

1. Within 30 days after Contract Date, Contractor shall submit to Construction

Manager a complete list of major products proposed to be used, with the name of the manufacturer and the installing Contractor.

6.2 Contractor's Options.

1. For Products specified only by reference standard, Contractor shall select any Product meeting that standard.

2. For Products specified by naming several Products or manufacturers, Contractor shall select any one of the Products or manufacturers named which complies with the specifications.

3. For Products specified by naming one or more Products or manufacturers and "or equal", Bidders must, during the bidding period, submit a request for substitutions for any Product or manufacturer not specifically named. See provisions in Paragraph 1.6.3.

4. For Products specified by naming only one Product and manufacturer, there is no option; and Contractor shall provide the precise Product specified.

6.3 Substitutions.

1. Until a date no later than seven (7) days before the date Bids are due, Architect will consider written requests from bidders for substitution of Products. **The contractor will submit any substitution requests to the Construction Manager for transmittal to the Architect. The** architect will review requests and will notify Bidders in an Addendum if the requested substitution is acceptable.

2. Should the Bidder desire a substitution, it shall submit a separate request for each Product, supported with complete data, with drawings and samples as appropriate, including:

    1. Comparison of the qualities of the proposed substitution with that specified.

    2. Changes required in other elements of the Work because of the substitution.

    3. Effect on the construction schedule.

    4. Cost data comparing the proposed substitution with the Product specified.

    5. Any required license fees or royalties.

    6. Availability of maintenance service, and source of replacement materials.

3. Architect, in its sole discretion, shall be the judge of the acceptability of the proposed substitution.

4. A request for a substitution constitutes a representation that Bidder:

    1. has investigated the proposed Product and determined that it is equal to or superior in all respects to that specified;

    2. will provide the same warranties or bonds for the substitution as for the Product specified;

    3. will coordinate the installation of an accepted substitution into the Work, and make such other changes as may be required to make the Work complete in all respects; and

    4. waives all claims for additional costs, under his responsibility, which may subsequently become apparent.

6.4 Architect will review requests for substitutions with reasonable promptness, and notify Bidders, in writing, through the Construction Manager, of the decision to accept or reject the requested substitution. Any decision to accept a substitution must be confirmed in an Addendum issued during the bidding period in order to be valid. Oral approvals will not be binding.

END OF SECTION

SECTION 017123 - FIELD ENGINEERING

1. GENERAL PROVISIONS

1.1 The general provisions of the Contract, including the Conditions of the Contract, (General, Supplementary and other Conditions, if any) and Division 1 as appropriate, apply to the Work specified in this Section.

1.2 The provisions of the section apply to all contracts.

2. SURVEY

2.1 The Owner has had a site survey prepared. This information has been included in this Bid Pac.

3. CONSTRUCTION MANAGER

3.1 The Construction Manager will establish a bench mark and base line from which structures and grades shall be laid out by Contractors as designated in this section. The total extent of this layout is shown on the site drawings. One bench elevation shall be provided.

END OF SECTION

SECTION 017329 - CUTTING AND PATCHING

1. GENERAL

1.1 Definition: "Cutting and Patching" includes cutting into existing construction to provide for the installation or performance of other work and subsequent fitting and patching required to restore surfaces to their original condition.

1.2 Refer to Other Sections of these specifications for specific cutting and patching requirements and limitations applicable to individual units of work.

1.3 Structural Work: Do not cut and patch structural work in a manner resulting in a reduction of load carrying capacity or load deflection ratio. Submit proposal and request and obtain Architect's/Engineer's approval before proceeding with cut and patch of structural work.

1.4 Operational/Safety Limitations: Do not cut and patch operational elements and safety components in a manner resulting in decreased performance, shortened useful life, or increased maintenance. Submit proposals and requests and obtain Architect's/Engineer's approval before proceeding with cut and patches of structural work.

1.5 Visual/Quality Limitations: Do not cut and patch work exposed to view (exterior and interior) in manner resulting in noticeable reduction of aesthetic qualities and similar qualities, as judged by Architect/Engineer.

1. Engage the original Installer/Fabricator, or (if not available) an acceptable equivalent entity, to cut and patch the following categories of exposed work but not limited to
2. Exterior wall materials, ie., curtain wall
3. Finish floor materials, ie., substrate, carpet, ceramic tile
4. Walls
5. Ceilings

1.6 Limitation on Approvals: Architect's/Engineer's approval to proceed with cutting and patching does not waive right to later acquire removal/replacement of work found to be cut and patched in an unsatisfactory manner, as judged by Architect/Engineer.

2. MATERIALS

2.1 General: Use materials for cutting and patching that are identical to existing materials. If identical materials are not available, or cannot be used, use materials that match existing adjacent surfaces to the fullest extent possible with regard to visual effect. Use materials for cutting and patching that will result in equal or better performance characteristics.

3. EXECUTION

3.1 Inspection: Before cutting, examine surfaces to be cut and patched and conditions under which the work is to be performed. If unsafe or otherwise unsatisfactory conditions are encountered, take corrective action before proceeding with the work.

3.2 Temporary Support: To prevent failure provide temporary support of work to be cut.

3.3 Protection: Protect other work during cutting and patching to prevent damage. Provide protection from adverse weather conditions for that part of the project that may be exposed during cutting and patching operations.

1. Avoid interference with use of adjoining areas or interruption of free passage to adjoining areas.

2. Take precautions not to cut existing pipe, conduit or duct serving the building but scheduled to be relocated until provisions have been made to bypass them.

3.4 Cutting: Cut the work using methods that are least likely to damage work to be retained or adjoining work. Where possible review proposed procedures with the original installer; comply with original installer's recommendations.

1. Where cutting is required use hand or small power tools designed for sawing or grinding, not hammering and chopping. Cut through concrete and masonry using a cutting machine such as a carborundum saw or core drill. Cut holes and slots neatly to size required with minimum disturbance of adjacent work. To avoid marring existing finished surfaces, cut and drill from the exposed or finished side into concealed surfaces. Temporarily cover openings when not in use.

3.5 Patching: Patch with seams which are durable and as invisible as possible. Comply with specified tolerances for the work.

1. Restore exposed finishes of patched areas and where necessary extend finish restoration into retained adjoining work in a manner which will eliminate evidence of patching and finishing.

END OF SECTION

SECTION 017700 – CONTRACT CLOSEOUT

1. DESCRIPTION OF REQUIREMENTS

1.1 Provisions of this section apply to the procedural requirements for the actual close out of the Work, not to the administrative matters such as final payment or the change over of insurance. Close out requirements relate to both substantial and final completion of the Work; they also apply to individual portions of completed work as well as the Total work. Specific requirements contained in other sections have precedence over the general requirements contained in this section.

2. PROCEDURES AT SUBSTANTIAL COMPLETION

2.1 Prerequisites: Contractor shall comply with the General Conditions and complete the following before requesting inspection of the Work, or a designated portion of the Work, for certification of substantial completion:

1. submit executed warranties, workmanship bonds, maintenance agreements, inspection certificates, releases of liens, tax certification and similar required documentation for specific units of work, and documents needed to enable Owner's unrestricted occupancy and use;

2. submit record documentation, maintenance manuals, tools, spare parts, keys and similar operational items;

3. complete instructions of Owner's operating personnel, and start up of systems; and

4. complete final cleaning and remove temporary facilities and tools.

2.2 Inspection Procedures: Upon receipt of Contractor's request, Architect/Engineer will either proceed with inspection or advise Construction Manger of prerequisites not fulfilled. Following initial inspection, Architect/Engineer will either prepare certificate of substantial completion, or advise Construction Manager of work which must be performed prior to issuance of certificate. The Architect/Engineer will repeat the inspection when requested and assure that the work has been substantially completed. Results of the completed inspection will form the initial "punch list" for final acceptance.

2.3 Punch List Procedures: Each Contractor shall be given a copy of the punch list with its appropriate work identified. Each Contractor shall be given 9 (nine) calendar work days to complete their punch list work. On the 10th day or as determined by the Construction Manager the Construction Manager shall employ other Contractors, as required, to complete any incomplete punch list work and retain from the appropriate Contractors retainage all costs incurred.

3. PROCEDURES AT FINAL ACCEPTANCE

3.1 Reinspection Procedure: The Architect/Engineer will reinspect the Work upon receipt of the Contractor's notice that, except for those items whose completion has been delayed due to circumstances that are acceptable to the Architect/Engineer, the Work has been completed, including punch list items from earlier inspections. Upon completion of reinspection, the Architect/Engineer will either recommend final acceptance and final payment, or will advise the Contractor of work not completed or obligations not fulfilled as required for final acceptance. If necessary, this procedure will be repeated.

4. RECORD DOCUMENTATION

4.1 Record Drawings: Contractor shall maintain a complete set of either blue or black line prints of the contract documents and shop drawings for record mark up purposes throughout the Contract Time. Contractor shall mark up these drawings during the course of the Work to show both changes and the actual installation, in sufficient detail to form a complete record for Owner's purposes giving particular attention to work that will be concealed and difficult to measure and record at a later date, and Work which may require servicing or replacement during the life of the project. Require the entities marking prints to sign and date each mark up. Bind prints into manageable sets, with durable paper cover, appropriately labeled.

4.2 Maintenance Manual: Contractor shall provide 3-ring vinyl covered binders containing required maintenance manuals, properly identified and indexed and including operating and maintenance instructions extended to cover emergencies, spare parts, warranties, inspection procedures, diagrams, safety, security, and similar appropriate data for each system of equipment item.

4.3 State Tax Certification: Contractor shall provide recent Delaware State Tax Certification form as issued by State of Delaware, Department of Finance, Division of Revenue, Carvel State Office Building, 820 N. French Street, Wilmington, Delaware 19801.

5. GENERAL CLOSE OUT REQUIREMENTS

5.1 Operator Instruction: Contractor shall require each Installer of systems requiring continued operation and maintenance by Owner's operating personnel, to provide on location instruction to Owner's personnel, sufficient to ensure safe, secure, efficient, non-failing utilization and operation of systems. Contractor shall provide instructions for the following categories of work:

1. Mechanical/electrical/electronic systems (not limited to work of Division 15 and 16).

2. Roofing, flashing, joint sealers.

3. Floor finishes.

6. FINAL CLEANING

6.1 At the time of project close out Contractor shall clean or reclean the Work to the condition expected from a normal, commercial building cleaning and maintenance program. Complete the following cleaning operations before requesting the Architect/Engineer's inspection for certification of substantial completion:

1. Remove non-permanent protections and labels.

2. Polish glass.

3. Clean exposed finishes.

4. Touch up minor finish damage.

5. Clean or replace mechanical systems filters.

6. Remove debris.

7. Broom clean unoccupied spaces.

8. Sanitize plumbing and food service facilities.

9. Clean light fixtures and replace burned out lamps.

10. Sweep and wash paved areas.

11. Police yards and grounds.

END OF SECTION

DIVISION 01
SECTION 019113
GENERAL COMMISSIONING REQUIREMENTS
TABLE OF CONTENTS

PART 1. GENERAL

1.1. RELATED DOCUMENTS
1.2. SUMMARY
1.3. DEFINITIONS
1.4. COMMISSIONING TEAM
1.5. OWNER'S RESPONSIBILITIES
1.6. CONTRACTOR'S RESPONSIBILITIES
1.7. CxA'S RESPONSIBILITIES
1.8. COMMISSIONING DOCUMENTATION
1.9. SUBMITTALS
1.10. QUALITY ASSURANCE
1.11. COORDINATION
1.12. ALTERNATES

PART 2. PRODUCTS – NOT USED

PART 3. EXECUTION

3.1. OPERATION AND MAINTENANCE TRAINING REQUIREMENTS

SECTION 019113 - GENERAL COMMISSIONING REQUIREMENTS

PART 1 - GENERAL

1.1 RELATED DOCUMENTS

A. Drawings and general provisions of the Contract, including General and Supplementary Conditions and other Division 01 Specification Sections, apply to this Section.

1.2 SUMMARY

A. This Section includes general requirements that apply to implementation of commissioning without regard to systems, subsystems, and equipment being commissioned.

B. Related Sections include the following:

1. Division 01 Section *"HVAC Commissioning Requirements"* for specific requirements for commissioning HVAC systems.

2. Division 01 Section *"Electrical Commissioning Requirements"* for specific requirements for commissioning electrical systems.

3. Division 01 Section *"Plumbing System Commissioning Requirements"* for specific requirements for commissioning Plumbing systems.

4. Division 01 Section *"Contract Closeout"* for specific requirements for closeout at substantial and final completion.

5. Division 01 Section *"Contract Closeout"* for Specific Requirements for training and demonstration of systems to Owner.

6. Division 01 Section *"Contract Closeout"* for Specific Requirements related to the Preparation of systems operation and maintenance manuals.

1.3 DEFINITIONS

A. CxA: Commissioning Authority.

B. OPR: Owner's Project Requirements.

C. Systems, Subsystems, and Equipment: Where these terms are used together or separately, they shall mean "as-built" systems, subsystems, and equipment.

D. TAB: Testing, Adjusting, and Balancing.

E. Enhanced Commissioning: Per LEED, enhanced commissioning requires the commissioning authority (CxA) to be independent of the design and construction team.

1.4 COMMISSIONING TEAM

A. Members Appointed by Contractor(s): Individuals, each having authority to act on behalf of the entity he or she represents, explicitly organized to implement the commissioning process through coordinated actions. The commissioning team shall consist of, but not be limited to, representatives of Contractor, including Project superintendent and subcontractors, installers, suppliers, and specialists deemed appropriate by the CxA.

B. Members Appointed by Owner:

1. CxA: The designated person, company, or entity that plans, schedules, and coordinates the commissioning team to implement the commissioning process. Owner will engage the CxA under a separate contract.
2. Representatives of the facility user and operation and maintenance personnel.
3. Architect and engineering design professionals.

1.5 OWNER'S RESPONSIBILITIES

A. Assign operation and maintenance personnel and schedule them to participate in commissioning team activities including, but not limited to, the following:

1. Coordination meetings.
2. Training in operation and maintenance of systems, subsystems, and equipment.
3. Testing meetings.
4. Demonstration of operation of systems, subsystems, and equipment.

1.6 CONTRACTOR'S RESPONSIBILITIES

A. Provide utility services required for the commissioning process.

B. Contractor shall assign representatives with expertise and authority to act on behalf of the Contractor and schedule them to participate in and perform commissioning team activities including, but not limited to, the following:

1. Participate in commissioning and construction-phase coordination meetings.
2. Participate in maintenance orientation and inspection.
3. Participate in operation and maintenance training sessions.
4. Participate in final review at acceptance meeting.
5. Certify that Work is complete and systems are operational according to the Contract Documents, including calibration of instrumentation and controls.
6. Evaluate performance deficiencies identified in test reports and, in collaboration with entity responsible for system and equipment installation, recommend corrective action.
7. Review and approve final commissioning documentation.
8. Certify that all pre-test work is complete and operational prior to scheduling performed testing by CxA.
9. During functional performance testing, a representative from the mechanical contractor, controls contractor, and test/balance engineer must be present and participate in testing.

C. Subcontractors shall assign representatives with expertise and authority to act on behalf of subcontractors and schedule them to participate in and perform commissioning team activities including, but not limited to, the following:

1. Participate in commissioning and construction-phase coordination meetings.
2. Participate in maintenance orientation and inspection.
3. Participate in procedures meeting for testing.
4. Participate in final review at acceptance meeting.
5. Provide schedule for operation and maintenance data submittals, equipment startup, and testing to CxA for incorporation into the commissioning plan. Update schedule on a weekly basis throughout the construction period.
6. Provide information to the CxA for developing construction-phase commissioning plan.
7. Participate in training sessions for Owner's operation and maintenance personnel.
8. Provide updated Project Record Documents to the CxA on a daily basis.
9. Gather and submit operation and maintenance data for systems, subsystems, and equipment to the CxA, as specified in Division 01 Section "Operation and Maintenance Data."
10. Provide technicians who are familiar with the construction and operation of installed systems and who shall develop specific test procedures and participate in testing of installed systems, subsystems, and equipment.
11. The test/balance subcontractor, mechanical contractor, and automatic temperature controls subcontractor must be on-site and provide assistance during all functional performance testing.

1.7 CxA'S RESPONSIBILITIES

A. Organize and lead the commissioning team.

B. Prepare a construction-phase commissioning plan. Collaborate with Contractor and with subcontractors to develop test and inspection procedures. Include design changes and scheduled commissioning activities coordinated with overall Project schedule. Identify commissioning team member responsibilities, by name, firm, and trade specialty, for performance of each commissioning task.

C. Convene commissioning team meetings for the purpose of coordination, communication, and conflict resolution; discuss progress of the commissioning processes. Responsibilities include arranging for facilities, preparing agenda and attendance lists, and notifying participants. The CxA shall prepare and distribute minutes to commissioning team members and attendees within five workdays of the commissioning meeting.

D. At a mutually agreed upon time, conduct an initial construction-phase coordination meeting for the purpose of reviewing the commissioning activities and establishing tentative schedules for operation and maintenance submittals; operation and maintenance training sessions; TAB Work; and Project completion.

E. Observe and inspect construction and report progress and deficiencies. In addition to compliance with the Contract Documents, inspect systems and equipment installation for adequate accessibility for maintenance and component replacement or repair.

F. Prepare Project-specific test and inspection procedures and checklists.

G. Schedule, direct, witness, and document tests, inspections, and systems startup.

H. Compile test data, inspection reports, and certificates and include them in the systems manual and commissioning report.

I. Certify date of acceptance and startup for each item of equipment for start of warranty periods.

J. Review Project Record Documents for accuracy. Request revisions from Contractor to achieve accuracy. Project Record Documents requirements are specified in Division 01 Section "Project Record Documents."

K. Review and comment on operation and maintenance documentation and systems manual outline for compliance with the Contract Documents. Operation and maintenance documentation requirements are specified in Division 01 Section "Operation and Maintenance Data."

L. Assemble the final commissioning documentation, including the commissioning report and Project Record Documents.

1.8 COMMISSIONING DOCUMENTATION

A. Commissioning Plan: A document, prepared by CxA, that outlines the schedule, allocation of resources, and documentation requirements of the commissioning process, and shall include, but is not limited to the following:

1. Plan for delivery and review of submittals, systems manuals, and other documents and reports. Identification of the relationship of these documents to other functions and a detailed description of submittals that are required to support the commissioning processes. Submittal dates shall include the latest date approved submittals must be received without adversely affecting commissioning plan.
2. Description of the organization, layout, and content of commissioning documentation (including systems manual) and a detailed description of documents to be provided along with identification of responsible parties.
3. Identification of systems and equipment to be commissioned.
4. Description of schedules for testing procedures along with identification of parties involved in performing and verifying tests.
5. Identification of items that must be completed before the next operation can proceed.
6. Description of responsibilities of commissioning team members.
7. Description of observations to be made.
8. Description of requirements for operation and maintenance training, including required training materials.
9. Description of expected performance for systems, subsystems, equipment, and controls.
10. Schedule for commissioning activities with specific dates coordinated with overall construction schedule.
11. Identification of installed systems, subsystems, and equipment, including design changes that occurred during the construction phase.
12. Process and schedule for documenting changes on a continuous basis to appear in Project Record Documents.
13. Process and schedule for completing prestart and startup checklists for systems, subsystems, and equipment to be verified and tested.

14. Step-by-step procedures for testing systems, subsystems, and equipment with descriptions for methods of verifying relevant data, recording the results obtained, and listing parties involved in performing and verifying tests.

B. Test Checklists: CxA, with assistance of Contractor and Subcontractors, shall develop test checklists for each system, subsystem, or equipment including interfaces and interlocks, and include a separate entry, with space for comments, for each item to be tested. Prepare separate checklists for each mode of operation and provide space to indicate whether the mode under test responded as required. Provide space for testing personnel to sign off on each checklist. Specific checklist content requirements are specified in Division 01 Section *"HVAC Commissioning Requirements", "Electrical Commissioning Requirements"* and *"Plumbing System Commissioning Requirements"*. Test checklists will be jointly developed as the project progresses. Each checklist, regardless of system, subsystem, or equipment being tested, shall include, but not be limited to, the following:

1. Name and identification code of tested item.
2. Test number.
3. Time and date of test.
4. Indication of whether the record is for a first test or retest following correction of a problem or issue.
5. Dated signatures of the person performing test and of the witness, if applicable.
6. Individuals present for test.
7. Deficiencies.
8. Issue number, if any, generated as the result of test.

C. Certificate of Readiness: Certificate of Readiness shall be signed by Contractor, Subcontractor(s), Installer(s), and CxA certifying that systems, subsystems, equipment, and associated controls are ready for testing. Completed test checklists signed by the responsible parties shall accompany this certificate.

D. Test and Inspection Reports: CxA shall record test data, observations, and measurements on test checklists. Photographs, forms, and other means appropriate for the application shall be included with data. CxA shall compile test and inspection reports and test and inspection certificates and include them in systems manual and commissioning report.

E. Corrective Action Documents: CxA shall document corrective action taken for systems and equipment that fail tests. Include required modifications to systems and equipment and revisions to test procedures, if any. Retest systems and equipment requiring corrective action and document retest results.

F. Issues Log: CxA shall prepare and maintain an issues log that describes design, installation, and performance issues that are at variance with the Contract Documents. Identify and track issues as they are encountered, documenting the status of unresolved and resolved issues.

1. Creating an Issues Log Entry:

   a. Identify the issue with unique numeric or alphanumeric identifier by which the issue may be tracked.
   b. Assign a descriptive title of the issue.
   c. Identify date and time of the issue.

d. Identify test number of test being performed at the time of the observation, if applicable, for cross-reference.
e. Identify system, subsystem, and equipment to which the issue applies.
f. Identify location of system, subsystem, and equipment.
g. Include information that may be helpful in diagnosing or evaluating the issue.
h. Note recommended corrective action.
i. Identify commissioning team member responsible for corrective action.
j. Identify expected date of correction.
k. Identify person documenting the issue.

2. Documenting Issue Resolution:

a. Log date correction is completed or the issue is resolved.
b. Describe corrective action or resolution taken. Include description of diagnostic steps taken to determine root cause of the issue, if any.
c. Identify changes to the Contract Documents that may require action.
d. State that correction was completed and system, subsystem, and equipment is ready for retest, if applicable.
e. Identify person(s) who corrected or resolved the issue.
f. Identify person(s) documenting the issue resolution.

3. Issues Log Report: On a periodic basis, but not less than for each commissioning team meeting, CxA shall prepare a written narrative for review of outstanding issues and a status update of the issues log. As a minimum, CxA shall include the following information in the issues log and expand it in the narrative:

a. Issue number and title.
b. Date of the identification of the issue.
c. Name of the commissioning team member assigned responsibility for resolution.
d. Expected date of correction.

G. Commissioning Report: CxA shall document results of the commissioning process including unresolved issues and performance of systems, subsystems, and equipment. The commissioning report shall indicate whether systems, subsystems, and equipment have been completed and are performing according to the Contract Documents. The commissioning report shall include, but is not limited to, the following:

1. Lists and explanations of substitutions; compromises; variances in the Contract Documents; record of conditions; and, if appropriate, recommendations for resolution. This report shall be used to evaluate systems, subsystems, and equipment and shall serve as a future reference document during Owner occupancy and operation. It shall describe components and performance that exceed requirements of the Contract Documents and those that do not meet requirements of the Contract Documents. It may also include a recommendation for accepting or rejecting systems, subsystems, and equipment.
2. Commissioning plan.
3. Testing plans and reports.
4. Corrective modification documentation.
5. Issues log.
6. Completed test checklists.
7. Listing of off-season test(s) not performed and a schedule for their completion.

8. All commissioning documents must be submitted to the building Owner within 90 days of the date of receipt of the Certificate of Occupancy.

H. Systems Manual: CxA shall gather required information and compile systems manual. Systems manual shall include, but is not limited to, the following:
1. Project Record Documents as specified in Division 01 Section "Project Record Documents."
2. Final commissioning plan.
3. Commissioning report.
4. Operation and maintenance data as specified in Division 01 Section "Operation and Maintenance Data."

1.9 SUBMITTALS

A. Test Checklists and Report Forms: CxA shall submit sample checklists and forms to Contractor quality-control manager and subcontractors for review and comment. Submit two copies of each checklist and report form.

B. Test and Inspection Reports: CxA shall submit test and inspection reports.

C. Corrective Action Documents: CxA shall submit corrective action documents.

1.10 QUALITY ASSURANCE

A. Instructor Qualifications: Factory-authorized service representatives, experienced in training, operation, and maintenance procedures for installed systems, subsystems, and equipment.

B. Test Equipment Calibration: Comply with test equipment manufacturer's calibration procedures and intervals. Recalibrate test instruments immediately whenever instruments have been repaired following damage or dropping. Affix calibration tags to test instruments. Instruments shall have been calibrated within six months prior to use.

1.11 COORDINATION

A. Coordinating Meetings: CxA shall conduct coordination meetings of the commissioning team to review progress on the commissioning plan, to discuss scheduling conflicts, and to discuss upcoming commissioning process activities.

B. Pretesting Meetings: CxA shall conduct pretest meetings of the commissioning team to review startup reports, pretest inspection results, testing procedures, testing personnel and instrumentation requirements, and manufacturers' authorized service representative services for each system, subsystem, equipment, and component to be tested.

C. Testing Coordination: CxA shall coordinate sequence of testing activities to accommodate required quality-assurance and -control services with a minimum of delay and to avoid necessity of removing and replacing construction to accommodate testing and inspecting.

1. Schedule times for tests, inspections, obtaining samples, and similar activities.

D. Manufacturers' Field Services: CxA and Contractor shall coordinate services of manufacturers' field services.

1.12 ALTERNATES

A. Refer to Division 01 Section, “Alternates” for description of work under this section affected by alternates.

PART 2 - PRODUCTS (Not Used)

PART 3 - EXECUTION

3.1 OPERATION AND MAINTENANCE TRAINING REQUIREMENTS

A. Training Preparation Conference: Before operation and maintenance training, CxA shall convene a training preparation conference to include Owner's operation and maintenance personnel, Contractor, and subcontractors. In addition to requirements specified in Division 01 Section "Demonstration and Training," perform the following:

1. Review installed systems, subsystems, and equipment.
2. Review instructor qualifications.
3. Review instructional methods and procedures.
4. Review training module outlines and contents.
5. Review course materials (including operation and maintenance manuals).
6. Inspect and discuss locations and other facilities required for instruction.
7. Review and finalize training schedule and verify availability of educational materials, instructors, audiovisual equipment, and facilities needed to avoid delays.
8. For instruction that must occur outside, review weather and forecasted weather conditions and procedures to follow if conditions are unfavorable.

B. Training Modules: Develop an instruction program that includes individual training modules for each system, subsystem, and equipment as specified in Division 01 Section "Demonstration and Training."

END OF SECTION

DIVISION 01
SECTION 019114
PLUMBING COMMISSIONING REQUIREMENTS
TABLE OF CONTENTS

PART 1 GENERAL

1.1 RELATED DOCUMENTS
1.2 SUMMARY
1.3 DEFINITIONS
1.4 CONTRACTOR'S RESPONSIBILITIES
1.5 COMMISSIONING DOCUMENTATION
1.6 SUBMITTALS
1.7 ALTERNATES

PART 2 PRODUCTS – NOT USED

PART 3 EXECUTION

3.1 TESTING PREPARATION
3.2 TAB VERIFICATION
3.3 TESTING

SECTION 019114– PLUMBING COMMISSIONING REQUIREMENTS

PART 1 - GENERAL

1.1 RELATED DOCUMENTS

A. Drawings and general provisions of the Contract, including General and Supplementary Conditions and other Division 01 Specification Sections, apply to this Section.

1.2 SUMMARY

A. This Section includes requirements for commissioning the plumbing system and its subsystems and equipment. This Section supplements the general requirements specified in Division 01 Section "General Commissioning Requirements."

B. Related Sections include the following:

1. Division 01 Section "General Commissioning Requirements" for general requirements for commissioning processes that apply to this Section.

C. The following systems and/or equipment shall be commissioned:

1. Domestic hot water re-circulating system.
2. Domestic hot water heaters.
3. Backflow preventers.
4. Plumbing Fixtures.
5. Thermostatic mixing valves below hand sinks/lavs.
6. Trap priming stations.

1.3 DEFINITIONS

A. Architect: Includes Architect identified in the Contract for Construction between Owner and Contractor, plus consultant/design professionals responsible for design of plumbing systems, electrical, communications, controls for plumbing systems, and other related systems.

B. CxA: Commissioning Authority.

C. Systems, Subsystems, and Equipment: Where these terms are used together or separately, they shall mean "as-built" systems, subsystems, and equipment.

D. TAB: Testing, Adjusting, and Balancing.

1.4 CONTRACTOR'S RESPONSIBILITIES

A. The following responsibilities are in addition to those specified in Division 01 Section "General Commissioning Requirements."

B. Contractor:

1. Attend procedures meeting for TAB Work.
2. Certify that TAB Work is complete.

C. Mechanical Contractor:

1. Attend TAB verification testing.
2. Provide measuring instruments and logging devices to record test data, and data acquisition equipment to record data for the complete range of testing for the required test period.

D. HVAC Instrumentation and Control Contractor: With the CxA, review control designs for compliance with the Contract Documents, controllability with respect to actual equipment to be installed, and recommend adjustments to control designs and sequence of operation descriptions.

E. TAB Subcontractor:

1. Contract Documents Review: With the CxA, review the Contract Documents before developing TAB procedures.

   a. Verify the following:

      1) Accessibility of equipment and components required for TAB Work.
      2) Adequate number and placement of duct balancing dampers to allow proper balancing while minimizing sound levels in occupied spaces.
      3) Adequate number and placement of balancing valves to allow proper balancing and recording of water flow.
      4) Adequate number and placement of test ports and test instrumentation to allow reading and compilation of system and equipment performance data needed to conduct both TAB and commissioning testing.
      5) Air and water flow rates have been specified and compared to central equipment output capacities.

   b. Identify discontinuities and omissions in the Contract Documents.
   c. This review of the Contract Documents by the TAB Subcontractor satisfies requirements for a design review report as specified in Division 23 Section "Testing Adjusting & Balancing for HVAC & Plumbing."

2. Additional Responsibilities: Participate in tests specified in Division 23 Sections "Instrumentation & Controls of HVAC & Plumbing Systems."

F. Electrical Contractor:

1. With the Mechanical Contractor, coordinate installations and connections between and among electrical and plumbing systems, subsystems, and equipment.
2. Attend TAB verification testing.

1.5 COMMISSIONING DOCUMENTATION

A. The following are in addition to documentation specified in Division 01 Section "General Commissioning Requirements."

B. Test Checklists: CxA with assistance of Contractor shall develop test checklists for plumbing systems, subsystems, and equipment, including interfaces and interlocks with other systems. CxA shall prepare separate checklists for each mode of operation and provide space to indicate whether the mode under test responded as required. In addition to the requirements specified in Division 01 Section "General Commissioning Requirements," checklists shall include, but not be limited to, the following:

1. Calibration of sensors and sensor function.
2. Testing conditions under which test was conducted, including (as applicable) ambient conditions, set points, override conditions, and status and operating conditions that impact the results of test.
3. Control sequences for plumbing systems.
4. Strength of control signal for each set point at specified conditions.
5. Responses to control signals at specified conditions.
6. Sequence of response(s) to control signals at specified conditions.
7. Electrical demand or power input at specified conditions.
8. Power quality and related measurements.
9. Expected performance of systems, subsystems, and equipment at each step of test.
10. Narrative description of observed performance of systems, subsystems, and equipment. Notation to indicate whether the observed performance at each step meets the expected results.
11. Interaction of auxiliary equipment.
12. Issues log.

1.6 SUBMITTALS

A. The following submittals are in addition to those specified in Division 01 Section "General Commissioning Requirements."

B. Testing Procedures: CxA shall submit detailed testing plan, procedures, and checklists for each series of tests. Submittals shall include samples of data reporting sheets that will be part of the reports.

C. Certificate of Readiness: CxA shall compile certificates of readiness from Contractor certifying that systems, subsystems, equipment, and associated controls are ready for testing.

D. Certificate of Completion of Installation, Prestart, and Startup: CxA shall certify that installation, prestart, and startup activities have been completed. Certification shall include completed checklists provided by TAB Subcontractor as specified in Division 23 Section "Testing Adjusting & Balancing for HVAC & Plumbing."

E. Certified Pipe Cleaning and Flushing Report: CxA shall certify that pipe cleaning, flushing, hydrostatic testing, and chemical treating have been completed.

F. Test and Inspection Reports: CxA shall compile and submit test and inspection reports and certificates, and shall include them in systems manual and commissioning report.

G. Corrective Action Documents: CxA shall submit corrective action documents.

H. Certified TAB Reports: CxA shall submit verified, certified TAB reports.

1.7 ALTERNATES

A. Refer to Division 01 Section, "Alternates" for description of work under this section affected by alternates.

PART 2 - PRODUCTS (Not Used)

PART 3 - EXECUTION

3.1 TESTING PREPARATION

A. Prerequisites for Testing:

1. Certify that plumbing systems, subsystems, and equipment have been completed, calibrated, and started; are operating according to the Contract Documents; and that Certificates of Readiness are signed and submitted.
2. Certify that plumbing instrumentation and control systems have been completed and calibrated; are operating according to the Contract Documents; and that pretest set points have been recorded.
3. Certify that plumbing procedures have been completed, and that TAB reports have been submitted, discrepancies corrected, and corrective work approved.
4. Test systems and intersystem performance after approval of test checklists for systems, subsystems, and equipment.
5. Set systems, subsystems, and equipment into operating mode to be tested (e.g., normal shut down, normal auto position, normal manual position, unoccupied cycle, emergency power, and alarm conditions).
6. Verify each operating cycle after it has been running for a specified period and is operating in a steady-state condition.
7. Inspect and verify the position of each device and interlock identified on checklists. Sign off each item as acceptable, or failed. Repeat this test for each operating cycle that applies to system being tested.
8. Check safety cutouts, alarms, and interlocks with smoke control and life-safety systems during each mode of operation.
9. Annotate checklist or data sheet when a deficiency is observed.
10. Verify equipment interface with monitoring and control system and TAB criteria; include the following:

    a. Flow rates for domestic re-circulating systems.

    b. Discharge temperatures of water heaters.

c. Re-circ. pump pressures and flow rates.

d. Thermostatic mixing valve temperatures and water flow rates.

e. Trap priming station water discharge.

f. Water heater temperatures and set points.

11. Verify proper responses of monitoring and control system controllers and sensors to include the following:

    a. For each controller or sensor, record the indicated monitoring and control system reading and the test instrument reading. If initial test indicates that the test reading is outside of the control range of the installed device, check calibration of the installed device and adjust as required. Retest malfunctioning devices and record results on checklist or data sheet.
    b. Report deficiencies and prepare an issues log entry.

12. Verify that plumbing equipment field quality-control testing has been completed and approved. CxA shall direct, witness, and document field quality-control tests, inspections, and startup specified in individual Division 22 Sections.

13. Verify flow rates of all aerators.

14. Verify the operation of all plumbing fixtures.

B. Testing Instrumentation: Install measuring instruments and logging devices to record test data for the required test period. Instrumentation shall monitor and record full range of operating conditions and shall allow for calculation of total capacity of system for each mode of operation. Operational modes include the following:

1. Occupied and unoccupied.
2. Life-safety and safety systems.
3. Temporary upset of system operation.
4. Partial occupancy conditions.
5. Special cycles.
6. Alarm conditions.
7. All alarms.

3.2 TAB VERIFICATION

A. TAB Subcontractor shall coordinate with CxA for work required in Division 23 Section "Testing Adjusting & Balancing for HVAC & Plumbing." TAB Subcontractor shall copy CxA with required reports, sample forms, checklists, and certificates.

B. Contractor, Plumbing Contractor, and CxA shall witness TAB Work.

C. TAB Preparation:

1. TAB Subcontractor shall provide CxA with data required for "Pre-Field TAB Engineering Reports" specified in Division 23 Section "Testing Adjusting & Balancing for HVAC & Plumbing."

    a. CxA shall use this data to certify that prestart and startup activities have been completed for systems, subsystems, and equipment installation.

D. Verification of Final TAB Report:

1. CxA shall select, at random, 10 percent of report for field verification.
2. CxA shall notify TAB Subcontractor 10 days in advance of the date of field verification; however, notice shall not include data points to be verified. The TAB Subcontractor shall use the same instruments (by model and serial number) that were used when original data were collected.
3. Failure of an item is defined as follows:

    a. A deviation of more than 10 percent.

4. Failure of more than 10 percent of selected items shall result in rejection of final TAB report.

E. If deficiencies are identified during verification testing, CxA shall notify the HVAC Contractor and Architect, and shall take action to remedy the deficiency. Architect shall review final tabulated checklists and data sheets to determine if verification is complete and that system is operating according to the Contract Documents.

F. CxA shall certify that TAB Work has been successfully completed.

3.3 TESTING

A. Test systems and intersystem performance after test checklists for systems, subsystems, and equipment have been approved.

B. Perform tests using design conditions whenever possible.

1. Simulate conditions by imposing an artificial load when it is not practical to test under design conditions and when written approval for simulated conditions is received from CxA. Before simulating conditions, calibrate testing instruments. Set and document simulated conditions and methods of simulation. After tests, return settings to normal operating conditions.
2. Alter set points when simulating conditions is not practical and when written approval is received from CxA.
3. Alter sensor values with a signal generator when design or simulating conditions and altering set points are not practical. Do not use sensor to act as signal generator to simulate conditions or override values.

C. Scope of Plumbing Contractor Testing:

1. Testing scope shall include entire plumbing installation, from central hot water heating equipment for heat generation through distribution systems to each fixture. It shall include measuring capacities and effectiveness of operational and control functions.
2. Test all operating modes, interlocks, control responses, responses to abnormal or emergency conditions, and verify proper response of building automation system controllers and sensors.
3. Test all plumbing fixtures.
4. Test time to reach temperature and temperature of hot water at all fixtures with thermostatic mixing valves.
5. Test discharge of water at all trap priming stations.
6. Verify that all backflow preventers have been tested. Document in writing.
7. Test operation of all water meters.
8. Test domestic water heaters.
9. Test operation, set points, and safeties of water heaters.
10. Verify that backflow preventers have been tested.
11. Test discharge of water at all trap priming stations.

D. Detailed Testing Procedures: CxA, with Plumbing Contractor, TAB Subcontractor, and Plumbing Instrumentation and Control Contractor, shall prepare detailed testing plans, procedures, and checklists for plumbing systems, subsystems, and equipment.

E. HVAC Instrumentation and Control System Testing:

1. Field testing plans and testing requirements are specified in Division 23 Section "Instrumentation & Controls of HVAC & Plumbing Systems." The CxA, Plumbing Contractor, and the HVAC Instrumentation and Control Contractor shall collaborate to prepare testing plans.
2. CxA shall convene a meeting of appropriate entities to review test report of HVAC instrumentation and control systems.

F. Plumbing System Testing: Plumbing Contractor shall prepare a testing plan to verify performance of water heaters, domestic re-circulating systems, backflow preventers, plumbing fixtures, trap priming stations, high/low mixing valves, thermostatic mixing valves. Plan shall include the following:

1. Sequence of testing and testing procedures for each item of equipment and section of pipe to be tested, identified by identification marker. Markers shall be keyed to Drawings for each pipe sector showing the physical location of each item of equipment and pipe test section. Drawings shall be formatted to allow each item of equipment and section of piping to be physically located and identified when referred to in the system testing plan.
2. Tracking checklist for managing and ensuring that all pipe sections have been tested.
3. Design and actual measurements for all equipment.

G. Deferred Testing:

1. If tests cannot be completed because of a deficiency outside the scope of the plumbing system, the deficiency shall be documented and reported to Owner. Deficiencies shall be resolved and corrected by appropriate parties and test rescheduled.
2. If the testing plan indicates specific seasonal testing, appropriate initial performance tests shall be completed and documented and additional tests scheduled.

H. Testing Reports:

1. Reports shall include measured data, data sheets, and a comprehensive summary describing the operation of systems at the time of testing.
2. Include data sheets for each controller to verify proper operation of the control system, the system it serves, the service it provides, and its location. For each controller, provide space for recording its readout, the reading at the controller's sensor(s), plus comments. Provide space for testing personnel to sign off on each data sheet.
3. Prepare a preliminary test report. Deficiencies will be evaluated by Architect to determine corrective action. Deficiencies shall be corrected and test repeated.

END OF SECTION

DIVISION 01
SECTION 019115
HVAC COMMISSIONING REQUIREMENTS
TABLE OF CONTENTS

PART 1. GENERAL

1.1. RELATED DOCUMENTS
1.2. SUMMARY
1.3. DEFINITIONS
1.4. CONTRACTOR'S RESPONSIBILITIES
1.5. COMMISSIONING DOCUMENTATION
1.6. SUBMITTALS
1.7. ALTERNATES

PART 2. PRODUCTS – NOT USED

PART 3. EXECUTION

3.1. TESTING PREPARATION
3.2. TAB VERIFICATION
3.3. TESTING

SECTION 019115 - HVAC COMMISSIONING REQUIREMENTS

PART 1 - GENERAL

1.1 RELATED DOCUMENTS

A. Drawings and general provisions of the Contract, including General and Supplementary Conditions and other Division 01 Specification Sections, apply to this Section.

1.2 SUMMARY

A. This Section includes requirements for commissioning the HVAC system and its subsystems and equipment. This Section supplements the general requirements specified in Division 01 Section "General Commissioning Requirements."

B. Related Sections include the following:

1. Division 01 Section "General Commissioning Requirements" for general requirements for commissioning processes that apply to this Section.

C. The following systems and/or equipment shall be commissioned:

1. Supply air systems.
2. Exhaust air systems.
3. HVAC controls and sequences of operation.
4. Energy recovery module.
5. Kitchen ventilation system.
6. All plumbing pumps.
7. Ductless heat pumps and air conditioning units.
8. Exhaust Fans.
9. Automatic Temperature Control System.
10. Variable refrigerant volume systems (indoor and outdoor units).
11. Variable refrigerant volume system ATC interface and systems integration.
12. Duct detectors.
13. Electric heaters/radiant heat panels.
14. Air flow monitoring stations.
15. 100% Outside air unit.
16. Condensate overflow safety switches.
17. Air Curtain

1.3 DEFINITIONS

A. Architect: Includes Architect identified in the Contract for Construction between Owner and Contractor, plus consultant/design professionals responsible for design of HVAC, electrical, communications, controls for HVAC systems, and other related systems.

B. CxA: Commissioning Authority.

C. Systems, Subsystems, and Equipment: Where these terms are used together or separately, they shall mean "as-built" systems, subsystems, and equipment.

D. TAB: Testing, Adjusting, and Balancing.

1.4 CONTRACTOR'S RESPONSIBILITIES

A. The following responsibilities are in addition to those specified in Division 01 Section "General Commissioning Requirements."

B. Contractor:

1. Attend procedures meeting for TAB Work.
2. Certify that TAB Work is complete.

C. Mechanical Contractor:

1. Attend TAB verification testing.
2. Provide measuring instruments and logging devices to record test data, and data acquisition equipment to record data for the complete range of testing for the required test period.

D. HVAC Instrumentation and Control Contractor: With the CxA, review control designs for compliance with the Contract Documents, controllability with respect to actual equipment to be installed, and recommend adjustments to control designs and sequence of operation descriptions.

E. TAB Subcontractor:

1. Contract Documents Review: With the CxA, review the Contract Documents before developing TAB procedures.

a. Verify the following:

1) Accessibility of equipment and components required for TAB Work.
2) Adequate number and placement of duct balancing dampers to allow proper balancing while minimizing sound levels in occupied spaces.
3) Adequate number and placement of balancing valves to allow proper balancing and recording of water flow.
4) Adequate number and placement of test ports and test instrumentation to allow reading and compilation of system and equipment performance data needed to conduct both TAB and commissioning testing.
5) Air and water flow rates have been specified and compared to central equipment output capacities.

b. Identify discontinuities and omissions in the Contract Documents.
c. This review of the Contract Documents by the TAB Subcontractor satisfies requirements for a design review report as specified in Division 23 Section "Testing Adjusting & Balancing for HVAC & Plumbing."

2. Additional Responsibilities: Participate in tests specified in Division 23 Sections "Instrumentation & Controls of HVAC & Plumbing Systems."

F. Electrical Contractor:

1. With the Mechanical Contractor, coordinate installations and connections between and among electrical and HVAC systems, subsystems, and equipment.
2. Attend TAB verification testing.

1.5 COMMISSIONING DOCUMENTATION

A. The following are in addition to documentation specified in Division 01 Section "General Commissioning Requirements."

B. Test Checklists: CxA with assistance of Contractor shall develop test checklists for HVAC systems, subsystems, and equipment, including interfaces and interlocks with other systems. CxA shall prepare separate checklists for each mode of operation and provide space to indicate whether the mode under test responded as required. In addition to the requirements specified in Division 01 Section "General Commissioning Requirements," checklists shall include, but not be limited to, the following:

1. Calibration of sensors and sensor function.
2. Testing conditions under which test was conducted, including (as applicable) ambient conditions, set points, override conditions, and status and operating conditions that impact the results of test.
3. Control sequences for HVAC systems.
4. Strength of control signal for each set point at specified conditions.
5. Responses to control signals at specified conditions.
6. Sequence of response(s) to control signals at specified conditions.
7. Electrical demand or power input at specified conditions.
8. Power quality and related measurements.
9. Expected performance of systems, subsystems, and equipment at each step of test.
10. Narrative description of observed performance of systems, subsystems, and equipment. Notation to indicate whether the observed performance at each step meets the expected results.
11. Interaction of auxiliary equipment.
12. Issues log.

1.6 SUBMITTALS

A. The following submittals are in addition to those specified in Division 01 Section "General Commissioning Requirements."

B. Testing Procedures: CxA shall submit detailed testing plan, procedures, and checklists for each series of tests. Submittals shall include samples of data reporting sheets that will be part of the reports.

C. Certificate of Readiness: CxA shall compile certificates of readiness from Contractor certifying that systems, subsystems, equipment, and associated controls are ready for testing.

D. Certificate of Completion of Installation, Prestart, and Startup: CxA shall certify that installation, prestart, and startup activities have been completed. Certification shall include completed checklists provided by TAB Subcontractor as specified in Division 23 Section "Testing Adjusting & Balancing for HVAC & Plumbing."

E. Test and Inspection Reports: CxA shall compile and submit test and inspection reports and certificates, and shall include them in systems manual and commissioning report.

F. Corrective Action Documents: CxA shall submit corrective action documents.

G. Certified TAB Reports: CxA shall submit verified, certified TAB reports.

1.7 ALTERNATES

A. Refer to Division 01 Section, “Alternates” for description of work under this section affected by alternates.

PART 2 - PRODUCTS (Not Used)

PART 3 - EXECUTION

3.1 TESTING PREPARATION

A. Prerequisites for Testing:

1. Certify that HVAC systems, subsystems, and equipment have been completed, calibrated, and started; are operating according to the Contract Documents; and that Certificates of Readiness are signed and submitted.
2. Certify that HVAC instrumentation and control systems have been completed and calibrated; are operating according to the Contract Documents; and that pretest set points have been recorded.
3. Certify that TAB procedures have been completed, and that TAB reports have been submitted, discrepancies corrected, and corrective work approved.
4. Test systems and intersystem performance after approval of test checklists for systems, subsystems, and equipment.
5. Set systems, subsystems, and equipment into operating mode to be tested (e.g., normal shut down, normal auto position, normal manual position, unoccupied cycle, emergency power, and alarm conditions).
6. Verify each operating cycle after it has been running for a specified period and is operating in a steady-state condition.
7. Inspect and verify the position of each device and interlock identified on checklists. Sign off each item as acceptable, or failed. Repeat this test for each operating cycle that applies to system being tested.
8. Check safety cutouts, alarms, and interlocks with duct detectors and life-safety systems during each mode of operation.
9. Annotate checklist or data sheet when a deficiency is observed.

10. Verify equipment interface with monitoring and control system and TAB criteria; include the following:
    a. Operation of heat pump units in both heating and cooling cycles.
    b. Total exhaust airflow and total outdoor-air intake.
    c. Supply, outside air, exhaust and return air flow rates for energy recovery modules and 100% outside air units in each operating mode.
    d. Kitchen ventilation supply and exhaust air flow rates and temperatures, including optical and exhaust sensors.
    e. 100% outside air water source heat pump air flow rates and temperatures in each operating mode.
    f. Sequences of operation of all HVAC equipment.
    g. Ductless heat pumps and air conditioning units with air flow rates and temperatures.
    h. Electric heating equipment volts, amps, and temperature rise.
    i. Supply and return air flow rates for all HVAC equipment.
    j. Operation/Accuracy of air flow measuring stations at various flow rates.
    k. Operation of variable refrigerant flow systems in all modes.
    l. Operation/fan shut-down or overflow condensate safety switches.

11. Verify proper responses of monitoring and control system controllers and sensors to include the following:

    a. For each controller or sensor, record the indicated monitoring and control system reading and the test instrument reading. If initial test indicates that the test reading is outside of the control range of the installed device, check calibration of the installed device and adjust as required. Retest malfunctioning devices and record results on checklist or data sheet.
    b. Report deficiencies and prepare an issues log entry.

12. Verify that HVAC equipment field quality-control testing has been completed and approved. CxA shall direct, witness, and document field quality-control tests, inspections, and startup specified in individual Division 23 Sections.

B. Testing Instrumentation: Install measuring instruments and logging devices to record test data for the required test period. Instrumentation shall monitor and record full range of operating conditions and shall allow for calculation of total capacity of system for each mode of operation. For individual room cooling tests, provide temporary heaters to impose a cooling load. Operational modes include the following:

1. Heating/Cooling Mode.
2. Occupied and unoccupied.
3. Warm up and cool down.
4. Economizer cycle.
5. Emergency power supply.
6. Life-safety and safety systems.
7. Duct detectors.
8. Fire safety.
9. Temporary upset of system operation.
10. Partial occupancy conditions.
11. Special cycles.
12. ERV supply/exhaust flow at partial CO2 levels.

13. Variable refrigerant volume units in heating/cooling modes.
14. Lead/lag modes where redundant equipment is indicated.
15. All alarms.
16. Kitchen make-up air unit and exhaust air fan at full, partial, and minimum air flow rates.

3.2 TAB VERIFICATION

A. TAB Subcontractor shall coordinate with CxA for work required in Division 23 Section "Testing Adjusting & Balancing for HVAC & Plumbing." TAB Subcontractor shall copy CxA with required reports, sample forms, checklists, and certificates.

B. Contractor, HVAC Contractor, and CxA shall witness TAB Work.

C. TAB Preparation:

1. TAB Subcontractor shall provide CxA with data required for "Pre-Field TAB Engineering Reports" specified in Division 23 Section "Testing Adjusting & Balancing for HVAC & Plumbing."

   a. CxA shall use this data to certify that prestart and startup activities have been completed for systems, subsystems, and equipment installation.

D. Verification of Final TAB Report:

1. CxA shall select, at random, 10 percent of report for field verification.
2. CxA shall notify TAB Subcontractor 10 days in advance of the date of field verification; however, notice shall not include data points to be verified. The TAB Subcontractor shall use the same instruments (by model and serial number) that were used when original data were collected.
3. Failure of an item is defined as follows:

   a. For all readings a deviation of more than 10 percent.

4. Failure of more than 10 percent of selected items shall result in rejection of final TAB report.

E. If deficiencies are identified during verification testing, CxA shall notify the HVAC Contractor and Architect, and shall take action to remedy the deficiency. Architect shall review final tabulated checklists and data sheets to determine if verification is complete and that system is operating according to the Contract Documents.

F. CxA shall certify that TAB Work has been successfully completed.

3.3 TESTING

A. Test systems and intersystem performance after test checklists for systems, subsystems, and equipment have been approved.

B. Perform tests using design conditions whenever possible.

1. Simulate conditions by imposing an artificial load when it is not practical to test under design conditions and when written approval for simulated conditions is received from CxA. Before simulating conditions, calibrate testing instruments. Set and document simulated conditions and methods of simulation. After tests, return settings to normal operating conditions.
2. Alter set points when simulating conditions is not practical and when written approval is received from CxA.
3. Alter sensor values with a signal generator when design or simulating conditions and altering set points are not practical. Do not use sensor to act as signal generator to simulate conditions or override values.

C. Scope of HVAC Contractor Testing:

1. Testing scope shall include entire HVAC installation, from central equipment for heat generation and refrigeration through distribution systems to each conditioned space. It shall include measuring capacities and effectiveness of operational and control functions.
2. Test all operating modes, interlocks, control responses, responses to abnormal or emergency conditions, and verify proper response of building automation system controllers and sensors.

D. Detailed Testing Procedures: CxA, with HVAC Contractor, TAB Subcontractor, and HVAC Instrumentation and Control Contractor, shall prepare detailed testing plans, procedures, and checklists for HVAC systems, subsystems, and equipment.

E. HVAC Instrumentation and Control System Testing:

1. Field testing plans and testing requirements are specified in Division 23 Section "Instrumentation & Controls of HVAC & Plumbing Systems". The CxA, HVAC Contractor, Equipment Provider/Manufacturer and the HVAC Instrumentation and Control Contractor shall collaborate to prepare testing plans.
2. CxA shall convene a meeting of appropriate entities to review test report of HVAC instrumentation and control systems.

F. Energy Supply System Testing: HVAC Contractor shall prepare a testing plan to verify performance of gas systems and equipment. Plan shall include the following:

1. Sequence of testing and testing procedures for each equipment item and pipe section to be tested, identified by pipe zone or sector identification marker. Markers shall be keyed to Drawings for each pipe sector showing the physical location of each designated pipe test section. Drawings keyed to pipe zones or sectors shall be formatted to allow each section of piping to be physically located and identified when referred to in system testing plan.
2. Tracking checklist for managing and ensuring that all pipe sections have been tested.

G. Heat-Generation System Testing: HVAC Contractor shall prepare a testing plan to verify performance of heat pumps, energy recovery ventilators, variable refrigerant volume units, 100% outside air units, air curtain, and radiant heat panels. Plan shall include the following:

1. Sequence of testing and testing procedures for each item of equipment and section of pipe to be tested, identified by identification marker. Markers shall be keyed to Drawings for each pipe sector showing the physical location of each item of equipment and pipe test

section. Drawings shall be formatted to allow each item of equipment and section of piping to be physically located and identified when referred to in the system testing plan.
2. Tracking checklist for managing and ensuring that all pipe sections have been tested.
3. Variable refrigerant flow equipment volts, amps, temperatures, and modes of operation.

H. Refrigeration System Testing: HVAC Contractor shall prepare a testing plan to verify performance of heat pumps, refrigerant compressors and condensers, variable refrigerant volume systems, 100% outside air units, and other refrigeration systems. Plan shall include the following:

1. Sequence of testing and testing procedures for each item of equipment and section of pipe to be tested, identified by identification marker. Markers shall be keyed to Drawings showing the physical location of each item of equipment and pipe test section. Drawings shall be formatted to allow each item of equipment and section of piping to be physically located and identified when referred to in the system testing plan.
2. Tracking checklist for managing and ensuring that all pipe sections have been tested.
3. Variable refrigerant flow equipment volts, amps, temperatures, and modes of operation.

I. HVAC Distribution System Testing: HVAC Contractor shall prepare a testing plan to verify performance of air and hydronic distribution systems; special exhaust; ERV unit supply and exhaust, kitchen ventilation systems, and other distribution systems. Include HVAC terminal equipment and unitary equipment. Plan shall include the following:

1. Sequence of testing and testing procedures for each item of equipment and section of pipe to be tested, identified by identification marker. Markers shall be keyed to Drawings showing the physical location of each item of equipment and pipe test section. Drawings shall be formatted to allow each item of equipment and section of piping to be physically located and identified when referred to in the system testing plan.
2. Tracking checklist for managing and ensuring that all pipe sections have been tested.
3. Equipment, air flow rates, air temperatures, safeties, and demand controlled ventilation.

J. Deferred Testing:

1. If tests cannot be completed because of a deficiency outside the scope of the HVAC system, the deficiency shall be documented and reported to Owner. Deficiencies shall be resolved and corrected by appropriate parties and test rescheduled.
2. If the testing plan indicates specific seasonal testing, appropriate initial performance tests shall be completed and documented and additional tests scheduled.

K. Testing Reports:

1. Reports shall include measured data, data sheets, and a comprehensive summary describing the operation of systems at the time of testing.
2. Include data sheets for each controller to verify proper operation of the control system, the system it serves, the service it provides, and its location. For each controller, provide space for recording its readout, the reading at the controller's sensor(s), plus comments. Provide space for testing personnel to sign off on each data sheet.
   Prepare a preliminary test report. Deficiencies will be evaluated by Architect to determine corrective action. Deficiencies shall be corrected and test repeated.

END OF SECTION

DIVISION 01
SECTION 019116
ELECTRICAL SYSTEMS COMMISSIONING REQUIREMENTS
TABLE OF CONTENTS

PART 1 GENERAL

1.1 RELATED DOCUMENTS
1.2 SUMMARY
1.3 DEFINITIONS
1.4 CONTRACTOR'S RESPONSIBILITIES
1.5 COMMISSIONING DOCUMENTATION
1.6 SUBMITTALS
1.7 ALTERNATES

PART 2 PRODUCTS – NOT USED

PART 3 EXECUTION

3.1 TESTING PREPARATION
3.2 TESTING

SECTION 019116 – ELECTRICAL SYSTEMS COMMISSIONING REQUIREMENTS

PART 1 - GENERAL

1.1 RELATED DOCUMENTS

A. Drawings and general provisions of the Contract, including General and Supplementary Conditions and Division 01 Specification Sections, apply to this Section.

1.2 SUMMARY

A. This Section includes requirements for commissioning the electrical system and its subsystems and equipment. This Section supplements the general requirements specified in Division 01 Section "General Commissioning Requirements."

B. Related Sections include the following:

1. Division 01 Section "General Commissioning Requirements" for general requirements for commissioning processes that apply to this Section.

C. The following systems and/or equipment shall be commissioned:

1. Normal Power Supply System
   a. Distribution panelboard(s), including surge protective devices where applicable.
   b. Branch panelboards
   c. Dry-type transformers
   d. Safety/disconnect switches
   e. Enclosed circuit breakers
   f. Motor controllers

2. Lighting Control System(s)
   a. Digital lighting control system
   b. Low-voltage occupancy sensor based lighting control system

3. Communications Systems
   a. Data network
   b. Voice/Telephone network
   c. Optical fiber network
   d. Cable television (CATV) network
   e. Paging/intercom system
   f. Clock system

4. Fire Alarm System

5. Area of Refuge/Rescue Assistance System

1.3 DEFINITIONS

A. Architect: Includes Architect identified in the Contract for Construction between Owner and Contractor, plus consultant/design professionals responsible for design of electrical systems, electrical, communications, and other related systems.

B. CxA: Commissioning Authority.

C. Systems, Subsystems, and Equipment: Where these terms are used together or separately, they shall mean "as-built" systems, subsystems, and equipment.

1.4 CONTRACTOR'S RESPONSIBILITIES

A. The following responsibilities are in addition to those specified in Division 01 Section "General Commissioning Requirements."

B. Electrical Contractor:

1. Provide certified and calibrated measuring instruments and logging devices to record test data, and data acquisition equipment to record data for the complete range of testing for the required test period.

C. Electrical Contractor:

1. With the Mechanical Contractor, coordinate installations and connections between and among electrical and HVAC systems, subsystems, and equipment.
2. Attend TAB verification testing.

1.5 COMMISSIONING DOCUMENTATION

A. The following are in addition to documentation specified in Division 01 Section "General Commissioning Requirements."

B. Test Checklists: CxA with assistance of Contractor shall develop test checklists for electrical systems, subsystems, and equipment, including interfaces and interlocks with other systems. CxA shall prepare separate checklists for each mode of operation and provide space to indicate whether the mode under test responded as required. In addition to the requirements specified in Division 01 Section "General Commissioning Requirements," checklists shall include, but not be limited to, the following:

1. Calibration of sensors and sensor function.
2. Testing conditions under which test was conducted, including (as applicable) ambient conditions, set points, override conditions, and status and operating conditions that impact the results of test.
3. Control sequences for electrical and emergency generator systems.
4. Strength of control signal for each set point at specified conditions.
5. Responses to control signals at specified conditions.

6. Sequence of response(s) to control signals at specified conditions.
7. Electrical demand or power input at specified conditions.
8. Power quality and related measurements.
9. Expected performance of systems, subsystems, and equipment at each step of test.
10. Narrative description of observed performance of systems, subsystems, and equipment. Notation to indicate whether the observed performance at each step meets the expected results.
11. Interaction of auxiliary equipment.
12. Issues log.

1.6 SUBMITTALS

A. The following submittals are in addition to those specified in Division 01 Section "General Commissioning Requirements."

B. Testing Procedures: CxA shall submit detailed testing plan, procedures, and checklists for each series of tests. Submittals shall include samples of data reporting sheets that will be part of the reports.

C. Certificate of Readiness: CxA shall compile certificates of readiness from Contractor certifying that systems, subsystems, equipment, and associated controls are ready for testing.

D. Certificate of Completion of Installation, Prestart, and Startup: CxA shall certify that installation, prestart, and startup activities have been completed.

E. Test and Inspection Reports: CxA shall compile and submit test and inspection reports and certificates, and shall include them in systems manual and commissioning report.

F. Corrective Action Documents: CxA shall submit corrective action documents.

1.7 ALTERNATES

A. Refer to Division 01 Section, “Alternates” for description of work under this Section affected by alternates.

PART 2 - PRODUCTS (Not Used)

PART 3 - EXECUTION

3.1 TESTING PREPARATION

A. Prerequisites for Testing:

1. Certify that electrical systems, subsystems, and equipment have been completed, calibrated, and started; are operating according to the Contract Documents; and that Certificates of Readiness are signed and submitted.

2. Certify that electrical instrumentation and control systems have been completed and calibrated; are operating according to the Contract Documents; and that pretest set points have been recorded.
3. Test systems and intersystem performance after approval of test checklists for systems, subsystems, and equipment.
4. Set systems, subsystems, and equipment into operating mode to be tested (e.g., normal shut down, normal auto position, normal manual position, unoccupied cycle, emergency power, and alarm conditions).
5. Verify each operating cycle after it has been running for a specified period and is operating in a steady-state condition.
6. Inspect and verify the position of each device and interlock identified on checklists. Sign off each item as acceptable, or failed. Repeat this test for each operating cycle that applies to system being tested.
7. Check safety cutouts, alarms, and interlocks with life-safety systems during each mode of operation.
8. Annotate checklist or data sheet when a deficiency is observed.

9. Verify proper responses of monitoring and control system controllers and sensors to include the following:

    a. For each controller or sensor, record the indicated monitoring and control system reading and the test instrument reading. If initial test indicates that the test reading is outside of the control range of the installed device, check calibration of the installed device and adjust as required. Retest malfunctioning devices and record results on checklist or data sheet.
    b. Report deficiencies and prepare an issues log entry.

3.2 TESTING

A. Test systems and intersystem performance after test checklists for systems, subsystems, and equipment have been approved.

B. Perform tests using design conditions whenever possible.

1. Simulate conditions by imposing an artificial load when it is not practical to test under design conditions and when written approval for simulated conditions is received from CxA. Before simulating conditions, calibrate testing instruments. Set and document simulated conditions and methods of simulation. After tests, return settings to normal operating conditions.

C. Scope of Electrical Contractor Testing:

1. Testing scope shall include entire electrical installation, from incoming service through distribution systems to each space. It shall include measuring voltages and currents and effectiveness of operational and control functions.
2. Test all operating modes, interlocks, control responses, responses to abnormal or emergency conditions, and verify proper response of building automation system controllers and sensors.

D. Detailed Testing Procedures: CxA, with Electrical Contractor shall prepare detailed testing plans, procedures, and checklists for electrical systems, subsystems, and equipment.

E. Electrical System Testing: Electrical Contractor shall prepare a testing plan to verify performance of electrical distribution systems, communication system, fire alarm system, and exterior lighting control systems. Plan shall include the following:

1. Sequence of testing and testing procedures for each item of equipment and section of wiring to be tested, identified by identification marker. Markers shall be keyed to Drawings for each wiring sector showing the physical location of each item of equipment and electrical wiring test section. Drawings shall be formatted to allow each item of equipment and section of wiring to be physically located and identified when referred to in the system testing plan.
2. Tracking checklist for managing and ensuring that all wiring systems have been tested.

F. Deferred Testing:

1. If tests cannot be completed because of a deficiency outside the scope of the electrical system, the deficiency shall be documented and reported to Owner. Deficiencies shall be resolved and corrected by appropriate parties and test rescheduled.
2. If the testing plan indicates specific seasonal testing, appropriate initial performance tests shall be completed and documented and additional tests scheduled.

G. Testing Reports:

1. Reports shall include measured data, data sheets, and a comprehensive summary describing the operation of systems at the time of testing.
2. Include data sheets for each electrical systems to verify proper operation of the electrical systems, the system it serves, the service it provides, and its location. Provide space for testing personnel to sign off on each data sheet.
3. Prepare a preliminary test report. Deficiencies will be evaluated by Architect to determine corrective action. Deficiencies shall be corrected and test repeated.

END OF SECTION

SECTION 024119 - SELECTIVE DEMOLITION

PART 1 - GENERAL

1.1 RELATED DOCUMENTS

A. Drawings and general provisions of the Contract, including General and Supplementary Conditions and Division 01 Specification Sections, apply to this Section.

1.2 SUMMARY

A. Section Includes:

1. Demolition and removal of selected portions of building or structure.
2. Demolition and removal of selected site elements.
3. Salvage of existing items to be reused or recycled.

B. Related Requirements:

1. Section 011000 "Summary" for restrictions on the use of the premises, Owner-occupancy requirements, and phasing requirements.
2. Section 015639 "Temporary Tree and Plant Protection" for temporary protection of existing trees and plants that are affected by selective demolition.
3. Section 017300 "Execution" for cutting and patching procedures.
4. Section 311000 "Site Clearing" for site clearing and removal of above- and below-grade improvements.

1.3 DEFINITIONS

A. Remove: Detach items from existing construction and legally dispose of them off-site unless indicated to be removed and salvaged or removed and reinstalled.

B. Remove and Salvage: Carefully detach from existing construction, in a manner to prevent damage, and deliver to Owner ready for reuse.

C. Remove and Reinstall: Detach items from existing construction, prepare for reuse, and reinstall where indicated.

D. Existing to Remain: Existing items of construction that are not to be permanently removed and that are not otherwise indicated to be removed, removed and salvaged, or removed and reinstalled.

1.4 MATERIALS OWNERSHIP

A. Unless otherwise indicated, demolition waste becomes property of Contractor.

B. Historic items, relics, antiques, and similar objects including, but not limited to, cornerstones and their contents, commemorative plaques and tablets, and other items of interest or value to Owner that may be uncovered during demolition remain the property of Owner.

1. Carefully salvage in a manner to prevent damage and promptly return to Owner.

1.5 PREINSTALLATION MEETINGS

A. Predemolition Conference: Conduct conference at Project site.

1. Inspect and discuss condition of construction to be selectively demolished.
2. Review structural load limitations of existing structure.
3. Review and finalize selective demolition schedule and verify availability of materials, demolition personnel, equipment, and facilities needed to make progress and avoid delays.
4. Review requirements of work performed by other trades that rely on substrates exposed by selective demolition operations.
5. Review areas where existing construction is to remain and requires protection.

1.6 INFORMATIONAL SUBMITTALS

A. Qualification Data: For refrigerant recovery technician.

B. Proposed Protection Measures: Submit report, including drawings, that indicates the measures proposed for protecting individuals and property, for environmental protection, for dust control and, for noise control. Indicate proposed locations and construction of barriers.

C. Schedule of Selective Demolition Activities: Indicate the following:

1. Detailed sequence of selective demolition and removal work, with starting and ending dates for each activity. Ensure Owner's on-site operations are uninterrupted.
2. Interruption of utility services. Indicate how long utility services will be interrupted.
3. Coordination for shutoff, capping, and continuation of utility services.
4. Use of elevator and stairs.
5. Coordination of Owner's continuing occupancy of portions of existing building and of Owner's partial occupancy of completed Work.

D. Inventory: Submit a list of items to be removed and salvaged and deliver to Owner prior to start of demolition.

E. Predemolition Photographs or Video: Submit before Work begins.

F. Statement of Refrigerant Recovery: Signed by refrigerant recovery technician responsible for recovering refrigerant, stating that all refrigerant that was present was recovered and that recovery was performed according to EPA regulations. Include name and address of technician and date refrigerant was recovered.

G. Warranties: Documentation indicated that existing warranties are still in effect after completion of selective demolition.

1.7 CLOSEOUT SUBMITTALS

A. Inventory: Submit a list of items that have been removed and salvaged.

B. Landfill Records: Indicate receipt and acceptance of hazardous wastes by a landfill facility licensed to accept hazardous wastes.

1.8 QUALITY ASSURANCE

A. Refrigerant Recovery Technician Qualifications: Certified by an EPA-approved certification program.

1.9 FIELD CONDITIONS

A. Owner will occupy portions of building immediately adjacent to selective demolition area. Conduct selective demolition so Owner's operations will not be disrupted.

B. Conditions existing at time of inspection for bidding purpose will be maintained by Owner as far as practical.

C. Notify Architect of discrepancies between existing conditions and Drawings before proceeding with selective demolition.

D. Hazardous Materials: It is not expected that hazardous materials will be encountered in the Work.

1. If suspected hazardous materials are encountered, do not disturb; immediately notify Architect and Owner. Hazardous materials will be removed by Owner under a separate contract.

E. Storage or sale of removed items or materials on-site is not permitted.

F. Utility Service: Maintain existing utilities indicated to remain in service and protect them against damage during selective demolition operations.

1. Maintain fire-protection facilities in service during selective demolition operations.

1.10 WARRANTY

A. Existing Warranties: Remove, replace, patch, and repair materials and surfaces cut or damaged during selective demolition, by methods and with materials so as not to void existing warranties. Notify warrantor before proceeding.

B. Notify warrantor on completion of selective demolition, and obtain documentation verifying that existing system has been inspected and warranty remains in effect. Submit documentation at Project closeout.

PART 2 - PRODUCTS

2.1 PERFORMANCE REQUIREMENTS

A. Regulatory Requirements: Comply with governing EPA notification regulations before beginning selective demolition. Comply with hauling and disposal regulations of authorities having jurisdiction.

B. Standards: Comply with ANSI/ASSE A10.6 and NFPA 241.

PART 3 - EXECUTION

3.1 EXAMINATION

A. Verify that utilities have been disconnected and capped before starting selective demolition operations.

B. Review record documents of existing construction provided by Owner. Owner does not guarantee that existing conditions are same as those indicated in record documents.

C. Survey existing conditions and correlate with requirements indicated to determine extent of selective demolition required.

D. When unanticipated mechanical, electrical, or structural elements that conflict with intended function or design are encountered, investigate and measure the nature and extent of conflict. Promptly submit a written report to Architect.

E. Perform an engineering survey of condition of building to determine whether removing any element might result in structural deficiency or unplanned collapse of any portion of structure or adjacent structures during selective building demolition operations.

1. Perform surveys as the Work progresses to detect hazards resulting from selective demolition activities.
2. Engage a professional engineer where Contractor’s field personnel are unable to make adequate determination.

F. Survey of Existing Conditions: Record existing conditions by use of preconstruction photographs or preconstruction videotapes.

1. Comply with requirements specified in Section 013233 "Photographic Documentation."
2. Inventory and record the condition of items to be removed and salvaged. Provide photographs or video of conditions that might be misconstrued as damage caused by salvage operations.

3.2 UTILITY SERVICES AND MECHANICAL/ELECTRICAL SYSTEMS

A. Existing Services/Systems to Remain: Maintain services/systems indicated to remain and protect them against damage.

1. Comply with requirements for existing services/systems interruptions specified in Section 011000 "Summary."

B. Existing Services/Systems to Be Removed, Relocated, or Abandoned: Locate, identify, disconnect, and seal or cap off indicated utility services and mechanical/electrical systems serving areas to be selectively demolished.

1. Arrange to shut off indicated utilities with utility companies.
2. If services/systems are required to be removed, relocated, or abandoned, provide temporary services/systems that bypass area of selective demolition and that maintain continuity of services/systems to other parts of building.
3. Disconnect, demolish, and remove fire-suppression systems, plumbing, and HVAC systems, equipment, and components indicated to be removed.

a. Piping to Be Removed: Remove portion of piping indicated to be removed and cap or plug remaining piping with same or compatible piping material.

b. Piping to Be Abandoned in Place: Drain piping and cap or plug piping with same or compatible piping material.
c. Equipment to Be Removed: Disconnect and cap services and remove equipment.
d. Equipment to Be Removed and Reinstalled: Disconnect and cap services and remove, clean, and store equipment; when appropriate, reinstall, reconnect, and make equipment operational.
e. Equipment to Be Removed and Salvaged: Disconnect and cap services and remove equipment and deliver to Owner.
f. Ducts to Be Removed: Remove portion of ducts indicated to be removed and plug remaining ducts with same or compatible ductwork material.
g. Ducts to Be Abandoned in Place: Cap or plug ducts with same or compatible ductwork material.

C. Refrigerant: Remove refrigerant from mechanical equipment to be selectively demolished according to 40 CFR 82 and regulations of authorities having jurisdiction.

3.3 PREPARATION

A. Site Access and Temporary Controls: Conduct selective demolition and debris-removal operations to ensure minimum interference with roads, streets, walks, walkways, and other adjacent occupied and used facilities.

1. Comply with requirements for access and protection specified in Section 015000 "Temporary Facilities and Controls."

B. Temporary Facilities: Provide temporary barricades and other protection required to prevent injury to people and damage to adjacent buildings and facilities to remain.

1. Provide protection to ensure safe passage of people around selective demolition area and to and from occupied portions of building.
2. Provide temporary weather protection, during interval between selective demolition of existing construction on exterior surfaces and new construction, to prevent water leakage and damage to structure and interior areas.
3. Protect walls, ceilings, floors, and other existing finish work that are to remain or that are exposed during selective demolition operations.
4. Cover and protect furniture, furnishings, and equipment that have not been removed.
5. Comply with requirements for temporary enclosures, dust control, heating, and cooling specified in Section 015000 "Temporary Facilities and Controls."

C. Temporary Shoring: Provide and maintain shoring, bracing, and structural supports as required to preserve stability and prevent movement, settlement, or collapse of construction and finishes to remain, and to prevent unexpected or uncontrolled movement or collapse of construction being demolished.

1. Strengthen or add new supports when required during progress of selective demolition.

3.4 SELECTIVE DEMOLITION, GENERAL

A. General: Demolish and remove existing construction only to the extent required by new construction and as indicated. Use methods required to complete the Work within limitations of governing regulations and as follows:

1. Proceed with selective demolition systematically, from higher to lower level. Complete selective demolition operations above each floor or tier before disturbing supporting members on the next lower level.
2. Neatly cut openings and holes plumb, square, and true to dimensions required. Use cutting methods least likely to damage construction to remain or adjoining construction. Use hand tools or small power tools designed for sawing or grinding, not hammering and chopping, to minimize disturbance of adjacent surfaces. Temporarily cover openings to remain.
3. Cut or drill from the exposed or finished side into concealed surfaces to avoid marring existing finished surfaces.
4. Do not use cutting torches until work area is cleared of flammable materials. At concealed spaces, such as duct and pipe interiors, verify condition and contents of hidden space before starting flame-cutting operations. Maintain fire watch and portable fire-suppression devices during flame-cutting operations.
5. Maintain adequate ventilation when using cutting torches.
6. Remove decayed, vermin-infested, or otherwise dangerous or unsuitable materials and promptly dispose of off-site.
7. Remove structural framing members and lower to ground by method suitable to avoid free fall and to prevent ground impact or dust generation.
8. Locate selective demolition equipment and remove debris and materials so as not to impose excessive loads on supporting walls, floors, or framing.
9. Dispose of demolished items and materials promptly. Comply with requirements in Section 017419 "Construction Waste Management and Disposal."

B. Removed and Salvaged Items:

1. Clean salvaged items.
2. Pack or crate items after cleaning. Identify contents of containers.
3. Store items in a secure area until delivery to Owner.
4. Transport items to Owner's storage area designated by Owner.
5. Protect items from damage during transport and storage.

C. Removed and Reinstalled Items:

1. Clean and repair items to functional condition adequate for intended reuse.
2. Pack or crate items after cleaning and repairing. Identify contents of containers.
3. Protect items from damage during transport and storage.
4. Reinstall items in locations indicated. Comply with installation requirements for new materials and equipment. Provide connections, supports, and miscellaneous materials necessary to make item functional for use indicated.

D. Existing Items to Remain: Protect construction indicated to remain against damage and soiling during selective demolition. When permitted by Architect, items may be removed to a suitable, protected storage location during selective demolition and cleaned and reinstalled in their original locations after selective demolition operations are complete.

3.5 SELECTIVE DEMOLITION PROCEDURES FOR SPECIFIC MATERIALS

A. Concrete: Demolish in small sections. Using power-driven saw, cut concrete to a depth of at least 3/4 inch (19 mm) at junctures with construction to remain. Dislodge concrete from reinforcement at perimeter of areas being demolished, cut reinforcement, and then remove remainder of concrete. Neatly trim openings to dimensions indicated.

B. Concrete: Demolish in sections. Cut concrete full depth at junctures with construction to remain and at regular intervals using power-driven saw, then remove concrete between saw cuts.

C. Masonry: Demolish in small sections. Cut masonry at junctures with construction to remain, using power-driven saw, then remove masonry between saw cuts.

D. Concrete Slabs-on-Grade: Saw-cut perimeter of area to be demolished, then break up and remove.

E. Resilient Floor Coverings: Remove floor coverings and adhesive according to recommendations in RFCI's "Recommended Work Practices for the Removal of Resilient Floor Coverings."

F. Roofing: Remove no more existing roofing than what can be covered in one day by new roofing and so that building interior remains watertight and weathertight.

1. Remove existing roof membrane, flashings, copings, and roof accessories.
2. Remove existing roofing system down to substrate.

3.6 DISPOSAL OF DEMOLISHED MATERIALS

A. General: Except for items or materials indicated to be recycled, reused, salvaged, reinstalled, or otherwise indicated to remain Owner's property, remove demolished materials from Project site.

1. Do not allow demolished materials to accumulate on-site.
2. Remove and transport debris in a manner that will prevent spillage on adjacent surfaces and areas.
3. Remove debris from elevated portions of building by chute, hoist, or other device that will convey debris to grade level in a controlled descent.
4. Comply with requirements specified in Section 017419 "Construction Waste Management and Disposal."

B. Burning: Do not burn demolished materials.

C. Disposal: Transport demolished materials off Owner's property and legally dispose of them.

3.7 CLEANING

A. Clean adjacent structures and improvements of dust, dirt, and debris caused by selective demolition operations. Return adjacent areas to condition existing before selective demolition operations began.

END OF SECTION 024119

SECTION 033000 - CAST-IN-PLACE CONCRETE

PART 1 - GENERAL

1.1 RELATED DOCUMENTS

A. Drawings and general provisions of the Contract, including General and Supplementary Conditions and Division 01 Specification Sections, apply to this Section.

1.2 SUMMARY

A. Section includes cast-in-place concrete, including formwork, reinforcement, concrete materials, mixture design, placement procedures, and finishes, for the following:

1. Footings.
2. Foundation walls.
3. Slabs-on-grade.
4. Suspended slabs.
5. Concrete toppings.
6. Miscellaneous concrete elements, including equipment pads.

B. Related Sections:

1. Section 312000 "Earth Moving" for drainage fill under slabs-on-grade.
2. Section 321313 "Concrete Paving" for concrete pavement and walks.
3. Section 321316 "Decorative Concrete Paving" for decorative concrete pavement and walks.

1.3 DEFINITIONS

A. Cementitious Materials: Portland cement alone or in combination with one or more of the following: blended hydraulic cement, fly ash and other pozzolans, ground granulated blast-furnace slag, and silica fume; subject to compliance with requirements.

1.4 ACTION SUBMITTALS

A. Product Data: For each type of product indicated.

B. Design Mixtures: For each concrete mixture. Submit alternate design mixtures when characteristics of materials, Project conditions, weather, test results, or other circumstances warrant adjustments.

1. Indicate amounts of mixing water to be withheld for later addition at Project site.

C. Steel Reinforcement Shop Drawings: Placing drawings that detail fabrication, bending, and placement. Include bar sizes, lengths, material, grade, bar schedules, stirrup spacing, bent bar diagrams, bar arrangement, splices and laps, mechanical connections, tie spacing, hoop spacing, and supports for concrete reinforcement.

1.5 INFORMATIONAL SUBMITTALS

A. Welding certificates.

B. Material Certificates: For each of the following, signed by manufacturers:

1. Cementitious materials.
2. Admixtures.
3. Form materials and form-release agents.
4. Steel reinforcement and accessories.
5. Fiber reinforcement.
6. Waterstops.
7. Curing compounds.
8. Floor and slab treatments.
9. Bonding agents.
10. Adhesives.
11. Vapor retarders.
12. Semirigid joint filler.
13. Joint-filler strips.
14. Repair materials.

C. Material Test Reports: For the following, from a qualified testing agency, indicating compliance with requirements:

1. Aggregates. Include service record data indicating absence of deleterious expansion of concrete due to alkali aggregate reactivity.

D. Floor surface flatness and levelness measurements indicating compliance with specified tolerances.

E. Field quality-control reports.

F. Minutes of preinstallation conference.

1.6 QUALITY ASSURANCE

A. Installer Qualifications: A qualified installer who employs on Project personnel qualified as ACI-certified Flatwork Technician and Finisher and a supervisor who is an ACI-certified Concrete Flatwork Technician.

B. Manufacturer Qualifications: A firm experienced in manufacturing ready-mixed concrete products and that complies with ASTM C 94/C 94M requirements for production facilities and equipment.

1. Manufacturer certified according to NRMCA's "Certification of Ready Mixed Concrete Production Facilities."

C. Testing Agency Qualifications: An independent agency, acceptable to authorities having jurisdiction, qualified according to ASTM C 1077 and ASTM E 329 for testing indicated.

1. Personnel conducting field tests shall be qualified as ACI Concrete Field Testing Technician, Grade 1, according to ACI CP-1 or an equivalent certification program.
2. Personnel performing laboratory tests shall be ACI-certified Concrete Strength Testing Technician and Concrete Laboratory Testing Technician - Grade I. Testing Agency laboratory supervisor shall be an ACI-certified Concrete Laboratory Testing Technician - Grade II.

D. Source Limitations: Obtain each type or class of cementitious material of the same brand from the same manufacturer's plant, obtain aggregate from single source, and obtain admixtures from single source from single manufacturer.

E. ACI Publications: Comply with the following unless modified by requirements in the Contract Documents:

1. ACI 301, "Specifications for Structural Concrete."
2. ACI 117, "Specifications for Tolerances for Concrete Construction and Materials."

F. Concrete Testing Service: Engage a qualified independent testing agency to perform material evaluation tests and to design concrete mixtures.

G. Preinstallation Conference: Conduct conference at Project site.

1. Before submitting design mixtures, review concrete design mixture and examine procedures for ensuring quality of concrete materials. Require representatives of each entity directly concerned with cast-in-place concrete to attend, including the following:

a. Contractor's superintendent.
b. Independent testing agency responsible for concrete design mixtures.
c. Ready-mix concrete manufacturer.
d. Concrete subcontractor.
e. Special concrete finish subcontractor.

2. Review special inspection and testing and inspecting agency procedures for field quality control, concrete finishes and finishing, cold- and hot-weather concreting procedures, curing procedures, construction contraction and isolation joints, and joint-filler strips, semirigid joint fillers, forms and form removal limitations, vapor-retarder installation, anchor rod and anchorage device installation tolerances, steel reinforcement installation, floor and slab flatness and levelness measurement, concrete repair procedures, and concrete protection.

1.7 DELIVERY, STORAGE, AND HANDLING

A. Steel Reinforcement: Deliver, store, and handle steel reinforcement to prevent bending and damage. Avoid damaging coatings on steel reinforcement.

B. Waterstops: Store waterstops under cover to protect from moisture, sunlight, dirt, oil, and other contaminants.

PART 2 - PRODUCTS

2.1 FORM-FACING MATERIALS

A. Smooth-Formed Finished Concrete: Form-facing panels that will provide continuous, true, and smooth concrete surfaces. Furnish in largest practicable sizes to minimize number of joints.

1. Plywood, metal, or other approved panel materials.
2. Exterior-grade plywood panels, suitable for concrete forms, complying with DOC PS 1, and as follows:

a. High-density overlay, Class 1 or better.

b. Medium-density overlay, Class 1 or better; mill-release agent treated and edge sealed.
c. Structural 1, B-B or better; mill oiled and edge sealed.
d. B-B (Concrete Form), Class 1 or better; mill oiled and edge sealed.

B. Rough-Formed Finished Concrete: Plywood, lumber, metal, or another approved material. Provide lumber dressed on at least two edges and one side for tight fit.

C. Forms for Cylindrical Columns, Pedestals, and Supports: Metal, glass-fiber-reinforced plastic, paper, or fiber tubes that will produce surfaces with gradual or abrupt irregularities not exceeding specified formwork surface class. Provide units with sufficient wall thickness to resist plastic concrete loads without detrimental deformation.

D. Pan-Type Forms: Glass-fiber-reinforced plastic or formed steel, stiffened to resist plastic concrete loads without detrimental deformation.

E. Void Forms: Biodegradable paper surface, treated for moisture resistance, structurally sufficient to support weight of plastic concrete and other superimposed loads.

F. Chamfer Strips: Wood, metal, PVC, or rubber strips, 3/4 by 3/4 inch (19 by 19 mm), minimum.

G. Rustication Strips: Wood, metal, PVC, or rubber strips, kerfed for ease of form removal.

H. Form-Release Agent: Commercially formulated form-release agent that will not bond with, stain, or adversely affect concrete surfaces and will not impair subsequent treatments of concrete surfaces.

1. Formulate form-release agent with rust inhibitor for steel form-facing materials.

I. Form Ties: Factory-fabricated, removable or snap-off metal or glass-fiber-reinforced plastic form ties designed to resist lateral pressure of fresh concrete on forms and to prevent spalling of concrete on removal.

1. Furnish units that will leave no corrodible metal closer than 1 inch (25 mm) to the plane of exposed concrete surface.
2. Furnish ties that, when removed, will leave holes no larger than 1 inch (25 mm) in diameter in concrete surface.
3. Furnish ties with integral water-barrier plates to walls indicated to receive dampproofing or waterproofing.

2.2 STEEL REINFORCEMENT

A. Recycled Content of Steel Products: Postconsumer recycled content plus one-half of preconsumer recycled content not less than 25 percent.

B. Reinforcing Bars: ASTM A 615/A 615M, Grade 60 (Grade 420), deformed.

C. Steel Bar Mats: ASTM A 184/A 184M, fabricated from ASTM A 615/A 615M, Grade 60 (Grade 420) deformed bars, assembled with clips.

D. Plain-Steel Wire: ASTM A 82/A 82M, as drawn or galvanized.

E. Deformed-Steel Wire: ASTM A 496/A 496M.

F. Plain-Steel Welded Wire Reinforcement: ASTM A 185/A 185M, plain, fabricated from as-drawn steel wire into flat sheets.

G. Deformed-Steel Welded Wire Reinforcement: ASTM A 497/A 497M, flat sheet.

2.3 REINFORCEMENT ACCESSORIES

A. Bar Supports: Bolsters, chairs, spacers, and other devices for spacing, supporting, and fastening reinforcing bars and welded wire reinforcement in place. Manufacture bar supports from steel wire, plastic, or precast concrete according to CRSI's "Manual of Standard Practice," of greater compressive strength than concrete and as follows:

1. For concrete surfaces exposed to view where legs of wire bar supports contact forms, use CRSI Class 1 plastic-protected steel wire or CRSI Class 2 stainless-steel bar supports.
2. For epoxy-coated reinforcement, use epoxy-coated or other dielectric-polymer-coated wire bar supports.
3. For zinc-coated reinforcement, use galvanized wire or dielectric-polymer-coated wire bar supports.

B. Tie Wire: Annealed, minimum 16 gage

2.4 CONCRETE MATERIALS

A. Cementitious Material: Use the following cementitious materials, of the same type, brand, and source, throughout Project:

1. Portland Cement: ASTM C 150, Type I/II gray. Supplement with the following:

   a. Fly Ash: ASTM C 618, Class F or C.
   b. Ground Granulated Blast-Furnace Slag: ASTM C 989, Grade 100 or 120.

B. Normal-Weight Aggregates: ASTM C 33, Class 3M coarse aggregate or better, graded. Provide aggregates from a single source with documented service record data of at least 10 years' satisfactory service in similar applications and service conditions using similar aggregates and cementitious materials.

1. Maximum Coarse-Aggregate Size: 1 inch (25 mm) nominal.
2. Fine Aggregate: Free of materials with deleterious reactivity to alkali in cement.

C. Water: ASTM C 94/C 94M and potable.

2.5 ADMIXTURES

A. Air-Entraining Admixture: ASTM C 260.

B. Chemical Admixtures: Provide admixtures certified by manufacturer to be compatible with other admixtures and that will not contribute water-soluble chloride ions exceeding those permitted in hardened concrete. Do not use calcium chloride or admixtures containing calcium chloride.

1. Water-Reducing Admixture: ASTM C 494/C 494M, Type A.
2. Retarding Admixture: ASTM C 494/C 494M, Type B.
3. Water-Reducing and Retarding Admixture: ASTM C 494/C 494M, Type D.
4. High-Range, Water-Reducing Admixture: ASTM C 494/C 494M, Type F.

5. High-Range, Water-Reducing and Retarding Admixture: ASTM C 494/C 494M, Type G.
6. Plasticizing and Retarding Admixture: ASTM C 1017/C 1017M, Type II.

2.6 VAPOR RETARDERS

A. Sheet Vapor Retarder: ASTM E 1745, Class A. Include manufacturer's recommended adhesive or pressure-sensitive tape.

1. Products: Subject to compliance with requirements, available products that may be incorporated into the Work include, but are not limited to, the following:

a. Carlisle Coatings & Waterproofing, Inc.; Blackline 400.
b. Fortifiber Building Systems Group; Moistop Ultra.
c. Grace Construction Products, W. R. Grace & Co.; Florprufe 120.
d. Insulation Solutions, Inc.; Viper VaporCheck.
e. Meadows, W. R., Inc.; Perminator.
f. Raven Industries Inc.; Vapor Block.
g. Reef Industries, Inc.; Griffolyn.
h. Stego Industries, LLC; Stego Wrap.

2.7 CURING MATERIALS

A. Evaporation Retarder: Waterborne, monomolecular film forming, manufactured for application to fresh concrete.

1. Products: Subject to compliance with requirements, available products that may be incorporated into the Work include, but are not limited to, the following:

a. Axim Italcementi Group, Inc.; CATEXOL CimFilm.
b. BASF Construction Chemicals - Building Systems; Confilm.
c. ChemMasters; SprayFilm.
d. Conspec by Dayton Superior; Aquafilm.
e. Dayton Superior Corporation; Sure Film (J-74).
f. Edoco by Dayton Superior; BurkeFilm.
g. Euclid Chemical Company (The), an RPM company; Eucobar.
h. Kaufman Products, Inc.; Vapor-Aid.
i. Lambert Corporation; LAMBCO Skin.
j. L&M Construction Chemicals, Inc.; E-CON.
k. Meadows, W. R., Inc.; EVAPRE.
l. Metalcrete Industries; Waterhold.
m. Nox-Crete Products Group; MONOFILM.
n. Sika Corporation; SikaFilm.
o. SpecChem, LLC; Spec Film.
p. Symons by Dayton Superior; Finishing Aid.
q. TK Products, Division of Sierra Corporation; TK-2120 TRI-FILM.
r. Unitex; PRO-FILM.
s. Vexcon Chemicals, Inc.; Certi-Vex Envio Set.

B. Absorptive Cover: AASHTO M 182, Class 2, burlap cloth made from jute or kenaf, weighing approximately 9 oz./sq. yd. (305 g/sq. m) when dry.

C. Moisture-Retaining Cover: ASTM C 171, polyethylene film or white burlap-polyethylene sheet.

D. Water: Potable.

E. Clear, Waterborne, Membrane-Forming Curing Compound: ASTM C 309, Type 1, Class B, dissipating.

1. Products: Subject to compliance with requirements, available products that may be incorporated into the Work include, but are not limited to, the following:

a. Anti-Hydro International, Inc.; AH Curing Compound #2 DR WB.
b. BASF Construction Chemicals - Building Systems; Kure 200.
c. ChemMasters; Safe-Cure Clear.
d. Conspec by Dayton Superior; W.B. Resin Cure.
e. Dayton Superior Corporation; Day-Chem Rez Cure (J-11-W).
f. Edoco by Dayton Superior; Res X Cure WB.
g. Euclid Chemical Company (The), an RPM company; Kurez W VOX; TAMMSCURE WB 30C.
h. Kaufman Products, Inc.; Thinfilm 420.
i. Lambert Corporation; AQUA KURE - CLEAR.
j. L&M Construction Chemicals, Inc.; L&M Cure R.
k. Meadows, W. R., Inc.; 1100-CLEAR.
l. Nox-Crete Products Group; Resin Cure E.
m. Right Pointe; Clear Water Resin.
n. SpecChem, LLC; Spec Rez Clear.
o. Symons by Dayton Superior; Resi-Chem Clear.
p. TK Products, Division of Sierra Corporation; TK-2519 DC WB.
q. Vexcon Chemicals, Inc.; Certi-Vex Enviocure 100.

F. Clear, Waterborne, Membrane-Forming Curing Compound: ASTM C 309, Type 1, Class B, nondissipating, certified by curing compound manufacturer to not interfere with bonding of floor covering.

1. Products: Subject to compliance with requirements, available products that may be incorporated into the Work include, but are not limited to, the following:

a. Anti-Hydro International, Inc.; AH Clear Cure WB.
b. BASF Construction Chemicals - Building Systems; Kure-N-Seal WB.
c. ChemMasters; Safe-Cure & Seal 20.
d. Conspec by Dayton Superior; Cure and Seal WB.
e. Cresset Chemical Company; Crete-Trete 309-VOC Cure & Seal.
f. Dayton Superior Corporation; Safe Cure and Seal (J-18).
g. Edoco by Dayton Superior; Spartan Cote WB II.
h. Euclid Chemical Company (The), an RPM company; Aqua Cure VOX; Clearseal WB 150.
i. Kaufman Products, Inc.; Cure & Seal 309 Emulsion.
j. Lambert Corporation; Glazecote Sealer-20.
k. L&M Construction Chemicals, Inc.; Dress & Seal WB.
l. Meadows, W. R., Inc.; Vocomp-20.
m. Metalcrete Industries; Metcure.
n. Nox-Crete Products Group; Cure & Seal 150E.
o. Symons by Dayton Superior; Cure & Seal 18 Percent E.
p. TK Products, Division of Sierra Corporation; TK-2519 WB.
q. Vexcon Chemicals, Inc.; Starseal 309.

G. Clear, Waterborne, Membrane-Forming Curing Compound: ASTM C 309, Type 1, Class B, 18 to 25 percent solids, nondissipating, certified by curing compound manufacturer to not interfere with bonding of floor covering.

1. Products: Subject to compliance with requirements, available products that may be incorporated into the Work include, but are not limited to, the following:

   a. BASF Construction Chemicals - Building Systems; Kure-N-Seal W.
   b. ChemMasters; Safe-Cure Clear.
   c. Conspec by Dayton Superior; High Seal.
   d. Dayton Superior Corporation; Safe Cure and Seal (J-19).
   e. Edoco by Dayton Superior; Spartan Cote WB II 20 Percent.
   f. Euclid Chemical Company (The), an RPM company; Diamond Clear VOX; Clearseal WB STD.
   g. Kaufman Products, Inc.; SureCure Emulsion.
   h. Lambert Corporation; Glazecote Sealer-20.
   i. L&M Construction Chemicals, Inc.; Dress & Seal WB.
   j. Meadows, W. R., Inc.; Vocomp-20.
   k. Metalcrete Industries; Metcure 0800.
   l. Nox-Crete Products Group; Cure & Seal 200E.
   m. Symons by Dayton Superior; Cure & Seal 18 Percent E.
   n. Vexcon Chemicals, Inc.; Starseal 0800.

H. Clear, Solvent-Borne, Membrane-Forming Curing and Sealing Compound: ASTM C 1315, Type 1, Class A.

1. Products: Subject to compliance with requirements, available products that may be incorporated into the Work include, but are not limited to, the following:

   a. BASF Construction Chemicals - Building Systems; Kure-N-Seal 25 LV.
   b. ChemMasters; Spray-Cure & Seal Plus.
   c. Conspec by Dayton Superior; Sealcure 1315.
   d. Dayton Superior Corporation; Day-Chem Cure and Seal (J-22UV).
   e. Edoco by Dayton Superior; Cureseal 1315.
   f. Euclid Chemical Company (The), an RPM company; Super Diamond Clear; LusterSeal 300.
   g. Kaufman Products, Inc.; Sure Cure 25.
   h. Lambert Corporation; UV Super Seal.
   i. L&M Construction Chemicals, Inc.; Lumiseal Plus.
   j. Meadows, W. R., Inc.; CS-309/30.
   k. Metalcrete Industries; Seal N Kure 30.
   l. Right Pointe; Right Sheen 30.
   m. Vexcon Chemicals, Inc.; Certi-Vex AC 1315.

2. VOC Content: Curing and sealing compounds shall have a VOC content of 200 g/L or less when calculated according to 40 CFR 59, Subpart D (EPA Method 24).

I. Clear, Waterborne, Membrane-Forming Curing and Sealing Compound: ASTM C 1315, Type 1, Class A.

1. Products: Subject to compliance with requirements, available products that may be incorporated into the Work include, but are not limited to, the following:

   a. BASF Construction Chemicals - Building Systems; Kure 1315.
   b. ChemMasters; Polyseal WB.
   c. Conspec by Dayton Superior; Sealcure 1315 WB.
   d. Edoco by Dayton Superior; Cureseal 1315 WB.
   e. Euclid Chemical Company (The), an RPM company; Super Diamond Clear VOX; LusterSeal WB 300.
   f. Kaufman Products, Inc.; Sure Cure 25 Emulsion.

g. Lambert Corporation; UV Safe Seal.
h. L&M Construction Chemicals, Inc.; Lumiseal WB Plus.
i. Meadows, W. R., Inc.; Vocomp-30.
j. Metalcrete Industries; Metcure 30.
k. Right Pointe; Right Sheen WB30.
l. Symons by Dayton Superior; Cure & Seal 31 Percent E.
m. Vexcon Chemicals, Inc.; Vexcon Starseal 1315.

2. VOC Content: Curing and sealing compounds shall have a VOC content of 200 g/L or less when calculated according to 40 CFR 59, Subpart D (EPA Method 24).

2.8 RELATED MATERIALS

A. Expansion- and Isolation-Joint-Filler Strips: ASTM D 1751, asphalt-saturated cellulosic fiber or ASTM D 1752, cork or self-expanding cork.

B. Semirigid Joint Filler: Two-component, semirigid, 100 percent solids, epoxy resin with a Type A shore durometer hardness of 80 or aromatic polyurea with a Type A shore durometer hardness range of 90 to 95 per ASTM D 2240.

C. Bonding Agent: ASTM C 1059/C 1059M, Type II, non-redispersible, acrylic emulsion or styrene butadiene.

D. Epoxy Bonding Adhesive: ASTM C 881, two-component epoxy resin, capable of humid curing and bonding to damp surfaces, of class suitable for application temperature and of grade to suit requirements, and as follows:

1. Types IV and V, load bearing, for bonding hardened or freshly mixed concrete to hardened concrete.

E. Reglets: Fabricate reglets of not less than 0.022-inch- (0.55-mm-) thick, galvanized-steel sheet. Temporarily fill or cover face opening of reglet to prevent intrusion of concrete or debris.

F. Dovetail Anchor Slots: Hot-dip galvanized-steel sheet, not less than 0.034 inch (0.85 mm) thick, with bent tab anchors. Temporarily fill or cover face opening of slots to prevent intrusion of concrete or debris.

2.9 REPAIR MATERIALS

A. Repair Underlayment: Cement-based, polymer-modified, self-leveling product that can be applied in thicknesses from 1/8 inch (3.2 mm) and that can be feathered at edges to match adjacent floor elevations.

1. Cement Binder: ASTM C 150, portland cement or hydraulic or blended hydraulic cement as defined in ASTM C 219.
2. Primer: Product of underlayment manufacturer recommended for substrate, conditions, and application.
3. Aggregate: Well-graded, washed gravel, 1/8 to 1/4 inch (3.2 to 6 mm) or coarse sand as recommended by underlayment manufacturer.
4. Compressive Strength: Not less than 4100 psi (29 MPa) at 28 days when tested according to ASTM C 109/C 109M.

B. Repair Overlayment: Cement-based, polymer-modified, self-leveling product that can be applied in thicknesses from 1/4 inch (6.4 mm) and that can be filled in over a scarified surface to match adjacent floor elevations.

1. Cement Binder: ASTM C 150, portland cement or hydraulic or blended hydraulic cement as defined in ASTM C 219.
2. Primer: Product of topping manufacturer recommended for substrate, conditions, and application.
3. Aggregate: Well-graded, washed gravel, 1/8 to 1/4 inch (3.2 to 6 mm) or coarse sand as recommended by topping manufacturer.
4. Compressive Strength: Not less than 5000 psi (34.5 MPa) at 28 days when tested according to ASTM C 109/C 109M.

2.10 CONCRETE MIXTURES, GENERAL

A. Prepare design mixtures for each type and strength of concrete, proportioned on the basis of laboratory trial mixture or field test data, or both, according to ACI 301.

1. Use a qualified independent testing agency for preparing and reporting proposed mixture designs based on laboratory trial mixtures.

B. Limit water-soluble, chloride-ion content in hardened concrete to 0.30 percent by weight of cement.

C. Admixtures: Use admixtures according to manufacturer's written instructions.

1. Use water-reducing, high-range water-reducing or plasticizing admixture in concrete, as required, for placement and workability.
2. Use water-reducing and retarding admixture when required by high temperatures, low humidity, or other adverse placement conditions.
3. Use water-reducing admixture in pumped concrete, concrete for heavy-use industrial slabs and parking structure slabs, concrete required to be watertight, and concrete with a water-cementitious materials ratio below 0.50.

D. Color Pigment: Add color pigment to concrete mixture according to manufacturer's written instructions and to result in hardened concrete color consistent with approved mockup.

2.11 CONCRETE MIXTURES FOR BUILDING ELEMENTS

A. Footings: Proportion normal-weight concrete mixture as follows:

1. Minimum Compressive Strength: 3000 psi (20.7 MPa) at 28 days.
2. Maximum Water-Cementitious Materials Ratio: 0.50.
3. Slump Limit: 4 inches (100 mm) for concrete with verified slump of 2 to 4 inches (50 to 100 mm) before adding high-range water-reducing admixture or plasticizing admixture, plus or minus 1 inch (25 mm).
4. Air Content: 5.5 percent, plus or minus 1.5 percent at point of delivery for 1-1/2-inch (38-mm) nominal maximum aggregate size.

B. Foundation Walls and Piers: Proportion normal-weight concrete mixture as follows:

1. Minimum Compressive Strength: 4000 psi (27.6 MPa) at 28 days.
2. Maximum Water-Cementitious Materials Ratio: 0.45.
3. Slump Limit: 4 inches (100 mm) for concrete with verified slump of 2 to 4 inches (50 to 100 mm) before adding high-range water-reducing admixture or plasticizing admixture, plus or minus 1 inch (25 mm).
4. Air Content: 5.5 percent, plus or minus 1.5 percent at point of delivery for 1-1/2-inch (38-mm) nominal maximum aggregate size.

C. Slabs-on-Grade: Proportion normal-weight concrete mixture as follows:

1. Minimum Compressive Strength: 5000 psi exterior and 4000 psi (27.6 MPa) interior at 28 days.
2. Maximum Water-Cementitious Materials Ratio: 0.45.
3. Slump Limit: 4 inches (100 mm), plus or minus 1 inch (25 mm).
4. Air Content: 5.5 percent, plus or minus 1.5 percent at point of delivery for 1-1/2-inch (38-mm) nominal maximum aggregate size.
5. Air Content: Do not allow air content of trowel-finished floors to exceed 3 percent.

D. Suspended Slabs: Proportion normal-weight concrete mixture as follows:

1. Minimum Compressive Strength: 4000 psi (27.6 MPa) at 28 days.
2. Minimum Cementitious Materials Content: 520 lb./cu. yd. (309 kg/cu. m).
3. Slump Limit: 4 inches (100 mm), plus or minus 1 inch (25 mm).
4. Air Content: 5.5 percent, plus or minus 1.5 percent at point of delivery for 1-1/2-inch (38-mm) nominal maximum aggregate size.
5. Air Content: Do not allow air content of trowel-finished floors to exceed 3 percent.

2.12 CONCRETE MIXTURE FOR MISCELLANEOUS CONCRETE ELEMENTS

A. Generator Foundation: Proportion normal-weight concrete mixture as follows:

1. Minimum Compressive Strength: 4500 psi (27.6 MPa) interior at 28 days.
2. Maximum Water-Cementitious Materials Ratio: 0.45.
3. Slump Limit: 4 inches (100 mm),plus or minus 1 inch (25 mm).
4. Air Content: 5.5 percent, plus or minus 1.5 percent at point of delivery for 1-1/2-inch (38-mm) nominal maximum aggregate size.
5. Air Content: Do not allow air content of trowel-finished floors to exceed 3 percent.
6. Form finish with honeycomb filled side surfaces, level float finish top surface.

B. Conduit Duct Bank: Proportion normal-weight concrete mixture as follows:

1. Minimum Compressive Strength: 3000 psi (27.6 MPa) interior at 28 days.
2. Maximum Water-Cementitious Materials Ratio: 0.45.
3. Slump Limit: 4 inches (100 mm),plus or minus 1 inch (25 mm).
4. Side surfaces cast against earth or forms, level top surface with red pigment.

C. Condensing Unit Pad: Proportion normal-weight concrete mixture as follows:

1. Minimum Compressive Strength: 4500 psi (27.6 MPa) interior at 28 days.
2. Maximum Water-Cementitious Materials Ratio: 0.45.
3. Slump Limit: 4 inches (100 mm),plus or minus 1 inch (25 mm).
4. Form finish with honeycomb exposed side surfaces, level broom finish top surface.

D. Interior Housekeeping Pads: Proportion normal-weight concrete mixture as follows:

1. Minimum Compressive Strength: 4000 psi (27.6 MPa) interior at 28 days.
2. Maximum Water-Cementitious Materials Ratio: 0.45.
3. Slump Limit: 4 inches (100 mm),plus or minus 1 inch (25 mm).
4. Form finish with honeycomb filled side surfaces, hard troweled finish top surface.
5.

2.13 FABRICATING REINFORCEMENT

A. Fabricate steel reinforcement according to CRSI's "Manual of Standard Practice."

2.14 CONCRETE MIXING

A. Ready-Mixed Concrete: Measure, batch, mix, and deliver concrete according to ASTM C 94/C 94M and ASTM C 1116/C 1116M, and furnish batch ticket information.

1. When air temperature is between 85 and 90 deg F (30 and 32 deg C), reduce mixing and delivery time from 1-1/2 hours to 75 minutes; when air temperature is above 90 deg F (32 deg C), reduce mixing and delivery time to 60 minutes.

B. Project-Site Mixing: Measure, batch, and mix concrete materials and concrete according to ASTM C 94/C 94M. Mix concrete materials in appropriate drum-type batch machine mixer.

1. For mixer capacity of 1 cu. yd. (0.76 cu. m) or smaller, continue mixing at least 1-1/2 minutes, but not more than 5 minutes after ingredients are in mixer, before any part of batch is released.
2. For mixer capacity larger than 1 cu. yd. (0.76 cu. m), increase mixing time by 15 seconds for each additional 1 cu. yd. (0.76 cu. m).
3. Provide batch ticket for each batch discharged and used in the Work, indicating Project identification name and number, date, mixture type, mixture time, quantity, and amount of water added. Record approximate location of final deposit in structure.

PART 3 - EXECUTION

3.1 FORMWORK

A. Design, erect, shore, brace, and maintain formwork, according to ACI 301, to support vertical, lateral, static, and dynamic loads, and construction loads that might be applied, until structure can support such loads.

B. Construct formwork so concrete members and structures are of size, shape, alignment, elevation, and position indicated, within tolerance limits of ACI 117.

C. Limit concrete surface irregularities, designated by ACI 347 as abrupt or gradual, as follows:

1. Class A, 1/8 inch (3.2 mm) for smooth-formed finished surfaces.
2. Class B, 1/4 inch (6 mm) for rough-formed finished surfaces.

D. Construct forms tight enough to prevent loss of concrete mortar.

E. Fabricate forms for easy removal without hammering or prying against concrete surfaces. Provide crush or wrecking plates where stripping may damage cast concrete surfaces. Provide top forms for inclined surfaces steeper than 1.5 horizontal to 1 vertical.

1. Install keyways, reglets, recesses, and the like, for easy removal.
2. Do not use rust-stained steel form-facing material.

F. Set edge forms, bulkheads, and intermediate screed strips for slabs to achieve required elevations and slopes in finished concrete surfaces. Provide and secure units to support screed strips; use strike-off templates or compacting-type screeds.

G. Provide temporary openings for cleanouts and inspection ports where interior area of formwork is inaccessible. Close openings with panels tightly fitted to forms and securely braced to prevent loss of concrete mortar. Locate temporary openings in forms at inconspicuous locations.

H. Chamfer exterior corners and edges of permanently exposed concrete.

I. Form openings, chases, offsets, sinkages, keyways, reglets, blocking, screeds, and bulkheads required in the Work. Determine sizes and locations from trades providing such items.

J. Clean forms and adjacent surfaces to receive concrete. Remove chips, wood, sawdust, dirt, and other debris just before placing concrete.

K. Retighten forms and bracing before placing concrete, as required, to prevent mortar leaks and maintain proper alignment.

L. Coat contact surfaces of forms with form-release agent, according to manufacturer's written instructions, before placing reinforcement.

3.2 EMBEDDED ITEMS

A. Place and secure anchorage devices and other embedded items required for adjoining work that is attached to or supported by cast-in-place concrete. Use setting drawings, templates, diagrams, instructions, and directions furnished with items to be embedded.

1. Install anchor rods, accurately located, to elevations required and complying with tolerances in Section 7.5 of AISC's "Code of Standard Practice for Steel Buildings and Bridges."
2. Install reglets to receive waterproofing and to receive through-wall flashings in outer face of concrete frame at exterior walls, where flashing is shown at lintels, shelf angles, and other conditions.
3. Install dovetail anchor slots in concrete structures as indicated.

3.3 REMOVING AND REUSING FORMS

A. General: Formwork for sides of beams, walls, columns, and similar parts of the Work that does not support weight of concrete may be removed after cumulatively curing at not less than 50 deg F (10 deg C) for 24 hours after placing concrete. Concrete has to be hard enough to not be damaged by form-removal operations and curing and protection operations need to be maintained.

1. Leave formwork for beam soffits, joists, slabs, and other structural elements that supports weight of concrete in place until concrete has achieved at least 70 percent of its 28-day design compressive strength.
2. Remove forms only if shores have been arranged to permit removal of forms without loosening or disturbing shores.

B. Clean and repair surfaces of forms to be reused in the Work. Split, frayed, delaminated, or otherwise damaged form-facing material will not be acceptable for exposed surfaces. Apply new form-release agent.

C. When forms are reused, clean surfaces, remove fins and laitance, and tighten to close joints. Align and secure joints to avoid offsets. Do not use patched forms for exposed concrete surfaces unless approved by Architect.

3.4 SHORES AND RESHORES

A. Comply with ACI 318 (ACI 318M) and ACI 301 for design, installation, and removal of shoring and reshoring.

1. Do not remove shoring or reshoring until measurement of slab tolerances is complete.

B. In multistory construction, extend shoring or reshoring over a sufficient number of stories to distribute loads in such a manner that no floor or member will be excessively loaded or will induce tensile stress in concrete members without sufficient steel reinforcement.

C. Plan sequence of removal of shores and reshore to avoid damage to concrete. Locate and provide adequate reshoring to support construction without excessive stress or deflection.

3.5 VAPOR RETARDERS

A. Sheet Vapor Retarders: Place, protect, and repair sheet vapor retarder according to ASTM E 1643 and manufacturer's written instructions.

1. Lap joints 6 inches (150 mm) and seal with manufacturer's recommended tape.

B. Bituminous Vapor Retarders: Place, protect, and repair bituminous vapor retarder according to manufacturer's written instructions.

3.6 STEEL REINFORCEMENT

A. General: Comply with CRSI's "Manual of Standard Practice" for placing reinforcement.

1. Do not cut or puncture vapor retarder. Repair damage and reseal vapor retarder before placing concrete.

B. Clean reinforcement of loose rust and mill scale, earth, ice, and other foreign materials that would reduce bond to concrete.

C. Accurately position, support, and secure reinforcement against displacement. Locate and support reinforcement with bar supports to maintain minimum concrete cover. Do not tack weld crossing reinforcing bars.

1. Weld reinforcing bars according to AWS D1.4/D 1.4M, where indicated.

D. Set wire ties with ends directed into concrete, not toward exposed concrete surfaces.

E. Install welded wire reinforcement in longest practicable lengths on bar supports spaced to minimize sagging. Lap edges and ends of adjoining sheets at least one mesh spacing. Offset laps of adjoining sheet widths to prevent continuous laps in either direction. Lace overlaps with wire.

F. Epoxy-Coated Reinforcement: Repair cut and damaged epoxy coatings with epoxy repair coating according to ASTM D 3963/D 3963M. Use epoxy-coated steel wire ties to fasten epoxy-coated steel reinforcement.

G. Zinc-Coated Reinforcement: Repair cut and damaged zinc coatings with zinc repair material according to ASTM A 780. Use galvanized steel wire ties to fasten zinc-coated steel reinforcement.

3.7 JOINTS

A. General: Construct joints true to line with faces perpendicular to surface plane of concrete.

B. Construction Joints: Install so strength and appearance of concrete are not impaired, at locations indicated or as approved by Architect.

1. Place joints perpendicular to main reinforcement. Continue reinforcement across construction joints unless otherwise indicated. Do not continue reinforcement through sides of strip placements of floors and slabs.
2. Form keyed joints as indicated. Embed keys at least 1-1/2 inches (38 mm) into concrete.
3. Locate joints for beams, slabs, joists, and girders in the middle third of spans. Offset joints in girders a minimum distance of twice the beam width from a beam-girder intersection.
4. Locate horizontal joints in walls and columns at underside of floors, slabs, beams, and girders and at the top of footings or floor slabs.
5. Space vertical joints in walls as indicated. Locate joints beside piers integral with walls, near corners, and in concealed locations where possible.
6. Use a bonding agent at locations where fresh concrete is placed against hardened or partially hardened concrete surfaces.
7. Use epoxy-bonding adhesive at locations where fresh concrete is placed against hardened or partially hardened concrete surfaces.

C. Contraction Joints in Slabs-on-Grade: Form weakened-plane contraction joints, sectioning concrete into areas as indicated. Construct contraction joints for a depth equal to at least one-fourth of concrete thickness as follows:

1. Grooved Joints: Form contraction joints after initial floating by grooving and finishing each edge of joint to a radius of 1/8 inch (3.2 mm). Repeat grooving of contraction joints after applying surface finishes. Eliminate groover tool marks on concrete surfaces.
2. Sawed Joints: Form contraction joints with power saws equipped with shatterproof abrasive or diamond-rimmed blades. Cut 1/8-inch- (3.2-mm-) wide joints into concrete when cutting action will not tear, abrade, or otherwise damage surface and before concrete develops random contraction cracks.

D. Isolation Joints in Slabs-on-Grade: After removing formwork, install joint-filler strips at slab junctions with vertical surfaces, such as column pedestals, foundation walls, grade beams, and other locations, as indicated.

1. Extend joint-filler strips full width and depth of joint, terminating flush with finished concrete surface unless otherwise indicated.
2. Terminate full-width joint-filler strips not less than 1/2 inch (13 mm) or more than 1 inch (25 mm) below finished concrete surface where joint sealants, specified in Section 079200 "Joint Sealants," are indicated.
3. Install joint-filler strips in lengths as long as practicable. Where more than one length is required, lace or clip sections together.

E. Doweled Joints: Install dowel bars and support assemblies at joints where indicated. Lubricate or asphalt coat one-half of dowel length to prevent concrete bonding to one side of joint.

3.8 CONCRETE PLACEMENT

A. Before placing concrete, verify that installation of formwork, reinforcement, and embedded items is complete and that required inspections have been performed.

B. Do not add water to concrete during delivery, at Project site, or during placement unless approved by Architect.

C. Before test sampling and placing concrete, water may be added at Project site, subject to limitations of ACI 301.

1. Do not add water to concrete after adding high-range water-reducing admixtures to mixture.

D. Deposit concrete continuously in one layer or in horizontal layers of such thickness that no new concrete will be placed on concrete that has hardened enough to cause seams or planes of weakness. If a section cannot be placed continuously, provide construction joints as indicated. Deposit concrete to avoid segregation.

1. Deposit concrete in horizontal layers of depth to not exceed formwork design pressures and in a manner to avoid inclined construction joints.
2. Consolidate placed concrete with mechanical vibrating equipment according to ACI 301.
3. Do not use vibrators to transport concrete inside forms. Insert and withdraw vibrators vertically at uniformly spaced locations to rapidly penetrate placed layer and at least 6 inches (150 mm) into preceding layer. Do not insert vibrators into lower layers of concrete that have begun to lose plasticity. At each insertion, limit duration of vibration to time necessary to consolidate concrete and complete embedment of reinforcement and other embedded items without causing mixture constituents to segregate.

E. Deposit and consolidate concrete for floors and slabs in a continuous operation, within limits of construction joints, until placement of a panel or section is complete.

1. Consolidate concrete during placement operations so concrete is thoroughly worked around reinforcement and other embedded items and into corners.
2. Maintain reinforcement in position on chairs during concrete placement.
3. Screed slab surfaces with a straightedge and strike off to correct elevations.
4. Slope surfaces uniformly to drains where required.
5. Begin initial floating using bull floats or darbies to form a uniform and open-textured surface plane, before excess bleedwater appears on the surface. Do not further disturb slab surfaces before starting finishing operations.

F. Cold-Weather Placement: Comply with ACI 306.1 and as follows. Protect concrete work from physical damage or reduced strength that could be caused by frost, freezing actions, or low temperatures.

1. When average high and low temperature is expected to fall below 40 deg F (4.4 deg C) for three successive days, maintain delivered concrete mixture temperature within the temperature range required by ACI 301.
2. Do not use frozen materials or materials containing ice or snow. Do not place concrete on frozen subgrade or on subgrade containing frozen materials.
3. Do not use calcium chloride, salt, or other materials containing antifreeze agents or chemical accelerators unless otherwise specified and approved in mixture designs.

G. Hot-Weather Placement: Comply with ACI 301 and as follows:

1. Maintain concrete temperature below 90 deg F (32 deg C) at time of placement. Chilled mixing water or chopped ice may be used to control temperature, provided water equivalent of ice is calculated to total amount of mixing water. Using liquid nitrogen to cool concrete is Contractor's option.
2. Fog-spray forms, steel reinforcement, and subgrade just before placing concrete. Keep subgrade uniformly moist without standing water, soft spots, or dry areas.

3.9 FINISHING FORMED SURFACES

A. Rough-Formed Finish: As-cast concrete texture imparted by form-facing material with tie holes and defects repaired and patched. Remove fins and other projections that exceed specified limits on formed-surface irregularities.

1. Apply to concrete surfaces not exposed to public view.

B. Smooth-Formed Finish: As-cast concrete texture imparted by form-facing material, arranged in an orderly and symmetrical manner with a minimum of seams. Repair and patch tie holes and defects. Remove fins and other projections that exceed specified limits on formed-surface irregularities.

1. Apply to concrete surfaces exposed to public view, to receive a rubbed finish, to be covered with a coating or covering material applied directly to concrete.

C. Rubbed Finish: Apply the following to smooth-formed finished as-cast concrete where indicated:

1. Smooth-Rubbed Finish: Not later than one day after form removal, moisten concrete surfaces and rub with carborundum brick or another abrasive until producing a uniform color and texture. Do not apply cement grout other than that created by the rubbing process.
2. Grout-Cleaned Finish: Wet concrete surfaces and apply grout of a consistency of thick paint to coat surfaces and fill small holes. Mix one part portland cement to one and one-half parts fine sand with a 1:1 mixture of bonding admixture and water. Add white portland cement in amounts determined by trial patches so color of dry grout will match adjacent surfaces. Scrub grout into voids and remove excess grout. When grout whitens, rub surface with clean burlap and keep surface damp by fog spray for at least 36 hours.
3. Cork-Floated Finish: Wet concrete surfaces and apply a stiff grout. Mix one part portland cement and one part fine sand with a 1:1 mixture of bonding agent and water. Add white portland cement in amounts determined by trial patches so color of dry grout will match adjacent surfaces. Compress grout into voids by grinding surface. In a swirling motion, finish surface with a cork float.

D. Related Unformed Surfaces: At tops of walls, horizontal offsets, and similar unformed surfaces adjacent to formed surfaces, strike off smooth and finish with a texture matching adjacent formed surfaces. Continue final surface treatment of formed surfaces uniformly across adjacent unformed surfaces unless otherwise indicated.

3.10 FINISHING FLOORS AND SLABS

A. General: Comply with ACI 302.1R recommendations for screeding, restraightening, and finishing operations for concrete surfaces. Do not wet concrete surfaces.

B. Scratch Finish: While still plastic, texture concrete surface that has been screeded and bull-floated or darbied. Use stiff brushes, brooms, or rakes to produce a profile amplitude of 1/4 inch (6 mm) in one direction.

1. Apply scratch finish to surfaces indicated and to receive concrete floor toppings and to receive mortar setting beds for bonded cementitious floor finishes.

C. Float Finish: Consolidate surface with power-driven floats or by hand floating if area is small or inaccessible to power driven floats. Restraighten, cut down high spots, and fill low spots. Repeat float passes and restraightening until surface is left with a uniform, smooth, granular texture.

1. Apply float finish to surfaces indicated to receive trowel finish and to be covered with fluid-applied or sheet waterproofing, built-up or membrane roofing, or sand-bed terrazzo.

D. Trowel Finish: After applying float finish, apply first troweling and consolidate concrete by hand or power-driven trowel. Continue troweling passes and restraighten until surface is free of trowel marks and uniform in texture and appearance. Grind smooth any surface defects that would telegraph through applied coatings or floor coverings.

1. Apply a trowel finish to surfaces indicated and exposed to view or to be covered with resilient flooring, carpet, ceramic or quarry tile set over a cleavage membrane, paint, or another thin-film-finish coating system.
2. Finish surfaces to the following tolerances, according to ASTM E 1155 (ASTM E 1155M), for a randomly trafficked floor surface:

   a. Specified overall values of flatness, F(F) 35; and of levelness, F(L) 25; with minimum local values of flatness, F(F) 24; and of levelness, F(L) 17; for slabs-on-grade.
   b. Specified overall values of flatness, F(F) 30; and of levelness, F(L) 20; with minimum local values of flatness, F(F) 24; and of levelness, F(L) 15; for suspended slabs.

E. Trowel and Fine-Broom Finish: Apply a first trowel finish to surfaces indicated and to where ceramic or quarry tile is to be installed by either thickset or thin-set method. While concrete is still plastic, slightly scarify surface with a fine broom.

1. Comply with flatness and levelness tolerances for trowel-finished floor surfaces.

F. Broom Finish: Apply a broom finish to exterior concrete platforms, steps, ramps, and elsewhere as indicated.

1. Immediately after float finishing, slightly roughen trafficked surface by brooming with fiber-bristle broom perpendicular to main traffic route. Coordinate required final finish with Architect before application.

3.11 MISCELLANEOUS CONCRETE ITEMS

A. Filling In: Fill in holes and openings left in concrete structures after work of other trades is in place unless otherwise indicated. Mix, place, and cure concrete, as specified, to blend with in-place construction. Provide other miscellaneous concrete filling indicated or required to complete the Work.

B. Curbs: Provide monolithic finish to interior curbs by stripping forms while concrete is still green and by steel-troweling surfaces to a hard, dense finish with corners, intersections, and terminations slightly rounded.

C. Equipment Bases and Foundations:

1. Coordinate sizes and locations of concrete bases with actual equipment provided.
2. Construct concrete bases 6 inches ((150 mm) high unless otherwise indicated; and extend base not less than 6 inches (150 mm) in each direction beyond the maximum dimensions of supported equipment unless otherwise indicated or unless required for seismic anchor support.
3. Minimum Compressive Strength: 4500 psi (31 MPa) at 28 days.
4. Install dowel rods to connect concrete base to concrete floor. Unless otherwise indicated, install dowel rods on 18-inch (450-mm) centers around the full perimeter of concrete base.
5. For supported equipment, install epoxy-coated anchor bolts that extend through concrete base, and anchor into structural concrete substrate.

6. Prior to pouring concrete, place and secure anchorage devices. Use setting drawings, templates, diagrams, instructions, and directions furnished with items to be embedded.
7. Cast anchor-bolt insert into bases. Install anchor bolts to elevations required for proper attachment to supported equipment.

D. Steel Pan Stairs: Provide concrete fill for steel pan stair treads, landings, and associated items. Cast-in inserts and accessories as shown on Drawings. Screed, tamp, and trowel finish concrete surfaces.

3.12 CONCRETE PROTECTING AND CURING

A. General: Protect freshly placed concrete from premature drying and excessive cold or hot temperatures. Comply with ACI 306.1 for cold-weather protection and ACI 301 for hot-weather protection during curing.

B. Evaporation Retarder: Apply evaporation retarder to unformed concrete surfaces if hot, dry, or windy conditions cause moisture loss approaching 0.2 lb/sq. ft. x h (1 kg/sq. m x h) before and during finishing operations. Apply according to manufacturer's written instructions after placing, screeding, and bull floating or darbying concrete, but before float finishing.

C. Formed Surfaces: Cure formed concrete surfaces, including underside of beams, supported slabs, and other similar surfaces. If forms remain during curing period, moist cure after loosening forms. If removing forms before end of curing period, continue curing for the remainder of the curing period.

D. Unformed Surfaces: Begin curing immediately after finishing concrete. Cure unformed surfaces, including floors and slabs, concrete floor toppings, and other surfaces.

E. Cure concrete according to ACI 308.1, by one or a combination of the following methods:

1. Moisture Curing: Keep surfaces continuously moist for not less than seven days with the following materials:

   a. Water.
   b. Continuous water-fog spray.
   c. Absorptive cover, water saturated, and kept continuously wet. Cover concrete surfaces and edges with 12-inch (300-mm) lap over adjacent absorptive covers.

2. Moisture-Retaining-Cover Curing: Cover concrete surfaces with moisture-retaining cover for curing concrete, placed in widest practicable width, with sides and ends lapped at least 12 inches (300 mm), and sealed by waterproof tape or adhesive. Cure for not less than seven days. Immediately repair any holes or tears during curing period using cover material and waterproof tape.

   a. Moisture cure or use moisture-retaining covers to cure concrete surfaces to receive floor coverings.
   b. Moisture cure or use moisture-retaining covers to cure concrete surfaces to receive penetrating liquid floor treatments.
   c. Cure concrete surfaces to receive floor coverings with either a moisture-retaining cover or a curing compound that the manufacturer certifies will not interfere with bonding of floor covering used on Project.

3. Curing Compound: Apply uniformly in continuous operation by power spray or roller according to manufacturer's written instructions. Recoat areas subjected to heavy rainfall within three hours after initial application. Maintain continuity of coating and repair damage during curing period.

a. Removal: After curing period has elapsed, remove curing compound without damaging concrete surfaces by method recommended by curing compound manufacturer unless manufacturer certifies curing compound will not interfere with bonding of floor covering used on Project.

4. Curing and Sealing Compound: Apply uniformly to floors and slabs indicated in a continuous operation by power spray or roller according to manufacturer's written instructions. Recoat areas subjected to heavy rainfall within three hours after initial application. Repeat process 24 hours later and apply a second coat. Maintain continuity of coating and repair damage during curing period.

3.13 JOINT FILLING

A. Prepare, clean, and install joint filler according to manufacturer's written instructions.

1. Defer joint filling until concrete has aged at least six month(s). Do not fill joints until construction traffic has permanently ceased.

B. Remove dirt, debris, saw cuttings, curing compounds, and sealers from joints; leave contact faces of joint clean and dry.

C. Install semirigid joint filler full depth in saw-cut joints and at least 2 inches (50 mm) deep in formed joints. Overfill joint and trim joint filler flush with top of joint after hardening.

3.14 CONCRETE SURFACE REPAIRS

A. Defective Concrete: Repair and patch defective areas when approved by Architect. Remove and replace concrete that cannot be repaired and patched to Architect's approval.

B. Patching Mortar: Mix dry-pack patching mortar, consisting of one part portland cement to two and one-half parts fine aggregate passing a No. 16 (1.18-mm) sieve, using only enough water for handling and placing.

C. Repairing Formed Surfaces: Surface defects include color and texture irregularities, cracks, spalls, air bubbles, honeycombs, rock pockets, fins and other projections on the surface, and stains and other discolorations that cannot be removed by cleaning.

1. Immediately after form removal, cut out honeycombs, rock pockets, and voids more than 1/2 inch (13 mm) in any dimension to solid concrete. Limit cut depth to 3/4 inch (19 mm). Make edges of cuts perpendicular to concrete surface. Clean, dampen with water, and brush-coat holes and voids with bonding agent. Fill and compact with patching mortar before bonding agent has dried. Fill form-tie voids with patching mortar or cone plugs secured in place with bonding agent.
2. Repair defects on surfaces exposed to view by blending white portland cement and standard portland cement so that, when dry, patching mortar will match surrounding color. Patch a test area at inconspicuous locations to verify mixture and color match before proceeding with patching. Compact mortar in place and strike off slightly higher than surrounding surface.
3. Repair defects on concealed formed surfaces that affect concrete's durability and structural performance as determined by Architect.

D. Repairing Unformed Surfaces: Test unformed surfaces, such as floors and slabs, for finish and verify surface tolerances specified for each surface. Correct low and high areas. Test surfaces sloped to drain for trueness of slope and smoothness; use a sloped template.

1. Repair finished surfaces containing defects. Surface defects include spalls, popouts, honeycombs, rock pockets, crazing and cracks in excess of 0.01 inch (0.25 mm) wide or that penetrate to reinforcement or completely through unreinforced sections regardless of width, and other objectionable conditions.
2. After concrete has cured at least 14 days, correct high areas by grinding.
3. Correct localized low areas during or immediately after completing surface finishing operations by cutting out low areas and replacing with patching mortar. Finish repaired areas to blend into adjacent concrete.
4. Correct other low areas scheduled to receive floor coverings with a repair underlayment. Prepare, mix, and apply repair underlayment and primer according to manufacturer's written instructions to produce a smooth, uniform, plane, and level surface. Feather edges to match adjacent floor elevations.
5. Correct other low areas scheduled to remain exposed with a repair topping. Cut out low areas to ensure a minimum repair topping depth of 1/4 inch (6 mm) to match adjacent floor elevations. Prepare, mix, and apply repair topping and primer according to manufacturer's written instructions to produce a smooth, uniform, plane, and level surface.
6. Repair defective areas, except random cracks and single holes 1 inch (25 mm) or less in diameter, by cutting out and replacing with fresh concrete. Remove defective areas with clean, square cuts and expose steel reinforcement with at least a 3/4-inch (19-mm) clearance all around. Dampen concrete surfaces in contact with patching concrete and apply bonding agent. Mix patching concrete of same materials and mixture as original concrete except without coarse aggregate. Place, compact, and finish to blend with adjacent finished concrete. Cure in same manner as adjacent concrete.
7. Repair random cracks and single holes 1 inch (25 mm) or less in diameter with patching mortar. Groove top of cracks and cut out holes to sound concrete and clean off dust, dirt, and loose particles. Dampen cleaned concrete surfaces and apply bonding agent. Place patching mortar before bonding agent has dried. Compact patching mortar and finish to match adjacent concrete. Keep patched area continuously moist for at least 72 hours.

E. Perform structural repairs of concrete, subject to Architect's approval, using epoxy adhesive and patching mortar.

F. Repair materials and installation not specified above may be used, subject to Architect's approval.

3.15 FIELD QUALITY CONTROL

A. Testing and Inspecting: Owner will engage a special inspector and qualified testing and inspecting agency to perform field tests and inspections and prepare test reports.

B. Testing and Inspecting: Engage a qualified testing and inspecting agency to perform tests and inspections and to submit reports.

C. Inspections:

1. Steel reinforcement placement.
2. Steel reinforcement welding.
3. Headed bolts and studs.
4. Verification of use of required design mixture.
5. Concrete placement, including conveying and depositing.
6. Curing procedures and maintenance of curing temperature.
7. Verification of concrete strength before removal of shores and forms from beams and slabs.

D. Concrete Tests: Testing of composite samples of fresh concrete obtained according to ASTM C 172 shall be performed according to the following requirements:

1. Testing Frequency: Obtain one composite sample for each day's pour of each concrete mixture exceeding 5 cu. yd. (4 cu. m), but less than 25 cu. yd. (19 cu. m), plus one set for each additional 50 cu. yd. (38 cu. m) or fraction thereof.
2. Testing Frequency: Obtain at least one composite sample for each 100 cu. yd. (76 cu. m) or fraction thereof of each concrete mixture placed each day.

    a. When frequency of testing will provide fewer than five compressive-strength tests for each concrete mixture, testing shall be conducted from at least five randomly selected batches or from each batch if fewer than five are used.

3. Slump: ASTM C 143/C 143M; one test at point of placement for each composite sample, but not less than one test for each day's pour of each concrete mixture. Perform additional tests when concrete consistency appears to change.
4. Air Content: ASTM C 231, pressure method, for normal-weight concrete; ASTM C 173/C 173M, volumetric method, for structural lightweight concrete; one test for each composite sample, but not less than one test for each day's pour of each concrete mixture.
5. Concrete Temperature: ASTM C 1064/C 1064M; one test hourly when air temperature is 40 deg F (4.4 deg C) and below and when 80 deg F (27 deg C) and above, and one test for each composite sample.
6. Unit Weight: ASTM C 567, fresh unit weight of structural lightweight concrete; one test for each composite sample, but not less than one test for each day's pour of each concrete mixture.
7. Compression Test Specimens: ASTM C 31/C 31M.

    a. Cast and laboratory cure two sets of two standard cylinder specimens for each composite sample.
    b. Cast and field cure two sets of two standard cylinder specimens for each composite sample.

8. Compressive-Strength Tests: ASTM C 39/C 39M; test one set of two laboratory-cured specimens at 7 days and one set of two specimens at 28 days.

    a. Test one set of two field-cured specimens at 7 days and one set of two specimens at 28 days.
    b. A compressive-strength test shall be the average compressive strength from a set of two specimens obtained from same composite sample and tested at age indicated.

9. When strength of field-cured cylinders is less than 85 percent of companion laboratory-cured cylinders, Contractor shall evaluate operations and provide corrective procedures for protecting and curing in-place concrete.
10. Strength of each concrete mixture will be satisfactory if every average of any three consecutive compressive-strength tests equals or exceeds specified compressive strength and no compressive-strength test value falls below specified compressive strength by more than 500 psi (3.4 MPa).
11. Test results shall be reported in writing to Architect, concrete manufacturer, and Contractor within 48 hours of testing. Reports of compressive-strength tests shall contain Project identification name and number, date of concrete placement, name of concrete testing and inspecting agency, location of concrete batch in Work, design compressive strength at 28 days, concrete mixture proportions and materials, compressive breaking strength, and type of break for both 7- and 28-day tests.
12. Nondestructive Testing: Impact hammer, sonoscope, or other nondestructive device may be permitted by Architect but will not be used as sole basis for approval or rejection of concrete.
13. Additional Tests: Testing and inspecting agency shall make additional tests of concrete when test results indicate that slump, air entrainment, compressive strengths, or other requirements have not been met, as directed by Architect. Testing and inspecting agency may conduct tests to determine adequacy of concrete by cored cylinders complying with ASTM C 42/C 42M or by other methods as directed by Architect.
14. Additional testing and inspecting, at Contractor's expense, will be performed to determine compliance of replaced or additional work with specified requirements.

15. Correct deficiencies in the Work that test reports and inspections indicate do not comply with the Contract Documents.

E. Measure floor and slab flatness and levelness according to ASTM E 1155 (ASTM E 1155M) within 24 hours of finishing.

3.16 PROTECTION OF LIQUID FLOOR TREATMENTS

A. Protect liquid floor treatment from damage and wear during the remainder of construction period. Use protective methods and materials, including temporary covering, recommended in writing by liquid floor treatments installer.

END OF SECTION 033000

SECTION 042000 - UNIT MASONRY

PART 1 - GENERAL

1.1 RELATED DOCUMENTS

A. Drawings and general provisions of the Contract, including General and Supplementary Conditions and Division 01 Specification Sections, apply to this Section.

1.2 SUMMARY

A. Section Includes:

1. Concrete masonry units.
2. Face brick.
3. Mortar and grout.
4. Steel reinforcing bars.
5. Masonry joint reinforcement.
6. Ties and anchors.
7. Embedded flashing.
8. Miscellaneous masonry accessories.
9. Masonry-cell insulation.

B. Related Sections:

1. Section 055000 "Metal Fabrications" for furnishing steel lintels for unit masonry.
2. Section 076200 "Sheet Metal Flashing and Trim" for exposed sheet metal flashing and for furnishing manufactured reglets installed in masonry joints.

1.3 DEFINITIONS

A. CMU(s): Concrete masonry unit(s).

B. Reinforced Masonry: Masonry containing reinforcing steel in grouted cells.

1.4 PERFORMANCE REQUIREMENTS

A. Provide structural unit masonry that develops indicated net-area compressive strengths at 28 days.

1. Determine net-area compressive strength of masonry from average net-area compressive strengths of masonry units and mortar types (unit-strength method) according to Tables 1 and 2 in ACI 530.1/ASCE 6/TMS 602.

1.5 ACTION SUBMITTALS

A. Product Data: For each type of product indicated.

B. Shop Drawings: For the following:

1. Masonry Units: Show sizes, profiles, coursing, and locations of special shapes.
2. Reinforcing Steel: Detail bending and placement of unit masonry reinforcing bars. Comply with ACI 315, "Details and Detailing of Concrete Reinforcement." Show elevations of reinforced walls.
3. Fabricated Flashing: Detail corner units, end-dam units, and other special applications.

C. Samples for Initial Selection:

1. Colored mortar.

D. Samples for Verification: For each type and color of the following:

1. Decorative CMUs.
2. Face brick, in the form of straps of five or more bricks.
3. Glazed brick.
4. Pigmented and colored-aggregate mortar. Make Samples using same sand and mortar ingredients to be used on Project.
5. Weep holes and vents.
6. Accessories embedded in masonry.

1.6 INFORMATIONAL SUBMITTALS

A. List of Materials Used in Constructing Mockups: List generic product names together with manufacturers, manufacturers' product names, model numbers, lot numbers, batch numbers, source of supply, and other information as required to identify materials used. Include mix proportions for mortar and grout and source of aggregates.

1. Submittal is for information only. Neither receipt of list nor approval of mockup constitutes approval of deviations from the Contract Documents unless such deviations are specifically brought to the attention of Architect and approved in writing.

B. Qualification Data: For testing agency.

C. Material Certificates: For each type and size of the following:

1. Masonry units.

a. Include data on material properties.
b. For brick, include size-variation data verifying that actual range of sizes falls within specified tolerances.
c. For exposed brick, include test report for efflorescence according to ASTM C 67.
d. For surface-coated brick, include test report for durability of surface appearance after 50 cycles of freezing and thawing per ASTM C 67.
e. For masonry units used in structural masonry, include data and calculations establishing average net-area compressive strength of units.

2. Cementitious materials. Include brand, type, and name of manufacturer.
3. Preblended, dry mortar mixes. Include description of type and proportions of ingredients.
4. Grout mixes. Include description of type and proportions of ingredients.
5. Reinforcing bars.
6. Joint reinforcement.
7. Anchors, ties, and metal accessories.

D. Mix Designs: For each type of mortar and grout. Include description of type and proportions of ingredients.

1. Include test reports for mortar mixes required to comply with property specification. Test according to ASTM C 109/C 109M for compressive strength, ASTM C 1506 for water retention, and ASTM C 91 for air content.
2. Include test reports, according to ASTM C 1019, for grout mixes required to comply with compressive strength requirement.

E. Statement of Compressive Strength of Masonry: For each combination of masonry unit type and mortar type, provide statement of average net-area compressive strength of masonry units, mortar type, and resulting net-area compressive strength of masonry determined according to Tables 1 and 2 in ACI 530.1/ASCE 6/TMS 602.

F. Cold-Weather and Hot-Weather Procedures: Detailed description of methods, materials, and equipment to be used to comply with requirements.

1.7 QUALITY ASSURANCE

A. Testing Agency Qualifications: Qualified according to ASTM C 1093 for testing indicated.

B. Source Limitations for Masonry Units: Obtain exposed masonry units of a uniform texture and color, or a uniform blend within the ranges accepted for these characteristics, from single source from single manufacturer for each product required.

C. Source Limitations for Mortar Materials: Obtain mortar ingredients of a uniform quality, including color for exposed masonry, from single manufacturer for each cementitious component and from single source or producer for each aggregate.

D. Sample Panels: Build sample panels to verify selections made under Sample submittals and to demonstrate aesthetic effects. Comply with requirements in Section 014000 "Quality Requirements" for mockups.

1. If unit other than basis-of-design is proposed for use, build sample panel of basis-of-design unit, and proposed unit, for selection by Architect. Contractor may combine sample panel(s) with mockup(s), for concurrent review.
2. Build sample panels for each type of exposed unit masonry construction in sizes approximately 48 inches (1200 mm) long by 48 inches (1200 mm) high.
3. Build sample panels facing south, in location designated in field by Architect.
4. Where masonry is to match existing, build panels adjacent and parallel to existing surface.
5. Clean one-half of exposed faces of panels with masonry cleaner indicated.
6. Protect approved sample panels from the elements with weather-resistant membrane.
7. Approval of sample panels is for color, texture, and blending of masonry units; relationship of mortar and sealant colors to masonry unit colors; tooling of joints; aesthetic qualities of workmanship; and other material and construction qualities specifically approved by Architect in writing.

    a. Approval of sample panels does not constitute approval of deviations from the Contract Documents contained in sample panels unless Architect specifically approves such deviations in writing.

8. If brick other than basis-of-design is approved, provide change order in amount indicated on bid form.

E. Mockups: Build mockups to verify selections made under sample submittals and to demonstrate aesthetic effects and set quality standards for materials and execution.

1. Build mockup of typical wall area as shown on Drawings.
2. Build mockups for typical exterior wall in sizes approximately 48 inches (1200 mm) long by 60 inches (1500 mm) high by full thickness, including face and backup wythes and accessories.

    a. Include a sealant-filled joint at least 16 inches (400 mm) long in each mockup.
    b. Include lower corner of window opening at upper corner of exterior wall mockup. Make opening approximately 12 inches (300 mm) wide by 16 inches (400 mm) high.
    c. Include through-wall flashing installed for a 24-inch (600-mm) length in corner of exterior wall mockup approximately 16 inches (400 mm) down from top of mockup, with a 12-inch (300-mm) length of flashing left exposed to view (omit masonry above half of flashing).
    d. Include insulating air barrier, veneer anchors, flashing, cavity drainage material, and weep holes in exterior masonry-veneer wall mockup.

3. Where masonry is to match existing, erect mockups adjacent and parallel to existing surface.
4. Clean one-half of exposed faces of mockups with masonry cleaner as indicated.
5. Protect accepted mockups from the elements with weather-resistant membrane.
6. Approval of mockups is for color, texture, and blending of masonry units; relationship of mortar and sealant colors to masonry unit colors; tooling of joints; and aesthetic qualities of workmanship.

    a. Approval of mockups is also for other material and construction qualities specifically approved by Architect in writing.
    b. Approval of mockups does not constitute approval of deviations from the Contract Documents contained in mockups unless such deviations are specifically approved by Architect in writing.

7. Approved mockups may become part of the completed Work if undisturbed at time of Substantial Completion.

    a. At the conclusion of the Work and upon approval of Owner, Architect, and Construction Manager, remove mockups and sample panels that are not part of the completed Work.

F. Preinstallation Conference: Conduct conference at Project site to comply with requirements in Section 013100 "Project Management and Coordination."

1.8 DELIVERY, STORAGE, AND HANDLING

A. Store masonry units on elevated platforms in a dry location. If units are not stored in an enclosed location, cover tops and sides of stacks with waterproof sheeting, securely tied. If units become wet, do not install until they are dry.

B. Store cementitious materials on elevated platforms, under cover, and in a dry location. Do not use cementitious materials that have become damp.

C. Store aggregates where grading and other required characteristics can be maintained and contamination avoided.

D. Deliver preblended, dry mortar mix in moisture-resistant containers designed for use with dispensing silos. Store preblended, dry mortar mix in delivery containers on elevated platforms, under cover, and in a dry location or in covered weatherproof dispensing silos.

E. Store masonry accessories, including metal items, to prevent corrosion and accumulation of dirt and oil.

1.9 PROJECT CONDITIONS

A. Protection of Masonry: During construction, cover tops of walls, projections, and sills with waterproof sheeting at end of each day's work. Cover partially completed masonry when construction is not in progress.

1. Extend cover a minimum of 24 inches (600 mm) down both sides of walls and hold cover securely in place.
2. Where one wythe of multiwythe masonry walls is completed in advance of other wythes, secure cover a minimum of 24 inches (600 mm) down face next to unconstructed wythe and hold cover in place.

B. Do not apply uniform floor or roof loads for at least 12 hours and concentrated loads for at least three days after building masonry walls or columns.

C. Stain Prevention: Prevent grout, mortar, and soil from staining the face of masonry to be left exposed or painted. Immediately remove grout, mortar, and soil that come in contact with such masonry.

1. Protect base of walls from rain-splashed mud and from mortar splatter by spreading coverings on ground and over wall surface.
2. Protect sills, ledges, and projections from mortar droppings.
3. Protect surfaces of window and door frames, as well as similar products with painted and integral finishes, from mortar droppings.
4. Turn scaffold boards near the wall on edge at the end of each day to prevent rain from splashing mortar and dirt onto completed masonry.

D. Cold-Weather Requirements: Do not use frozen materials or materials mixed or coated with ice or frost. Do not build on frozen substrates. Remove and replace unit masonry damaged by frost or by freezing conditions. Comply with cold-weather construction requirements contained in ACI 530.1/ASCE 6/TMS 602.

1. Cold-Weather Cleaning: Use liquid cleaning methods only when air temperature is 40 deg F (4 deg C) and higher and will remain so until masonry has dried, but not less than seven days after completing cleaning.

E. Hot-Weather Requirements: Comply with hot-weather construction requirements contained in ACI 530.1/ASCE 6/TMS 602.

PART 2 - PRODUCTS

2.1 MASONRY UNITS, GENERAL

A. Defective Units: Referenced masonry unit standards may allow a certain percentage of units to contain chips, cracks, or other defects exceeding limits stated in the standard. Do not use units where such defects will be exposed in the completed Work.

B. Fire-Resistance Ratings: Where indicated, provide units that comply with requirements for fire-resistance ratings indicated as determined by testing according to ASTM E 119, by equivalent masonry thickness, or by other means, as acceptable to authorities having jurisdiction.

2.2 CONCRETE MASONRY UNITS

A. Shapes: Provide shapes indicated and as follows, with exposed surfaces matching exposed faces of adjacent units unless otherwise indicated.

1. Provide special shapes for lintels, corners, jambs, sashes, movement joints, headers, bonding, and other special conditions.
2. Provide bullnose units for outside corners unless otherwise indicated.

B. CMUs: ASTM C 90.

1. Unit Compressive Strength: Provide units with minimum average net-area compressive strength of 2150 psi (14.8 MPa).
2. Density Classification: Normal weight unless otherwise indicated.
3. Size (Width): Manufactured to dimensions 3/8 inch less than nominal dimensions.
4. Exposed Faces: Provide color and texture matching the range represented by Architect's sample.

2.3 CONCRETE LINTELS

A. Concrete Lintels: ASTM C 1623, matching CMUs in color, texture, and density classification; and with reinforcing bars indicated. Provide lintels with net-area compressive strength not less than CMUs.

1. Provide concrete lintels at CMU walls 4” and 6” thick only.
2. Provide steel lintels at all other CMU walls.

2.4 BRICK

A. General: Provide shapes indicated and as follows, with exposed surfaces matching finish and color of exposed faces of adjacent units:

1. For ends of sills and caps and for similar applications that would otherwise expose unfinished brick surfaces, provide units without cores or frogs and with exposed surfaces finished.
2. Provide special shapes for applications where stretcher units cannot accommodate special conditions, including those at corners, movement joints, bond beams, sashes, and lintels.
3. Provide special shapes for applications requiring brick of size, form, color, and texture on exposed surfaces that cannot be produced by sawing.
4. Provide special shapes for applications where shapes produced by sawing would result in sawed surfaces being exposed to view.

B. Face Brick: Facing brick complying with ASTM C 216.

1. Products: Subject to compliance with requirements, provide one of the following:

   a. Face Brick type 1: Basis-of-Design: Continental Brick Company; #455, Modular.

      1) Pine Hall Brick; CVS Red Modular.

   b. Face Brick type 2: Basis-of-Design: same as Face Brick type 2.
   c. Proposed substitutions shall be submitted to Architect for review not less than 10 days prior to receipt of Bid. Approved substitutions will be indicated in addendum.

2. Grade: SW.
3. Type: FBS.

4. Unit Compressive Strength: Provide units with minimum average net-area compressive strength of 6600 psi (45.51 MPa).
5. Initial Rate of Absorption: Less than 30 g/30 sq. in. (30 g/194 sq. cm) per minute when tested per ASTM C 67.
6. Efflorescence: Provide brick that has been tested according to ASTM C 67 and is rated "not effloresced."
7. Size (Actual Dimensions): 3-5/8 inches (92 mm) wide by 2-1/4 inches (57 mm) high by 7-5/8 inches (194 mm) long.
8. Application: Use where brick is exposed unless otherwise indicated.
9. Where shown to "match existing," provide face brick matching color range, texture, and size of existing adjacent brickwork.
10. Color and Texture: Match existing masonry.

2.5 MORTAR AND GROUT MATERIALS

A. Portland Cement: ASTM C 150, Type I or II, except Type III may be used for cold-weather construction. Provide natural color or white cement as required to produce mortar color indicated.

B. Hydrated Lime: ASTM C 207, Type S.

C. Portland Cement-Lime Mix: Packaged blend of portland cement and hydrated lime containing no other ingredients.

D. Masonry Cement: ASTM C 91.

1. Products: Subject to compliance with requirements, provide one of the following:

a. Capital Materials Corporation.
b. Cemex S.A.B. de C.V..
c. Essroc, Italcementi Group.
d. Holcim (US) Inc..
e. Lafarge North America Inc..
f. Lehigh Cement Company.
g. National Cement Company, Inc..

E. Mortar Pigments: Natural and synthetic iron oxides and chromium oxides, compounded for use in mortar mixes and complying with ASTM C 979. Use only pigments with a record of satisfactory performance in masonry mortar.

1. Products: Subject to compliance with requirements, provide one of the following:

a. Davis Colors; True Tone Mortar Colors.
b. Lanxess Corporation; Bayferrox Iron Oxide Pigments.
c. Solomon Colors, Inc.; SGS Mortar Colors.

F. Colored Cement Product: Packaged blend made from portland cement and hydrated lime or masonry cement and mortar pigments, all complying with specified requirements, and containing no other ingredients.

1. Colored Portland Cement-Lime Mix:

a. Products: Subject to compliance with requirements, provide one of the following:

1) Capital Materials Corporation; Riverton Portland Cement Lime Custom Color.

2) Holcim (US) Inc.; Rainbow Mortamix Custom Color Cement/Lime.
3) Lafarge North America Inc.; Eaglebond Portland & Lime.
4) Lehigh Cement Company; Lehigh Custom Color Portland/Lime Cement.

2. Colored Masonry Cement:

a. Products: Subject to compliance with requirements, provide one of the following:

1) Capital Materials Corporation; Flamingo Color Masonry Cement.
2) Cemex S.A.B. de C.V.; Richcolor Masonry Cement.
3) Essroc, Italcementi Group; Brixment-in-Color.
4) Holcim (US) Inc.; Rainbow Mortamix Custom Color Masonry Cement.
5) Lafarge North America Inc.; U.S. Cement Custom Color Masonry Cement.
6) Lehigh Cement Company; Lehigh Custom Color Masonry Cement.
7) National Cement Company, Inc.; Coosa Masonry Cement.

3. Formulate blend as required to produce color indicated or, if not indicated, as selected from manufacturer's standard colors.
4. Pigments shall not exceed 10 percent of portland cement by weight.
5. Pigments shall not exceed 5 percent of masonry cement by weight.

G. Aggregate for Mortar: ASTM C 144.

1. For mortar that is exposed to view, use washed aggregate consisting of natural sand or crushed stone.
2. For joints less than 1/4 inch (6 mm) thick, use aggregate graded with 100 percent passing the No. 16 (1.18-mm) sieve.
3. White-Mortar Aggregates: Natural white sand or crushed white stone.
4. Colored-Mortar Aggregates: Natural sand or crushed stone of color necessary to produce required mortar color.

H. Aggregate for Grout: ASTM C 404.

I. Cold-Weather Admixture: Nonchloride, noncorrosive, accelerating admixture complying with ASTM C 494/C 494M, Type C, and recommended by manufacturer for use in masonry mortar of composition indicated.

1. Products: Subject to compliance with requirements, provide one of the following:

a. Euclid Chemical Company (The); Accelguard 80.
b. Grace Construction Products, W. R. Grace & Co. - Conn.; Morset.
c. Sonneborn Products, BASF Aktiengesellschaft; Trimix-NCA.

J. Water-Repellent Admixture: Liquid water-repellent mortar admixture intended for use with CMUs containing integral water repellent by same manufacturer.

1. Products: Subject to compliance with requirements, provide one of the following:

a. ACM Chemistries; RainBloc for Mortar.
b. BASF Aktiengesellschaft; Rheopel Mortar Admixture.
c. Grace Construction Products, W. R. Grace & Co. - Conn.; Dry-Block Mortar Admixture.

K. Water: Potable.

2.6 REINFORCEMENT

A. Uncoated Steel Reinforcing Bars: ASTM A 615/A 615M or ASTM A 996/A 996M, Grade 60 (Grade 420).

B. Masonry Joint Reinforcement, General: ASTM A 951/A 951M.

1. Interior Walls: Hot-dip galvanized, carbon steel.
2. Exterior Walls: Hot-dip galvanized, carbon steel.
3. Wire Size for Side Rods: 0.148-inch (3.77-mm) diameter.
4. Wire Size for Cross Rods: 0.148-inch (3.77-mm) diameter.
5. Wire Size for Veneer Ties: 0.148-inch (3.77-mm) diameter.
6. Spacing of Cross Rods, Tabs, and Cross Ties: Not more than 16 inches (407 mm) o.c.
7. Provide in lengths of not less than 10 feet (3 m), with prefabricated corner and tee units.

C. Masonry Joint Reinforcement for Single-Wythe Masonry: Either ladder or truss type with single pair of side rods.

D. Masonry Joint Reinforcement for Multiwythe Masonry:

1. Adjustable (two-piece) type, either ladder or truss design, with one side rod at each face shell of backing wythe and with separate adjustable ties with pintle-and-eye connections having a maximum adjustment of 1-1/4 inches (32 mm). Size ties to extend at least halfway through facing wythe but with at least 5/8-inch (16-mm) cover on outside face.

2.7 TIES AND ANCHORS

A. Materials: Provide ties and anchors specified in this article that are made from materials that comply with the following unless otherwise indicated.

1. Hot-Dip Galvanized, Carbon-Steel Wire: ASTM A 82/A 82M; with ASTM A 153/A 153M, Class B-2 coating.
2. Galvanized Steel Sheet: ASTM A 653/A 653M, Commercial Steel, G60 (Z180) zinc coating.
3. Steel Sheet, Galvanized after Fabrication: ASTM A 1008/A 1008M, Commercial Steel, with ASTM A 153/A 153M, Class B coating.
4. Stainless-Steel Sheet: ASTM A 666, Type 304.
5. Stainless-Steel Bars: ASTM A 276 or ASTM a 666, Type 304.

B. Wire Ties, General: Unless otherwise indicated, size wire ties to extend at least halfway through veneer but with at least 5/8-inch (16-mm) cover on outside face. Outer ends of wires are bent 90 degrees and extend 2 inches (50 mm) parallel to face of veneer.

C. Individual Wire Ties: Rectangular units with closed ends and not less than 4 inches (100 mm) wide.

1. Z-shaped ties with ends bent 90 degrees to provide hooks not less than 2 inches (50 mm) long may be used for masonry constructed from solid units.
2. Where wythes are of different materials, use adjustable ties with pintle-and-eye connections having a maximum adjustment of 1-1/4 inches (32 mm).
3. Wire: Fabricate from 3/16-inch- (4.76-mm-) diameter, hot-dip galvanized steel wire.

D. Partition Top anchors: 0.105-inch- (2.66-mm-) thick metal plate with 3/8-inch- (9.5-mm-) diameter metal rod 6 inches (152 mm) long welded to plate and with closed-end plastic tube fitted over rod that allows rod to move in and out of tube. Fabricate from steel, hot-dip galvanized after fabrication.

E. Rigid Anchors: Fabricate from steel bars 1-1/2 inches (38 mm) wide by 1/4 inch (6.35 mm) thick by 24 inches (610 mm) long, with ends turned up 2 inches (51 mm) or with cross pins unless otherwise indicated.

1. Corrosion Protection: Hot-dip galvanized to comply with ASTM A 153/A 153M.

F. Adjustable Masonry-Veneer Anchors:

1. General: Provide anchors that allow vertical adjustment but resist tension and compression forces perpendicular to plane of wall, for attachment over sheathing to wood or metal studs, and as follows:

a. Structural Performance Characteristics: Capable of withstanding a 100-lbf (445-N) load in both tension and compression without deforming or developing play in excess of 0.05 inch (1.3 mm).

2. Wire Ties: Triangular-, rectangular-, or T-shaped wire ties fabricated from 0.187-inch-(4.76-mm-) diameter, hot-dip galvanized-steel wire unless otherwise indicated.

G. Anchor Bolts: Headed or L-shaped steel bolts complying with ASTM A 307, Grade A (ASTM F 568M, Property Class 4.6); with ASTM A 563 (ASTM A 563M) hex nuts and, where indicated, flat washers; hot-dip galvanized to comply with ASTM A 153/A 153M, Class C; of dimensions indicated.

2.8 EMBEDDED FLASHING MATERIALS

A. Metal Flashing: Provide metal flashing complying with SMACNA's "Architectural Sheet Metal Manual" and as follows:

1. Copper: ASTM B 370, Temper H00, cold-rolled copper sheet, 16-oz./sq. ft. (4.9-kg/sq. m) weight or 0.0216 inch (0.55 mm) thick or ASTM B 370, Temper H01, high-yield copper sheet, 12-oz./sq. ft. (3.7-kg/sq. m) weight or 0.0162 inch (0.41 mm) thick.
2. Fabricate continuous flashings in sections 96 inches (2400 mm) long minimum, but not exceeding 12 feet (3.7 m). Provide splice plates at joints of formed, smooth metal flashing.
3. Fabricate through-wall metal flashing embedded in masonry from copper, with ribs at 3-inch (76-mm) intervals along length of flashing to provide an integral mortar bond.

a. Products: Subject to compliance with requirements, provide one of the following:

1) Cheney Flashing Company; Cheney 3-Way Flashing (Sawtooth).
2) Keystone Flashing Company, Inc.; Keystone 3-Way Interlocking Thruwall Flashing.
3) Sandell Manufacturing Co., Inc.; Mechanically Keyed Flashing.

4. Fabricate through-wall flashing with snaplock receiver on exterior face where indicated to receive counterflashing.
5. Fabricate through-wall flashing with drip edge unless otherwise indicated. Fabricate by extending flashing 1/2 inch (13 mm) out from wall, with outer edge bent down 30 degrees and hemmed.
6. Fabricate metal drip edges for ribbed metal flashing from plain metal flashing of same metal as ribbed flashing and extending at least 3 inches (76 mm) into wall with hemmed inner edge to receive ribbed flashing and form a hooked seam. Form hem on upper surface of metal so that completed seam will shed water.
7. Metal Drip Edge: Fabricate from stainless steel. Extend at least 3 inches (76 mm) into wall and 1/2 inch (13 mm) out from wall, with outer edge bent down 30 degrees and hemmed.
8. Metal Expansion-Joint Strips: Fabricate from copper to shapes indicated.

B. Flexible Flashing: Use the following unless otherwise indicated:

1. Copper-Laminated Flashing: 5-oz./sq. ft. (1.5-kg/sq. m) copper sheet bonded between 2 layers of glass-fiber cloth. Use only where flashing is fully concealed in masonry.

a. Products: Subject to compliance with requirements, provide one of the following:

1) Advanced Building Products Inc.; Copper Sealtite 2000.
2) Hohmann & Barnard, Inc.; H & B Copper-Tuff Flashing.
3) Sandell Manufacturing Co., Inc.; Copper Fabric NA Flashing.
4) York Manufacturing, Inc.; Multi-Flash 500.

b. Thickness: 5oz minimum.

C. Application: Unless otherwise indicated, use the following:

1. Where flashing is indicated to receive counterflashing, use metal flashing.
2. Where flashing is indicated to be turned down at or beyond the wall face, use metal flashing.
3. Where flashing is partly exposed and is indicated to terminate at the wall face, use metal flashing or flexible flashing with a metal drip edge.

D. Solder and Sealants for Sheet Metal Flashings:

1. Solder for Copper: ASTM B 32, Grade Sn50, 50 percent tin and 50 percent lead.
2. Elastomeric Sealant: ASTM C 920, chemically curing silicone sealant; of type, grade, class, and use classifications required to seal joints in sheet metal flashing and trim and remain watertight.

E. Adhesives, Primers, and Seam Tapes for Flashings: Flashing manufacturer's standard products or products recommended by flashing manufacturer for bonding flashing sheets to each other and to substrates.

2.9 MISCELLANEOUS MASONRY ACCESSORIES

A. Compressible Filler: Premolded filler strips complying with ASTM D 1056, Grade 2A1; compressible up to 35 percent; of width and thickness indicated; formulated from neoprene or urethane.

B. Preformed Control-Joint Gaskets: Made from styrene-butadiene-rubber compound, complying with ASTM D 2000, Designation M2AA-805 and designed to fit standard sash block and to maintain lateral stability in masonry wall; size and configuration as indicated.

C. Bond-Breaker Strips: Asphalt-saturated, organic roofing felt complying with ASTM D 226, Type I (No. 15 asphalt felt).

D. Weep/Vent Products: Use the following unless otherwise indicated:

1. Cellular Plastic Weep/Vent: One-piece, flexible extrusion made from UV-resistant polypropylene copolymer, full height and width of head joint and depth 1/8 inch (3 mm) less than depth of outer wythe, in color selected from manufacturer's standard.

a. Products: Subject to compliance with requirements, provide one of the following:

1) Advanced Building Products Inc.; Mortar Maze weep vent.
2) Blok-Lok Limited; Cell-Vent.
3) Dayton Superior Corporation, Dur-O-Wal Division; Cell Vents.

4) Heckmann Building Products Inc.; No. 85 Cell Vent.
5) Hohmann & Barnard, Inc.; Quadro-Vent.
6) Wire-Bond; Cell Vent.

E. Cavity Drainage Material: Free-draining mesh, made from polymer strands that will not degrade within the wall cavity.

1. Products: Subject to compliance with requirements, provide one of the following:

a. Advanced Building Products Inc.; Mortairvent CW.
b. Keene Building Products; Cav-air-ator.

2. Provide one of the following configurations:

a. Sheets or strips full depth of cavity and installed to full height of cavity.
b. Sheets or strips not less than 3/4 inch (19 mm) thick and installed to full height of cavity with additional strips 4 inches (100 mm) high at weep holes and thick enough to fill entire depth of cavity and prevent weep holes from clogging with mortar.

F. Reinforcing Bar Positioners: Wire units designed to fit into mortar bed joints spanning masonry unit cells and hold reinforcing bars in center of cells. Units are formed from 0.148-inch (3.77-mm) steel wire, hot-dip galvanized after fabrication. Provide units designed for number of bars indicated.

1. Products: Subject to compliance with requirements, available products that may be incorporated into the Work include, but are not limited to, the following:

a. Dayton Superior Corporation, Dur-O-Wal Division; D/A 810, D/A 812 or D/A 817.
b. Heckmann Building Products Inc.; No. 376 Rebar Positioner.
c. Hohmann & Barnard, Inc.; #RB or #RB-Twin Rebar Positioner.
d. Wire-Bond; O-Ring or Double O-Ring Rebar Positioner.

2.10 MASONRY-CELL INSULATION

A. Loose-Granular Fill Insulation: Perlite complying with ASTM C 549, Type II (surface treated for water repellency and limited moisture absorption) or Type IV (surface treated for water repellency and to limit dust generation).

2.11 MASONRY CLEANERS

A. Proprietary Acidic Cleaner: Manufacturer's standard-strength cleaner designed for removing mortar/grout stains, efflorescence, and other new construction stains from new masonry without discoloring or damaging masonry surfaces. Use product expressly approved for intended use by cleaner manufacturer and manufacturer of masonry units being cleaned.

1. Manufacturers: Subject to compliance with requirements, provide products by one of the following:

a. Diedrich Technologies, Inc.
b. EaCo Chem, Inc.
c. ProSoCo, Inc.

B. Non-acidic Cleaner: Manufacturer's standard-strength cleaner designed for removing mortar/grout stains, efflorescence, and other new construction stains from new masonry without discoloring or damaging

masonry surfaces. Use product expressly approved for intended use by cleaner manufacturer and manufacturer of masonry units being cleaned.

1. Manufacturers: Subject to compliance with requirements, provide products by one of the following:

    a. Cathedral Stone Products; masonRE Efflorescence Remover Light & Heavy Duty.
    b. ProSoCo, Inc.

2.12 MORTAR AND GROUT MIXES

A. General: Do not use admixtures, including pigments, air-entraining agents, accelerators, retarders, water-repellent agents, antifreeze compounds, or other admixtures, unless otherwise indicated.

1. Do not use calcium chloride in mortar or grout.
2. Use masonry cement mortar unless otherwise indicated.
3. Add cold-weather admixture (if used) at same rate for all mortar that will be exposed to view, regardless of weather conditions, to ensure that mortar color is consistent.

B. Preblended, Dry Mortar Mix: Furnish dry mortar ingredients in form of a preblended mix. Measure quantities by weight to ensure accurate proportions, and thoroughly blend ingredients before delivering to Project site.

C. Mortar for Unit Masonry: Comply with ASTM C 270, Proportion Specification. Provide the following types of mortar for applications stated unless another type is indicated or needed to provide required compressive strength of masonry.

1. For masonry below grade or in contact with earth, use Type S.
2. For reinforced masonry, use Type S.
3. For mortar parge coats, use Type S or Type N.
4. For exterior, above-grade, load-bearing and non-load-bearing walls and parapet walls; for interior load-bearing walls; for interior non-load-bearing partitions; and for other applications where another type is not indicated, use Type N.
5. For interior non-load-bearing partitions, Type O may be used instead of Type N.

D. Pigmented Mortar: Use colored cement product or select and proportion pigments with other ingredients to produce color required. Do not add pigments to colored cement products.

1. Pigments shall not exceed 10 percent of portland cement by weight.
2. Pigments shall not exceed 5 percent of masonry cement by weight.
3. Mix to match Architect's sample.
4. Application: Use pigmented mortar for exposed mortar joints with the following units:

    a. Decorative CMUs.
    b. Face brick.
    c. Glazed brick.

E. Colored-Aggregate Mortar: Produce required mortar color by using colored aggregates and natural color or white cement as necessary to produce required mortar color.

1. Mix to match Architect's sample.
2. Application: Use colored aggregate mortar for exposed mortar joints with the following units:

    a. Decorative CMUs.

b. Face brick.
c. Glazed brick.

F. Grout for Unit Masonry: Comply with ASTM C 476.

1. Use grout of type indicated or, if not otherwise indicated, of type (fine or coarse) that will comply with Table 1.15.1 in ACI 530.1/ASCE 6/TMS 602 for dimensions of grout spaces and pour height.
2. Proportion grout in accordance with ASTM C 476, Table 1 or paragraph 4.2.2 for specified 28-day compressive strength indicated, but not less than 3000 psi (21 MPa).
3. Provide grout with a slump of 10 to 11 inches (254 to 279 mm) as measured according to ASTM C 143/C 143M.

PART 3 - EXECUTION

3.1 EXAMINATION

A. Examine conditions, with Installer present, for compliance with requirements for installation tolerances and other conditions affecting performance of the Work.

1. For the record, prepare written report, endorsed by Installer, listing conditions detrimental to performance of work.
2. Verify that foundations are within tolerances specified.
3. Verify that reinforcing dowels are properly placed.

B. Before installation, examine rough-in and built-in construction for piping systems to verify actual locations of piping connections.

C. Proceed with installation only after unsatisfactory conditions have been corrected.

3.2 INSTALLATION, GENERAL

A. Thickness: Build cavity and composite walls and other masonry construction to full thickness shown. Build single-wythe walls to actual widths of masonry units, using units of widths indicated.

B. Build chases and recesses to accommodate items specified in this and other Sections.

C. Leave openings for equipment to be installed before completing masonry. After installing equipment, complete masonry to match the construction immediately adjacent to opening.

D. Use full-size units without cutting if possible. If cutting is required to provide a continuous pattern or to fit adjoining construction, cut units with motor-driven saws; provide clean, sharp, unchipped edges. Allow units to dry before laying unless wetting of units is specified. Install cut units with cut surfaces and, where possible, cut edges concealed.

E. Select and arrange units for exposed unit masonry to produce a uniform blend of colors and textures.

1. Mix units from several pallets or cubes as they are placed.

F. Matching Existing Masonry: Match coursing, bonding, color, and texture of existing masonry. Where new work abuts existing, remove existing and tooth new units into existing coursing.

G. Wetting of Brick: Wet brick before laying if initial rate of absorption exceeds 30 g/30 sq. in. (30 g/194 sq. cm) per minute when tested per ASTM C 67. Allow units to absorb water so they are damp but not wet at time of laying.

3.3 TOLERANCES

A. Dimensions and Locations of Elements:

1. For dimensions in cross section or elevation do not vary by more than plus 1/2 inch (12 mm) or minus 1/4 inch (6 mm).
2. For location of elements in plan do not vary from that indicated by more than plus or minus 1/2 inch (12 mm).
3. For location of elements in elevation do not vary from that indicated by more than plus or minus 1/4 inch (6 mm) in a story height or 1/2 inch (12 mm) total.

B. Lines and Levels:

1. For bed joints and top surfaces of bearing walls do not vary from level by more than 1/4 inch in 10 feet (6 mm in 3 m), or 1/2 inch (12 mm) maximum.
2. For conspicuous horizontal lines, such as lintels, sills, parapets, and reveals, do not vary from level by more than 1/8 inch in 10 feet (3 mm in 3 m), 1/4 inch in 20 feet (6 mm in 6 m), or 1/2 inch (12 mm) maximum.
3. For vertical lines and surfaces do not vary from plumb by more than 1/4 inch in 10 feet (6 mm in 3 m), 3/8 inch in 20 feet (9 mm in 6 m), or 1/2 inch (12 mm) maximum.
4. For conspicuous vertical lines, such as external corners, door jambs, reveals, and expansion and control joints, do not vary from plumb by more than 1/8 inch in 10 feet (3 mm in 3 m), 1/4 inch in 20 feet (6 mm in 6 m), or 1/2 inch (12 mm) maximum.
5. For lines and surfaces do not vary from straight by more than 1/4 inch in 10 feet (6 mm in 3 m), 3/8 inch in 20 feet (9 mm in 6 m), or 1/2 inch (12 mm) maximum.
6. For vertical alignment of exposed head joints, do not vary from plumb by more than 1/4 inch in 10 feet (6 mm in 3 m), or 1/2 inch (12 mm) maximum.
7. For faces of adjacent exposed masonry units, do not vary from flush alignment by more than 1/16 inch (1.5 mm) except due to warpage of masonry units within tolerances specified for warpage of units.

C. Joints:

1. For bed joints, do not vary from thickness indicated by more than plus or minus 1/8 inch (3 mm), with a maximum thickness limited to 1/2 inch (12 mm).
2. For exposed bed joints, do not vary from bed-joint thickness of adjacent courses by more than 1/8 inch (3 mm).
3. For head and collar joints, do not vary from thickness indicated by more than plus 3/8 inch (9 mm) or minus 1/4 inch (6 mm).
4. For exposed head joints, do not vary from thickness indicated by more than plus or minus 1/8 inch (3 mm). Do not vary from adjacent bed-joint and head-joint thicknesses by more than 1/8 inch (3 mm).
5. For exposed bed joints and head joints of stacked bond, do not vary from a straight line by more than 1/16 inch (1.5 mm) from one masonry unit to the next.

3.4 LAYING MASONRY WALLS

A. Lay out walls in advance for accurate spacing of surface bond patterns with uniform joint thicknesses and for accurate location of openings, movement-type joints, returns, and offsets. Avoid using less-than-half-size units, particularly at corners, jambs, and, where possible, at other locations.

B. Bond Pattern for Exposed Masonry: Unless otherwise indicated, lay exposed masonry in running bond to match existing; do not use units with less than nominal 4-inch (100-mm) horizontal face dimensions at corners or jambs.

C. Lay concealed masonry with all units in a wythe in running bond or bonded by lapping not less than 4-inches (100-mm). Bond and interlock each course of each wythe at corners. Do not use units with less than nominal 4-inch (100-mm) horizontal face dimensions at corners or jambs.

D. Stopping and Resuming Work: Stop work by racking back units in each course from those in course below; do not tooth. When resuming work, clean masonry surfaces that are to receive mortar, remove loose masonry units and mortar, and wet brick if required before laying fresh masonry.

E. Built-in Work: As construction progresses, build in items specified in this and other Sections. Fill in solidly with masonry around built-in items.

F. Fill space between steel frames and masonry solidly with mortar unless otherwise indicated.

G. Where built-in items are to be embedded in cores of hollow masonry units, place a layer of metal lath, wire mesh, or plastic mesh in the joint below and rod mortar or grout into core.

H. Fill cores in hollow CMUs with grout 24 inches (600 mm) under bearing plates, beams, lintels, posts, and similar items unless otherwise indicated.

I. Build non-load-bearing interior partitions full height of story to underside of solid floor or roof structure above unless otherwise indicated.

1. Install compressible filler in joint between top of partition and underside of structure above.
2. Fasten partition top anchors to structure above and build into top of partition. Grout cells of CMUs solidly around plastic tubes of anchors and push tubes down into grout to provide 1/2-inch (13-mm) clearance between end of anchor rod and end of tube. Space anchors 48 inches (1200 mm) o.c. unless otherwise indicated.
3. Wedge non-load-bearing partitions against structure above with small pieces of tile, slate, or metal. Fill joint with mortar after dead-load deflection of structure above approaches final position.
4. At fire-rated partitions, treat joint between top of partition and underside of structure above to comply with Section 078446 "Fire-Resistive Joint Systems."

3.5 MORTAR BEDDING AND JOINTING

A. Lay hollow CMUs as follows:

1. With face shells fully bedded in mortar and with head joints of depth equal to bed joints.
2. With webs fully bedded in mortar in all courses of piers, columns, and pilasters.
3. With webs fully bedded in mortar in grouted masonry, including starting course on footings.
4. With entire units, including areas under cells, fully bedded in mortar at starting course on footings where cells are not grouted.

B. Lay solid masonry units with completely filled bed and head joints; butter ends with sufficient mortar to fill head joints and shove into place. Do not deeply furrow bed joints or slush head joints.

C. Tool exposed joints slightly concave when thumbprint hard, using a jointer larger than joint thickness unless otherwise indicated.

1. For glazed masonry units, use a nonmetallic jointer 3/4 inch (19 mm) or more in width.

D. Cut joints flush for masonry walls to receive plaster or other direct-applied finishes (other than paint) unless otherwise indicated.

3.6 COMPOSITE MASONRY

A. Bond wythes of composite masonry together using one of the following methods:

1. Individual Metal Ties: Provide ties as shown installed in horizontal joints, but not less than one metal tie for 1.77 sq. ft. (0.16 sq. m) of wall area spaced not to exceed 16 inches (406 mm) o.c. horizontally and 16 inches (406 mm) o.c. vertically. Stagger ties in alternate courses. Provide additional ties within 12 inches (305 mm) of openings and space not more than 36 inches (914 mm) apart around perimeter of openings. At intersecting and abutting walls, provide ties at no more than 24 inches (610 mm) o.c. vertically.

a. Where bed joints of wythes do not align, use adjustable (two-piece) type ties.

2. Masonry Joint Reinforcement: Installed in horizontal mortar joints.

a. Where bed joints of both wythes align, use tab-type reinforcement.
b. Where bed joints of wythes do not align, use adjustable (two-piece) type reinforcement.

B. Collar Joints: Solidly fill collar joints by parging face of first wythe that is laid and shoving units of other wythe into place.

C. Corners: Provide interlocking masonry unit bond in each wythe and course at corners unless otherwise indicated.

1. Provide continuity with masonry joint reinforcement at corners by using prefabricated L-shaped units as well as masonry bonding.

D. Intersecting and Abutting Walls: Unless vertical expansion or control joints are shown at juncture, bond walls together as follows:

1. Provide individual metal ties not more than 16 inches (406 mm) o.c.

3.7 CAVITY WALLS

A. Bond wythes of cavity walls together using one of the following methods:

1. Individual Metal Ties: Provide ties as shown installed in horizontal joints, but not less than one metal tie for 1.77 sq. ft. (0.16 sq. m) of wall area spaced not to exceed 16 inches (406 mm) o.c. horizontally and 16 inches (406 mm) o.c. vertically. Stagger ties in alternate courses. Provide additional ties within 12 inches (305 mm) of openings and space not more than 36 inches (915 mm) apart around perimeter of openings. At intersecting and abutting walls, provide ties at no more than 24 inches (610 mm) o.c. vertically.

a. Where bed joints of wythes do not align, use adjustable (two-piece) type ties.
b. Where one wythe is of clay masonry and the other of concrete masonry, use adjustable (two-piece) type ties to allow for differential movement regardless of whether bed joints align.

2. Masonry Joint Reinforcement: Installed in horizontal mortar joints.

a. Where bed joints of both wythes align, use tab-type reinforcement.
b. Where bed joints of wythes do not align, use adjustable (two-piece) type reinforcement.
c. Where one wythe is of clay masonry and the other of concrete masonry, use adjustable (two-piece) type reinforcement to allow for differential movement regardless of whether bed joints align.

3. Masonry Veneer Anchors: Comply with requirements for anchoring masonry veneers.

B. Keep cavities clean of mortar droppings and other materials during construction. Bevel beds away from cavity, to minimize mortar protrusions into cavity. Do not attempt to trowel or remove mortar fins protruding into cavity.

C. Apply air barrier to face of backup wythe to comply with Section 072110 "Insulating Air Barriers."

3.8 MASONRY-CELL INSULATION

A. Pour granular insulation into cavities to fill void spaces. Maintain inspection ports to show presence of insulation at extremities of each pour area. Close the ports after filling has been confirmed. Limit the fall of insulation to 1 story high, but not more than 20 feet (6 m).

3.9 MASONRY JOINT REINFORCEMENT

A. General: Install entire length of longitudinal side rods in mortar with a minimum cover of 5/8 inch (16 mm) on exterior side of walls, 1/2 inch (13 mm) elsewhere. Lap reinforcement a minimum of 6 inches (150 mm).

1. Space reinforcement not more than 16 inches (406 mm) o.c.
2. Space reinforcement not more than 8 inches (203 mm) o.c. in foundation walls and parapet walls.
3. Provide reinforcement not more than 8 inches (203 mm) above and below wall openings and extending 12 inches (305 mm) beyond openings in addition to continuous reinforcement.

B. Interrupt joint reinforcement at control and expansion joints unless otherwise indicated.

C. Cut and bend reinforcing units as directed by manufacturer for continuity at corners, returns, offsets, column fireproofing, pipe enclosures, and other special conditions.

3.10 ANCHORING MASONRY VENEERS

A. Anchor masonry veneers to concrete and masonry backup with masonry-veneer anchors to comply with the following requirements:

1. Embed tie sections in masonry joints. Provide not less than 2 inches (50 mm) of air space between back of masonry veneer and face of sheathing.
2. Locate anchor sections to allow maximum vertical differential movement of ties up and down.

3. Space anchors as indicated, but not more than 18 inches (458 mm) o.c. vertically and 24 inches (610 mm) o.c. horizontally, with not less than 1 anchor for each 2 sq. ft. (0.2 sq. m) of wall area. Install additional anchors within 12 inches (305 mm) of openings and at intervals, not exceeding 8 inches (203 mm), around perimeter.
4. Space anchors as indicated, but not more than 16 inches (406 mm) o.c. vertically and 16 inches (406 mm) o.c. horizontally with not less than 1 anchor for each 2.67 sq. ft. (0.17 sq. m) of wall area. Install additional anchors within 12 inches (305 mm) of openings and at intervals, not exceeding 36 inches (914 mm), around perimeter.

3.11 CONTROL AND EXPANSION JOINTS

A. General: Install control and expansion joint materials in unit masonry as masonry progresses. Do not allow materials to span control and expansion joints without provision to allow for in-plane wall or partition movement.

B. Form control joints in concrete masonry using one of the following methods:

1. Install interlocking units designed for control joints. Install bond-breaker strips at joint. Keep head joints free and clear of mortar or rake out joint for application of sealant.
2. Install temporary foam-plastic filler in head joints and remove filler when unit masonry is complete for application of sealant.

C. Form expansion joints in brick as follows:

1. Form open joint full depth of brick wythe and of width indicated, but not less than 3/8 inch (10 mm) for installation of sealant and backer rod specified in Section 079200 "Joint Sealants."

3.12 LINTELS

A. Install steel lintels where indicated.

B. Provide concrete lintels where shown and where openings of more than 12 inches (305 mm) for brick-size units and 24 inches (610 mm) for block-size units are shown without structural steel or other supporting lintels.

C. Provide minimum bearing of 8 inches (200 mm) at each jamb unless otherwise indicated.

3.13 FLASHING, WEEP HOLES, CAVITY DRAINAGE, AND VENTS

A. General: Install embedded flashing and weep holes in masonry at shelf angles, lintels, ledges, other obstructions to downward flow of water in wall, and where indicated. Install vents at shelf angles, ledges, and other obstructions to upward flow of air in cavities, and where indicated.

B. Install flashing as follows unless otherwise indicated:

1. Prepare masonry surfaces so they are smooth and free from projections that could puncture flashing. Where flashing is within mortar joint, place through-wall flashing on sloping bed of mortar and cover with mortar. Before covering with mortar, seal penetrations in flashing with adhesive, sealant, or tape as recommended by flashing manufacturer.
2. At multiwythe masonry walls, including cavity walls, extend flashing through outer wythe, turned up a minimum of 8 inches (200 mm), and through inner wythe to within 1/2 inch (13 mm) of the interior face of wall in exposed masonry. Where interior face of wall is to receive furring or

framing, carry flashing completely through inner wythe and turn flashing up approximately 2 inches (50 mm) on interior face.

3. At multiwythe masonry walls, including cavity walls, extend flashing through outer wythe, turned up a minimum of 8 inches (200 mm), and 1-1/2 inches (38 mm) into the inner wythe. Form 1/4-inch (6-mm) hook in edge of flashing embedded in inner wythe.
4. At lintels and shelf angles, extend flashing a minimum of 6 inches (150 mm) into masonry at each end. At heads and sills, extend flashing 6 inches (150 mm) at ends and turn up not less than 2 inches (50 mm) to form end dams.
5. Interlock end joints of ribbed sheet metal flashing by overlapping ribs not less than 1-1/2 inches (38 mm) or as recommended by flashing manufacturer, and seal lap with elastomeric sealant complying with requirements in Section 079200 "Joint Sealants" for application indicated.
6. Install metal drip edges with ribbed sheet metal flashing by interlocking hemmed edges to form hooked seam. Seal seam with elastomeric sealant complying with requirements in Section 079200 "Joint Sealants" for application indicated.
7. Install metal drip edges beneath flexible flashing at exterior face of wall. Stop flexible flashing 1/2 inch (13 mm) back from outside face of wall and adhere flexible flashing to top of metal drip edge.

C. Install weep holes in head joints in exterior wythes of first course of masonry immediately above embedded flashing and as follows:

1. Use specified weep/vent products to form weep holes.
2. Space weep holes 24 inches (600 mm) o.c. unless otherwise indicated.

D. Place cavity drainage material in cavities to comply with configuration requirements for cavity drainage material in "Miscellaneous Masonry Accessories" Article.

E. Install vents in head joints in exterior wythes at spacing indicated. Use specified weep/vent products to form vents.

3.14 REINFORCED UNIT MASONRY INSTALLATION

A. Temporary Formwork and Shores: Construct formwork and shores as needed to support reinforced masonry elements during construction.

1. Construct formwork to provide shape, line, and dimensions of completed masonry as indicated. Make forms sufficiently tight to prevent leakage of mortar and grout. Brace, tie, and support forms to maintain position and shape during construction and curing of reinforced masonry.
2. Do not remove forms and shores until reinforced masonry members have hardened sufficiently to carry their own weight and other loads that may be placed on them during construction.

B. Placing Reinforcement: Comply with requirements in ACI 530.1/ASCE 6/TMS 602.

C. Grouting: Do not place grout until entire height of masonry to be grouted has attained enough strength to resist grout pressure.

1. Comply with requirements in ACI 530.1/ASCE 6/TMS 602 for cleanouts and for grout placement, including minimum grout space and maximum pour height.
2. Limit height of vertical grout pours to not more than 60 inches (1520 mm).

3.15 FIELD QUALITY CONTROL

A. Testing and Inspecting: Owner will engage special inspectors to perform tests and inspections and prepare reports. Allow inspectors access to scaffolding and work areas, as needed to perform tests and inspections. Retesting of materials that fail to comply with specified requirements shall be done at Contractor's expense.

B. Inspections: Level 2 special inspections according to the "International Building Code."

1. Begin masonry construction only after inspectors have verified proportions of site-prepared mortar.
2. Place grout only after inspectors have verified compliance of grout spaces and of grades, sizes, and locations of reinforcement.
3. Place grout only after inspectors have verified proportions of site-prepared grout.

C. Testing Prior to Construction: One set of tests.

D. Testing Frequency: One set of tests for each 5000 sq. ft. (464 sq. m) of wall area or portion thereof.

E. Clay Masonry Unit Test: For each type of unit provided, according to ASTM C 67 for compressive strength.

F. Concrete Masonry Unit Test: For each type of unit provided, according to ASTM C 140 for compressive strength.

G. Mortar Aggregate Ratio Test (Proportion Specification): For each mix provided, according to ASTM C 780.

H. Mortar Test (Property Specification): For each mix provided, according to ASTM C 780. Test mortar for mortar air content and compressive strength.

I. Grout Test (Compressive Strength): For each mix provided, according to ASTM C 1019.

J. Prism Test: For each type of construction provided, according to ASTM C 1314 at 7 days and at 28 days.

3.16 PARGING

A. Parge exterior faces of below-grade masonry walls, where indicated, in 2 uniform coats to a total thickness of 3/4 inch (19 mm). Dampen wall before applying first coat and scarify first coat to ensure full bond to subsequent coat.

B. Use a steel-trowel finish to produce a smooth, flat, dense surface with a maximum surface variation of 1/8 inch per foot (3 mm per 300 mm). Form a wash at top of parging and a cove at bottom.

C. Damp-cure parging for at least 24 hours and protect parging until cured.

3.17 REPAIRING, POINTING, AND CLEANING

A. Remove and replace masonry units that are loose, chipped, broken, stained, or otherwise damaged or that do not match adjoining units. Install new units to match adjoining units; install in fresh mortar, pointed to eliminate evidence of replacement.

B. Pointing: During the tooling of joints, enlarge voids and holes, except weep holes, and completely fill with mortar. Point up joints, including corners, openings, and adjacent construction, to provide a neat, uniform appearance. Prepare joints for sealant application, where indicated.

C. In-Progress Cleaning: Clean unit masonry as work progresses by dry brushing to remove mortar fins and smears before tooling joints.

D. Final Cleaning: After mortar is thoroughly set and cured, clean exposed masonry as follows:

1. Remove large mortar particles by hand with wooden paddles and nonmetallic scrape hoes or chisels.
2. Test cleaning methods on sample wall panel; leave one-half of panel uncleaned for comparison purposes. Obtain Architect's approval of sample cleaning before proceeding with cleaning of masonry.
3. Protect adjacent stone and nonmasonry surfaces from contact with cleaner by covering them with liquid strippable masking agent or polyethylene film and waterproof masking tape.
4. Wet wall surfaces with water before applying cleaners; remove cleaners promptly by rinsing surfaces thoroughly with clear water.
5. Clean masonry with a proprietary acidic or non-acidic cleaner applied according to manufacturer's written instructions.
6. Clean concrete masonry by cleaning method indicated in NCMA TEK 8-2A applicable to type of stain on exposed surfaces.

3.18 MASONRY WASTE DISPOSAL

A. Salvageable Materials: Unless otherwise indicated, excess masonry materials are Contractor's property. At completion of unit masonry work, remove from Project site.

B. Waste Disposal as Fill Material: Dispose of clean masonry waste, including excess or soil-contaminated sand, waste mortar, and broken masonry units, by crushing and mixing with fill material as fill is placed.

1. Crush masonry waste to less than 4 inches (100 mm) in each dimension.
2. Mix masonry waste with at least two parts of specified fill material for each part of masonry waste. Fill material is specified in Section 312000 "Earth Moving."
3. Do not dispose of masonry waste as fill within 18 inches (450 mm) of finished grade.

C. Excess Masonry Waste: Remove excess clean masonry waste that cannot be used as fill, as described above, and other masonry waste, and legally dispose of off Owner's property.

END OF SECTION 042000

SECTION 047200 - CAST STONE MASONRY

PART 1 - GENERAL

1.1 RELATED DOCUMENTS

A. Drawings and general provisions of the Contract, including General and Supplementary Conditions and Division 01 Specification Sections, apply to this Section.

1.2 SUMMARY

A. Section Includes:

1. Cast stone trim including the following:

a. Window sills.
b. Coping.
c. Wall caps.
d. Belt courses.
e. Medallions.

B. Related Sections:

1. Section 042000 "Unit Masonry" for installing cast stone units in unit masonry.

1.3 ACTION SUBMITTALS

A. Product Data: For each type of product indicated.

1. For cast stone units, include construction details, material descriptions, dimensions of individual components and profiles, and finishes.

B. Shop Drawings: Show fabrication and installation details for cast stone units. Include dimensions, details of reinforcement and anchorages if any, and indication of finished faces.

1. Include building elevations showing layout of units and locations of joints and anchors.

C. Samples for Verification:

1. For each color and texture of cast stone required, 10 inches (250 mm) square in size.

D. Full-Size Samples: For each color and shape of cast stone unit required.

1. Make available for Architect's review at Project site.
2. Make Samples from materials to be used for units used on Project immediately before beginning production of units for Project.
3. Approved Samples may be installed in the Work.

1.4 INFORMATIONAL SUBMITTALS

A. Qualification Data: For manufacturer and testing agency.

1. Include copies of material test reports for completed projects, indicating compliance of cast stone with ASTM C 1364.

B. Material Test Reports: For each mix required to produce cast stone, based on testing according to ASTM C 1364, including test for resistance to freezing and thawing.

1. Provide test reports based on testing within previous two years.

1.5 QUALITY ASSURANCE

A. Manufacturer Qualifications: A qualified manufacturer of cast stone units similar to those indicated for this Project, that has sufficient production capacity to manufacture required units, and is a plant certified by the Cast Stone Institute.

B. Testing Agency Qualifications: Qualified according to ASTM E 329 for testing indicated.

C. Source Limitations for Cast Stone: Obtain cast stone units through single source from single manufacturer.

D. Mockups: Furnish cast stone for installation in mockups specified in Section 042000 "Unit Masonry."

1.6 DELIVERY, STORAGE, AND HANDLING

A. Coordinate delivery of cast stone with unit masonry work to avoid delaying the Work and to minimize the need for on-site storage.

B. Pack, handle, and ship cast stone units in suitable packs or pallets.

1. Lift with wide-belt slings; do not use wire rope or ropes that might cause staining. Move cast stone units, if required, using dollies with wood supports.
2. Store cast stone units on wood skids or pallets with nonstaining, waterproof covers, securely tied. Arrange to distribute weight evenly and to prevent damage to units. Ventilate under covers to prevent condensation.

1.7 PROJECT CONDITIONS

A. Cold-Weather Requirements: Do not use frozen materials or materials mixed or coated with ice or frost. Do not build on frozen substrates. Comply with cold-weather construction requirements in ACI 530.1/ASCE 6/TMS 602.

1. Cold-Weather Cleaning: Use liquid cleaning methods only when air temperature is 40 deg F (4 deg C) and above and will remain so until cast stone has dried, but no fewer than seven days after completing cleaning.

B. Hot-Weather Requirements: Comply with hot-weather construction requirements in ACI 530.1/ASCE 6/TMS 602.

PART 2 - PRODUCTS

2.1 CAST STONE MATERIALS

A. General: Comply with ASTM C 1364 and the following:

B. Portland Cement: ASTM C 150, Type I or Type III, containing not more than 0.60 percent total alkali when tested according to ASTM C 114. Provide natural color or white cement as required to produce cast stone color indicated.

C. Coarse Aggregates: Granite, quartz, or limestone complying with ASTM C 33; gradation and colors as needed to produce required cast stone textures and colors.

D. Fine Aggregates: Natural sand or crushed stone complying with ASTM C 33, gradation and colors as needed to produce required cast stone textures and colors.

E. Color Pigment: ASTM C 979, synthetic mineral-oxide pigments or colored water-reducing admixtures; color stable, free of carbon black, nonfading, and resistant to lime and other alkalis.

F. Admixtures: Use only admixtures specified or approved in writing by Architect.

1. Do not use admixtures that contain more than 0.1 percent water-soluble chloride ions by mass of cementitious materials. Do not use admixtures containing calcium chloride.
2. Use only admixtures that are certified by manufacturer to be compatible with cement and other admixtures used.
3. Air-Entraining Admixture: ASTM C 260. Add to mixes for units exposed to the exterior at manufacturer's prescribed rate to result in an air content of 4 to 6 percent, except do not add to zero-slump concrete mixes.
4. Water-Reducing Admixture: ASTM C 494/C 494M, Type A.
5. Water-Reducing, Retarding Admixture: ASTM C 494/C 494M, Type D.
6. Water-Reducing, Accelerating Admixture: ASTM C 494/C 494M, Type E.

G. Reinforcement: Deformed steel bars complying with ASTM A 615/A 615M, Grade 60 (Grade 420). Use galvanized or epoxy-coated reinforcement when covered with less than 1-1/2 inches (38 mm) of cast stone material.

1. Epoxy Coating: ASTM A 775/A 775M.
2. Galvanized Coating: ASTM A 767/A 767M.

H. Embedded Anchors and Other Inserts: Fabricated from stainless steel complying with ASTM A 240/A 240M, ASTM A 276, or ASTM A 666, Type 304.

2.2 CAST STONE UNITS

A. Manufacturers: Subject to compliance with requirements, provide products by one of the following:

1. Advanced Cast Stone, Inc.
2. Cast Stone Systems, Inc.
3. Reading Rock, Inc.

B. Provide cast stone units complying with ASTM C 1364 using either the vibrant dry tamp or wet-cast method.

1. Provide units that are resistant to freezing and thawing as determined by laboratory testing according to ASTM C 666/C 666M, Procedure A, as modified by ASTM C 1364.

C. Fabricate units with sharp arris and accurately reproduced details, with indicated texture on all exposed surfaces unless otherwise indicated.

1. Slope exposed horizontal surfaces 1:12 to drain unless otherwise indicated.
2. Provide raised fillets at backs of sills and at ends indicated to be built into jambs.
3. Provide drips on projecting elements unless otherwise indicated.

D. Fabrication Tolerances:

1. Variation in Cross Section: Do not vary from indicated dimensions by more than 1/8 inch (3 mm).
2. Variation in Length: Do not vary from indicated dimensions by more than 1/360 of the length of unit or 1/8 inch (3 mm), whichever is greater, but in no case by more than 1/4 inch (6 mm).
3. Warp, Bow, and Twist: Not to exceed 1/360 of the length of unit or 1/8 inch (3 mm), whichever is greater.
4. Location of Grooves, False Joints, Holes, Anchorages, and Similar Features: Do not vary from indicated position by more than 1/8 inch (3 mm) on formed surfaces of units and 3/8 inch (10 mm) on unformed surfaces.

E. Cure units as follows:

1. Cure units in enclosed moist curing room at 95 to 100 percent relative humidity and temperature of 100 deg F (38 deg C) for 12 hours or 70 deg F (21 deg C) for 16 hours.
2. Keep units damp and continue curing to comply with one of the following:

a. No fewer than five days at mean daily temperature of 70 deg F (21 deg C) or above.
b. No fewer than six days at mean daily temperature of 60 deg F (16 deg C) or above.
c. No fewer than seven days at mean daily temperature of 50 deg F (10 deg C) or above.
d. No fewer than eight days at mean daily temperature of 45 deg F (7 deg C) or above.

F. Acid etch units after curing to remove cement film from surfaces to be exposed to view.

G. Colors and Textures: As selected by Architect from manufacturer's full range, units with fine-grained texture resembling Indiana limestone.

2.3 ACCESSORIES

A. Anchors: Type and size indicated, fabricated from Type 304 stainless steel complying with ASTM A 240/A 240M, ASTM A 276, or ASTM A 666.

B. Dowels: 1/2-inch- (12-mm-) diameter, round bars, fabricated from Type 304 stainless steel complying with ASTM A 240/A 240M, ASTM A 276, or ASTM A 666.

2.4 MORTAR MIXES

A. Comply with requirements in Section 042000 "Unit Masonry" for mortar mixes.

1. Use masonry cement mortar unless otherwise indicated.

B. Comply with ASTM C 270, Proportion Specification.

1. For setting mortar, use Type S.
2. For pointing mortar, use Type N.

C. Pigmented Mortar: Use colored cement product or select and proportion pigments with other ingredients to produce color required. Do not add pigments to colored cement products.

1. Pigments shall not exceed 5 percent of masonry cement by weight.
2. Mix to match Architect's sample.
3. Application: Use pigmented mortar for exposed mortar joints.

D. Colored-Aggregate Mortar: Produce required mortar color by using colored aggregates and natural color or white cement as necessary to produce required mortar color.

1. Mix to match Architect's sample.
2. Application: Use colored aggregate mortar for exposed mortar joints.

2.5 SOURCE QUALITY CONTROL

A. Engage a qualified independent testing agency to sample and test cast stone units according to ASTM C 1364.

1. Include one test for resistance to freezing and thawing.

PART 3 - EXECUTION

3.1 EXAMINATION

A. Examine substrates and conditions, with Installer present, for compliance with requirements for installation tolerances and other conditions affecting performance of work.

B. Proceed with installation only after unsatisfactory conditions have been corrected.

3.2 SETTING ANCHORED CAST STONE WITH SEALANT-FILLED JOINTS

A. Set cast stone as indicated on Drawings. Set units accurately in locations indicated with edges and faces aligned according to established relationships and indicated tolerances.

1. Install anchors, supports, fasteners, and other attachments indicated or necessary to secure units in place.
2. Shim and adjust anchors, supports, and accessories to set cast stone in locations indicated with uniform joints.

B. Keep cavities open where unfilled space is indicated between back of cast stone units and backup wall; do not fill cavities with mortar or grout.

C. Fill anchor holes with sealant.

1. Where dowel holes occur at pressure-relieving joints, provide compressible material at ends of dowels.

D. Set cast stone supported on clip or continuous angles on resilient setting shims. Use material of thickness required to maintain uniform joint widths. Hold shims back from face of cast stone a distance at least equal to width of joint.

E. Keep joints free of mortar and other rigid materials. Remove temporary shims and spacers from joints after anchors and supports are secured in place and cast stone units are anchored. Do not begin sealant installation until temporary shims and spacers are removed.

1. Form open joint of width indicated, but not less than 3/8 inch (10 mm).

F. Prime cast stone surfaces to receive sealant and install compressible backer rod in joints before applying sealant unless otherwise indicated.

G. Prepare and apply sealant of type and at locations indicated to comply with applicable requirements in Section 079200 "Joint Sealants."

3.3 INSTALLATION TOLERANCES

A. Variation from Plumb: Do not exceed 1/8 inch in 10 feet (3 mm in 3 m), 1/4 inch in 20 feet (6 mm in 6 m), or 1/2 inch (12 mm) maximum.

B. Variation from Level: Do not exceed 1/8 inch in 10 feet (3 mm in 3 m), 1/4 inch in 20 feet (6 mm in 6 m), or 1/2 inch (12 mm) maximum.

C. Variation in Joint Width: Do not vary joint thickness more than 1/8 inch in 36 inches (3 mm in 900 mm) or one-fourth of nominal joint width, whichever is less.

D. Variation in Plane between Adjacent Surfaces (Lipping): Do not vary from flush alignment with adjacent units or adjacent surfaces indicated to be flush with units by more than 1/16 inch (1.5 mm), except where variation is due to warpage of units within tolerances specified.

3.4 ADJUSTING AND CLEANING

A. Remove and replace stained and otherwise damaged units and units not matching approved Samples. Cast stone may be repaired if methods and results are approved by Architect.

B. Replace units in a manner that results in cast stone matching approved Samples, complying with other requirements, and showing no evidence of replacement.

C. In-Progress Cleaning: Clean cast stone as work progresses.

1. Remove excess sealant immediately, including spills, smears, and spatter.

D. Final Cleaning: After mortar is thoroughly set and cured, clean exposed cast stone as follows:

1. Remove large mortar particles by hand with wooden paddles and nonmetallic scrape hoes or chisels.
2. Test cleaning methods on sample; leave one sample uncleaned for comparison purposes. Obtain Architect's approval of sample cleaning before proceeding with cleaning of cast stone.
3. Protect adjacent surfaces from contact with cleaner by covering them with liquid strippable masking agent or polyethylene film and waterproof masking tape.
4. Wet surfaces with water before applying cleaners; remove cleaners promptly by rinsing thoroughly with clear water.

5. Clean cast stone with proprietary non-acidic cleaner applied according to manufacturer's written instructions.

END OF SECTION 047200

SECTION 051200 - STRUCTURAL STEEL FRAMING

PART 1 - GENERAL

1.1 RELATED DOCUMENTS

A. Drawings and general provisions of the Contract, including General and Supplementary Conditions and Division 01 Specification Sections, apply to this Section.

1.2 SUMMARY

A. Section Includes:

1. Structural steel.
2. Field-installed shear connectors.
3. Grout.

B. Related Requirements:

1. Section 053100 "Steel Decking" for field installation of shear connectors through deck.
2. Section 055000 "Metal Fabrications" for miscellaneous steel fabrications and other steel items not defined as structural steel.
3. Section 099113 "Exterior Painting" and Section 099123 "Interior Painting" for surface-preparation and priming requirements.

1.3 DEFINITIONS

A. Structural Steel: Elements of the structural frame indicated on Drawings and as described in AISC 303, "Code of Standard Practice for Steel Buildings and Bridges."

B. Seismic-Load-Resisting System: Elements of structural-steel frame designated as "SLRS" or along grid lines designated as "SLRS" on Drawings, including columns, beams, and braces and their connections.

C. Heavy Sections: Rolled and built-up sections as follows:

1. Shapes included in ASTM A 6/A 6M with flanges thicker than 1-1/2 inches (38 mm).
2. Welded built-up members with plates thicker than 2 inches (50 mm).
3. Column base plates thicker than 2 inches (50 mm).

D. Protected Zone: Structural members or portions of structural members indicated as "Protected Zone" on Drawings. Connections of structural and nonstructural elements to protected zones are limited.

E. Demand Critical Welds: Those welds, the failure of which would result in significant degradation of the strength and stiffness of the Seismic-Load-Resisting System and which are indicated as "Demand Critical" or "Seismic Critical" on Drawings.

1.4 COORDINATION

A. Coordinate selection of shop primers with topcoats to be applied over them. Comply with paint and coating manufacturers' written recommendations to ensure that shop primers and topcoats are compatible with one another.

B. Coordinate installation of anchorage items to be embedded in or attached to other construction without delaying the Work. Provide setting diagrams, sheet metal templates, instructions, and directions for installation.

1.5 PREINSTALLATION MEETINGS

A. Preinstallation Conference: Conduct conference at Project site.

1.6 ACTION SUBMITTALS

A. Product Data: For each type of product.

B. Shop Drawings: Show fabrication of structural-steel components.

1. Include details of cuts, connections, splices, camber, holes, and other pertinent data.
2. Include embedment Drawings.
3. Indicate welds by standard AWS symbols, distinguishing between shop and field welds, and show size, length, and type of each weld. Show backing bars that are to be removed and supplemental fillet welds where backing bars are to remain.
4. Indicate type, size, and length of bolts, distinguishing between shop and field bolts. Identify pretensioned and slip-critical, high-strength bolted connections.
5. Identify members and connections of the Seismic-Load-Resisting System.
6. Indicate locations and dimensions of protected zones.
7. Identify demand critical welds.

C. Welding Procedure Specifications (WPSs) and Procedure Qualification Records (PQRs): Provide according to AWS D1.1/D1.1M, "Structural Welding Code - Steel," for each welded joint whether prequalified or qualified by testing, including the following:

1. Power source (constant current or constant voltage).
2. Electrode manufacturer and trade name, for demand critical welds.

D. Delegated-Design Submittal: For structural-steel connections indicated to comply with design loads, include analysis data signed and sealed by the qualified professional engineer responsible for their preparation.

1.7 INFORMATIONAL SUBMITTALS

A. Welding certificates.

B. Paint Compatibility Certificates: From manufacturers of topcoats applied over shop primers, certifying that shop primers are compatible with topcoats.

C. Mill test reports for structural steel, including chemical and physical properties.

D. Product Test Reports: For the following:

1. Bolts, nuts, and washers including mechanical properties and chemical analysis.
2. Direct-tension indicators.
3. Tension-control, high-strength, bolt-nut-washer assemblies.
4. Shear stud connectors.
5. Shop primers.
6. Nonshrink grout.

E. Survey of existing conditions.

F. Source quality-control reports.

G. Field quality-control and special inspection reports.

1.8 QUALITY ASSURANCE

A. Welding Qualifications: Qualify procedures and personnel according to AWS D1.1/D1.1M, "Structural Welding Code - Steel."

1. Welders and welding operators performing work on bottom-flange, demand-critical welds shall pass the supplemental welder qualification testing, as required by AWS D1.8/D1.8M. FCAW-S and FCAW-G shall be considered separate processes for welding personnel qualification.

B. Comply with applicable provisions of the following specifications and documents:

1. AISC 303.
2. AISC 341 and AISC 341s1.
3. AISC 360.
4. RCSC's "Specification for Structural Joints Using ASTM A 325 or A 490 Bolts."

1.9 DELIVERY, STORAGE, AND HANDLING

A. Store materials to permit easy access for inspection and identification. Keep steel members off ground and spaced by using pallets, dunnage, or other supports and spacers. Protect steel members and packaged materials from corrosion and deterioration.

1. Do not store materials on structure in a manner that might cause distortion, damage, or overload to members or supporting structures. Repair or replace damaged materials or structures as directed.

B. Store fasteners in a protected place in sealed containers with manufacturer's labels intact.

1. Fasteners may be repackaged provided Owner's testing and inspecting agency observes repackaging and seals containers.
2. Clean and relubricate bolts and nuts that become dry or rusty before use.
3. Comply with manufacturers' written recommendations for cleaning and lubricating ASTM F 1852 fasteners and for retesting fasteners after lubrication.

PART 2 - PRODUCTS

2.1 PERFORMANCE REQUIREMENTS

A. Connections: Provide details of simple shear connections required by the Contract Documents to be selected or completed by structural-steel fabricator, to withstand loads indicated and comply with other information and restrictions indicated.

1. Select and complete connections using schematic details indicated and AISC 360.
2. Use Allowable Stress Design; data are given at service-load level.

B. Moment Connections: Type PR, partially restrained.

C. Construction: Combined system of moment frame and shear walls.

2.2 STRUCTURAL-STEEL MATERIALS

A. Recycled Content of Steel Products: Postconsumer recycled content plus one-half of preconsumer recycled content not less than 25 percent.

B. W-Shapes: ASTM A 992/A 992M, Grade 50 (345).

C. Channels, Angles: ASTM A 36/A 36M.

D. Plate and Bar: ASTM A 36/A 36M.

E. Corrosion-Resisting Structural-Steel Shapes, Plates, and Bars: ASTM A 588/A 588M, Grade 50 (345).

F. Cold-Formed Hollow Structural Sections: ASTM A 500/A 500M, Grade B, structural tubing.

G. Corrosion-Resisting, Cold-Formed Hollow Structural Sections: ASTM A 847/A 847M, structural tubing.

H. Steel Pipe: ASTM A 53/A 53M, Type E or Type S, Grade B.

1. Weight Class: See drawings.
2. Finish: See drawings.

I. Welding Electrodes: Comply with AWS requirements.

2.3 BOLTS, CONNECTORS, AND ANCHORS

A. High-Strength Bolts, Nuts, and Washers: ASTM A 325 (ASTM A 325M), Type 1, heavy-hex steel structural bolts; ASTM A 563, Grade C, (ASTM A 563M, Class 8S) heavy-hex carbon-steel nuts; and ASTM F 436 (ASTM F 436M), Type 1, hardened carbon-steel washers; all with plain finish.

1. Direct-Tension Indicators: ASTM F 959, Type 325 (ASTM F 959M, Type 8.8), compressible-washer type with plain finish.

B. High-Strength Bolts, Nuts, and Washers: ASTM A 490 (ASTM A 490M), Type 1, heavy-hex steel structural bolts or tension-control, bolt-nut-washer assemblies with splined ends; ASTM A 563, Grade DH, (ASTM A 563M, Class 10S) heavy-hex carbon-steel nuts; and ASTM F 436 (ASTM F 436M), Type 1, hardened carbon-steel washers with plain finish.

1. Direct-Tension Indicators: ASTM F 959, Type 490 (ASTM F 959M, Type 10.9), compressible-washer type with plain finish.

C. Zinc-Coated High-Strength Bolts, Nuts, and Washers: ASTM A 325 (ASTM A 325M), Type 1, heavy-hex steel structural bolts; ASTM A 563, Grade DH (ASTM A 563M, Class 10S) heavy-hex carbon-steel nuts; and ASTM F 436 (ASTM F 436M), Type 1, hardened carbon-steel washers.

1. Finish: Hot-dip zinc coating.

D. Tension-Control, High-Strength Bolt-Nut-Washer Assemblies: ASTM F 1852, Type 1, heavy-hex head assemblies consisting of steel structural bolts with splined ends, heavy-hex carbon-steel nuts, and hardened carbon-steel washers.

1. Finish: Plain.

E. Shear Connectors: ASTM A 108, Grades 1015 through 1020, headed-stud type, cold-finished carbon steel; AWS D1.1/D1.1M, Type B.

F. Unheaded Anchor Rods: ASTM F 1554, Grade 36.

1. Configuration: Hooked.
2. Nuts: ASTM A 563 (ASTM A 563M) heavy-hex carbon steel.
3. Plate Washers: ASTM A 36/A 36M carbon steel.
4. Washers: ASTM F 436 (ASTM F 436M), Type 1, hardened carbon steel.
5. Finish: Plain.

G. Headed Anchor Rods: ASTM F 1554, Grade 36 straight.

1. Nuts: ASTM A 563 (ASTM A 563M) heavy-hex carbon steel.
2. Plate Washers: ASTM A 36/A 36M carbon steel.
3. Washers: ASTM F 436 (ASTM F 436M), Type 1, hardened carbon steel.
4. Finish: Plain or Hot-dip zinc coating, ASTM A 153/A 153M, Class C.

H. Threaded Rods: ASTM A 36/A 36M.

1. Nuts: ASTM A 563 (ASTM A 563M) heavy-hex carbon steel.
2. Washers: ASTM F 436 (ASTM F 436M), Type 1, hardened.
3. Finish: Plain or Hot-dip zinc coating, ASTM A 153/A 153M, Class C.

I. Clevises and Turnbuckles: Made from cold-finished carbon steel bars, ASTM A 108, Grade 1035.

J. Eye Bolts and Nuts: Made from cold-finished carbon steel bars, ASTM A 108, Grade 1030.

K. Sleeve Nuts: Made from cold-finished carbon steel bars, ASTM A 108, Grade 1018.

2.4 PRIMER

A. Low-Emitting Materials: Paints and coatings shall comply with the testing and product requirements of the California Department of Public Health's (formerly, the California Department of Health Services') "Standard Method for the Testing and Evaluation of Volatile Organic Chemical Emissions from Indoor Sources Using Environmental Chambers."

B. Primer: Comply with Section 099113 "Exterior Painting" and Section 099123 "Interior Painting."

C. Primer: Fabricator's standard lead- and chromate-free, nonasphaltic, rust-inhibiting primer complying with MPI#79 unless indicated to be finish painted.

D. Galvanizing Repair Paint: MPI#18, MPI#19, or SSPC-Paint 20.

2.5 GROUT

A. Metallic, Shrinkage-Resistant Grout: ASTM C 1107/C 1107M, factory-packaged, metallic aggregate grout, mixed with water to consistency suitable for application and a 30-minute working time.

B. Nonmetallic, Shrinkage-Resistant Grout: ASTM C 1107/C 1107M, factory-packaged, nonmetallic aggregate grout, noncorrosive and nonstaining, mixed with water to consistency suitable for application and a 30-minute working time.

2.6 FABRICATION

A. Structural Steel: Fabricate and assemble in shop to greatest extent possible. Fabricate according to AISC 303, "Code of Standard Practice for Steel Buildings and Bridges," and to AISC 360.

1. Camber structural-steel members where indicated.
2. Fabricate beams with rolling camber up.
3. Identify high-strength structural steel according to ASTM A 6/A 6M and maintain markings until structural steel has been erected.
4. Mark and match-mark materials for field assembly.
5. Complete structural-steel assemblies, including welding of units, before starting shop-priming operations.

B. Thermal Cutting: Perform thermal cutting by machine to greatest extent possible.

1. Plane thermally cut edges to be welded to comply with requirements in AWS D1.1/D1.1M.

C. Bolt Holes: Cut, drill, or punch standard bolt holes perpendicular to metal surfaces.

D. Finishing: Accurately finish ends of columns and other members transmitting bearing loads.

E. Cleaning: Clean and prepare steel surfaces that are to remain unpainted according to SSPC-SP 1, "Solvent Cleaning.", SSPC-SP 2, "Hand Tool Cleaning." Or SSPC-SP 3, "Power Tool Cleaning."

F. Shear Connectors: Prepare steel surfaces as recommended by manufacturer of shear connectors. Use automatic end welding of headed-stud shear connectors according to AWS D1.1/D1.1M and manufacturer's written instructions.

G. Steel Wall-Opening Framing: Select true and straight members for fabricating steel wall-opening framing to be attached to structural-steel frame. Straighten as required to provide uniform, square, and true members in completed wall framing. Build up welded framing, weld exposed joints continuously, and grind smooth.

H. Welded Door Frames: Build up welded door frames attached to structural-steel frame. Weld exposed joints continuously and grind smooth. Plug-weld fixed steel bar stops to frames. Secure removable stops to frames with countersunk machine screws, uniformly spaced not more than 10 inches (250 mm) o.c. unless otherwise indicated.

I. Holes: Provide holes required for securing other work to structural steel and for other work to pass through steel members.

1. Cut, drill, or punch holes perpendicular to steel surfaces. Do not thermally cut bolt holes or enlarge holes by burning.
2. Baseplate Holes: Cut, drill, mechanically thermal cut, or punch holes perpendicular to steel surfaces.
3. Weld threaded nuts to framing and other specialty items indicated to receive other work.

2.7 SHOP CONNECTIONS

A. High-Strength Bolts: Shop install high-strength bolts according to RCSC's "Specification for Structural Joints Using ASTM A 325 or A 490 Bolts" for type of bolt and type of joint specified.

1. Joint Type: Snug tightened unless noted otherwise on drawing.

B. Weld Connections: Comply with AWS D1.1/D1.1M and AWS D1.8/D1.8M for tolerances, appearances, welding procedure specifications, weld quality, and methods used in correcting welding work.

1. Assemble and weld built-up sections by methods that maintain true alignment of axes without exceeding tolerances in AISC 303 for mill material.

2.8 SHOP PRIMING

A. Shop prime steel surfaces except the following:

1. Surfaces embedded in concrete or mortar. Extend priming of partially embedded members to a depth of 2 inches (50 mm).
2. Surfaces to be field welded.
3. Surfaces of high-strength bolted, slip-critical connections.
4. Surfaces to receive sprayed fire-resistive materials (applied fireproofing).
5. Galvanized surfaces.

B. Surface Preparation: Clean surfaces to be painted. Remove loose rust and mill scale and spatter, slag, or flux deposits. Prepare surfaces according to the following specifications and standards:

1. SSPC-SP 2, "Hand Tool Cleaning."
2. SSPC-SP 3, "Power Tool Cleaning."
3. SSPC-SP 7/NACE No. 4, "Brush-off Blast Cleaning."
4. SSPC-SP 11, "Power Tool Cleaning to Bare Metal."
5. SSPC-SP 14/NACE No. 8, "Industrial Blast Cleaning."
6. SSPC-SP 6/NACE No. 3, "Commercial Blast Cleaning."
7. SSPC-SP 10/NACE No. 2, "Near-White Blast Cleaning."
8. SSPC-SP 5/NACE No. 1, "White Metal Blast Cleaning."
9. SSPC-SP 8, "Pickling."

C. Priming: Immediately after surface preparation, apply primer according to manufacturer's written instructions and at rate recommended by SSPC to provide a minimum dry film thickness of 1.5 mils (0.038 mm). Use priming methods that result in full coverage of joints, corners, edges, and exposed surfaces.

1. Stripe paint corners, crevices, bolts, welds, and sharp edges.

2. Apply two coats of shop paint to surfaces that are inaccessible after assembly or erection. Change color of second coat to distinguish it from first.

D. Painting: Prepare steel and apply a one-coat, nonasphaltic primer complying with SSPC-PS Guide 7.00, "Painting System Guide 7.00: Guide for Selecting One-Coat Shop Painting Systems," to provide a dry film thickness of not less than 1.5 mils (0.038 mm).

2.9 GALVANIZING

A. Hot-Dip Galvanized Finish: Apply zinc coating by the hot-dip process to structural steel according to ASTM A 123/A 123M.

1. Fill vent and drain holes that are exposed in the finished Work unless they function as weep holes, by plugging with zinc solder and filing off smooth.
2. Galvanize lintels, shelf angles and welded door frames attached to structural-steel frame and located in exterior walls.

2.10 SOURCE QUALITY CONTROL

A. Testing Agency: Owner will engage a qualified testing agency to perform shop tests and inspections.

1. Provide testing agency with access to places where structural-steel work is being fabricated or produced to perform tests and inspections.

B. Bolted Connections: Inspect and test shop-bolted connections according to RCSC's "Specification for Structural Joints Using ASTM A 325 or A 490 Bolts."

C. Welded Connections: Visually inspect shop-welded connections according to AWS D1.1/D1.1M and the following inspection procedures, at testing agency's option:

1. Liquid Penetrant Inspection: ASTM E 165.
2. Magnetic Particle Inspection: ASTM E 709; performed on root pass and on finished weld. Cracks or zones of incomplete fusion or penetration are not accepted.
3. Ultrasonic Inspection: ASTM E 164.
4. Radiographic Inspection: ASTM E 94.

D. In addition to visual inspection, test and inspect shop-welded shear connectors according to requirements in AWS D1.1/D1.1M for stud welding and as follows:

1. Perform bend tests if visual inspections reveal either a less-than-continuous 360-degree flash or welding repairs to any shear connector.
2. Conduct tests according to requirements in AWS D1.1/D1.1M on additional shear connectors if weld fracture occurs on shear connectors already tested.

E. Prepare test and inspection reports.

PART 3 - EXECUTION

3.1 EXAMINATION

A. Verify, with certified steel erector present, elevations of concrete- and masonry-bearing surfaces and locations of anchor rods, bearing plates, and other embedments for compliance with requirements.

1. Prepare a certified survey of existing conditions. Include bearing surfaces, anchor rods, bearing plates, and other embedments showing dimensions, locations, angles, and elevations.

B. Proceed with installation only after unsatisfactory conditions have been corrected.

3.2 PREPARATION

A. Provide temporary shores, guys, braces, and other supports during erection to keep structural steel secure, plumb, and in alignment against temporary construction loads and loads equal in intensity to design loads. Remove temporary supports when permanent structural steel, connections, and bracing are in place unless otherwise indicated.

1. Do not remove temporary shoring supporting composite deck construction until cast-in-place concrete has attained its design compressive strength.

3.3 ERECTION

A. Set structural steel accurately in locations and to elevations indicated and according to AISC 303 and AISC 360.

B. Baseplates Bearing Plates and Leveling Plates: Clean concrete- and masonry-bearing surfaces of bond-reducing materials, and roughen surfaces prior to setting plates. Clean bottom surface of plates.

1. Set plates for structural members on wedges, shims, or setting nuts as required.
2. Weld plate washers to top of baseplate.
3. Snug-tighten anchor rods after supported members have been positioned and plumbed. Do not remove wedges or shims but, if protruding, cut off flush with edge of plate before packing with grout.
4. Promptly pack grout solidly between bearing surfaces and plates so no voids remain. Neatly finish exposed surfaces; protect grout and allow to cure. Comply with manufacturer's written installation instructions for shrinkage-resistant grouts.

C. Maintain erection tolerances of structural steel within AISC 303, "Code of Standard Practice for Steel Buildings and Bridges."

D. Align and adjust various members that form part of complete frame or structure before permanently fastening. Before assembly, clean bearing surfaces and other surfaces that are in permanent contact with members. Perform necessary adjustments to compensate for discrepancies in elevations and alignment.

1. Level and plumb individual members of structure.
2. Make allowances for difference between temperature at time of erection and mean temperature when structure is completed and in service.

E. Splice members only where indicated.

F. Do not use thermal cutting during erection unless approved by Architect. Finish thermally cut sections within smoothness limits in AWS D1.1/D1.1M.

G. Do not enlarge unfair holes in members by burning or using drift pins. Ream holes that must be enlarged to admit bolts.

H. Shear Connectors: Prepare steel surfaces as recommended by manufacturer of shear connectors. Use automatic end welding of headed-stud shear connectors according to AWS D1.1/D1.1M and manufacturer's written instructions.

3.4 FIELD CONNECTIONS

A. High-Strength Bolts: Install high-strength bolts according to RCSC's "Specification for Structural Joints Using ASTM A 325 or A 490 Bolts" for type of bolt and type of joint specified.

1. Joint Type: Snug tightened unless otherwise noted on drawing.

B. Weld Connections: Comply with AWS D1.1/D1.1M and AWS D1.8/D1.8M for tolerances, appearances, welding procedure specifications, weld quality, and methods used in correcting welding work.

1. Comply with AISC 303 and AISC 360 for bearing, alignment, adequacy of temporary connections, and removal of paint on surfaces adjacent to field welds.
2. Remove backing bars or runoff tabs where indicated, back gouge, and grind steel smooth.
3. Assemble and weld built-up sections by methods that maintain true alignment of axes without exceeding tolerances in AISC 303, "Code of Standard Practice for Steel Buildings and Bridges," for mill material.

3.5 FIELD QUALITY CONTROL

A. Special Inspections: Owner will engage a qualified special inspector to perform the following special inspections:

1. Verify structural-steel materials and inspect steel frame joint details.
2. Verify weld materials and inspect welds.
3. Verify connection materials and inspect high-strength bolted connections.

B. Testing Agency: Owner will engage a qualified testing agency to perform tests and inspections.

C. Bolted Connections: Inspect[and test] bolted connections according to RCSC's "Specification for Structural Joints Using ASTM A 325 or A 490 Bolts."

D. Welded Connections: Visually inspect field welds according to AWS D1.1/D1.1M.

1. In addition to visual inspection, test and inspect field welds according to AWS D1.1/D1.1M and the following inspection procedures, at testing agency's option:

a. Liquid Penetrant Inspection: ASTM E 165.
b. Magnetic Particle Inspection: ASTM E 709; performed on root pass and on finished weld. Cracks or zones of incomplete fusion or penetration are not accepted.
c. Ultrasonic Inspection: ASTM E 164.
d. Radiographic Inspection: ASTM E 94.

E. In addition to visual inspection, test and inspect field-welded shear connectors according to requirements in AWS D1.1/D1.1M for stud welding and as follows:

1. Perform bend tests if visual inspections reveal either a less-than-continuous 360-degree flash or welding repairs to any shear connector.
2. Conduct tests according to requirements in AWS D1.1/D1.1M on additional shear connectors if weld fracture occurs on shear connectors already tested.

3.6 REPAIRS AND PROTECTION

A. Galvanized Surfaces: Clean areas where galvanizing is damaged or missing and repair galvanizing to comply with ASTM A 780/A 780M.

B. Touchup Painting: Immediately after erection, clean exposed areas where primer is damaged or missing and paint with the same material as used for shop painting to comply with SSPC-PA 1 for touching up shop-painted surfaces.

1. Clean and prepare surfaces by SSPC-SP 2 hand-tool cleaning or SSPC-SP 3 power-tool cleaning.

C. Touchup Painting: Cleaning and touchup painting are specified in Section 099113 "Exterior Painting" and Section 099123 "Interior Painting."

D. Touchup Priming: Cleaning and touchup priming are specified in Section 099600 "High-Performance Coatings."

END OF SECTION 051200

SECTION 052100 - STEEL JOIST FRAMING

PART 1 - GENERAL

1.1 RELATED DOCUMENTS

A. Drawings and general provisions of the Contract, including General and Supplementary Conditions and Division 01 Specification Sections, apply to this Section.

1.2 SUMMARY

A. Section Includes:

1. K-series steel joists.
2. KCS-type K-series steel joists.
3. K-series steel joist substitutes.
4. Joist accessories.

B. Related Requirements:

1. Section 042000 "Unit Masonry" for installing bearing plates in unit masonry.

1.3 DEFINITIONS

A. SJI's "Specifications": Steel Joist Institute's "Standard Specifications, Load Tables and Weight Tables for Steel Joists and Joist Girders."

B. Special Joists: Steel joists or joist girders requiring modification by manufacturer to support nonuniform, unequal, or special loading conditions that invalidate load tables in SJI's "Specifications."

1.4 ACTION SUBMITTALS

A. Product Data: For each type of joist, accessory, and product.

B. LEED Submittals:

1. Product Data for Credit MR 4: For products having recycled content, documentation indicating percentages by weight of postconsumer and preconsumer recycled content. Include statement indicating cost for each product having recycled content.
2. Laboratory Test Reports for Credit EQ 4: For primers, documentation indicating that products comply with the testing and product requirements of the California Department of Health Services' "Standard Practice for the Testing of Volatile Organic Emissions from Various Sources Using Small-Scale Environmental Chambers."

C. Shop Drawings:

1. Include layout, designation, number, type, location, and spacing of joists.
2. Include joining and anchorage details, bracing, bridging, and joist accessories; splice and connection locations and details; and attachments to other construction.
3. Indicate locations and details of bearing plates to be embedded in other construction.

1.5 INFORMATIONAL SUBMITTALS

A. Qualification Data: For manufacturer and professional engineer.

B. Welding certificates.

C. Manufacturer certificates.

D. Mill Certificates: For each type of bolt.

E. Comprehensive engineering analysis of special joists signed and sealed by the qualified professional engineer responsible for its preparation.

1.6 QUALITY ASSURANCE

A. Manufacturer Qualifications: A manufacturer certified by SJI to manufacture joists complying with applicable standard specifications and load tables in SJI's "Specifications."

1. Manufacturer's responsibilities include providing professional engineering services for designing special joists to comply with performance requirements.

B. Welding Qualifications: Qualify field-welding procedures and personnel according to AWS D1.1/D1.1M, "Structural Welding Code - Steel."

1.7 DELIVERY, STORAGE, AND HANDLING

A. Deliver, store, and handle joists as recommended in SJI's "Specifications."

B. Protect joists from corrosion, deformation, and other damage during delivery, storage, and handling.

1.8 SEQUENCING

A. Deliver steel bearing plates to be built into masonry construction.

PART 2 - PRODUCTS

2.1 PERFORMANCE REQUIREMENTS

A. Structural Performance: Provide special joists and connections capable of withstanding design loads indicated.

1. Use ASD; data are given at service-load level.
2. Design special joists to withstand design loads with live-load deflections no greater than the following:

a. Floor Joists: Vertical deflection of 1/360 of the span.
b. Roof Joists: Vertical deflection of 1/360 of the span.

B. Recycled Content of Steel Products: Postconsumer recycled content plus one-half of preconsumer recycled content not less than [**25**] [**50**] [**60**] <**Insert number**> percent.

C. Wind uplift: All bar joists at roof shall be designed to resist a net uplift of 25 psf for all roof areas. Locate bridging near the first bottom chord panel point and design all joist members to satisfy this additional loading condition

2.2 K-SERIES STEEL JOISTS

A. Manufacture steel joists of type indicated according to "Standard Specifications for Open Web Steel Joists, K-Series" in SJI's "Specifications," with steel-angle top- and bottom-chord members, underslung ends, and parallel top chord.

1. Joist Type: K-series steel joists and KCS-type K-series steel joists.

B. Steel Joist Substitutes: Manufacture according to "Standard Specifications for Open Web Steel Joists, K-Series" in SJI's "Specifications," with steel-angle or -channel members.

C. Top-Chord Extensions: Extend top chords of joists with SJI's Type S top-chord extensions where indicated, complying with SJI's "Specifications."

D. Extended Ends: Extend bearing ends of joists with SJI's Type R extended ends where indicated, complying with SJI's "Specifications."

E. Do not camber joists.

F. Equip bearing ends of joists with manufacturer's standard beveled ends or sloped shoes if joist slope exceeds 1/4 inch per 12 inches (1:48).

2.3 PRIMERS

A. Low-Emitting Materials: Paints and coatings shall comply with the testing and product requirements of the California Department of Health Services' "Standard Practice for the Testing of Volatile Organic Emissions from Various Sources Using Small-Scale Environmental Chambers."

B. Primer: SSPC-Paint 15, or manufacturer's standard shop primer complying with performance requirements in SSPC-Paint 15.

2.4 JOIST ACCESSORIES

A. Bridging: Provide bridging anchors and number of rows of horizontal or diagonal bridging of material, size, and type required by SJI's "Specifications" for type of joist, chord size, spacing, and span. Furnish additional erection bridging if required for stability.

B. Bridging: Detail and fabricate as indicated and according to SJI's "Specifications." Furnish additional erection bridging if required for stability.

C. Fabricate steel bearing plates from ASTM A 36/A 36M steel with integral anchorages of sizes and thicknesses indicated. Shop prime paint.

D. Steel bearing plates with integral anchorages are specified in Section 055000 "Metal Fabrications."

E. Furnish ceiling extensions, either extended bottom-chord elements or a separate extension unit of enough strength to support ceiling construction. Extend ends to within 1/2 inch (13 mm) of finished wall surface unless otherwise indicated.

F. Carbon-Steel Bolts and Threaded Fasteners: ASTM A 307, Grade A (ASTM F 568M, Property Class 4.6), carbon-steel, hex-head bolts and threaded fasteners; carbon-steel nuts; and flat, unhardened steel washers.

1. Finish: Plain, uncoated.

G. Welding Electrodes: Comply with AWS standards.

H. Furnish miscellaneous accessories including splice plates and bolts required by joist manufacturer to complete joist assembly.

2.5 CLEANING AND SHOP PAINTING

A. Clean and remove loose scale, heavy rust, and other foreign materials from fabricated joists and accessories by hand-tool cleaning, SSPC-SP 2 or power-tool cleaning, SSPC-SP 3.

B. Do not prime paint joists and accessories to receive sprayed fire-resistive materials.

C. Apply one coat of shop primer to joists and joist accessories to be primed to provide a continuous, dry paint film not less than 1 mil (0.025 mm) thick.

PART 3 - EXECUTION

3.1 EXAMINATION

A. Examine supporting substrates, embedded bearing plates, and abutting structural framing for compliance with requirements for installation tolerances and other conditions affecting performance.

B. Proceed with installation only after unsatisfactory conditions have been corrected.

3.2 INSTALLATION

A. Do not install joists until supporting construction is in place and secured.

B. Install joists and accessories plumb, square, and true to line; securely fasten to supporting construction according to SJI's "Specifications," joist manufacturer's written recommendations, and requirements in this Section.

1. Before installation, splice joists delivered to Project site in more than one piece.
2. Space, adjust, and align joists accurately in location before permanently fastening.
3. Install temporary bracing and erection bridging, connections, and anchors to ensure that joists are stabilized during construction.
4. Delay rigidly connecting bottom-chord extensions to columns or supports until dead loads are applied.

C. Field weld joists to supporting steel bearing plates and framework. Coordinate welding sequence and procedure with placement of joists. Comply with AWS requirements and procedures for welding, appearance and quality of welds, and methods used in correcting welding work.

D. Bolt joists to supporting steel framework using carbon-steel bolts.

E. Bolt joists to supporting steel framework using high-strength structural bolts. Comply with Research Council on Structural Connection's "Specification for Structural Joints Using ASTM A 325 or ASTM A 490 Bolts" for high-strength structural bolt installation and tightening requirements.

F. Install and connect bridging concurrently with joist erection, before construction loads are applied. Anchor ends of bridging lines at top and bottom chords if terminating at walls or beams.

3.3 FIELD QUALITY CONTROL

A. Testing Agency: Owner will engage a qualified independent testing and inspecting agency to inspect field welds and bolted connections and to perform field tests and inspections and prepare test and inspection reports.

B. Visually inspect field welds according to AWS D1.1/D1.1M.

1. In addition to visual inspection, test field welds according to AWS D1.1/D1.1M and the following procedures, as applicable:

    a. Liquid Penetrant Inspection: ASTM E 165.
    b. Magnetic Particle Inspection: ASTM E 709.
    c. Ultrasonic Testing: ASTM E 164.
    d. Radiographic Testing: ASTM E 94.

C. Visually inspect bolted connections.

D. Correct deficiencies in Work that test and inspection reports have indicated are not in compliance with specified requirements.

E. Perform additional testing to determine compliance of corrected Work with specified requirements.

3.4 PROTECTION

A. Repair damaged galvanized coatings on galvanized items with galvanized repair paint according to ASTM A 780 and manufacturer's written instructions.

B. Touchup Painting: After installation, promptly clean, prepare, and prime or reprime field connections, rust spots, and abraded surfaces of prime-painted joists, bearing plates, abutting structural steel, and accessories.

1. Clean and prepare surfaces by hand-tool cleaning according to SSPC-SP 2, or power-tool cleaning according to SSPC-SP 3.
2. Apply a compatible primer of same type as primer used on adjacent surfaces.

C. Provide final protection and maintain conditions, in a manner acceptable to manufacturer and Installer, that ensure that joists and accessories are without damage or deterioration at time of Substantial Completion.

END OF SECTION 052100

SECTION 053100 - STEEL DECKING

PART 1 - GENERAL

1.1 RELATED DOCUMENTS

A. Drawings and general provisions of the Contract, including General and Supplementary Conditions and Division 01 Specification Sections, apply to this Section.

1.2 SUMMARY

A. Section Includes:

1. Roof deck.
2. Composite floor deck.

B. Related Requirements:

1. Section 033000 "Cast-in-Place Concrete" for normal-weight and lightweight structural concrete fill over steel deck.
2. Section 051200 "Structural Steel Framing" for shop- and field-welded shear connectors.
3. Section 055000 "Metal Fabrications" for framing deck openings with miscellaneous steel shapes.

1.3 ACTION SUBMITTALS

A. Product Data: For each type of deck, accessory, and product indicated, including self-drilling screws.

B. Shop Drawings:

1. Include layout and types of deck panels, anchorage details, reinforcing channels, pans, cut deck openings, special jointing, accessories, and attachments to other construction.

2. Include data on self-drilling screws and spacing to comply with design loads/criteria.

1.4 INFORMATIONAL SUBMITTALS

A. Product Certificates: For each type of steel deck.

B. Product Test Reports: Based on evaluation of comprehensive tests performed by a qualified testing agency, indicating that each of the following complies with requirements:

1. Power-actuated mechanical fasteners.

C. Field quality-control reports.

1.5 QUALITY ASSURANCE

A. Testing Agency Qualifications: Qualified according to ASTM E 329 for testing indicated.

B. Welding Qualifications: Qualify procedures and personnel according to AWS D1.3, "Structural Welding Code - Sheet Steel."

C. FM Global Listing: Provide steel roof deck evaluated by FM Global and listed in its "Approval Guide, Building Materials" for Class 1 fire rating and Class 1-90 windstorm ratings.

1.6 DELIVERY, STORAGE, AND HANDLING

A. Protect steel deck from corrosion, deformation, and other damage during delivery, storage, and handling.

B. Stack steel deck on platforms or pallets and slope to provide drainage. Protect with a waterproof covering and ventilate to avoid condensation.

1. Protect and ventilate acoustical cellular roof deck with factory-installed insulation to maintain insulation free of moisture.

PART 2 - PRODUCTS

2.1 PERFORMANCE REQUIREMENTS

A. AISI Specifications: Comply with calculated structural characteristics of steel deck according to AISI's "North American Specification for the Design of Cold-Formed Steel Structural Members."

B. Fire-Resistance Ratings: Comply with ASTM E 119; testing by a qualified testing agency. Identify products with appropriate markings of applicable testing agency.

1. Indicate design designations from UL's "Fire Resistance Directory" or from the listings of another qualified testing agency.

C. Recycled Content of Steel Products: Postconsumer recycled content plus one-half of preconsumer recycled content not less than 25 percent.

D. Low-Emitting Materials: Paints and coatings shall comply with the testing and product requirements of the California Department of Health Services' "Standard Practice for the Testing of Volatile Organic Emissions from Various Sources Using Small-Scale Environmental Chambers."

2.2 ROOF DECK

A. Manufacturers: Subject to compliance with requirements, available manufacturers offering products that may be incorporated into the Work include, but are not limited to, the following:

1. ASC Profiles, Inc.; a Blue Scope Steel company.
2. Canam United States; Canam Group Inc.
3. CMC Joist & Deck.
4. Consolidated Systems, Inc.; Metal Dek Group.
5. Cordeck.
6. DACS, Inc.
7. Epic Metals Corporation.
8. Marlyn Steel Decks, Inc.
9. New Millennium Building Systems, LLC.
10. Nucor Corp.; Vulcraft Group.

11. Roof Deck, Inc.
12. Valley Joist; Subsidiary of EBSCO Industries, Inc.
13. Verco Manufacturing Co.
14. Wheeling Corrugating Company; Div. of Wheeling-Pittsburgh Steel Corporation.

B. Roof Deck: Fabricate panels, without top-flange stiffening grooves, to comply with "SDI Specifications and Commentary for Steel Roof Deck," in SDI Publication No. 31, and with the following:

1. Galvanized-Steel Sheet: ASTM A 653/A 653M, Structural Steel (SS), Grade 40 (275), G60 (Z180) zinc coating.
2. Deck Profile: As indicated.
3. Profile Depth: As indicated.
4. Design Uncoated-Steel Thickness: As indicated.
5. Span Condition: Triple span or more.
6. Side Laps: Overlapped or interlocking seam at Contractor's option.

2.3 COMPOSITE FLOOR DECK

A. Manufacturers: Subject to compliance with requirements, available manufacturers offering products that may be incorporated into the Work include, but are not limited to, the following:

1. ASC Profiles, Inc.; a Blue Scope Steel company.
2. Canam United States; Canam Group Inc.
3. CMC Joist & Deck.
4. Consolidated Systems, Inc.; Metal Dek Group.
5. Cordeck.
6. DACS, Inc.
7. Epic Metals Corporation.
8. Marlyn Steel Decks, Inc.
9. New Millennium Building Systems, LLC.
10. Nucor Corp.; Vulcraft Group.
11. Roof Deck, Inc.
12. Verco Manufacturing Co.
13. Wheeling Corrugating Company; Div. of Wheeling-Pittsburgh Steel Corporation.

B. Composite Floor Deck: Fabricate panels, with integrally embossed or raised pattern ribs and interlocking side laps, to comply with "SDI Specifications and Commentary for Composite Steel Floor Deck," in SDI Publication No. 31, with the minimum section properties indicated, and with the following:

1. Galvanized-Steel Sheet: ASTM A 653/A 653M, Structural Steel (SS), Grade 40 (275), G60 (Z180) zinc coating.
2. Profile Depth: As indicated.
3. Design Uncoated-Steel Thickness: As indicated on drawings.
4. Span Condition: Triple span or more unless noted otherwise.

2.4 ACCESSORIES

A. General: Provide manufacturer's standard accessory materials for deck that comply with requirements indicated.

B. Mechanical Fasteners: Corrosion-resistant, low-velocity, power-actuated or pneumatically driven carbon-steel fasteners; or self-drilling, self-threading screws. Use self-drilling screws for roof deck on cold-formed trusses.

C. Side-Lap Fasteners: Corrosion-resistant, hexagonal washer head; self-drilling, carbon-steel screws, No. 10 (4.8-mm) minimum diameter.

D. Flexible Closure Strips: Vulcanized, closed-cell, synthetic rubber.

E. Miscellaneous Sheet Metal Deck Accessories: Steel sheet, minimum yield strength of 33,000 psi (230 MPa), not less than 0.0359-inch (0.91-mm) design uncoated thickness, of same material and finish as deck; of profile indicated or required for application.

F. Pour Stops and Girder Fillers: Steel sheet, minimum yield strength of 33,000 psi (230 MPa), of same material and finish as deck, and of thickness and profile indicated and if not indicated recommended by SDI Publication No. 31 for overhang and slab depth.

G. Column Closures, End Closures, Z-Closures, and Cover Plates: Steel sheet, of same material, finish, and thickness as deck unless otherwise indicated.

H. Piercing Hanger Tabs: Piercing steel sheet hanger attachment devices for use with floor deck.

I. Weld Washers: Uncoated steel sheet, shaped to fit deck rib, 0.0747 inch (1.90 mm) thick, with factory-punched hole of 3/8-inch (9.5-mm) minimum diameter.

J. Flat Sump Plates: Single-piece steel sheet, 0.0747 inch (1.90 mm) thick, of same material and finish as deck. For drains, cut holes in the field.

K. Recessed Sump Pans: Single-piece steel sheet, 0.0747 inch (1.90 mm) thick, of same material and finish as deck, with 3-inch- (76-mm-) wide flanges and sloped recessed pans of 1-1/2-inch (38-mm) minimum depth. For drains, cut holes in the field.

L. Galvanizing Repair Paint: ASTM A 780, SSPC-Paint 20 or MIL-P-21035B, with dry film containing a minimum of 94 percent zinc dust by weight.

PART 3 - EXECUTION

3.1 EXAMINATION

A. Examine supporting frame and field conditions for compliance with requirements for installation tolerances and other conditions affecting performance.

B. Proceed with installation only after unsatisfactory conditions have been corrected.

3.2 INSTALLATION, GENERAL

A. Install deck panels and accessories according to applicable specifications and commentary in SDI Publication No. 31, manufacturer's written instructions, and requirements in this Section.

B. Install temporary shoring before placing deck panels if required to meet deflection limitations.

C. Locate deck bundles to prevent overloading of supporting members.

D. Place deck panels on supporting frame and adjust to final position with ends accurately aligned and bearing on supporting frame before being permanently fastened. Do not stretch or contract side-lap interlocks.

1. Align cellular deck panels over full length of cell runs and align cells at ends of abutting panels.

E. Place deck panels flat and square and fasten to supporting frame without warp or deflection.

F. Cut and neatly fit deck panels and accessories around openings and other work projecting through or adjacent to deck.

G. Provide additional reinforcement and closure pieces at openings as required for strength, continuity of deck, and support of other work.

H. Comply with AWS requirements and procedures for manual shielded metal arc welding, appearance and quality of welds, and methods used for correcting welding work.

I. Mechanical fasteners may be used in lieu of welding to fasten deck. Locate mechanical fasteners and install according to deck manufacturer's written instructions.

3.3 ROOF-DECK INSTALLATION

A. Fasten roof-deck panels to steel supporting members by arc spot (puddle) welds of the surface diameter indicated or arc seam welds with an equal perimeter that is not less than 1-1/2 inches (38 mm) long, and as follows:

1. Weld Diameter: 5/8 inch (16 mm) nominal.
2. Weld Spacing: Weld edge and interior ribs of deck units with a minimum of two welds per deck unit at each support. Space welds 12 inches (305 mm) apart in the field of roof and 6 inches (150 mm) apart in roof corners and perimeter, based on roof-area definitions in FMG Loss Prevention Data Sheet 1-28.
3. Weld Washers: Install weld washers at each weld location as required.
4. For cold-formed trusses use #12 self-drilling Tek screws.

B. Side-Lap and Perimeter Edge Fastening: Fasten side laps and perimeter edges of panels between supports, at intervals not exceeding the lesser of 1/2 of the span or 18 inches (457 mm) and as follows:

1. Mechanically fasten with self-drilling, No. 10 (4.8-mm-) diameter or larger, carbon-steel screws.

C. End Bearing: Install deck ends over supporting frame with a minimum end bearing of 1-1/2 inches (38 mm), with end joints as follows:

1. End Joint: Lapped 2 inches (51 mm) minimum or butted at Contractor's option.

D. Roof Sump Pans and Sump Plates: Install over openings provided in roof deck and mechanically fasten flanges to top of deck. Space mechanical fasteners not more than 12 inches (305 mm) apart with at least one fastener at each corner.

1. Install reinforcing channels or zees in ribs to span between supports and mechanically fasten.

E. Miscellaneous Roof-Deck Accessories: Install ridge and valley plates, finish strips, end closures, and reinforcing channels according to deck manufacturer's written instructions. Weld or mechanically fasten to substrate to provide a complete deck installation.

1. Weld cover plates at changes in direction of roof-deck panels unless otherwise indicated.

F. Flexible Closure Strips: Install flexible closure strips over partitions, walls, and where indicated. Install with adhesive according to manufacturer's written instructions to ensure complete closure.

3.4 FLOOR-DECK INSTALLATION

A. Fasten floor-deck panels to steel supporting members by arc spot (puddle) welds of the surface diameter indicated and as follows:

1. Weld Diameter: 5/8 inch (16 mm)nominal.
2. Weld Spacing: Weld edge ribs of panels at each support. Space additional welds an average of 12 inches (305 mm) apart, but not more than 18 inches (457 mm) apart.
3. Weld Spacing: Space and locate welds as indicated.
4. Weld Washers: Install weld washers at each weld location.

B. Side-Lap and Perimeter Edge Fastening: Fasten side laps and perimeter edges of panels between supports, at intervals not exceeding the lesser of half of the span or 36 inches (914 mm), and as follows:

1. Mechanically fasten with self-drilling, No. 10 (4.8-mm-) diameter or larger, carbon-steel screws.
2. Mechanically clinch or button punch.
3. Fasten with a minimum of 1-1/2-inch- (38-mm-) long welds.

C. End Bearing: Install deck ends over supporting frame with a minimum end bearing of 1-1/2 inches (38 mm), with end joints as follows:

1. End Joints: Lapped or butted at Contractor's option.

D. Pour Stops and Girder Fillers: Weld steel sheet pour stops and girder fillers to supporting structure according to SDI recommendations unless otherwise indicated.

E. Floor-Deck Closures: Weld steel sheet column closures, cell closures, and Z-closures to deck, according to SDI recommendations, to provide tight-fitting closures at open ends of ribs and sides of deck.

F. Install piercing hanger tabs at 14 inches (355 mm) apart in both directions, within 9 inches (228 mm) of walls at ends, and not more than 12 inches (305 mm) from walls at sides unless otherwise indicated.

3.5 FIELD QUALITY CONTROL

A. Testing Agency: Owner will engage a qualified testing agency to perform tests and inspections.

B. Field welds will be subject to inspection.

C. Testing agency will report inspection results promptly and in writing to Contractor and Architect.

D. Remove and replace work that does not comply with specified requirements.

E. Additional inspecting, at Contractor's expense, will be performed to determine compliance of corrected work with specified requirements.

3.6 PROTECTION

A. Galvanizing Repairs: Prepare and repair damaged galvanized coatings on both surfaces of deck with galvanized repair paint according to ASTM A 780 and manufacturer's written instructions.

B. Repair Painting: Wire brush and clean rust spots, welds, and abraded areas on both surfaces of prime-painted deck immediately after installation, and apply repair paint.

1. Apply repair paint, of same color as adjacent shop-primed deck, to bottom surfaces of deck exposed to view.
2. Wire brushing, cleaning, and repair painting of bottom deck surfaces are included in Section 099113 "Exterior Painting" and Section 099123 "Interior Painting."

C. Repair Painting: Wire brushing, cleaning, and repair painting of rust spots, welds, and abraded areas of both deck surfaces are included in Section 099113 "Exterior Painting" and Section 099123 "Interior Painting."

D. Provide final protection and maintain conditions to ensure that steel deck is without damage or deterioration at time of Substantial Completion.

END OF SECTION 053100

SECTION 054000 - COLD-FORMED METAL FRAMING

PART 1 - GENERAL

1.1 RELATED DOCUMENTS

A. Drawings and general provisions of the Contract, including General and Supplementary Conditions and Division 01 Specification Sections, apply to this Section.

1.2 SUMMARY

A. Section Includes:

1. Exterior non-load-bearing wall framing.
2. Ceiling joist framing.
3. Soffit framing.
4. All members indicated on drawings as "Cold-Formed" and/or 20 gauge or heavier.
5. Engineered design, calculations and shop drawings signed and sealed by a Delaware Professional Engineer.

B. Related Requirements:

1. Section 055000 "Metal Fabrications" for masonry shelf angles and connections.
2. Section 092116.23 "Gypsum Board Shaft Wall Assemblies" for interior non-load-bearing, metal-stud-framed, shaft-wall assemblies.
3. Section 092216 "Non-Structural Metal Framing" for interior non-load-bearing, metal-stud framing and ceiling-suspension assemblies.

1.3 PREINSTALLATION MEETINGS

A. Preinstallation Conference: Conduct conference at Project site.

1.4 ACTION SUBMITTALS

A. Product Data: For each type of cold-formed steel framing product and accessory.

B. Shop Drawings:

1. Include layout, spacings, sizes, thicknesses, and types of cold-formed steel framing; fabrication; and fastening and anchorage details, including mechanical fasteners.
2. Indicate reinforcing channels, opening framing, supplemental framing, strapping, bracing, bridging, splices, accessories, connection details, and attachment to adjoining work.

C. Delegated-Design Submittal: For cold-formed steel framing. Provide Engineered design calculations and shop drawings signed and sealed by an engineer licensed in the State of Delaware.

1.5 INFORMATIONAL SUBMITTALS

A. Product Test Reports: For each listed product, for tests performed by manufacturer and witnessed by a qualified testing agency or a qualified testing agency.
   1. Expansion anchors.
   2. Power-actuated anchors.
   3. Mechanical fasteners.

1.6 QUALITY ASSURANCE

A. Testing Agency Qualifications: Qualified according to ASTM E 329 for testing indicated.

B. Product Tests: Mill certificates or data from a qualified independent testing agency, or in-house testing with calibrated test equipment indicating steel sheet complies with requirements, including base-metal thickness, yield strength, tensile strength, total elongation, chemical requirements, and metallic-coating thickness.

C. Welding Qualifications: Qualify procedures and personnel according to the following:

   1. AWS D1.1/D1.1M, "Structural Welding Code - Steel."
   2. AWS D1.3/D1.3M, "Structural Welding Code - Sheet Steel."

D. Engineering Responsibility: Preparation of Shop Drawings, design calculations, and other structural data bay a qualified professional engineer

E. Professional Engineer Qualifications: A Professional Engineer who is legally qualified to practice in jurisdiction where project is located (State of Delaware) and who is experience in providing engineering services of the kind indicated.

1.7 DELIVERY, STORAGE, AND HANDLING

A. Protect cold-formed steel framing from corrosion, moisture staining, deformation, and other damage during delivery, storage, and handling.

PART 2 - PRODUCTS

2.1 MANUFACTURERS

A. Manufacturers: Subject to compliance with requirements, available manufacturers offering products that may be incorporated into the Work include, but are not limited to, the following:

   1. AllSteel & Gypsum Products, Inc.
   2. California Expanded Metal Products Company.
   3. ClarkWestern Building Systems, Inc.
   4. Consolidated Fabricators Corp.; Building Products Division.
   5. Craco Mfg., Inc.
   6. Custom Stud Inc.
   7. Design Shapes in Steel.
   8. Dietrich Metal Framing; a Worthington Industries Company.
   9. Formetal Co. Inc. (The).

10. MarinoWARE.
11. Nuconsteel; a Nucor Company.
12. Olmar Supply, Inc.
13. Quail Run Building Materials, Inc.
14. SCAFCO Corporation.
15. Southeastern Stud & Components, Inc.
16. State Building Products, Inc.
17. Steel Construction Systems.
18. Steel Network, Inc. (The).
19. Steel Structural Systems.
20. Steeler, Inc.
21. Super Stud Building Products, Inc.
22. Telling Industries, LLC.
23. United Metal Products, Inc.
24. United Steel Manufacturing.

2.2 PERFORMANCE REQUIREMENTS

A. Delegated Design: Engage a qualified Delaware professional engineer, as defined in Section 014000 "Quality Requirements," to design cold-formed steel framing.

B. Structural Performance: Provide cold-formed steel framing capable of withstanding design loads within limits and under conditions indicated.

1. Design Loads: As indicated.
2. Deflection Limits: Design framing systems to withstand design loads without deflections greater than the following:

   a. Exterior Non-Load-Bearing Framing: Horizontal deflection of 1/600 of the wall height.
   b. Ceiling Joist Framing: Vertical deflection of 1/360 of the span for live loads and 1/240 for total loads of the span.

3. Design framing systems to provide for movement of framing members located outside the insulated building envelope without damage or overstressing, sheathing failure, connection failure, undue strain on fasteners and anchors, or other detrimental effects when subject to a maximum ambient temperature change of 120 deg F (67 deg C).
4. Design framing system to maintain clearances at openings, to allow for construction tolerances, and to accommodate live load deflection of primary building structure as follows:

   a. Upward and downward movement of 1 inch (25 mm).

5. Design exterior non-load-bearing wall framing to accommodate horizontal deflection without regard for contribution of sheathing materials.

C. Cold-Formed Steel Framing Design Standards:

1. Wall Studs: AISI S211.
2. Headers: AISI S212.

D. AISI Specifications and Standards: Unless more stringent requirements are indicated, comply with AISI S100 and AISI S200.

E. Fire-Resistance Ratings: Comply with ASTM E 119; testing by a qualified testing agency. Identify products with appropriate markings of applicable testing agency.

1. Indicate design designations from UL's "Fire Resistance Directory" or from the listings of another qualified testing agency.

2.3 COLD-FORMED STEEL FRAMING, GENERAL

A. Recycled Content of Steel Products: Postconsumer recycled content plus one-half of preconsumer recycled content not less than 25 percent.

B. Steel Sheet: ASTM A 1003/A 1003M, Structural Grade, Type H, metallic coated, of grade and coating weight as follows:

1. Grade: As required by structural performance.
2. Coating: G60 (Z180).

C. Steel Sheet for Vertical Deflection and Drift Clips: ASTM A 653/A 653M, structural steel, zinc coated, of grade and coating as follows:

1. Grade: 33 (230) or 50 (340), Class 1.
2. Coating: G60 (Z180).

2.4 EXTERIOR NON-LOAD-BEARING WALL FRAMING

A. Steel Studs: Manufacturer's standard C-shaped steel studs, of web depths indicated, punched, with stiffened flanges, and as follows:

1. Minimum Base-Metal Thickness: See drawings.
2. Minimum Flange Width: See drawings.
3. Minimum Section Properties: See drawings.

B. Steel Track: Manufacturer's standard U-shaped steel track, of web depths indicated, unpunched, with unstiffened flanges, and as follows:

1. Minimum Base-Metal Thickness: Matching steel studs.
2. Flange Width: 1-1/4 inches (32 mm).

C. Vertical Deflection Clips: Manufacturer's standard bypass or head clips, capable of accommodating upward and downward vertical displacement of primary structure through positive mechanical attachment to stud web.

1. Manufacturers: Subject to compliance with requirements, available manufacturers offering products that may be incorporated into the Work include, but are not limited to, the following:

a. AllSteel & Gypsum Products, Inc.
b. ClarkWestern Building Systems, Inc.
c. Dietrich Metal Framing; a Worthington Industries company.
d. MarinoWARE.
e. SCAFCO Corporation.
f. Steel Network, Inc. (The).
g. Steeler, Inc.

D. Single Deflection Track: Manufacturer's single, deep-leg, U-shaped steel track; unpunched, with unstiffened flanges, of web depth to contain studs while allowing free vertical movement, with flanges designed to support horizontal loads and transfer them to the primary structure, and as follows:

1. Minimum Base-Metal Thickness: As required by design (18 gauge minimum), or as indicated.
2. Flange Width: 1 inch (25 mm) plus the design gap for one-story structures and 1 inch (25 mm) plus twice the design gap for other applications.

E. Double Deflection Tracks: Manufacturer's double, deep-leg, U-shaped steel tracks, consisting of nested inner and outer tracks; unpunched, with unstiffened flanges.

1. Outer Track: Of web depth to allow free vertical movement of inner track, with flanges designed to support horizontal loads and transfer them to the primary structure, and as follows:

a. Minimum Base-Metal Thickness: As required by design (18 gauge minimum).
b. Flange Width: 1 inch (25 mm) plus the design gap for one-story structures and 1 inch (25 mm) plus twice the design gap for other applications.

2. Inner Track: Of web depth indicated, and as follows:

a. Minimum Base-Metal Thickness: As required by design (18 gauge minimum).
b. Flange Width: 1 inch (25 mm) plus the design gap for one-story structures and 1 inch (25 mm) plus twice the design gap for other applications.

F. Drift Clips: Manufacturer's standard bypass or head clips, capable of isolating wall stud from upward and downward vertical displacement and lateral drift of primary structure through positive mechanical attachment to stud web and structure.

2.5 CEILING JOIST FRAMING

A. Steel Ceiling Joists: Manufacturer's standard C-shaped steel sections, of web depths indicated, with stiffened flanges, and as follows:

1. Minimum Base-Metal Thickness: As required or indicated.
2. Flange Width: 1-5/8 inches (41 mm) minimum.

2.6 SOFFIT FRAMING

A. Exterior Soffit Frame: Manufacturer's standard C-shaped steel sections, of web depths indicated, with stiffened flanges, and as follows:

1. Minimum Base-Metal Thickness: As required or indicated.
2. Flange Width: 1-5/8 inches (41 mm), minimum.

2.7 FRAMING ACCESSORIES

A. Fabricate steel-framing accessories from steel sheet, ASTM A 1003/A 1003M, Structural Grade, Type H, metallic coated, of same grade and coating weight used for framing members.

B. Provide accessories of manufacturer's standard thickness and configuration, unless otherwise indicated, as follows:

1. Supplementary framing.
2. Bracing, bridging, and solid blocking.
3. Web stiffeners.
4. Anchor clips.
5. End clips.
6. Foundation clips.
7. Gusset plates.
8. Stud kickers and knee braces.
9. Joist hangers and end closures.
10. Hole reinforcing plates.
11. Backer plates.

2.8 ANCHORS, CLIPS, AND FASTENERS

A. Steel Shapes and Clips: ASTM A 36/A 36M, zinc coated by hot-dip process according to ASTM A 123/A 123M.

B. Anchor Bolts: ASTM F 1554, Grade 36, threaded carbon-steel hex-headed bolts and carbon-steel nuts; and flat, hardened-steel washers; zinc coated by hot-dip process according to ASTM A 153/A 153M, Class C.

C. Expansion Anchors: Fabricated from corrosion-resistant materials, with allowable load or strength design capacities calculated according to ICC-ES AC193 and ACI 318 greater than or equal to the design load, as determined by testing per ASTM E 488 conducted by a qualified testing agency.

D. Power-Actuated Anchors: Fastener system of type suitable for application indicated, fabricated from corrosion-resistant materials, with allowable load capacities calculated according to ICC-ES AC70, greater than or equal to the design load, as determined by testing per ASTM E 1190 conducted by a qualified testing agency.

E. Mechanical Fasteners: ASTM C 1513, corrosion-resistant-coated, self-drilling, self-tapping, steel drill screws.

1. Head Type: Low-profile head beneath sheathing, manufacturer's standard elsewhere.

F. Welding Electrodes: Comply with AWS standards.

2.9 MISCELLANEOUS MATERIALS

A. Galvanizing Repair Paint: SSPC-Paint 20 or MIL-P-21035B.

B. Cement Grout: Portland cement, ASTM C 150, Type I; and clean, natural sand, ASTM C 404. Mix at ratio of 1 part cement to 2-1/2 parts sand, by volume, with minimum water required for placement and hydration.

C. Nonmetallic, Nonshrink Grout: Premixed, nonmetallic, noncorrosive, nonstaining grout containing selected silica sands, portland cement, shrinkage-compensating agents, and plasticizing and water-reducing agents, complying with ASTM C 1107/C 1107M, with fluid consistency and 30-minute working time.

D. Shims: Load bearing, high-density multimonomer plastic, and nonleaching; or of cold-formed steel of same grade and coating as framing members supported by shims.

E. Sealer Gaskets: Closed-cell neoprene foam, 1/4 inch (6.4 mm) thick, selected from manufacturer's standard widths to match width of bottom track or rim track members.

2.10 FABRICATION

A. Fabricate cold-formed steel framing and accessories plumb, square, and true to line, and with connections securely fastened, according to referenced AISI's specifications and standards, manufacturer's written instructions, and requirements in this Section.

1. Fabricate framing assemblies using jigs or templates.
2. Cut framing members by sawing or shearing; do not torch cut.
3. Fasten cold-formed steel framing members by welding, screw fastening, clinch fastening, pneumatic pin fastening, or riveting as standard with fabricator. Wire tying of framing members is not permitted.

    a. Comply with AWS D1.3/D1.3M requirements and procedures for welding, appearance and quality of welds, and methods used in correcting welding work.
    b. Locate mechanical fasteners and install according to Shop Drawings, with screw penetrating joined members by no fewer than three exposed screw threads.

4. Fasten other materials to cold-formed steel framing by welding, bolting, pneumatic pin fastening, or screw fastening, according to Shop Drawings.

B. Reinforce, stiffen, and brace framing assemblies to withstand handling, delivery, and erection stresses. Lift fabricated assemblies to prevent damage or permanent distortion.

C. Fabrication Tolerances: Fabricate assemblies level, plumb, and true to line to a maximum allowable tolerance variation of 1/8 inch in 10 feet (1:960) and as follows:

1. Spacing: Space individual framing members no more than plus or minus 1/8 inch (3 mm) from plan location. Cumulative error shall not exceed minimum fastening requirements of sheathing or other finishing materials.
2. Squareness: Fabricate each cold-formed steel framing assembly to a maximum out-of-square tolerance of 1/8 inch (3 mm).

PART 3 - EXECUTION

3.1 EXAMINATION

A. Examine supporting substrates and abutting structural framing for compliance with requirements for installation tolerances and other conditions affecting performance of the Work.

B. Proceed with installation only after unsatisfactory conditions have been corrected.

3.2 PREPARATION

A. Before sprayed fire-resistive materials are applied, attach continuous angles, supplementary framing, or tracks to structural members indicated to receive sprayed fire-resistive materials.

B. After applying sprayed fire-resistive materials, remove only as much of these materials as needed to complete installation of cold-formed framing without reducing thickness of fire-resistive materials below

that are required to obtain fire-resistance rating indicated. Protect remaining fire-resistive materials from damage.

C. Install load bearing shims or grout between the underside of load-bearing wall bottom track and the top of foundation wall or slab at locations with a gap larger than 1/4 inch (6 mm) to ensure a uniform bearing surface on supporting concrete or masonry construction.

D. Install sealer gaskets at the underside of wall bottom track or rim track and at the top of foundation wall or slab at stud or joist locations.

3.3 INSTALLATION, GENERAL

A. Cold-formed steel framing may be shop or field fabricated for installation, or it may be field assembled.

B. Install cold-formed steel framing according to AISI S200 and to manufacturer's written instructions unless more stringent requirements are indicated.

C. Install shop- or field-fabricated, cold-formed framing and securely anchor to supporting structure.

1. Screw, bolt, or weld wall panels at horizontal and vertical junctures to produce flush, even, true-to-line joints with maximum variation in plane and true position between fabricated panels not exceeding 1/16 inch (1.6 mm).

D. Install cold-formed steel framing and accessories plumb, square, and true to line, and with connections securely fastened.

1. Cut framing members by sawing or shearing; do not torch cut.
2. Fasten cold-formed steel framing members by welding, screw fastening, clinch fastening, or riveting. Wire tying of framing members is not permitted.

a. Comply with AWS D1.3/D1.3M requirements and procedures for welding, appearance and quality of welds, and methods used in correcting welding work.
b. Locate mechanical fasteners and install according to Shop Drawings, and complying with requirements for spacing, edge distances, and screw penetration.

E. Install framing members in one-piece lengths unless splice connections are indicated for track or tension members.

F. Install temporary bracing and supports to secure framing and support loads comparable in intensity to those for which structure was designed. Maintain braces and supports in place, undisturbed, until entire integrated supporting structure has been completed and permanent connections to framing are secured.

G. Do not bridge building expansion joints with cold-formed steel framing. Independently frame both sides of joints.

H. Install insulation, specified in Section 072100 "Thermal Insulation," in built-up exterior framing members, such as headers, sills, boxed joists, and multiple studs at openings, that are inaccessible on completion of framing work.

I. Fasten hole reinforcing plate over web penetrations that exceed size of manufacturer's approved or standard punched openings.

J. Erection Tolerances: Install cold-formed steel framing level, plumb, and true to line to a maximum allowable tolerance variation of 1/8 inch in 10 feet (1:960) and as follows:

1. Space individual framing members no more than plus or minus 1/8 inch (3 mm) from plan location. Cumulative error shall not exceed minimum fastening requirements of sheathing or other finishing materials.

3.4 EXTERIOR NON-LOAD-BEARING WALL INSTALLATION

A. Install continuous tracks sized to match studs. Align tracks accurately and securely anchor to supporting structure as indicated.

B. Fasten both flanges of studs to top and bottom track unless otherwise indicated. Space studs as follows:

1. Stud Spacing: 16 inches (406 mm) unless noted otherwise.

C. Set studs plumb, except as needed for diagonal bracing or required for nonplumb walls or warped surfaces and similar requirements.

D. Isolate non-load-bearing steel framing from building structure to prevent transfer of vertical loads while providing lateral support.

1. Install single deep-leg deflection tracks and anchor to building structure.
2. Install double deep-leg deflection tracks and anchor outer track to building structure.
3. Connect vertical deflection clips to bypassing or infill studs and anchor to building structure.
4. Connect drift clips to cold-formed metal framing and anchor to building structure.

E. Install horizontal bridging in wall studs, spaced vertically in rows indicated on Shop Drawings but not more than 48 inches (1220 mm) apart. Fasten at each stud intersection.

1. Top Bridging for Single Deflection Track: Install row of horizontal bridging within 12 inches (305 mm) of single deflection track. Install a combination of bridging and stud or stud-track solid blocking of width and thickness matching studs, secured to stud webs or flanges.

   a. Install solid blocking at centers indicated on Shop Drawings.

2. Bridging: Cold-rolled steel channel, welded or mechanically fastened to webs of punched studs.
3. Bridging: Combination of flat, taut, steel sheet straps of width and thickness indicated and stud-track solid blocking of width and thickness to match studs. Fasten flat straps to stud flanges and secure solid blocking to stud webs or flanges.
4. Bridging: Proprietary bridging bars installed according to manufacturer's written instructions.

F. Install miscellaneous framing and connections, including stud kickers, web stiffeners, clip angles, continuous angles, anchors, and fasteners, to provide a complete and stable wall-framing system.

3.5 CEILING JOIST AND SOFFIT INSTALLATION

A. Install perimeter joist track sized to match joists. Align and securely anchor or fasten track to supporting structure at corners, ends, and spacings indicated on Shop Drawings.

B. Install joists bearing on supporting frame, level, straight, and plumb; adjust to final position, brace, and reinforce. Fasten joists to both flanges of joist track.

C. Space joists not more than 2 inches (51 mm) from abutting walls, and as follows:

1. Joist spacing: 16 inches (406 mm) or as indicated.

D. Frame openings with built-up joist headers consisting of joist and joist track, or another combination of connected joists if indicated.

E. Install bridging at intervals indicated on Shop Drawings. Fasten bridging at each joist intersection as follows:

1. Bridging: Joist –track solid blocking of width and thickness indicated, secured to joist webs.

2. Bridging: Combination of flat, taut, steel sheet straps of width and thickness indicated and joist-track solid blocking of width and thickness indicated. Fasten flat straps to bottom flange of joists and secure solid blocking to joist webs.

F. Secure joists to load-bearing interior walls to prevent lateral movement of bottom flange.

G. Install miscellaneous joist framing and connections, including web stiffeners, closure pieces, clip angles, continuous angles, hold-down angles, anchors, and fasteners, to provide a complete and stable joist-framing assembly.

3.6 FIELD QUALITY CONTROL

A. Testing: Owner will engage a qualified independent testing and inspecting agency to perform field tests and inspections and prepare test reports.

B. Field and shop welds will be subject to testing and inspecting.

C. Testing agency will report test results promptly and in writing to Contractor and Architect.

D. Remove and replace work where test results indicate that it does not comply with specified requirements.

E. Additional testing and inspecting, at Contractor's expense, will be performed to determine compliance of replaced or additional work with specified requirements.

3.7 REPAIRS AND PROTECTION

A. Galvanizing Repairs: Prepare and repair damaged galvanized coatings on fabricated and installed cold-formed steel framing with galvanized repair paint according to ASTM A 780 and manufacturer's written instructions.

B. Provide final protection and maintain conditions, in a manner acceptable to manufacturer and Installer, that ensure that cold-formed steel framing is without damage or deterioration at time of Substantial Completion.

END OF SECTION 054000

SECTION 054400 - COLD-FORMED METAL TRUSSES

PART 1 - GENERAL

1.1 RELATED DOCUMENTS

A. Drawings and general provisions of the Contract, including General and Supplementary Conditions and Division 01 Specification Sections, apply to this Section.

1.2 SUMMARY

A. Section Includes:

1. Cold-formed steel trusses for roofs.

2. Engineered design calculations and shop drawings signed and sealed by an engineer licensed in the State of Delaware.

B. Related Requirements:

1. Section 054000 "Cold-Formed Metal Framing" for cold-formed steel studs, joists, and rafters.

1.3 PREINSTALLATION MEETINGS

A. Preinstallation Conference: Conduct conference at Project site.

1.4 ACTION SUBMITTALS

A. Product Data: For each type of product.

B. Shop Drawings:

1. Include layout, spacings, sizes, thicknesses, and types of cold-formed steel trusses; fabrication; and fastening and anchorage details, including mechanical fasteners.
2. Indicate reinforcing channels, opening framing, supplemental framing, strapping, bracing, bridging, splices, accessories, connection details, and attachment to adjoining work.
3. Include structural analysis data signed and sealed by the qualified professional engineer licensed in the State of Delaware responsible for their preparation.

C. Delegated-Design Submittal: For cold-formed steel trusses. Provide Engineered design calculations and shop drawings signed and sealed by an engineer licensed in the State of Delaware.

1.5 INFORMATIONAL SUBMITTALS

A. Qualification Data: For testing agency.

B. Welding certificates.

C. Product Test Reports: For each listed product, for tests performed by manufacturer and witnessed by a qualified testing agency or a qualified testing agency.

1. Steel sheet.
2. Expansion anchors.
3. Power-actuated anchors.
4. Mechanical fasteners.
5. Miscellaneous structural clips and accessories.

D. Field quality-control reports.

1.6 QUALITY ASSURANCE

A. Testing Agency Qualifications: Qualified according to ASTM E 329 for testing indicated.

B. Product Tests: Mill certificates or data from a qualified testing agency, or in-house testing with calibrated test equipment, indicating steel sheet complies with requirements, including base-metal thickness, yield strength, tensile strength, total elongation, chemical requirements, and metallic-coating thickness.

C. Welding Qualifications: Qualify procedures and personnel according to the following:

1. AWS D1.1/D1.1M, "Structural Welding Code - Steel."
2. AWS D1.3/D1.3M, "Structural Welding Code - Sheet Steel."

D. Engineering Responsibility: Preparation of Shop Drawings, design calculations, and other structural data by a qualified professional engineer.

E. Professional Engineer Qualifications: A Professional Engineer who is legally qualified to practice in jurisdiction where project is located (State of Delaware) and who is experienced in providing engineering services of the kind indicated.

F. Comply with AISI's "North American Specification for the Design of Cold-Formed Steel Structural Members" and its "Standards for Cold-Formed Steel Framing – General Provisions", and "Truss Design" and "Header Design".

G. Preinstallation Conference: Conduct conference at Project site to comply with requirements of Division 1 Section "Project Meetings."

H. Product Tests: Mill certificates or data from a qualified independent testing agency indicating steel sheet complies with requirements, including base-metal thickness, yield strength, tensile strength, total elongation, chemical requirements, ductility, and metallic-coating thickness.

I. Fire-Test-Response Characteristics: Where indicated, provide cold-formed metal framing identical to that of assemblies tested for fire resistance per ASTM E 119 by a testing and inspecting agency acceptable to authorities having jursidiction.

1.7 DELIVERY, STORAGE, AND HANDLING

A. Protect cold-formed steel trusses from corrosion, deformation, and other damage during delivery, storage, and handling.

PART 2 - PRODUCTS

2.1 MANUFACTURERS

A. Manufacturers: Subject to compliance with requirements, available manufacturers offering products that may be incorporated into the Work include, but are not limited to, the following]:

1. All-Span Incorporated.
2. Aegis Metal Framing.
3. Genesis Worldwide Inc.
4. Marino/WARE.
5. Nuconsteel, A Nucor Company.
6. Steel Construction Systems.
7. TrusSteel; an ITW company.
8. USA Frametek.

2.2 PERFORMANCE REQUIREMENTS

A. Delegated Design: Engage a qualified professional engineer licensed in the State of Delaware to design cold-formed steel trusses.

B. Structural Performance: Provide cold-formed steel trusses capable of withstanding design loads within limits and under conditions indicated.

1. Design Loads: As indicated on drawings, Engineer to calculate code required drifting and sliding snow.
2. Deflection Limits: Design trusses to withstand design loads without deflections greater than the following:

   a. Roof Trusses: As indicated on drawings.

3. Design framing systems to provide for movement of framing members located outside the insulated building envelope without damage or overstressing, sheathing failure, connection failure, undue strain on fasteners and anchors, or other detrimental effects when subject to a maximum ambient temperature change of 120 deg F.

C. Cold-Formed Steel Framing Design Standards:

1. Lateral Design: Design according to AISI S213.
2. Roof Trusses: Design according to AISI S214.

D. Fire-Resistance Ratings: Comply with ASTM E 119; testing by a qualified testing agency. Identify products with appropriate markings of applicable testing agency.

1. Indicate design designations from UL's "Fire Resistance Directory" or from the listings of another qualified testing agency.

2.3 COLD-FORMED STEEL TRUSS MATERIALS

A. Recycled Content of Steel Products: Postconsumer recycled content plus one-half of preconsumer recycled content not less than 25 percent.

B. Steel Sheet: ASTM A 1003, structural grade, Type H, metallic coated, of grade and coating weight as follows:

1. Grade: ST33H or as required by structural performance.
2. Coating: G60.

2.4 ROOF TRUSSES

A. Roof Truss Members: Manufacturer's standard C-shaped steel sections.

1. Connecting Flange Width: 1-5/8 inches minimum at top and bottom chords connecting to sheathing or other directly fastened construction.
2. Minimum Base-Metal Thickness: 0.0329 inch.

2.5 ACCESSORIES

A. Fabricate steel-framing accessories from steel sheet, ASTM A 1003, structural grade, Type H, metallic coated, of same grade and coating weight used for truss members.

B. Provide accessories of manufacturer's standard thickness and configuration unless otherwise indicated.

2.6 ANCHORS, CLIPS, AND FASTENERS

A. Steel Shapes and Clips: ASTM A 36, zinc coated by hot-dip process according to ASTM A 123/A 123M.

B. Anchor Bolts: ASTM F 1554, Grade 36, threaded carbon-steel hex-headed bolts and carbon-steel nuts; and flat, hardened-steel washers; zinc coated by hot-dip process according to ASTM A 153.

C. Expansion Anchors: Fabricated from corrosion-resistant materials, with allowable load or strength design capacities calculated according to ICC-ES AC193 and Appendix D in ACI 318, greater than or equal to the design load, as determined by testing per ASTM E 488 conducted by a qualified testing agency.

D. Power-Actuated Fasteners: Fastener system of type suitable for application, fabricated from corrosion-resistant materials, with capability to sustain, without failure, allowable load capacities calculated according to ICC-ES AC70, greater than or equal to the design load, as determined by testing per ASTM E 1190 conducted by a qualified testing agency.

E. Mechanical Fasteners: ASTM C 1513, corrosion-resistant-coated, self-drilling, self-tapping steel drill screws.

1. Head Type: Low-profile head beneath sheathing; manufacturer's standard elsewhere.

F. Welding Electrodes: Comply with AWS standards.

2.7 MISCELLANEOUS MATERIALS

A. Galvanizing Repair Paint: SSPC-Paint 20 or MIL-P-21035B , VOC compliant.

B. Shims: Load bearing, of high-density multimonomer plastic, nonleaching; or of cold-formed steel of same grade and coating as framing members supported by shims.

2.8 FABRICATION

A. Fabricate cold-formed steel trusses and accessories plumb, square, and true to line, and with connections securely fastened, according to referenced AISI's specifications and standards, manufacturer's written instructions, and requirements in this Section.

1. Fabricate trusses using jigs or templates.
2. Cut truss members by sawing or shearing; do not torch cut.
3. Fasten cold-formed steel truss members by welding, screw fastening, clinch fastening, pneumatic pin fastening, or riveting as standard with fabricator.

a. Comply with AWS D1.3 requirements and procedures for welding, appearance and quality of welds, and methods used in correcting welding work.

4. Fasten other materials to cold-formed steel trusses by welding, bolting, pneumatic pin fastening, or screw fastening, according to Shop Drawings.

B. Reinforce, stiffen, and brace trusses to withstand handling, delivery, and erection stresses. Lift fabricated trusses to prevent damage or permanent distortion.

C. Fabrication Tolerances: Fabricate assemblies level, plumb, and true to line to a maximum allowable tolerance variation of 1/8 inch in 10 feet and as follows:

1. Spacing: Space individual framing members no more than plus or minus 1/8 inch from plan location. Cumulative error shall not exceed minimum fastening requirements of sheathing or other finishing materials.

2. Squareness: Fabricate each cold-formed metal framing assembly to a maximum out-of-square tolerance of 1/8 inch.

PART 3 - EXECUTION

3.1 EXAMINATION

A. Examine supporting substrates and abutting cold-formed steel trusses for compliance with requirements for installation tolerances and other conditions affecting performance of the Work.

B. Proceed with installation only after unsatisfactory conditions have been corrected.

3.2 PREPARATION

A. Before sprayed fire-resistive materials are applied, attach continuous angles, supplementary framing, or tracks to structural members indicated to receive sprayed fire-resistive materials.

B. After applying sprayed fire-resistive materials, remove only as much of these materials as needed to complete installation of cold-formed steel trusses without reducing thickness of fire-resistive materials below that is required to obtain fire-resistance rating indicated. Protect remaining fire-resistive materials from damage.

3.3 INSTALLATION

A. Install, bridge, and brace cold-formed steel trusses according to AISI S200, AISI S214, AISI's "Code of Standard Practice for Cold-Formed Steel Structural Framing," and manufacturer's written instructions unless more stringent requirements are indicated.

B. Install cold-formed steel trusses and accessories plumb, square, and true to line, and with connections securely fastened.

1. Fasten cold-formed steel trusses by welding or mechanical fasteners.

   a. Comply with AWS D1.3/D1.3M requirements and procedures for welding, appearance and quality of welds, and methods used in correcting welding work.
   b. Locate mechanical fasteners and install according to Shop Drawings; comply with requirements for spacing, edge distances, and screw penetration.

C. Install temporary bracing and supports. Maintain braces and supports in place, undisturbed, until entire integrated supporting structure has been completed and permanent connections to framing are secured.

D. Truss Spacing: As indicated.

E. Do not alter, cut, or remove framing members or connections of trusses.

F. Erect trusses with plane of truss webs plumb and parallel to each other, align, and accurately position at spacings indicated.

G. Erect trusses without damaging framing members or connections.

H. Coordinate with wall framing to align webs of bottom chords and load-bearing studs or continuously reinforce track to transfer loads to structure. Anchor trusses securely at all bearing points.

I. Install continuous bridging and permanently brace trusses as indicated on Shop Drawings and designed according to CFSEI's TechNote 551e, "Design Guide: Permanent Bracing of Cold-Formed Steel Trusses.".

J. Erection Tolerances: Install cold-formed steel framing level, plumb, and true to line to a maximum allowable tolerance variation of 1/8 inch in 10 feet and as follows:

1. Space individual trusses no more than plus or minus 1/8 inch from plan location. Cumulative error shall not exceed minimum fastening requirements of sheathing or other finishing materials.

3.4 FIELD QUALITY CONTROL

A. Testing Agency: Owner will engage a qualified testing agency to perform tests and inspections.

B. Field and shop welds will be subject to testing and inspecting.

C. Prepare test and inspection reports.

3.5 REPAIRS AND PROTECTION

A. Galvanizing Repairs: Prepare and repair damaged galvanized coatings on fabricated and installed cold-formed metal framing with galvanized repair paint according to ASTM A 780 and manufacturer's written instructions.

B. Provide final protection and maintain conditions, in a manner acceptable to manufacturer and Installer, that ensure that cold-formed metal trusses are without damage or deterioration at time of Substantial Completion.

END OF SECTION 054400

SECTION 055000 - METAL FABRICATIONS

PART 1 - GENERAL

1.1 RELATED DOCUMENTS

A. Drawings and general provisions of the Contract, including General and Supplementary Conditions and Division 01 Specification Sections, apply to this Section.

1.2 SUMMARY

A. Section Includes:

1. Steel framing and supports for mechanical and electrical equipment.
2. Steel framing and supports for applications where framing and supports are not specified in other Sections.
3. Metal ladders.
4. Loose bearing and leveling plates for applications where they are not specified in other Sections.

B. Products furnished, but not installed, under this Section include the following:

1. Loose steel lintels.
2. Anchor bolts, steel pipe sleeves, slotted-channel inserts, and wedge-type inserts indicated to be cast into concrete or built into unit masonry.

C. Related Requirements:

1. Section 033000 "Cast-in-Place Concrete" for installing anchor bolts, steel pipe sleeves, slotted-channel inserts, wedge-type inserts, and other items cast into concrete.
2. Section 042000 "Unit Masonry" for installing loose lintels, anchor bolts, and other items built into unit masonry.
3. Section 051200 "Structural Steel Framing."

1.3 COORDINATION

A. Coordinate selection of shop primers with topcoats to be applied over them. Comply with paint and coating manufacturers' written recommendations to ensure that shop primers and topcoats are compatible with one another.

B. Coordinate installation of metal fabrications that are anchored to or that receive other work. Furnish setting drawings, templates, and directions for installing anchorages, including sleeves, concrete inserts, anchor bolts, and items with integral anchors, that are to be embedded in concrete or masonry. Deliver such items to Project site in time for installation.

1.4 ACTION SUBMITTALS

A. Product Data: For the following:

1. Nonslip aggregates and nonslip-aggregate surface finishes.

2. Prefabricated building columns.
3. Metal nosings and treads.
4. Paint products.
5. Grout.

B. Shop Drawings: Show fabrication and installation details. Include plans, elevations, sections, and details of metal fabrications and their connections. Show anchorage and accessory items.

1.5 INFORMATIONAL SUBMITTALS

A. Welding certificates.

B. Paint Compatibility Certificates: From manufacturers of topcoats applied over shop primers, certifying that shop primers are compatible with topcoats.

C. Research/Evaluation Reports: For post-installed anchors, from ICC-ES.

1.6 QUALITY ASSURANCE

A. Welding Qualifications: Qualify procedures and personnel according to AWS D1.1/D1.1M, "Structural Welding Code - Steel."

B. Welding Qualifications: Qualify procedures and personnel according to the following:

1. AWS D1.1/D1.1M, "Structural Welding Code - Steel."
2. AWS D1.2/D1.2M, "Structural Welding Code - Aluminum."
3. AWS D1.6/D1.6M, "Structural Welding Code - Stainless Steel."

1.7 FIELD CONDITIONS

A. Field Measurements: Verify actual locations of walls and other construction contiguous with metal fabrications by field measurements before fabrication.

PART 2 - PRODUCTS

2.1 PERFORMANCE REQUIREMENTS

A. Thermal Movements: Allow for thermal movements from ambient and surface temperature changes acting on exterior metal fabrications by preventing buckling, opening of joints, overstressing of components, failure of connections, and other detrimental effects.

1. Temperature Change: 120 deg F (67 deg C), ambient; 180 deg F (100 deg C), material surfaces.

2.2 METALS

A. Metal Surfaces, General: Provide materials with smooth, flat surfaces unless otherwise indicated. For metal fabrications exposed to view in the completed Work, provide materials without seam marks, roller marks, rolled trade names, or blemishes.

B. Steel Plates, Shapes, and Bars: ASTM A 36/A 36M.

C. Stainless-Steel Sheet, Strip, and Plate: ASTM A 240/A 240M or ASTM A 666, Type 304.

D. Stainless-Steel Bars and Shapes: ASTM A 276, Type 304.

E. Rolled-Steel Floor Plate: ASTM A 786/A 786M, rolled from plate complying with ASTM A 36/A 36M or ASTM A 283/A 283M, Grade C or D.

F. Rolled-Stainless-Steel Floor Plate: ASTM A 793.

G. Steel Tubing: ASTM A 500/A 500M, cold-formed steel tubing.

H. Steel Pipe: ASTM A 53/A 53M, Standard Weight (Schedule 40) unless otherwise indicated.

I. Zinc-Coated Steel Wire Rope: ASTM A 741.

1. Wire-Rope Fittings: Hot-dip galvanized-steel connectors with capability to sustain, without failure, a load equal to minimum breaking strength of wire rope with which they are used.

J. Slotted Channel Framing: Cold-formed metal box channels (struts) complying with MFMA-4.

1. Size of Channels: 1-5/8 by 1-5/8 inches (41 by 41 mm).
2. Material: Galvanized steel, ASTM A 653/A 653M,, with G90 (Z275) coating; 0.064-inch (1.6-mm) nominal thickness minimum.

K. Cast Iron: Either gray iron, ASTM A 48/A 48M, or malleable iron, ASTM A 47/A 47M, unless otherwise indicated.

L. Aluminum Plate and Sheet: ASTM B 209 (ASTM B 209M), Alloy 6061-T6.

M. Aluminum Extrusions: ASTM B 221 (ASTM B 221M), Alloy 6063-T6.

N. Aluminum-Alloy Rolled Tread Plate: ASTM B 632/B 632M, Alloy 6061-T6.

O. Aluminum Castings: ASTM B 26/B 26M, Alloy 443.0-F.

2.3 FASTENERS

A. General: Unless otherwise indicated, provide Type 304 stainless-steel fasteners for exterior use and zinc-plated fasteners with coating complying with ASTM B 633 or ASTM F 1941 (ASTM F 1941M), Class Fe/Zn 5, at exterior walls. Select fasteners for type, grade, and class required.

1. Provide stainless-steel fasteners for fastening aluminum.
2. Provide stainless-steel fasteners for fastening stainless steel.

B. Steel Bolts and Nuts: Regular hexagon-head bolts, ASTM A 307, Grade A (ASTM F 568M, Property Class 4.6); with hex nuts, ASTM A 563 (ASTM A 563M); and, where indicated, flat washers.

C. Steel Bolts and Nuts: Regular hexagon-head bolts, ASTM A 325, Type 3 (ASTM A 325M, Type 3); with hex nuts, ASTM A 563, Grade C3 (ASTM A 563M, Class 8S3); and, where indicated, flat washers.

D. Stainless-Steel Bolts and Nuts: Regular hexagon-head annealed stainless-steel bolts, ASTM F 593 (ASTM F 738M); with hex nuts, ASTM F 594 (ASTM F 836M); and, where indicated, flat washers; Alloy Group 1 (A1).

E. Anchor Bolts: ASTM F 1554, Grade 36, of dimensions indicated; with nuts, ASTM A 563 (ASTM A 563M); and, where indicated, flat washers.

1. Hot-dip galvanize or provide mechanically deposited, zinc coating where item being fastened is indicated to be galvanized.

F. Anchors, General: Anchors capable of sustaining, without failure, a load equal to six times the load imposed when installed in unit masonry and four times the load imposed when installed in concrete, as determined by testing according to ASTM E 488/E 488M, conducted by a qualified independent testing agency.

G. Cast-in-Place Anchors in Concrete: Either threaded type or wedge type unless otherwise indicated; galvanized ferrous castings, either ASTM A 47/A 47M malleable iron or ASTM A 27/A 27M cast steel. Provide bolts, washers, and shims as needed, all hot-dip galvanized per ASTM F 2329.

H. Post-Installed Anchors: Chemical anchors.

1. Material for Interior Locations: Carbon-steel components zinc plated to comply with ASTM B 633 or ASTM F 1941 (ASTM F 1941M), Class Fe/Zn 5, unless otherwise indicated.
2. Material for Exterior Locations and Where Stainless Steel Is Indicated: Alloy Group 1 (A1) stainless-steel bolts, ASTM F 593 (ASTM F 738M), and nuts, ASTM F 594 (ASTM F 836M).

I. Slotted-Channel Inserts: Cold-formed, hot-dip galvanized-steel box channels (struts) complying with MFMA-4, 1-5/8 by 7/8 inches (41 by 22 mm) by length indicated with anchor straps or studs not less than 3 inches (75 mm) long at not more than 8 inches (200 mm) o.c. Provide with temporary filler and tee-head bolts, complete with washers and nuts, all zinc-plated to comply with ASTM B 633, Class Fe/Zn 5, as needed for fastening to inserts.

J. Universal Shop Primer: Fast-curing, lead- and chromate-free, universal modified-alkyd primer complying with MPI#79 and compatible with topcoat.

1. Use primer containing pigments that make it easily distinguishable from zinc-rich primer.

K. Epoxy Zinc-Rich Primer: Complying with MPI#20 and compatible with topcoat.

L. Shop Primer for Galvanized Steel: Primer formulated for exterior use over zinc-coated metal and compatible with finish paint systems indicated.

M. Galvanizing Repair Paint: High-zinc-dust-content paint complying with SSPC-Paint 20 and compatible with paints specified to be used over it.

N. Bituminous Paint: Cold-applied asphalt emulsion complying with ASTM D 1187/D 1187M.

O. Nonshrink, Nonmetallic Grout: Factory-packaged, nonstaining, noncorrosive, nongaseous grout complying with ASTM C 1107/C 1107M. Provide grout specifically recommended by manufacturer for interior and exterior applications.

P. Concrete: Comply with requirements in Section 033000 "Cast-in-Place Concrete" for normal-weight, air-entrained, concrete with a minimum 28-day compressive strength of 3000 psi (20 MPa).

2.4 FABRICATION, GENERAL

A. Shop Assembly: Preassemble items in the shop to greatest extent possible. Disassemble units only as necessary for shipping and handling limitations. Use connections that maintain structural value of joined pieces. Clearly mark units for reassembly and coordinated installation.

B. Cut, drill, and punch metals cleanly and accurately. Remove burrs and ease edges to a radius of approximately 1/32 inch (1 mm) unless otherwise indicated. Remove sharp or rough areas on exposed surfaces.

C. Form bent-metal corners to smallest radius possible without causing grain separation or otherwise impairing work.

D. Form exposed work with accurate angles and surfaces and straight edges.

E. Weld corners and seams continuously to comply with the following:

1. Use materials and methods that minimize distortion and develop strength and corrosion resistance of base metals.
2. Obtain fusion without undercut or overlap.
3. Remove welding flux immediately.
4. At exposed connections, finish exposed welds and surfaces smooth and blended so no roughness shows after finishing and contour of welded surface matches that of adjacent surface.

F. Form exposed connections with hairline joints, flush and smooth, using concealed fasteners or welds where possible. Where exposed fasteners are required, use Phillips flat-head (countersunk) fasteners unless otherwise indicated. Locate joints where least conspicuous.

G. Fabricate seams and other connections that are exposed to weather in a manner to exclude water. Provide weep holes where water may accumulate.

H. Cut, reinforce, drill, and tap metal fabrications as indicated to receive finish hardware, screws, and similar items.

I. Provide for anchorage of type indicated; coordinate with supporting structure. Space anchoring devices to secure metal fabrications rigidly in place and to support indicated loads.

J. Where units are indicated to be cast into concrete or built into masonry, equip with integrally welded steel strap anchors, 1/8 by 1-1/2 inches (3.2 by 38 mm), with a minimum 6-inch (150-mm) embedment and 2-inch (50-mm) hook, not less than 8 inches (200 mm) from ends and corners of units and 24 inches (600 mm) o.c., unless otherwise indicated.

2.5 MISCELLANEOUS FRAMING AND SUPPORTS

A. General: Provide steel framing and supports not specified in other Sections as needed to complete the Work.

B. Fabricate units from steel shapes, plates, and bars of welded construction unless otherwise indicated. Fabricate to sizes, shapes, and profiles indicated and as necessary to receive adjacent construction.

1. Fabricate units from slotted channel framing where indicated.
2. Furnish inserts for units installed after concrete is placed.

C. Galvanize miscellaneous framing and supports where indicated.

D. Prime miscellaneous framing and supports with zinc-rich primer where indicated.

2.6 METAL LADDERS

A. General:

1. Comply with ANSI A14.3.

B. Steel Ladders:

1. Space siderails 18 inches (457 mm) apart unless otherwise indicated.
2. Siderails: Continuous, 3/8-by-2-1/2-inch (9.5-by-64-mm) steel flat bars, with eased edges.
3. Rungs: 3/4-inch- (19-mm-) diameter steel bars.
4. Fit rungs in centerline of siderails; plug-weld and grind smooth on outer rail faces.
5. Provide nonslip surfaces on top of each rung, either by coating rung with aluminum-oxide granules set in epoxy-resin adhesive or by using a type of manufactured rung filled with aluminum-oxide grout, or by coating with abrasive material metallically bonded to rung.

   a. Products: Subject to compliance with requirements, available products that may be incorporated into the Work include, but are not limited to, the following:

      1) Harsco Industrial IKG, a division of Harsco Corporation; Mebac.
      2) SlipNOT Metal Safety Flooring, a division of W. S. Molnar Company; SlipNOT.

6. Provide platforms as indicated fabricated from welded or pressure-locked steel bar grating, supported by steel angles. Limit openings in gratings to no more than 1/2 inch (12 mm) in least dimension.
7. Support each ladder at top and bottom and not more than 48 inches (1200 mm) o.c. with welded or bolted steel brackets.
8. Galvanize ladders, including brackets.

2.7 LOOSE BEARING AND LEVELING PLATES

A. Provide loose bearing and leveling plates for steel items bearing on masonry or concrete construction. Drill plates to receive anchor bolts and for grouting.

B. Galvanize and prime plates with zinc-rich primer.

2.8 LOOSE STEEL LINTELS

A. Fabricate loose steel lintels from steel angles and shapes of size indicated for openings and recesses in masonry walls and partitions at locations indicated. Fabricate in single lengths for each opening unless otherwise indicated. Weld adjoining members together to form a single unit where indicated.

B. Size loose lintels to provide bearing length at each side of openings equal to 1/12 of clear span, but not less than 8 inches (200 mm) unless otherwise indicated.

C. Galvanize and prime loose steel lintels located in exterior walls.

D. Prime loose steel lintels located in exterior walls with primer specified in Section 099600 "High-Performance Coatings."

2.9 STEEL WELD PLATES AND ANGLES

A. Provide steel weld plates and angles not specified in other Sections, for items supported from concrete construction as needed to complete the Work. Provide each unit with no fewer than two integrally welded steel strap anchors for embedding in concrete.

2.10 FINISHES, GENERAL

A. Finish metal fabrications after assembly.

B. Finish exposed surfaces to remove tool and die marks and stretch lines, and to blend into surrounding surface.

2.11 STEEL AND IRON FINISHES

A. Galvanizing: Hot-dip galvanize items as indicated to comply with ASTM A 153/A 153M for steel and iron hardware and with ASTM A 123/A 123M for other steel and iron products.

1. Do not quench or apply post galvanizing treatments that might interfere with paint adhesion.

B. Preparation for Shop Priming Galvanized Items: After galvanizing, thoroughly clean railings of grease, dirt, oil, flux, and other foreign matter, and treat with metallic phosphate process.

C. Shop prime iron and steel items not indicated to be galvanized unless they are to be embedded in concrete, sprayed-on fireproofing, or masonry, or unless otherwise indicated.

1. Shop prime with universal shop primer unless zinc-rich primer is indicated.

D. Preparation for Shop Priming: Prepare surfaces to comply with requirements indicated below:

1. Exterior Items: SSPC-SP 6/NACE No. 3, "Commercial Blast Cleaning."
2. Items Indicated to Receive Zinc-Rich Primer: SSPC-SP 6/NACE No. 3, "Commercial Blast Cleaning."
3. Items Indicated to Receive Primers Specified in Section 099600 "High-Performance Coatings": SSPC-SP 6/NACE No. 3, "Commercial Blast Cleaning."
4. Other Items: SSPC-SP 3, "Power Tool Cleaning."

E. Shop Priming: Apply shop primer to comply with SSPC-PA 1, "Paint Application Specification No. 1: Shop, Field, and Maintenance Painting of Steel," for shop painting.

1. Stripe paint corners, crevices, bolts, welds, and sharp edges.

2.12 ALUMINUM FINISHES

A. As-Fabricated Finish: AA-M12.

B. Clear Anodic Finish: AAMA 611, Class I, AA-M12C22A41.

PART 3 - EXECUTION

3.1 INSTALLATION, GENERAL

A. Cutting, Fitting, and Placement: Perform cutting, drilling, and fitting required for installing metal fabrications. Set metal fabrications accurately in location, alignment, and elevation; with edges and surfaces level, plumb, true, and free of rack; and measured from established lines and levels.

B. Fit exposed connections accurately together to form hairline joints. Weld connections that are not to be left as exposed joints but cannot be shop welded because of shipping size limitations. Do not weld, cut, or abrade surfaces of exterior units that have been hot-dip galvanized after fabrication and are for bolted or screwed field connections.

C. Field Welding: Comply with the following requirements:

1. Use materials and methods that minimize distortion and develop strength and corrosion resistance of base metals.
2. Obtain fusion without undercut or overlap.
3. Remove welding flux immediately.
4. At exposed connections, finish exposed welds and surfaces smooth and blended so no roughness shows after finishing and contour of welded surface matches that of adjacent surface.

D. Fastening to In-Place Construction: Provide anchorage devices and fasteners where metal fabrications are required to be fastened to in-place construction. Provide threaded fasteners for use with concrete and masonry inserts, toggle bolts, through bolts, lag screws, wood screws, and other connectors.

E. Provide temporary bracing or anchors in formwork for items that are to be built into concrete, masonry, or similar construction.

F. Corrosion Protection: Coat concealed surfaces of aluminum that come into contact with grout, concrete, masonry, wood, or dissimilar metals with the following:

1. Cast Aluminum: Heavy coat of bituminous paint.
2. Extruded Aluminum: Two coats of clear lacquer.

3.2 INSTALLING MISCELLANEOUS FRAMING AND SUPPORTS

A. General: Install framing and supports to comply with requirements of items being supported, including manufacturers' written instructions and requirements indicated on Shop Drawings.

3.3 INSTALLING METAL BOLLARDS

A. Fill metal-capped bollards solidly with concrete and allow concrete to cure seven days before installing.

1. Do not fill removable bollards with concrete.

B. Anchor bollards to existing construction with expansion anchors. Provide four 3/4-inch (19-mm) bolts at each bollard unless otherwise indicated.

1. Embed anchor bolts at least 4 inches (100 mm) in concrete.

C. Anchor bollards in concrete in formed or core-drilled holes not less than 8 inches (200 mm) deep and 3/4 inch (19 mm) larger than OD of bollard. Fill annular space around bollard solidly with nonshrink grout; mixed and placed to comply with grout manufacturer's written instructions. Slope grout up approximately 1/8 inch (3 mm) toward bollard.

D. Anchor internal sleeves for removable bollards in concrete by inserting in pipe sleeves preset into concrete. Fill annular space around internal sleeves solidly with nonshrink grout; mixed and placed to comply with grout manufacturer's written instructions. Slope grout up approximately 1/8 inch (3 mm) toward internal sleeve.

E. Anchor internal sleeves for removable bollards in place with concrete footings. Center and align sleeves in holes 3 inches (75 mm) above bottom of excavation. Place concrete and vibrate or tamp for consolidation. Support and brace sleeves in position until concrete has cured.

F. Place removable bollards over internal sleeves and secure with 3/4-inch (19-mm) machine bolts and nuts. After tightening nuts, drill holes in bolts for inserting padlocks. Owner furnishes padlocks.

G. Fill bollards solidly with concrete and install cap.

1. Do not fill removable bollards with concrete.

3.4 INSTALLING BEARING AND LEVELING PLATES

A. Clean concrete and masonry bearing surfaces of bond-reducing materials, and roughen to improve bond to surfaces. Clean bottom surface of plates.

B. Set bearing and leveling plates on wedges, shims, or leveling nuts. After bearing members have been positioned and plumbed, tighten anchor bolts. Do not remove wedges or shims but, if protruding, cut off flush with edge of bearing plate before packing with nonshrink grout. Pack grout solidly between bearing surfaces and plates to ensure that no voids remain.

3.5 ADJUSTING AND CLEANING

A. Touchup Painting: Immediately after erection, clean field welds, bolted connections, and abraded areas. Paint uncoated and abraded areas with the same material as used for shop painting to comply with SSPC-PA 1 for touching up shop-painted surfaces.

1. Apply by brush or spray to provide a minimum 2.0-mil (0.05-mm) dry film thickness.

B. Galvanized Surfaces: Clean field welds, bolted connections, and abraded areas and repair galvanizing to comply with ASTM A 780/A 780M.

END OF SECTION 055000

SECTION 055100 - METAL STAIRS

PART 1 - GENERAL

1.1 RELATED DOCUMENTS

A. Drawings and general provisions of the Contract, including General and Supplementary Conditions and Division 01 Specification Sections, apply to this Section.

1.2 SUMMARY

A. This Section includes the following:

1. Preassembled steel stairs with concrete-filled treads.

1.3 PERFORMANCE REQUIREMENTS

A. Structural Performance of Stairs: Provide metal stairs capable of withstanding the effects of gravity loads and the following loads and stresses within limits and under conditions indicated:

1. Uniform Load: 100 lbf/sq. ft. .
2. Concentrated Load: 300 lbf applied on an area of 4 sq. in. .
3. Uniform and concentrated loads need not be assumed to act concurrently.
4. Stair Framing: Capable of withstanding stresses resulting from railing loads in addition to loads specified above.
5. Limit deflection of treads, platforms, and framing members to L/360 or 1/4 inch , whichever is less.

B. Seismic Performance: Provide metal stairs capable of withstanding the effects of earthquake motions determined according to ASCE 7, "Minimum Design Loads for Buildings and Other Structures": Section 9, "Earthquake Loads."

1.4 SUBMITTALS

A. Shop Drawings: Include plans, elevations, sections, details, and attachments to other work.

1. Provide templates for anchors and bolts specified for installation under other Sections.
2. For installed products indicated to comply with design loads, include structural analysis data signed and sealed by the qualified professional engineer responsible for their preparation.

1.5 QUALITY ASSURANCE

A. Installer Qualifications: Fabricator of products.

B. NAAMM Stair Standard: Comply with "Recommended Voluntary Minimum Standards for Fixed Metal Stairs" in NAAMM AMP 510, "Metal Stairs Manual," for class of stair designated, unless more stringent requirements are indicated.

1. Preassembled Stairs: Commercial class.
2. Industrial-Type Stairs: Industrial class.

C. Welding: Qualify procedures and personnel according to the following:

1. AWS D1.1, "Structural Welding Code--Steel."

2. AWS D1.3, "Structural Welding Code--Sheet Steel."

1.6 COORDINATION

A. Coordinate installation of anchorages for metal stairs. Furnish setting drawings, templates, and directions for installing anchorages, including sleeves, concrete inserts, anchor bolts, and items with integral anchors, that are to be embedded in concrete or masonry. Deliver such items to Project site in time for installation.

B. Coordinate locations of hanger rods and struts with other work so that they will not encroach on required stair width and will be within the fire-resistance-rated stair enclosure.

PART 2 - PRODUCTS

2.1 MANUFACTURERS

A. In other Part 2 articles where titles below introduce lists, the following requirements apply to product selection:

1. Products: Subject to compliance with requirements, provide one of the products specified.
2. Manufacturers: Subject to compliance with requirements, provide products by one of the manufacturers specified.

2.2 METALS, GENERAL

A. Metal Surfaces, General: Provide materials with smooth, flat surfaces, unless otherwise indicated. For components exposed to view in the completed Work, provide materials without seam marks, roller marks, rolled trade names, or blemishes.

2.3 FERROUS METALS

A. Steel Plates, Shapes, and Bars: ASTM A 36/A 36M.

B. Steel Tubing: ASTM A 500 (cold formed).

C. Rolled-Steel Floor Plate: ASTM A 786/A 786M, rolled from plate complying with ASTM A 36/A 36M or ASTM A 283/A 283M, Grade C or D.

D. Iron Castings: Either gray or malleable iron, unless otherwise indicated.

1. Malleable Iron: ASTM A 47/A 47M.

E. Galvanized Steel Sheet: ASTM A 653/A 653M, G90 coating, structural steel, Grade 33 , unless another grade is required by design loads.

2.4 FASTENERS

A. General: Provide zinc-plated fasteners with coating complying with ASTM B 633, Class Fe/Zn 25 for exterior use, and Class Fe/Zn 5 where built into exterior walls. Select fasteners for type, grade, and class required.

B. Bolts and Nuts: Regular hexagon-head bolts, ASTM A 307, Grade A ; with hex nuts, ASTM A 563 ; and, where indicated, flat washers.

C. Anchor Bolts: ASTM F 1554, Grade 36.

1. Provide hot-dip or mechanically deposited, zinc-coated anchor bolts for exterior stairs.

D. Machine Screws: ASME B18.6.3 .

E. Plain Washers: Round, ASME B18.22.1 .

F. Lock Washers: Helical, spring type, ASME B18.21.1 .

2.5 MISCELLANEOUS MATERIALS

A. Welding Rods and Bare Electrodes: Select according to AWS specifications for metal alloy welded.

B. Galvanizing Repair Paint: High-zinc-dust-content paint for regalvanizing welds in steel, complying with SSPC-Paint 20.

C. Bituminous Paint: Cold-applied asphalt emulsion complying with ASTM D 1187.

D. Concrete Materials and Properties: Comply with requirements in Division 03 Section "Miscellaneous Cast-in-Place Concrete" for normal-weight, air-entrained, ready-mix concrete with a minimum 28-day compressive strength of 3000 psi , unless otherwise indicated.

2.6 FABRICATION, GENERAL

A. Provide complete stair assemblies, including metal framing, hangers, struts,clips, brackets, bearing plates, and other components necessary to support and anchor stairs and platforms on supporting structure.

1. Join components by welding, unless otherwise indicated.
2. Use connections that maintain structural value of joined pieces.
3. Fabricate treads and platforms of exterior stairs so finished walking surfaces slope to drain.

B. Preassembled Stairs: Assemble stairs in shop to greatest extent possible. Disassemble units only as necessary for shipping and handling limitations. Clearly mark units for reassembly and coordinated installation.

C. Cut, drill, and punch metals cleanly and accurately. Remove burrs and ease edges to a radius of approximately 1/32 inch , unless otherwise indicated. Remove sharp or rough areas on exposed surfaces.

D. Form bent-metal corners to smallest radius possible without causing grain separation or otherwise impairing work.

E. Form exposed work true to line and level with accurate angles and surfaces and straight edges.

F. Weld connections to comply with the following:

1. Use materials and methods that minimize distortion and develop strength and corrosion resistance of base metals.
2. Obtain fusion without undercut or overlap.
3. Remove welding flux immediately.
4. Weld exposed corners and seams continuously, unless otherwise indicated.
5. At exposed connections, finish exposed welds and surfaces smooth and blended so no roughness shows after finishing and contour of welded surface matches that of adjacent surface.

G. Form exposed connections with hairline joints, flush and smooth, using concealed fasteners where possible. Where exposed fasteners are required, use Phillips flat-head (countersunk) screws or bolts unless otherwise indicated. Locate joints where least conspicuous.

H. Fabricate joints that will be exposed to weather in a manner to exclude water. Provide weep holes where water may accumulate.

2.7 STEEL-FRAMED STAIRS

A. Manufacturers:

1. Alfab, Inc.
2. American Stair, Inc.
3. Sharon Companies Ltd. (The).

B. Stair Framing:

1. Fabricate stringers of steel channels or tubes.

a. Provide closures for exposed ends of channel or tube stringers.

2. Construct platforms of steel plate or channel headers and miscellaneous framing members as needed to comply with performance requirements.
3. Weld stringers to headers; weld framing members to stringers and headers.
4. Where stairs are enclosed by gypsum board assemblies, provide hanger rods or struts to support landings from floor construction above or below. Locate hanger rods and struts where they will not encroach on required stair width and will be within the fire-resistance-rated stair enclosure.
5. Where masonry walls support metal stairs, provide temporary supporting struts designed for erecting steel stair components before installing masonry.

C. Metal-Pan Stairs: Form risers, subtread pans, and subplatforms to configurations shown from steel sheet of thickness needed to comply with performance requirements but not less than 0.0677 inch.

1. Steel Sheet: Galvanized steel sheet.
2. Directly weld metal pans to stringers; locate welds on top of subtreads where they will be concealed by concrete fill. Do not weld risers to stringers.
3. Shape metal pans to include nosing integral with riser.
4. Attach abrasive nosings to risers.
5. At Contractor's option, provide stair assemblies with metal-pan subtreads filled with reinforced concrete during fabrication.
6. Provide subplatforms of configuration indicated or, if not indicated, the same as subtreads. Weld subplatforms to platform framing.

a. Smooth Soffit Construction: Construct subplatforms with smooth soffits.

2.8 FINISHES

A. Comply with NAAMM's "Metal Finishes Manual for Architectural and Metal Products" for recommendations for applying and designating finishes.

B. Finish metal stairs after assembly.

C. Galvanizing: Hot-dip galvanize items as indicated to comply with applicable standard listed below:

1. ASTM A 123/A 123M, for galvanizing steel and iron products.

2. ASTM A 153/A 153M, for galvanizing steel and iron hardware.

PART 3 - EXECUTION

3.1 INSTALLATION, GENERAL

A. Fastening to In-Place Construction: Provide anchorage devices and fasteners where necessary for securing metal stairs to in-place construction. Include threaded fasteners for concrete and masonry inserts, through-bolts, lag bolts, and other connectors.

B. Cutting, Fitting, and Placement: Perform cutting, drilling, and fitting required for installing metal stairs. Set units accurately in location, alignment, and elevation, measured from established lines and levels and free of rack.

C. Install metal stairs by welding stair framing to steel structure or to weld plates cast into concrete, unless otherwise indicated.

D. Provide temporary bracing or anchors in formwork for items that are to be built into concrete, masonry, or similar construction.

E. Fit exposed connections accurately together to form hairline joints. Weld connections that are not to be left as exposed joints but cannot be shop welded because of shipping size limitations. Do not weld, cut, or abrade surfaces of exterior units that have been hot-dip galvanized after fabrication and are for bolted or screwed field connections.

F. Field Welding: Comply with the following requirements:

1. Use materials and methods that minimize distortion and develop strength and corrosion resistance of base metals.
2. Obtain fusion without undercut or overlap.
3. Remove welding flux immediately.
4. At exposed connections, finish exposed welds and surfaces smooth and blended so no roughness shows after finishing and contour of welded surface matches that of adjacent surface.

G. Place and finish concrete fill for treads and platforms to comply with Division 03 Section "Cast-in-Place Concrete."

1. Install abrasive nosings with anchors fully embedded in concrete. Center nosings on tread width.

3.2 ADJUSTING AND CLEANING

A. Galvanized Surfaces: Clean field welds, bolted connections, and abraded areas and repair galvanizing to comply with ASTM A 780.

END OF SECTION 055100

SECTION 055213 - PIPE AND TUBE RAILINGS

PART 1 - GENERAL

1.1 RELATED DOCUMENTS

A. Drawings and general provisions of the Contract, including General and Supplementary Conditions and Division 01 Specification Sections, apply to this Section.

1.2 SUMMARY

A. Section Includes:

1. Manufactured aluminum pipe and tube railings.

B. Related Sections:

1. Division 06 Section "Rough Carpentry" for wood blocking for anchoring railings.
2. Division 09 Section "Non-Structural Metal Framing" for metal backing for anchoring railings.

1.3 PERFORMANCE REQUIREMENTS

A. Delegated Design: Design railings, including comprehensive engineering analysis by a qualified professional engineer, using performance requirements and design criteria indicated.

B. General: In engineering railings to withstand structural loads indicated, determine allowable design working stresses of railing materials based on the following:

1. Aluminum: The lesser of minimum yield strength divided by 1.65 or minimum ultimate tensile strength divided by 1.95.

C. Structural Performance: Railings shall withstand the effects of gravity loads and the following loads and stresses within limits and under conditions indicated:

1. Handrails and Top Rails of Guards:

a. Uniform load of 50 lbf/ ft. (0.73 kN/m) applied in any direction.
b. Concentrated load of 200 lbf (0.89 kN) applied in any direction.
c. Uniform and concentrated loads need not be assumed to act concurrently.

2. Infill of Guards:

a. Concentrated load of 50 lbf (0.22 kN) applied horizontally on an area of 1 sq. ft. (0.093 sq. m).
b. Infill load and other loads need not be assumed to act concurrently.

D. Thermal Movements: Allow for thermal movements from ambient and surface temperature changes acting on exterior metal fabrications by preventing buckling, opening of joints, overstressing of components, failure of connections, and other detrimental effects.

1. Temperature Change: 120 deg F (67 deg C), ambient; 180 deg F (100 deg C), material surfaces.

E. Control of Corrosion: Prevent galvanic action and other forms of corrosion by insulating metals and other materials from direct contact with incompatible materials.

1.4 SUBMITTALS

A. Product Data: For the following:

1. Railing brackets.
2. Grout, anchoring cement, and paint products.

B. Shop Drawings: Include plans, elevations, sections, details, and attachments to other work.

C. Samples for Verification: For each type of exposed finish required.

1. Fittings and brackets.

D. Delegated-Design Submittal: For installed products indicated to comply with performance requirements and design criteria, including analysis data signed and sealed by the qualified professional engineer responsible for their preparation.

E. Welding certificates.

1.5 QUALITY ASSURANCE

A. Source Limitations: Obtain each type of railing from single source from single manufacturer.

B. Welding Qualifications: Qualify procedures and personnel according to AWS D1.1/D1.1M, "Structural Welding Code - Steel."

C. Welding Qualifications: Qualify procedures and personnel according to the following:

1. AWS D1.1/D1.1M, "Structural Welding Code - Steel."
2. AWS D1.2/D1.2M, "Structural Welding Code - Aluminum."
3. AWS D1.6, "Structural Welding Code - Stainless Steel."

1.6 PROJECT CONDITIONS

A. Field Measurements: Verify actual locations of walls and other construction contiguous with metal fabrications by field measurements before fabrication.

1.7 COORDINATION AND SCHEDULING

A. Coordinate installation of anchorages for railings. Furnish setting drawings, templates, and directions for installing anchorages, including sleeves, concrete inserts, anchor bolts, and items with integral anchors, that are to be embedded in concrete or masonry. Deliver such items to Project site in time for installation.

B. Schedule installation so wall attachments are made only to completed walls. Do not support railings temporarily by any means that do not satisfy structural performance requirements.

PART 2 - PRODUCTS

2.1 MANUFACTURERS

A. Manufacturers: Subject to compliance with requirements, provide products by one of the following:

1. Aluminum Pipe and Tube Railings:

a. Basis-of-Design: Superior Aluminum Products, Inc.; Series 550 pipe picket railing.
b. ATR Technologies, Inc.
c. Blum, Julius & Co., Inc.
d. Braun, J. G., Company; a division of the Wagner Companies.
e. CraneVeyor Corp.
f. Hollaender Manufacturing Company.
g. Sterling Dula Architectural Products, Inc.; Div. of Kane Manufacturing.
h. Thompson Fabricating, LLC.
i. Tri Tech, Inc.
j. Tubular Specialties Manufacturing, Inc.
k. Wagner, R & B, Inc.; a division of the Wagner Companies.

2.2 METALS, GENERAL

A. Metal Surfaces, General: Provide materials with smooth surfaces, without seam marks, roller marks, rolled trade names, stains, discolorations, or blemishes.

B. Brackets, Flanges, and Anchors: Cast or formed metal of same type of material and finish as supported rails unless otherwise indicated.

2.3 ALUMINUM

A. Aluminum, General: Provide alloy and temper recommended by aluminum producer and finisher for type of use and finish indicated, and with not less than the strength and durability properties of alloy and temper designated below for each aluminum form required.

B. Extruded Bars and Tubing: ASTM B 221 (ASTM B 221M), Alloy 6063-T5/T52.

C. Extruded Structural Pipe and Round Tubing: ASTM B 429/B 429M, Alloy 6063-T6.

1. Provide Standard Weight (Schedule 40) pipe, unless otherwise indicated.

D. Drawn Seamless Tubing: ASTM B 210 (ASTM B 210M), Alloy 6063-T832.

E. Plate and Sheet: ASTM B 209 (ASTM B 209M), Alloy 6061-T6.

F. Die and Hand Forgings: ASTM B 247 (ASTM B 247M), Alloy 6061-T6.

G. Castings: ASTM B 26/B 26M, Alloy A356.0-T6.

2.4 FASTENERS

A. General: Provide the following:

1. Aluminum Railings: Type 304 stainless-steel fasteners.

B. Fasteners for Anchoring Railings to Other Construction: Select fasteners of type, grade, and class required to produce connections suitable for anchoring railings to other types of construction indicated and capable of withstanding design loads.

C. Fasteners for Interconnecting Railing Components:

1. Provide concealed fasteners for interconnecting railing components and for attaching them to other work, unless exposed fasteners are unavoidable or are the standard fastening method for railings indicated.
2. Provide tamper-resistant flat-head machine screws for exposed fasteners unless otherwise indicated.

D. Post-Installed Anchors: Torque-controlled expansion anchors or chemical anchors capable of sustaining, without failure, a load equal to six times the load imposed when installed in unit masonry and four times the load imposed when installed in concrete, as determined by testing according to ASTM E 488, conducted by a qualified independent testing agency.

2.5 MISCELLANEOUS MATERIALS

A. Welding Rods and Bare Electrodes: Select according to AWS specifications for metal alloy welded.

1. For aluminum railings, provide type and alloy as recommended by producer of metal to be welded and as required for color match, strength, and compatibility in fabricated items.

B. Bituminous Paint: Cold-applied asphalt emulsion complying with ASTM D 1187.

C. Nonshrink, Nonmetallic Grout: Factory-packaged, nonstaining, noncorrosive, nongaseous grout complying with ASTM C 1107. Provide grout specifically recommended by manufacturer for interior and exterior applications.

D. Anchoring Cement: Factory-packaged, nonshrink, nonstaining, hydraulic-controlled expansion cement formulation for mixing with water at Project site to create pourable anchoring, patching, and grouting compound.

1. Water-Resistant Product: At exterior locations provide formulation that is resistant to erosion from water exposure without needing protection by a sealer or waterproof coating and that is recommended by manufacturer for exterior use.

2.6 FABRICATION

A. General: Fabricate railings to comply with requirements indicated for design, dimensions, member sizes and spacing, details, finish, and anchorage, but not less than that required to support structural loads.

B. Assemble railings in the shop to greatest extent possible to minimize field splicing and assembly. Disassemble units only as necessary for shipping and handling limitations. Clearly mark units for reassembly and coordinated installation. Use connections that maintain structural value of joined pieces.

C. Cut, drill, and punch metals cleanly and accurately. Remove burrs and ease edges to a radius of approximately 1/32 inch (1 mm) unless otherwise indicated. Remove sharp or rough areas on exposed surfaces.

D. Form work true to line and level with accurate angles and surfaces.

E. Fabricate connections that will be exposed to weather in a manner to exclude water. Provide weep holes where water may accumulate.

F. Cut, reinforce, drill, and tap as indicated to receive finish hardware, screws, and similar items.

G. Connections: Fabricate railings with welded connections unless otherwise indicated.

H. Welded Connections: Cope components at connections to provide close fit, or use fittings designed for this purpose. Weld all around at connections, including at fittings.

1. Use materials and methods that minimize distortion and develop strength and corrosion resistance of base metals.
2. Obtain fusion without undercut or overlap.
3. Remove flux immediately.
4. At exposed connections, finish exposed surfaces smooth and blended so no roughness shows after finishing and welded surface matches contours of adjoining surfaces.

I. Welded Connections for Aluminum Pipe: Fabricate railings to interconnect members with concealed internal welds that eliminate surface grinding, using manufacturer's standard system of sleeve and socket fittings.

J. Form changes in direction as follows:

1. By radius bends of radius indicated.
2. By premanufactured elbow fittings for guardrails.

K. Bend members in jigs to produce uniform curvature for each configuration required; maintain cross section of member throughout entire bend without buckling, twisting, cracking, or otherwise deforming exposed surfaces of components.

L. Close exposed ends of railing members with prefabricated end fittings.

M. Provide wall returns at ends of wall-mounted handrails unless otherwise indicated. Close ends of returns unless clearance between end of rail and wall is 1/4 inch (6 mm) or less.

N. Brackets, Flanges, Fittings, and Anchors: Provide wall brackets, flanges, miscellaneous fittings, and anchors to interconnect railing members to other work unless otherwise indicated.

1. At brackets and fittings fastened to plaster or gypsum board partitions, provide crush-resistant fillers, or other means to transfer loads through wall finishes to structural supports and prevent bracket or fitting rotation and crushing of substrate.
2. Wall Bracket: Provide cast aluminum bracket with concealed attachment.

a. Basis of Design: **Blum, Julius & Co., Inc.; 389**.

O. Provide inserts and other anchorage devices for connecting railings to concrete or masonry work. Fabricate anchorage devices capable of withstanding loads imposed by railings. Coordinate anchorage devices with supporting structure.

P. For railing posts set in concrete, provide steel sleeves not less than 6 inches (150 mm) long with inside dimensions not less than 1/2 inch (13 mm) greater than outside dimensions of post, with metal plate forming bottom closure.

Q. For removable railing posts, fabricate slip-fit sockets from stainless-steel tube or pipe whose ID is sized for a close fit with posts; limit movement of post without lateral load, measured at top, to not more than one-fortieth of post height. Provide socket covers designed and fabricated to resist being dislodged.

1. Provide chain with eye, snap hook, and staple across gaps formed by removable railing sections at locations indicated. Fabricate from same metal as railings.

R. Toe Boards: Where indicated, provide toe boards at railings around openings and at edge of open-sided floors and platforms. Fabricate to dimensions and details indicated.

2.7 FINISHES, GENERAL

A. Comply with NAAMM's "Metal Finishes Manual for Architectural and Metal Products" for recommendations for applying and designating finishes.

B. Protect mechanical finishes on exposed surfaces from damage by applying a strippable, temporary protective covering before shipping.

C. Provide exposed fasteners with finish matching appearance, including color and texture, of railings.

2.8 ALUMINUM FINISHES

A. Mechanical Finish: AA-M12 (Mechanical Finish: nonspecular as fabricated).

B. Clear Anodic Finish: AAMA 611, AA-M12C22A41, Class I, 0.018 mm or thicker.

PART 3 - EXECUTION

3.1 EXAMINATION

A. Examine plaster and gypsum board assemblies, where reinforced to receive anchors, to verify that locations of concealed reinforcements have been clearly marked for Installer. Locate reinforcements and mark locations if not already done.

3.2 INSTALLATION, GENERAL

A. Fit exposed connections together to form tight, hairline joints.

B. Perform cutting, drilling, and fitting required for installing railings. Set railings accurately in location, alignment, and elevation; measured from established lines and levels and free of rack.

1. Do not weld, cut, or abrade surfaces of railing components that have been coated or finished after fabrication and that are intended for field connection by mechanical or other means without further cutting or fitting.
2. Set posts plumb within a tolerance of 1/16 inch in 3 feet (2 mm in 1 m).
3. Align rails so variations from level for horizontal members and variations from parallel with rake of steps and ramps for sloping members do not exceed 1/4 inch in 12 feet (5 mm in 3 m).

C. Corrosion Protection: Coat concealed surfaces of aluminum that will be in contact with grout, concrete, masonry, wood, or dissimilar metals, with a heavy coat of bituminous paint.

D. Adjust railings before anchoring to ensure matching alignment at abutting joints.

E. Fastening to In-Place Construction: Use anchorage devices and fasteners where necessary for securing railings and for properly transferring loads to in-place construction.

3.3 RAILING CONNECTIONS

A. Welded Connections: Use fully welded joints for permanently connecting railing components. Comply with requirements for welded connections in "Fabrication" Article whether welding is performed in the shop or in the field.

B. Expansion Joints: Install expansion joints at locations indicated but not farther apart than required to accommodate thermal movement. Provide slip-joint internal sleeve extending 2 inches (50 mm) beyond joint on either side, fasten internal sleeve securely to one side, and locate joint within 6 inches (150 mm) of post.

3.4 ANCHORING POSTS

A. Form or core-drill holes not less than 5 inches (125 mm) deep and 3/4 inch (20 mm) larger than OD of post for installing posts in concrete. Clean holes of loose material, insert posts, and fill annular space between post and concrete with nonshrink, nonmetallic grout or anchoring cement, mixed and placed to comply with anchoring material manufacturer's written instructions.

B. Leave anchorage joint exposed with 1/8-inch (3-mm) buildup, sloped away from post.

C. Anchor posts to metal surfaces with oval flanges, angle type, or floor type as required by conditions, connected to posts and to metal supporting members as follows:

1. For aluminum pipe railings, attach posts using fittings designed and engineered for this purpose.

3.5 ATTACHING RAILINGS

A. Anchor railing ends at walls with round flanges anchored to wall construction and welded to railing ends.

B. Attach railings to wall with wall brackets, except where end flanges are used. Provide brackets with 1-1/2-inch (38-mm) clearance from inside face of handrail and finished wall surface. Locate brackets as indicated or, if not indicated, at spacing required to support structural loads.

1. Use type of bracket with flange tapped for concealed anchorage to threaded hanger bolt.
2. Locate brackets as indicated or, if not indicated, at spacing required to support structural loads.

C. Secure wall brackets and railing end flanges to building construction as follows:

1. For concrete and solid masonry anchorage, use drilled-in expansion shields and hanger or lag bolts.
2. For hollow masonry anchorage, use toggle bolts.
3. For wood stud partitions, use hanger or lag bolts set into studs or wood backing between studs. Coordinate with carpentry work to locate backing members.
4. For steel-framed partitions, use hanger or lag bolts set into wood backing between studs. Coordinate with stud installation to locate backing members.

3.6 ADJUSTING AND CLEANING

A. Clean aluminum by washing thoroughly with clean water and soap and rinsing with clean water.

3.7 PROTECTION

A. Protect finishes of railings from damage during construction period with temporary protective coverings approved by railing manufacturer. Remove protective coverings at time of Substantial Completion.

B. Restore finishes damaged during installation and construction period so no evidence remains of corrective work.

1. Shop finish items that cannot be properly refinished in the field.
2. Provide new units where damaged units cannot be refinished in field or shop.

END OF SECTION 055213

SECTION 061000 - ROUGH CARPENTRY

PART 1 - GENERAL

1.1 RELATED DOCUMENTS

A. Drawings and general provisions of the Contract, including General and Supplementary Conditions and Division 01 Specification Sections, apply to this Section.

1.2 SUMMARY

A. Section Includes:

1. Framing with dimension lumber.
2. Wood blocking, cants, and nailers.
3. Wood furring.
4. Plywood backing panels.

1.3 DEFINITIONS

A. Exposed Framing: Framing not concealed by other construction.

B. Dimension Lumber: Lumber of 2 inches nominal (38 mm actual) or greater but less than 5 inches nominal (114 mm actual) in least dimension.

C. Lumber grading agencies, and the abbreviations used to reference them, include the following:

1. NeLMA: Northeastern Lumber Manufacturers' Association.
2. NLGA: National Lumber Grades Authority.
3. SPIB: The Southern Pine Inspection Bureau.
4. WCLIB: West Coast Lumber Inspection Bureau.
5. WWPA: Western Wood Products Association.

1.4 DELIVERY, STORAGE, AND HANDLING

A. Stack lumber flat with spacers beneath and between each bundle to provide air circulation. Protect lumber from weather by covering with waterproof sheeting, securely anchored. Provide for air circulation around stacks and under coverings.

PART 2 - PRODUCTS

2.1 WOOD PRODUCTS, GENERAL

A. Lumber: DOC PS 20 and applicable rules of grading agencies indicated. If no grading agency is indicated, provide lumber that complies with the applicable rules of any rules-writing agency certified by the ALSC Board of Review. Provide lumber graded by an agency certified by the ALSC Board of Review to inspect and grade lumber under the rules indicated.

1. Factory mark each piece of lumber with grade stamp of grading agency.
2. Where nominal sizes are indicated, provide actual sizes required by DOC PS 20 for moisture content specified. Where actual sizes are indicated, they are minimum dressed sizes for dry lumber.
3. Provide dressed lumber, S4S, unless otherwise indicated.

B. Maximum Moisture Content of Lumber: 15 percent for 2-inch nominal (38-mm actual) thickness or less, 19 percent for more than 2-inch nominal (38-mm actual) thickness unless otherwise indicated.

2.2 WOOD-PRESERVATIVE-TREATED LUMBER

A. Preservative Treatment by Pressure Process: AWPA U1; Use Category UC2.

1. Preservative Chemicals: Acceptable to authorities having jurisdiction and containing no arsenic or chromium.
2. For exposed items indicated to receive a stained or natural finish, use chemical formulations that do not require incising, contain colorants, bleed through, or otherwise adversely affect finishes.

B. Kiln-dry lumber after treatment to a maximum moisture content of 19 percent. Do not use material that is warped or that does not comply with requirements for untreated material.

C. Mark lumber with treatment quality mark of an inspection agency approved by the ALSC Board of Review.

D. Application: Treat all rough carpentry unless otherwise indicated.

2.3 MISCELLANEOUS LUMBER

A. General: Provide miscellaneous lumber indicated and lumber for support or attachment of other construction, including the following:

1. Blocking.
2. Nailers.
3. Cants.
4. Furring.
5. Grounds.

B. For items of dimension lumber size, provide Standard, Stud, or No. 3 grade lumber of any species.

1. Maximum moister content: 15%.

C. For blocking not used for attachment of other construction, Utility, Stud, or No. 3 grade lumber of any species may be used provided that it is cut and selected to eliminate defects that will interfere with its attachment and purpose.

D. For blocking and nailers used for attachment of other construction, select and cut lumber to eliminate knots and other defects that will interfere with attachment of other work.

E. For furring strips for installing plywood or hardboard paneling, select boards with no knots capable of producing bent-over nails and damage to paneling.

2.4 PLYWOOD BACKING PANELS

A. Equipment Backing Panels: DOC PS 1, Exposure 1, C-D Plugged, in thickness indicated or, if not indicated, not less than nominal thickness.

2.5 FASTENERS

A. General: Provide fasteners of size and type indicated that comply with requirements specified in this article for material and manufacture.

1. Where rough carpentry is exposed to weather, in ground contact, pressure-preservative treated, or in area of high relative humidity, provide fasteners of Type 304 stainless steel.

B. Nails, Brads, and Staples: ASTM F 1667.

C. Power-Driven Fasteners: NES NER-272.

D. Wood Screws: ASME B18.6.1.

E. Lag Bolts: ASME B18.2.1 (ASME B18.2.3.8M).

F. Bolts: Steel bolts complying with ASTM A 307, Grade A (ASTM F 568M, Property Class 4.6); with ASTM A 563 (ASTM A 563M) hex nuts and, where indicated, flat washers.

2.6 MISCELLANEOUS MATERIALS

A. Sill-Sealer Gaskets: Closed-cell neoprene foam, 1/4 inch (6.4 mm) thick, selected from manufacturer's standard widths to suit width of sill members indicated.

PART 3 - EXECUTION

3.1 INSTALLATION, GENERAL

A. Set rough carpentry to required levels and lines, with members plumb, true to line, cut, and fitted. Fit rough carpentry to other construction; scribe and cope as needed for accurate fit. Locate furring, nailers, blocking, grounds, and similar supports to comply with requirements for attaching other construction.

B. Framing Standard: Comply with AF&PA's WCD 1, "Details for Conventional Wood Frame Construction," unless otherwise indicated.

C. Install plywood backing panels by fastening to studs; coordinate locations with utilities requiring backing panels.

D. Install sill sealer gasket to form continuous seal between sill plates and foundation walls.

E. Do not splice structural members between supports unless otherwise indicated.

F. Provide blocking and framing as indicated and as required to support facing materials, fixtures, specialty items, and trim.

1. Provide metal clips for fastening gypsum board or lath at corners and intersections where framing or blocking does not provide a surface for fastening edges of panels. Space clips not more than 16 inches (406 mm) o.c.

G. Sort and select lumber so that natural characteristics will not interfere with installation or with fastening other materials to lumber. Do not use materials with defects that interfere with function of member or pieces that are too small to use with minimum number of joints or optimum joint arrangement.

H. Comply with AWPA M4 for applying field treatment to cut surfaces of preservative-treated lumber.

1. Use inorganic boron for items that are continuously protected from liquid water.
2. Use copper naphthenate for items not continuously protected from liquid water.

I. Securely attach rough carpentry work to substrate by anchoring and fastening as indicated, complying with the following:
   1. Table 2304.9.1, "Fastening Schedule," in ICC's International Building Code.

J. Use steel common nails unless otherwise indicated. Select fasteners of size that will not fully penetrate members where opposite side will be exposed to view or will receive finish materials. Make tight connections between members. Install fasteners without splitting wood. Drive nails snug but do not countersink nail heads unless otherwise indicated.

K. For exposed work, arrange fasteners in straight rows parallel with edges of members, with fasteners evenly spaced, and with adjacent rows staggered.

   1. Comply with indicated fastener patterns where applicable.
   2. Use common nails unless otherwise indicated. Drive nails snug but do not countersink nail heads.

3.2 WOOD BLOCKING AND NAILER INSTALLATION

A. Install where indicated and where required for attaching other work. Form to shapes indicated and cut as required for true line and level of attached work. Coordinate locations with other work involved.

B. Attach items to substrates to support applied loading. Recess bolts and nuts flush with surfaces unless otherwise indicated.

C. Provide permanent grounds of dressed, pressure-preservative-treated, key-beveled lumber not less than 1-1/2 inches (38 mm) wide and of thickness required to bring face of ground to exact thickness of finish material. Remove temporary grounds when no longer required.

3.3 PROTECTION

A. Protect wood that has been treated with inorganic boron (SBX) from weather. If, despite protection, inorganic boron-treated wood becomes wet, apply EPA-registered borate treatment. Apply borate solution by spraying to comply with EPA-registered label.

B. Protect rough carpentry from weather. If, despite protection, rough carpentry becomes sufficiently wet that moisture content exceeds that specified, apply EPA-registered borate treatment. Apply borate solution by spraying to comply with EPA-registered label.

END OF SECTION 061000

SECTION 061600 - SHEATHING

PART 1 - GENERAL

1.1 RELATED DOCUMENTS

A. Drawings and general provisions of the Contract, including General and Supplementary Conditions and Division 01 Specification Sections, apply to this Section.

1.2 SUMMARY

A. Section Includes:

1. Wall sheathing.
2. Roof sheathing.
3. Composite nail base insulated roof sheathing.
4. Sheathing joint and penetration treatment.
5. Weather-resistant sheathing wrap.

B. Related Requirements:

1. Division 06 Section "Rough Carpentry" for plywood backing panels.

1.3 ACTION SUBMITTALS

A. Product Data: For each type of process and factory-fabricated product. Indicate component materials and dimensions and include construction and application details.

1.4 DELIVERY, STORAGE, AND HANDLING

A. Stack panels flat with spacers beneath and between each bundle to provide air circulation. Protect sheathing from weather by covering with waterproof sheeting, securely anchored. Provide for air circulation around stacks and under coverings.

PART 2 - PRODUCTS

2.1 WOOD PANEL PRODUCTS

A. Plywood: DOC PS 1.

B. Thickness: As needed to comply with requirements specified, but not less than thickness indicated.

C. Factory mark panels to indicate compliance with applicable standard.

2.2 PRESERVATIVE-TREATED PLYWOOD

A. Preservative Treatment by Pressure Process: AWPA U1; Use Category UC2.

1. Preservative Chemicals: Acceptable to authorities having jurisdiction and containing no arsenic or chromium.

B. Mark plywood with appropriate classification marking of an inspection agency acceptable to authorities having jurisdiction.

C. Application: Treat all plywood unless otherwise indicated.

2.3 WALL SHEATHING

A. Glass-Mat Gypsum Wall Sheathing: ASTM C 1177/1177M.

1. Products: Subject to compliance with requirements, provide one of the following:

a. CertainTeed Corporation; GlasRoc.
b. Basis of Design: **G-P Gypsum Corporation; DensGlass Exterior Sheathing** (formerly DensGlass Gold).
c. Temple-Inland Inc.; GreenGlass
d. United States Gypsum Co.; Securock.

2. Type and Thickness: Type X, 5/8 inch (15.9 mm) thick.
3. Size: 48 by 96 inches (1219 by 2438 mm) for vertical installation.

2.4 ROOF SHEATHING

A. Plywood Roof Sheathing: Exterior, Structural I sheathing.

1. Span Rating: Not less than 16/0.
2. Nominal Thickness: Not less than 15/32 inch (11.9 mm), and as noted on Structural Drawings.
3. See Structural Drawings for additional requirements.
4. Fire retardant treated.

2.5 FASTENERS

A. General: Provide fasteners of size and type indicated that comply with requirements specified in this article for material and manufacture.

1. For roof and wall sheathing, provide fasteners of Type 304 stainless steel.

B. Nails, Brads, and Staples: ASTM F 1667.

C. Power-Driven Fasteners: NES NER-272.

D. Wood Screws: ASME B18.6.1.

E. Screws for Fastening Gypsum Sheathing to Cold-Formed Metal Framing: Steel drill screws, in length recommended by sheathing manufacturer for thickness of sheathing to be attached, with organic-polymer or other corrosion-protective coating having a salt-spray resistance of more than 800 hours according to ASTM B 117.

1. For steel framing less than 0.0329 inch (0.835 mm) thick, use screws that comply with ASTM C 1002.
2. For steel framing from 0.033 to 0.112 inch (0.84 to 2.84 mm) thick, use screws that comply with ASTM C 954.

2.6 WEATHER-RESISTANT SHEATHING WRAP

A. Building Wrap: ASTM E 1677, Type I air retarder; with flame-spread and smoke-developed indexes of less than 25 and 450, respectively, when tested according to ASTM E 84; UV stabilized; and acceptable to authorities having jurisdiction

1. Products: Subject to compliance with requirements, provide one of the following:

   a. Dow Chemical Company (The); Styrofoam Weathermate Plus Brand Housewrap.
   b. Basis of Design: **DuPont (E. I. du Pont de Nemours and Company); Tyvek CommercialWrap**.
   c. Ludlow Coated Products; Barricade Building Wrap.
   d. Pactiv, Inc.; GreenGuard Ultra Wrap.
   e. Raven Industries Inc.; Rufco-Wrap.
   f. Reemay, Inc.; Typar HouseWrap.

2. Water-Vapor Permeance: Not less than 125 g through 1 sq. m of surface in 24 hours per ASTM E 96, Desiccant Method (Procedure A).
3. Allowable UV Exposure Time: Not less than three months.

B. Building-Wrap Tape: Pressure-sensitive plastic tape recommended by building-wrap manufacturer for sealing joints and penetrations in building wrap.

2.7 SHEATHING JOINT-AND-PENETRATION TREATMENT MATERIALS

A. Sealant for Glass-Mat Gypsum Sheathing: Silicone emulsion sealant complying with ASTM C 834, compatible with sheathing tape and sheathing and recommended by tape and sheathing manufacturers for use with glass-fiber sheathing tape and for covering exposed fasteners.

1. Sheathing Tape: Self-adhering glass-fiber tape, minimum 2 inches (50 mm) wide, 10 by 10 or 10 by 20 threads/inch (390 by 390 or 390 by 780 threads/m), of type recommended by sheathing and tape manufacturers for use with silicone emulsion sealant in sealing joints in glass-mat gypsum sheathing and with a history of successful in-service use.

2.8 MISCELLANEOUS MATERIALS

A. Adhesives for Field Gluing Panels to Framing: Formulation complying with APA AFG-01 that is approved for use with type of construction panel indicated by manufacturers of both adhesives and panels.

1. Adhesives shall have a VOC content of 50 g/L or less when calculated according to 40 CFR 59, Subpart D (EPA Method 24).

PART 3 - EXECUTION

3.1 INSTALLATION, GENERAL

A. Do not use materials with defects that impair quality of sheathing or pieces that are too small to use with minimum number of joints or optimum joint arrangement. Arrange joints so that pieces do not span between fewer than three support members.

B. Cut panels at penetrations, edges, and other obstructions of work; fit tightly against abutting construction unless otherwise indicated.

C. Securely attach to substrate by fastening as indicated, complying with the following:

1. NES NER-272 for power-driven fasteners.
2. Table 2304.9.1, "Fastening Schedule," in ICC's "International Building Code."

D. Use common wire nails unless otherwise indicated. Select fasteners of size that will not fully penetrate members where opposite side will be exposed to view or will receive finish materials. Make tight connections. Install fasteners without splitting wood.

E. Coordinate wall and roof sheathing installation with flashing and joint-sealant installation so these materials are installed in sequence and manner that prevent exterior moisture from passing through completed assembly.

F. Do not bridge building expansion joints; cut and space edges of panels to match spacing of structural support elements.

G. Coordinate sheathing installation with installation of materials installed over sheathing so sheathing is not exposed to precipitation or left exposed at end of the workday when rain is forecast.

3.2 WOOD STRUCTURAL PANEL INSTALLATION

A. General: Comply with applicable recommendations in APA Form No. E30, "Engineered Wood Construction Guide," for types of structural-use panels and applications indicated.

B. Fastening Methods: Fasten panels as indicated below:

1. Wall and Roof Sheathing:

a. Nail to wood framing.
b. Screw to cold-formed metal framing.
c. Space panels 1/8 inch (3 mm) apart at edges and ends.

3.3 GYPSUM SHEATHING INSTALLATION

A. Comply with GA-253 and with manufacturer's written instructions.

1. Fasten gypsum sheathing to wood framing with screws.
2. Fasten gypsum sheathing to cold-formed metal framing with screws.
3. Install boards with a 3/8-inch (9.5-mm) gap where non-load-bearing construction abuts structural elements.
4. Install boards with a 1/4-inch (6.4-mm) gap where they abut masonry or similar materials that might retain moisture, to prevent wicking.

B. Apply fasteners so heads bear tightly against face of sheathing, but do not cut into facing.

C. Horizontal Installation: Install sheathing with V-grooved edge down and tongue edge up. Interlock tongue with groove to bring long edges in contact with edges of adjacent boards without forcing. Abut ends of boards over centers of studs, and stagger end joints of adjacent boards not less than one stud spacing. Attach boards at perimeter and within field of board to each steel stud.

1. Space fasteners approximately 8 inches (200 mm) o.c. and set back a minimum of 3/8 inch (9.5 mm) from edges and ends of boards.
2. For sheathing under stucco cladding, boards may be initially tacked in place with screws if overlying self-furring metal lath is screw-attached through sheathing to studs immediately after sheathing is installed.

D. Vertical Installation: Install board vertical edges centered over studs. Abut ends and edges of each board with those of adjacent boards. Attach boards at perimeter and within field of board to each stud.

1. Space fasteners approximately 8 inches (200 mm) o.c. and set back a minimum of 3/8 inch (9.5 mm) from edges and ends of boards.
2. For sheathing under stucco cladding, boards may be initially tacked in place with screws if overlying self-furring metal lath is screw-attached through sheathing to studs immediately after sheathing is installed.

3.4 WEATHER-RESISTANT SHEATHING-WRAP INSTALLATION

A. General: Cover sheathing with weather-resistant sheathing paper as follows:

1. Cut back barrier 1/2 inch on each side of the break in supporting members at expansion- or control-joint locations.
2. Apply barrier to cover vertical flashing with a minimum 4-inch overlap, unless otherwise indicated.

B. Building Wrap: Comply with manufacturer's written instructions.

1. Seal seams, edges, fasteners, and penetrations with tape.
2. Extend into jambs of openings and seal corners with tape.

3.5 SHEATHING JOINT-AND-PENETRATION TREATMENT

A. Seal sheathing joints according to sheathing manufacturer's written instructions.

1. Apply elastomeric sealant to joints and fasteners and trowel flat. Apply sufficient quantity of sealant to completely cover joints and fasteners after troweling. Seal other penetrations and openings.
2. Apply glass-fiber sheathing tape to glass-mat gypsum sheathing board joints, and apply and trowel silicone emulsion sealant to embed entire face of tape in sealant. Apply sealant to exposed fasteners with a trowel so fasteners are completely covered. Seal other penetrations and openings.

3. Apply sheathing tape to joints between foam-plastic sheathing panels and at items penetrating sheathing. Apply at upstanding flashing to overlap both flashing and sheathing.

END OF SECTION 061600

SECTION 064023 - INTERIOR ARCHITECTURAL WOODWORK

PART 1 - GENERAL

1.1 RELATED DOCUMENTS

A. Drawings and general provisions of the Contract, including General and Supplementary Conditions and Division 01 Specification Sections, apply to this Section.

1.2 SUMMARY

A. This Section includes the following:

1. Interior standing and running trim.
2. Solid-surfacing-material countertops and window sills.
3. Shop finishing of interior woodwork.

B. Related Sections include the following:

1. Division 12 Section "Manufactured Wood Casework" for scheduled casework.

1.3 DEFINITIONS

A. Interior architectural woodwork includes wood furring, blocking, shims, and hanging strips for installing woodwork items unless concealed within other construction before woodwork installation.

1.4 SUBMITTALS

A. Product Data: For each type of product indicated, including accessories and finishing materials and processes.

B. Shop Drawings: Show location of each item, dimensioned plans and elevations, large-scale details, attachment devices, and other components.

1. Show locations and sizes of furring, blocking, and hanging strips, including concealed blocking and reinforcement specified in other Sections.
2. Show locations and sizes of cutouts and holes for other items installed in architectural woodwork.

C. Samples for Initial Selection:

1. Shop-applied transparent finishes.
2. Plastic laminates.
3. PVC edge material.
4. Solid-surfacing materials.

1.5 QUALITY ASSURANCE

A. Fabricator Qualifications: Shop that employs skilled workers who custom-fabricate products similar to those required for this Project and whose products have a record of successful in-service performance.

B. Installer Qualifications: Certified participant in AWI's Quality Certification Program.

C. Source Limitations: Engage a qualified woodworking firm to assume undivided responsibility for production of interior architectural woodwork with sequence-matched wood veneers.

D. Quality Standard: Unless otherwise indicated, comply with AWI's "Architectural Woodwork Quality Standards" for grades of interior architectural woodwork indicated for construction, finishes, installation, and other requirements.

1.6 DELIVERY, STORAGE, AND HANDLING

A. Do not deliver woodwork until painting and similar operations that could damage woodwork have been completed in installation areas. If woodwork must be stored in other than installation areas, store only in areas where environmental conditions comply with requirements specified in "Project Conditions" Article.

1.7 PROJECT CONDITIONS

A. Environmental Limitations: Do not deliver or install woodwork until building is enclosed, wet work is complete, and HVAC system is operating and maintaining temperature between 60 and 90 deg F (16 and 32 deg C) and relative humidity between 43 and 70 percent during the remainder of the construction period.

B. Field Measurements: Where woodwork is indicated to fit to other construction, verify dimensions of other construction by field measurements before fabrication, and indicate measurements on Shop Drawings. Coordinate fabrication schedule with construction progress to avoid delaying the Work.

1. Locate concealed framing, blocking, and reinforcements that support woodwork by field measurements before being enclosed, and indicate measurements on Shop Drawings.

1.8 COORDINATION

A. Coordinate sizes and locations of framing, blocking, furring, reinforcements, and other related units of Work specified in other Sections to ensure that interior architectural woodwork can be supported and installed as indicated.

PART 2 - PRODUCTS

2.1 MATERIALS

A. General: Provide materials that comply with requirements of AWI's quality standard for each type of woodwork and quality grade specified, unless otherwise indicated.

B. Wood Species and Cut for Transparent Finish: Red oak, plain sawn or sliced.

C. Wood Species for Opaque Finish: Any closed-grain hardwood.

D. Wood Products: Comply with the following:

1. Hardboard: AHA A135.4.
2. Medium-Density Fiberboard: ANSI A208.2, Grade MD.
3. Particleboard: ANSI A208.1, Grade M-2.
4. Particleboard: Straw-based particleboard complying with requirements in ANSI A208.1, Grade M-2, except for density.
5. Softwood Plywood: DOC PS 1, Medium Density Overlay.
6. Veneer-Faced Panel Products (Hardwood Plywood): HPVA HP-1.

E. Solid-Surfacing Material: Homogeneous solid sheets of filled plastic resin complying with ISSFA-2.

1. Manufacturers: Subject to compliance with requirements, provide products by one of the following:

    a. E. I. du Pont de Nemours and Company.
    b. Formica Corporation.
    c. LG Chemical, Ltd.
    d. Meganite Inc.; a division of the Pyrochem Group.
    e. Nevamar Company, LLC; Decorative Products Div.
    f. Samsung; Cheil Industries Inc.
    g. Wilsonart International; Div. of Premark International, Inc.

2. Type: Standard type, unless Special Purpose type is indicated.
3. Colors and Patterns: As selected by Architect from manufacturer's full range.

2.2 MISCELLANEOUS MATERIALS

A. Furring, Blocking, Shims, and Hanging Strips: Softwood or hardwood lumber, kiln dried to less than 15 percent moisture content.

B. Anchors: Select material, type, size, and finish required for each substrate for secure anchorage. Provide nonferrous-metal or hot-dip galvanized anchors and inserts on inside face of exterior walls and elsewhere as required for corrosion resistance. Provide toothed-steel or lead expansion sleeves for drilled-in-place anchors.

2.3 FABRICATION, GENERAL

A. Interior Woodwork Grade: Unless otherwise indicated, provide Premium-grade interior woodwork complying with referenced quality standard.

B. Wood Moisture Content: Comply with requirements of referenced quality standard for wood moisture content in relation to ambient relative humidity during fabrication and in installation areas.

C. Fabricate woodwork to dimensions, profiles, and details indicated. Ease edges.

D. Complete fabrication, including assembly, finishing, and hardware application, to maximum extent possible before shipment to Project site. Disassemble components only as necessary for shipment and installation. Where necessary for fitting at site, provide ample allowance for scribing, trimming, and fitting.

1. Notify Architect seven days in advance of the dates and times woodwork fabrication will be complete.
2. Trial fit assemblies at fabrication shop that cannot be shipped completely assembled. Install dowels, screws, bolted connectors, and other fastening devices that can be removed after trial fitting. Verify that various parts fit as intended and check measurements of assemblies against field measurements indicated on Shop Drawings before disassembling for shipment.

2.4 INTERIOR STANDING AND RUNNING TRIM FOR OPAQUE FINISH

A. Wood Species: Any closed-grain hardwood.

B. Backout or groove backs of flat trim members and kerf backs of other wide, flat members, except for members with ends exposed in finished work.

C. Assemble casings in plant except where limitations of access to place of installation require field assembly.

D. Assemble moldings in plant to maximum extent possible. Miter corners in plant and prepare for field assembly with bolted fittings designed to pull connections together.

2.5 SOLID-SURFACING-MATERIAL COUNTERTOPS AND WINDOW SILLS

A. Solid-Surfacing-Material Thickness: 1/2 inch (13 mm).

B. Colors, Patterns, and Finishes: Provide materials and products that result in colors of solid-surfacing material complying with the following requirements:

1. As selected by Architect from manufacturer's full range.

C. Fabricate tops in one piece, unless otherwise indicated. Comply with solid-surfacing-material manufacturer's written recommendations for adhesives, sealers, fabrication, and finishing.

1. Fabricate tops with loose backsplashes for field application.

2.6 SHOP FINISHING

A. Grade: Provide finishes of same grades as items to be finished.

B. General: Finish architectural woodwork at fabrication shop as specified in this Section. Defer only final touchup, cleaning, and polishing until after installation.

C. Preparation for Finishing: Comply with referenced quality standard for sanding, filling countersunk fasteners, sealing concealed surfaces, and similar preparations for finishing architectural woodwork, as applicable to each unit of work.

1. Backpriming: Apply one coat of sealer or primer, compatible with finish coats, to concealed surfaces of woodwork. Apply two coats to back of paneling and to end-grain surfaces. Concealed surfaces of plastic-laminate-clad woodwork do not require backpriming when surfaced with plastic laminate, backing paper, or thermoset decorative panels.

D. Transparent Finish:

1. AWI Finish System: Conversion varnish.
2. Wash Coat for Stained Finish: Apply wash-coat sealer to woodwork made from closed-grain wood before staining and finishing.
3. Open Finish for Open-Grain Woods: Do not apply filler to open-grain woods.

4. Sheen: Satin, 31-45 gloss units measured on 60-degree gloss meter per ASTM D 523.

E. Opaque Finish:

1. AWI Finish System: Acrylic lacquer.
2. Color: As selected by Architect from manufacturer's full range.
3. Sheen: Satin, 31-45 gloss units measured on 60-degree gloss meter per ASTM D 523.

PART 3 - EXECUTION

3.1 PREPARATION

A. Before installation, condition woodwork to average prevailing humidity conditions in installation areas.

B. Before installing architectural woodwork, examine shop-fabricated work for completion and complete work as required, including removal of packing and backpriming.

3.2 INSTALLATION

A. Grade: Install woodwork to comply with requirements for the same grade specified in Part 2 for fabrication of type of woodwork involved.

B. Assemble woodwork and complete fabrication at Project site to comply with requirements for fabrication in Part 2, to extent that it was not completed in the shop.

C. Install woodwork level, plumb, true, and straight. Shim as required with concealed shims. Install level and plumb (including tops) to a tolerance of 1/8 inch in 96 inches (3 mm in 2400 mm).

D. Scribe and cut woodwork to fit adjoining work, refinish cut surfaces, and repair damaged finish at cuts.

E. Anchor woodwork to anchors or blocking built in or directly attached to substrates. Secure with countersunk, concealed fasteners and blind nailing as required for complete installation. Use fine finishing nails or finishing screws for exposed fastening, countersunk and filled flush with woodwork and matching final finish if transparent finish is indicated.

F. Standing and Running Trim: Install with minimum number of joints possible, using full-length pieces (from maximum length of lumber available) to greatest extent possible. Do not use pieces less than 60 inches (1500 mm) long, except where shorter single-length pieces are necessary. Scarf running joints and stagger in adjacent and related members.

1. Fill gaps, if any, between top of base and wall with plastic wood filler, sand smooth, and finish same as wood base if finished.
2. Install wall railings on indicated metal brackets securely fastened to wall framing.
3. Install standing and running trim with no more variation from a straight line than 1/8 inch in 96 inches (3 mm in 2400 mm).

G. Countertops and Window Sills: Anchor securely by screwing through corner blocks of base cabinets or other supports into underside of countertop.

1. Align adjacent solid-surfacing-material countertops and form seams to comply with manufacturer's written recommendations using adhesive in color to match countertop. Carefully dress joints smooth, remove surface scratches, and clean entire surface.
2. Install countertops with no more than 1/8 inch in 96-inch (3 mm in 2400-mm) sag, bow, or other variation from a straight line.
3. Caulk space between backsplash and wall with sealant specified in Division 07 Section "Joint Sealants."

H. Touch up finishing work specified in this Section after installation of woodwork. Fill nail holes with matching filler where exposed.

3.3 ADJUSTING AND CLEANING

A. Repair damaged and defective woodwork, where possible, to eliminate functional and visual defects; where not possible to repair, replace woodwork. Adjust joinery for uniform appearance.

B. Clean, lubricate, and adjust hardware.

C. Clean woodwork on exposed and semiexposed surfaces. Touch up shop-applied finishes to restore damaged or soiled areas.

END OF SECTION 064023

SECTION 072100 - THERMAL INSULATION

PART 1 - GENERAL

1.1 RELATED DOCUMENTS

A. Drawings and general provisions of the Contract, including General and Supplementary Conditions and Division 01 Specification Sections, apply to this Section.

1.2 SUMMARY

A. Section Includes:

1. Foam-plastic board insulation.
2. Glass-fiber blanket insulation.
3. Spray foam insulation.
4. Vapor retarders.

1.3 ACTION SUBMITTALS

A. Product Data: For each type of product indicated.

1.4 QUALITY ASSURANCE

A. Surface-Burning Characteristics: As determined by testing identical products according to ASTM E 84 by a qualified testing agency. Identify products with appropriate markings of applicable testing agency.

1.5 DELIVERY, STORAGE, AND HANDLING

A. Protect insulation materials from physical damage and from deterioration due to moisture, soiling, and other sources. Store inside and in a dry location. Comply with manufacturer's written instructions for handling, storing, and protecting during installation.

PART 2 - PRODUCTS

2.1 FOAM-PLASTIC BOARD INSULATION

A. Extruded-Polystyrene Board Insulation: ASTM C 578, of type and minimum compressive strength indicated below, with maximum flame-spread and smoke-developed indexes of 75 and 450, respectively, per ASTM E 84.

1. Manufacturers: Subject to compliance with requirements, available manufacturers offering products that may be incorporated into the Work include, but are not limited to, the following:

a. DiversiFoam Products.
b. Dow Chemical Company (The).

c. Owens Corning.
d. Pactiv Building Products.

2. Type IV, 25 psi (173 kPa).

2.2 GLASS-FIBER BLANKET INSULATION

A. Manufacturers: Subject to compliance with requirements, provide products by one of the following:

1. CertainTeed Corporation.
2. Johns Manville.
3. Knauf Insulation.
4. Owens Corning.

B. Unfaced, Glass-Fiber Blanket Insulation: ASTM C 665, Type I; with maximum flame-spread and smoke-developed indexes of 25 and 50, respectively, per ASTM E 84; passing ASTM E 136 for combustion characteristics.

C. Kraft-Faced, Glass-Fiber Blanket Insulation: ASTM C 665, Type II (non-reflective faced), Class C (faced surface not rated for flame propagation); Category 1 (membrane is a vapor barrier).

2.3 SPRAY FOAM INSULATION

A. Open-Cell Polyurethane or Polyicynene Foam Insulation: Spray-applied polyurethane or polyicynene foam, with maximum flame-spread and smoke-developed indexes of 75 and 450, respectively, per ASTM E 84.

1. Manufacturers: Subject to compliance with requirements, provide products by one of the following:

a. Icynene Inc.
b. Demilec
c. Polymaster, Inc.
d. UCSC.

2.4 NAILABLE INSULATION SHEATHING

A. Board Insulation bonded to plywood: high thermal resistive rigid insulation panel composed of a closed cell polyisocyanurate foam core bonded on one side to a coated glass facer and on the other side to fire treated plywood, in NFPA 285 compliant assembly coordinated with work in other Sections.

1. Basis of Design: Subject to compliance with requirements, provide **Hunter Panels; Xci Ply** (www.hunterpanels.com).

a. Substitutions shall be submitted for approval prior to bid.

2. Type: ASTM C 1289, Type V.

a. ASTM D 1621: Grade 3 (25 psi).

3. Fire Resistant Plywood Thickness: 5/8 inch.

a. Flame spread rating 25 or less based on ASTM E 84.

4. Panel Size: 4 feet by 8 feet).
5. Thickness/ R Value: Long term thermal resistance values based on ASTM C 1289 with a 15-year time weighted average.

   a. 2.6 inches (66mm) / R Value 12.7.

6. Dimensional Stability: ASTM D 2126, 2 percent change linear change (7 days).
7. Moisture Vapor Permeance: ASTM E 96, less than 1 perm (57.5ng/ (Pasm2)).
8. Water Absorption: ASTM C 209, less than 0.1 percent by volume.
9. Resistance to Mold: ASTM D 3273 Passed (10).

B. NFPA 285 Exterior Wall Assembly – Steel Stud.

1. Base Wall System: Steel Stud, 1 layer 5/8 inch (16 mm) thick Type X Gypsum wallboard on interior, installed over steel studs: minimum 3-5/8 inches (91 mm) depth, minimum 22 gauge at a maximum of 24 inches (610 mm) o.c. with lateral bracing every 4 foot (1220 mm) vertically.
2. Approved Exterior Finish:

   a. Fiber Cement Board siding.

3. Panel Thickness: 3.7 inches (94 mm) maximum.
4. Stud Cavity: Any non-combustible insulation
5. Exterior Sheathing: 1/2 inch (12.5 mm) thick exterior type gypsum sheathing.
6. Weather Resistive Membrane Applied to Exterior Insulation: Acceptable products are:

   a. VaproShield, WrapShield SA.
   b. Carlisle: Fire Resist 705 VP.
   c. DuPont Tyvek Fluid Applied WB.

C. Panel Fasteners

1. Fasteners shall be approved Hunter Panel fasteners. Fasteners are a corrosion resistant type with oversized heads. Length of fasteners shall be as recommended by the panel manufacturer.

   a. Hunter Panels recommends Hunter SIP SD (Concrete, CMU, Steel Stud) and Hunter SIP WD (Wood)

2.5 VAPOR RETARDERS

A. Reinforced-Polyethylene Vapor Retarders: Two outer layers of polyethylene film laminated to an inner reinforcing layer consisting of either nylon cord or polyester scrim and weighing not less than 25 lb/1000 sq. ft. (12 kg/100 sq. m), with maximum permeance rating of 0.0507 perm (2.9 ng/Pa x s x sq. m).

1. Products: Subject to compliance with requirements, provide one of the following:

   a. Raven Industries Inc.; DURA-SKRIM 6WW.
   b. Reef Industries, Inc.; Griffolyn T-65.

B. Vapor-Retarder Tape: Pressure-sensitive tape of type recommended by vapor-retarder manufacturer for sealing joints and penetrations in vapor retarder.

C. Vapor-Retarder Fasteners: Pancake-head, self-tapping steel drill screws; with fender washers.

D. Single-Component Nonsag Urethane Sealant: ASTM C 920, Type I, Grade NS, Class 25, Use NT related to exposure, and Use O related to vapor-barrier-related substrates.

E. Adhesive for Vapor Retarders: Product recommended by vapor-retarder manufacturer and has demonstrated capability to bond vapor retarders securely to substrates indicated.

2.6 INSULATION FASTENERS

A. Adhesively Attached, Spindle-Type Anchors: Plate welded to projecting spindle; capable of holding insulation of specified thickness securely in position indicated with self-locking washer in place.

1. Products: Subject to compliance with requirements, available products that may be incorporated into the Work include, but are not limited to, the following:

   a. AGM Industries, Inc.; Series T TACTOO Insul-Hangers.
   b. Gemco; Spindle Type.

2. Plate: Perforated, galvanized carbon-steel sheet, 0.030 inch (0.762 mm) thick by 2 inches (50 mm) square.
3. Spindle: Copper-coated, low-carbon steel; fully annealed; 0.105 inch (2.67 mm) in diameter; length to suit depth of insulation indicated.

B. Adhesively Attached, Angle-Shaped, Spindle-Type Anchors: Angle welded to projecting spindle; capable of holding insulation of specified thickness securely in position indicated with self-locking washer in place.

1. Products: Subject to compliance with requirements, available products that may be incorporated into the Work include, but are not limited to, the following:

   a. Gemco; 90-Degree Insulation Hangers.

2. Angle: Formed from 0.030-inch- (0.762-mm-) thick, perforated, galvanized carbon-steel sheet with each leg 2 inches (50 mm) square.
3. Spindle: Copper-coated, low-carbon steel; fully annealed; 0.105 inch (2.67 mm) in diameter; length to suit depth of insulation indicated.

C. Insulation-Retaining Washers: Self-locking washers formed from 0.016-inch- (0.41-mm-) thick galvanized-steel sheet, with beveled edge for increased stiffness, sized as required to hold insulation securely in place, but not less than 1-1/2 inches (38 mm) square or in diameter.

1. Products: Subject to compliance with requirements, available products that may be incorporated into the Work include, but are not limited to, the following:

   a. AGM Industries, Inc.; RC150 or SC150.
   b. Gemco; Dome-Cap, R-150, or S-150.

2. Protect ends with capped self-locking washers incorporating a spring steel insert to ensure permanent retention of cap in the following locations:

   a. Crawl spaces.
   b. Ceiling plenums.
   c. Attic spaces.
   d. Where indicated.

D. Anchor Adhesive: Product with demonstrated capability to bond insulation anchors securely to substrates indicated without damaging insulation, fasteners, and substrates.

1. Products: Subject to compliance with requirements, available products that may be incorporated into the Work include, but are not limited to, the following:

a. AGM Industries, Inc.; TACTOO Adhesive.
b. Gemco; Tuff Bond Hanger Adhesive.

PART 3 - EXECUTION

3.1 PREPARATION

A. Clean substrates of substances that are harmful to insulation or vapor retarders, including removing projections capable of puncturing vapor retarders, or that interfere with insulation attachment.

3.2 INSTALLATION, GENERAL

A. Comply with insulation manufacturer's written instructions applicable to products and applications indicated.

B. Install insulation that is undamaged, dry, and unsoiled and that has not been left exposed to ice, rain, or snow at any time.

C. Extend insulation to envelop entire area to be insulated. Cut and fit tightly around obstructions and fill voids with insulation. Remove projections that interfere with placement.

D. Provide sizes to fit applications indicated and selected from manufacturer's standard thicknesses, widths, and lengths. Apply single layer of insulation units to produce thickness indicated unless multiple layers are otherwise shown or required to make up total thickness.

3.3 INSTALLATION OF INSULATION FOR FRAMED CONSTRUCTION

A. Apply insulation units to substrates by method indicated, complying with manufacturer's written instructions. If no specific method is indicated, bond units to substrate with adhesive or use mechanical anchorage to provide permanent placement and support of units.

B. Glass-Fiber or Mineral-Wool Blanket Insulation: Install in cavities formed by framing members according to the following requirements:

1. Use insulation widths and lengths that fill the cavities formed by framing members. If more than one length is required to fill the cavities, provide lengths that will produce a snug fit between ends.
2. Place insulation in cavities formed by framing members to produce a friction fit between edges of insulation and adjoining framing members.
3. Maintain 3-inch (76-mm) clearance of insulation around recessed lighting fixtures not rated for or protected from contact with insulation.
4. For metal-framed wall cavities where cavity heights exceed 96 inches (2438 mm), support unfaced blankets mechanically and support faced blankets by taping flanges of insulation to flanges of metal studs.
5. Vapor-Retarder-Faced Blankets: Tape joints and ruptures in vapor-retarder facings, and seal each continuous area of insulation to ensure airtight installation.

C. Spray-Applied Insulation: Apply spray-applied insulation according to manufacturer's written instructions. Do not apply insulation until installation of pipes, ducts, conduits, wiring, and electrical outlets in walls is completed and windows, electrical boxes, and other items not indicated to receive insulation are masked. After insulation is applied, make flush with face of studs by using method recommended by insulation manufacturer.

D. Miscellaneous Voids: Install insulation in miscellaneous voids and cavity spaces where required to prevent gaps in insulation using the following materials:

1. Loose-Fill Insulation: Compact to approximately 40 percent of normal maximum volume equaling a density of approximately 2.5 lb/cu. ft. (40 kg/cu. m).
2. Spray Polyurethane Insulation: Apply according to manufacturer's written instructions.

3.4 INSTALLATION OF INSULATION IN CEILINGS FOR SOUND ATTENUATION

A. Where glass-fiber blankets are indicated for sound attenuation above ceilings, install blanket insulation over entire ceiling area in thicknesses indicated. Extend insulation 48 inches (1219 mm) up either side of partitions.

3.5 INSTALLATION OF VAPOR RETARDERS

A. Place vapor retarders on side of construction indicated on Drawings. Extend vapor retarders to extremities of areas to protect from vapor transmission. Secure vapor retarders in place with adhesives or other anchorage system as indicated. Extend vapor retarders to cover miscellaneous voids in insulated substrates, including those filled with loose-fiber insulation.

B. Seal vertical joints in vapor retarders over framing by lapping no fewer than two studs.

1. Fasten vapor retarders to wood framing at top, end, and bottom edges; at perimeter of wall openings; and at lap joints. Space fasteners 16 inches (406 mm) o.c.
2. Before installing vapor retarders, apply urethane sealant to flanges of metal framing including runner tracks, metal studs, and framing around door and window openings. Seal overlapping joints in vapor retarders with vapor-retarder tape according to vapor-retarder manufacturer's written instructions. Seal butt joints with vapor-retarder tape. Locate all joints over framing members or other solid substrates.
3. Firmly attach vapor retarders to metal framing and solid substrates with vapor-retarder fasteners as recommended by vapor-retarder manufacturer.

C. Seal joints caused by pipes, conduits, electrical boxes, and similar items penetrating vapor retarders with vapor-retarder tape to create an airtight seal between penetrating objects and vapor retarders.

D. Repair tears or punctures in vapor retarders immediately before concealment by other work. Cover with vapor-retarder tape or another layer of vapor retarders.

3.6 PROTECTION

A. Protect installed insulation and vapor retarders from damage due to harmful weather exposures, physical abuse, and other causes. Provide temporary coverings or enclosures where insulation is subject to abuse and cannot be concealed and protected by permanent construction immediately after installation.

END OF SECTION 072100

SECTION 072110 – INSULATING AIR BARRIER SYSTEM

PART 1 - GENERAL

1.1 SUMMARY

A. This section includes the following:

1. Materials and installation methods for a spray polyurethane foam building insulation and air/vapor barrier system located in the non-accessible part of the wall.
2. SRAB (sheet rubberized-asphalt barrier) self-adhered air/vapor barrier membrane in roof assemblies.
3. Materials and installation to bridge and seal the following air leakage pathways and gaps:

    a. Connections of the walls to the roof air barrier.
    b. Connections of the walls to the foundations.
    c. Seismic and expansion joints.
    d. Openings and penetrations of window frames, store front, curtain wall.
    e. Barrier precast concrete and other envelope systems.
    f. Door frames.
    g. Piping, conduit, duct and similar penetrations
    h. Masonry ties, screws, bolts and similar penetrations.
    i. All other air leakage pathways in the building envelope.

4. Materials to act as flashings and counterflashings.

B. RELATED SECTIONS

1. Section 033000 - Cast-In-Place Concretes for Concrete back-up walls and underslab vapor retarder.
2. Section 042000 - Unit Masonry for backup walls and Masonry veneer cavity walls.
5. Section 072100 - Building Insulation: Insulation with integral vapor retarder facing.
6. Section 076200 - Sheet Metal Flashing and Trim: Sheet metal flashings.

1.2 PERFORMANCE REQUIREMENTS

A. Provide air/vapor barrier system constructed to perform as a continuous air/vapor barrier system, as building thermal insulation, and as a liquid water drainage plane flashed to discharge to the exterior any incidental condensation or water penetration. System shall accommodate movements of building materials by providing expansion and control joints as required, with accessory air seal materials at such locations, changes in substrate and perimeter conditions.

1.3 SUBMITTALS

A. Provide submittals in accordance with Section 013300.

1. Submit evidence of licensing and certification under the Air Barrier Association of America's (ABAA's) Quality Assurance Program.
2. Submit shop drawings showing locations and extent of air/vapor barrier and details of all typical conditions, intersections with other envelope systems and materials, membrane flashings and counter-flashings, and details showing how gaps in the construction will be

bridged, how inside and outside corners are negotiated and how miscellaneous penetrations such as conduits, pipes electric boxes and the like are sealed.

3. Submit manufacturer's product data sheets for each type of material, including manufacturer's printed instructions for evaluating, preparing, and treating substrate, temperature and other limitations of installation conditions, technical data, and tested physical and performance properties.
4. Submit manufacturer's installation instructions.
5. Provide evidence of testing by an accredited laboratory confirming material has been tested and conforms to the requirements of ASTM E2178, Standard for Air Barrier Materials.
6. Certification by air/vapor barrier manufacturer that products supplied comply with local regulations controlling use of volatile organic compounds (VOCs).
7. Certification of compatibility by air/vapor barrier manufacturer, listing all materials on the project that it connects to or that come in contact with it.
8. Submit two samples, 12 by 12 inch (300 by 300 mm) minimum size, of each air/vapor barrier material required for Project.
9. Submit test results of air permeability testing of primary air barrier material (ASTM E 2178-01)
10. Submit test results of assembly in accordance with ABAA test protocol.

1.4 QUALITY ASSURANCE

A. Installer Qualifications:

1. The air barrier contractor shall be, during the bidding period as well as for the duration of the installation, officially recognized as a Licensed Contractor by the Air Barrier Association of America (ABAA). The contractor shall carry liability insurance and bonding.
2. Each worker who is installing air barriers must be either a Certified Applicator or an installer who is registered with ABAA
3. Air/vapor barrier installers must be trained and certified by ABAA/NECA (National Energy Conservation Association) and PSDI (Professional Skills Development Institute for energy conservation) in accordance with the training requirements outlined in the ULC S705.2-02 Installation Standard. Installers shall have their photo-identification certification cards in their possession and available on the project site, for inspection upon request.

B. Single-Source Responsibility: Obtain air/vapor barrier materials from a single manufacturer regularly engaged in manufacturing the product.

C. Provide products which comply with all state and local regulations controlling use of volatile organic compounds (VOCs).

D. Preconstruction Meeting: Convene week prior to commencing Work of this section, in accordance with Section - Project Meetings.

E. Field-Constructed Mock-Ups: Prior to installation of air/vapor barrier, apply air/vapor barrier as follows to verify details under shop drawing submittals and to demonstrate tie-ins with adjoining construction, and other termination conditions, as well as qualities of materials and execution:

1. Apply air/vapor barrier in field-constructed mock-ups of assemblies specified in Section 04200 and Section 09253.
2. Apply air/vapor barrier in field-constructed mock-ups of assemblies specified in Section 01452, “Mock-Ups”.
3. Construct typical exterior wall panel, 8 feet long by 8 feet wide, incorporating back-up wall, partial cladding, window and doorframe and sill, insulation, flashing, building corner condition, junction with roof system foundation wall and typical penetrations and gaps;

illustrating materials interface and seals. All transition membranes and seals shall be installed per the manufacturer's system requirements.

F. Test mock-up for air and water infiltration to conform with Section 01400 - Quality Control, in accordance with ASTM E 783 and ASTM E1105.

G. Cooperate and coordinate with the Owner's inspection and testing agency. Do not cover any installed air and vapor barrier unless it has been inspected, tested and approved.

H. Protect people and materials from over-spray and contact with chemicals and gases.

1.5 DELIVERY, STORAGE, AND HANDLING

A. Deliver materials to Project site in original packages with seals unbroken, labeled with manufacturer's name, product, date of manufacture, expiration date, and directions for storage.

B. Store materials in their original undamaged packages in a clean, dry, protected location and within temperature range required by air/vapor barrier manufacturer. Protect stored materials from direct sunlight.

C. Avoid spillage. Immediately notify Owner and Construction Manager if spillage occurs and start clean up procedures.

D. Clean spills and leave area as it was prior to spill.

E. Separate and recycle waste materials in accordance with Section, and with the Waste Reduction Workplan.

F. Place materials defined as hazardous or toxic waste in designated containers.

G. Ensure emptied containers are sealed and stored safely for disposal away from children.

1.6 PROJECT CONDITIONS

A. Environmental Conditions: Apply air/vapor barrier within range of ambient and substrate temperatures recommended by air/vapor barrier manufacturer. Do not apply air/vapor barrier to a damp or wet substrate, unless the manufacturer specifically permits that for the product.

1. Do not apply air/vapor barrier in snow, rain, fog, or mist.
2. Do not apply air/vapor barrier when the temperature of substrate surfaces and surrounding air temperatures are below those recommended by the manufacturer.
3. The product shall not be installed after the expiry date printed on the label of each container. The product has a shelf life of 6 months from the date of manufacture.

1.7 WARRANTY

A. For sealant and membrane materials provide a 24 month warranty period.

B. Material Warranty: Provide the manufacturer's three year air/vapor barrier material warranty under provisions of Section.

C. System Warranty: Provide the manufacturer's three year system warranty, including the primary air/vapor barrier and installed accessory sealant and membrane materials which fail to achieve air tight and watertight seal, exhibit loss of adhesion or cohesion, or do not cure.

PART 2 - PRODUCTS

2.1 MATERIALS & MANUFACTURERS

A. Sprayed polyurethane foam air barrier wall systems are manufactured on the jobsite by trained, certified contractor manufacturers. The Contractor, Manufacturer must be certified by the Air Barrier Association of America (ABAA) and provide trained certified mechanics with a demonstrated ability to manufacture air barrier system on project of similar size, scope and complexity.

Bob McFadden
Bel Air Foamed Insulation, Inc.
2133 N. Fountain Green Road
Bel Air, MD 21015
(410)838-5900
FAX (410)879-0287

Landon Royals
Royals Insulation
212-A Najoles Road
Millersville, MD 21108
(410) 729-0405
Fax (410) 729-0825

Temple Chappell
Procoat Applicators
PO Box 4366
Annapolis, MD 21403
(410)626-1546
Fax (410)295-6576
spfspec@aol.com

Bonnie Strickler
PUFF Inc.
1851 Gleco Mills Lane
Charlottesville, VA 22903
(434)977-0427
(434)977-0428
suzie@puffinc.com

1. Sprayed polyurethane foam material, when tested, shall meet the requirements of ULC S705.1-01 Standard for Thermal Insulation-Spray Applied Rigid Polyurethane Foam, Medium Density, Material- Specification.
2. A copy of an Evaluation Report (such as the CCMC Evaluation Report) or copies of the test reports from an accredited testing laboratory, for each physical property, indicating that the product meets the requirements of ULC S705.1-01 shall be made available upon request. A copy of either the evaluation report or the test reports shall be on file at the ABAA office.
3. Material containers shall be labeled with the Evaluation Report number of the evaluation agency.
4. Design R value as indicated in test report; minimum R6/inch.
5. Density as indicated in test report: 1.9 pounds per cubic foot.
6. Smoke development as indicated in test report ASTM E84-04; Flame spread index 25, Smoke Developed 400 orless tested at 3” thickness
7. Products that meet the preceding requirements:

    a. BASF Walltite® performance properties are used as the design standard or equal

B. AUXILIARY MATERIALS

1. Furnish auxiliary materials recommended by air/vapor barrier manufacturer for intended use and compatible with the air/vapor barrier.

2. Self-adhering modified asphalt/polyethylene flashing to counterflash metal flashings:

    a. Bakor Blueskin® TWF.

3. Primer: Water based liquid primer for concrete, masonry, gypsum sheathing, wood, metal, and painted substrates;

a. Aquatac® as manufactured by Bakor Inc.

4. Primer: Solvent based, VOC compliant primer for concrete, masonry, gypsum sheathing, wood, metal, and painted substrates;

   a. Blueskin® Primer by Bakor, Inc.

5. Mastic, Adhesives, and Tape: Liquid mastic and adhesives, and adhesive tapes by SRAB air/vapor barrier manufacturer.

6. Stainless-Steel Sheet Flashing: ASTM A167, Type 304, soft annealed, with No. 2D finish; minimum, 0.0156 inch (0.4 mm) thick.

7. Transition Strip: Self-adhering, smooth surfaced SBS modified bitumen membrane, nominal 40 mil thickness, width as required.

   a. Blueskin® SA as manufactured by Bakor Inc

8. Transition Strip Primer:

   a. Blueskin® Primer as manufactured by Bakor Inc.

9. Sheet Membrane Transition Strip Termination Sealant:

   a. Polybitume 570-05 by Bakor Inc.

10. Sheet Membrane Air Barrier Perimeter Seal to Windows, Doors, Curtainwall and Storefront systems: Non-reinforced, cured chloroprene polymer sheet (neoprene) complying with ASTM D2000 Designation 2BC415 to 3BC620, 50 to 65 mils (1.3 to 1.6 mm) thick.

    a. Adhesive: Typical contact-type adhesive used for fully-adhered membranes.
    b. Lap Sealant: Typical urethane or silicone lap and termination sealant used for membrane edges recommended by manufacturer.
    c. Termination bars and fasteners:
       1) Stainless steel, Aluminum bars, and stainless fasteners Galvanized steel.

11. Sheet Membrane Sheet Membrane Air Barrier Perimeter Seal to Windows, Doors, Curtainwall and Storefront systems: Low modulus silicone sheet; provide manufacturer's standard system consisting of precured low-modulus silicone extrusion, in sizes to fit widths indicated, combined with a neutral-curing low modulus silicone sealant for bonding extrusions to substrates.

    1. Pecora Sil-Span.
    2. Dow 1-2-3 or equal.

12. Provide sealants in accordance with Section 07900 - Joint Sealers. Comply with ASTM C920 and ASTM C920 classifications for type, grade, class, and uses

    a. Silicone Sealant Type A: natural cure, low modulus, to seal sheet membrane flashing to polyethylene face of sheet rubberized-asphalt barrier and to seal between and to non-bituminous sheet systems.

       1) Acceptable materials:
          a) Dow 790

b) Pecora 864

2) SPF (Sprayed Polyurethane Foam) Sealant: Provide one- or two-component, foamed-in-place, polyurethane foam sealant with the following characteristics:
   a) Density: 1.5 to 2.0 PCF.
   b) Flame Spread (ASTM E162): 25 or less.
   c) Initial R-Value (at 1 inch): Not less than 7. Acceptable materials:
      - Zerodraft Foam Sealant.
      - Zerodraft Insulating Air Sealant
      Zerodraft (Division of Canam Building Envelope Specialists Inc.), 125 Traders Blvd. E., Unit # 4, Mississauga, ON, L4Z 2H3 Tel. 1-877-272-2626

3. Substrate Cleaner: Non-corrosive type recommended by sealant manufacturer compatible with adjacent materials.

C. EQUIPMENT

1. The equipment used to spray the polyurethane foam material shall be in accordance with ULC S705.2-02 and the equipment manufacturer's recommendations for specific type of application.
2. Equipment settings are to be recorded on the Daily Work Record as required by the ULC S705.2-02 Installation standard.
3. Each proportioner unit to supply only one spray gun.

PART 3 - EXECUTION

3.1 EXAMINATION

A. Examine substrates, areas, and conditions under which air/vapor barrier systems will be applied, with Installer present, for compliance with requirements. Verify that surfaces and conditions are suitable prior to commencing work of this section. Do not proceed with installation until unsatisfactory conditions have been corrected.

1. Do not proceed with installation until after minimum concrete curing period recommended by air/vapor barrier manufacturer.

2. Ensure that:

   a. surfaces are sound, dry, even, and free of oil, grease, dirt, excess mortar or other contaminants
   b. concrete surfaces are cured and dry, smooth without large voids, spalled areas or sharp protrusions.
   c. masonry joints are flush and completely filled with mortar, and all excess mortar sitting on masonry ties has been removed.

3. Verify substrate is visibly dry and free of moisture. Test for capillary moisture by plastic sheet method according to ASTM D4263.
4. Notify Architect in writing of anticipated problems using air/vapor barrier over substrate.

3.2 SURFACE PREPARATION

A. Clean, prepare, and treat substrate according to manufacturer's written instructions. Provide clean, dust-free, and dry substrate for air/vapor barrier application.

B. Prime masonry, concrete substrates with conditioning primer when installing modified asphalt membrane transition membranes.

C. Prime glass-fiber surfaced gypsum sheathing an adequate number of coats to achieve required bond to transition membranes, with adequate drying time between coats.

D. Prime wood, metal, and painted substrates with primer recommended by membrane manufacturer.

E. Prepare, treat, and seal vertical and horizontal surfaces at terminations and penetrations through air/vapor barrier and at protrusions according to air/vapor barrier manufacturer's written instructions and approved tested system in accordance with ABAA air barrier testing protocol.

1. Verify that surfaces and conditions are suitable to accept work as outlined in this section.
2. Prior to commencement of work report in writing to the architect any defects in surfaces or conditions that may adversely affect the performance of products installed under this section.
3. Commencement of work outlined in this section shall be deemed as acceptance of existing work and conditions.
4. Examine joints before sealing to ensure configurations, surfaces and widths are suitable for spray polyurethane foam. Report in writing all defects stating the locations of joints deemed unacceptable for the application of the spray polyurethane foam.

3.3 PREPARATION

A. Protection:

1. Mask and cover adjacent areas to protect from over spray.
2. Ensure any required foam stop or back up material are in place to prevent over spray and achieve complete seal.
3. Seal off existing ventilation equipment. Install temporary ducting and fans to ensure exhaust fumes. Provide for make-up air.
4. Erect barriers, isolate area and post warning signs to advise non-protected personnel to avoid the spray area.

B. Surface Preparation

1. Surfaces to receive foam insulation shall be clean, dry and properly fastened to ensure adhesion of the polyurethane foam to the substrate.
2. Ensure that all work by other trades that may penetrate through the air barrier system is in place and complete.
3. Ensure that surface preparation and any primers required conform to the manufacturer’s instructions.
4. Prepare surfaces by brushing, scrubbing. Scraping, or grinding to remove loose mortar, dust, oil, grease, oxidation, mill scale and other contaminants which will affect adhesion and integrity of the spray polyurethane foam. Wipe down metal surfaces to remove release agents or other non-compatible coatings, using clean sponges or rags soaked in a solvent compatible with the spray polyurethane foam. Ensure surfaces are dry before proceeding.
5. Install transition membranes to all applicable surfaces and ensure proper adhesion of the transition membranes to the substrate, capable of having spray polyurethane foam insulation.

6. Install counter-flashings”

a. Metal: Mechanically fasten metal counter-flashings with screws at 8” (200 mm) o.c.
b. Membrane: Cut into and uncover only 3” of siliconized release paper along one edge of the counter-flashing membrane. Adhere membrane flashing to the pre-primed substrate a minimum of 3” and roll firmly in place.

7. Ensure veneer anchors are in place.

C. APPLICATION:

1. Spray-application of polyurethane foam shall be installed in accordance with ULC S705.2-02 and the manufacturer’s instructions.
2. Apply only when surfaces and environmental conditions are within limits prescribed by the material manufacturer and the ULC S705.2 Installation standard.
3. Apply in consecutive passes as recommended by manufacturer to thickness as indicated on drawings. Passes shall be not less than ½ inch and not greater than 2 inches.
4. Do not install spray polyurethane foam within 3 inches of heat emitting devices such as light fixtures and chimneys.
5. Finished surface of foam insulation to be free of voids and embedded foreign objects.
6. Remove masking materials and over spray from adjacent areas immediately after foam surface has hardened. Ensure cleaning methods do not damage work performed by other sections.
7. Trim, as required, any excess thickness that would interfere with the application of cladding/covering system by other trades.
8. Clean and restore surfaces soiled or damaged by work of the section. Consult with section of work soiled before cleaning to ensure methods used will not damage the work.
9. Do not permit adjacent work to be damaged by work of this section. Damage to work of this section caused by other sections shall be repaired by this section at the expense of the subcontractor causing the damage.
10. Complete connections to other components or repair any gaps, holes or other damage using material which conforms to ULC S710.1 Polyurethane Sealant Foam – One Component – Material or ULC S711.1 Polyurethane Sealant Foam – Two Components – Material and shall be installed in accordance with ULC S710.2 Polyurethane Sealant Foam – One component – Installation or ULC S711.2 Polyurethane Sealant Foam – Two Component – Installation, whichever is appropriate.

D. FIELD QUALITY CONTROL

1. Site Tests
   a. The Licensed Installer shall conduct daily visual inspection, adhesion/cohesion testing and density measurements as outlined by the ULC S705.2-02 Installation standard.
   b. The Licensed Installer shall complete the Daily Work Record and record all information required including the results of the testing. The Daily Work Record shall be kept on site for routine inspection. Copies of the Daily Work Record shall be forwarded to the owner or owner’s representative upon request. Copies of the Daily Work Record or monthly summaries shall be sent to the ABAA office on a monthly basis as required by the Quality Assurance Program.
   c. Transition membranes shall be pull tested in accordance with the ABAA Quality Assurance Program requirements before installing the spray polyurethane air barrier material.
   d. The costs incurred for daily testing and inspection by the Licensed Installer and the completion of the Daily Work Record shall be borne by the Licensed Contractor.

2. Inspection

a. Arrange for site inspections by ABAA. The cost of inspections shall be included in the bid provided by the Licensed Contractor.
b. The ABAA site-inspections shall verify conformance with the manufacturer's instructions, the standard ULC S705.2-02 Installation standard, the ABAA Quality Assurance Program, and this section of the project specification.
c. Inspections and testing shall be carried out at 5%, 50% and 95% of completion. A written inspection report shall be forwarded to the architect, the owner's representative, the Contractor, and the ABAA-licensed installer within 3 working days of the inspection and test being performed. In the case of any deficiencies, the ABAA-licensed inspector may verbally advise the licensed installer at the time of the inspection.
d. If the inspection reveals any defects, the Licensed Contractor shall immediately rectify all such defects at his cost.

E. TOLERANCES

1. Maximum variation from indicated thickness: minus (-) ¼ inch; plus (+) ½ inch.

F. PROTECTION

1. Protect the spray polyurethane foam from ultraviolet radiation when installed on the exterior of a building.
2. Cover the spray polyurethane foam with a thermal barrier when installed on the interior of the building.

END OF SECTION 072110

SECTION 073113 - ASPHALT SHINGLES

PART 1 - GENERAL

1.1 RELATED DOCUMENTS

A. Drawings and general provisions of the Contract, including General and Supplementary Conditions and Division 01 Specification Sections, apply to this Section.

1.2 SUMMARY

A. Section Includes:

1. Asphalt shingles.
2. Underlayment.

1.3 DEFINITION

A. Roofing Terminology: See ASTM D 1079 and glossary of NRCA's "The NRCA Roofing and Waterproofing Manual" for definitions of terms related to roofing work in this Section.

1.4 ACTION SUBMITTALS

A. Product Data: For each type of product indicated.

B. Samples for Initial Selection: For each type of asphalt shingle indicated.

1. Include similar Samples of trim and accessories involving color selection.

C. Samples for Verification: For the following products, of sizes indicated, to verify color selected:

1. Asphalt Shingle: Full size.
2. Ridge and Hip Cap Shingles: Full size.
3. Ridge Vent: 12-inch- (300-mm-) long Sample.
4. Self-Adhering Underlayment: 12 inches (300 mm) square.

1.5 INFORMATIONAL SUBMITTALS

A. Qualification Data: For qualified Installer.

B. Product Test Reports: Based on evaluation of comprehensive tests performed by manufacturer and witnessed by a qualified testing agency, for asphalt shingles.

C. Research/Evaluation Reports: For each type of asphalt shingle required, from the ICC.

D. Warranties: Sample of special warranties.

1.6 CLOSEOUT SUBMITTALS

A. Maintenance Data: For each type of asphalt shingle to include in maintenance manuals.

1.7 MAINTENANCE MATERIAL SUBMITTALS

A. Furnish extra materials that match products installed and that are packaged with protective covering for storage and identified with labels describing contents.

1. Asphalt Shingles: 100 sq. ft (9.3 sq. m) of each type, in unbroken bundles.

1.8 QUALITY ASSURANCE

A. Installer Qualifications: Manufacturer's authorized representative who is trained and approved for installation of units required for this Project.

B. Source Limitations: Obtain ridge and hip cap shingles ridge vents and self-adhering sheet underlayment from single source from single manufacturer.

C. Fire-Resistance Characteristics: Where indicated, provide asphalt shingles and related roofing materials identical to those of assemblies tested for fire resistance per test method below by UL or another testing and inspecting agency acceptable to authorities having jurisdiction. Identify products with appropriate markings of applicable testing agency.

1. Exterior Fire-Test Exposure: Class A; ASTM E 108 or UL 790, for application and roof slopes indicated.

D. Preinstallation Conference: Conduct conference at Project site.

1.9 DELIVERY, STORAGE, AND HANDLING

A. Store roofing materials in a dry, well-ventilated, weathertight location according to asphalt shingle manufacturer's written instructions. Store underlayment rolls on end on pallets or other raised surfaces. Do not double stack rolls.

1. Handle, store, and place roofing materials in a manner to avoid significant or permanent damage to roof deck or structural supporting members.

B. Protect unused underlayment from weather, sunlight, and moisture when left overnight or when roofing work is not in progress.

1.10 PROJECT CONDITIONS

A. Environmental Limitations: Do not deliver or install asphalt shingles until spaces are enclosed and weathertight, wet work in spaces is complete and dry, and temporary HVAC system is operating and maintaining ambient temperature and humidity conditions at occupancy levels during the remainder of the construction period.

1. Install self-adhering sheet underlayment within the range of ambient and substrate temperatures recommended by manufacturer.

1.11 WARRANTY

A. Special Warranty: Standard form in which manufacturer agrees to repair or replace asphalt shingles that fail in materials or workmanship within specified warranty period.

1. Failures include, but are not limited to, the following:

a. Manufacturing defects.
b. Structural failures including failure of asphalt shingles to self-seal after a reasonable time.

2. Material Warranty Period: 50 years from date of Substantial Completion, prorated, with first 10 years nonprorated.
3. Wind-Speed Warranty Period: Asphalt shingles will resist blow-off or damage caused by wind speeds up to 100 mph (45 m/s) for 15 years from date of Substantial Completion.
4. Algae-Discoloration Warranty Period: Asphalt shingles will not discolor 15 years from date of Substantial Completion.
5. Workmanship Warranty Period: 10 years from date of Substantial Completion.

B. Special Project Warranty: Roofing Installer's Warranty, or warranty form at end of this Section, signed by roofing Installer, covering the Work of this Section, in which roofing Installer agrees to repair or replace components of asphalt shingle roofing that fail in materials or workmanship within specified warranty period.

1. Warranty Period: Two years from date of Substantial Completion.

PART 2 - PRODUCTS

2.1 GLASS-FIBER-REINFORCED ASPHALT SHINGLES

A. Multitab-Strip Asphalt Shingles: ASTM D 3462, glass-fiber reinforced, mineral-granule surfaced, and self-sealing.

1. Basis-of-Design Product: Subject to compliance with requirements, provide Certainteed Corporation; Independence or comparable product by one of the following:

a. GAF Materials Corporation.
b. IKO.
c. Malarkey Roofing Products.
d. Owens Corning.

2. Tab Arrangement: Three tabs, randomly spaced.
3. Strip Size: Manufacturer's standard.
4. Algae Resistance: Granules treated to resist algae discoloration.
5. Color and Blends: As selected by Architect from manufacturer's full range.

B. Hip and Ridge Shingles: Manufacturer's standard units to match asphalt shingles.

2.2 UNDERLAYMENT MATERIALS

A. Self-Adhering Sheet Underlayment, Granular Surfaced: ASTM D 1970, minimum of 55-mil- (1.4-mm-) thick sheet; glass-fiber-mat-reinforced, SBS-modified asphalt; mineral-granule surfaced; with release paper backing; cold applied.

1. Manufacturers: Subject to compliance with requirements, provide products by one of the following:

   a. Carlisle Coatings & Waterproofing, Inc.
   b. CertainTeed Corporation.
   c. GAF Materials Corporation.
   d. Henry Company.
   e. IKO.
   f. Johns Manville.
   g. Owens Corning.

2. Provide product recommended in writing by shingle manufacturer.

2.3 ACCESSORIES

A. Asphalt Roofing Cement: ASTM D 4586, Type II, asbestos free.

B. Roofing Nails: ASTM F 1667; aluminum, stainless-steel, copper, or hot-dip galvanized-steel wire shingle nails, minimum 0.120-inch- (3-mm-) diameter, barbed or smooth shank as required by manufacturer, sharp-pointed, with a minimum 3/8-inch- (9.5-mm-) diameter flat head and of sufficient length to penetrate 3/4 inch (19 mm) into solid wood decking or extend at least 1/8 inch (3 mm) through OSB or plywood sheathing.

   1. Where nails are in contact with metal flashing, use nails made from same metal as flashing.

2.4 METAL FLASHING AND TRIM

A. General: Comply with requirements in Section 076200 "Sheet Metal Flashing and Trim."

   1. Sheet Metal: Aluminum, prefinished.

B. Fabricate sheet metal flashing and trim to comply with recommendations in SMACNA's "Architectural Sheet Metal Manual" that apply to design, dimensions, metal, and other characteristics of the item.

   1. Apron Flashings: Fabricate with lower flange a minimum of 4 inches (100 mm) over and 4 inches (100 mm) beyond each side of downslope asphalt shingles and 6 inches (150 mm) up the vertical surface.
   2. Step Flashings: Fabricate with a headlap of 2 inches (50 mm) and a minimum extension of 4 inches (100 mm) over the underlying asphalt shingle and up the vertical surface.
   3. Drip Edges: Fabricate in lengths not exceeding 10 feet (3 m) with 2-inch (50-mm) roof-deck flange and 1-1/2-inch (38-mm) fascia flange with 3/8-inch (9.6-mm) drip at lower edge.

C. Vent Pipe Flashings: ASTM B 749, Type L51121, at least 1/16 inch (1.6 mm) thick. Provide lead sleeve sized to slip over and turn down into pipe, soldered to skirt at slope of roof, and extending at least 4 inches (100 mm) from pipe onto roof.

2.5 RIDGE AND HIP VENTS

A. Rigid Ridge and Hip Vents: Manufacturer's standard, rigid section high-density polypropylene or other UV-stabilized plastic ridge vent with external deflector baffles; for use under ridge shingles.

1. Basis-of-Design Products: Subject to compliance with requirements, provide Air Vent, Inc.; Shingle Vent II and Hip Ridge Vent or comparable product by one of the following:

    a. Cor-A-Vent, Inc.
    b. GAF Materials Corporation.
    c. Mid-America Building Products.
    d. Obdyke, Benjamin Incorporated.
    e. Owens Corning.
    f. Quarrix Building Products.
    g. RGM Products, Inc.

2. Minimum Net Free Area: 12” per foot.

PART 3 - EXECUTION

3.1 EXAMINATION

A. Examine substrates, areas, and conditions, with Installer present, for compliance with requirements for installation tolerances and other conditions affecting performance of the Work.

    1. Examine roof sheathing to verify that sheathing joints are supported by framing and blocking or metal clips and that installation is within flatness tolerances.
    2. Verify that substrate is sound, dry, smooth, clean, sloped for drainage, and completely anchored; and that provision has been made for flashings and penetrations through asphalt shingles.

B. Prepare written report, endorsed by Installer, listing conditions detrimental to performance of the Work.

C. Proceed with installation only after unsatisfactory conditions have been corrected.

3.2 UNDERLAYMENT INSTALLATION

A. General: Comply with underlayment manufacturer's written installation instructions applicable to products and applications indicated unless more stringent requirements apply.

B. Self-Adhering Sheet Underlayment: Install, wrinkle free, on roof deck. Comply with low-temperature installation restrictions of underlayment manufacturer if applicable. Install at entire roof surface, lapped in direction to shed water. Lap sides not less than 3-1/2 inches (89 mm). Lap ends not less than 6 inches (150 mm) staggered 24 inches (600 mm) between courses. Roll laps with roller. Cover underlayment within seven days.

3.3 METAL FLASHING INSTALLATION

A. General: Install metal flashings and other sheet metal to comply with requirements in Section 076200 "Sheet Metal Flashing and Trim."

    1. Install metal flashings according to recommendations in ARMA's "Residential Asphalt Roofing Manual" and asphalt shingle recommendations in NRCA's "The NRCA Roofing and Waterproofing Manual."

B. Apron Flashings: Extend lower flange over and beyond each side of downslope asphalt shingles and up the vertical surface.

C. Step Flashings: Install with a headlap of 2 inches (50 mm) and extend over the underlying asphalt shingle and up the vertical surface. Fasten to roof deck only.

D. Rake Drip Edges: Install rake drip edge flashings over underlayment and fasten to roof deck.

E. Eave Drip Edges: Install eave drip edge flashings below underlayment and fasten to roof sheathing.

F. Pipe Flashings: Form flashing around pipe penetrations and asphalt shingles. Fasten and seal to asphalt shingles as recommended by manufacturer.

3.4 ASPHALT SHINGLE INSTALLATION

A. General: Install asphalt shingles according to manufacturer's written instructions, recommendations in ARMA's "Residential Asphalt Roofing Manual," and asphalt shingle recommendations in NRCA's "The NRCA Roofing and Waterproofing Manual."

B. Install starter strip along lowest roof edge, consisting of an asphalt shingle strip with tabs removed at least 7 inches (175 mm) wide with self-sealing strip face up at roof edge.

1. Extend asphalt shingles 1/2 inch (13 mm) over fasciae at eaves and rakes.
2. Install starter strip along rake edge.

C. Install first and remaining courses of asphalt shingles stair-stepping diagonally across roof deck with manufacturer's recommended offset pattern at succeeding courses, maintaining uniform exposure.

D. Fasten asphalt shingle strips with a minimum of four roofing nails located according to manufacturer's written instructions.

1. Where roof slope is less than 4:12, seal asphalt shingles with asphalt roofing cement spots.
2. When ambient temperature during installation is below 50 deg F (10 deg C), seal asphalt shingles with asphalt roofing cement spots.

E. Closed-Cut Valleys: Extend asphalt shingle strips from one side of valley 12 inches (300 mm) beyond center of valley. Use one-piece shingle strips without joints in valley. Fasten with extra nail in upper end of shingle. Install asphalt shingle courses from other side of valley and cut back to a straight line 2 inches (50 mm) short of valley centerline. Trim upper concealed corners of cut-back shingle strips.

1. Do not nail asphalt shingles within 6 inches (150 mm) of valley center.
2. Set trimmed, concealed-corner asphalt shingles in a 3-inch- (75-mm-) wide bed of asphalt roofing cement.

F. Ridge Vents: Install continuous ridge vents over asphalt shingles according to manufacturer's written instructions. Fasten with roofing nails of sufficient length to penetrate sheathing.

G. Ridge and Hip Cap Shingles: Maintain same exposure of cap shingles as roofing shingle exposure. Lap cap shingles at ridges to shed water away from direction of prevailing winds. Fasten with roofing nails of sufficient length to penetrate sheathing.

1. Fasten ridge cap asphalt shingles to cover ridge vent without obstructing airflow.

3.5 ROOFING INSTALLER'S WARRANTY

A. WHEREAS <**Insert name**> of <**Insert address**>, herein called the "Roofing Installer," has performed roofing and associated work ("work") on the following project:

1. Owner: Indian River School District.
2. Address: 31 Hosier St., Selbyville, DE 19975.
3. Building Name/Type: East Millsboro Elementary School.
4. Address: 29346 Iron Branch Rd. Millsboro, DE 19966.
5. Area of Work: <**Insert information**>.
6. Acceptance Date: <**Insert date**>.
7. Warranty Period: <**Insert time**>.
8. Expiration Date: <**Insert date**>.

B. AND WHEREAS Roofing Installer has contracted (either directly with Owner or indirectly as a subcontractor) to warrant said work against leaks and faulty or defective materials and workmanship for designated Warranty Period,

C. NOW THEREFORE Roofing Installer hereby warrants, subject to terms and conditions herein set forth, that during Warranty Period he will, at his own cost and expense, make or cause to be made such repairs to or replacements of said work as are necessary to correct faulty and defective work and as are necessary to maintain said work in a watertight condition.

D. This Warranty is made subject to the following terms and conditions:

1. Specifically excluded from this Warranty are damages to work and other parts of the building, and to building contents, caused by:

   a. Lightning;
   b. Peak gust wind speed exceeding <**Insert wind speed**> mph (m/sec);
   c. Fire;
   d. Failure of roofing system substrate, including cracking, settlement, excessive deflection, deterioration, and decomposition;
   e. Faulty construction of parapet walls, copings, chimneys, skylights, vents, equipment supports, and other edge conditions and penetrations of the work;
   f. Vapor condensation on bottom of roofing; and
   g. Activity on roofing by others, including construction contractors, maintenance personnel, other persons, and animals, whether authorized or unauthorized by Owner.

2. When work has been damaged by any of foregoing causes, Warranty shall be null and void until such damage has been repaired by Roofing Installer and until cost and expense thereof have been paid by Owner or by another responsible party so designated.
3. Roofing Installer is responsible for damage to work covered by this Warranty but is not liable for consequential damages to building or building contents resulting from leaks or faults or defects of work.
4. During Warranty Period, if Owner allows alteration of work by anyone other than Roofing Installer, including cutting, patching, and maintenance in connection with penetrations, attachment of other work, and positioning of anything on roof, this Warranty shall become null and void on date of said alterations, but only to the extent said alterations affect work covered by this Warranty. If Owner engages Roofing Installer to perform said alterations, Warranty shall not become null and void unless Roofing Installer, before starting said work, shall have notified Owner in writing, showing reasonable cause for claim, that said alterations would likely damage or deteriorate work, thereby reasonably justifying a limitation or termination of this Warranty.
5. During Warranty Period, if original use of roof is changed and it becomes used for, but was not originally specified for, a promenade, work deck, spray-cooled surface, flooded basin, or other use

or service more severe than originally specified, this Warranty shall become null and void on date of said change, but only to the extent said change affects work covered by this Warranty.

6. Owner shall promptly notify Roofing Installer of observed, known, or suspected leaks, defects, or deterioration and shall afford reasonable opportunity for Roofing Installer to inspect work and to examine evidence of such leaks, defects, or deterioration.
7. This Warranty is recognized to be the only warranty of Roofing Installer on said work and shall not operate to restrict or cut off Owner from other remedies and resources lawfully available to Owner in cases of roofing failure. Specifically, this Warranty shall not operate to relieve Roofing Installer of responsibility for performance of original work according to requirements of the Contract Documents, regardless of whether Contract was a contract directly with Owner or a subcontract with Owner's General Contractor.

E. IN WITNESS THEREOF, this instrument has been duly executed this <**Insert day**> day of <**Insert month**>, <**Insert year**>.

1. Authorized Signature: <**Insert signature**>.
2. Name: <**Insert name**>.
3. Title: <**Insert title**>.

END OF SECTION 073113

SECTION 074646 - FIBER-CEMENT SIDING

PART 1 - GENERAL

1.1 RELATED DOCUMENTS

A. Drawings and general provisions of the Contract, including General and Supplementary Conditions and Division 01 Specification Sections, apply to this Section.

1.2 SUMMARY

A. Section includes fiber-cement siding.

B. Related Requirements:

1. Section 061000 "Rough Carpentry" for wood furring, grounds, nailers, and blocking.
2. Section 072100 "Thermal Insulation" for nailable insulated sheathing and weather-resistive barriers.

1.3 COORDINATION

A. Coordinate siding installation with flashings and other adjoining construction to ensure proper sequencing.

1.4 ACTION SUBMITTALS

A. Product Data: For each type of product. Include construction details, material descriptions, dimensions of individual components and profiles, and finishes.

B. Samples for Initial Selection: For fiber-cement siding including related accessories.

C. Samples for Verification: For each type, color, texture, and pattern required.

1. 12-inch- (300-mm-) long-by-actual-width Sample of siding.
2. 12-inch- (300-mm-) long-by-actual-width Samples of trim and accessories.

1.5 INFORMATIONAL SUBMITTALS

A. Product Certificates: For each type of fiber-cement siding.

B. Product Test Reports: Based on evaluation of comprehensive tests performed by a qualified testing agency, for fiber-cement siding.

C. Research/Evaluation Reports: For each type of fiber-cement siding required, from ICC-ES.

D. Sample Warranty: For special warranty.

1.6 CLOSEOUT SUBMITTALS

A. Maintenance Data: For each type of product, including related accessories, to include in maintenance manuals.

1.7 MAINTENANCE MATERIAL SUBMITTALS

A. Furnish extra materials that match products installed and that are packaged with protective covering for storage and identified with labels describing contents.

1. Furnish full lengths of fiber-cement siding including related accessories, in a quantity equal to 2 percent of amount installed.

1.8 DELIVERY, STORAGE, AND HANDLING

A. Deliver and store packaged materials in original containers with labels intact until time of use.

B. Store materials on elevated platforms, under cover, and in a dry location.

1.9 WARRANTY

A. Special Warranty: Manufacturer agrees to repair or replace products that fail in materials or workmanship within specified warranty period.

1. Failures include, but are not limited to, the following:

a. Structural failures including cracking and deforming.
b. Deterioration of materials beyond normal weathering.

2. Fading is defined as loss of color, after cleaning with product recommend by manufacturer, of more than 4 Hunter color-difference units as measured according to ASTM D 2244.

3. Product Warranty Period: 30 years from date of Substantial Completion.

4. Finish Warranty Period: 15 years from date of Substantial Completion.

PART 2 - PRODUCTS

2.1 MANUFACTURERS

A. Source Limitations: Obtain products, including related accessories, from single source from single manufacturer.

2.2 FIBER-CEMENT SIDING

A. General: ASTM C 1186, Type A, Grade II, fiber-cement board, noncombustible when tested according to ASTM E 136; with a flame-spread index of 25 or less when tested according to ASTM E 84.

1. Basis-of-Design Product: Subject to compliance with requirements, provide James Hardie Building Products, Inc.; HardiePlank Lap Siding Smooth or a comparable product by one of the following:

a. CertainTeed Corporation.
b. GAF Materials Corporation.

B. Labeling: Provide fiber-cement siding that is tested and labeled according to ASTM C 1186 by a qualified testing agency acceptable to authorities having jurisdiction.

C. Nominal Thickness: Not less than 5/16 inch (8 mm).

D. Horizontal Pattern: Boards 6-1/4 to 6-1/2 inches (159 to 165 mm) wide in plain style.

1. Texture: Smooth.

E. Color: Factor finish as selected from manufacturer's full range of standard colors.

2.3 ACCESSORIES

A. Siding Accessories, General: Provide starter strips, edge trim, outside and inside corner caps, and other items as recommended by siding manufacturer for building configuration.

1. Provide accessories matching color and texture of adjacent siding unless otherwise indicated.

B. Decorative Accessories: Provide the following fiber-cement decorative accessories as indicated, factory finished to match siding:
1. Fasciae.
2. Moldings and trim.

C. Flashing: Provide aluminum flashing complying with Section 076200 "Sheet Metal Flashing and Trim" at window and door heads and where indicated.

1. Finish for Aluminum Flashing: High-performance organic finish.

D. Fasteners:
1. For fastening to metal, use ribbed bugle-head screws of sufficient length to penetrate a minimum of 1/4 inch (6 mm), or three screw-threads, into substrate.
2. For fastening fiber cement, use stainless-steel fasteners.

E. Insect Screening for Soffit Vents: Stainless steel, 18-by-18 (1.4-by-1.4-mm) mesh.

F. Continuous Soffit Vents: Aluminum, hat-channel shape, with perforations; 2 inches (51 mm) wide and not less than 96 inches (2438 mm) long.

1. Net-Free Area: 4 sq. in. /linear ft. (280 sq. cm/m).
2. Finish: White paint.

PART 3 - EXECUTION

3.1 EXAMINATION

A. Examine substrates for compliance with requirements for installation tolerances and other conditions affecting performance of fiber-cement siding and related accessories.

B. Proceed with installation only after unsatisfactory conditions have been corrected.

3.2 PREPARATION

A. Clean substrates of projections and substances detrimental to application.

3.3 INSTALLATION

A. General: Comply with manufacturer's written installation instructions applicable to products and applications indicated unless more stringent requirements apply.

1. Do not install damaged components.
2. Install fasteners no more than 24 inches (600 mm) o.c.

B. Install joint sealants as specified in Section 079200 "Joint Sealants" and to produce a weathertight installation.

3.4 ADJUSTING AND CLEANING

A. Remove damaged, improperly installed, or otherwise defective materials and replace with new materials complying with specified requirements.

B. Clean finished surfaces according to manufacturer's written instructions and maintain in a clean condition during construction.

END OF SECTION 074646

SECTION 075323 – ETHYLENE-PROPYLENE-DIENE-MONOMER (EPDM) ROOFING

PART 1 - GENERAL

1.1 RELATED DOCUMENTS

A. Drawings and general provisions of the Contract, including General and Supplementary Conditions and Division 1 Specification Sections, apply to this Section.

1.2 SUMMARY

A. This Section includes the following:

1. Fully adhered membrane roofing system with vapor retarder.
2. Roof insulation.

1.3 DEFINITIONS

A. Roofing Terminology: Refer to ASTM D 1079 and glossary of NRCA's "The NRCA Roofing and Waterproofing Manual" for definition of terms related to roofing work in this Section.

B. Design Uplift Pressure: The uplift pressure, calculated according to procedures in SPRI's "Wind Load Design Guide for Fully Adhered and Mechanically Fastened Roofing Systems," before multiplication by a safety factor.

C. Factored Design Uplift Pressure: The uplift pressure, calculated according to procedures in SPRI's "Wind Load Design Guide for Fully Adhered and Mechanically Fastened Roofing Systems," after multiplication by a safety factor.

1.4 PERFORMANCE REQUIREMENTS

A. General: Provide installed roofing membrane and base flashings that remain watertight; do not permit the passage of water; and resist specified uplift pressures, thermally induced movement, and exposure to weather without failure.

B. Material Compatibility: Provide roofing materials that are compatible with one another under conditions of service and application required, as demonstrated by roofing membrane manufacturer based on testing and field experience.

C. FMG Listing: Provide roofing membrane, base flashings, and component materials that comply with requirements in FMG 4450 and FMG 4470 as part of a membrane roofing system and that are listed in FMG's "Approval Guide" for Class 1 or noncombustible construction, as applicable. Identify materials with FMG markings.

1. Fire/Windstorm Classification: Class 1A- 120.

1.5 SUBMITTALS

A. Product Data: For each type of product indicated.

B. Shop Drawings: For roofing system. Include plans, elevations, sections, details, and attachments to other Work.

1. Base flashings and membrane terminations.
2. Tapered insulation, including slopes.
3. Insulation fastening patterns.

C. Installer Certificates: Signed by roofing system manufacturer certifying that Installer is approved, authorized, or licensed by manufacturer to install roofing system.

D. Warranties: Special warranties specified in this Section.

1.6 QUALITY ASSURANCE

A. Installer Qualifications: A qualified firm that is approved, authorized, or licensed by roofing system manufacturer to install manufacturer's product and that is eligible to receive manufacturer's warranty.

B. Manufacturer Qualifications: A qualified manufacturer that has UL listing and FMG approval for membrane roofing system identical to that used for this Project.

C. Testing Agency Qualifications: An independent testing agency with the experience and capability to conduct the testing indicated, as documented according to ASTM E 548.

D. Source Limitations: Obtain all components for membrane roofing system from same manufacturer as roofing membrane.

E. Fire-Test-Response Characteristics: Provide membrane roofing materials with the fire-test-response characteristics indicated as determined by testing identical products per test method below by UL, FMG, or another testing and inspecting agency acceptable to authorities having jurisdiction. Materials shall be identified with appropriate markings of applicable testing and inspecting agency.

1. Exterior Fire-Test Exposure: Class A; ASTM E 108, for application and roof slopes indicated.

1.7 DELIVERY, STORAGE, AND HANDLING

A. Deliver roofing materials to Project site in original containers with seals unbroken and labeled with manufacturer's name, product brand name and type, date of manufacture, and directions for storing and mixing with other components.

B. Store liquid materials in their original undamaged containers in a clean, dry, protected location and within the temperature range required by roofing system manufacturer. Protect stored liquid material from direct sunlight.

1. Discard and legally dispose of liquid material that cannot be applied within its stated shelf life.

C. Protect roof insulation materials from physical damage and from deterioration by sunlight, moisture, soiling, and other sources. Store in a dry location. Comply with insulation manufacturer's written instructions for handling, storing, and protecting during installation.

D. Handle and store roofing materials and place equipment in a manner to avoid permanent deflection of deck.

1.8 PROJECT CONDITIONS

A. Weather Limitations: Proceed with installation only when existing and forecasted weather conditions permit roofing system to be installed according to manufacturer's written instructions and warranty requirements.

1.9 WARRANTY

A. Special Warranty: Manufacturer's standard form, without monetary limitation, in which manufacturer agrees to repair or replace components of membrane roofing system that fail in materials or workmanship within specified warranty period. Failure includes roof leaks.

1. Special warranty includes roofing membrane, base flashings, roofing accessories, roof insulation fasteners, cover boards, vapor retarder and other components of membrane roofing system.
2. Warranty Period: 15 years from date of Substantial Completion.

PART 2 - PRODUCTS

2.1 MANUFACTURERS

A. In other Part 2 articles where subparagraph titles below introduce lists, the following requirements apply for product selection:

1. Manufacturers: Subject to compliance with requirements, provide products by the manufacturers specified.

2.2 EPDM ROOFING MEMBRANE

A. EPDM Roofing Membrane: ASTM D 4637, Type II, scrim or fabric internally reinforced uniform, flexible sheet made from EPDM, and as follows:

1. Manufacturers:

a. Basis of Design: Carlisle SynTec Incorporated; **Sure-Seal Fully Adhered.**
b. Firestone Building Products.
c. GenFlex Roofing Systems.
d. GAF Materials Corporation.
e. Stafast Roofing Products.

2. Thickness: 60 mils, nominal.
3. Exposed Face Color: Black.

2.3 AUXILIARY MATERIALS

A. General: Auxiliary materials recommended by roofing system manufacturer for intended use and compatible with membrane roofing.

1. Liquid-type auxiliary materials shall meet VOC limits of authorities having jurisdiction.

B. Sheet Flashing: 60-mil- thick EPDM, partially cured or cured, according to application.

C. Bonding Adhesive: Manufacturer's standard bonding adhesive.

D. Seaming Material: Single-component butyl splicing adhesive and splice cleaner.

E. Lap Sealant: Manufacturer's standard single-component sealant, color to match roofing membrane.

F. Water Cutoff Mastic: Manufacturer's standard butyl mastic sealant.

G. Metal Termination Bars: Manufacturer's standard predrilled stainless-steel or aluminum bars, approximately 1 by 1/8 inch thick; with anchors.

H. Metal Battens: Manufacturer's standard aluminum-zinc-alloy-coated or zinc-coated steel sheet, approximately 1 inch wide by 0.05 inch thick, prepunched.

I. Fasteners: Factory-coated steel fasteners and metal or plastic plates meeting corrosion-resistance provisions in FMG 4470, designed for fastening membrane to substrate, and acceptable to membrane roofing system manufacturer.

J. Miscellaneous Accessories: Provide pourable sealers, preformed cone and vent sheet flashings, preformed inside and outside corner sheet flashings, T-joint covers, in-seam sealants, termination reglets, cover strips, and other accessories.

2.4 VAPOR RETARDER

A. Polyethylene Vapor Retarder: ASTM D 4397, 6 mils thick, minimum, with maximum permeance rating of 0.13 perm.

1. Adhesive: Manufacturer's standard lap adhesive, FMG approved for vapor-retarder application.

2.5 ROOF INSULATION

A. General: Provide preformed roof insulation boards that comply with requirements and referenced standards, selected from manufacturer's standard sizes and of thicknesses indicated.

B. Polyisocyanurate Board Insulation: ASTM C 1289, Type II, Class 1, Grade 2, felt or glass-fiber mat faces on both major surfaces.

1. R-Value: 30
2. Manufacturers:

a. GenFlex Roofing Systems.
b. Dow Chemical Company.
c. Hunter.
d. GAF Materials Corporation.
e. Firestone Building Products

C. Tapered Insulation: Provide factory-tapered insulation boards fabricated to slope of 1/4 inch per 12 inches, unless otherwise indicated.

D. Provide preformed saddles, crickets, tapered edge strips, and other insulation shapes where indicated for sloping to drain. Fabricate to slopes indicated.

1. Slope to Existing Roof Drain Locations.

2.6 INSULATION ACCESSORIES

A. General: Furnish roof insulation accessories recommended by insulation manufacturer for intended use and compatible with membrane roofing.

B. Fasteners: Factory-coated steel fasteners and metal or plastic plates meeting corrosion-resistance provisions in FMG 4470, designed for fastening roof insulation to substrate, and acceptable to roofing system manufacturer.

C. Cover Board: ASTM C 1177/C 1177M, glass-mat, water-resistant gypsum substrate, 1/4 inch thick.

1. Product: Subject to compliance with requirements, provided "Dens-Deck" manufactured by Georgia-Pacific Corporation.

2.7 ASPHALT MATERIALS

A. Roofing Asphalt: ASTM D 312, Type III or IV.

2.8 WALKWAYS

A. Flexible Walkways: Factory-formed, nonporous, heavy-duty, solid-rubber, slip-resisting, surface-textured walkway pads, approximately 3/16 inch (5 mm) thick and acceptable to roofing system manufacturer.

PART 3 - EXECUTION

3.1 EXAMINATION

A. Examine substrates, areas, and conditions, with Installer present, for compliance with the following requirements and other conditions affecting performance of roofing system:

1. Verify that roof openings and penetrations are in place and set and braced and that roof drains are securely clamped in place.
2. Verify that wood blocking, curbs, and nailers are securely anchored to roof deck at penetrations and terminations and that nailers match thicknesses of insulation.
3. Verify that surface plane flatness and fastening of steel roof deck complies with requirements in Division 5 Section "Steel Deck."
4. Proceed with installation only after unsatisfactory conditions have been corrected.

3.2 PREPARATION

A. Clean substrate of dust, debris, moisture, and other substances detrimental to roofing installation according to roofing system manufacturer's written instructions. Remove sharp projections.

B. Prevent materials from entering and clogging roof drains and conductors and from spilling or migrating onto surfaces of other construction. Remove roof-drain plugs when no work is taking place or when rain is forecast.

C. Complete terminations and base flashings and provide temporary seals to prevent water from entering completed sections of roofing system at the end of the workday or when rain is forecast. Remove and discard temporary seals before beginning work on adjoining roofing.

D. Install acoustical roof deck rib insulation strips, specified in Division 5 Section "Steel Deck," according to acoustical roof deck manufacturer's written instructions.

3.3 VAPOR-RETARDER INSTALLATION

A. Loosely lay polyethylene-film vapor retarder in a single layer over area to receive vapor retarder, side and end lapping each sheet a minimum of 2 inches and 6 inches, respectively.

1. Seal side and end laps with tape.

B. Completely seal vapor retarder at terminations, obstructions, and penetrations to prevent air movement into membrane roofing system.

3.4 INSULATION INSTALLATION

A. Coordinate installing membrane roofing system components so insulation is not exposed to precipitation or left exposed at the end of the workday.

B. Comply with membrane roofing system manufacturer's written instructions for installing roof insulation.

C. Install tapered insulation under area of roofing to conform to slopes indicated.

D. Install one or more layers of insulation under area of roofing to achieve required thickness. Where overall insulation thickness is 2 inches or greater, install 2 or more layers with joints of each succeeding layer staggered from joints of previous layer a minimum of 6 inches in each direction.

E. Trim surface of insulation where necessary at roof drains so completed surface is flush and does not restrict flow of water.

F. Install insulation with long joints of insulation in a continuous straight line with end joints staggered between rows, abutting edges and ends between boards. Fill gaps exceeding 1/4 inch with insulation.

1. Cut and fit insulation within 1/4 inch of nailers, projections, and penetrations.

G. Mechanically Fastened and Adhered Insulation: Install each layer of insulation and secure first layer of insulation to deck using mechanical fasteners specifically designed and sized for fastening specified board-type roof insulation to deck type.

1. Fasten first layer of insulation according to requirements in FMG's "Approval Guide" for specified Windstorm Resistance Classification.
2. Fasten first layer of insulation to resist uplift pressure at corners, perimeter, and field of roof.
3. Install subsequent layers of insulation in a solid mopping of hot roofing asphalt, applied within plus or minus 25 deg F of equiviscous temperature.

H. Install cover boards over insulation with long joints in continuous straight lines with end joints staggered between rows. Loosely butt cover boards together and fasten to roof deck.

1. Fasten insulation according to requirements in FMG's "Approval Guide" for specified Windstorm Resistance Classification.
2. Fasten insulation to resist uplift pressure at corners, perimeter, and field of roof.

3.5 ADHERED MEMBRANE ROOFING INSTALLATION

A. Adhereroofing over area to receive roofing according to membrane roofing system manufacturer's written instructions. Unroll membrane roofing and allow to relax before installing.

B. Start installation of roofing in presence of roofing system manufacturer's technical personnel.

C. Accurately align roofing, and maintain uniform side and end laps of minimum dimensions required by manufacturer. Stagger end laps.

D. Bonding Adhesive: Apply to substrate and underside of roofing at rate required by manufacturer, and allow to partially dry before installing roofing. Do not apply to splice area of roofing.

E. In addition to adhering, mechanically fasten roofing securely at terminations, penetrations, and perimeters.

F. Apply roofing with side laps shingled with slope of roof deck where possible.

G. Adhesive Seam Installation: Clean both faces of splice areas, apply splicing cement, and firmly roll side and end laps of overlapping roofing according to manufacturer's written instructions to ensure a watertight seam installation. Apply lap sealant and seal exposed edges of roofing terminations.
   1. Apply a continuous bead of in-seam sealant before closing splice if required by roofing system manufacturer.

H. Tape Seam Installation: Clean and prime both faces of splice areas, apply splice tape, and firmly roll side and end laps of overlapping roofing according to manufacturer's written instructions to ensure a watertight seam installation. Apply lap sealant and seal exposed edges of roofing terminations.

I. Repair tears, voids, and lapped seams in roofing that do not comply with requirements.

J. Spread sealant or mastic bed over deck-drain flange at roof drains, and securely seal membrane roofing in place with clamping ring.

K. Adhere protection sheet over membrane roofing at locations indicated.

3.6 BASE FLASHING INSTALLATION

A. Install sheet flashings and preformed flashing accessories and adhere to substrates according to membrane roofing system manufacturer's written instructions.

B. Apply bonding adhesive to substrate and underside of sheet flashing at required rate and allow to partially dry. Do not apply bonding adhesive to seam area of flashing.

C. Flash penetrations and field-formed inside and outside corners with cured or uncured sheet flashing.

D. Clean splice areas, apply splicing cement, and firmly roll side and end laps of overlapping sheets to ensure a watertight seam installation. Apply lap sealant and seal exposed edges of sheet flashing terminations.

E. Terminate and seal top of sheet flashings and mechanically anchor to substrate through termination bars.

3.7 WALKWAY INSTALLATION

A. Flexible Walkways: Install walkway products in locations indicated. Adhere walkway products to substrate with compatible adhesive according to roofing system manufacturer's written instructions.

3.8 FIELD QUALITY CONTROL

A. Testing Agency: Owner will engage a qualified independent testing and inspecting agency to perform roof tests and inspections and to prepare test reports.

B. Final Roof Inspection: Arrange for roofing system manufacturer's technical personnel to inspect roofing installation on completion and submit report to Architect.

1. Notify Architect or Owner 48 hours in advance of date and time of inspection.

C. Repair or remove and replace components of membrane roofing system where test results or inspections indicate that they do not comply with specified requirements.

D. Additional testing and inspecting, at Contractor's expense, will be performed to determine compliance of replaced or additional work with specified requirements.

3.9 PROTECTING AND CLEANING

A. Protect membrane roofing system from damage and wear during remainder of construction period. When remaining construction will not affect or endanger roofing, inspect roofing for deterioration and damage, describing its nature and extent in a written report, with copies to Architect and Owner.

B. Correct deficiencies in or remove membrane roofing system that does not comply with requirements, repair substrates and repair or reinstall membrane roofing system to a condition free of damage and deterioration at time of Substantial Completion and according to warranty requirements.

C. Clean overspray and spillage from adjacent construction using cleaning agents and procedures recommended by manufacturer of affected construction.

END OF SECTION 075323

SECTION 076200 - SHEET METAL FLASHING AND TRIM

PART 1 - GENERAL

1.1 RELATED DOCUMENTS

A. Drawings and general provisions of the Contract, including General and Supplementary Conditions and Division 1 Specification Sections, apply to this Section.

1.2 SUMMARY

A. This Section includes the following sheet metal flashing and trim:

1. Manufactured through-wall flashing.
2. Formed roof drainage system.
3. Formed low-slope roof flashing and trim.
4. Formed wall flashing and trim.

B. Related Sections include the following:

1. Division 7 Section "Expansion Control" for manufactured expansion-joint covers.

1.3 PERFORMANCE REQUIREMENTS

A. General: Install sheet metal flashing and trim to withstand wind loads, structural movement, thermally induced movement, and exposure to weather without failing, rattling, leaking, and fastener disengagement.

B. Thermal Movements: Provide sheet metal flashing and trim that allow for thermal movements resulting from the following maximum change (range) in ambient and surface temperatures by preventing buckling, opening of joints, hole elongation, overstressing of components, failure of joint sealants, failure of connections, and other detrimental effects. Provide clips that resist rotation and avoid shear stress as a result of sheet metal and trim thermal movements. Base engineering calculation on surface temperatures of materials due to both solar heat gain and nighttime-sky heat loss.

1. Temperature Change (Range): 120 deg F, ambient; 180 deg F, material surfaces.

C. Water Infiltration: Provide sheet metal flashing and trim that do not allow water infiltration to building interior.

1.4 SUBMITTALS

A. Product Data: For each type of product indicated. Include construction details, material descriptions, dimensions of individual components and profiles, and finishes.

1.5 QUALITY ASSURANCE

A. Sheet Metal Flashing and Trim Standard: Comply with SMACNA's "Architectural Sheet Metal Manual." Conform to dimensions and profiles shown unless more stringent requirements are indicated.

1. Copper Standard: Comply with CDA's "Copper in Architecture Handbook."

1.6 DELIVERY, STORAGE, AND HANDLING

A. Deliver sheet metal flashing materials and fabrications undamaged. Protect sheet metal flashing and trim materials and fabrications during transportation and handling.

B. Unload, store, and install sheet metal flashing materials and fabrications in a manner to prevent bending, warping, twisting, and surface damage.

C. Stack materials on platforms or pallets, covered with suitable weathertight and ventilated covering. Do not store sheet metal flashing and trim materials in contact with other materials that might cause staining, denting, or other surface damage.

1.7 COORDINATION

A. Coordinate installation of sheet metal flashing and trim with interfacing and adjoining construction to provide a leakproof, secure, and noncorrosive installation.

PART 2 - PRODUCTS

2.1 MANUFACTURERS

A. In other Part 2 articles where titles below introduce lists, the following requirements apply to product selection:

1. Products: Subject to compliance with requirements, provide one of the products specified.

2.2 SHEET METALS

A. Copper Sheet: ASTM B 370, Temper H00 or H01, cold-rolled copper sheet.

B. Aluminum Sheet: ASTM B 209, Alloy 3003, 3004, 3105, or 5005, Temper suitable for forming and structural performance required, but not less than H14, finished as follows:

1. High-Performance Organic Finish: AA-C12C42R1x (Chemical Finish: cleaned with inhibited chemicals; Chemical Finish: acid-chromate-fluoride-phosphate conversion coating; Organic Coating: as specified below). Prepare, pretreat, and apply coating to exposed metal surfaces to comply with coating and resin manufacturers' written instructions.

a. Fluoropolymer 2-Coat System: Manufacturer's standard 2-coat, thermocured system consisting of specially formulated inhibitive primer and fluoropolymer color topcoat containing not less than 70 percent polyvinylidene fluoride resin by weight; complying with AAMA 2604.

1) Color: As selected by Architect from manufacturer's full range.

2.3 UNDERLAYMENT MATERIALS

A. Polyethylene Sheet: 6-mil- thick polyethylene sheet complying with ASTM D 4397.

B. Felts: ASTM D 226, Type II (No. 30), asphalt-saturated organic felt, nonperforated.

C. Slip Sheet: Rosin-sized paper, minimum 3 lb/100 sq. ft.

2.4 MISCELLANEOUS MATERIALS

A. General: Provide materials and types of fasteners, solder, welding rods, protective coatings, separators, sealants, and other miscellaneous items as required for complete sheet metal flashing and trim installation.

B. Fasteners: Wood screws, annular threaded nails, self-tapping screws, self-locking rivets and bolts, and other suitable fasteners designed to withstand design loads.

1. Nails for Copper Sheet: Copper, hardware bronze, or Series 300 stainless steel, 0.109 inch minimum and not less than 7/8 inch long, barbed with large head.
2. Exposed Fasteners: Heads matching color of sheet metal by means of plastic caps or factory-applied coating.
3. Fasteners for Flashing and Trim: Blind fasteners or self-drilling screws, gasketed, with hex washer head.
4. Blind Fasteners: High-strength aluminum or stainless-steel rivets.
5. Spikes and Ferrules: Same material as gutter; with spike with ferrule matching internal gutter width.

C. Solder for Copper: ASTM B 32, Grade Sn50, 50 percent tin and 50 percent lead.

D. Sealing Tape: Pressure-sensitive, 100 percent solids, polyisobutylene compound sealing tape with release-paper backing. Provide permanently elastic, nonsag, nontoxic, nonstaining tape.

E. Elastomeric Sealant: ASTM C 920, elastomeric silicone polymer sealant; of type, grade, class, and use classifications required to seal joints in sheet metal flashing and trim and remain watertight.

F. Butyl Sealant: ASTM C 1311, single-component, solvent-release butyl rubber sealant, polyisobutylene plasticized, heavy bodied for hooked-type expansion joints with limited movement.

G. Epoxy Seam Sealer: Two-part, noncorrosive, aluminum seam-cementing compound, recommended by aluminum manufacturer for exterior nonmoving joints, including riveted joints.

H. Bituminous Coating: Cold-applied asphalt mastic, SSPC-Paint 12, compounded for 15-mil dry film thickness per coat. Provide inert-type noncorrosive compound free of asbestos fibers, sulfur components, and other deleterious impurities.

I. Asphalt Roofing Cement: ASTM D 4586, asbestos free, of consistency required for application.

2.5 MANUFACTURED SHEET METAL FLASHING AND TRIM

A. Through-Wall Ribbed Sheet Metal Flashing: Manufacture through-wall sheet metal flashing for embedment in masonry with ribs at 3-inch intervals along length of flashing to provide an integral mortar bond. Manufacture through-wall flashing with snaplock receiver on exterior face to receive counterflashing.

1. Copper: 10 oz. minimum for fully concealed flashing; 16 oz. elsewhere.

a. Products:
1) Advanced Building Products Inc.; Cop-R-Loc Interlocking Flashing.
2) Cheney Flashing Company, Inc.; Cheney Flashing (Dovetail).
3) Cheney Flashing Company, Inc.; Cheney Flashing (Sawtooth).
4) Dur-O-Wal, Dayton Superior Corporation; Polytite Copper Flashing.
5) Keystone Flashing Company, Inc.; Keystone Three-Way Interlocking Thruwall Flashing.
6) Sandell Manufacturing Company, Inc.; Three-Way Saw Tooth Flashing.
7) York Manufacturing, Inc.; Cop-R-Loc Interlocking Flashing.

2.6 FABRICATION, GENERAL

A. General: Custom fabricate sheet metal flashing and trim to comply with recommendations in SMACNA's "Architectural Sheet Metal Manual" that apply to design, dimensions, metal, and other characteristics of item indicated. Shop fabricate items where practicable. Obtain field measurements for accurate fit before shop fabrication.

B. Fabricate sheet metal flashing and trim in thickness or weight needed to comply with performance requirements, but not less than that specified for each application and metal.

C. Fabricate sheet metal flashing and trim without excessive oil canning, buckling, and tool marks and true to line and levels indicated, with exposed edges folded back to form hems.

1. Seams for Aluminum: Fabricate nonmoving seams with flat-lock seams. Form seams and seal with epoxy seam sealer. Rivet joints for additional strength.
2. Seams for Other Than Aluminum: Fabricate nonmoving seams in accessories with flat-lock seams. Tin edges to be seamed, form seams, and solder.

D. Sealed Joints: Form nonexpansion but movable joints in metal to accommodate elastomeric sealant to comply with SMACNA recommendations.

E. Expansion Provisions: Where lapped or bayonet-type expansion provisions in the Work cannot be used, form expansion joints of intermeshing hooked flanges, not less than 1 inch deep, filled with elastomeric sealant concealed within joints.

F. Conceal fasteners and expansion provisions where possible on exposed-to-view sheet metal flashing and trim, unless otherwise indicated.

G. Fabricate cleats and attachment devices from same material as accessory being anchored or from compatible, noncorrosive metal.

1. Thickness: As recommended by SMACNA's "Architectural Sheet Metal Manual" and FMG Loss Prevention Data Sheet 1-49 for application but not less than thickness of metal being secured.

2.7 ROOF DRAINAGE SHEET METAL FABRICATIONS

A. Hanging Gutters: Fabricate to cross section indicated, complete with end pieces, outlet tubes, and other accessories as required. Fabricate in minimum 96-inch- long sections. Furnish flat-stock gutter spacers and gutter brackets fabricated from same metal as gutters, of size recommended by SMACNA but not less than twice the gutter thickness. Fabricate expansion joints, expansion-joint covers, and gutter accessories from same metal as gutters.

1. Gutter Style: See Drawings.
2. Expansion Joints: Lap type.
3. Accessories: Valley baffles.
4. Gutters with Girth 26 to 30 Inches: Fabricate from the following material:

a. Aluminum: 0.063 inch thick.

B. Downspouts: Fabricate rectangular open-face downspouts complete with mitered elbows. Furnish with metal hangers, from same material as downspouts, and anchors.

1. Manufactured Hanger Style: Bracket.
2. Fabricate downspouts from the following material:

a. Aluminum: 0.024 inch thick.

C. Parapet Scuppers: Fabricate scuppers of dimensions required with closure flange trim to exterior, 4-inch-wide wall flanges to interior, and base extending 4 inches beyond cant or tapered strip into field of roof. Fasten gravel guard angles to base of scupper.

1. Fabricate parapet scuppers from the following material:

a. Aluminum: 0.0320 inch thick.

D. Conductor Heads: Fabricate conductor heads with flanged back and stiffened top edge and of dimensions and shape indicated complete with outlet tubes, exterior flange trim, and built-in overflows.

1. Fabricate conductor heads from the following material:

a. Aluminum: 0.0320 inch thick.

2.8 LOW-SLOPE ROOF SHEET METAL FABRICATIONS

A. Copings: Fabricate in minimum 96-inch- long, but not exceeding 10-foot- long, sections. Fabricate joint plates of same thickness as copings. Furnish with continuous cleats to support edge of external leg and drill elongated holes for fasteners on interior leg. Miter corners, seal, and solder or weld watertight.

1. Joint Style: Butt, with 12-inch- wide concealed backup plate.
2. Fabricate copings from the following material:

a. Aluminum: 0.050 inch thick.

B. Roof and Roof to Wall Transition Expansion-Joint Cover: Fabricate from the following material:

1. Aluminum: 0.050 inch thick.

C. Base Flashing: Fabricate from the following material:

1. Aluminum: 0.040 inch thick.

D. Counterflashing: Fabricate from the following material:

1. Aluminum: 0.0320 inch thick.

E. Flashing Receivers: Fabricate from the following material:

1. Aluminum: 0.0320 inch thick.

2.9 WALL SHEET METAL FABRICATIONS

A. Through-Wall Flashing: Fabricate continuous flashings in minimum 96-inch- long, but not exceeding 12 foot long, sections, under copings, at shelf angles, and where indicated. Fabricate discontinuous lintel, sill, and similar flashings to extend 6 inches beyond each side of wall openings. Form with 2-inch- high end dams. Fabricate from the following material:

1. Copper: 16 oz./sq. ft..

B. Wall Expansion-Joint Cover: Fabricate from the following material:

1. Aluminum: 0.040 inch thick.

2.10 FINISHES

A. Comply with NAAMM's "Metal Finishes Manual for Architectural and Metal Products" for recommendations for applying and designating finishes.

B. Protect mechanical and painted finishes on exposed surfaces from damage by applying a strippable, temporary protective covering before shipping.

C. Appearance of Finished Work: Variations in appearance of abutting or adjacent pieces are acceptable if they are within one-half of the range of approved Samples. Noticeable variations in the same piece are not acceptable. Variations in appearance of other components are acceptable if they are within the range of approved Samples and are assembled or installed to minimize contrast.

PART 3 - EXECUTION

3.1 EXAMINATION

A. Examine substrates, areas, and conditions, with Installer present, to verify actual locations, dimensions and other conditions affecting performance of work.

1. Verify that substrate is sound, dry, smooth, clean, sloped for drainage, and securely anchored.
2. Proceed with installation only after unsatisfactory conditions have been corrected.

3.2 INSTALLATION, GENERAL

A. General: Anchor sheet metal flashing and trim and other components of the Work securely in place, with provisions for thermal and structural movement. Use fasteners, solder, welding rods, protective coatings, separators, sealants, and other miscellaneous items as required to complete sheet metal flashing and trim system.

1. Torch cutting of sheet metal flashing and trim is not permitted.

B. Metal Protection: Where dissimilar metals will contact each other or corrosive substrates, protect against galvanic action by painting contact surfaces with bituminous coating or by other permanent separation as recommended by fabricator or manufacturers of dissimilar metals.

1. Underlayment: Where installing metal flashing directly on cementitious or wood substrates, install a course of felt underlayment and cover with a slip sheet or install a course of polyethylene underlayment.
2. Bed flanges in thick coat of asphalt roofing cement where required for waterproof performance.

C. Install exposed sheet metal flashing and trim without excessive oil canning, buckling, and tool marks.

D. Install sheet metal flashing and trim true to line and levels indicated. Provide uniform, neat seams with minimum exposure of solder, welds, and elastomeric sealant.

E. Install sheet metal flashing and trim to fit substrates and to result in watertight performance. Verify shapes and dimensions of surfaces to be covered before fabricating sheet metal.

1. Space cleats not more than 12 inches apart. Anchor each cleat with two fasteners. Bend tabs over fasteners.

F. Expansion Provisions: Provide for thermal expansion of exposed flashing and trim. Space movement joints at a maximum of 10 feet with no joints allowed within 24 inches of corner or intersection. Where lapped or bayonet-type expansion provisions cannot be used or would not be sufficiently watertight, form expansion joints of intermeshing hooked flanges, not less than 1 inch deep, filled with elastomeric sealant concealed within joints.

G. Fasteners: Use fasteners of sizes that will penetrate substrate not less than 1-1/4 inches for nails and not less than 3/4 inch for wood screws.

1. Aluminum: Use aluminum or stainless-steel fasteners.
2. Copper: Use copper, hardware bronze, or stainless-steel fasteners.

H. Seal joints with elastomeric sealant as required for watertight construction.

1. Where sealant-filled joints are used, embed hooked flanges of joint members not less than 1 inch into sealant. Form joints to completely conceal sealant. When ambient temperature at time of installation is moderate, between 40 and 70 deg F, set joint members for 50 percent movement either way. Adjust setting proportionately for installation at higher ambient temperatures. Do not install sealant-type joints at temperatures below 40 deg F.
2. Prepare joints and apply sealants to comply with requirements in Division 7 Section "Joint Sealants."

I. Soldered Joints: Clean surfaces to be soldered, removing oils and foreign matter. Pretin edges of sheets to be soldered to a width of 1-1/2 inches except where pretinned surface would show in finished Work.

1. Do not solder aluminum sheet.
2. Copper Soldering: Tin uncoated copper surfaces at edges of sheets using solder recommended for copper work.
3. Do not use open-flame torches for soldering. Heat surfaces to receive solder and flow solder into joints. Fill joints completely. Completely remove flux and spatter from exposed surfaces.

J. Aluminum Flashing: Rivet or weld joints in uncoated aluminum where necessary for strength.

3.3 ROOF DRAINAGE SYSTEM INSTALLATION

A. General: Install sheet metal roof drainage items to produce complete roof drainage system according to SMACNA recommendations and as indicated. Coordinate installation of roof perimeter flashing with installation of roof drainage system.

B. Hanging Gutters: Join sections with riveted and soldered joints or with lapped joints sealed with elastomeric sealant. Provide for thermal expansion. Attach gutters at eave or fascia to firmly anchored gutter brackets spaced not more than 36 inches apart. Provide end closures and seal watertight with sealant. Slope to downspouts.

1. Fasten gutter spacers to front and back of gutter.
2. Loosely lock straps to front gutter bead and anchor to roof deck.
3. Anchor and loosely lock back edge of gutter to continuous eave or apron flashing.
4. Anchor back of gutter that extends onto roof deck with cleats spaced not more than 24 inches apart.
5. Install gutter with expansion joints at locations indicated but not exceeding 50 feet apart. Install expansion joint caps.

C. Downspouts: Join sections with 1-1/2-inch telescoping joints. Provide fasteners designed to hold downspouts securely 1 inch away from walls; locate fasteners at top and bottom and at approximately 60 inches o.c. in between.

1. Provide elbows at base of downspout to direct water away from building.

D. Parapet Scuppers: Install scuppers where indicated through parapet. Continuously support scupper, set to correct elevation, and seal flanges to interior wall face, over cants or tapered edge strips, and under roofing membrane.

1. Anchor scupper closure trim flange to exterior wall and seal or solder to scupper.
2. Loosely lock front edge of scupper with conductor head.
3. Seal or solder exterior wall scupper flanges into back of conductor head.

E. Conductor Heads: Anchor securely to wall with elevation of conductor head rim 1 inch below scupper discharge.

F. Expansion-Joint Covers: Install expansion-joint covers at locations and of configuration indicated. Lap joints a minimum of 4 inches in direction of water flow.

3.4 ROOF FLASHING INSTALLATION

A. General: Install sheet metal roof flashing and trim to comply with performance requirements, sheet metal manufacturer's written installation instructions, and SMACNA's "Architectural Sheet Metal Manual." Provide concealed fasteners where possible, set units true to line, and level as indicated. Install work with laps, joints, and seams that will be permanently watertight.

B. Pipe or Post Counterflashing: Install counterflashing umbrella with close-fitting collar with top edge flared for elastomeric sealant, extending a minimum of 4 inches over base flashing. Install stainless-steel draw band and tighten.

C. Counterflashing: Coordinate installation of counterflashing with installation of base flashing. Insert counterflashing in reglets or receivers and fit tightly to base flashing. Extend counterflashing 4 inches over base flashing. Lap counterflashing joints a minimum of 4 inches and bed with elastomeric sealant.

1. Secure in a waterproof manner by means of interlocking folded seam or blind rivets and sealant.

3.5 WALL FLASHING INSTALLATION

A. General: Install sheet metal wall flashing to intercept and exclude penetrating moisture according to SMACNA recommendations and as indicated. Coordinate installation of wall flashing with installation of wall-opening components such as windows, doors, and louvers.

B. Through-Wall Flashing: Installation of manufactured through-wall flashing is specified in Division 4 Section "Unit Masonry Assemblies."

3.6 CLEANING AND PROTECTION

A. Clean exposed metal surfaces of substances that interfere with uniform oxidation and weathering.

B. Clean and neutralize flux materials. Clean off excess solder and sealants.

C. Remove temporary protective coverings and strippable films as sheet metal flashing and trim are installed. On completion of installation, clean finished surfaces, including removing unused fasteners, metal filings, pop rivet stems, and pieces of flashing. Maintain in a clean condition during construction.

D. Replace sheet metal flashing and trim that have been damaged or that have deteriorated beyond successful repair by finish touchup or similar minor repair procedures.

END OF SECTION 076200

SECTION 077200 - ROOF ACCESSORIES

PART 1 - GENERAL

1.1 RELATED DOCUMENTS

A. Drawings and general provisions of the Contract, including General and Supplementary Conditions and Division 1 Specification Sections, apply to this Section.

1.2 SUMMARY

A. This Section includes the following:

1. Roof curbs.
2. Equipment supports.
3. Roof supports.

1.3 SUBMITTALS

A. Product Data: For each type of roof accessory indicated. Include construction details, material descriptions, dimensions of individual components and profiles, and finishes.

B. Shop Drawings: Show fabrication and installation details for roof accessories. Show layouts of roof accessories including plans and elevations. Indicate dimensions, weights, loadings, required clearances, method of field assembly, and components. Include plans, elevations, sections, details, and attachments to other work.

C. Coordination Drawings: Roof plans, drawn to scale, and coordinating penetrations and roof-mounted items. Show the following:

1. Size and location of roof accessories specified in this Section.
2. Method of attaching roof accessories to roof or building structure.
3. Other roof-mounted items including mechanical and electrical equipment, ductwork, piping, and conduit.

1.4 QUALITY ASSURANCE

A. Sheet Metal Standard: Comply with SMACNA's "Architectural Sheet Metal Manual" details for fabrication of units, including flanges and cap flashing to coordinate with type of roofing indicated.

1.5 DELIVERY, STORAGE, AND HANDLING

A. Pack, handle, and ship roof accessories properly labeled in heavy-duty packaging to prevent damage.

1.6 PROJECT CONDITIONS

A. Field Measurements: Verify required openings for each type of roof accessory by field measurements before fabrication and indicate measurements on Shop Drawings.

1.7 COORDINATION

A. Coordinate layout and installation of roof accessories with roofing membrane and base flashing and interfacing and adjoining construction to provide a leakproof, weathertight, secure, and noncorrosive installation.

1. Adjust location of roof accessories that would interrupt roof drainage routes.

PART 2 - PRODUCTS

2.1 MANUFACTURERS

A. Manufacturers: Subject to compliance with requirements, provide products by one of the manufacturers listed in other Part 2 articles.

2.2 METAL MATERIALS

A. Galvanized Steel Sheet: ASTM A 653/A 653M, G90 coated.

B. Aluminum-Zinc Alloy-Coated Steel Sheet: ASTM A 792/A 792M, AZ50 coated.

C. Prepainted, Metallic-Coated Steel Sheet: Steel sheet metallic coated by hot-dip process and prepainted by coil-coating process to comply with ASTM A 755/A 755M.

1. Exposed Finishes: High-Performance Organic Finish (2-Coat Fluoropolymer): Prepare, pretreat, and apply coating to exposed metal surfaces to comply with coating and resin manufacturer's written instructions.

a. Fluoropolymer 2-Coat System: Manufacturer's standard 2-coat, thermocured system consisting of specially formulated inhibitive primer and fluoropolymer color topcoat containing not less than 70 percent polyvinylidene fluoride resin by weight; complying with physical properties and coating performance requirements in AAMA 2604, except as modified below:

1) Humidity Resistance: 1000 hours.
2) Salt-Spray Resistance: 1000 hours.

D. Aluminum Sheet: ASTM B 209, alloy and temper recommended by manufacturer for type of use and mill finish.

1. High-Performance Organic Finish (2-Coat Fluoropolymer): AA-C12C40R1x (Chemical Finish: Cleaned with inhibited chemicals; Chemical Finish: Conversion coating; Organic Coating: Manufacturer's standard 2-coat, thermocured system consisting of specially formulated inhibitive primer and fluoropolymer color topcoat containing not less than 70 percent polyvinylidene fluoride resin by weight). Prepare, pretreat, and apply coating to exposed metal surfaces to comply with AAMA 2604 and with coating and resin manufacturer's written instructions.

a. Color and Gloss: As selected by Architect from manufacturer's full range.
b. Architect from manufacturer's full range.

E. Aluminum Extrusions and Tubes: ASTM B 221, alloy and temper recommended by manufacturer for type of use, mill finished.

F. Stainless-Steel Shapes or Sheet: ASTM A 240/A 240M or ASTM A 666, Type 304 or Type 316, No. 2D finish.

G. Steel Shapes: ASTM A 36/A 36M, hot-dip galvanized to comply with ASTM A 123/A 123M, unless otherwise indicated.

H. Galvanized Steel Tube: ASTM A 500, round tube, hot-dip galvanized to comply with ASTM A 123/A 123M.

I. Galvanized Steel Pipe: ASTM A 53/A 53M.

2.3 MISCELLANEOUS MATERIALS

A. Glass-Fiber Board Insulation: ASTM C 726, 1 inch thick.

B. Polyisocyanurate Board Insulation: ASTM C 1289, 1 inch thick.

C. Wood Nailers: Softwood lumber, pressure treated with waterborne preservatives for aboveground use, complying with AWPA C2; not less than 1-1/2 inches thick.

D. Bituminous Coating: Cold-applied asphalt mastic, SSPC-Paint 12, compounded for 15-mil dry film thickness per coat. Provide inert-type noncorrosive compound free of asbestos fibers, sulfur components, and other deleterious impurities.

E. Polyethylene Sheet: 6-mil- thick, polyethylene sheet complying with ASTM D 4397.

F. Felt: ASTM D 226, Type II (No. 30), asphalt-saturated organic felt, nonperforated.

1. Slip Sheet: Rosin-sized paper, minimum 3 lb/100 sq. ft.

G. Fasteners: Same metal as metals being fastened, or nonmagnetic stainless steel or other noncorrosive metal as recommended by roof accessory manufacturer. Match finish of exposed fasteners with finish of material being fastened. Provide nonremovable fastener heads to exterior exposed fasteners.

H. Gaskets: Manufacturer's standard tubular or fingered design of neoprene, EPDM, or PVC; or flat design of foam rubber, sponge neoprene, or cork.

I. Elastomeric Sealant: ASTM C 920, polyurethane sealant; of type, grade, class, and use classifications required to seal joints in sheet metal flashing and trim and remain watertight.

J. Butyl Sealant: ASTM C 1311, single-component, solvent-release butyl rubber sealant, polyisobutylene plasticized, and heavy bodied for hooked-type expansion joints with limited movement.

K. Roofing Cement: ASTM D 4586, nonasbestos, fibrated asphalt cement designed for trowel application or other adhesive compatible with roofing system.

2.4 ROOF CURBS

A. Roof Curbs: Provide metal roof curbs, internally reinforced and capable of supporting superimposed live and dead loads, including equipment loads and other construction to be supported on roof curbs. Fabricate with welded or sealed mechanical corner joints, with integral metal cant and integral formed mounting flange at perimeter bottom. Coordinate dimensions with rough-in information or Shop Drawings of equipment to be supported.

1. Manufacturers:

   a. Colony Custom Curbs.
   b. Commodity Products Company, Inc.
   c. Conn-Fab Sales, Inc.
   d. Curbs Plus Inc.
   e. Custom Curb, Inc.
   f. LM Curbs.
   g. Loren Cook Company.
   h. Metallic Products Corporation.
   i. Pate Company (The).
   j. Roof Products & Systems Corporation.
   k. Roof Products, Inc.
   l. Thaler Metal Industries Ltd.
   m. ThyCurb; Div. of Thybar Corporation.
   n. Uni-Curb, Inc.
   o. Vent Products Company, Inc.

2. Load Requirements: Coordinate with Applicable Roof Top Mechanical units.
3. Material: Aluminum sheet, 0.090 inch thick.
4. Liner: Same material as curb, of manufacturer's standard thickness and finish.
5. Factory install wood nailers at tops of curbs.
6. On ribbed or fluted metal roofs, form flange at perimeter bottom to conform to roof profile.
7. Factory insulate curbs with 1-1/2-inch- thick, cellulosic or glass-fiber board insulation.
8. Curb height may be determined by adding thickness of roof insulation and minimum base flashing height recommended by roofing membrane manufacturer. Fabricate units to minimum height of 8 inches, unless otherwise indicated.
9. Sloping Roofs: Where slope of roof deck exceeds 1:48, fabricate curb units with water diverter or cricket and with height tapered to match slope to level tops of units.

2.5 EQUIPMENT SUPPORTS

A. Equipment Supports: Provide metal equipment supports, internally reinforced and capable of supporting superimposed live and dead loads, including equipment loads and other construction to be supported. Fabricate with welded or sealed mechanical corner joints, with integral metal cant and integral formed mounting flange at perimeter bottom. Coordinate dimensions with rough-in information or Shop Drawings of equipment to be supported.

1. Manufacturers:

   a. Colony Custom Curbs.
   b. Commodity Products Company, Inc.
   c. Conn-Fab Sales, Inc.
   d. Curbs Plus Inc.
   e. Custom Curb, Inc.
   f. LM Curbs.

g. Loren Cook Company.
h. Metallic Products Corporation.
i. Pate Company (The).
j. Roof Products & Systems Corporation.
k. Roof Products, Inc.
l. Thaler Metal Industries Ltd.
m. ThyCurb; Div. of Thybar Corporation.
n. Uni-Curb, Inc.
o. Vent Products Company, Inc.

2. Load Requirements: Coordinate with Applicable Roof Top Mechanical units.
3. Material: Aluminum sheet, 0.090 inch thick.
4. Factory-install continuous wood nailers 3-1/2 inches wide at tops of equipment supports.
5. Metal Counterflashing: Manufacturer's standard removable counterflashing, fabricated of same metal and finish as equipment support.
6. On ribbed or fluted metal roofs, form flange at perimeter bottom to conform to roof profile.
7. Fabricate units to minimum height of 8 inches, unless otherwise indicated.
8. Sloping Roofs: Where slope of roof deck exceeds 1:48, fabricate curb units with water diverter or cricket and with height tapered to match slope to level tops of units.

2.6 ROOF SUPPORTS

A. Pipe Roof Supports: Adjustable height, extruded-aluminum tube, urethane insulation filled, 2 inches in diameter, with aluminum base plates and manufacturer's recommended hardware for mounting to structure, and extruded-aluminum carrier assemblies, suitable for quantity of pipe runs and sizes, with EPDM end caps. Include manufacturer's standard hardware for mounting to structure or structural roof deck.

1. Manufacturers:

a. Thaler Metal Industries Ltd.

2. Pipe Support Height: As indicated.
3. Pipe Roller Assembly: Stainless-steel roller assembly sized for supported pipes with extruded aluminum.
4. Pipe Support Flashing: Insulated sleeve flashings with integral base flange, and EPDM grommetted top seal and base seals.

a. Metal: Aluminum sheet, 0.064 inch thick.

B. Light-Duty Pipe Roof Supports: Extruded-aluminum base assembly and Type 304 stainless-steel roller assembly for pipe sizes indicated, including manufacturer's standard hardware for mounting to structure or structural roof deck.

1. Manufacturers:

a. Thaler Metal Industries Ltd.

C. Duct Roof Supports: 2-inch- diameter, extruded-aluminum, urethane-insulated supports, including manufacturer's standard hardware for mounting to structure or structural roof deck.

1. Manufacturers:

a. Thaler Metal Industries Ltd.

PART 3 - EXECUTION

3.1 EXAMINATION

A. Examine substrates, areas, and conditions, with Installer present, to verify actual locations, dimensions, and other conditions affecting performance of work.

1. Verify that substrate is sound, dry, smooth, clean, sloped for drainage, and securely anchored and is ready to receive roof accessories.
2. Verify dimensions of roof openings for roof accessories.
3. Proceed with installation only after unsatisfactory conditions have been corrected.

3.2 INSTALLATION

A. General: Install roof accessories according to manufacturer's written instructions. Anchor roof accessories securely in place and capable of resisting forces specified. Use fasteners, separators, sealants, and other miscellaneous items as required for completing roof accessory installation. Install roof accessories to resist exposure to weather without failing, rattling, leaking, and fastener disengagement.

B. Install roof accessories to fit substrates and to result in watertight performance.

C. Metal Protection: Where dissimilar metals will contact each other or corrosive substrates, protect against galvanic action by painting contact surfaces with bituminous coating or by other permanent separation as recommended by manufacturer.

1. Coat concealed side of uncoated aluminum roof accessories with bituminous coating where in contact with wood, ferrous metal, or cementitious construction.
2. Underlayment: Where installing exposed-to-view components of roof accessories directly on cementitious or wood substrates, install a course of felt underlayment and cover with a slip sheet, or install a course of polyethylene underlayment.
3. Bed flanges in thick coat of asphalt roofing cement where required by roof accessory manufacturers for waterproof performance.

D. Install roof accessories level, plumb, true to line and elevation, and without warping, jogs in alignment, excessive oil canning, buckling, or tool marks.

E. Roof Curb Installation:

1. Set roof curb so top surface of roof curb is level.

F. Equipment Support Installation:

1. Set equipment support so top surface of equipment support is level.

G. Roof Hatch Installation:

1. Check roof hatch for proper operation. Adjust operating mechanism as required. Clean and lubricate joints and hardware.
2. Attach safety railing system to roof hatch curb.
3. Attach ladder safety post according to manufacturer's written instructions.

H. Heat and Smoke Vent Installation: Locate, install, and test heat and smoke vents according to NFPA 204.

1. Check heat and smoke vent for proper operation. Adjust operating mechanism as required.

I. Gravity Ventilator Installation:

1. Check relief vents for proper operation and unrestricted airflow.

J. Roof Walkway Installation:

1. Verify location of points of access to roof-mounted equipment via use of roof walkways.
2. Remove ballast from top surface of low-slope roofing section surface at the full area of contact surface of roof walkway supports.
3. Verify that roof walkway support isolation pads are in place prior to placement of roof walkway onto low-slope roofing section surface.

K. Preformed Flashing Installation:

1. Secure to roof membrane according to vent and stack flashing manufacturer's written instructions.

L. Seal joints with elastomeric sealant as required by manufacturer of roof accessories.

3.3 TOUCH UP

A. Touch up factory-primed surfaces with compatible primer ready for field painting in accordance with Division 9 painting Sections.

B. Galvanized Surfaces: Clean field welds, bolted connections, and abraded areas and repair galvanizing to comply with ASTM A 780.

3.4 CLEANING

A. Clean exposed surfaces according to manufacturer's written instructions.

END OF SECTION 077200

SECTION 078413
FIRE PROTECTION, HVAC & PLUMBING PENETRATION FIRESTOPPING
TABLE OF CONTENTS

PART 1 GENERAL

1.1 SUMMARY
1.2 REFERENCES
1.3 DEFINITIONS
1.4 SYSTEM DESCRIPTION
1.5 SUBMITTALS
1.6 QUALITY ASSURANCE
1.7 DELIVERY, STORAGE AND HANDLING
1.8 PROJECT CONDITIONS
1.9 WARRANTY

PART 2 PROJECTS

2.1 THROUGH PENETRATION FIRESTOPPING OF FIRE-RATED CONSTRUCTION
2.2 SMOKE STOPPING AT SMOKE PARTITIONS
2.3 ACCESSORIES

PART 3 EXECUTION

3.1 EXAMINATION
3.2 PREPARATION
3.3 INSTALLATION
3.4 FIELD QUALITY CONTROL
3.5 ADJUSTING AND CLEANING
3.6 SYSTEMS AND APPLICATION SCHEDULES

SECTION 078413 FIRE PROTECTION, HVAC & PLUMBING PENETRATION FIRESTOPPING

PART 1 GENERAL

1.1 SUMMARY

A. Drawings and general provisions of the Contract, including General and Supplementary Conditions and Division 01 Specification Sections, apply to this Section.

B. Section includes:

1. Through-penetration firestopping in fire rated construction.

2. Through-penetration smoke-stopping in smoke partitions.

C. Related items:

1. Fire dampers and manufactured devices: Refer to Division 23 Section *HVAC Air Distribution*.

2. Smoke dampers and combination fire/smoke dampers. Refer to Division 23 Section *HVAC Air Distribution*.

1.2 REFERENCES

A. Underwriters Laboratories

1. UL Fire Resistance Directory

a. Through-penetration firestop devices (XHCR)

b. Fire resistance rating (BXUV)

c. Through-penetration firestop systems (XHEZ)

d. Fill, void, or cavity material (XHHW)

B. American Society for Testing and Materials Standards:

1. ASTM E 814-88: Standard Test Method for Fire Tests of Through-Penetration Firestops.

1.3 DEFINITIONS

A. Assembly: Particular arrangement of materials specific to given type of construction described or detailed in referenced documents.

B. Barriers: Time-rated fire walls, smoke barrier walls, time-rated ceiling/floor assemblies and structural floors.

C. Firestopping: Methods and materials applied in penetrations and unprotected openings to limit spread of heat, fire, gasses and smoke.

D. Penetration: Opening or foreign material passing through or into barrier or structural floor such that full thickness of rated materials is not obtained.

E. System: Specific products and applications, classified and numbered by Underwriters Laboratories, Inc. to close specific barrier penetrations.

F. Sleeve: Metal fabrication or pipe section extended through thickness of barrier and used to permanently guard penetration. Sleeves are described as part of penetrating system in other sections and may or may not be required.

1.4 SYSTEM DESCRIPTION

A. Design Requirements

1. Fire-rated construction: Maintain barrier and structural floor fire resistance ratings including resistance to cold smoke at all penetrations.

2. Smoke barrier construction: Maintain barrier and structural floor resistance to cold smoke at all penetrations.

1.5 SUBMITTALS

A. Submit in accordance with Division 01 Section *Submittal Procedures*, unless otherwise indicated.

B. Product data: Manufacturer's specifications and technical data including the following:

1. Detailed specification of construction and fabrication.

2. Manufacturer's installation instructions.

C. Shop drawings: Indicate dimensions, description of materials and finishes, general construction, specific modifications, component connections, anchorage methods, hardware, and installation procedures, plus the following specific requirements.

1. Details of each proposed assembly identifying intended products and applicable UL system number, or UL classified devices.

2. Manufacturer or manufacturer's representative shall provide qualified engineering judgment and drawings relating to non-standard applications as needed.

D. Quality control submittals:

1. Statement of qualifications.

E. Applicators' qualifications statement:

1. List past projects indicating required experience.

1.6 QUALITY ASSURANCE

A. Installer's qualifications: Fire experienced in installation or application of systems similar in complexity to those required for this project, plus the following:

1. Acceptable to or licensed by manufacturer, State or local authority where applicable.

2. At least 2 years experience with systems.

3. Successfully completed at least 5 comparable scale projects using this system.

B. Local and State regulatory requirements: Submit forms or acceptance for proposed assemblies not conforming to specific UL Firestop System numbers, or UL classified devices.

C. Materials shall have been tested to provide fire rating at least equal to that of the construction.

1.7 DELIVERY, STORAGE, AND HANDLING

A. Packing and shipping:

1. Deliver products in original unopened packaging with legible manufacturer's identification.

2. Coordinate delivery with scheduled installation date, allow minimum storage at site.

B. Storage and protection: Store materials in a clean, dry, ventilated location. Protect from soiling, abuse, moisture and freezing when required. Follow manufacturer's instructions.

1.8 PROJECT CONDITIONS

A. Existing condition:

1. Verify existing conditions and substrates before starting work. Correct unsatisfactory conditions before proceeding.

2. Proceed with installation only after penetrations of the substrate and supporting brackets have been installed.

B. Environmental requirements:

1. Furnish adequate ventilation if using solvent.

2. Furnish forced air ventilation during installation if required by manufacturer.

3. Keep flammable materials away from sparks or flame.

4. Provide masking and drop cloths to prevent contamination of adjacent surfaces by firestopping materials.

1.9 WARRANTY

A. Submit copies of written warranty agreeing to repair or replace joint sealers which fail in joint adhesion, extrusion resistance, migration resistance, or general durability or appear to deteriorate in any other manner not clearly specified by submitted manufacturer's data as an inherent quality of the material for the exposure indicated. The warranty period shall be two (2) years from date of substantial completion unless otherwise noted.

PART 2 PRODUCTS

2.1 THROUGH-PENETRATION FIRESTOPPING OF FIRE-RATED CONSTRUCTION

A. Systems of devices listed in the UL Fire Resistance Directory under categories XHCR and XHEZ may be used, providing that it conforms to the construction type, penetrant type, annular space requirements and fire rating involved in each separate instance, and that the system be symmetrical for wall applications. Systems or devices must be asbestos-free.

1. Additional requirements: Withstand the passage of cold smoke either as an inherent property of the system, or by the use of a separate product included as a part of the UL system or device, and designed to perform this function.

2. Acceptable manufacturers and products.

a. Those listed in the UL Fire Resistance directory for the UL System involved and as further defined in the System and Applications Schedule in Part 3.6 of this section.

3. All firestopping products must be from a single manufacturer. All trades shall use products from the same manufacturer unless otherwise noted.

2.2 SMOKE-STOPPING AT SMOKE PARTITIONS

A. Through-penetration smoke-stopping: Any system complying with the requirements for through-penetration firestopping in fire-rated construction, as specified in The Systems and Applications Schedule in Part 3.6 of this section, is acceptable, provided that the system includes the specified smoke seal or will provide a smoke seal. The length of time of the fire resistance may be disregarded.

2.3 ACCESSORIES

A. Fill, void or cavity materials: As classified under category XHHW in the UL Fire Resistance Directory.

B. Forming materials: As classified under category XHKU in the UL Fire Resistance Directory.

PART 3 EXECUTION

3.1 EXAMINATION

A. Verification of conditions: Examine areas and conditions under which work is to be performed and identify conditions detrimental to proper or timely completion.

1. Verify barrier penetrations are properly sized and in suitable condition for application of materials.

2. Do not proceed until unsatisfactory conditions have been corrected.

B. Coordinate an inspection of all Mechanical Firestopping systems with the Fire Marshal prior to installation of ceilings, walls, etc.

3.2 PREPARATION

A. Clean surfaces to be in contact with penetration seal materials of dirt, grease, oil, loose materials, rust, or other substances that may affect proper fitting, adhesion, or the required fire resistance.

3.3 INSTALLATION

A. Install penetration seal materials in accordance with printed instructions of the UL Fire Resistance Directory and in accordance with manufacturer's instruction.

B. Seal holes or voids made by penetrations to ensure an effective smoke barrier.

C. Protect materials from damage on surfaces subject to traffic.

D. When large openings are created in walls or floors to permit installation of pipes, ducts, or other items, close unused portions of opening with firestopping materials tested for the application. See UL Fire Resistance Directory or Section 3.6 of this document.

E. Install smoke stopping as specified for firestopping.

3.4 FIELD QUALITY CONTROL

A. Examine penetration sealed areas to ensure proper installation before concealing or enclosing areas.

B. Keep areas of work accessible until inspection by applicable code authorities.

C. Perform under this section patching and repairing of firestopping caused by cutting or penetration by other trades.

3.5 ADJUSTING AND CLEANING

A. Clean up spills of liquid components.

B. Neatly cut and trim materials as required.

C. Remove equipment, materials and debris, leaving area in undamaged, clean condition.

3.6 SYSTEMS AND APPLICATION SCHEDULES*

PENETRATING ITEM	CONCRETE	GYPSUM	WOOD FLOOR/CEILING
Metal Pipe	CAJ1001 CP25S/L, CP25N/S CAJ1006 CS-195+, FS-195+ CAJ1007 FS-195+, 1-inch& 2-inch Wide CAJ1009 2000, 2000+, 2003 CAJ1010 2000, 2000+, 2003 CAJ1012 2000, 2000+, 2003 CAJ1013 2000, 2000+, 2003 CAJ1014 2000, 2000+, 2003 CAJ1015 2000, 2000+, 2003 CAJ1017 FD 150 CAJ1021 FD 150 CAJ1027 MPS-2+ CAJ1044 CP 25WB+ CAJ1052 CP 25S/L, CP 25N/S CAJ1058 2000, 2000+, 2003 CAJ1060 2000, 2000+, 2003 CAJ1063 2000, 2000+, 2003 CAJ1066 CP 25N/S,CP 25S/L, CP 25WB+ CAJ1091 CP 25N/S,CP 25S/L, CP 25WB+ CAJ1092 CP 25WB+ CAJ1112 FS-195+ CAJ1160 CP 25S/L, CP 25N/S CAJ1175 CP 25WB+ CAJ1176 CP 25WB+ CAJ1188 2000+ CBJ1020 CS-195+, FS-195+ CBJ1021 CS-195+, MPS-2+ CBJ1031 2001 CBJ1032 2001 FA1002 CP 25WB+ WJ1010 CP25WB+ WJ1023 2001	WL1001 CP 25 WL1002 FS-195+ WL1003 CP 25WB+,CP 25N/S WL1008 2000+ WL1009 2000+ WL1010 2000+ WL1016 CP 25WB+ WL1017 CP 25WB+,CP 25N/S WL1032 CP 25WB+,CP 25N/S WL1036 FD 150 WL1037 CS-195+,FS-195+ WL1067 CP 25N/S WL1073 CP 25WB+ WL1080 MPS2+ WL1082 2000+	FC1002 CP 25 FC1003 2000,2000+,20003 FC1006 CP 25WB+

PENETRATING ITEM	CONCRETE	GYPSUM	WOOD FLOOR/CEILING
Non-Metallic	CAJ2001 FS-195+, 1-inch& 2-inch WIDE, PPD'S CAJ2002 FS-195+ CAJ2003 CS-195+, FS-195+ CAJ2005 FS-195 CAJ2006 FS-195+ CAJ2013 FS-195+ CAJ2019 2000, 2000+, 2003 CAJ2027 FS-195+, CP 25N/S, CP 25S/L, CP 25WB+ CAJ2028 FS-195, MPS-2+ CAJ2029 FS-195+, PPD'S CAJ2030 CS-195+, FS-195+ CAJ2040 FS-195+, CP 25WB+ CAJ2044 FS-195+, CP 25N/S, CP 25S/L CP 25 WB+ CAJ2090 FS-195+ CAJ2177 FS-195+, PPD'S FA2001 FS-195+, PPD'S FS2002 CS-195+, FS-195+, MPS-2+, PPD'S FA2011 FS-195+ WJ2012 FS-195+ 1-inch WIDE	WL2002 FS-195+, PPD'S WL2003 FS-195+ WL2004 FS-195+ WL2005 FS-195+ 4' WIDE WL2006 FS-195+ WL2013 FS-195+ WL2031 CS-195+, FS-195+ WL2032 CS-195+, FS-195+ WL2033 FS-195+ WL2073 FS-195+ 1-inch WIDE	FC2002 FS-195+, PPD'S FC2007 FS-195+, PPD'S FC2008 FS-195+ FC2009 FS-195+, PPD'S FC2024 FS-195 FC2026 FS-195+ FC2028 FS-195, 1' & 2-inch WIDE, PPD'S
Insulated Metallic Pipe	CAJ5001 CP 25N/S, CP 25S/L, CP 25WB+ CAJ5002 FS-195+ CAJ5003 FS-195+ CAJ5005 MPS-2+ CAJ5009 2000+, 2003 CAJ5017 FS-195+, CP 25 CAJ5022 FS-195+ CAJ5024 FS-195+ CAJ5030 CS-195+, FS-195+ CAJ5041 2000, 2000+, 2003 CAJ5060 CP 25WB+ CAJ5074 2000+ CBJ5002 CP 25 CBJ5003 FS-195+ FA5001 FS-195+, CP 25WB+	WL5001 FS-195+ WL5002 FS-195+ WL5009 FS-195+ WL5010 FS-195+ WL5011 CP 25WB+ WL5032 2000+ WL5038 CP 25WB+ WL5039 CP 25WB+ WL5040 CP 25WB+ WL5045 CP 25WB+ WL5053 2000+	FC5002 FS-195+ FC5008 FS-195+
Miscellaneous Mechanical HVAC Ducts	CAJ7001 CP 25N/S CP 25S/L CAJ7003 CP 25WB+ CAJ7009 DUCT WRAP, BULK PUTTY		FC7001 CP 25S/L, CP 25N/S
Mixed Penetrating Items Combos	CAJ8001 CS-195+ FS-195 CAJ8003 2000, 2000+, 20003 CAJ8004 2000, 2000+, 20003 CAJ8006 2001 CAJ8013 FS-195+, CP 25 CBJ8004 CS-195, FS-195+ CBJ8005 CS-195+, MPS-2+ CBJ8008 2001 FA8001 FS-195+, CP 25WB+	WL8002 CS-195+, FS-195+	

* Underwriter's Laboratories, Inc., Fire Resistance Directory.

END OF SECTION

SECTION 079200 - JOINT SEALANTS

PART 1 - GENERAL

1.1 RELATED DOCUMENTS

A. Drawings and general provisions of the Contract, including General and Supplementary Conditions and Division 01 Specification Sections, apply to this Section.

1.2 SUMMARY

A. Section Includes:

1. Exterior joints in the following vertical surfaces and horizontal nontraffic surfaces:
   a. Perimeter joints between materials listed above and frames of doors, windows, and louvers.
   b. Other joints as indicated.

2. Interior joints in the following vertical surfaces and horizontal nontraffic surfaces.

   a. Control and expansion joints on exposed interior surfaces of exterior walls.
   b. Perimeter joints of exterior openings where indicated.
   c. Perimeter joints between interior wall surfaces and frames of interior doors and windows.
   d. Other joints as indicated.

1.3 PRECONSTRUCTION TESTING

A. Preconstruction Compatibility and Adhesion Testing: Submit to joint-sealant manufacturers, for testing indicated below, samples of materials that will contact or affect joint sealants.

1. Use ASTM C 1087 to determine whether priming and other specific joint preparation techniques are required to obtain rapid, optimum adhesion of joint sealants to joint substrates.
2. Submit not fewer than two pieces of each kind of material, including joint substrates, shims, joint-sealant backings, secondary seals, and miscellaneous materials.
3. Schedule sufficient time for testing and analyzing results to prevent delaying the Work.
4. For materials failing tests, obtain joint-sealant manufacturer's written instructions for corrective measures including use of specially formulated primers.
5. Testing will not be required if joint-sealant manufacturers submit joint preparation data that are based on previous testing, not older than 24 months, of sealant products for adhesion to, and compatibility with, joint substrates and other materials matching those submitted.

1.4 SUBMITTALS

A. Product Data: For each joint-sealant product indicated.

B. Samples for Initial Selection: For each type of product indicated.

C. Preconstruction Compatibility and Adhesion Test Reports: From sealant manufacturer, indicating the following:

1. Materials forming joint substrates and joint-sealant backings have been tested for compatibility and adhesion with joint sealants.
2. Interpretation of test results and written recommendations for primers and substrate preparation needed for adhesion.

D. Field-Adhesion Test Reports: For each sealant application tested.

1.5 QUALITY ASSURANCE

A. Installer Qualifications: Manufacturer's authorized representative who is trained and approved for installation of units required for this Project.

B. Source Limitations: Obtain each kind of joint sealant from single source from single manufacturer.

C. Products: Provide joint sealants that have been produced and installed to establish and maintain airtight and watertight continuous seals without causing staining or deterioration of joint substrates.

1.6 PROJECT CONDITIONS

A. Do not proceed with installation of joint sealants under the following conditions:

1. When ambient and substrate temperature conditions are outside limits permitted by joint-sealant manufacturer or are below 40 deg F (5 deg C).
2. When joint substrates are wet.
3. Where joint widths are less than those allowed by joint-sealant manufacturer for applications indicated.
4. Where contaminants capable of interfering with adhesion have not yet been removed from joint substrates.

PART 2 - PRODUCTS

2.1 MATERIALS, GENERAL

A. Compatibility: Provide joint sealants, backings, and other related materials that are compatible with one another and with joint substrates under conditions of service and application, as demonstrated by joint-sealant manufacturer, based on testing and field experience.

B. Liquid-Applied Joint Sealants: Comply with ASTM C 920 and other requirements indicated for each liquid-applied joint sealant specified, including those referencing ASTM C 920 classifications for type, grade, class, and uses related to exposure and joint substrates.

1. Suitability for Immersion in Liquids. Where sealants are indicated for Use I for joints that will be continuously immersed in liquids, provide products that have undergone testing according to ASTM C 1247. Liquid used for testing sealants is deionized water, unless otherwise indicated.

C. Stain-Test-Response Characteristics: Where sealants are specified to be nonstaining to porous substrates, provide products that have undergone testing according to ASTM C 1248 and have not stained porous joint substrates indicated for Project.

D. Colors of Exposed Joint Sealants: As selected by Architect from manufacturer's full range.

2.2 URETHANE JOINT SEALANTS

A. Single-Component, Nonsag, Urethane Joint Sealant: ASTM C 920, Type S, Grade NS, Class 25, for Use NT.

1. Products: Subject to compliance with requirements, provide one of the following:

a. BASF Building Systems; Sonolastic NP1.

b. Bostik, Inc.; Chem-Calk 900, Chem-Calk 915.
c. Pacific Polymers International, Inc.; Elasto-Thane 230 Type II.
d. Pecora Corporation; Dynatrol II.
e. Polymeric Systems, Inc.; Flexiprene 1000.
f. Schnee-Morehead, Inc.; Permathane SM7100, Permathane SM7108, Permathane SM7110.
g. Sika Corporation, Construction Products Division; Sikaflex - 1a.
h. Tremco Incorporated; Dymonic.

2. Uses Related to Joint Substrate: M, G, A, and as applicable to joint substrates indicated, O.

a. Use O Joint Substrates: curtain walls, copings, window and door perimeters, and glazing.

2.3 POLYSULFIDE JOINT SEALANTS

A. Single-Component, Nonsag, Polysulfide Joint Sealant: ASTM C 920, Type S, Grade NS, Class 25, for Use NT.

1. Products: Subject to compliance with requirements, provide one of the following:

a. Pacific Polymers International, Inc.; Elastoseal 230 Type I.
b. W. R. Meadows, Inc.; Deck-O-Seal One Step.

2. Uses Related to Joint Substrate: M, G, A, and as applicable to joint substrates indicated, O.

a. Use O Joint Substrates: color anodic aluminum, aluminum coated with a high-performance coating, galvanized steel, and brick.

2.4 LATEX JOINT SEALANTS

A. Latex Joint Sealant: Acrylic latex or siliconized acrylic latex, ASTM C 834, Type OP, Grade NF.

1. Products: Subject to compliance with requirements, provide one of the following:

a. BASF Building Systems; Sonolac.
b. Bostik, Inc.; Chem-Calk 600.
c. Pecora Corporation; AC-20+.
d. Schnee-Morehead, Inc.; SM 8200.
e. Tremco Incorporated; Tremflex 834.

2.5 JOINT SEALANT BACKING

A. General: Provide sealant backings of material that are nonstaining; are compatible with joint substrates, sealants, primers, and other joint fillers; and are approved for applications indicated by sealant manufacturer based on field experience and laboratory testing.

B. Cylindrical Sealant Backings: ASTM C 1330, Type C (closed-cell material with a surface skin), and of size and density to control sealant depth and otherwise contribute to producing optimum sealant performance.

2.6 MISCELLANEOUS MATERIALS

A. Primer: Material recommended by joint-sealant manufacturer where required for adhesion of sealant to joint substrates indicated, as determined from preconstruction joint-sealant-substrate tests and field tests.

B. Cleaners for Nonporous Surfaces: Chemical cleaners acceptable to manufacturers of sealants and sealant backing materials, free of oily residues or other substances capable of staining or harming joint substrates and adjacent nonporous surfaces in any way, and formulated to promote optimum adhesion of sealants to joint substrates.

C. Masking Tape: Nonstaining, nonabsorbent material compatible with joint sealants and surfaces adjacent to joints.

PART 3 - EXECUTION

3.1 EXAMINATION

A. Examine joints indicated to receive joint sealants, with Installer present, for compliance with requirements for joint configuration, installation tolerances, and other conditions affecting joint-sealant performance.

B. Proceed with installation only after unsatisfactory conditions have been corrected.

3.2 PREPARATION

A. Surface Cleaning of Joints: Clean out joints immediately before installing joint sealants to comply with joint-sealant manufacturer's written instructions and the following requirements:

1. Remove all foreign material from joint substrates that could interfere with adhesion of joint sealant, including dust, paints (except for permanent, protective coatings tested and approved for sealant adhesion and compatibility by sealant manufacturer), old joint sealants, oil, grease, waterproofing, water repellents, water, surface dirt, and frost.
2. Clean porous joint substrate surfaces by brushing, grinding, mechanical abrading, or a combination of these methods to produce a clean, sound substrate capable of developing optimum bond with joint sealants. Remove loose particles remaining after cleaning operations above by vacuuming or blowing out joints with oil-free compressed air. Porous joint substrates include the following:

    a. Concrete.
    b. Masonry.
    c. Unglazed surfaces of ceramic tile.
    d. Exterior insulation and finish systems.

3. Remove laitance and form-release agents from concrete.
4. Clean nonporous joint substrate surfaces with chemical cleaners or other means that do not stain, harm substrates, or leave residues capable of interfering with adhesion of joint sealants. Nonporous joint substrates include the following:

    a. Metal.
    b. Glass.
    c. Porcelain enamel.
    d. Glazed surfaces of ceramic tile.

B. Joint Priming: Prime joint substrates where recommended by joint-sealant manufacturer or as indicated by preconstruction joint-sealant-substrate tests or prior experience. Apply primer to comply with joint-sealant manufacturer's written instructions. Confine primers to areas of joint-sealant bond; do not allow spillage or migration onto adjoining surfaces.

C. Masking Tape: Use masking tape where required to prevent contact of sealant or primer with adjoining surfaces that otherwise would be permanently stained or damaged by such contact or by cleaning methods required to remove sealant smears. Remove tape immediately after tooling without disturbing joint seal.

3.3 INSTALLATION OF JOINT SEALANTS

A. General: Comply with joint-sealant manufacturer's written installation instructions for products and applications indicated, unless more stringent requirements apply.

B. Sealant Installation Standard: Comply with recommendations in ASTM C 1193 for use of joint sealants as applicable to materials, applications, and conditions indicated.

C. Install sealant backings of kind indicated to support sealants during application and at position required to produce cross-sectional shapes and depths of installed sealants relative to joint widths that allow optimum sealant movement capability.

1. Do not leave gaps between ends of sealant backings.
2. Do not stretch, twist, puncture, or tear sealant backings.
3. Remove absorbent sealant backings that have become wet before sealant application and replace them with dry materials.

D. Install sealants using proven techniques that comply with the following and at the same time backings are installed:

1. Place sealants so they directly contact and fully wet joint substrates.
2. Completely fill recesses in each joint configuration.
3. Produce uniform, cross-sectional shapes and depths relative to joint widths that allow optimum sealant movement capability.

E. Tooling of Nonsag Sealants: Immediately after sealant application and before skinning or curing begins, tool sealants according to requirements specified in subparagraphs below to form smooth, uniform beads of configuration indicated; to eliminate air pockets; and to ensure contact and adhesion of sealant with sides of joint.

1. Remove excess sealant from surfaces adjacent to joints.
2. Use tooling agents that are approved in writing by sealant manufacturer and that do not discolor sealants or adjacent surfaces.
3. Provide concave joint profile per Figure 8A in ASTM C 1193, unless otherwise indicated.

F. Installation of Preformed Foam Sealants: Install each length of sealant immediately after removing protective wrapping. Do not pull or stretch material. Produce seal continuity at ends, turns, and intersections of joints. For applications at low ambient temperatures, apply heat to sealant in compliance with sealant manufacturer's written instructions.

G. Acoustical Sealant Installation: At sound-rated assemblies and elsewhere as indicated, seal construction at perimeters, behind control joints, and at openings and penetrations with a continuous bead of acoustical sealant. Install acoustical sealant at both faces of partitions at perimeters and through penetrations. Comply with ASTM C 919 and with manufacturer's written recommendations.

3.4 FIELD QUALITY CONTROL

A. Field-Adhesion Testing: Field test joint-sealant adhesion to joint substrates as follows:

1. Extent of Testing: Test completed and cured sealant joints as follows:

a. Perform 3 tests for each kind of sealant and joint substrate.
b. Perform additional tests as directed by Architect if any of the three initial tests fail.

2. Test Method: Test joint sealants according to Method A, Field-Applied Sealant Joint Hand Pull Tab, in Appendix X1 in ASTM C 1193 or Method A, Tail Procedure, in ASTM C 1521.

a. For joints with dissimilar substrates, verify adhesion to each substrate separately; extend cut along one side, verifying adhesion to opposite side. Repeat procedure for opposite side.

3. Inspect tested joints and report on the following:

a. Whether sealants filled joint cavities and are free of voids.
b. Whether sealant dimensions and configurations comply with specified requirements.
c. Whether sealants in joints connected to pulled-out portion failed to adhere to joint substrates or tore cohesively. Include data on pull distance used to test each kind of product and joint substrate. Compare these results to determine if adhesion passes sealant manufacturer's field-adhesion hand-pull test criteria.

4. Record test results in a field-adhesion-test log. Include dates when sealants were installed, names of persons who installed sealants, test dates, test locations, whether joints were primed, adhesion results and percent elongations, sealant fill, sealant configuration, and sealant dimensions.
5. Repair sealants pulled from test area by applying new sealants following same procedures used originally to seal joints. Ensure that original sealant surfaces are clean and that new sealant contacts original sealant.

B. Evaluation of Field-Adhesion Test Results: Sealants not evidencing adhesive failure from testing or noncompliance with other indicated requirements will be considered satisfactory. Remove sealants that fail to adhere to joint substrates during testing or to comply with other requirements. Retest failed applications until test results prove sealants comply with indicated requirements.

3.5 CLEANING

A. Clean off excess sealant or sealant smears adjacent to joints as the Work progresses by methods and with cleaning materials approved in writing by manufacturers of joint sealants and of products in which joints occur.

3.6 PROTECTION

A. Protect joint sealants during and after curing period from contact with contaminating substances and from damage resulting from construction operations or other causes so sealants are without deterioration or damage at time of Substantial Completion. If, despite such protection, damage or deterioration occurs, cut out and remove damaged or deteriorated joint sealants immediately so installations with repaired areas are indistinguishable from original work.

END OF SECTION 079200

SECTION 079500 - EXPANSION CONTROL

PART 1 - GENERAL

1.1 RELATED DOCUMENTS

A. Drawings and general provisions of the Contract, including General and Supplementary Conditions and Division 01 Specification Sections, apply to this Section.

1.2 SUMMARY

A. This Section includes the following:

1. Architectural joint systems for building interiors.
2. Architectural joint systems for building exteriors.

1.3 DEFINITIONS

A. Maximum Joint Width: Widest linear gap a joint system tolerates and in which it performs its designed function without damaging its functional capabilities.

B. Minimum Joint Width: Narrowest linear gap a joint system tolerates and in which it performs its designed function without damaging its functional capabilities.

C. Movement Capability: Value obtained from the difference between widest and narrowest widths of a joint opening typically expressed in numerical values (mm or inches) or a percentage (plus or minus) of nominal value of joint width.

D. Nominal Joint Width: The width of the linear opening specified in practice and in which the joint system is installed.

1.4 SUBMITTALS

A. Shop Drawings: Provide the following for each joint system specified:

1. Architectural Joint System Schedule: Prepared by or under the supervision of the supplier. Include the following information in tabular form:

a. Manufacturer and model number for each joint system.
b. Joint system location cross-referenced to Drawings.
c. Nominal joint width.
d. Materials, colors, and finishes.

B. Samples for Initial Selection: For each type of joint system indicated.

1. Include manufacturer's color charts showing the full range of colors and finishes available for each exposed metal and elastomeric seal material.

1.5 QUALITY ASSURANCE

A. Installer Qualifications: An employer of workers trained and approved by manufacturer.

B. Source Limitations: Obtain all architectural joint systems through one source from a single manufacturer.

C. Product Options: Drawings indicate size, profiles, and dimensional requirements of architectural joint systems and are based on the specific systems indicated. Refer to Division 01 Section "Product Requirements."

1. Do not modify intended aesthetic effects, as judged solely by Architect, except with Architect's approval. If modifications are proposed, submit comprehensive explanatory data to Architect for review.

D. Accessibility Requirements: Comply with applicable provisions in the U.S. Architectural & Transportation Barriers Compliance Board's "Americans with Disabilities Act (ADA), Accessibility Guidelines (ADAAG)" and ICC A117.1.

1.6 COORDINATION

A. Coordinate installation of exterior wall and soffit joint systems with roof expansion assemblies to ensure that wall transitions are watertight. Roof expansion assemblies are specified in Division 07.

PART 2 - PRODUCTS

2.1 MATERIALS

A. Aluminum: ASTM B 221, Alloy 6063-T5 for extrusions; ASTM B 209, Alloy 6061-T6 for sheet and plate.

1. Apply manufacturer's standard protective coating on aluminum surfaces to be placed in contact with cementitious materials.
2. Class I, Clear Anodic Finish: AA-M12C22A41 (Mechanical Finish: nonspecular as fabricated; Chemical Finish: etched, medium matte; Anodic Coating: Architectural Class I, clear coating 0.018 mm or thicker) complying with AAMA 611.

B. Elastomeric Seals: Preformed elastomeric membranes or extrusions to be installed in metal frames.

C. Compression Seals: ASTM E 1612; preformed rectangular elastomeric extrusions having internal baffle system and designed to function under compression.

D. Strip Seals: ASTM E 1783; preformed elastomeric membrane or tubular extrusions having an internal baffle system and secured in or over a joint by a metal locking rail.

E. Cellular Foam Seals: Extruded, compressible foam designed to function under compression.

F. Moisture Barrier: Flexible elastomeric material, PVC, minimum 30 mils thick.

G. Accessories: Manufacturer's standard anchors, clips, fasteners, set screws, spacers, and other accessories compatible with material in contact, as indicated or required for complete installations.

2.2 ARCHITECTURAL JOINT SYSTEMS, GENERAL

A. General: Provide architectural joint systems of design, basic profile, materials, and operation indicated. Provide units with capability to accommodate variations in adjacent surfaces.

1. Furnish units in longest practicable lengths to minimize field splicing. Install with hairline mitered corners where joint changes direction or abuts other materials.
2. Include factory-fabricated closure materials and transition pieces, tee-joints, corners, curbs, cross-connections, and other accessories as required to provide continuous joint systems.

B. Design architectural joint systems for the following size and movement characteristics:

1. Maximum Joint Width: As indicated on Drawings.
2. Minimum Joint Width: As indicated on Drawings.
3. Movement Capability: Plus or minus 50 percent.
4. Type of Movement: Thermal and Wind sway.

2.3 ARCHITECTURAL JOINT SYSTEMS FOR BUILDING INTERIORS

A. Basis-of-Design Product: Subject to compliance with requirements, provide the products indicated on Drawings by **MM Systems Corporation** or a comparable product by one of the following:

1. Architectural Art Mfg., Inc.
2. Balco, Inc.
3. Construction Specialties, Inc.
4. JointMaster/InPro Corporation.

B. Wall-to-Wall Joint Systems:

1. Basis-of-Design Product: FSA-200.

C. Wall Corner Joint Systems:

1. Basis-of-Design Product: FSAL-200.

D. Ceiling-to-Ceiling Joint Systems:

1. Basis-of-Design Product: FSW-200.

E. Floor-to-Floor Joint Systems:

1. Basis-of-Design Product: HFEXM-2-0.5.

2.4 ARCHITECTURAL JOINT SYSTEMS FOR BUILDING EXTERIORS

A. Basis-of-Design Product: Subject to compliance with requirements, provide the products indicated on Drawings by **MM Systems Corporation** or a comparable product by one of the following:

1. Architectural Art Mfg., Inc.
2. Balco, Inc.
3. Capital Services.
4. Construction Specialties, Inc.
5. EMSEAL Joint Systems, Ltd.

6. JointMaster/InPro Corporation.
7. LymTal International, Inc.

B. Architectural Joint Systems for Exterior Walls:

1. Basis-of-Design Product: ESS-200.

2.5 FINISHES

A. Comply with NAAMM's "Metal Finishes Manual for Architectural and Metal Products" for recommendations for applying and designating finishes.

B. Protect mechanical finishes on exposed surfaces from damage by applying a strippable, temporary protective covering before shipping.

C. Appearance of Finished Work: Noticeable variations in same piece are not acceptable.

D. Colors: As selected from manufacturer’s full range of standard and custom colors (not color match).

PART 3 - EXECUTION

3.1 EXAMINATION

A. Examine surfaces where architectural joint systems will be installed for installation tolerances and other conditions affecting performance of work.

1. Proceed with installation only after unsatisfactory conditions have been corrected.

3.2 PREPARATION

A. Prepare substrates according to architectural joint system manufacturer's written instructions.

B. Repair concrete slabs and blockouts using manufacturer's recommended repair grout of compressive strength adequate for anticipated structural loadings.

C. Coordinate and furnish anchorages, setting drawings, and instructions for installing joint systems. Provide fasteners of metal, type, and size to suit type of construction indicated and to provide for secure attachment of joint systems.

D. Cast-In Frames: Coordinate and furnish frames to be cast into concrete.

3.3 INSTALLATION

A. Comply with manufacturer's written instructions for storing, handling, and installing architectural joint assemblies and materials unless more stringent requirements are indicated.

B. Metal Frames: Perform cutting, drilling, and fitting required to install joint systems.

1. Install in true alignment and proper relationship to joints and adjoining finished surfaces measured from established lines and levels.

2. Adjust for differences between actual structural gap and nominal design gap due to ambient temperature at time of installation. Notify Architect where discrepancies occur that will affect proper joint installation and performance.
3. Cut and fit ends to accommodate thermal expansion and contraction of metal without buckling of frames.
4. Locate in continuous contact with adjacent surfaces.
5. Standard-Duty Systems: Shim to level where required. Support underside of frames continuously to prevent vertical deflection when in service.
6. Heavy-Duty Systems: Repair or grout blockout as required for continuous frame support and to bring frame to proper level. Shimming is not allowed.
7. Locate anchors at interval recommended by manufacturer, but not less than 3 inches from each end and not more than 24 inches o.c.

C. Seals in Metal Frames: Install elastomeric seals and membranes in frames to comply with manufacturer's written instructions. Install with minimum number of end joints.

1. Provide in continuous lengths for straight sections.
2. Seal transitions according to manufacturer's written instructions. Vulcanize or heat-weld field-spliced joints as recommended by manufacturer.
3. Installation: Mechanically lock seals into frames or adhere to frames with adhesive or pressure-sensitive tape as recommended by manufacturer.

D. Compression Seals: Apply adhesive or lubricant adhesive as recommended by manufacturer to both sides of slabs before installing compression seals.

E. Foam Seals: Install with adhesive recommended by manufacturer.

F. Terminate exposed ends of joint assemblies with field- or factory-fabricated termination devices.

G. Water Barrier: Provide water barrier at exterior joints and where called for on Drawings. Provide drainage fittings at a maximum of 50 feet or where indicated.

3.4 PROTECTION

A. Do not remove protective covering until finish work in adjacent areas is complete. When protective covering is removed, clean exposed metal surfaces to comply with manufacturer's written instructions.

B. Protect the installation from damage by work of other Sections. Where necessary due to heavy construction traffic, remove and properly store cover plates or seals and install temporary protection over joints. Reinstall cover plates or seals prior to Substantial Completion of the Work.

END OF SECTION 079500

SECTION 081113 - HOLLOW METAL DOORS AND FRAMES

PART 1 - GENERAL

1.1 SUMMARY

A. Section Includes:

1. Standard and custom hollow metal doors and frames.
2. Light frames and glazing installed in hollow metal doors.

B. Related Sections:

1. Division 04 Section "Unit Masonry" for embedding anchors for hollow metal work into masonry construction.
2. Division 08 Section “Flush Wood Doors”.
3. Division 08 Section "Glazing" for glass view panels in hollow metal doors.
4. Division 08 Section "Door Hardware".
5. Division 09 Sections "Exterior Painting" and "Interior Painting" for field painting hollow metal doors and frames.

C. Codes and References: Comply with the version year adopted by the Authority Having Jurisdiction.

1. ANSI/SDI A250.8 - Recommended Specifications for Standard Steel Doors and Frames.
2. ANSI/SDI A250.4 - Test Procedure and Acceptance Criteria for Physical Endurance for Steel Doors, Frames, Frames Anchors and Hardware Reinforcing.
3. ANSI/SDI A250.6 - Recommended Practice for Hardware Reinforcing on Standard Steel Doors and Frames.
4. ANSI/SDI A250.10 - Test Procedure and Acceptance Criteria for Prime Painted Steel Surfaces for Steel Doors and Frames.
5. ANSI/SDI A250.11 - Recommended Erection Instructions for Steel Frames.
6. ASTM A1008 - Standard Specification for Steel Sheet, Cold-Rolled, Carbon, Structural, High-Strength Low-Alloy and High-Strength Low-Alloy with Improved Formability.
7. ASTM A653 - Standard Specification for Steel Sheet, Zinc-Coated (Galvanized) or Zinc-Iron Alloy-Coated (Galvannealed) by the Hot-Dip Process.
8. ANSI/BHMA A156.115 - Hardware Preparation in Steel Doors and Frames.
9. ANSI/SDI 122 - Installation and Troubleshooting Guide for Standard Steel Doors and Frames.
10. ANSI/NFPA 80 - Standard for Fire Doors and Fire Windows; National Fire Protection Association.
11. ANSI/NFPA 105: Standard for the Installation of Smoke Door Assemblies.
12. NFPA 252 - Standard Methods of Fire Tests of Door Assemblies; National Fire Protection Association.
13. UL 10C - Positive Pressure Fire Tests of Door Assemblies.
14. UL 1784 - Standard for Air Leakage Tests of Door Assemblies.

1.2 SUBMITTALS

A. Product Data: For each type of product indicated. Include construction details, material descriptions, core descriptions, hardware reinforcements, profiles, anchors, fire-resistance rating, and finishes.

B. Door hardware supplier is to furnish templates, template reference number and/or physical hardware to the steel door and frame supplier in order to prepare the doors and frames to receive the finish hardware items.

C. Shop Drawings: Include the following:

1. Elevations of each door design.
2. Details of doors, including vertical and horizontal edge details and metal thicknesses.
3. Frame details for each frame type, including dimensioned profiles and metal thicknesses.
4. Locations of reinforcement and preparations for hardware.
5. Details of anchorages, joints, field splices, and connections.
6. Details of accessories.
7. Details of moldings, removable stops, and glazing.
8. Details of conduit and preparations for power, signal, and control systems.

D. Samples for Verification:

1. Samples are only required by request of the architect and for manufacturers that are not current members of the Steel Door Institute.

1.3 QUALITY ASSURANCE

A. Source Limitations: Obtain hollow metal doors and frames through one source from a single manufacturer wherever possible.

B. Quality Standard: In addition to requirements specified, comply with ANSI/SDI A250.8, latest edition, "Recommended Specifications for Standard Steel Doors and Frames".

C. Fire-Rated Door Assemblies: Assemblies complying with NFPA 80 that are listed and labeled by a qualified testing agency, for fire-protection ratings indicated, based on testing at positive pressure according to NFPA 252 (neutral pressure at 40” above sill) or UL 10C.

1. Oversize Fire-Rated Door Assemblies Construction: For units exceeding sizes of tested assemblies, attach construction label certifying doors are built to standard construction requirements for tested and labeled fire rated door assemblies except for size.
2. Temperature-Rise Limit: Where indicated and at vertical exit enclosures (stairwell openings) and exit passageways, provide doors that have a maximum transmitted temperature end point of not more than 450 deg F (250 deg C) above ambient after 30 minutes of standard fire-test exposure.
3. Smoke Control Door Assemblies: Comply with NFPA 105.

a. Smoke "S" Label: Doors to bear “S” label, and include smoke and draft control gasketing applied to frame and on meeting stiles of pair doors.

D. Fire-Rated, Borrowed-Light Frame Assemblies: Assemblies complying with NFPA 80 that are listed and labeled, by a testing and inspecting agency acceptable to authorities having jurisdiction, for fire-protection ratings indicated, based on testing according to NFPA 257. Provide labeled glazing material.

E. Pre-Submittal Conference: Conduct conference in compliance with requirements in Division 01 Section "Project Meetings" with attendance by representatives of Supplier, Installer, and Contractor to review proper methods and procedures for installing hollow metal doors and frames and to verify installation of electrical knockout boxes and conduit at frames with electrified or access control hardware.

1.4 DELIVERY, STORAGE, AND HANDLING

A. Deliver hollow metal work palletized, wrapped, or crated to provide protection during transit and Project site storage. Do not use non-vented plastic.

B. Deliver welded frames with two removable spreader bars across bottom of frames, tack welded to jambs and mullions.

C. Store hollow metal work under cover at Project site. Place in stacks of five units maximum in a vertical position with heads up, spaced by blocking, on minimum 4-inch high wood blocking. Do not store in a manner that traps excess humidity.

1. Provide minimum 1/4-inch space between each stacked door to permit air circulation. Door and frames to be stacked in a vertical upright position.

1.5 PROJECT CONDITIONS

A. Field Measurements: Verify actual dimensions of openings by field measurements before fabrication.

1.6 COORDINATION

A. Coordinate installation of anchorages for hollow metal frames. Furnish setting drawings, templates, and directions for installing anchorages, including sleeves, concrete inserts, anchor bolts, and items with integral anchors. Deliver such items to Project site in time for installation.

1.7 WARRANTY

A. Special Warranty: Manufacturer's standard form in which manufacturer agrees to repair or replace doors that fail in materials or workmanship within specified warranty period.

B. Warranty includes installation and finishing that may be required due to repair or replacement of defective doors.

PART 2 - PRODUCTS

2.1 MANUFACTURERS

A. Manufacturers: Subject to compliance with requirements, provide products by one of the following:

1. CECO Door Products.
2. Curries Company.
3. Steelcraft.

2.2 MATERIALS

A. Cold-Rolled Steel Sheet: ASTM A 1008/A 1008M, Commercial Steel (CS), Type B; suitable for exposed applications.

B. Metallic-Coated Steel Sheet: ASTM A 653/A 653M, Commercial Steel (CS), Type B; with minimum G60 (Z180) or A60 (ZF180) metallic coating.

C. Frame Anchors: ASTM A 653/A 653M, Commercial Steel (CS), Commercial Steel (CS), Type B; with minimum G60 (Z180) or A60 (ZF180) metallic coating.

2.3 HOLLOW METAL DOORS

A. General: Provide 1-3/4 inch doors of design indicated, not less than thickness indicated; fabricated with smooth surfaces, without visible joints or seams on exposed faces unless otherwise indicated. Comply with ANSI/SDI A250.8 and ANSI/NAAMM HMMA 867.

B. Exterior Doors: Face sheets fabricated of commercial quality hot-dipped zinc coated steel that complies with ASTM A 653/A 653M, Coating Designation A60. Provide doors complying with requirements indicated below by referencing ANSI/SDI A250.8 for level and model and ANSI/SDI A250.4 for physical performance level:

1. Design: Flush panel.
2. Core Construction: Manufacturer's standard vertical steel-stiffener core. Minimum 22 gauge steel-stiffeners at 6 inches on-center construction attached by spot welds spaced not more than 5" on centers. Spaces between stiffeners filled with fiberglass insulation (minimum density 0.8#/cubic ft.).
3. Level/Model: Level 2 and Physical Performance Level B (Heavy Duty), Minimum 18 gauge (0.042-inch - 1.0-mm) thick steel, Model 2.
4. Top and Bottom Edges: Reinforce tops and bottoms of doors with a continuous steel channel not less than 16 gauge, extending the full width of the door and welded to the face sheet. Doors with an inverted top channel to include a steel closure channel, screw attached, with the web of the channel flush with the face sheets of the door. Plastic or composite channel fillers are not acceptable.
5. Hinge Reinforcement: Minimum 7 gauge (3/16") plate 1-1/4" x 9" or minimum 14 gauge continuous channel with pierced holes, drilled and tapped.
6. Hardware Reinforcements: Fabricate according to ANSI/SDI A250.6 with reinforcing plates from same material as door face sheets.

C. Interior Doors: Face sheets fabricated of commercial quality cold rolled steel that complies with ASTM A 1008/A 1008M. Provide doors complying with requirements indicated below by referencing ANSI/SDI A250.8 for level and model and ANSI/SDI A250.4 for physical performance level:

1. Design: Flush panel.
2. Core Construction: Manufacturer's standard kraft-paper honeycomb, or one-piece polystyrene core, securely bonded to both faces.

   a. Fire Door Core: As required to provide fire-protection and temperature-rise ratings indicated.

3. Level/Model: Level 2 and Physical Performance Level B (Heavy Duty), Minimum 18 gauge (0.042-inch - 1.0-mm) thick steel, Model 2.
4. Top and Bottom Edges: Reinforce tops and bottoms of doors with a continuous steel channel not less than 16 gauge, extending the full width of the door and welded to the face sheet.
5. Hinge Reinforcement: Minimum 7 gauge (3/16") plate 1-1/4" x 9" or minimum 14 gauge continuous channel with pierced holes, drilled and tapped.
6. Hardware Reinforcements: Fabricate according to ANSI/SDI A250.6 with reinforcing plates from same material as door face sheets.

D. Basis of Design:

1. Curries Company Polystyrene Core: 707 Series.
2. Curries Company Steel-Stiffened: 747 Series.

2.4 HOLLOW METAL FRAMES

A. General: Comply with ANSI/SDI A250.8 and with details indicated for type and profile.

B. Weatherstripped Frames: Subject to the same compliance standards and requirements as standard hollow metal frames, provide where indicated weatherstripped profiles with 1/8" integral kerf formed into the frame soffit able to receive manufacturer's listed gasket material. Available for use in both masonry and drywall construction, with fire rating up to 3 hours complying with NFPA 105, UL 1784, and ASTM E-283 Test criteria.

C. Exterior Frames: Fabricated of hot-dipped zinc coated steel that complies with ASTM A 653/A 653M, Coating Designation A60.

1. Fabricate frames with mitered or coped corners. Profile as indicated on drawings.
2. Frames: Minimum 14 gauge (0.067-inch -1.7-mm) thick steel sheet.
3. Basis of Design:

a. Curries Company – M Series.

D. Interior Frames: Fabricated from cold-rolled steel sheet that complies with ASTM A 1008/A 1008M.

1. Fabricate frames with mitered or coped corners. Profile as indicated on drawings.
2. Frames: Minimum 16 gauge (0.053-inch -1.3-mm) thick steel sheet.
3. Basis of Design:

a. Curries Company M Series.

E. Fire rated frames: Fabricate frames in accordance with NFPA 80, listed and labeled by a qualified testing agency, for fire-protection ratings indicated.

F. Hardware Reinforcement: Fabricate according to ANSI/SDI A250.6 Table 4 with reinforcement plates from same material as frames.

2.5 FRAME ANCHORS

A. Jamb Anchors:

1. Masonry Type: Adjustable strap-and-stirrup or T-shaped anchors to suit frame size, formed from A60 metallic coated material, not less than 0.042 inch thick, with corrugated or perforated straps not less than 2 inches wide by 10 inches long; or wire anchors not less than 0.177 inch thick.
2. Stud Wall Type: Designed to engage stud and not less than 0.042 inch thick.

B. Floor Anchors: Floor anchors to be provided at each jamb, formed from A60 metallic coated material, not less than 0.042 inches thick.

C. Mortar Guards: Formed from same material as frames, not less than 0.016 inches thick.

2.6 LIGHT OPENINGS AND GLAZING

A. Stops and Moldings: Provide stops and moldings around glazed lites where indicated. Form corners of stops and moldings with butted or mitered hairline joints at fabricator’s shop. Fixed and removable stops to allow multiple glazed lites each to be removed independently. Coordinate frame rabbet widths between fixed and removable stops with the type of glazing and installation indicated.

B. Moldings for Glazed Lites in Doors and Loose Stops for Glazed Lites in Frames: Minimum 20 gauge thick, fabricated from same material as door face sheet in which they are installed.

C. Fixed Frame Moldings: Formed integral with hollow metal frames, a minimum of 5/8 inch (16 mm) high unless otherwise indicated. Provide fixed frame moldings and stops on outside of exterior and on secure side of interior doors and frames.

D. Preformed Metal Frames for Light Openings: Manufacturer's standard frame formed of 0.048-inch-thick, cold rolled steel sheet; with baked enamel or powder coated finish; and approved for use in doors of fire protection rating indicated. Match pre-finished door paint color where applicable.

2.7 ACCESSORIES

A. Mullions and Transom Bars: Join to adjacent members by welding or rigid mechanical anchors.

B. Grout Guards: Formed from same material as frames, not less than 0.016 inches thick.

2.8 FABRICATION

A. Fabricate hollow metal work to be rigid and free of defects, warp, or buckle. Accurately form metal to required sizes and profiles, with minimum radius for thickness of metal. Where practical, fit and assemble units in manufacturer's plant. When shipping limitations so dictate, frames for large openings are to be fabricated in sections for splicing or splining in the field by others.

B. Tolerances: Fabricate hollow metal work to tolerances indicated in ANSI/SDI A250.8.

C. Hollow Metal Doors:

1. Exterior Doors: Provide optional weep-hole openings in bottom of exterior doors to permit moisture to escape where specified.
2. Glazed Lites: Factory cut openings in doors with applied trim or kits to fit. Factory install glazing where indicated.
3. Astragals: Provide overlapping astragals as noted in door hardware sets in Division 08 Section "Door Hardware" on one leaf of pairs of doors where required by NFPA 80 for fire-performance rating or where indicated. Extend minimum 3/4 inch beyond edge of door on which astragal is mounted.
4. Continuous Hinge Reinforcement: Provide welded continuous 12 gauge strap for continuous hinges specified in hardware sets in Division 08 Section "Door Hardware".

D. Hollow Metal Frames:

1. Shipping Limitations: Where frames are fabricated in sections due to shipping or handling limitations, provide alignment plates or angles at each joint, fabricated of same thickness metal as frames.
2. Welded Frames: Weld flush face joints continuously; grind, fill, dress, and make smooth, flush, and invisible.

   a. Welded frames are to be provided with two steel spreaders temporarily attached to the bottom of both jambs to serve as a brace during shipping and handling. Spreader bars are for bracing only and are not to be used to size the frame opening.

3. High Frequency Hinge Reinforcement: Provide high frequency hinge reinforcements at door openings 48-inches and wider with mortise butt type hinges at top hinge locations.

4. Continuous Hinge Reinforcement: Provide welded continuous 12 gauge straps for continuous hinges specified in hardware sets in Division 08 Section "Door Hardware".
5. Provide countersunk, flat- or oval-head exposed screws and bolts for exposed fasteners unless otherwise indicated for removable stops, provide security screws at exterior locations.
6. Mortar Guards: Provide guard boxes at back of hardware mortises in frames at all hinges and strike preps regardless of grouting requirements.
7. Floor Anchors: Weld anchors to bottom of jambs and mullions with at least four spot welds per anchor.
8. Jamb Anchors: Provide number and spacing of anchors as follows:

    a. Masonry Type: Locate anchors not more than 18 inches from top and bottom of frame. Space anchors not more than 32 inches o.c. and as follows:

        1) Two anchors per jamb up to 60 inches high.
        2) Three anchors per jamb from 60 to 90 inches high.
        3) Four anchors per jamb from 90 to 120 inches high.
        4) Four anchors per jamb plus 1 additional anchor per jamb for each 24 inches or fraction thereof above 120 inches high.

    b. Stud Wall Type: Locate anchors not more than 18 inches from top and bottom of frame. Space anchors not more than 32 inches o.c. and as follows:

        1) Three anchors per jamb up to 60 inches high.
        2) Four anchors per jamb from 60 to 90 inches high.
        3) Five anchors per jamb from 90 to 96 inches high.
        4) Five anchors per jamb plus 1 additional anchor per jamb for each 24 inches or fraction thereof above 96 inches high.
        5) Two anchors per head for frames above 42 inches wide and mounted in metal stud partitions.
9. Door Silencers: Except on weatherstripped or gasketed doors, drill stops to receive door silencers. Silencers to be supplied by frame manufacturer regardless if specified in Division 08 Section "Door Hardware".

E. Hardware Preparation: Factory prepare hollow metal work to receive template mortised hardware; include cutouts, reinforcement, mortising, drilling, and tapping according to the Door Hardware Schedule and templates furnished as specified in Division 08 Section "Door Hardware."

1. Locate hardware as indicated, or if not indicated, according to ANSI/SDI A250.8.
2. Reinforce doors and frames to receive non-template, mortised and surface mounted door hardware.
3. Comply with applicable requirements in ANSI/SDI A250.6 and ANSI/DHI A115 Series specifications for preparation of hollow metal work for hardware.
4. Coordinate locations of conduit and wiring boxes for electrical connections with Division 26 Sections.

2.9 STEEL FINISHES

A. Prime Finishes: Doors and frames to be cleaned, and chemically treated to insure maximum finish paint adhesion. Surfaces of the door and frame exposed to view to receive a factory applied coat of rust inhibiting shop primer.

1. Shop Primer: Manufacturer's standard, fast-curing, lead and chromate free primer complying with ANSI/SDI A250.10 acceptance criteria; recommended by primer manufacturer for substrate; and compatible with substrate and field-applied coatings.

PART 3 - EXECUTION

3.1 EXAMINATION

A. Examine substrates, areas, and conditions, with Installer present, for compliance with requirements for installation tolerances and other conditions affecting performance of the Work.

B. General Contractor to verify the accuracy of dimensions given to the steel door and frame manufacturer for existing openings or existing frames (strike height, hinge spacing, hinge back set, etc.).

C. Proceed with installation only after unsatisfactory conditions have been corrected.

3.2 PREPARATION

A. Remove welded in shipping spreaders installed at factory. Restore exposed finish by grinding, filling, and dressing, as required to make repaired area smooth, flush, and invisible on exposed faces.

B. Prior to installation, adjust and securely brace welded hollow metal frames for square, level, twist, and plumb condition.

C. Tolerances shall comply with SDI-117 "Manufacturing Tolerances Standard Steel Doors and Frames."

D. Drill and tap doors and frames to receive non-template, mortised, and surface-mounted door hardware.

3.3 INSTALLATION

A. General: Install hollow metal work plumb, rigid, properly aligned, and securely fastened in place; comply with Drawings and manufacturer's written instructions.

B. Hollow Metal Frames: Install hollow metal frames of size and profile indicated. Comply with ANSI/SDI A250.11 and NFPA 80 at fire rated openings.

1. Set frames accurately in position, plumbed, leveled, aligned, and braced securely until permanent anchors are set. After wall construction is complete and frames properly set and secured, remove temporary braces, leaving surfaces smooth and undamaged. Shim as necessary to comply with installation tolerances.
2. Floor Anchors: Provide floor anchors for each jamb and mullion that extends to floor, and secure with post-installed expansion anchors.
3. Masonry Walls: Coordinate installation of frames to allow for solidly filling space between frames and masonry with mortar.
4. Grout Requirements: Do not grout head of frames unless reinforcing has been installed in head of frame. Do not grout vertical or horizontal closed mullion members.

C. Hollow Metal Doors: Fit hollow metal doors accurately in frames, within clearances specified below. Shim as necessary.

1. Non-Fire-Rated Standard Steel Doors:

a. Jambs and Head: 1/8 inch plus or minus 1/16 inch.
b. Between Edges of Pairs of Doors: 1/8 inch plus or minus 1/16 inch.
c. Between Bottom of Door and Top of Threshold: Maximum 3/8 inch.
d. Between Bottom of Door and Top of Finish Floor (No Threshold): Maximum 3/4 inch.

2. Fire-Rated Doors: Install doors with clearances according to NFPA 80.

D. Field Glazing: Comply with installation requirements in Division 08 Section "Glazing" and with hollow metal manufacturer's written instructions.

3.4 ADJUSTING AND CLEANING

A. Final Adjustments: Check and readjust operating hardware items immediately before final inspection. Leave work in complete and proper operating condition. Remove and replace defective work, including hollow metal work that is warped, bowed, or otherwise unacceptable.

B. Remove grout and other bonding material from hollow metal work immediately after installation.

C. Prime-Coat and Painted Finish Touchup: Immediately after erection, sand smooth rusted or damaged areas of prime coat, or painted finishes, and apply touchup of compatible air drying, rust-inhibitive primer, zinc rich primer (exterior and galvanized openings) or finish paint.

END OF SECTION 081113

SECTION 081416 - FLUSH WOOD DOORS

PART 1 - GENERAL

1.1 SUMMARY

A. Section Includes:

1. Solid core doors with wood veneer faces.
2. Factory finishing wood doors.
3. Factory fitting wood doors to frames and factory machining for hardware.
4. Light frames and glazing installed in wood doors.

B. Related Sections:

1. Division 08 Section “Door Schedule”.
2. Division 08 Section "Hollow Metal Doors and Frames".
3. Division 08 Section "Glazing".
4. Division 08 Section "Door Hardware".

C. Standards and References: Comply with the version year adopted by the Authority Having Jurisdiction.

1. ANSI A117.1 - Accessible and Usable Buildings and Facilities.
2. ANSI A208.1 – Wood Particleboard.
3. Intertek Testing Service (ITS Warnock Hersey) - Certification Listings for Fire Doors.
4. NFPA 80 - Standard for Fire Doors and Fire Windows; National Fire Protection Association.
5. NFPA 252 - Standard Methods of Fire Tests of Door Assemblies; National Fire Protection Association.
6. UL 10C - Positive Pressure Fire Tests of Door Assemblies; UL 1784 - Standard for Air Leakage Tests of Door Assemblies.
7. Window and Door Manufacturers Association - WDMA I.S.1-A Architectural Wood Flush Doors.

1.2 SUBMITTALS

A. Product Data: For each type of door indicated. Include details of core and edge construction, louvers, trim for openings, and WDMA I.S.1-A classifications. Include factory finishing specifications.

B. Shop Drawings shall include:

1. Indicate location, size, and hand of each door.
2. Indicate dimensions and locations of mortises and holes for hardware.
3. Indicate dimensions and locations of cutouts.
4. Indicate requirements for veneer matching.
5. Indicate location and extent of hardware blocking.
6. Indicate construction details not covered in Product Data.
7. Indicate doors to be factory finished and finish requirements.
8. Indicate fire protection ratings for fire rated doors.

C. Samples for Initial Selection: For factory finished doors.

1. Factory finishes applied to actual door face materials, approximately 8 by 10 inches, for each material and finish. For each wood species and transparent finish, provide set of three samples showing typical range of color and grain to be expected in the finished work.

2. Corner sections of doors, 8 by 10 inches, with door faces and edges representing actual materials to be used.

    a. Provide samples for each species of veneer and core material.
    b. Finish veneer faced door samples with same materials proposed for factory finished doors.

3. Frames for light openings, 6 inches long, for each material, type, and finish required.

D. Warranty: Provide sample of manufacturer's warranty.

1.3 QUALITY ASSURANCE

A. Source Limitations: Obtain flush wood doors through one source from a single manufacturer wherever possible.

B. Quality Standard: In addition to requirements specified, comply with WDMA I.S.1-A, latest edition, "Industry Standard for Architectural Wood Flush Doors'.

C. Fire Rated Wood Doors: Doors complying with NFPA 80 that are listed and labeled by a testing and inspecting agency acceptable to authorities having jurisdiction, for fire ratings indicated, based on testing at positive pressure according to NFPA 252 (neutral pressure at 40" above sill) or UL10C.

1. Oversize Fire Rated Door Assemblies: For units exceeding sizes of tested assemblies provide manufacturer's construction label, indicating compliance to independent 3rd party certification agency's procedure, except for size.

2. Temperature Rise Limit: Where required and at vertical exit enclosures (stairwell openings) and exit passageways, provide doors that have a maximum transmitted temperature end point of not more than 450 deg F (250 deg C) above ambient after 30 minutes of standard fire test exposure.

3. Smoke Control Door Assemblies: Comply with NFPA 105.

    1) Smoke "S" Label: Doors to bear "S" label, and include smoke and draft control gasketing applied to frame and on meeting stiles of pair doors.

D. Pre-Submittal Conference: Conduct conference in compliance with requirements in Division 01 Section "Project Meetings" with attendance by representatives of Supplier, Installer, and Contractor to review proper methods and procedures for receiving, handling, and installing flush wood doors.

1.4 DELIVERY, STORAGE, AND HANDLING

A. Comply with requirements of referenced standard and manufacturer's written instructions.

B. Package pre-finished doors individually in plastic bags and wrap bundles of doors in plastic sheeting.

C. Mark each door on top rail with opening number used on Shop Drawings.

1.5 PROJECT CONDITIONS

A. Environmental Limitations: Do not deliver or install doors until spaces are enclosed and weather tight, wet work in spaces is complete and dry, and HVAC system is operating and maintaining ambient temperature and humidity conditions at occupancy levels during the remainder of the construction period.

1.6 WARRANTY

A. Warranty: Manufacturer's standard form in which manufacturer agrees to repair or replace doors that fail in materials or workmanship within specified warranty period.

1. Failures include, but are not limited to, the following:

a. Warping (bow, cup, or twist) more than 1/4 inch in a 42-by-84-inch section.
b. Telegraphing of core construction in wood face veneers exceeding 0.01 inch in a 3-inch span.

2. Warranty includes installation and finishing that may be required due to repair or replacement of defective doors.

3. Warranty Period for Solid Core Interior Doors: Life of installation.

PART 2 - PRODUCTS

2.1 DOOR CONSTRUCTION – GENERAL

A. WDMA I.S.1-A Performance Grade: Extra Heavy Duty; Aesthetic Grade: Premium.

B. Fire Rated Doors: Provide construction and core as needed to provide fire ratings indicated.

1. Category A Edge Construction: Provide fire rated door edge construction with intumescent seals concealed by outer stile (Category A) at 45, 60, and 90 minute rated doors. Comply with specified requirements for exposed edges.

2. Pairs: Provide stiles with concealed intumescent seals. Comply with specified requirements for exposed edges.

a. Provide fire retardant stiles that are listed and labeled for applications indicated without formed steel edges and astragals.

b. Where required for concealed hardware, provide formed steel edges and astragals with intumescent seals. Finish steel edges and astragals with baked enamel.

2.2 CORE CONSTRUCTION

A. Particleboard Core Doors:

1. Particleboard: Wood fiber based materials complying with ANSI A208.1 Particleboard standard. Grade LD-2.

2. Adhesive: Fully bonded construction using Polyurethane (PUR) glue.

3. Blocking: As indicated under article “Blocking”.

2.3 BLOCKING

A. Non-Fire-Rated Doors:

1. Provide blocking as indicated below:

B. Fire Rated Doors:

1. Provide blocking as indicated below:

a. HB1: 5 inch in doors indicated to have closers and overhead stops.

2.4 VENEERED DOORS FOR TRANSPARENT FINISH

A. Manufacturers: Subject to compliance with requirements, provide products by one of the following:

1. Eggers Industries: Premium Series.
2. Graham: GPD Series.
3. Marshfield: Signature Series.

B. Interior Solid Core Doors:

1. Grade: Premium.

2. Faces: Veneer grades as noted below; veneer minimum 1/50-inch (0.5mm) thickness at moisture content of 12% or less.

a. Rotary Sliced Select White Birch, A grade faces.

3. Match between Veneer Leaves: Book match.

4. Assembly of Veneer Leaves on Door Faces:

a. Running Match.

5. Pair and Set Match: Provide for doors hung in same opening or separated only by mullions.

6. Vertical Edges: Matching same species as faces. Wood or composite material, one piece, laminated, or veneered. Minimum requirements per WDMA section P-1, Performance Standards for Architectural Wood Flush Doors.

7. Horizontal Edges: Solid wood or structural composite material meeting the minimum requirements per WDMA section P-1, Performance Standards for Architectural Wood Flush Doors

8. Construction: Five plies. Stiles and rails are bonded to core, then entire unit sanded before applying face veneers.

9. At doors over 40% of the face cut-out for lights and or louvers, furnish engineered composite lumber core.

2.5 DOORS FOR OPAQUE FINISH

A. Manufacturers: Subject to compliance with requirements, provide products by one of the following:

1. Eggers Industries: Custom Series.
2. Graham: GCD Series.
3. Marshfield: Impressions Series.

B. Interior Solid Core Doors:

1. Grade: Custom.

2. Faces:

a. Mill Option Hardwood: Face veneer minimum 1/50-inch (0.5mm) thickness at moisture content of 12% or less.

3. Vertical Edges: Any closed grain hardwood. Wood or composite material, one piece, laminated, or veneered. Minimum requirements per WDMA section P-1, Performance Standards for Architectural Wood Flush Doors.

4. Horizontal Edges: Solid wood or structural composite material meeting the minimum requirements per WDMA section P-1, Performance Standards for Architectural Wood Flush Doors

5. Construction: Five plies. Stiles and rails are bonded to core, then entire unit sanded before applying face veneers.

2.6 LIGHT FRAMES AND GLAZING

A. Metal Frames for Light Openings in Fire Rated Doors over 20-minute Rating: Manufacturer's standard frame formed of 0.048-inch-thick, cold rolled steel sheet; with baked enamel or powder coated finish; and approved for use in doors of fire protection rating indicated.

1. Manufacturers:

a. Air Louver.
b. All Metal Stamping.
c. Anemostat.
d. Pemko.

B. Glazing: Comply with installation requirements in Division 08 Section "Glazing" and with the flush wood door manufacturer's written instructions.

2.7 FABRICATION

A. Factory fit doors to suit frame opening sizes indicated.
1. Comply with requirements in NFPA 80 for fire rated doors.
2. Undercut: As required per manufacturer’s templates and sill condition.

B. Factory machine doors for hardware that is not surface applied. Comply with final hardware schedules, door frame Shop Drawings, DHI A115-W series standards, and hardware templates.

1. Coordinate with hardware mortises in metal frames to verify dimensions and alignment before factory machining.
2. Metal Astragals: Factory machine astragals and formed steel edges for hardware for pairs of fire rated doors.

C. Openings: Cut and trim openings through doors in factory.

1. Light Openings: Trim openings with moldings of material and profile indicated.
2. Glazing: Comply with applicable requirements in Division 08 Section "Glazing."

D. Electrical Raceways: Provide flush wood doors receiving electrified hardware with concealed wiring harness and standardized Molex™ plug connectors on both ends to accommodate up to twelve wires. Coordinate connectors on end of the wiring harness to plug directly into the electrified hardware and the through wire transfer hardware or wiring harness specified in hardware sets in Division 08 "Door Hardware". Wire nut connections are not acceptable.

2.8 FACTORY FINISHING

A. General: Comply with referenced quality standard for factory finishing. Complete fabrication, including fitting doors for openings and machining for hardware that is not surface applied, before finishing.

1. Finish faces, all four edges, edges of cutouts, and mortises. Stains and fillers may be omitted on top and bottom edges, edges of cutouts, and mortises.

B. Transparent Finish: Provide a clear protective coating over the wood veneer allowing the natural color and grain of the selected wood species to provide the appearance specified. Stain is applied to the wood surface underneath the transparent finish to add color and design flexibility.

1. Finish: Meet or exceed WDMA I.S. 1A TR8 UV Cured Acrylated Polyester finish performance requirements.
2. Staining:

a. As selected by Architect from manufacturer's full range.
b. Custom stain to match architect’s sample.

3. Sheen: Satin.

PART 3 - EXECUTION

3.1 EXAMINATION

A. Examine doors and installed door frames before hanging doors.

1. Verify that frames comply with indicated requirements for type, size, location, and swing characteristics and have been installed with level heads and plumb jambs.
2. Reject doors with defects.

B. Proceed with installation only after unsatisfactory conditions have been corrected.

3.2 INSTALLATION

A. Hardware: For installation, see Division 8 Section "Door Hardware."

B. Installation Instructions: Install doors and frames to comply with manufacturer's written instructions and the referenced quality standard, and as indicated.

1. Install fire rated doors in corresponding fire rated frames according to NFPA 80.

C. Factory Fitted Doors: Align in frames for uniform clearance at each edge.

D. Factory Finished Doors: Restore finish before installation if fitting or machining is required at Project site.

E. Field modifications to doors shall not be permitted, except those specifically allowed by manufacturer or fire rating requirements.

3.3 ADJUSTING

A. Operation: Re-hang or replace doors that do not swing or operate freely.

B. Finished Doors: Replace doors that do not comply with requirements. Doors may be repaired or refinished if work complies with requirements and shows no evidence of repair or refinishing.

END OF SECTION 081416

SECTION 084113 - ALUMINUM-FRAMED ENTRANCES AND STOREFRONTS

PART 1 - GENERAL

1.1 SUMMARY

A. Section Includes:

1. Exterior storefront framing.
2. Storefront framing for punched openings.
3. Exterior and interior manual-swing entrance doors and door frame units.

1.2 PERFORMANCE REQUIREMENTS

A. General Performance: Aluminum-framed systems shall withstand the effects of the following performance requirements without exceeding performance criteria or failure due to defective manufacture, fabrication, installation, or other defects in construction:

1. Movements of supporting structure indicated on Drawings including, but not limited to, story drift and deflection from uniformly distributed and concentrated live loads.
2. Dimensional tolerances of building frame and other adjacent construction.
3. Failure includes the following:

   a. Deflection exceeding specified limits.
   b. Thermal stresses transferring to building structure.
   c. Framing members transferring stresses, including those caused by thermal and structural movements to glazing.
   d. Noise or vibration created by wind and by thermal and structural movements.
   e. Loosening or weakening of fasteners, attachments, and other components.
   f. Failure of operating units.

B. Delegated Design: Design aluminum-framed systems, including comprehensive engineering analysis by a qualified professional engineer, using performance requirements and design criteria indicated.

C. Wind Loads: Determine design wind loads applicable to Project from basic wind speed indicated in miles per hour at 33 feet above grade, according to ASCE 7, Section 6.5, “Method 2-Analytical Procedure,” based on mean roof heights above grade indicated on Drawings

   a. Basic Wind Speed: 90 mph.
   b. Importance Factor: III.
   c. Exposure Category: B.

D. Deflection of Framing Members:

1. Deflection Normal to Wall Plane: Limited to edge of glass in a direction perpendicular to glass plane shall not exceed L/175 of the glass edge length for each individual glazing lite or an amount that restricts edge deflection of individual glazing lites to 3/4 inch (19 mm), whichever is less.
2. Deflection Parallel to Glazing Plane: Limited to L/360 of clear span or 1/8 inch (3.2 mm), whichever is smaller.

E. Structural-Test Performance: Provide aluminum-framed systems tested according to ASTM E 330 as follows:

1. When tested at 150 percent of positive and negative wind-load design pressures, systems, including anchorage, do not evidence material failures, structural distress, and permanent deformation of main framing members exceeding 0.2 percent of span.
2. Test Durations: 10 seconds.

F. Air Infiltration: Provide aluminum-framed systems with maximum air leakage through fixed glazing and framing areas of 0.06 cfm/sq. ft. (0.03 L/s per sq. m) of fixed wall area when tested according to ASTM E 283 at a minimum static-air-pressure difference of 6.24 lbf/sq. ft. (300 Pa).

G. Water Penetration under Static Pressure: Provide aluminum-framed systems that do not evidence water penetration through fixed glazing and framing areas when tested according to ASTM E 331 at a minimum static-air-pressure difference of 20 percent of positive wind-load design pressure, but not less than 6.24 lbf/sq. ft. (300 Pa).

1.3 SUBMITTALS

A. Product Data: For each type of product indicated.

B. Shop Drawings: For aluminum-framed systems. Include plans, elevations, sections, details, and attachments to other work.

C. Samples: For each type of exposed finish required.

D. Coordination Submittal:

1. Entrance Door Hardware Schedule: Prepared under Division 08 Section “Door Hardware.”

E. Delegated-Design Submittal: For aluminum-framed systems indicated to comply with performance requirements and design criteria, including analysis data signed and sealed by the qualified professional engineer responsible for their preparation.

F. Warranties: Sample of special warranties.

1.4 QUALITY ASSURANCE

A. Installer Qualifications: Manufacturer's authorized representative who is trained and approved for installation of units required for this Project.

B. Testing Agency Qualifications: Qualified according to ASTM E 699 for testing indicated.

C. Engineering Responsibility: Prepare data for aluminum-framed systems, including Shop Drawings, based on testing and engineering analysis of manufacturer's standard units in systems similar to those indicated for this Project.

D. Accessible Entrances: Comply with applicable provisions in the U.S. Architectural & Transportation Barriers Compliance Board's ADA-ABA Accessibility Guidelines and ICC/ANSI A117.1.

E. Source Limitations for Aluminum-Framed Systems: Obtain from single source from single manufacturer.

1.5 WARRANTY

A. Special Warranty: Manufacturer's standard form in which manufacturer agrees to repair or replace components of aluminum-framed systems that do not comply with requirements or that fail in materials or workmanship within specified warranty period.

1. Warranty Period: 10 years from date of Substantial Completion.

B. Special Finish Warranty: Manufacturer's standard form in which manufacturer agrees to repair or replace components on which finishes do not comply with requirements or that fail in materials or workmanship within specified warranty period. Warranty does not include normal weathering.

1. Warranty Period: 10 years from date of Substantial Completion.

PART 2 - PRODUCTS

2.1 MANUFACTURERS

A. Basis-of-Design Product: Subject to compliance with requirements, provide **EFCO Corporation; System 403 Thermal Flush – Glazed Screw Spline Storefront**, or comparable product by one of the following:

1. Kawneer North America; Trifab 451T.
2. Oldcastle Building Envelope; Series 3000 thermal.
3. Wausau Window and Wall Systems; 14000 series, thermal.
4. YKK AP America Inc.; YES45 TU.

B. Provide for systems identified as **AL** and **SF** on drawings.

2.2 MATERIALS

A. Aluminum: Alloy and temper recommended by manufacturer for type of use and finish indicated.

1. Sheet and Plate: ASTM B 209 (ASTM B 209M).
2. Extruded Bars, Rods, Profiles, and Tubes: ASTM B 221 (ASTM B 221M).
3. Extruded Structural Pipe and Tubes: ASTM B 429.
4. Structural Profiles: ASTM B 308/B 308M.
5. Welding Rods and Bare Electrodes: AWS A5.10/A5.10M.

B. Steel Reinforcement: Manufacturer's standard zinc-rich, corrosion-resistant primer, complying with SSPC-PS Guide No. 12.00; applied immediately after surface preparation and pretreatment. Select surface preparation methods according to recommendations in SSPC-SP COM and prepare surfaces according to applicable SSPC standard.

1. Structural Shapes, Plates, and Bars: ASTM A 36/A 36M.
2. Cold-Rolled Sheet and Strip: ASTM A 1008/A 1008M.
3. Hot-Rolled Sheet and Strip: ASTM A 1011/A 1011M.

2.3 FRAMING SYSTEMS

A. Framing Members: Manufacturer's standard extruded-aluminum framing members of thickness required and reinforced as required to support imposed loads.

1. Construction: Thermally improved.
2. Glazing System: Retained mechanically with gaskets on four sides.
3. Glazing Plane: Center.

B. Brackets and Reinforcements: Manufacturer's standard high-strength aluminum with nonstaining, nonferrous shims for aligning system components.

C. Fasteners and Accessories: Manufacturer's standard corrosion-resistant, nonstaining, nonbleeding fasteners and accessories compatible with adjacent materials.

1. Use self-locking devices where fasteners are subject to loosening or turning out from thermal and structural movements, wind loads, or vibration.
2. Reinforce members as required to receive fastener threads.
3. Use exposed fasteners with countersunk Phillips screw heads, finished to match framing system.

D. Concrete and Masonry Inserts: Hot-dip galvanized cast-iron, malleable-iron, or steel inserts, complying with ASTM A 123/A 123M or ASTM A 153/A 153M.

E. Concealed Flashing: Manufacturer's standard corrosion-resistant, nonstaining, nonbleeding flashing compatible with adjacent materials.

F. Framing System Gaskets and Sealants: Manufacturer's standard, recommended by manufacturer for joint type.

2.4 GLAZING SYSTEMS

A. Glazing: As specified in Division 08 Section "Glazing."

B. Glazing Gaskets: Manufacturer's standard compression types; replaceable, molded or extruded, of profile and hardness required to maintain watertight seal.

C. Spacers and Setting Blocks: Manufacturer's standard elastomeric type.

2.5 ENTRANCE DOOR SYSTEMS

A. Entrance Doors: Manufacturer's standard heavy-duty wide stile glazed entrance doors for manual-swing operation.

1. Door Construction: 2-inch (51-mm) overall thickness, with minimum 0.125-inch- (3.2-mm-) thick, extruded-aluminum tubular rail and stile members. Mechanically fasten corners with reinforcing brackets that are deeply penetrated and fillet welded or that incorporate concealed tie rods.

   a. Thermal Construction: High-performance plastic connectors separate aluminum members exposed to the exterior from members exposed to the interior.

2. Door Design: As indicated on drawings.

a. Accessible Doors: Smooth surfaced for width of door in area within 10 inches (255 mm) above floor or ground plane.

3. Glazing Stops and Gaskets: Beveled, snap-on, extruded-aluminum stops and preformed gaskets.

a. Provide nonremovable glazing stops on outside of door.

B. Entrance Door Hardware: As specified in Division 08 Section "Door Hardware."

2.6 ACCESSORY MATERIALS

A. Bituminous Paint: Cold-applied, asphalt-mastic paint complying with SSPC-Paint 12 requirements except containing no asbestos; formulated for 30-mil (0.762-mm) thickness per coat.

2.7 FABRICATION

A. Form or extrude aluminum shapes before finishing.

B. Weld in concealed locations to greatest extent possible to minimize distortion or discoloration of finish. Remove weld spatter and welding oxides from exposed surfaces by descaling or grinding.

C. Framing Members, General: Fabricate components that, when assembled, have the following characteristics:

1. Profiles that are sharp, straight, and free of defects or deformations.
2. Accurately fitted joints with ends coped or mitered.
3. Means to drain water passing joints, condensation within framing members, and moisture migrating within the system to exterior.
4. Physical and thermal isolation of glazing from framing members.
5. Accommodations for thermal and mechanical movements of glazing and framing to maintain required glazing edge clearances.
6. Provisions for field replacement of glazing from interior for vision glass and exterior for spandrel glazing.
7. Fasteners, anchors, and connection devices that are concealed from view to greatest extent possible.

D. Mechanically Glazed Framing Members: Fabricate for flush glazing without projecting stops.

E. Entrance Door Frames: Reinforce as required to support loads imposed by door operation and for installing entrance door hardware.

F. Entrance Doors: Reinforce doors as required for installing entrance door hardware.

G. Entrance Door Hardware Installation: Factory install entrance door hardware to the greatest extent possible. Cut, drill, and tap for factory-installed entrance door hardware before applying finishes.

H. After fabrication, clearly mark components to identify their locations in Project according to Shop Drawings.

2.8 ALUMINUM FINISHES

A. High-Performance Organic Finish: 2-coat fluoropolymer finish complying with AAMA 2605 and containing not less than 70 percent PVDF resin by weight in color coat.

1. Color and Gloss: As selected by Architect from manufacturer's full range.

PART 3 - EXECUTION

3.1 INSTALLATION

A. General:

1. Comply with manufacturer's written instructions.
2. Do not install damaged components.
3. Fit joints to produce hairline joints free of burrs and distortion.
4. Rigidly secure non-movement joints.
5. Install anchors with separators and isolators to prevent metal corrosion and electrolytic deterioration.
6. Seal joints watertight unless otherwise indicated.

B. Metal Protection:

1. Where aluminum will contact dissimilar metals, protect against galvanic action by painting contact surfaces with primer or applying sealant or tape, or by installing nonconductive spacers as recommended by manufacturer for this purpose.
2. Where aluminum will contact concrete or masonry, protect against corrosion by painting contact surfaces with bituminous paint.

C. Install components to drain water passing joints, condensation occurring within framing members, and moisture migrating within the system to exterior.

D. Set continuous sill members and flashing in full sealant bed as specified in Division 07 Section "Joint Sealants" to produce weathertight installation.

E. Install components plumb and true in alignment with established lines and grades, and without warp or rack.

F. Install glazing as specified in Division 08 Section "Glazing."

G. Entrance Doors: Install doors to produce smooth operation and tight fit at contact points.

1. Exterior Doors: Install to produce weathertight enclosure and tight fit at weather stripping.

3.2 FIELD QUALITY CONTROL

A. Testing Agency: Engage a qualified independent testing and inspecting agency to perform field tests and inspections.

B. Testing Services: Testing and inspecting of representative areas to determine compliance of installed systems with specified requirements shall take place as follows. Do not proceed with installation of the next area until test results for previously completed areas show compliance with requirements.

1. Water Spray Test: Before installation of interior finishes has begun, areas designated by Architect shall be tested according to AAMA 501.2 and shall not evidence water penetration.

    a. Test Area: A minimum area of 75 feet (23 m) by 1 story of aluminum-framed systems.

C. Repair or remove work if test results and inspections indicate that it does not comply with specified requirements.

D. Additional testing and inspecting, at Contractor's expense, will be performed to determine compliance of replaced or additional work with specified requirements.

E. Aluminum-framed assemblies will be considered defective if they do not pass tests and inspections.

F. Prepare test and inspection reports.

END OF SECTION 084113

SECTION 087100 – DOOR HARDWARE

PART 1 - GENERAL

1.1 SUMMARY

A. This Section includes commercial door hardware for the following:

1. Swinging doors.
2. Other doors to the extent indicated.

B. Door hardware includes, but is not necessarily limited to, the following:

1. Mechanical door hardware.
2. Cylinders specified for doors in other sections.

C. Related Sections:

1. Division 08 Section “Hollow Metal Doors and Frames”.
2. Division 08 Section “Flush Wood Doors”.

D. Codes and References: Comply with the version year adopted by the Authority Having Jurisdiction.

1. ANSI A117.1 - Accessible and Usable Buildings and Facilities.
2. ICC/IBC - International Building Code.
3. NFPA 70 - National Electrical Code.
4. NFPA 80 - Fire Doors and Windows.
5. NFPA 101 - Life Safety Code.
6. NFPA 105 - Installation of Smoke Door Assemblies.
7. State Building Codes, Local Amendments.

E. Standards: All hardware specified herein shall comply with the following industry standards:

1. ANSI/BHMA Certified Product Standards - A156 Series
2. UL10C – Positive Pressure Fire Tests of Door Assemblies

1.2 SUBMITTALS

A. Product Data: Manufacturer's product data sheets including installation details, material descriptions, dimensions of individual components and profiles, operational descriptions and finishes.

B. Door Hardware Schedule: Prepared by or under the supervision of supplier, detailing fabrication and assembly of door hardware, as well as procedures and diagrams. Coordinate the final Door Hardware Schedule with doors, frames, and related work to ensure proper size, thickness, hand, function, and finish of door hardware.

1. Format: Comply with scheduling sequence and vertical format in DHI's "Sequence and Format for the Hardware Schedule."

2. Organization: Organize the Door Hardware Schedule into door hardware sets indicating complete designations of every item required for each door or opening. Organize door hardware sets in same order as in the Door Hardware Sets at the end of Part 3. Submittals that do not follow the same format and order as the Door Hardware Sets will be rejected and subject to resubmission.

3. Content: Include the following information:

   a. Type, style, function, size, label, hand, and finish of each door hardware item.
   b. Manufacturer of each item.
   c. Fastenings and other pertinent information.
   d. Location of door hardware set, cross-referenced to Drawings, both on floor plans and in door and frame schedule.
   e. Explanation of abbreviations, symbols, and codes contained in schedule.
   f. Mounting locations for door hardware.
   g. Door and frame sizes and materials.

4. Submittal Sequence: Submit the final Door Hardware Schedule at earliest possible date, particularly where approval of the Door Hardware Schedule must precede fabrication of other work that is critical in the Project construction schedule. Include Product Data, Samples, Shop Drawings of other work affected by door hardware, and other information essential to the coordinated review of the Door Hardware Schedule.

C. Keying Schedule: Prepared under the supervision of the Owner, separate schedule detailing final keying instructions for locksets and cylinders in writing. Include keying system explanation, door numbers, key set symbols, hardware set numbers and special instructions. Owner to approve submitted keying schedule prior to the ordering of permanent cylinders.

D. Operating and Maintenance Manuals: Provide manufacturers operating and maintenance manuals for each item comprising the complete door hardware installation in quantity as required in Division 01, Closeout Submittals. The manual to include the name, address, and contact information of the manufacturers providing the hardware and their nearest service representatives. The final copies delivered after completion of the installation test to include "as built" modifications made during installation, checkout, and acceptance.

E. Warranties and Maintenance: Special warranties and maintenance agreements specified in this Section.

1.3 QUALITY ASSURANCE

A. Manufacturers Qualifications: Engage qualified manufacturers with a minimum 5 years of documented experience in producing hardware and equipment similar to that indicated for this Project and that have a proven record of successful in-service performance.

B. Installer Qualifications: Installers, trained by the primary product manufacturers, with a minimum 3 years documented experience installing both standard and electrified builders hardware similar in material, design, and extent to that indicated for this Project and whose work has resulted in construction with a record of successful in-service performance.

C. Door Hardware Supplier Qualifications: Experienced commercial door hardware distributors with a minimum 5 years documented experience supplying both mechanical and electromechanical hardware installations comparable in material, design, and extent to that indicated for this Project. Supplier recognized as a factory direct distributor in good standing by the manufacturers of the primary materials with a warehousing facility in Project's vicinity. Supplier to have on staff a certified Architectural

Hardware Consultant (AHC) available during the course of the Work to consult with Contractor, Architect, and Owner concerning both standard and electromechanical door hardware and keying.

1. Scheduling Responsibility: Preparation of door hardware and keying schedules.

D. Source Limitations: Obtain each type and variety of Door Hardware specified in this Section from a single source, qualified supplier unless otherwise indicated.

1. Electrified modifications or enhancements made to a source manufacturer's product line by a secondary or third party source will not be accepted.

2. Provide electromechanical door hardware from the same manufacturer as mechanical door hardware, unless otherwise indicated.

E. Regulatory Requirements: Comply with NFPA 70, NFPA 80, NFPA 101 and ANSI A117.1 requirements and guidelines as directed in the model building code including, but not limited to, the following:

1. NFPA 70 "National Electrical Code", including electrical components, devices, and accessories listed and labeled as defined in Article 100 by a testing agency acceptable to authorities having jurisdiction, and marked for intended use.

2. Where indicated to comply with accessibility requirements, comply with Americans with Disabilities Act (ADA), "Accessibility Guidelines for Buildings and Facilities (ADAAG)," ANSI A117.1 as follows:

a. Handles, Pulls, Latches, Locks, and other Operating Devices: Shape that is easy to grasp with one hand and does not require tight grasping, tight pinching, or twisting of the wrist.
b. Door Closers: Comply with the following maximum opening-force requirements indicated:

1) Interior Hinged Doors: 5 lbf applied perpendicular to door.
2) Fire Doors: Minimum opening force allowable by authorities having jurisdiction.

c. Thresholds: Not more than 1/2 inch high. Bevel raised thresholds with a slope of not more than 1:2.

3. NFPA 101: Comply with the following for means of egress doors:

a. Latches, Locks, and Exit Devices: Not more than 15 lbf to release the latch. Locks shall not require the use of a key, tool, or special knowledge for operation.

b. Thresholds: Not more than 1/2 inch high.

4. Fire-Rated Door Assemblies: Provide door hardware for assemblies complying with NFPA 80 that are listed and labeled by a testing and inspecting agency acceptable to authorities having jurisdiction, for fire ratings indicated, based on testing according to NFPA 252 (neutral pressure at 40" above sill) or UL-10C.

a. Test Pressure: Positive pressure labeling.

F. Each unit to bear third party permanent label demonstrating compliance with the referenced standards.

G. Keying Conference: Conduct conference to comply with requirements in Division 01 Section "Project Meetings." Keying conference to incorporate the following criteria into the final keying schedule document:

1. Function of building, purpose of each area and degree of security required.
2. Plans for existing and future key system expansion.
3. Requirements for key control storage and software.
4. Installation of permanent keys, cylinder cores and software.
5. Address and requirements for delivery of keys.

H. Pre-Submittal Conference: Conduct coordination conference in compliance with requirements in Division 01 Section "Project Meetings" with attendance by representatives of Supplier(s), Installer(s), and Contractor(s) to review proper methods and the procedures for receiving, handling, and installing door hardware.

1. Prior to installation of door hardware, conduct a project specific training meeting to instruct the installing contractors' personnel on the proper installation and adjustment of their respective products. Product training to be attended by installers of door hardware (including electromechanical hardware) for aluminum, hollow metal and wood doors. Training will include the use of installation manuals, hardware schedules, templates and physical product samples as required.
2. Review and finalize construction schedule and verify availability of materials.

I. At completion of installation, provide written documentation that components were applied to manufacturer's instructions and recommendations and according to approved schedule.

1.4 DELIVERY, STORAGE, AND HANDLING

A. Inventory door hardware on receipt and provide secure lock-up and shelving for door hardware delivered to Project site. Do not store electronic access control hardware, software or accessories at Project site without prior authorization.

B. Tag each item or package separately with identification related to the final Door Hardware Schedule, and include basic installation instructions with each item or package.

C. Deliver, as applicable, permanent keys, cylinders, cores, access control credentials, software and related accessories directly to Owner via registered mail or overnight package service. Instructions for delivery to the Owner shall be established at the "Keying Conference".

1.5 COORDINATION

A. Templates: Obtain and distribute to the parties involved templates for doors, frames, and other work specified to be factory prepared for installing standard and electrified hardware. Check Shop Drawings of other work to confirm that adequate provisions are made for locating and installing hardware to comply with indicated requirements.

B. Door and Frame Preparation: Related Division 08 Sections (Steel, Aluminum and Wood) doors and corresponding frames are to be prepared, reinforced and pre-wired (if applicable) to receive the installation of the specified electrified, monitoring, signaling and access control system hardware without additional in-field modifications.

1.6 WARRANTY

A. General Warranty: Reference Division 01, General Requirements. Special warranties specified in this Article shall not deprive Owner of other rights Owner may have under other provisions of the Contract

Documents and shall be in addition to, and run concurrent with, other warranties made by Contractor under requirements of the Contract Documents.

B. Warranty Period: Written warranty, executed by manufacturer(s), agreeing to repair or replace components of standard and electrified door hardware that fails in materials or workmanship within specified warranty period after final acceptance by the Owner. Failures include, but are not limited to, the following:

1. Structural failures including excessive deflection, cracking, or breakage.
2. Faulty operation of the hardware.
3. Deterioration of metals, metal finishes, and other materials beyond normal weathering.

C. Standard Warranty Period: One year from date of Substantial Completion, unless otherwise indicated.

D. Special Warranty Periods:

1. Ten years for mortise locks and latches.
2. Seven years for heavy duty cylindrical (bored) locks and latches.
3. Five years for exit hardware.
4. Twenty five years for manual surface door closers.

1.7 MAINTENANCE SERVICE

A. Maintenance Tools and Instructions: Furnish a complete set of specialized tools and maintenance instructions as needed for Owner's continued adjustment, maintenance, and removal and replacement of door hardware.

B. Continuing Service: Beginning at Substantial Completion, and running concurrent with the specified warranty period, provide continuous (6) months full maintenance including repair and replacement of worn or defective components, lubrication, cleaning, and adjusting as required for proper door opening operation. Provide parts and supplies as used in the manufacture and installation of original products.

PART 2 - PRODUCTS

2.1 SCHEDULED DOOR HARDWARE

A. General: Provide door hardware for each door to comply with requirements in Door Hardware Sets and each referenced section that products are to be supplied under.

1. Designations: Requirements for quantity, item, size, finish or color, grade, function, and other distinctive qualities of each type of door hardware are indicated in the Door Hardware Sets at the end of Part 3. Products are identified by using door hardware designations, as follows:

a. Named Manufacturer's Products: Product designation and manufacturer are listed for each door hardware type required for the purpose of establishing requirements. Manufacturers' names are abbreviated in the Door Hardware Schedule.

2. Products furnished, but not installed, under this Section include the following. Coordinating, purchasing, delivering, and scheduling remain requirements of this Section.

a. Permanent cylinders, cores, and keys to be installed by Owner.

B. Substitutions: Requests for substitution and product approval for inclusive mechanical and electromechanical door hardware in compliance with the specifications must be submitted in writing and in accordance with the procedures and time frames outlined in Division 01, Substitution Procedures. Approval of requests is at the discretion of the architect, owner, and their designated consultants.

2.2 HANGING DEVICES

A. Hinges: ANSI/BHMA A156.1 certified butt hinges with number of hinge knuckles as specified in the Door Hardware Sets.

1. Quantity: Provide the following hinge quantity, unless otherwise indicated:

   a. Two Hinges: For doors with heights up to 60 inches.
   b. Three Hinges: For doors with heights 61 to 90 inches.
   c. Four Hinges: For doors with heights 91 to 120 inches.
   d. For doors with heights more than 120 inches, provide 4 hinges, plus 1 hinge for every 30 inches of door height greater than 120 inches.

2. Hinge Size: Provide the following, unless otherwise indicated, with hinge widths sized for door thickness and clearances required:

   a. Widths up to 3’0”: 4-1/2” standard or heavy weight as specified.
   b. Sizes from 3’1” to 4’0”: 5” standard or heavy weight as specified.

3. Hinge Options: Comply with the following where indicated in the Hardware Sets or on Drawings:

   a. Non-removable Pins: Provide set screw in hinge barrel that, when tightened into a groove in hinge pin, prevents removal of pin while door is closed; for the following applications:

      1) Out-swinging exterior doors.
      2) Out-swinging access controlled doors.
      3) Out-swinging lockable doors.

4. Acceptable Manufacturers:

   a. Bommer Industries (BO).
   b. Hager Companies (HA).
   c. McKinney Products (MK).

2.3 DOOR OPERATING TRIM

A. Flush Bolts and Surface Bolts: ANSI/BHMA A156.3 and A156.16, Grade 1, certified automatic, self-latching, and manual flush bolts and surface bolts. Manual flush bolts to be furnished with top rod of sufficient length to allow bolt location approximately six feet from the floor. Furnish dust proof strikes for bottom bolts. Surface bolts to be minimum 8” in length and U.L. listed for labeled fire doors and U.L. listed for windstorm components where applicable. Provide related accessories (mounting brackets, strikes, coordinators, etc.) as required for appropriate installation and operation.

1. Acceptable Manufacturers:

   a. Burns Manufacturing (BU).
   b. Rockwood Manufacturing (RO).

c. Trimco (TC).

B. Door Push Plates and Pulls: ANS/BHMA A156.6 certified door pushes and pulls of type and design specified below or in the Hardware Sets. Coordinate and provide proper width and height as required where conflicting hardware dictates.

1. Push/Pull Plates: Minimum .050 inch thick, size as indicated in hardware sets, with beveled edges, secured with exposed screws unless otherwise indicated.
2. Door Pull and Push Bar Design: Size, shape, and material as indicated in the hardware sets. Minimum clearance of 2 1/2-inches from face of door unless otherwise indicated.
3. Offset Pull Design: Size, shape, and material as indicated in the hardware sets. Minimum clearance of 2 1/2-inches from face of door and offset of 90 degrees unless otherwise indicated.
4. Fasteners: Provide manufacturer's designated fastener type as indicated in Hardware Sets.

a. Acceptable Manufacturers:

1) Burns Manufacturing (BU).
2) Rockwood Manufacturing (RO).
3) Trimco (TC).

2.4 CYLINDERS AND KEYING

A. General: Cylinder manufacturer to have minimum (10) years experience designing secured master key systems and have on record a published security keying system policy.

B. Source Limitations: Obtain each type of keyed cylinder and keys from the same source manufacturer as locksets and exit devices, unless otherwise indicated.

C. Cylinders: Original manufacturer cylinders complying with the following:

1. Mortise Type: Threaded cylinders with rings and straight- or clover-type cam.
2. Rim Type: Cylinders with back plate, flat-type vertical or horizontal tailpiece, and raised trim ring.
3. Bored-Lock Type: Cylinders with tailpieces to suit locks.
4. Mortise and rim cylinder collars to be solid and recessed to allow the cylinder face to be flush and be free spinning with matching finishes.
5. Keyway: Match Facility Standard.

D. Permanent Cores: Manufacturer's standard; finish face to match lockset; complying with the following:

1. Removable Cores: Core insert, removable by use of a special key, and for use with only the core manufacturer's cylinder and door hardware. Provide removable core (small or large format) as specified in Hardware Sets.

E. High Security Cylinders: ANSI/BHMA A156.5, Grade 1, patented high security cylinders and keys able to be used together under the same facility master or grandmaster key system. Provide UL437 certified high security cylinders, employing a utility patented locking mechanism requiring the use of a patented key and pick resistance; cylinders are to be factory keyed.

1. Acceptable Manufacturers:

a. Sargent Manufacturing (SA) - KESO Series at exterior locations.
b. No Substitution – Facility Standard.

F. Security Cylinders: ANSI/BHMA A156.5, Grade 1, patented security cylinders and keys able to be used together under the same facility master or grandmaster key system. Cylinders are to be factory keyed.

1. Acceptable Manufacturers:

a. Corbin Russwin (RU) - Pyramid PS Series at interior locations.
b. No Substitution – Facility Standard.

G. Keying System: Each type of lock and cylinders to be factory keyed. Conduct specified "Keying Conference" to define and document keying system instructions and requirements. Furnish factory cut, nickel-silver large bow permanently inscribed with a visual key control number as directed by Owner. Incorporate decisions made in keying conference, and as follows:

1. Existing System: Master key or grand master key locks to Owner's existing system.

H. Key Quantity: Provide the following minimum number of keys:

1. Top Master Key: One (1)
2. Change Keys per Cylinder: Two (2)
3. Master Keys (per Master Key Group): Two (2)
4. Grand Master Keys (per Grand Master Key Group): Two (2)
5. Construction Keys (where required): Ten (10)
6. Construction Control Keys (where required): Two (2)
7. Permanent Control Keys (where required): Two (2)

I. Construction Keying: Provide construction master keyed cylinders or temporary keyed construction cores where specified. Provide construction master keys in quantity as required by project Contractor. Replace construction cores with permanent cores. Furnish permanent cores for installation as directed under specified "Keying Conference".

J. Key Registration List: Provide keying transcript list to Owner's representative in the proper format for importing into key control software.

2.5 MECHANICAL LOCKS AND LATCHING DEVICES

A. Mortise Locksets, Grade 1 (Heavy Duty): ANSI/BHMA A156.13, Series 1000, Operational Grade 1 certified mortise locksets furnished in the functions as specified in the Hardware Sets. Locksets to be manufactured with a corrosion resistant, stamped 12 gauge minimum formed steel case and be field-reversible for handing without disassembly of the lock body. Lockset trim (including knobs, levers, escutcheons, roses) to be the product of a single manufacturer. Furnish with standard 2 3/4" backset, 3/4" throw anti-friction stainless steel latchbolt, and a full 1" throw stainless steel bolt for deadbolt functions.

1. Acceptable Manufacturers:

a. Corbin Russwin Hardware (RU) – ML2000 Series.
b. No Substitution – Facility Standard.

B. Cylindrical Locksets, Grade 1 (Heavy Duty): ANSI/BHMA A156.2, Series 4000, Grade 1 certified cylindrical (bored) locksets furnished in the functions as specified in the Hardware Sets. Lock chassis fabricated of heavy gauge steel, zinc dichromate plated, with through-bolted application. Furnish with solid cast levers, standard 2 3/4” backset, and 1/2" (3/4" at rated paired openings) throw brass or stainless steel latchbolt. Locks are to be non-handed and fully field reversible.

1. Acceptable Manufacturers:

   a. Corbin Russwin Hardware (RU) – CL3300 Series.
   b. No Substitution – Facility Standard.

C. Lock Trim Design: As specified in Hardware Sets.

2.6 LOCK AND LATCH STRIKES

A. Strikes: Provide manufacturer's standard strike with strike box for each latch or lock bolt, with curved lip extended to protect frame, finished to match door hardware set, unless otherwise indicated, and as follows:

1. Flat-Lip Strikes: For locks with three-piece antifriction latchbolts, as recommended by manufacturer.
2. Extra-Long-Lip Strikes: For locks used on frames with applied wood casing trim.
3. Aluminum-Frame Strike Box: Provide manufacturer's special strike box fabricated for aluminum framing.

B. Standards: Comply with the following:

1. Strikes for Mortise Locks and Latches: BHMA A156.13.
2. Strikes for Bored Locks and Latches: BHMA A156.2.
3. Strikes for Auxiliary Deadlocks: BHMA A156.5.
4. Dustproof Strikes: BHMA A156.16.

2.7 CONVENTIONAL EXIT DEVICES

A. General Requirements: All exit devices specified herein shall meet or exceed the following criteria:

1. At doors not requiring a fire rating, provide devices complying with NFPA 101 and listed and labeled for "Panic Hardware" according to UL305. Provide proper fasteners as required by manufacturer including sex nuts and bolts at openings specified in the Hardware Sets.

2. Where exit devices are required on fire rated doors, provide devices complying with NFPA 80 and with UL labeling indicating "Fire Exit Hardware". Provide devices with the proper fasteners for installation as tested and listed by UL. Consult manufacturer’s catalog and template book for specific requirements.

   a. Fire Exit Removable Mullions: Provide keyed removable mullions for use with fire exit devices complying with NFPA 80 that are listed and labeled by a testing and inspecting agency acceptable to authorities having jurisdiction, for fire and panic protection, based on testing according to UL 305 and NFPA 252. Mullions to be used only with exit devices for which they have been tested.

3. Except on fire rated doors, provide exit devices with hex key dogging device to hold the pushbar and latch in a retracted position. Provide optional keyed cylinder dogging on devices where specified in Hardware Sets.

4. Devices must fit flat against the door face with no gap that permits unauthorized dogging of the push bar. The addition of filler strips is not acceptable except in any case where the door light extends behind the device as in a full glass configuration.

5. Flush End Caps: Provide heavy weight impact resistant flush end caps made of architectural metal in the same finish as the devices as in the Hardware Sets. Plastic end caps will not be acceptable.

6. Lever Operating Trim: Where exit devices require lever trim, furnish manufacturer's heavy duty trim with cold forged escutcheons, beveled edges, and four threaded studs for thru-bolts.

   a. Lock Trim Design: As indicated in Hardware Sets, provide finishes and designs to match that of the specified locksets. Provided free-wheeling type trim where indicated.
   b. Where function of exit device requires a cylinder, provide an interchangeable core type keyed cylinder (Rim or Mortise) as specified in Hardware Sets.

7. Vertical Rod Exit Devices: Provide and install interior surface and concealed vertical rod exit devices as Less Bottom Rod (LBR) unless otherwise indicated.

8. Narrow Stile Applications: At doors constructed with narrow stiles, or as specified in Hardware Sets, provide devices designed for maximum 2” wide stiles.

9. Rail Sizing: Provide exit device rails factory sized for proper door width application.

10. Through Bolt Installation: For exit devices and trim as indicated in Door Hardware Sets.

B. Conventional Push Rail Exit Devices (Heavy Duty): ANSI/BHMA A156.3, Grade 1 certified panic and fire exit hardware devices furnished in the functions specified in the Hardware Sets. Mounting rails to be formed from smooth stainless steel, brass or bronze architectural materials no less than 0.072" thick, with push rails a minimum of 0.062" thickness. Painted or aluminum metal rails are not acceptable. Exit device latch to be investment cast stainless steel, pullman type, with deadlock feature.

   1. Acceptable Manufacturers:

      a. Corbin Russwin Hardware (RU) - ED4000 / ED5000 Series.
      b. Von Duprin (VD) - 35A/98 XP Series.
      c. Yale Locks and Hardware (YA) - 7000 Series.

C. Tube Steel Removable Mullions: ANSI/BHMA A156.3 removable steel mullions with malleable-iron top and bottom retainers and a primed paint finish. Provide keyed removable feature, stabilizers, and mounting brackets as specified in the Hardware Sets. At openings designed for severe wind load conditions due to hurricanes or tornadoes, provide manufacturers approved mullion and accessories to meet applicable state and local windstorm codes.

   1. Acceptable Manufacturers:

      a. Corbin Russwin Hardware (RU) - 700/900 Series.
      b. Von Duprin (VD) - 9954 Series.
      c. Yale Locks and Hardware (YA) - M200 Series.

2.8 DOOR CLOSERS

A. All door closers specified herein shall meet or exceed the following criteria:

   1. General: Door closers to be from one manufacturer, matching in design and style, with the same type door preparations and templates regardless of application or spring size. Closers to be non-handed with full sized covers including installation and adjusting information on inside of cover.

2. Standards: Closers to comply with UL-10C and UBC 7-2 for Positive Pressure Fire Test and be U.L. listed for use of fire rated doors.

3. Size of Units: Comply with manufacturer's written recommendations for sizing of door closers depending on size of door, exposure to weather, and anticipated frequency of use. Where closers are indicated for doors required to be accessible to the physically handicapped, provide units complying with ANSI ICC/A117.1.

4. Closer Arms: Provide heavy duty, forged steel closer arms unless otherwise indicated in Hardware Sets.

   a. Where closers are indicated to have mechanical dead-stop, provide heavy duty arms and brackets with an integral positive stop.
   b. Where closers are indicated to have mechanical hold open, provide heavy duty units with an additional built-in mechanical holder assembly designed to hold open against normal wind and traffic conditions. Holder to be manually selectable to on-off position.
   c. Where closers are indicated to have a cushion-type stop, provide heavy duty arms and brackets with spring stop mechanism to cushion door when opened to maximum degree.
   d. Closers shall not be installed on exterior or corridor side of doors; where possible install closers on door for optimum aesthetics. Provide drop plates or other accessories as required for proper mounting.

5. Closer Accessories: Provide door closer accessories including custom templates, special mounting brackets, spacers and drop plates, and through-bolt or security type fasteners as specified in the door Hardware Sets.

B. Door Closers, Surface Mounted (Heavy Duty): ANSI/BHMA A156.4, Grade 1 surface mounted, heavy duty door closers with complete spring power adjustment, sizes 1 thru 6; and fully operational adjustable according to door size, frequency of use, and opening force. Closers to be rack and pinion type, one piece cast iron or aluminum alloy body construction, with adjustable backcheck and separate non-critical valves for closing sweep and latch speed control. Provide non-handed units standard.

   1. Acceptable Manufacturers:

      a. Corbin Russwin Hardware (RU) - DC8000 Series.
      b. LCN Closers (LC) - 4040XP Series.
      c. Norton Door Controls (NO) - 7500 Series.

2.9 SURFACE MOUNTED CLOSER HOLDERS

A. Electromagnetic Door Holders: Certified ANSI A156.15 electromagnetic door holder/releases with a minimum 20 to 40 pounds holding power and single coil construction able to accommodate.12VDC, 24VAC, 24VDC and 120VAC. Coils to be independently wound, employing an integral fuse and armatures to include a positive release button.

   1. Acceptable Manufacturers:

      a. LCN Door Closers (LC) - SEM7800 Series.
      b. Rixson (RF) - 980/990 Series.
      c. Sargent Manufacturing (SA) - 1560 Series.

2.10 ARCHITECTURAL TRIM

A. Door Protective Trim

1. General: Door protective trim units to be of type and design as specified below or in the Hardware Sets.

2. Size: Fabricate protection plates (kick, armor, or mop) not more than 2" less than door width (LDW) on stop side of single doors and 1” LDW on stop side of pairs of doors, and not more than 1" less than door width on pull side. Coordinate and provide proper width and height as required where conflicting hardware dictates. Height to be as specified in the Hardware Sets.

3. Metal Protection Plates: ANSI/BHMA A156.6 certified metal protection plates (kick, armor, or mop), beveled on four edges (B4E), fabricated from the following:

   a. Stainless Steel: 300 series, 050-inch thick, with countersunk screw holes (CSK).

4. Fasteners: Provide manufacturer's designated fastener type as specified in the Hardware Sets.

5. Metal Door Edging: Door protection edging fabricated from a minimum .050-inch thick metal sheet, formed into an angle or "U" cap shapes, surface or mortised mounted onto edge of door. Provide appropriate leg overlap to account for protection plates as required. Height to be as specified in the Hardware Sets.

6. Acceptable Manufacturers:

   a. Rockwood Manufacturing (RO).

2.11 DOOR STOPS AND HOLDERS

A. General: Door stops and holders to be of type and design as specified below or in the Hardware Sets.

B. Door Stops and Bumpers: ANSI/BHMA A156.16, Grade 1 certified door stops and wall bumpers. Provide wall bumpers, either convex or concave types with anchorage as indicated, unless floor or other types of door stops are specified in Hardware Sets. Do not mount floor stops where they will impede traffic. Where floor or wall bumpers are not appropriate, provide overhead type stops and holders.

1. Acceptable Manufacturers:

   a. Burns Manufacturing (BU).
   b. Rockwood Manufacturing (RO).
   c. Trimco (TC).

C. Overhead Door Stops and Holders: ANSI/BHMA A156.6, Grade 1 certified overhead stops and holders to be surface or concealed types as indicated in Hardware Sets. Track, slide, arm and jamb bracket to be constructed of extruded bronze and shock absorber spring of heavy tempered steel. Provide non-handed design with mounting brackets as required for proper operation and function.

1. Acceptable Manufacturers:

   a. Rixson Door Controls (RF).
   b. Rockwood Manufacturing (RO).
   c. Sargent Manufacturing (SA).

2.12 ARCHITECTURAL SEALS

A. General: Thresholds, weatherstripping, and gasket seals to be of type and design as specified below or in the Hardware Sets. Provide continuous weatherstrip gasketing on exterior doors and provide smoke, light, or sound gasketing on interior doors where indicated. At exterior applications provide non-corrosive fasteners and elsewhere where indicated.

B. Smoke Labeled Gasketing: Assemblies complying with NFPA 105 that are listed and labeled by a testing and inspecting agency acceptable to authorities having jurisdiction, for smoke control ratings indicated, based on testing according to UL 1784.

1. Provide smoke labeled perimeter gasketing at all smoke labeled openings.

C. Fire Labeled Gasketing: Assemblies complying with NFPA 80 that are listed and labeled by a testing and inspecting agency acceptable to authorities having jurisdiction, for fire ratings indicated, based on testing according to UL-10C.

1. Provide intumescent seals as indicated to meet UL10C Standard for Positive Pressure Fire Tests of Door Assemblies, and UBC 7-2, Fire Tests of Door Assemblies.

D. Replaceable Seal Strips: Provide only those units where resilient or flexible seal strips are easily replaceable and readily available from stocks maintained by manufacturer.

E. Acceptable Manufacturers:

1. National Guard Products (NG).
2. Pemko Manufacturing (PE).
3. Reese Enterprises, Inc. (RS).

2.13 FABRICATION

A. Fasteners: Provide door hardware manufactured to comply with published templates generally prepared for machine, wood, and sheet metal screws. Provide screws according to manufacturers recognized installation standards for application intended.

2.14 FINISHES

A. Standard: Designations used in the Hardware Sets and elsewhere indicate hardware finishes complying with ANSI/BHMA A156.18, including coordination with traditional U.S. finishes indicated by certain manufacturers for their products.

B. Provide quality of finish, including thickness of plating or coating (if any), composition, hardness, and other qualities complying with manufacturer's standards, but in no case less than specified by referenced standards for the applicable units of hardware.

C. Protect mechanical finishes on exposed surfaces from damage by applying a strippable, temporary protective covering before shipping.

PART 3 - EXECUTION

3.1 EXAMINATION

A. Examine scheduled openings, with Installer present, for compliance with requirements for installation tolerances, labeled fire door assembly construction, wall and floor construction, and other conditions affecting performance.

B. Notify architect of any discrepancies or conflicts between the door schedule, door types, drawings and scheduled hardware. Proceed only after such discrepancies or conflicts have been resolved in writing.

3.2 PREPARATION

A. Hollow Metal Doors and Frames: Comply with ANSI/DHI A115 series.

B. Wood Doors: Comply with ANSI/DHI A115-W series.

3.3 INSTALLATION

A. Install each item of mechanical and electromechanical hardware and access control equipment to comply with manufacturer's written instructions and according to specifications.

1. Installers are to be trained and certified by the manufacturer on the proper installation and adjustment of fire, life safety, and security products including: hanging devices; locking devices; closing devices; and seals.

B. Mounting Heights: Mount door hardware units at heights indicated in following applicable publications, unless specifically indicated or required to comply with governing regulations:

1. Standard Steel Doors and Frames: DHI's "Recommended Locations for Architectural Hardware for Standard Steel Doors and Frames."
2. Wood Doors: DHI WDHS.3, "Recommended Locations for Architectural Hardware for Wood Flush Doors."
3. Where indicated to comply with accessibility requirements, comply with ANSI A117.1 "Accessibility Guidelines for Buildings and Facilities."
4. Provide blocking in drywall partitions where wall stops or other wall mounted hardware is located.

C. Retrofitting: Install door hardware to comply with manufacturer's published templates and written instructions. Where cutting and fitting are required to install door hardware onto or into surfaces that are later to be painted or finished in another way, coordinate removal, storage, and reinstallation of surface protective trim units with finishing work specified in Division 9 Sections. Do not install surface-mounted items until finishes have been completed on substrates involved.

D. Thresholds: Set thresholds for exterior and acoustical doors in full bed of sealant complying with requirements specified in Division 7 Section "Joint Sealants."

E. Storage: Provide a secure lock up for hardware delivered to the project but not yet installed. Control the handling and installation of hardware items so that the completion of the work will not be delayed by hardware losses before and after installation.

3.4 FIELD QUALITY CONTROL

A. Field Inspection: Supplier will perform a final inspection of installed door hardware and state in report whether work complies with or deviates from requirements, including whether door hardware is properly installed, operating and adjusted.

3.5 ADJUSTING

A. Initial Adjustment: Adjust and check each operating item of door hardware and each door to ensure proper operation or function of every unit. Replace units that cannot be adjusted to operate as intended. Adjust door control devices to compensate for final operation of heating and ventilating equipment and to comply with referenced accessibility requirements.

3.6 CLEANING AND PROTECTION

A. Protect all hardware stored on construction site in a covered and dry place. Protect exposed hardware installed on doors during the construction phase. Install any and all hardware at the latest possible time frame.

B. Clean adjacent surfaces soiled by door hardware installation.

C. Clean operating items as necessary to restore proper finish. Provide final protection and maintain conditions that ensure door hardware is without damage or deterioration at time of owner occupancy.

3.7 DEMONSTRATION

A. Instruct Owner's maintenance personnel to adjust, operate, and maintain mechanical and electromechanical door hardware.

3.8 DOOR HARDWARE SCHEDULE

A. The hardware sets represent the design intent and direction of the owner and architect. They are a guideline only and should not be considered a detailed hardware schedule. Discrepancies, conflicting hardware and missing items should be brought to the attention of the architect with corrections made prior to the bidding process. Omitted items not included in a hardware set should be scheduled with the appropriate additional hardware required for proper application and functionality.

B. Manufacturer’s Abbreviations:

1. MK - McKinney
2. MR - Markar
3. RO - Rockwood
4. RU - Corbin Russwin
5. SA - Sargent
6. RF - Rixson
7. NO - Norton
8. PE - Pemko
9. 00 - Other

Hardware Schedule

Set: 1.0

Doors: 132/1, 132/2, 132/3, 157/1

1	All Hardware	BY DOOR SUPPLIER		00

Set: 2.0

Doors: 159/1, 163/1

6	Hinge (heavy weight)	T4A3386	US32D	MK
1	Dust Proof Strike	570	US26D	RO
2	Flush Bolt (manual)	555 (or) 557	US26D	RO
1	Mortise Lock (storeroom)	ML2057 PSA SS078 LC	626	RU
1	Cylinder (KESO, mortise)	82-72 CMK	US26D	SA
2	Door Closer	CPS7500	689	NO
1	Threshold	279x224AFGT MSES25SS		PE
1	Rain Guard	346C		PE
1	Gasketing (head/jamb)	S773BL		PE
2	Sweep	3452CNB		PE
1	Astragal	S771C		PE
1	Astragal	357SP		PE

Set: 3.0

Doors: 261/1

3	Hinge	TA2714	US26D	MK
1	Cylindrical Lock (storeroom)	CL3357 PZD CTP	626	RU
1	Cylinder Core (Pyramid)	8027		RU
1	Door Closer	PR7500	689	NO
1	Kick Plate	K1050 8" 4BE	US32D	RO
1	Door Stop	403 (or) 441CU	US26D	RO
3	Silencer	608 (or) 609	GRY	RO

Set: 4.0

Doors: 160/1, 161/1

3	Hinge	TA2714	US26D	MK
1	Cylindrical Lock (storeroom)	CL3357 PZD CTP	626	RU
1	Cylinder Core (Pyramid)	8027		RU
1	Door Closer	R7500	689	NO
1	Kick Plate	K1050 8" 4BE	US32D	RO
1	Door Stop	403 (or) 441CU	US26D	RO
1	Gasketing (head/jamb)	S88BL		PE

Set: 5.0

Doors: 262/1

3 Hinge	TA2714	US26D	MK
1 Cylindrical Lock (storeroom)	CL3357 PZD CTP	626	RU
1 Cylinder Core (Pyramid)	8027		RU
1 Door Closer	PR7500	689	NO
1 Kick Plate	K1050 8" 4BE	US32D	RO
1 Door Stop	403 (or) 441CU	US26D	RO
1 Gasketing (head/jamb)	S88BL		PE

Set: 6.0

Doors: 150/1

3 Hinge	TA2714	US26D	MK
1 Cylindrical Lock (classroom)	CL3355 PZD CTPD	626	RU
1 Cylinder Core (Pyramid)	8027		RU
1 Door Stop	403 (or) 441CU	US26D	RO
3 Silencer	608 (or) 609	GRY	RO

Set: 7.0

Doors: 102/2, 103/2, 104/2, 105/2, 205/2, 206/2, 207/2, 208/2

3 Hinge	TA2714	US26D	MK
1 Cylindrical Lock (classroom)	CL3355 PZD CTPD	626	RU
1 Cylinder Core (Pyramid)	8027		RU
1 Surface Overhead Stop	10-X36	652	RF
3 Silencer	608 (or) 609	GRY	RO

Set: 8.0

Doors: 153/1

3 Hinge	TA2714	US26D	MK
1 Cylindrical Lock (classroom)	CL3355 PZD CTPD	626	RU
1 Cylinder Core (Pyramid)	8027		RU
1 Door Closer	R7500	689	NO
2 Kick Plate	K1050 8" 4BE	US32D	RO
1 Door Stop	403 (or) 441CU	US26D	RO
1 Gasketing (head/jamb)	S88BL		PE

Set: 9.0

Doors: 152/1

3 Hinge	TA2714	US26D	MK
1 Cylindrical Lock (privacy)	CL3320 PZD	626	RU
2 Kick Plate	K1050 8" 4BE	US32D	RO
1 Door Stop	403 (or) 441CU	US26D	RO
3 Silencer	608 (or) 609	GRY	RO

Set: 10.0

Doors: 102/1, 103/1, 104/1, 105/1, 205/1, 206/1, 207/1, 208/1

3 Hinge (heavy weight)	T4A3786	US26D	MK
1 Cylindrical Lock (classroom intruder)	CL3352 PZD CTPD	626	RU
2 Cylinder Core (Pyramid)	8027		RU
1 Door Closer	PR7500	689	NO
1 Kick Plate	K1050 8" 4BE	US32D	RO
1 Door Stop	403 (or) 441CU	US26D	RO
1 Gasketing (head/jamb)	S773BL		PE

Set: 11.0

Doors: 108/2

6 Hinge (heavy weight)	T4A3786	US26D	MK
2 Door Pull	BF Y110 Mtg-Type 1	US32D	RO
2 Push Plate	70G (4 X 20)	US32D	RO
2 Door Closer	R7500	689	NO
2 Kick Plate	K1050 8" 4BE	US32D	RO
2 Door Stop	403 (or) 441CU	US26D	RO
1 Gasketing (head/jamb)	S773BL		PE
2 Astragal	297AS		PE

Set: 12.0

Doors: 148/1

1 Continuous Hinge	HG-315 - DOOR HEIGHT	630	MR
1 Cylindrical Lock (classroom)	CL3355 PZD CTPD	626	RU
1 Cylinder Core (Pyramid)	8027		RU
1 Door Closer	PR7500	689	NO
2 Kick Plate	K1050 8" 4BE	US32D	RO
1 Door Stop	403 (or) 441CU	US26D	RO
1 Gasketing (head/jamb)	S88BL		PE

Set: 13.0

Doors: 108/1

6 Hinge (heavy weight)	T4A3386	US32D	MK
1 Removable Mullion	900BKM - DOOR HEIGHT		RU
1 Exit Device (rim, exit only)	ED5200 M52	630	RU
1 Exit Device (rim, nightlatch)	ED5200 K157 M52	630	RU
3 Cylinder (KESO, mortise)	82-72 CMK	US26D	SA
1 Cylinder (KESO, rim)	82-64 CMK	US26D	SA
2 Door Pull	BF158 Mtg-Type 1	US32D	RO
2 Door Closer	PR7500	689	NO
2 Door Stop - HD Floor	471	US26D	RO
1 Threshold	272A MSES25SS		PE
1 Rain Guard	346C		PE
1 Gasketing (head/jamb)	S773BL		PE
1 Gasketing (mullion)	5110BL		PE
2 Sweep	3452CNB		PE
2 Astragal	297AS		PE

Set: 14.0

Doors: 101/2, 127/1

6 Hinge (heavy weight)	T4A3386	US32D	MK
1 Removable Mullion	900BKM - DOOR HEIGHT		RU
2 Exit Device (rim, exit only)	ED5200 M51	630	RU
2 Door Closer	CPS7500	689	NO
1 Threshold	272A MSES25SS		PE
1 Rain Guard	346C		PE
1 Gasketing (head/jamb)	S773BL		PE
1 Gasketing (mullion)	5110BL		PE
2 Sweep	3452CNB		PE
2 Astragal	297AS		PE

Set: 15.0

Doors: 107/1

1 Continuous Hinge	HG-315 - DOOR HEIGHT	630	MR
1 Mortise Lock (storeroom)	ML2057 PSA LC	626	RU
1 Cylinder (KESO, mortise)	82-72 CMK	US26D	SA
1 Door Closer	CPS7500T	689	NO
1 Armor Plate	K1050 34" 4BE	US32D	RO
1 Threshold	272A MSES25SS		PE
1 Rain Guard	346C		PE
1 Gasketing (head/jamb)	S773BL		PE

1 Sweep	3452CNB		PE
1 Edge Guard	306B 34"	US32D	RO
1 Viewer	622	US26D	RO

Set: 16.0

Doors: 101/1, 209/1

6 Hinge (heavy weight)	T4A3786	US26D	MK
2 Exit Device (CVR, passage)	ED5860B PR910 M55	630	RU
2 Door Closer	R7500	689	NO
2 Kick Plate	K1050 8" 4BE	US32D	RO
2 Door Stop	403 (or) 441CU	US26D	RO
1 Gasketing (head/jamb)	S88BL		PE
2 Astragal	297AS		PE

Set: 17.0

Doors: 100/1, 210/1

6 Hinge (heavy weight)	T4A3786	US26D	MK
2 Exit Device (CVR, passage)	ED5860B PR910 M55	630	RU
2 Door Closer	R7500	689	NO
2 Kick Plate	K1050 8" 4BE	US32D	RO
2 Electromagnetic Holder	998 VOLTAGE/CURRENT TO SUIT	689	RF
1 Gasketing (head/jamb)	S88BL		PE
2 Astragal	297AS		PE

Notes: Connect holder to fire alarm system to release upon fire alarm.

Set: 18.0

Doors: 120/1, 122/1, 212/1, 214/1, 231/1, 322C/1

3 Hinge (heavy weight)	T4A3786	US26D	MK
1 Door Pull	BF Y110 Mtg-Type 1	US32D	RO
1 Push Plate	70G (4 X 20)	US32D	RO
1 Door Closer	PR7500	689	NO
1 Kick Plate	K1050 8" 4BE	US32D	RO
1 Door Stop	403 (or) 441CU	US26D	RO
3 Silencer	608 (or) 609	GRY	RO

END OF SECTION 087100

SECTION 088000 - GLAZING

PART 1 - GENERAL

1.1 RELATED DOCUMENTS

A. Drawings and general provisions of the Contract, including General and Supplementary Conditions and Division 01 Specification Sections, apply to this Section.

1.2 SUMMARY

A. Section includes glazing for the following products and applications, including those specified in other Sections where glazing requirements are specified by reference to this Section:

1. Hollow metal and wood doors.
2. Storefront framing

1.3 DEFINITIONS

A. Glass Manufacturers: Firms that produce primary glass, fabricated glass, or both, as defined in referenced glazing publications.

B. Glass Thicknesses: Indicated by thickness designations in millimeters according to ASTM C 1036.

C. Interspace: Space between lites of an insulating-glass unit.

1.4 PERFORMANCE REQUIREMENTS

A. General: Installed glazing systems shall withstand normal thermal movement and wind and impact loads (where applicable) without failure, including loss or glass breakage attributable to the following: defective manufacture, fabrication, or installation; failure of sealants or gaskets to remain watertight and airtight; deterioration of glazing materials; or other defects in construction.

B. Delegated Design: Design glass, including comprehensive engineering analysis according to ASTM E 1300 and ICC's 2003 International Building Code by a qualified professional engineer, using the following design criteria:

1. Design Wind Pressures: Determine design wind pressures applicable to Project according to ASCE/SEI 7, based on heights above grade indicated on Drawings.

   a. Basic Wind Speed: 110 mph (49 m/s).
   b. Importance Factor: III.
   c. Exposure Category: B.

2. Vertical Glazing: For glass surfaces sloped 15 degrees or less from vertical, design glass to resist design wind pressure based on glass type factors for short-duration load.
3. Maximum Lateral Deflection: For glass supported on all four edges, limit center-of-glass deflection at design wind pressure to not more than 1/50 times the short-side length or 1 inch (25 mm), whichever is less.

4. Differential Shading: Design glass to resist thermal stresses induced by differential shading within individual glass lites.

C. Thermal Movements: Allow for thermal movements from ambient and surface temperature changes acting on glass framing members and glazing components.

1. Temperature Change: 120 deg F (67 deg C), ambient; 180 deg F (100 deg C), material surfaces.

1.5 ACTION SUBMITTALS

A. Product Data: For each glass product and glazing material indicated.

B. Glass Samples: For each type of glass product other than clear monolithic vision glass; 12 inches (300 mm) square.

1. Tinted glass.
2. Coated glass.
3. Insulating glass.
4. Fire rated glass.

C. Glazing Schedule: List glass types and thicknesses for each size opening and location. Use same designations indicated on Drawings.

1.6 INFORMATIONAL SUBMITTALS

A. Qualification Data: For installers.

B. Product Certificates: For glass and glazing products, from manufacturer.

C. Warranties: Sample of special warranties.

1.7 QUALITY ASSURANCE

A. Manufacturer Qualifications for Insulating-Glass Units with Sputter-Coated, Low-E Coatings: A qualified insulating-glass manufacturer who is approved and certified by coated-glass manufacturer.

B. Installer Qualifications: A qualified installer who employs glass installers for this Project who are certified under the National Glass Association's Certified Glass Installer Program.

C. Source Limitations for Glass: Obtain insulating glass from single source from single manufacturer for each glass type.

D. Source Limitations for Glazing Accessories: Obtain from single source from single manufacturer for each product and installation method.

E. Glazing Publications: Comply with published recommendations of glass product manufacturers and organizations below, unless more stringent requirements are indicated. Refer to these publications for glazing terms not otherwise defined in this Section or in referenced standards.

1. IGMA Publication for Insulating Glass: SIGMA TM-3000, "North American Glazing Guidelines for Sealed Insulating Glass Units for Commercial and Residential Use."

F. Safety Glazing Labeling: Where safety glazing labeling is indicated, permanently mark glazing with certification label of the SGCC or another certification agency acceptable to authorities having jurisdiction. Label shall indicate manufacturer's name, type of glass, thickness, and safety glazing standard with which glass complies.

G. Fire-Protection-Rated Glazing Labeling: Permanently mark fire-protection-rated glazing with certification label of a testing agency acceptable to authorities having jurisdiction. Label shall indicate manufacturer's name, test standard, whether glazing is for use in fire doors or other openings, whether or not glazing passes hose-stream test, whether or not glazing has a temperature rise rating of 450 deg F (250 deg C), and the fire-resistance rating in minutes.

H. Insulating-Glass Certification Program: Permanently marked either on spacers or on at least one component lite of units with appropriate certification label of IGCC.

1.8 DELIVERY, STORAGE, AND HANDLING

A. Protect glazing materials according to manufacturer's written instructions. Prevent damage to glass and glazing materials from condensation, temperature changes, direct exposure to sun, or other causes.

1.9 PROJECT CONDITIONS

A. Environmental Limitations: Do not proceed with glazing when ambient and substrate temperature conditions are outside limits permitted by glazing material manufacturers and when glazing channel substrates are wet from rain, frost, condensation, or other causes.

1. Do not install glazing sealants when ambient and substrate temperature conditions are outside limits permitted by sealant manufacturer or below 40 deg F (4.4 deg C).

1.10 WARRANTY

A. Manufacturer's Special Warranty for Coated-Glass Products: Manufacturer's standard form in which coated-glass manufacturer agrees to replace coated-glass units that deteriorate within specified warranty period. Deterioration of coated glass is defined as defects developed from normal use that are not attributed to glass breakage or to maintaining and cleaning coated glass contrary to manufacturer's written instructions. Defects include peeling, cracking, and other indications of deterioration in coating.

1. Warranty Period: 10 years from date of Substantial Completion.

B. Manufacturer's Special Warranty on Insulating Glass: Manufacturer's standard form in which insulating-glass manufacturer agrees to replace insulating-glass units that deteriorate within specified warranty period. Deterioration of insulating glass is defined as failure of hermetic seal under normal use that is not attributed to glass breakage or to maintaining and cleaning insulating glass contrary to manufacturer's written instructions. Evidence of failure is the obstruction of vision by dust, moisture, or film on interior surfaces of glass.

1. Warranty Period: 10 years from date of Substantial Completion.

PART 2 - PRODUCTS

2.1 GLASS PRODUCTS, GENERAL

A. Thickness: Where glass thickness is indicated, it is a minimum. Provide glass lites in thicknesses as needed to comply with requirements indicated.

1. Minimum Glass Thickness for Exterior Lites: Not less than 6.0 mm.
2. Thickness of Tinted Glass: Provide same thickness for each tint color indicated throughout Project.

B. Strength: Where float glass is indicated, provide annealed float glass, Kind HS heat-treated float glass, or Kind FT heat-treated float glass as needed to comply with "Performance Requirements" Article. Where heat-strengthened glass is indicated, provide Kind HS heat-treated float glass or Kind FT heat-treated float glass as needed to comply with "Performance Requirements" Article. Where fully tempered glass is indicated, provide Kind FT heat-treated float glass.

C. Thermal and Optical Performance Properties: Provide glass with performance properties specified, as indicated in manufacturer's published test data, based on procedures indicated below:

1. For insulating-glass units, properties are based on units of thickness indicated for overall unit and for each lite.
2. U-Factors: Center-of-glazing values, according to NFRC 100 and based on LBL's WINDOW 5.2 computer program, expressed as Btu/sq. ft. x h x deg F (W/sq. m x K).
3. Solar Heat-Gain Coefficient and Visible Transmittance: Center-of-glazing values, according to NFRC 200 and based on LBL's WINDOW 5.2 computer program.
4. Visible Reflectance: Center-of-glazing values, according to NFRC 300.

2.2 GLASS PRODUCTS

A. Float Glass: ASTM C 1036, Type I, Quality-Q3, Class I (clear) unless otherwise indicated.

B. Heat-Treated Float Glass: ASTM C 1048; Type I; Quality-Q3; Class I (clear) unless otherwise indicated; of kind and condition indicated.

1. Fabrication Process: By horizontal (roller-hearth) process with roll-wave distortion parallel to bottom edge of glass as installed unless otherwise indicated.
2. For uncoated glass, comply with requirements for Condition A.
3. For coated vision glass, comply with requirements for Condition C (other coated glass).

2.3 INSULATING GLASS

A. Manufacturers: Subject to compliance with requirements, available manufacturers offering products that may be incorporated into the Work include, but are not limited to, the following:

1. PPG Industries, Inc.; Solarban 70XL (2) w/ Optigray tint.

B. Insulating-Glass Units: Factory-assembled units consisting of sealed lites of glass separated by a dehydrated interspace, qualified according to ASTM E 2190, and complying with other requirements specified.

1. Sealing System: Dual seal, with manufacturer's standard primary and secondary.

2. Spacer: Manufacturer's standard spacer material and construction.
3. Desiccant: Molecular sieve or silica gel, or blend of both.

C. Glass: Comply with applicable requirements in "Glass Products" Article as indicated by designations in "Insulating-Glass Types" Article.

2.4 FIRE-RATED GLAZING (**FG**)

A. Fire-Protection- and Fire-Resistance-Rated Glazing, General: Listed and labeled by a testing agency acceptable to authorities having jurisdiction, for fire-protection ratings indicated, based on testing according to NFPA 252 for door assemblies.

B. Laminated Ceramic Glazing: Laminated glass made from 2 or more plies of clear, ceramic flat glass; complying with testing requirements in 16 CFR 1201 for Category II materials.

1. Products: Subject to compliance with requirements, provide one of the following:

a. Nippon Electric Glass Co., Ltd. (distributed by Technical Glass Products).
b. Schott North America, Inc.
c. Vetrotech Saint-Gobain.

2.5 GLAZING GASKETS

A. Dense Compression Gaskets: Molded or extruded gaskets of profile and hardness required to maintain watertight seal, made from one of the following:

1. Neoprene complying with ASTM C 864.
2. EPDM complying with ASTM C 864.
3. Silicone complying with ASTM C 1115.
4. Thermoplastic polyolefin rubber complying with ASTM C 1115.

B. Soft Compression Gaskets: Extruded or molded, closed-cell, integral-skinned neoprene, EPDM, silicone, or thermoplastic polyolefin rubber gaskets complying with ASTM C 509, Type II, black; of profile and hardness required to maintain watertight seal.

1. Application: Use where soft compression gaskets will be compressed by inserting dense compression gaskets on opposite side of glazing or pressure applied by means of pressure-glazing stops on opposite side of glazing.

C. Lock-Strip Gaskets: Neoprene extrusions in size and shape indicated, fabricated into frames with molded corner units and zipper lock-strips, complying with ASTM C 542, black.

2.6 GLAZING SEALANTS

A. General:

1. Compatibility: Provide glazing sealants that are compatible with one another and with other materials they will contact, including glass products, seals of insulating-glass units, and glazing channel substrates, under conditions of service and application, as demonstrated by sealant manufacturer based on testing and field experience.

2. Suitability: Comply with sealant and glass manufacturers' written instructions for selecting glazing sealants suitable for applications indicated and for conditions existing at time of installation.
3. Sealants used inside the weatherproofing system, shall have a VOC content of not more than 250 g/L when calculated according to 40 CFR 59, Subpart D (EPA Method 24).
4. Colors of Exposed Glazing Sealants: As selected by Architect from manufacturer's full range.

B. Glazing Sealant: Neutral-curing silicone glazing sealant complying with ASTM C 920, Type S, Grade NS, Class 50, Use NT.

1. Products: Subject to compliance with requirements, provide one of the following:

a. BASF Building Systems; Omniseal 50.
b. Dow Corning Corporation; 795.
c. Pecora Corporation; 898.
d. Polymeric Systems, Inc.; PSI-641.
e. Sika Corporation, Construction Products Division; SikaSil-C995.

2.7 MISCELLANEOUS GLAZING MATERIALS

A. General: Provide products of material, size, and shape complying with referenced glazing standard, requirements of manufacturers of glass and other glazing materials for application indicated, and with a proven record of compatibility with surfaces contacted in installation.

B. Cleaners, Primers, and Sealers: Types recommended by sealant or gasket manufacturer.

C. Setting Blocks: Elastomeric material with a Shore, Type A durometer hardness of 85, plus or minus 5.

D. Spacers: Elastomeric blocks or continuous extrusions of hardness required by glass manufacturer to maintain glass lites in place for installation indicated.

E. Edge Blocks: Elastomeric material of hardness needed to limit glass lateral movement (side walking).

2.8 FABRICATION OF GLAZING UNITS

A. Fabricate glazing units in sizes required to fit openings indicated for Project, with edge and face clearances, edge and surface conditions, and bite complying with written instructions of product manufacturer and referenced glazing publications, to comply with system performance requirements.

2.9 MONOLITHIC-GLASS TYPES

A. Glass Type TEMP: Clear fully tempered float glass.

1. Thickness: 6.0 mm.
2. Provide safety glazing labeling.

2.10 INSULATING-GLASS TYPES

A. Glass Type IG-1: Low-e-coated, tinted insulating glass.

1. Overall Unit Thickness: 1 inch (25 mm).

2. Thickness of Each Glass Lite: 6.0 mm.
3. Outdoor Lite: Fully tempered float glass.
4. Interspace Content: Argon.
5. Indoor Lite: Fully tempered float glass.
6. Low-E Coating: Sputtered on second surface.
7. Visible Light Transmittance: 54 percent minimum.
8. Winter Nighttime U-Factor: 0.29 maximum.
9. Summer Daytime U-Factor: 0.27 maximum.
10. Solar Heat Gain Coefficient: 0.29 maximum.
11. Provide safety glazing labeling.

2.11 FIRE-PROTECTION- AND FIRE-RESISTANCE-RATED GLAZING TYPES (FG)

A. Glass Type : D-20 fire-rated glazing; laminated ceramic glazing.

B. Glass Type : D-H-45 and D-H-T-45 fire-rated glazing; laminated ceramic glazing.

C. Glass Type : D-H-W-90 fire-rated glazing; laminated ceramic glazing.

PART 3 - EXECUTION

3.1 EXAMINATION

A. Examine framing, glazing channels, and stops, with Installer present, for compliance with the following:

1. Manufacturing and installation tolerances, including those for size, squareness, and offsets at corners.
2. Presence and functioning of weep systems.
3. Minimum required face and edge clearances.
4. Effective sealing between joints of glass-framing members.

B. Proceed with installation only after unsatisfactory conditions have been corrected.

3.2 PREPARATION

A. Clean glazing channels and other framing members receiving glass immediately before glazing. Remove coatings not firmly bonded to substrates.

B. Examine glazing units to locate exterior and interior surfaces. Label or mark units as needed so that exterior and interior surfaces are readily identifiable. Do not use materials that will leave visible marks in the completed work.

3.3 GLAZING, GENERAL

A. Comply with combined written instructions of manufacturers of glass, sealants, gaskets, and other glazing materials, unless more stringent requirements are indicated, including those in referenced glazing publications.

B. Adjust glazing channel dimensions as required by Project conditions during installation to provide necessary bite on glass, minimum edge and face clearances, and adequate sealant thicknesses, with reasonable tolerances.

C. Protect glass edges from damage during handling and installation. Remove damaged glass from Project site and legally dispose of off Project site. Damaged glass is glass with edge damage or other imperfections that, when installed, could weaken glass and impair performance and appearance.

D. Apply primers to joint surfaces where required for adhesion of sealants, as determined by preconstruction testing.

E. Install setting blocks in sill rabbets, sized and located to comply with referenced glazing publications, unless otherwise required by glass manufacturer. Set blocks in thin course of compatible sealant suitable for heel bead.

F. Do not exceed edge pressures stipulated by glass manufacturers for installing glass lites.

G. Provide spacers for glass lites where length plus width is larger than 50 inches (1270 mm).

1. Locate spacers directly opposite each other on both inside and outside faces of glass. Install correct size and spacing to preserve required face clearances, unless gaskets and glazing tapes are used that have demonstrated ability to maintain required face clearances and to comply with system performance requirements.
2. Provide 1/8-inch (3-mm) minimum bite of spacers on glass and use thickness equal to sealant width. With glazing tape, use thickness slightly less than final compressed thickness of tape.

H. Provide edge blocking where indicated or needed to prevent glass lites from moving sideways in glazing channel, as recommended in writing by glass manufacturer and according to requirements in referenced glazing publications.

I. Set glass lites in each series with uniform pattern, draw, bow, and similar characteristics.

J. Set glass lites with proper orientation so that coatings face exterior or interior as specified.

K. Where wedge-shaped gaskets are driven into one side of channel to pressurize sealant or gasket on opposite side, provide adequate anchorage so gasket cannot walk out when installation is subjected to movement.

L. Square cut wedge-shaped gaskets at corners and install gaskets in a manner recommended by gasket manufacturer to prevent corners from pulling away; seal corner joints and butt joints with sealant recommended by gasket manufacturer.

3.4 GASKET GLAZING (DRY)

A. Cut compression gaskets to lengths recommended by gasket manufacturer to fit openings exactly, with allowance for stretch during installation.

B. Insert soft compression gasket between glass and frame or fixed stop so it is securely in place with joints miter cut and bonded together at corners.

C. Installation with Drive-in Wedge Gaskets: Center glass lites in openings on setting blocks and press firmly against soft compression gasket by inserting dense compression gaskets formed and installed to lock in place against faces of removable stops. Start gasket applications at corners and work toward

centers of openings. Compress gaskets to produce a weathertight seal without developing bending stresses in glass. Seal gasket joints with sealant recommended by gasket manufacturer.

D. Installation with Pressure-Glazing Stops: Center glass lites in openings on setting blocks and press firmly against soft compression gasket. Install dense compression gaskets and pressure-glazing stops, applying pressure uniformly to compression gaskets. Compress gaskets to produce a weathertight seal without developing bending stresses in glass. Seal gasket joints with sealant recommended by gasket manufacturer.

E. Install gaskets so they protrude past face of glazing stops.

3.5 SEALANT GLAZING (WET)

A. Install continuous spacers, or spacers combined with cylindrical sealant backing, between glass lites and glazing stops to maintain glass face clearances and to prevent sealant from extruding into glass channel and blocking weep systems until sealants cure. Secure spacers or spacers and backings in place and in position to control depth of installed sealant relative to edge clearance for optimum sealant performance.

B. Force sealants into glazing channels to eliminate voids and to ensure complete wetting or bond of sealant to glass and channel surfaces.

C. Tool exposed surfaces of sealants to provide a substantial wash away from glass.

3.6 LOCK-STRIP GASKET GLAZING

A. Comply with ASTM C 716 and gasket manufacturer's written instructions. Provide supplementary wet seal and weep system unless otherwise indicated.

3.7 CLEANING AND PROTECTION

A. Protect exterior glass from damage immediately after installation by attaching crossed streamers to framing held away from glass. Do not apply markers to glass surface. Remove nonpermanent labels and clean surfaces.

B. Protect glass from contact with contaminating substances resulting from construction operations. If, despite such protection, contaminating substances do come into contact with glass, remove substances immediately as recommended in writing by glass manufacturer.

C. Examine glass surfaces adjacent to or below exterior concrete and other masonry surfaces at frequent intervals during construction, but not less than once a month, for buildup of dirt, scum, alkaline deposits, or stains; remove as recommended in writing by glass manufacturer.

D. Remove and replace glass that is broken, chipped, cracked, or abraded or that is damaged from natural causes, accidents, and vandalism, during construction period.

E. Wash glass on both exposed surfaces in each area of Project not more than four days before date scheduled for inspections that establish date of Substantial Completion. Wash glass as recommended in writing by glass manufacturer.

END OF SECTION 088000

SECTION 089000 - LOUVERS AND VENTS

PART 1 - GENERAL

1.1 RELATED DOCUMENTS

A. Drawings and general provisions of the Contract, including General and Supplementary Conditions and Division 1 Specification Sections, apply to this Section.

1.2 SUMMARY

A. This Section includes the following:

1. Fixed, extruded-aluminum louvers.
2. Wall vents (brick vents).

1.3 DEFINITIONS

A. Louver Terminology: Definitions of terms for metal louvers contained in AMCA 501 apply to this Section unless otherwise defined in this Section or in referenced standards.

B. Drainable-Blade Louver: Louver with blades having gutters that collect water and drain it to channels in jambs and mullions, which carry it to bottom of unit and away from opening.

1.4 PERFORMANCE REQUIREMENTS

A. Structural Performance: Provide louvers capable of withstanding the effects of gravity loads and the following loads and stresses within limits and under conditions indicated without permanent deformation of louver components, noise or metal fatigue caused by louver blade rattle or flutter, or permanent damage to fasteners and anchors. Wind pressures shall be considered to act on vertical projection of louvers.

1. Wind Loads: Determine loads based on pressures as indicated in the International Building Code.

B. Thermal Movements: Provide louvers that allow for thermal movements resulting from the following maximum change (range) in ambient and surface temperatures by preventing buckling, opening of joints, overstressing of components, failure of connections, and other detrimental effects. Base engineering calculation on surface temperatures of materials due to both solar heat gain and nighttime-sky heat loss.

1. Temperature Change (Range): 120 deg F, ambient; 180 deg F, material surfaces.

C. Air-Performance, Water-Penetration, Air-Leakage, and Wind-Driven Rain Ratings: Provide louvers complying with performance requirements indicated, as demonstrated by testing manufacturer's stock units identical to those provided, except for length and width according to AMCA 500-L.

1.5 SUBMITTALS

A. Product Data: For each type of product indicated.

B. Shop Drawings: For louvers and accessories. Include plans, elevations, sections, details, and attachments to other Work. Show blade profiles, angles, and spacing.

1. For installed louvers and vents indicated to comply with design loads, include structural analysis data signed and sealed by the qualified professional engineer responsible for their preparation.

C. Samples for Initial Selection: For units with factory-applied color finishes.

1.6 QUALITY ASSURANCE

A. Source Limitations: Obtain louvers and vents through one source from a single manufacturer where indicated to be of same type, design, or factory-applied color finish.

B. Welding: Qualify procedures and personnel according to the following:

1. AWS D1.2, "Structural Welding Code--Aluminum."

C. SMACNA Standard: Comply with recommendations in SMACNA's "Architectural Sheet Metal Manual" for fabrication, construction details, and installation procedures.

1.7 PROJECT CONDITIONS

A. Field Measurements: Verify louver openings by field measurements before fabrication and indicate measurements on Shop Drawings.

PART 2 - PRODUCTS

2.1 MANUFACTURERS

A. Manufacturers: Subject to compliance with requirements, provide products by one of the following:

1. Wall Vents (Brick Vents): **WV-1** (See Architectural Drawings for Designation)

a. Airline Products Co.
b. Airolite Company (The).
c. Greenheck.
d. Hohmann & Barnard, Inc.
e. Industrial Louvers, Inc.
f. Reliable Products; Hart & Cooley, Inc.

B. In other Part 2 articles where titles below introduce lists, the following requirements apply for product selection:

1. Products: Subject to compliance with requirements, provide one of the products specified.

2.2 MATERIALS

A. Aluminum Extrusions: ASTM B 221, alloy 6063-T5 or T-52.

B. Aluminum Sheet: ASTM B 209, alloy 3003 or 5005 with temper as required for forming, or as otherwise recommended by metal producer for required finish.

C. Aluminum Castings: ASTM B 26/B 26M, alloy 319.

D. Fasteners: Of same basic metal and alloy as fastened metal or 300 Series stainless steel, unless otherwise indicated. Do not use metals that are incompatible with joined materials.

1. Use types and sizes to suit unit installation conditions.
2. Use hex-head or Phillips pan-head screws for exposed fasteners, unless otherwise indicated.

E. Postinstalled Fasteners for Concrete and Masonry: Torque-controlled expansion anchors, made from stainless-steel components, with capability to sustain, without failure, a load equal to 4 times the loads imposed, for concrete, or 6 times the load imposed, for masonry, as determined by testing per ASTM E 488, conducted by a qualified independent testing agency.

F. Bituminous Paint: Cold-applied asphalt emulsion complying with ASTM D 1187.

2.3 FABRICATION, GENERAL

A. Assemble louvers in factory to minimize field splicing and assembly. Disassemble units as necessary for shipping and handling limitations. Clearly mark units for reassembly and coordinated installation.

B. Maintain equal louver blade spacing to produce uniform appearance.

C. Fabricate frames, including integral sills, to fit in openings of sizes indicated, with allowances made for fabrication and installation tolerances, adjoining material tolerances, and perimeter sealant joints.

1. Frame Type: Channel, unless otherwise indicated.

D. Include supports, anchorages, and accessories required for complete assembly.

E. Provide subsills made of same material as louvers or extended sills for recessed louvers.

F. Join frame members to each other and to fixed louver blades with fillet welds concealed from view, unless otherwise indicated or size of louver assembly makes bolted connections between frame members necessary.

2.4 FIXED, EXTRUDED-ALUMINUM LOUVERS

A. Horizontal Storm-Resistant Louver (See Architectural and Mechanical drawings for Louver sizes):

1. Products:

a. Basis of Design: Greenheck; Dual Drainable Model EHH-601.
b. Airline Products Co.
c. Airolite Company (The).
d. Hohmann & Barnard, Inc.
e. Industrial Louvers, Inc.
f. Reliable Products; Hart & Cooley, Inc.

2. Louver Depth: 6 inches.
3. Frame and Blade Nominal Thickness: As required to comply with structural performance requirements, but not less than 0.080 inch.
4. Performance Requirements:

a. Free Area: Not less than 7.58 square feet for 48-inch- wide by 48-inch- high louver.
b. Air Performance: Not more than 0.240-inch wg static pressure drop at 700-fpm free-area velocity.

5. AMCA Seal: Mark units with AMCA Certified Ratings Seal.

2.5 LOUVER SCREENS

A. General: Provide screen at each exterior louver.

1. Screen Location for Fixed Louvers: Interior face.
2. Screening Type: Insect screening.

B. Secure screens to louver frames with stainless-steel machine screws, spaced a maximum of 6 inches from each corner and at 12 inches o.c.

C. Louver Screen Frames: Fabricate with mitered corners to louver sizes indicated.

1. Metal: Same kind and form of metal as indicated for louver to which screens are attached. Reinforce extruded-aluminum screen frames at corners with clips.
2. Finish: Same finish as louver frames to which louver screens are attached.
3. Type: Rewirable frames with a driven spline or insert for securing screen mesh.

D. Louver Screening for Aluminum Louvers:

1. Insect Screening: Stainless steel, 18-by-18 mesh, 0.009-inch wire.

2.6 BLANK-OFF PANELS

A. Insulated, Blank-off Panels: Laminated metal-faced panels consisting of insulating core surfaced on back and front with metal sheets.

1. Thickness: 2 inches.
2. Metal Facing Sheets: Aluminum sheet, not less than 0.032-inch nominal thickness.
3. Insulating Core: Unfaced mineral-fiber or foamed-plastic rigid insulation board.
4. Edge Treatment: Trim perimeter edges of blank-off panels with louver manufacturer's standard extruded-aluminum-channel frames, not less than 0.080-inch nominal thickness, with corners mitered and with same finish as panels.
5. Seal perimeter joints between panel faces and louver frames with 1/8-by-l-inch PVC compression gaskets.
6. Panel Finish: Same finish applied to louvers.
7. Attach blank-off panels to back of louver frames with clips.

2.7 WALL VENTS (BRICK VENTS)

A. Extruded-Aluminum Wall Vents: Extruded-aluminum louvers and frames, not less than 0.125-inch nominal thickness, assembled by welding; with 18-by-14- mesh, aluminum insect screening on inside face; incorporating weep holes, continuous drip at sill, and integral waterstop on inside edge of sill; of load-bearing design and construction.

2.8 FINISHES, GENERAL

A. Comply with NAAMM's "Metal Finishes Manual for Architectural and Metal Products" for recommendations for applying and designating finishes.

B. Finish louvers after assembly.

2.9 ALUMINUM FINISHES

A. Finish designations prefixed by AA comply with system established by the Aluminum Association for designating aluminum finishes.

B. High-Performance Organic-Coating Finish: AA-C12C42R1x (Chemical Finish: cleaned with inhibited chemicals; Chemical Finish: acid-chromate-fluoride-phosphate conversion coating; Organic Coating: as

specified below). Prepare, pretreat, and apply coating to exposed metal surfaces to comply with coating and resin manufacturers' written instructions.

1. Fluoropolymer Three-Coat Coating System: Manufacturer's standard three-coat, thermocured system consisting of specially formulated inhibitive primer, fluoropolymer color coat, and clear fluoropolymer topcoat, with both color coat and clear topcoat containing not less than 70 percent polyvinylidene fluoride resin by weight; complying with AAMA 2605.

    a. Color and Gloss: Up to three (3) selections to match existing conditions as selected by Architect from manufacturer's full range.

PART 3 - EXECUTION

3.1 EXAMINATION

A. Examine substrates and openings, with Installer present, for compliance with requirements for installation tolerances and other conditions affecting performance.

1. Proceed with installation only after unsatisfactory conditions have been corrected.

3.2 PREPARATION

A. Coordinate setting drawings, diagrams, templates, instructions, and directions for installation of anchorages that are to be embedded in concrete or masonry construction. Coordinate delivery of such items to Project site.

3.3 INSTALLATION

A. Locate and place louvers and vents level, plumb, and at indicated alignment with adjacent work.

B. Use concealed anchorages where possible. Provide brass or lead washers fitted to screws where required to protect metal surfaces and to make a weathertight connection.

C. Form closely fitted joints with exposed connections accurately located and secured.

D. Provide perimeter reveals and openings of uniform width for sealants and joint fillers, as indicated.

E. Repair finishes damaged by cutting, welding, soldering, and grinding. Restore finishes so no evidence remains of corrective work. Return items that cannot be refinished in the field to the factory, make required alterations, and refinish entire unit or provide new units.

F. Protect galvanized and nonferrous-metal surfaces from corrosion or galvanic action by applying a heavy coating of bituminous paint on surfaces that will be in contact with concrete, masonry, or dissimilar metals.

G. Install concealed gaskets, flashings, joint fillers, and insulation as louver installation progresses, where weathertight louver joints are required. Comply with Division 7 Section "Joint Sealants" for sealants applied during louver installation.

3.4 ADJUSTING AND CLEANING

A. Clean exposed surfaces of louvers and vents that are not protected by temporary covering, to remove fingerprints and soil during construction period. Do not let soil accumulate until final cleaning.

B. Before final inspection, clean exposed surfaces with water and a mild soap or detergent not harmful to finishes. Thoroughly rinse surfaces and dry.

C. Restore louvers and vents damaged during installation and construction so no evidence remains of corrective work. If results of restoration are unsuccessful, as determined by Architect, remove damaged units and replace with new units.

1. Touch up minor abrasions in finishes with air-dried coating that matches color and gloss of, and is compatible with, factory-applied finish coating.

END OF SECTION 089000

SECTION 092216 - NON-STRUCTURAL METAL FRAMING

PART 1 - GENERAL

1.1 RELATED DOCUMENTS

A. Drawings and general provisions of the Contract, including General and Supplementary Conditions and Division 01 Specification Sections, apply to this Section.

1.2 SUMMARY

A. This Section includes non-load-bearing steel framing members for the following applications:

1. Interior framing systems (e.g., supports for partition walls, framed soffits, furring, etc.).
2. Interior suspension systems (e.g., supports for ceilings, suspended soffits, etc.).

1.3 SUBMITTALS

A. Product Data: For each type of product indicated.

1.4 QUALITY ASSURANCE

A. Fire-Test-Response Characteristics: For fire-resistance-rated assemblies that incorporate non-load-bearing steel framing, provide materials and construction identical to those tested in assembly indicated according to ASTM E 119 by an independent testing agency.

B. STC-Rated Assemblies: For STC-rated assemblies, provide materials and construction identical to those tested in assembly indicated according to ASTM E 90 and classified according to ASTM E 413 by an independent testing agency.

PART 2 - PRODUCTS

2.1 NON-LOAD-BEARING STEEL FRAMING, GENERAL

A. Framing Members, General: Comply with ASTM C 754 for conditions indicated.

1. Steel Sheet Components: Comply with ASTM C 645 requirements for metal, unless otherwise indicated.
2. Protective Coating: ASTM A 653/A 653M, G60 (Z180), hot-dip galvanized, unless otherwise indicated.

2.2 SUSPENSION SYSTEM COMPONENTS

A. Tie Wire: ASTM A 641/A 641M, Class 1 zinc coating, soft temper, 0.0625-inch- (1.59-mm-) diameter wire, or double strand of 0.0475-inch- (1.21-mm-) diameter wire.

B. Wire Hangers: ASTM A 641/A 641M, Class 1 zinc coating, soft temper, 0.162-inch (4.12-mm) diameter.

C. Carrying Channels: Cold-rolled, commercial-steel sheet with a base-metal thickness of 0.0538 inch (1.37 mm) and minimum 1/2-inch- (12.7-mm-) wide flanges.

1. Depth: 2 inches (51 mm).

D. Furring Channels (Furring Members):

1. Steel Studs: ASTM C 645.

   a. Minimum Base-Metal Thickness: 0.01790 (26 gauge).
   b. Depth: As indicated on Drawings.

2. Hat-Shaped, Rigid Furring Channels: ASTM C 645, 7/8 inch (22.2 mm) deep.

   a. Minimum Base Metal Thickness: 0.01790 (26 gauge).

E. Grid Suspension System for Ceilings: ASTM C 645, direct-hung system composed of main beams and cross-furring members that interlock.

1. Available Products: Subject to compliance with requirements, products that may be incorporated into the Work include, but are not limited to, the following:

2. Products: Subject to compliance with requirements, provide one of the following:

   a. Armstrong World Industries, Inc.; Drywall Grid Systems.
   b. Chicago Metallic Corporation; 640-C Drywall Furring System.
   c. USG Corporation; Drywall Suspension System.

2.3 STEEL FRAMING FOR FRAMED ASSEMBLIES

A. Steel Studs and Runners: ASTM C 645.

1. Minimum Base-Metal Thickness: 0.01790 (26 gauge).
   1) See Framing Schedule for additional requirements.
2. Depth: As indicated on Drawings.

B. Slip-Type Head Joints: Where indicated, provide one of the following:

1. Single Long-Leg Runner System: ASTM C 645 top runner with 2-inch- (50.8-mm-) deep flanges in thickness not less than indicated for studs, installed with studs friction fit into top runner and with continuous bridging located within 12 inches (305 mm) of the top of studs to provide lateral bracing.
2. Double-Runner System: ASTM C 645 top runners, inside runner with 2-inch- (50.8-mm-) deep flanges in thickness not less than indicated for studs and fastened to studs, and outer runner sized to friction fit inside runner.

C. Hat-Shaped, Rigid Furring Channels: ASTM C 645.

1. Minimum Base Metal Thickness: 0.0312 inch (0.79 mm).
2. Depth: As indicated on Drawings.

D. Resilient Furring Channels: 1/2-inch- (12.7-mm-) deep, steel sheet members designed to reduce sound transmission.

1. Configuration: Asymmetrical or hat shaped.

E. Cold-Rolled Furring Channels: 0.0538-inch (1.37-mm) bare-steel thickness, with minimum 1/2-inch- (12.7-mm-) wide flanges.

1. Depth: As indicated on Drawings or 3/4 inch (19.1 mm) minimum.
2. Furring Brackets: Adjustable, corrugated-edge type of steel sheet with minimum bare-steel thickness of 0.0312 inch (0.79 mm).

3. Tie Wire: ASTM A 641/A 641M, Class 1 zinc coating, soft temper, 0.0625-inch- (1.59-mm-) diameter wire, or double strand of 0.0475-inch- (1.21-mm-) diameter wire.

F. Z-Shaped Furring: With slotted or nonslotted web, face flange of 1-1/4 inches (31.8 mm), wall attachment flange of 7/8 inch (22.2 mm), minimum bare-metal thickness of 0.0179 inch (0.45 mm), and depth required to fit insulation thickness indicated.

2.4 AUXILIARY MATERIALS

A. General: Provide auxiliary materials that comply with referenced installation standards.

1. Fasteners for Metal Framing: Of type, material, size, corrosion resistance, holding power, and other properties required to fasten steel members to substrates.

B. Isolation Strip at Exterior Walls: Provide the following:

1. Foam Gasket: Adhesive-backed, closed-cell vinyl foam strips that allow fastener penetration without foam displacement, 1/8 inch (3.2 mm) thick, in width to suit steel stud size.

PART 3 - EXECUTION

3.1 EXAMINATION

A. Examine areas and substrates, with Installer present, and including welded hollow-metal frames, cast-in anchors, and structural framing, for compliance with requirements and other conditions affecting performance.

1. Proceed with installation only after unsatisfactory conditions have been corrected.

3.2 PREPARATION

A. Suspended Assemblies: Coordinate installation of suspension systems with installation of overhead structure to ensure that inserts and other provisions for anchorages to building structure have been installed to receive hangers at spacing required to support the Work and that hangers will develop their full strength.

1. Furnish concrete inserts and other devices indicated to other trades for installation in advance of time needed for coordination and construction.

3.3 INSTALLATION, GENERAL

A. Installation Standard: ASTM C 754, except comply with framing sizes and spacing indicated.

1. Gypsum Veneer Plaster Assemblies: Also comply with requirements in ASTM C 844 that apply to framing installation.

2. Gypsum Board Assemblies: Also comply with requirements in ASTM C 840 that apply to framing installation.

B. Install supplementary framing, and blocking to support fixtures, equipment services, heavy trim, grab bars, toilet accessories, furnishings, or similar construction.

C. Install bracing at terminations in assemblies.

D. Do not bridge building control and expansion joints with non-load-bearing steel framing members. Frame both sides of joints independently.

3.4 INSTALLING SUSPENSION SYSTEMS

A. Install suspension system components in sizes and spacings indicated on Drawings, but not less than those required by referenced installation standards for assembly types and other assembly components indicated.

B. Isolate suspension systems from building structure where they abut or are penetrated by building structure to prevent transfer of loading imposed by structural movement.

C. Suspend hangers from building structure as follows:

1. Install hangers plumb and free from contact with insulation or other objects within ceiling plenum that are not part of supporting structural or suspension system.

a. Splay hangers only where required to miss obstructions and offset resulting horizontal forces by bracing, countersplaying, or other equally effective means.

2. Where width of ducts and other construction within ceiling plenum produces hanger spacings that interfere with locations of hangers required to support standard suspension system members, install supplemental suspension members and hangers in the form of trapezes or equivalent devices.

a. Size supplemental suspension members and hangers to support ceiling loads within performance limits established by referenced installation standards.

3. Wire Hangers: Secure by looping and wire tying, either directly to structures or to inserts, eye screws, or other devices and fasteners that are secure and appropriate for substrate, and in a manner that will not cause hangers to deteriorate or otherwise fail.
4. Do not attach hangers to steel roof deck.
5. Do not attach hangers to permanent metal forms. Furnish cast-in-place hanger inserts that extend through forms.
6. Do not attach hangers to rolled-in hanger tabs of composite steel floor deck.
7. Do not connect or suspend steel framing from ducts, pipes, or conduit.

D. Fire-Resistance-Rated Assemblies: Wire tie furring channels to supports.

E. Grid Suspension Systems: Attach perimeter wall track or angle where grid suspension systems meet vertical surfaces. Mechanically join main beam and cross-furring members to each other and butt-cut to fit into wall track.

F. Installation Tolerances: Install suspension systems that are level to within 1/8 inch in 12 feet (3 mm in 3.6 m) measured lengthwise on each member that will receive finishes and transversely between parallel members that will receive finishes.

3.5 INSTALLING FRAMED ASSEMBLIES

A. Where studs are installed directly against exterior masonry walls or dissimilar metals at exterior walls, install isolation strip between studs and exterior wall.

B. Install studs so flanges within framing system point in same direction.

1. Space studs as scheduled in structural drawings.

C. Install tracks (runners) at floors and overhead supports. Extend framing full height to structural supports or substrates above suspended ceilings, except where partitions are indicated to terminate at suspended ceilings. Continue framing around ducts penetrating partitions above ceiling.

1. Slip-Type Head Joints: Where framing extends to overhead structural supports, install to produce joints at tops of framing systems that prevent axial loading of finished assemblies.
2. Door Openings: Screw vertical studs at jambs to jamb anchor clips on door frames; install runner track section (for cripple studs) at head and secure to jamb studs.

   a. Install two studs at each jamb, unless otherwise indicated.
   b. Install cripple studs at head adjacent to each jamb stud, with a minimum 1/2-inch (12.7-mm) clearance from jamb stud to allow for installation of control joint in finished assembly.
   c. Extend jamb studs through suspended ceilings and attach to underside of overhead structure.

3. Other Framed Openings: Frame openings other than door openings the same as required for door openings, unless otherwise indicated. Install framing below sills of openings to match framing required above door heads.
4. Fire-Resistance-Rated Partitions: Install framing to comply with fire-resistance-rated assembly indicated and support closures and to make partitions continuous from floor to underside of solid structure.
5. Sound-Rated Partitions: Install framing to comply with sound-rated assembly indicated.

D. Direct Furring:

1. Screw to wood framing.
2. Attach to concrete or masonry with stub nails, screws designed for masonry attachment, or powder-driven fasteners spaced 24 inches (610 mm) o.c.

E. Z-Furring Members:

1. Erect insulation (specified in Division 07 Section "Thermal Insulation") vertically and hold in place with Z-furring members spaced 24 inches (610 mm) o.c.
2. Except at exterior corners, securely attach narrow flanges of furring members to wall with concrete stub nails, screws designed for masonry attachment, or powder-driven fasteners spaced 24 inches (600 mm) o.c.
3. At exterior corners, attach wide flange of furring members to wall with short flange extending beyond corner; on adjacent wall surface, screw-attach short flange of furring channel to web of attached channel. At interior corners, space second member no more than 12 inches (300 mm) from corner and cut insulation to fit.

F. Installation Tolerance: Install each framing member so fastening surfaces vary not more than 1/8 inch (3 mm) from the plane formed by faces of adjacent framing.

3.6 FRAMING SCHEDULE

A. Provide metal framing in thickness recommended by manufacturer for height and loading combination but not less than the following.

B. Heights up to 8 feet.
1. 3 5/8” metal framing; provide minimum 0.0209 inch (25 gauge).
2. 6” metal framing; provide minimum 0.0179 inch (26 gauge).

C. Heights up to 12 feet.

1. 3 5/8” metal framing; provide minimum 0.0270 inch (22 gauge).
2. 6” metal framing; provide minimum 0.0179 inch (26 gauge).

D. Heights up to 16 feet.
1. 6” & 8” metal framing; provide minimum 0.0270 inch (22 gauge).

END OF SECTION 092216

SECTION 092900 - GYPSUM BOARD

PART 1 - GENERAL

1.1 RELATED DOCUMENTS

A. Drawings and general provisions of the Contract, including General and Supplementary Conditions and Division 01 Specification Sections, apply to this Section.

1.2 SUMMARY

A. This Section includes the following:

1. Interior Gypsum Board.

1.3 SUBMITTALS

A. Product Data: For each type of product indicated.

1.4 QUALITY ASSURANCE

A. Fire-Resistance-Rated Assemblies: For fire-resistance-rated assemblies, provide materials and construction identical to those tested in assembly indicated according to ASTM E 119 by an independent testing agency.

B. STC-Rated Assemblies: For STC-rated assemblies, provide materials and construction identical to those tested in assembly indicated according to ASTM E 90 and classified according to ASTM E 413 by an independent testing agency.

C. Source Limitations for Gypsum Board and Accessories: Obtain all products noted within this specification section from single manufacturer.

1.5 STORAGE AND HANDLING

A. Store materials inside under cover and keep them dry and protected against damage from weather, condensation, direct sunlight, construction traffic, and other causes. Stack panels flat to prevent sagging.

1.6 PROJECT CONDITIONS

A. Environmental Limitations: Comply with ASTM C 840 requirements or gypsum board manufacturer's written recommendations, whichever are more stringent.

B. Do not install interior products until installation areas are enclosed and conditioned.

C. Do not install panels that are wet, those that are moisture damaged, and those that are mold damaged.

1. Indications that panels are wet or moisture damaged include, but are not limited to, discoloration, sagging, or irregular shape.
2. Indications that panels are mold damaged include, but are not limited to, fuzzy or splotchy surface contamination and discoloration.

PART 2 - PRODUCTS

2.1 PANELS, GENERAL

A. Size: Provide in maximum lengths and widths available that will minimize joints in each area and that correspond with support system indicated.

2.2 INTERIOR GYPSUM BOARD

A. General: Complying with ASTM C 36/C 36M or ASTM C 1396/C 1396M, as applicable to type of gypsum board indicated and whichever is more stringent.

1. Available Manufacturers: Subject to compliance with requirements, manufacturers offering products that may be incorporated into the Work include, but are not limited to, the following:
2. Manufacturers: Subject to compliance with requirements, provide products by one of the following:

a. G-P Gypsum.
b. National Gypsum Company.
c. USG Corporation.

B. Regular Type:

1. Thickness: 1/4 inch (6.4 mm) and 5/8 inch (15.9 mm).
2. Long Edges: Tapered.

C. Type X:

1. Thickness: 5/8 inch (15.9 mm).
2. Long Edges: Tapered.

D. Ceiling Type: Manufactured to have more sag resistance than regular-type gypsum board.

1. Thickness: 1/2 inch (12.7 mm).
2. Long Edges: Tapered.

E. Impact and Abuse-Resistant Type: Manufactured to produce greater resistance to surface indentation, through-penetration (impact resistance), and abrasion than standard, regular-type and Type X gypsum board.

1. Core: 5/8 inch (15.9 mm), Type X.
2. Long Edges: Tapered.

F. Moisture- and Mold-Resistant Type: With moisture- and mold-resistant core and surfaces.

1. Core: 5/8 inch (15.9 mm), Type X.
2. Long Edges: Tapered.
3. Subject to compliance with requirements, provide one of the following products:

a. USG’s “SHEETROCK Brand HUMITEK” or “SHEETROCK Brand MOLD TOUGH"
b. National Gypsum’s “XP Wallboard.”
c. G-P’s “DensArmor Interior Guard.”

G. Paperless Interior Type: With moisture- and mold-resistant core and paperless face.

1. Core: 5/8 inch (15.9 mm), Type X.
2. Long Edges: Tapered.
3. Subject to compliance with requirements, provide one of the following products:

    a. USG's "FIBERROCK CLIMA TOUGH Interior Board."
    b. G-P's "DensArmor Plus Interior Drywall."

2.3 TRIM ACCESSORIES

A. Interior Trim: ASTM C 1047.

1. Material: Galvanized or aluminum-coated steel sheet or rolled zinc or Plastic (only where noted on drawings).
2. Shapes:

    a. Cornerbead.
    b. Bullnose bead.
    c. LC-Bead: J-shaped; exposed long flange receives joint compound.
    d. L-Bead: L-shaped; exposed long flange receives joint compound.
    e. U-Bead: J-shaped; exposed short flange does not receive joint compound.
    f. Expansion (control) joint.
    g. Molding End Closure: Provide Fry Reglet DMEC-4875

2.4 JOINT TREATMENT MATERIALS

A. General: Comply with ASTM C 475/C 475M.

B. Joint Tape:

1. Interior Gypsum Wallboard: Paper.
2. Interior Gypsum Wallboard: Fiberglass.

C. Joint Compound for Interior Gypsum Wallboard: For each coat use formulation that is compatible with other compounds applied on previous or for successive coats.

1. Prefilling: At open joints and damaged surface areas, use setting-type taping compound.
2. Embedding and First Coat: For embedding tape and first coat on joints, fasteners, and trim flanges, use drying-type, all-purpose compound.

    a. Use setting-type compound for installing paper-faced metal trim accessories.

3. Fill Coat: For second coat, use drying-type, all-purpose compound.
4. Finish Coat: For third coat, use drying-type, all-purpose compound.
5. Skim Coat: For final coat of Level 5 finish, use setting-type, sandable topping compound.

2.5 AUXILIARY MATERIALS

A. General: Provide auxiliary materials that comply with referenced installation standards and manufacturer's written recommendations.

B. Laminating Adhesive: Adhesive or joint compound recommended for directly adhering gypsum panels to continuous substrate.

1. Use adhesives that have a VOC content of 50 g/L or less when calculated according to 40 CFR 59, Subpart D (EPA Method 24).

C. Steel Drill Screws: ASTM C 1002, unless otherwise indicated.

1. Use screws complying with ASTM C 954 for fastening panels to steel members from 0.033 to 0.112 inch (0.84 to 2.84 mm) thick.

D. Acoustical Sealant: As specified in Division 07 Section "Joint Sealants."

E. Thermal and Acoustical Insulation: As specified in Division 07 Section "Building Insulation."

PART 3 - EXECUTION

3.1 EXAMINATION

A. Examine areas and substrates, with Installer present, and including welded hollow-metal frames and framing, for compliance with requirements and other conditions affecting performance.

B. Examine panels before installation. Reject panels that are wet, moisture damaged, and mold damaged.

C. Proceed with installation only after unsatisfactory conditions have been corrected.

3.2 APPLYING AND FINISHING PANELS, GENERAL

A. Comply with ASTM C 840.

B. Install ceiling panels across framing to minimize the number of abutting end joints and to avoid abutting end joints in central area of each ceiling. Stagger abutting end joints of adjacent panels not less than one framing member.

C. Install panels with face side out. Butt panels together for a light contact at edges and ends with not more than 1/16 inch (1.5 mm) of open space between panels. Do not force into place.

D. Locate edge and end joints over supports, except in ceiling applications where intermediate supports or gypsum board back-blocking is provided behind end joints. Do not place tapered edges against cut edges or ends. Stagger vertical joints on opposite sides of partitions. Do not make joints other than control joints at corners of framed openings.

E. Form control and expansion joints with space between edges of adjoining gypsum panels.

F. Cover both faces of support framing with gypsum panels in concealed spaces (above ceilings, etc.), except in chases braced internally.

1. Unless concealed application is indicated or required for sound, fire, air, or smoke ratings, coverage may be accomplished with scraps of not less than 8 sq. ft. (0.7 sq. m) in area.

2. Fit gypsum panels around ducts, pipes, and conduits.

3. Where partitions intersect structural members projecting below underside of floor/roof slabs and decks, cut gypsum panels to fit profile formed by structural members; allow 1/4- to 3/8-inch- (6.4- to 9.5-mm-) wide joints to install sealant.

G. Isolate perimeter of gypsum board applied to non-load-bearing partitions at structural abutments, except floors. Provide 1/4- to 1/2-inch- (6.4- to 12.7-mm-) wide spaces at these locations, and trim edges with edge trim where edges of panels are exposed. Seal joints between edges and abutting structural surfaces with acoustical sealant.

H. Attachment to Steel Framing: Attach panels so leading edge or end of each panel is attached to open (unsupported) edges of stud flanges first.

I. Wood Framing: Install gypsum panels over wood framing, with floating internal corner construction. Do not attach gypsum panels across the flat grain of wide-dimension lumber, including floor joists and headers. Float gypsum panels over these members, or provide control joints to counteract wood shrinkage.

J. STC-Rated Assemblies: Seal construction at perimeters, behind control joints, and at openings and penetrations with a continuous bead of acoustical sealant. Install acoustical sealant at both faces of partitions at perimeters and through penetrations. Comply with ASTM C 919 and with manufacturer's written recommendations for locating edge trim and closing off sound-flanking paths around or through assemblies, including sealing partitions above acoustical ceilings.

3.3 APPLYING INTERIOR GYPSUM BOARD

A. Install interior gypsum board in the following locations:

1. Regular Type: See wall types, finish schedule and floor plans for designated areas.
2. Type X: See wall types, finish schedule and floor plans for designated areas and where required for fire-resistance rated assembly.
3. Ceiling Type: See finish schedule and reflected ceiling plans for designated areas.
4. Abuse-Resistant Type: See wall types, finish schedule, and floor plans for designated areas, provide fire-resistance type where required for a rated assembly.
5. Moisture- and Mold-Resistant Type: Required at all shower, toilet rooms and kitchen areas.
6. Paperless Interior Type: Required at all basement areas.

B. Single-Layer Application:

1. On ceilings, apply gypsum panels before wall/partition board application to greatest extent possible and at right angles to framing, unless otherwise indicated.
2. On partitions/walls, apply gypsum panels horizontally (perpendicular to framing), unless otherwise indicated or required by fire-resistance-rated assembly, and minimize end joints.

    a. Stagger abutting end joints not less than one framing member in alternate courses of panels.
    b. At stairwells and other high walls, install panels horizontally, unless otherwise indicated or required by fire-resistance-rated assembly.

3. On Z-furring members, apply gypsum panels vertically (parallel to framing) with no end joints. Locate edge joints over furring members.
4. Fastening Methods: Apply gypsum panels to supports with steel drill screws.

C. Multilayer Application:

1. On ceilings, apply gypsum board indicated for base layers before applying base layers on walls/partitions; apply face layers in same sequence. Apply base layers at right angles to framing members and offset face-layer joints 1 framing member, 16 inches (400 mm) minimum, from parallel base-layer joints, unless otherwise indicated or required by fire-resistance-rated assembly.

2. On partitions/walls, apply gypsum board indicated for base layers and face layers vertically (parallel to framing) with joints of base layers located over stud or furring member and face-layer joints offset at least one stud or furring member with base-layer joints, unless otherwise indicated or required by fire-resistance-rated assembly. Stagger joints on opposite sides of partitions.

3. On Z-furring members, apply base layer vertically (parallel to framing) and face layer either vertically (parallel to framing) or horizontally (perpendicular to framing) with vertical joints offset at least one furring member. Locate edge joints of base layer over furring members.

4. Fastening Methods: Fasten base layers and face layers separately to supports with screws.

D. Laminating to Substrate: Where gypsum panels are indicated as directly adhered to a substrate (other than studs, joists, furring members, or base layer of gypsum board), comply with gypsum board manufacturer's written recommendations and temporarily brace or fasten gypsum panels until fastening adhesive has set.

3.4 INSTALLING TRIM ACCESSORIES

A. General: For trim with back flanges intended for fasteners, attach to framing with same fasteners used for panels. Otherwise, attach trim according to manufacturer's written instructions.

B. Control Joints: Install control joints according to ASTM C 840 and in specific locations approved by Architect for visual effect.

C. Interior Trim: Install in the following locations:

1. Cornerbead: Use at outside corners, unless otherwise indicated.
2. Bullnose Bead: Use at outside corners.
3. LC-Bead: Use at exposed panel edges.
4. L-Bead: Use where indicated.
5. U-Bead: Use at exposed panel edges.
6. Molding End Closures: Use where partitions intersect a window or curtain wall.

3.5 FINISHING GYPSUM BOARD

A. General: Treat gypsum board joints, interior angles, edge trim, control joints, penetrations, fastener heads, surface defects, and elsewhere as required to prepare gypsum board surfaces for decoration. Promptly remove residual joint compound from adjacent surfaces.

B. Prefill open joints and damaged surface areas.

C. Apply joint tape over gypsum board joints, except those with trim having flanges not intended for tape.

D. Paperless Interior Type: As recommended by Manufacturer.

E. Gypsum Board Finish Levels: Finish panels to levels indicated below and according to ASTM C 840:

1. Level 4: At panel surfaces that will be exposed to view, unless otherwise indicated.

a. Primer and its application to surfaces are specified in other Division 09 Sections.

3.6 PROTECTION

A. Protect installed products from damage from weather, condensation, direct sunlight, construction, and other causes during remainder of the construction period.

B. Remove and replace panels that are wet, moisture damaged, and mold damaged.

1. Indications that panels are wet or moisture damaged include, but are not limited to, discoloration, sagging, or irregular shape.

2. Indications that panels are mold damaged include, but are not limited to, fuzzy or splotchy surface contamination and discoloration.

END OF SECTION 092900

SECTION 093000 - TILING

PART 1 - GENERAL

1.1 RELATED DOCUMENTS

A. Drawings and general provisions of the Contract, including General and Supplementary Conditions and Division 01 Specification Sections, apply to this Section.

1.2 SUMMARY

A. Section Includes:

1. Ceramic tile.
2. Tile backing panels.

B. Related Sections:

1. Division 07 Section "Joint Sealants" for sealing of expansion, contraction, control, and isolation joints in tile surfaces.
2. Division 09 Section "Gypsum Board" for glass-mat, water-resistant backer board.

1.3 DEFINITIONS

A. General: Definitions in the ANSI A108 series of tile installation standards and in ANSI A137.1 apply to Work of this Section unless otherwise specified.

B. ANSI A108 Series: ANSI A108.01, ANSI A108.02, ANSI A108.1A, ANSI A108.1B, ANSI A108.1C, ANSI A108.4, ANSI A108.5, ANSI A108.6, ANSI A108.8, ANSI A108.9, ANSI A108.10, ANSI A108.11, ANSI A108.12, ANSI A108.13, ANSI A108.14, ANSI A108.15, ANSI A108.16, and ANSI A108.17, which are contained in "American National Standard Specifications for Installation of Ceramic Tile."

C. Module Size: Actual tile size plus joint width indicated.

D. Face Size: Actual tile size, excluding spacer lugs.

1.4 SUBMITTALS

A. Product Data: For each type of product indicated.

B. Samples for Initial Selection: For each type of tile and grout indicated. Include Samples of accessories involving color selection.

C. Samples for Verification:

1. Full-size units of each type and composition of tile and for each color and finish required.

2. Assembled samples mounted on a rigid panel, with grouted joints, for each type and composition of tile and for each color and finish required. Make samples at least 24 inches (600 mm) square, but not fewer than 4 tiles. Use grout of type and in color or colors approved for completed Work.

D. Qualification Data: For qualified Installer.

E. Master Grade Certificates: For each shipment, type, and composition of tile, signed by tile manufacturer and Installer.

1.5 QUALITY ASSURANCE

A. Source Limitations for Tile: Obtain tile from one source or producer.

1. Obtain tile of each type and color or finish from same production run and of consistent quality in appearance and physical properties for each contiguous area.

B. Source Limitations for Setting and Grouting Materials: Obtain ingredients of a uniform quality for each mortar, adhesive, and grout component from one manufacturer and each aggregate from one source or producer.

C. Source Limitations for Other Products: Obtain each of the following products specified in this Section from a single manufacturer for each product:

1. Joint sealants.
2. Cementitious backer units.
3. Metal edge strips.

1.6 DELIVERY, STORAGE, AND HANDLING

A. Deliver and store packaged materials in original containers with seals unbroken and labels intact until time of use. Comply with requirements in ANSI A137.1 for labeling tile packages.

B. Store tile and cementitious materials on elevated platforms, under cover, and in a dry location.

C. Store aggregates where grading and other required characteristics can be maintained and contamination can be avoided.

D. Store liquid materials in unopened containers and protected from freezing.

E. Handle tile that has temporary protective coating on exposed surfaces to prevent coated surfaces from contacting backs or edges of other units. If coating does contact bonding surfaces of tile, remove coating from bonding surfaces before setting tile.

1.7 PROJECT CONDITIONS

A. Environmental Limitations: Do not install tile until construction in spaces is complete and ambient temperature and humidity conditions are maintained at the levels indicated in referenced standards and manufacturer's written instructions.

1.8 EXTRA MATERIALS

A. Furnish extra materials that match and are from same production runs as products installed and that are packaged with protective covering for storage and identified with labels describing contents.

1. Tile and Trim Units: Furnish quantity of full-size units equal to 3 percent of amount installed for each type, composition, color, pattern, and size indicated.
2. Grout: Furnish quantity of grout equal to 3 percent of amount installed for each type, composition, and color indicated.

PART 2 - PRODUCTS

2.1 PRODUCTS, GENERAL

A. ANSI Ceramic Tile Standard: Provide tile that complies with ANSI A137.1 for types, compositions, and other characteristics indicated.

1. Provide tile complying with Standard grade requirements unless otherwise indicated.

B. ANSI Standards for Tile Installation Materials: Provide materials complying with ANSI A108.02, ANSI standards referenced in other Part 2 articles, ANSI standards referenced by TCA installation methods specified in tile installation schedules, and other requirements specified.

C. Factory Blending: For tile exhibiting color variations within ranges, blend tile in factory and package so tile units taken from one package show same range in colors as those taken from other packages and match approved Samples.

D. Mounting: For factory-mounted tile, provide back- or edge-mounted tile assemblies as standard with manufacturer unless otherwise indicated.

E. Factory-Applied Temporary Protective Coating: Where indicated under tile type, protect exposed surfaces of tile against adherence of mortar and grout by precoating with continuous film of petroleum paraffin wax, applied hot. Do not coat unexposed tile surfaces.

2.2 TILE PRODUCTS

A. Manufacturers: Subject to compliance with requirements, provide products by one of the following:

1. American Marazzi Tile, Inc.
2. American Olean; Division of Dal-Tile International Inc.
3. Daltile; Division of Dal-Tile International Inc.
4. Deutsche Steinzeug America, Inc.
5. Florida Tile Industries, Inc.
6. Florim USA.
7. Laufen.
8. Grupo Porcelanite.
9. Portobello America, Inc.
10. Seneca Tiles, Inc.
11. United States Ceramic Tile Company.

B. Tile Type CT-1: Glazed wall tile.

1. Module Size: 4-1/4 by 4-1/4 inches (108 by 108 mm).
2. Thickness: 5/16 inch (8 mm).
3. Face: Pattern of design indicated, with manufacturer's standard edges.
4. Finish: Bright, opaque glaze.
5. Tile Color: As selected by Architect from manufacturer's full range, 2 colors.
6. Grout Color: As selected by Architect from manufacturer's full range.
7. Trim Units: Coordinated with sizes and coursing of adjoining flat tile where applicable and matching characteristics of adjoining flat tile. Provide shapes as follows, selected from manufacturer's standard shapes:

    a. Base for Thin-Set Mortar Installations: Straight, module size 4-1/4 by 6 inches (108 by 152 mm).
    b. Wainscot Cap for Thin-Set Mortar Installations: Surface bullnose, module size 6 by 2 inches (152 by 51 mm).
    c. External Corners for Thin-Set Mortar Installations: Surface bullnose, same size as adjoining flat tile.
    d. Internal Corners: Field-butted square corners. For coved base and cap use angle pieces designed to fit with stretcher shapes.

C. Ceramic Tile Type CT-2: Glazed floor tile.

1. Module Size: 2 by 2 inches (50.8 by 50.8 mm) to match existing.
2. Thickness: 1/4 inch (6.4 mm).
3. Face: Plain with cushion edges.
4. Finish: Bright, opaque glaze to match existing.
5. Tile Color and Pattern: To match existing.
6. Grout Color: To match existing.

2.3 TILE BACKING PANELS

A. Cementitious Backer Units: ANSI A118.9 or ASTM C 1325, in maximum lengths available to minimize end-to-end butt joints.

1. Products: Subject to compliance with requirements, provide one of the following:

    a. C-Cure; C-Cure Board 990.
    b. Custom Building Products; Wonderboard.
    c. FinPan, Inc.; Util-A-Crete Concrete Backer Board.
    d. USG Corporation; DUROCK Cement Board.

2. Thickness: 1/2 inch (12.7 mm).

2.4 SETTING MATERIALS

A. Dry-Set Portland Cement Mortar (Thin Set): ANSI A118.1.

1. For wall applications, provide mortar that complies with requirements for nonsagging mortar in addition to the other requirements in ANSI A118.1.

B. Latex-Portland Cement Mortar (Thin Set): ANSI A118.4.

1. Provide prepackaged, dry-mortar mix containing dry, redispersible, vinyl acetate or acrylic additive to which only water must be added at Project site.

2. For wall applications, provide mortar that complies with requirements for nonsagging mortar in addition to the other requirements in ANSI A118.4.

2.5 GROUT MATERIALS

A. Standard Cement Grout: ANSI A118.6.

B. Polymer-Modified Tile Grout: ANSI A118.7.

2.6 MIXING MORTARS AND GROUT

A. Mix mortars and grouts to comply with referenced standards and mortar and grout manufacturers' written instructions.

B. Add materials, water, and additives in accurate proportions.

C. Obtain and use type of mixing equipment, mixer speeds, mixing containers, mixing time, and other procedures to produce mortars and grouts of uniform quality with optimum performance characteristics for installations indicated.

PART 3 - EXECUTION

3.1 EXAMINATION

A. Examine substrates, areas, and conditions where tile will be installed, with Installer present, for compliance with requirements for installation tolerances and other conditions affecting performance of installed tile.

1. Verify that substrates for setting tile are firm, dry, clean, free of coatings that are incompatible with tile-setting materials including curing compounds and other substances that contain soap, wax, oil, or silicone; and comply with flatness tolerances required by ANSI A108.01 for installations indicated.
2. Verify that installation of grounds, anchors, recessed frames, electrical and mechanical units of work, and similar items located in or behind tile has been completed.

B. Proceed with installation only after unsatisfactory conditions have been corrected.

3.2 TILE INSTALLATION

A. Comply with TCA's "Handbook for Ceramic Tile Installation" for TCA installation methods specified in tile installation schedules. Comply with parts of the ANSI A108 Series "Specifications for Installation of Ceramic Tile" that are referenced in TCA installation methods, specified in tile installation schedules, and apply to types of setting and grouting materials used.

B. Extend tile work into recesses and under or behind equipment and fixtures to form complete covering without interruptions unless otherwise indicated. Terminate work neatly at obstructions, edges, and corners without disrupting pattern or joint alignments.

C. Accurately form intersections and returns. Perform cutting and drilling of tile without marring visible surfaces. Carefully grind cut edges of tile abutting trim, finish, or built-in items for straight aligned

joints. Fit tile closely to electrical outlets, piping, fixtures, and other penetrations so plates, collars, or covers overlap tile.

D. Jointing Pattern: Lay tile in grid pattern unless otherwise indicated. Lay out tile work and center tile fields in both directions in each space or on each wall area. Lay out tile work to minimize the use of pieces that are less than half of a tile. Provide uniform joint widths unless otherwise indicated.

1. Where adjoining tiles on floor, base, walls, or trim are specified or indicated to be same size, align joints.
2. Where tiles are specified or indicated to be whole integer multiples of adjoining tiles on floor, base, walls, or trim, align joints unless otherwise indicated.

E. Joint Widths: Unless otherwise indicated, install tile with the following joint widths:

1. Glazed Wall Tile: 1/16 inch (1.6 mm).
2. Decorative Thin Wall Tile: 1/16 inch (1.6 mm).

F. Lay out tile wainscots to dimensions indicated or to next full tile beyond dimensions indicated.

G. Expansion Joints: Provide expansion joints and other sealant-filled joints, including control, contraction, and isolation joints, where indicated. Form joints during installation of setting materials, mortar beds, and tile. Do not saw-cut joints after installing tiles.

1. Where joints occur in concrete substrates, locate joints in tile surfaces directly above them.
2. Prepare joints and apply sealants to comply with requirements in Division 07 Section "Joint Sealants."

3.3 TILE BACKING PANEL INSTALLATION

A. Install cementitious backer units and treat joints according to ANSI A108.11 and manufacturer's written instructions for type of application indicated.

3.4 CLEANING AND PROTECTING

A. Cleaning: On completion of placement and grouting, clean all ceramic tile surfaces so they are free of foreign matter.

1. Remove grout residue from tile as soon as possible.
2. Clean grout smears and haze from tile according to tile and grout manufacturer's written instructions but no sooner than 10 days after installation. Use only cleaners recommended by tile and grout manufacturers and only after determining that cleaners are safe to use by testing on samples of tile and other surfaces to be cleaned. Protect metal surfaces and plumbing fixtures from effects of cleaning. Flush surfaces with clean water before and after cleaning.
3. Remove temporary protective coating by method recommended by coating manufacturer and that is acceptable to tile and grout manufacturer. Trap and remove coating to prevent drain clogging.

B. Protect installed tile work with kraft paper or other heavy covering during construction period to prevent staining, damage, and wear. If recommended by tile manufacturer, apply coat of neutral protective cleaner to completed tile walls and floors.

C. Before final inspection, remove protective coverings and rinse neutral protective cleaner from tile surfaces.

3.5 INTERIOR TILE INSTALLATION SCHEDULE

A. Interior Wall Installations, Masonry or Concrete:

B. Interior Wall Installations, Metal Studs or Furring:

1. Tile Installation W244: Thin-set mortar on cementitious backer units or fiber cement underlayment; TCA W244.

a. Tile Type: **CT-1**.
b. Thin-Set Mortar: Latex- portland cement mortar.
c. Grout: Standard or Polymer-modified unsanded cement grout.

END OF SECTION 093000

SECTION 095113 - ACOUSTICAL PANEL CEILINGS

PART 1 - GENERAL

1.1 RELATED DOCUMENTS

A. Drawings and general provisions of the Contract, including General and Supplementary Conditions and Division 1 Specification Sections, apply to this Section.

1.2 SUMMARY

A. This Section includes:

1. Acoustical panels and exposed suspension systems for ceilings.

1.3 DEFINITIONS

A. AC: Articulation Class.

B. CAC: Ceiling Attenuation Class.

C. LR: Light Reflectance coefficient.

D. NRC: Noise Reduction Coefficient.

1.4 SUBMITTALS

A. Product Data: For each type of product indicated.

B. Samples for Initial Selection: For components with factory-applied color finishes.

C. Maintenance Data: For finishes to include in maintenance manuals.

1.5 QUALITY ASSURANCE

A. Source Limitations: Obtain each type of acoustical ceiling panel and supporting suspension system through one source from a single manufacturer.

1.6 DELIVERY, STORAGE, AND HANDLING

A. Deliver acoustical panels, suspension system components, and accessories to Project site in original, unopened packages and store them in a fully enclosed, conditioned space where they will be protected against damage from moisture, humidity, temperature extremes, direct sunlight, surface contamination, and other causes.

B. Before installing acoustical panels, permit them to reach room temperature and a stabilized moisture content.

C. Handle acoustical panels carefully to avoid chipping edges or damaging units in any way.

1.7 PROJECT CONDITIONS

A. Environmental Limitations: Do not install acoustical panel ceilings until spaces are enclosed and weatherproof, wet work in spaces is complete and dry, work above ceilings is complete, and ambient

temperature and humidity conditions are maintained at the levels indicated for Project when occupied for its intended use.

1. Pressurized Plenums: Operate ventilation system for not less than 48 hours before beginning acoustical panel ceiling installation.

1.8 COORDINATION

A. Coordinate layout and installation of acoustical panels and suspension system with other construction that penetrates ceilings or is supported by them, including light fixtures, HVAC equipment, fire-suppression system, and partition assemblies.

1.9 EXTRA MATERIALS

A. Furnish extra materials described below that match products installed and that are packaged with protective covering for storage and identified with labels describing contents.

1. Acoustical Ceiling Panels: Full-size panels equal to 2.0 percent of quantity installed.
2. Suspension System Components: Quantity of each exposed component equal to 1.0 percent of quantity installed.

PART 2 - PRODUCTS

2.1 ACOUSTICAL PANELS, GENERAL

A. Acoustical Panel Standard: Provide manufacturer's standard panels of configuration indicated that comply with ASTM E 1264 classifications as designated by types, patterns, acoustical ratings, and light reflectances, unless otherwise indicated.

1. Mounting Method for Measuring NRC: Type E-400; plenum mounting in which face of test specimen is 15-3/4 inches away from test surface per ASTM E 795.

B. Acoustical Panel Colors and Patterns: Match appearance characteristics indicated for each product type.

1. Where appearance characteristics of acoustical panels are indicated by referencing pattern designations in ASTM E 1264 and not manufacturers' proprietary product designations, provide products selected by Architect from each manufacturer's full range that comply with requirements indicated for type, pattern, color, light reflectance, acoustical performance, edge detail, and size.

2.2 ACOUSTICAL PANELS FOR ACOUSTICAL PANEL CEILING (**ACT-1**)

A. Basis-of-Design Product: Subject to compliance with requirements, provide **Armstrong; Fine Fissured #1714** or a comparable product by one of the following:

1. BPB America Inc. USA.
2. Chicago Metallic Corp.
3. National Gypsum Company
4. United States Gypsum Company

B. Classification: Provide panels complying with ASTM E 1264 for type, form, and pattern as follows:

1. Type and Form: Type III, mineral base with vinyl painted finish; Form 2, water felted.
2. Pattern: CE (perforated, small holes and lightly textured).

C. Color: White.

D. LR: Not less than 0.85.

E. NRC: Not less than 0.70.

F. CAC: Not less than 40.

G. Edge/Joint Detail: Square.

H. Thickness: 3/4 inch.

I. Modular Size: 24 by 48 inches.

J. Recyclable Content: 35 – 58%.

K. Humidity Resistance: HumiGuard Plus

L. Anti-Microbial Protection: BioBlock+

2.3 ACOUSTICAL PANELS FOR ACOUSTICAL PANEL CEILING (**ACT-2**)

A. Basis-of-Design Product: Subject to compliance with requirements, provide **Armstrong; Cirrus #572** or a comparable product by one of the following:

1. BPB America Inc. USA.
2. Chicago Metallic Corp.
3. National Gypsum Company
4. United States Gypsum Company

B. Classification: Provide panels complying with ASTM E 1264 for type, form, and pattern as follows:

1. Type and Form: Type III, mineral base with vinyl painted finish; Form 1, nodular.
2. Pattern: E (lightly textured) and I (embossed).

C. Color: White.

D. LR: Not less than 0.86.

E. NRC: Not less than 0.70.

F. CAC: Not less than 40.

G. Edge/Joint Detail: Angled Tegular.

H. Thickness: 7/8 inch.

I. Modular Size: 24 by 24 inches.

J. Recyclable Content: 72 – 82%.

K. Humidity Resistance: HumiGuard Plus

L. Anti-Microbial Protection: BioBlock+.

2.4 HIGH-DENSITY, CERAMIC-AND MINERAL-BASE ACOUSTICAL PANELS WITH SCRUBBABLE FINISH FOR ACOUSTICAL PANEL CEILING **(ACT-3)**

A. Basis-of-Design Product: Subject to compliance with requirements, provide Armstrong: Fine Fissured Ceramaguard #605 or a comparable product by one of the following:

1. BPB America In. USA.
2. Chicago Metallic Corp.
3. National Gypsum Company
4. United States Gypsum Company

B. Classification: Provide panels complying with ASTM E 1264 for Type XX, other types; described as high-density, ceramic- and mineral-base panels with scrubbable finish, resistant to heat, moisture, and corrosive fumes.

1. Patterns: G (smooth).

C. Color: White.

D. LR: Not less than 0.80.

E. NRC: Not less than 0.10.

F. CAC: Not less than 40.

G. Edge Detail: Square.

H. Thickness: 5/8 inch.

I. Size: As indicated on Drawings.

2.5 SUSPENSION SYSTEMS, GENERAL

A. Metal Suspension System Standard: Provide manufacturer's standard direct-hung metal suspension systems of types, structural classifications, and finishes indicated that comply with applicable requirements in ASTM C 635.

B. Finishes and Colors, General: Comply with NAAMM's "Metal Finishes Manual for Architectural and Metal Products" for recommendations for applying and designating finishes. Provide manufacturer's standard factory-applied finish for type of system indicated.

1. High-Humidity Finish: Comply with ASTM C 635 requirements for "Coating Classification for Severe Environment Performance" where high-humidity finishes are indicated.

C. Attachment Devices: Size for five times the design load indicated in ASTM C 635, Table 1, "Direct Hung," unless otherwise indicated. Comply with seismic design requirements.

1. Anchors in Concrete: Anchors of type and material indicated below, with holes or loops for attaching hangers of type indicated and with capability to sustain, without failure, a load equal to five times that imposed by ceiling construction, as determined by testing per ASTM E 488 or ASTM E 1512 as applicable, conducted by a qualified testing and inspecting agency.

a. Type: Postinstalled expansion anchors.
b. Corrosion Protection: Stainless-steel components complying with ASTM F 593 and ASTM F 594, Group 1 Alloy 304 or 316 for bolts; Alloy 304 or 316 for anchor.

D. Wire Hangers, Braces, and Ties: Provide wires complying with the following requirements:
1. Stainless-Steel Wire: ASTM A 580/A 580M, Type 304, nonmagnetic.
2. Size: Select wire diameter so its stress at 3 times hanger design load (ASTM C 635, Table 1, "Direct Hung") will be less than yield stress of wire, but provide not less than 0.135-inch-diameter wire.

E. Hanger Rods: Mild steel, zinc coated or protected with rust-inhibitive paint.

2.6 METAL SUSPENSION SYSTEM FOR ACOUSTICAL PANEL CEILING

A. Basis-of-Design Product: Subject to compliance with requirements, provide **Armstrong; Prelude ML** or a comparable product by one of the following:

1. BPB America Inc. USA.
2. Chicago Metallic Corp.
3. National Gypsum Company
4. United States Gypsum Company

B. Wide-Face, Single-Web, Steel Suspension System: Main and cross runners roll formed from cold-rolled steel sheet electrolytically zinc coated, with prefinished flanges of width indicated.

1. Structural Classification: Intermediate-duty system.
2. Face Width and Finish: 15/16”, Painted white (Baked Polyester).
3. Profile: Exposed Tee

2.7 METAL EDGE MOLDINGS AND TRIM

A. Roll-Formed, Sheet-Metal Edge Moldings and Trim: Type and profile indicated or, if not indicated, manufacturer's standard moldings for edges and penetrations that comply with seismic design requirements; formed from sheet metal of same material, finish, and color as that used for exposed flanges of suspension system runners.

1. Provide manufacturer's standard edge moldings that fit acoustical panel edge details and suspension systems indicated and that match width and configuration of exposed runners, unless otherwise indicated.
2. For lay-in panels with reveal edge details, provide stepped edge molding that forms reveal of same depth and width as that formed between edge of panel and flange at exposed suspension member.
3. For circular penetrations of ceiling, provide edge moldings fabricated to diameter required to fit penetration exactly.

PART 3 - EXECUTION

3.1 EXAMINATION

A. Examine substrates, areas, and conditions, including structural framing to which acoustical panel ceilings attach or abut, with Installer present, for compliance with requirements specified in this and other Sections that affect ceiling installation and anchorage and with requirements for installation tolerances and other conditions affecting performance of acoustical panel ceilings.

1. Proceed with installation only after unsatisfactory conditions have been corrected.

3.2 PREPARATION

A. Measure each ceiling area and establish layout of acoustical panels to balance border widths at opposite edges of each ceiling. Avoid using less-than-half-width panels at borders, and comply with layout shown on reflected ceiling plans.

3.3 INSTALLATION

A. General: Install acoustical panel ceilings to comply with ASTM C 636 and seismic design requirements indicated, per manufacturer's written instructions and CISCA's "Ceiling Systems Handbook."

B. Suspend ceiling hangers from building's structural members and as follows:

1. Install hangers plumb and free from contact with insulation or other objects within ceiling plenum that are not part of supporting structure or of ceiling suspension system.
2. Splay hangers only where required to miss obstructions; offset resulting horizontal forces by bracing, countersplaying, or other equally effective means.
3. Where width of ducts and other construction within ceiling plenum produces hanger spacings that interfere with location of hangers at spacings required to support standard suspension system members, install supplemental suspension members and hangers in form of trapezes or equivalent devices.
4. Secure wire hangers to ceiling suspension members and to supports above with a minimum of three tight turns. Connect hangers directly either to structures or to inserts, eye screws, or other devices that are secure and appropriate for substrate and that will not deteriorate or otherwise fail due to age, corrosion, or elevated temperatures.
5. Do not support ceilings directly from permanent metal forms or floor deck. Fasten hangers to cast-in-place hanger inserts, postinstalled mechanical or adhesive anchors, or power-actuated fasteners that extend through forms into concrete.
6. When steel framing does not permit installation of hanger wires at spacing required, install carrying channels or other supplemental support for attachment of hanger wires.
7. Do not attach hangers to steel deck tabs.
8. Do not attach hangers to steel roof deck. Attach hangers to structural members.
9. Space hangers not more than 48 inches o.c. along each member supported directly from hangers, unless otherwise indicated; provide hangers not more than 8 inches from ends of each member.
10. Size supplemental suspension members and hangers to support ceiling loads within performance limits established by referenced standards and publications.

C. Secure bracing wires to ceiling suspension members and to supports with a minimum of four tight turns. Suspend bracing from building's structural members as required for hangers, without attaching to permanent metal forms, steel deck, or steel deck tabs. Fasten bracing wires into concrete with cast-in-place or postinstalled anchors.

D. Install edge moldings and trim of type indicated at perimeter of acoustical ceiling area and where necessary to conceal edges of acoustical panels.

1. Apply acoustical sealant in a continuous ribbon concealed on back of vertical legs of moldings before they are installed.
2. Screw attach moldings to substrate at intervals not more than 16 inches o.c. and not more than 3 inches from ends, leveling with ceiling suspension system to a tolerance of 1/8 inch in 12 feet. Miter corners accurately and connect securely.
3. Do not use exposed fasteners, including pop rivets, on moldings and trim.

E. Install suspension system runners so they are square and securely interlocked with one another. Remove and replace dented, bent, or kinked members.

F. Install acoustical panels with undamaged edges and fit accurately into suspension system runners and edge moldings. Scribe and cut panels at borders and penetrations to provide a neat, precise fit.

1. Arrange directionally patterned acoustical panels as follows:

   a. As indicated on reflected ceiling plans.

2. For square-edged panels, install panels with edges fully hidden from view by flanges of suspension system runners and moldings.
3. For reveal-edged panels on suspension system runners, install panels with bottom of reveal in firm contact with top surface of runner flanges.

3.4 CLEANING

A. Clean exposed surfaces of acoustical panel ceilings, including trim, edge moldings, and suspension system members. Comply with manufacturer's written instructions for cleaning and touchup of minor finish damage. Remove and replace ceiling components that cannot be successfully cleaned and repaired to permanently eliminate evidence of damage.

END OF SECTION 095113

SECTION 096513 - RESILIENT BASE AND ACCESSORIES

PART 1 - GENERAL

1.1 RELATED DOCUMENTS

A. Drawings and general provisions of the Contract, including General and Supplementary Conditions and Division 01 Specification Sections, apply to this Section.

1.2 SUMMARY

A. Section Includes:

1. Resilient base.

1.3 ACTION SUBMITTALS

A. Product Data: For each type of product.

B. Samples: For each exposed product and for each color and texture specified, not less than 12 inches (300 mm) long.

1.4 MAINTENANCE MATERIAL SUBMITTALS

A. Furnish extra materials that match products installed and that are packaged with protective covering for storage and identified with labels describing contents.

1. Furnish not less than 10 linear feet (3 linear m) for every 500 linear feet (150 linear m) or fraction thereof, of each type, color, pattern, and size of resilient product installed.

1.5 DELIVERY, STORAGE, AND HANDLING

A. Store resilient products and installation materials in dry spaces protected from the weather, with ambient temperatures maintained within range recommended by manufacturer, but not less than 50 deg F (10 deg C) or more than 90 deg F (32 deg C).

1.6 FIELD CONDITIONS

A. Maintain ambient temperatures within range recommended by manufacturer, but not less than 70 deg F (21 deg C) or more than 95 deg F (35 deg C), in spaces to receive resilient products during the following time periods:

1. 48 hours before installation.
2. During installation.
3. 48 hours after installation.

B. After installation and until Substantial Completion, maintain ambient temperatures within range recommended by manufacturer, but not less than 55 deg F (13 deg C) or more than 95 deg F (35 deg C).

C. Install resilient products after other finishing operations, including painting, have been completed.

PART 2 - PRODUCTS

2.1 VINYL BASE **(R)**

A. Manufacturers: Subject to compliance with requirements, provide products by one of the following:

1. Armstrong World Industries, Inc.
2. Burke Mercer Flooring Products, Division of Burke Industries Inc.
3. Johnsonite; A Tarkett Company.
4. Roppe Corporation, USA.

B. Product Standard: ASTM F 1861, Type TV (vinyl, thermoplastic).

1. Group: I (solid, homogeneous).
2. Style B, Cove.

C. Minimum Thickness: 0.125 inch (3.2 mm).

D. Height: 4 inches (102 mm).

E. Lengths: Cut lengths 48 inches (1219 mm) long or coils in manufacturer's standard length.

F. Outside Corners: Job formed or preformed.

G. Inside Corners: Job formed or preformed.

H. Colors and Patterns: As selected by Architect from full range of industry colors.

2.2 INSTALLATION MATERIALS

A. Trowelable Leveling and Patching Compounds: Latex-modified, portland cement based or blended hydraulic-cement-based formulation provided or approved by resilient-product manufacturer for applications indicated.

B. Adhesives: Water-resistant type recommended by resilient-product manufacturer for resilient products and substrate conditions indicated.

PART 3 - EXECUTION

3.1 EXAMINATION

A. Examine substrates, with Installer present, for compliance with requirements for maximum moisture content and other conditions affecting performance of the Work.

1. Verify that finishes of substrates comply with tolerances and other requirements specified in other Sections and that substrates are free of cracks, ridges, depressions, scale, and foreign deposits that might interfere with adhesion of resilient products.

B. Proceed with installation only after unsatisfactory conditions have been corrected.

1. Installation of resilient products indicates acceptance of surfaces and conditions.

3.2 PREPARATION

A. Prepare substrates according to manufacturer's written instructions to ensure adhesion of resilient products.

B. Fill cracks, holes, and depressions in substrates with trowelable leveling and patching compound; remove bumps and ridges to produce a uniform and smooth substrate.

C. Do not install resilient products until they are the same temperature as the space where they are to be installed.

1. At least 48 hours in advance of installation, move resilient products and installation materials into spaces where they will be installed.

D. Immediately before installation, sweep and vacuum clean substrates to be covered by resilient products.

3.3 RESILIENT BASE INSTALLATION

A. Comply with manufacturer's written instructions for installing resilient base.

B. Apply resilient base to walls, columns, pilasters, casework and cabinets in toe spaces, and other permanent fixtures in rooms and areas where base is required.

C. Install resilient base in lengths as long as practical without gaps at seams and with tops of adjacent pieces aligned.

D. Tightly adhere resilient base to substrate throughout length of each piece, with base in continuous contact with horizontal and vertical substrates.

E. Do not stretch resilient base during installation.

F. On masonry surfaces or other similar irregular substrates, fill voids along top edge of resilient base with manufacturer's recommended adhesive filler material.

G. Preformed Corners: Install preformed corners before installing straight pieces.

H. Job-Formed Corners:

1. Outside Corners: Use straight pieces of maximum lengths possible and form with returns not less than 3 inches (76 mm) in length.

a. Form without producing discoloration (whitening) at bends.

2. Inside Corners: Use straight pieces of maximum lengths possible and form with returns not less than 3 inches (76 mm) in length.

a. Miter corners to minimize open joints.

3.4 RESILIENT ACCESSORY INSTALLATION

A. Comply with manufacturer's written instructions for installing resilient accessories.

B. Resilient Molding Accessories: Butt to adjacent materials and tightly adhere to substrates throughout length of each piece. Install reducer strips at edges of floor covering that would otherwise be exposed.

3.5 CLEANING AND PROTECTION

A. Comply with manufacturer's written instructions for cleaning and protecting resilient products.

B. Perform the following operations immediately after completing resilient-product installation:

1. Remove adhesive and other blemishes from exposed surfaces.
2. Sweep and vacuum horizontal surfaces thoroughly.
3. Damp-mop horizontal surfaces to remove marks and soil.

C. Protect resilient products from mars, marks, indentations, and other damage from construction operations and placement of equipment and fixtures during remainder of construction period.

D. Floor Polish: Remove soil, visible adhesive, and surface blemishes from resilient stair treads before applying liquid floor polish.

1. Apply one coat(s).

E. Cover resilient products subject to wear and foot traffic until Substantial Completion.

END OF SECTION 096513

SECTION 096519 - RESILIENT TILE FLOORING

PART 1 - GENERAL

1.1 RELATED DOCUMENTS

A. Drawings and general provisions of the Contract, including General and Supplementary Conditions and Division 01 Specification Sections, apply to this Section.

1.2 SUMMARY

A. Section Includes:

1. Vinyl composition floor tile.

1.3 ACTION SUBMITTALS

A. Product Data: For each type of product.

B. Samples for Initial Selection: For each type of floor tile indicated.

C. Samples for Verification: Full-size units of each color and pattern of floor tile required.

1.4 INFORMATIONAL SUBMITTALS

A. Qualification Data: For Installer.

1.5 CLOSEOUT SUBMITTALS

A. Maintenance Data: For each type of floor tile to include in maintenance manuals.

1.6 MAINTENANCE MATERIAL SUBMITTALS

A. Furnish extra materials that match products installed and that are packaged with protective covering for storage and identified with labels describing contents.

1. Floor Tile: Furnish one box for every 50 boxes or fraction thereof, of each type, color, and pattern of floor tile installed.

1.7 QUALITY ASSURANCE

A. Installer Qualifications: A qualified installer who employs workers for this Project who are competent in techniques required by manufacturer for floor tile installation and seaming method indicated.

1. Engage an installer who employs workers for this Project who are trained or certified by floor tile manufacturer for installation techniques required.

1.8 DELIVERY, STORAGE, AND HANDLING

A. Store floor tile and installation materials in dry spaces protected from the weather, with ambient temperatures maintained within range recommended by manufacturer, but not less than 50 deg F (10 deg C) or more than 90 deg F (32 deg C). Store floor tiles on flat surfaces.

1.9 FIELD CONDITIONS

A. Maintain ambient temperatures within range recommended by manufacturer, but not less than 70 deg F (21 deg C) or more than 95 deg F (35 deg C), in spaces to receive floor tile during the following time periods:

1. 48 hours before installation.
2. During installation.
3. 48 hours after installation.

B. After installation and until Substantial Completion, maintain ambient temperatures within range recommended by manufacturer, but not less than 55 deg F (13 deg C) or more than 95 deg F (35 deg C).

C. Close spaces to traffic during floor tile installation.

D. Close spaces to traffic for 48 hours after floor tile installation.

E. Install floor tile after other finishing operations, including painting, have been completed.

PART 2 - PRODUCTS

2.1 PERFORMANCE REQUIREMENTS

A. Fire-Test-Response Characteristics: For resilient tile flooring, as determined by testing identical products according to ASTM E 648 or NFPA 253 by a qualified testing agency.

1. Critical Radiant Flux Classification: Class I, not less than 0.45 W/sq. cm.

2.2 VINYL COMPOSITION FLOOR TILE **(VCT)**

A. Products: Subject to compliance with requirements, provide one of the following:

1. Azrock Commercial Flooring.
2. Basis-of-Design: Armstrong World Industries, Inc.
3. Congoleum Corporation.
4. Mannington Mills, Inc.

B. Tile Standard: ASTM F 1066, Class 2, through-pattern tile.

C. Wearing Surface: Smooth.

D. Thickness: 0.125 inch (3.2 mm).

E. Size: 12 by 12 inches (305 by 305 mm).

F. Colors and Patterns: Three colors, to match existing VCT at middle school.

2.3 INSTALLATION MATERIALS

A. Trowelable Leveling and Patching Compounds: Latex-modified, portland cement based or blended hydraulic-cement-based formulation provided or approved by floor tile manufacturer for applications indicated.

B. Adhesives: Water-resistant type recommended by floor tile and adhesive manufacturers to suit floor tile and substrate conditions indicated.

1. Adhesives shall comply with the following limits for VOC content:

a. Vinyl Composition Tile Adhesives: 50 g/L or less.

2. Adhesives shall comply with the testing and product requirements of the California Department of Public Health's "Standard Method for the Testing and Evaluation of Volatile Organic Chemical Emissions from Indoor Sources Using Environmental Chambers."

C. Floor Polish: Provide protective, liquid floor-polish products recommended by floor tile manufacturer.

PART 3 - EXECUTION

3.1 EXAMINATION

A. Examine substrates, with Installer present, for compliance with requirements for maximum moisture content and other conditions affecting performance of the Work.

1. Verify that finishes of substrates comply with tolerances and other requirements specified in other Sections and that substrates are free of cracks, ridges, depressions, scale, and foreign deposits that might interfere with adhesion of floor tile.

B. Proceed with installation only after unsatisfactory conditions have been corrected.

3.2 PREPARATION

A. Prepare substrates according to floor tile manufacturer's written instructions to ensure adhesion of resilient products.

B. Concrete Substrates: Prepare according to ASTM F 710.

1. Verify that substrates are dry and free of curing compounds, sealers, and hardeners.
2. Remove substrate coatings and other substances that are incompatible with adhesives and that contain soap, wax, oil, or silicone, using mechanical methods recommended by floor tile manufacturer. Do not use solvents.
3. Alkalinity and Adhesion Testing: Perform tests recommended by floor tile manufacturer. Proceed with installation only after substrate alkalinity falls within range on pH scale recommended by manufacturer in writing, but not less than 5 or more than 9 pH.
4. Moisture Testing: Proceed with installation only after substrates pass testing according to floor tile manufacturer's written recommendations, but not less stringent than the following:

a. Perform anhydrous calcium chloride test according to ASTM F 1869. Proceed with installation only after substrates have maximum moisture-vapor-emission rate of 3 lb of water/1000 sq. ft. (1.36 kg of water/92.9 sq. m) in 24 hours.
b. Perform relative humidity test using in situ probes according to ASTM F 2170. Proceed with installation only after substrates have a maximum 75 percent relative humidity level.

C. Fill cracks, holes, and depressions in substrates with trowelable leveling and patching compound; remove bumps and ridges to produce a uniform and smooth substrate.

D. Do not install floor tiles until they are the same temperature as the space where they are to be installed.

1. At least 48 hours in advance of installation, move resilient floor tile and installation materials into spaces where they will be installed.

E. Immediately before installation, sweep and vacuum clean substrates to be covered by resilient floor tile.

3.3 FLOOR TILE INSTALLATION

A. Comply with manufacturer's written instructions for installing floor tile.

B. Lay out floor tiles from center marks established with principal walls, discounting minor offsets, so tiles at opposite edges of room are of equal width. Adjust as necessary to avoid using cut widths that equal less than one-half tile at perimeter.

1. Lay tiles square with room axis.

C. Match floor tiles for color and pattern by selecting tiles from cartons in the same sequence as manufactured and packaged, if so numbered. Discard broken, cracked, chipped, or deformed tiles.

1. Lay tiles with grain direction alternating in adjacent tiles (basket-weave pattern).

D. Scribe, cut, and fit floor tiles to butt neatly and tightly to vertical surfaces and permanent fixtures including built-in furniture, cabinets, pipes, outlets, and door frames.

E. Extend floor tiles into toe spaces, door reveals, closets, and similar openings. Extend floor tiles to center of door openings.

F. Maintain reference markers, holes, and openings that are in place or marked for future cutting by repeating on floor tiles as marked on substrates. Use chalk or other nonpermanent marking device.

G. Install floor tiles on covers for telephone and electrical ducts, building expansion-joint covers, and similar items in finished floor areas. Maintain overall continuity of color and pattern between pieces of tile installed on covers and adjoining tiles. Tightly adhere tile edges to substrates that abut covers and to cover perimeters.

H. Adhere floor tiles to flooring substrates using a full spread of adhesive applied to substrate to produce a completed installation without open cracks, voids, raising and puckering at joints, telegraphing of adhesive spreader marks, and other surface imperfections.

3.4 CLEANING AND PROTECTION

A. Comply with manufacturer's written instructions for cleaning and protecting floor tile.

B. Perform the following operations immediately after completing floor tile installation:

1. Remove adhesive and other blemishes from exposed surfaces.
2. Sweep and vacuum surfaces thoroughly.
3. Damp-mop surfaces to remove marks and soil.

C. Protect floor tile from mars, marks, indentations, and other damage from construction operations and placement of equipment and fixtures during remainder of construction period.

D. Floor Polish: Remove soil, adhesive, and blemishes from floor tile surfaces before applying liquid floor polish.

1. Apply one coat.

E. Cover floor tile until Substantial Completion.

END OF SECTION 096519

SECTION 096723 - RESINOUS FLOORING

PART I - GENERAL

1.1 RELATED DOCUMENTS

A. Drawings and general provisions of Contract, including General and Supplementary Conditions and Division 1 Specification Sections, apply to this Section.

1.2 SUMMARY

A. Definitions: Resinous flooring includes a three component mortar consisting of pigmented urethane resin, curing agent, and rubber aggregates, sealed with a two-component, 100% aliphatic urethane grout coat and a two-component, water-based, flat, aliphatic polyurethane topcoat.

1.3 SUBMITTALS

A. Product Data: Submit manufacturer's technical data, installation instructions, and general recommendations for each resinous flooring material required. Include certification indicating compliance of materials with requirements.

B. Samples for initial selection for each type of exposed finish required.

1. For initial selection of colors and finishes, submit manufacturer's color charts showing full range of colors and finishes available.

C. Samples for Verification: 6-inch square samples of each type of resinous flooring required, applied to a rigid backing, in color and finish indicated, by Installer for this Project.

D. Installer Certificates: Signed by manufacturer certifying that installer complies with specified requirements and is authorized installer of their product.

E. Material Certificates and Material Test Reports.

F. Maintenance Data for Resinous flooring to include in maintenance manuals.

1.4 QUALITY ASSURANCE

A. Single Source Responsibility: Obtain primary resinous flooring materials including primers, resins, hardening agents, finish or sealing coats from a single manufacturer with not less than ten years of successful experience in manufacturing and installing principal materials described in this section. Contractor shall have completed at least ten projects of similar size and complexity. Provide secondary materials only of type and from source recommended by manufacturer of primary materials.

B. Pre-Installation Conference

1. Construction Manager shall arrange a meeting not less than thirty days prior to starting work.
2. Attendance:
   a. Contractor
   b. Owner's Representative
   c. Manufacturer Representative

C. ISO 9002: All materials, including resins, curing agents, finish coats and sealants are manufactured and tested under an ISO 9002 registered quality system.

1.5 DELIVERY, STORAGE AND HANDLING

A. Material shall be delivered to job site and checked by flooring contractor for completeness and shipping damage prior to job start.

B. All materials used shall be factory pre-weighed and pre-packaged in single, easy to manage batches to eliminate on site mixing errors. No on site weighing or volumetric measurements allowed.

C. Material shall be stored in a dry, enclosed area protected from exposure to moisture. Temperature of storage area shall be maintained between 60 and 85ºF/16 and 30ºC.

1.6 PROJECT CONDITIONS

A. Concrete substrate shall be properly cured for a minimum of 30 days. A vapor barrier must be present for concrete sub-floors on or below grade. Otherwise, an osmotic pressure resistant grout must be installed prior to the resinous flooring.

B. Utilities, including electric, heat (air temperature between 60 and 85ºF/16 and 30ºC) and finished lighting to be supplied by General Contractor.

C. Job area to be free of other trades during, and for a period of 48 hours, after floor installation.

D. Protection of finished floor from damage by subsequent trades shall be the responsibility of the General Contractor.

1.7 WARRANTY

A. Manufacturer shall furnish a single, written warranty covering both material and workmanship for a period of one (1) full year from date of installation.

PART II - PRODUCTS

2.1 COLORS

A. Colors: Standard or custom blend, as selected by Architect from manufacturer's standard chip and matrix colors.

1. One selection each for EPX-1 and EPX-2.

2.3 URETHANE FLOORING (**EPX-1, KITCHEN**)

A. Basis of Design Product**: Stonhard, Inc.: Stonclad UR**, subject to compliance with requirements and approved by the Architect, products that may be incorporated into the work are as follows:

1. Dur-A-Flex, Inc.
2. Key Resin Company.
3. Polymerica Incorporated.

B. System Characteristics:

1 Color and Pattern: As selected by Architect from manufacturer's full range.
2 Wearing Surface: Texture for slip resistance.
3. Overall System Thickness: 1/4 inch (6.4 mm).
4. Federal Agency Approvals: USDA and FDA approved for food-processing environments.

C. System Components: Manufacturer's standard components that are compatible with each other and as follows:

1. Body Coat(s):

a. Resin: Urethane.
b. Formulation Description: 100 percent solids
c. Application Method: Troweled.

1) Thickness of Coats: 1/4 inch (6.4 mm).
2) Number of Coats: One.

d. Aggregates: Manufacturer's standard.

2. Topcoat: Chemical-resistant and UV-resistant sealing or finish coat(s).

a. Resin: Urethane
b. Formulation Description: 100 percent solids
c. Type: Clear,
d. Finish: Gloss.
e. Number of Coats: One

2.4 SYSTEM CHARACTERISTICS

A. Integral Cove Base: 4 inches high.

2.5 ACCESSORY MATERIALS

A. Patching and Fill Materials: Resinous product by resinous flooring manufacturer and recommended by manufacturer for field conditions encountered.

2.6 JOINT SEALANT MATERIALS

A. Produced by manufacturer of resinous flooring system for type of service and joint condition indicated.

PART III EXECUTION

3.1 PREPARATION

A. Substrate: Concrete preparation shall be by mechanical means and include use of a scabbler, scarifier or shot blast machine for removal of bond inhibiting materials such as curing compounds or laitance.

3.2 APPLICATION

A. General: Apply each component of resinous flooring system in compliance with manufacturer's directions to produce a uniform monolithic wearing surface of thickness indicated, uninterrupted except at divider strips, sawn joints or other types of joints (if any), indicated or required.

B. Free-Flowing Mortar: Mix mortar material according to manufacturer's recommended procedures. Uniformly spread mortar over substrate using manufacturer's specially designed screed rake adjusted to manufacturer's recommended height. Spike roll the mortar to remove any rake lines, using manufacturer’s specially designed spike roller.

C. Sanding: Sand surface of the cured mortar according to manufacturer’s recommended equipment and procedures. Thoroughly clean and vacuum the surface of the base once all sanding has been completed.

D. Groutcoat: Mix and apply sealer with strict adherence to manufacturer's installation procedures and coverage rates.

E. Topcoat: Mix and roller apply the topcoat with strict adherence to manufacturer's installation procedures and coverage rates.

3.3 FIELD QUALITY CONTROL

A. The right is reserved to invoke material testing procedures at any time, and any number of times during period of flooring application.

B. The Owner may engage service of an independent testing laboratory to sample materials being used on the job site. Samples of material will be taken, identified and sealed, and certified in presence of Contractor.

C. Testing laboratory may perform tests for any of characteristics specified, using applicable testing procedures referenced herein, or if none referenced, in manufacturer's product data.

D. If test results show materials being used do not comply with specified requirements, Contractor may be directed by Owner to stop work; remove non-complying materials; pay for testing; reapply flooring materials to properly prepared surfaces which had previously been coated with unacceptable materials.

3.4 CURING, PROTECTION AND CLEANING

A. Cure resinous flooring materials in compliance with manufacturer's directions, taking care to prevent contamination during stages of application and prior to completion of curing process. Close area of application for a minimum of 48 hours.

B. Protect resinous flooring materials from damage and wear during construction operation. Where temporary covering is required for this purpose, comply with manufacturer's recommendations for protective materials and method of application. General Contractor is responsible for protection and cleaning of surfaces after final coats.

C. Cleaning: Remove temporary covering and clean resinous flooring just prior to final inspection. Use cleaning materials and procedures recommended by resinous flooring manufacturer.

END OF SECTION 096723

SECTION 099113 - EXTERIOR PAINTING

PART 1 - GENERAL

1.1 RELATED DOCUMENTS

A. Drawings and general provisions of the Contract, including General and Supplementary Conditions and Division 1 Specification Sections, apply to this Section.

1.2 SUMMARY

A. This Section includes surface preparation and the application of paint systems on the following exterior substrates:

1. Steel.
2. Galvanized metal.
3. PVC and Fiberglass Trim.

1.3 SUBMITTALS

A. Product Data: For each type of product indicated.

1. Include documentation of OTC Compliance.

B. Product List: For each product indicated, include the following:

1. Cross-reference to paint system and locations of application areas. Use same designations indicated on Drawings and in schedules.

1.4 QUALITY ASSURANCE

A. OTC (Ozone Transport Commission)

1. Products: Complying with OTC Regulations regarding lower VOC limits. All products must be identified and documented as OTC Compliant.

1.5 DELIVERY, STORAGE, AND HANDLING

A. Store materials not in use in tightly covered containers in well-ventilated areas with ambient temperatures continuously maintained at not less than 45 deg F.

1. Maintain containers in clean condition, free of foreign materials and residue.
2. Remove rags and waste from storage areas daily.

1.6 PROJECT CONDITIONS

A. Apply paints only when temperature of surfaces to be painted and ambient air temperatures are between 50 and 95 deg F.

B. Do not apply paints in snow, rain, fog, or mist; when relative humidity exceeds 85 percent; at temperatures less than 5 deg F above the dew point; or to damp or wet surfaces.

1.7 EXTRA MATERIALS

A. Furnish extra materials described below that are from same production run (batch mix) as materials applied and that are packaged for storage and identified with labels describing contents.

1. Quantity: Furnish an additional 5 percent, but not less than 1 gal. (3.8 L) of each material and color applied

PART 2 - PRODUCTS

2.1 MANUFACTURERS

A. Manufacturers: Subject to compliance with requirements, provide products by one of the following:

1. Benjamin Moore & Co.
2. Duron, Inc.
3. Sherwin-Williams Company.

2.2 PAINT, GENERAL

A. Material Compatibility:

1. Provide materials for use within each paint system that are compatible with one another and substrates indicated, under conditions of service and application as demonstrated by manufacturer, based on testing and field experience.

B. Colors: As selected by Architect from manufacturer's full range. Up to four (4) Exterior Color Selections.

2.3 PRIMERS

A. Primer System 1:

1. D.T.M. Acrylic Semi-Gloss #M29 by Benjamin Moore & Co.
2. Duron Dura Clad 65 Waterborne Wash Primer DU1Y00650 by Duron, Inc.
3. Pro-Cryl (B66-310 Series) by Sherwin-Williams Company.

B. Primer System 2:

1. Moorcraft Super Spec Latex Exterior Primer #169 by Benjamin Moore & Co.
2. Duron Dura Clad 63 Direct-To-Metal Acrylic Bonding Primer DU1A00630 by Duron, Inc.
3. S-W All Surface Enamel Latex Primer, A41W210 by Sherwin-Williams Company.

2.4 COATINGS

A. Coating System 1 (Semigloss):

1. D.T.M. Acrylic Semi-Gloss #M29 by Benjamin Moore & Co.
2. Duron Dura Clad Direct-To-Metal Acrylic Coating, 95-4XX Series by Duron, Inc.
3. Sher-Cryl (B66-300 Series) by Sherwin-Williams Company.

B. Coating System 2 (Semigloss):

1. D.T.M. Acrylic Semi-Gloss #M29 by Benjamin Moore & Co.
2. Weathershield Exterior 100% Acrylic Coating, 03 Series by Duron, Inc.
3. S-W Metalatex Semi-Gloss Coating, B42 Series by Sherwin-Williams Company.

PART 3 - EXECUTION

3.1 EXAMINATION

A. Examine substrates and conditions, with Applicator present, for compliance with requirements for maximum moisture content and other conditions affecting performance of work.

B. Verify suitability of substrates, including surface conditions and compatibility with existing finishes and primers.

C. Begin coating application only after unsatisfactory conditions have been corrected and surfaces are dry.

1. Beginning coating application constitutes Contractor's acceptance of substrates and conditions.

3.2 PREPARATION

A. Remove plates, machined surfaces, and similar items already in place that are not to be painted. If removal is impractical or impossible because of size or weight of item, provide surface-applied protection before surface preparation and painting.

1. After completing painting operations, use workers skilled in the trades involved to reinstall items that were removed. Remove surface-applied protection if any.
2. Do not paint over labels of independent testing agencies or equipment name, identification, performance rating, or nomenclature plates.

B. Clean substrates of substances that could impair bond of paints, including dirt, oil, grease, and incompatible paints and encapsulants.

1. Remove incompatible primers and reprime substrate with compatible primers as required to produce paint systems indicated.

C. Steel Substrates: Remove rust and loose mill scale. Clean using methods recommended in writing by paint manufacturer.

D. Galvanized-Metal Substrates: Remove grease and oil residue from galvanized sheet metal fabricated from coil stock by mechanical methods to produce clean, lightly etched surfaces that promote adhesion of subsequently applied paints.

E. PVC and Fiberglass Substrates: Clean thoroughly by scrubbing with a warm, soapy water solution. Rinse thoroughly.

3.3 APPLICATION

A. Apply paints according to manufacturer's written instructions.

1. Use applicators and techniques suited for paint and substrate indicated.
2. Paint surfaces behind movable items same as similar exposed surfaces. Before final installation, paint surfaces behind permanently fixed items with prime coat only.

B. Tint each undercoat a lighter shade to facilitate identification of each coat if multiple coats of same material are to be applied. Tint undercoats to match color of topcoat, but provide sufficient difference in shade of undercoats to distinguish each separate coat.

C. If undercoats or other conditions show through topcoat, apply additional coats until cured film has a uniform paint finish, color, and appearance.

D. Apply paints to produce surface films without cloudiness, spotting, holidays, laps, brush marks, roller tracking, runs, sags, ropiness, or other surface imperfections. Cut in sharp lines and color breaks.

3.4 FIELD QUALITY CONTROL

A. Testing of Paint Materials: Owner reserves the right to invoke the following procedure at any time and as often as Owner deems necessary during the period when paints are being applied:

1. Owner will engage the services of a qualified testing agency to sample paint materials being used. Samples of material delivered to Project site will be taken, identified, sealed, and certified in presence of Contractor.
2. Testing agency will perform tests for compliance of paint materials with product requirements.
3. Owner may direct Contractor to stop applying paints if test results show materials being used do not comply with product requirements. Contractor shall remove noncomplying-paint materials from Project site, pay for testing, and repaint surfaces painted with rejected materials. Contractor will be required to remove rejected materials from previously painted surfaces if, on repainting with complying materials, the two paints are incompatible.

3.5 CLEANING AND PROTECTION

A. At end of each workday, remove rubbish, empty cans, rags, and other discarded materials from Project site.

B. After completing paint application, clean spattered surfaces. Remove spattered paints by washing, scraping, or other methods. Do not scratch or damage adjacent finished surfaces.

C. Protect work of other trades against damage from paint application. Correct damage to work of other trades by cleaning, repairing, replacing, and refinishing, as approved by Architect, and leave in an undamaged condition.

D. At completion of construction activities of other trades, touch up and restore damaged or defaced painted surfaces.

3.6 EXTERIOR PAINTING SCHEDULE

A. Steel and Galvanized-Metal Substrates:

1. System 1:

a. Prime Coat: Primer System 1.
b. Intermediate Coat and Topcoat: System 1 Coating (semigloss).

B. PVC and Fiberglass Substrates (Manufacturer to verify compatibility with product provided):

1. System 2:

a. Prime Coat: Primer System 2
b. Intermediate Coat and Topcoat: System 2 Coating (semigloss).

END OF SECTION 099113

SECTION 099123 - INTERIOR PAINTING

PART 1 - GENERAL

1.1 RELATED DOCUMENTS

A. Drawings and general provisions of the Contract, including General and Supplementary Conditions and Division 1 Specification Sections, apply to this Section.

1.2 SUMMARY

A. This Section includes surface preparation and the application of paint systems on the following interior substrates:

1. Concrete masonry units (CMU).
2. Glazed CMU and Ceramic Tile (CT) Prepping for Paint
3. Steel.
4. Galvanized metal.
5. Gypsum board.
6. Wood.
7. Plaster.

1.3 SUBMITTALS

A. Product Data: For each type of product indicated.

1. Include documentation of OTC Compliance.

B. Product List: For each product indicated, include the following:

1. Cross-reference to paint system and locations of application areas. Use same designations indicated on Drawings and in schedules.

1.4 QUALITY ASSURANCE

A. OTC (Ozone Transport Commission)

1. Products: Complying with OTC Regulations regarding lower VOC limits. All products must be identified and documented as OTC Compliant.

1.5 DELIVERY, STORAGE, AND HANDLING

A. Store materials not in use in tightly covered containers in well-ventilated areas with ambient temperatures continuously maintained at not less than 45 deg F.

1. Maintain containers in clean condition, free of foreign materials and residue.
2. Remove rags and waste from storage areas daily.

1.6 PROJECT CONDITIONS

A. Apply paints only when temperature of surfaces to be painted and ambient air temperatures are between 50 and 95 deg F.

B. Do not apply paints when relative humidity exceeds 85 percent; at temperatures less than 5 deg F above the dew point; or to damp or wet surfaces.

1.7 EXTRA MATERIALS

A. Furnish extra materials described below that are from same production run (batch mix) as materials applied and that are packaged for storage and identified with labels describing contents.

1. Quantity: Furnish an additional 5 percent, but not less than 1 gal. (3.8 L) of each material and color applied.

PART 2 - PRODUCTS

2.1 MANUFACTURERS

A. Manufacturers: Subject to compliance with requirements, provide products by one of the following:

1. Benjamin Moore & Co.
2. Duron, Inc.
3. Sherwin-Williams Company.

2.2 PAINT, GENERAL

A. Material Compatibility:

1. Provide materials for use within each paint system that are compatible with one another and substrates indicated, under conditions of service and application as demonstrated by manufacturer, based on testing and field experience.
2. For each coat in a paint system, provide products recommended in writing by manufacturers of topcoat for use in paint system and on substrate indicated.

B. Colors: As selected by Architect from manufacturer's full range. Up to seventeen (17) Interior color selections. Refer to painting color schedule and corridors color keys in Drawings.

2.3 ETCHING CREAM

A. Brushable Etching Cream:

1. XIM Etch-I-M by XIM Products, Inc.

2.4 BLOCK FILLERS

A. Interior/Exterior Latex Block Filler:

1. Latex Block Filler #M88 by Benjamin Moore & Co.
2. Duron Block Kote Latex Block Filler 08-128 by Duron, Inc.
3. PrepRite Block Filler (B25W25) by Sherwin-Williams Company.

2.5 PRIMERS/SEALERS

A. Interior Latex Primer/Sealer #1:

1. Pristine Eco Spec Interior Latex Primer Sealer #231 by Benjamin Moore & Co.
2. Duron Interior Acrylic Latex Drywall Primer Sealer 04-124 by Duron, Inc.
3. Harmony Interior Latex Primer by Sherwin-Williams Company.

B. Interior Latex Primer/Sealer #2:

1. Fresh Start All Purpose 100% Acrylic Primer #023 by Benjamin Moore & Co.
2. Duron Interior Alkyd Stain Block Enamel Undercoater 04-024 by Duron, Inc.
3. PrepRite 200 Interior Latex Primer by Sherwin-Williams Company.

2.6 METAL PRIMERS

A. Metal Primer:

1. D.T.M. Acrylic Semi-Gloss #M29 by Benjamin Moore & Co.
2. Duron Dura Clad 65 Waterborne Wash Primer DUIY00650 by Duron, Inc.
3. Pro-Cryl (B66-310 Series) by Sherwin-Williams Company.

2.7 COATINGS

A. Coating #1 (Semigloss):

1. D.T.M. Acrylic Semi-Gloss #M29 by Benjamin Moore & Co.
2. Duron Dura Clad Direct-to-Metal Acrylic Coating, 95-4XX Series by Duron, Inc.
3. Sher-Cryl (B66-300 Series) by Sherwin-Williams Company.

B. Coating #2 (Eggshell):

1. Pristine Eco Spec Interior Latex Enamel #223 by Benjamin Moore & Co.
2. Duron Ultra Deluxe Interior Acrylic Latex Enamel, 36 Series by Duron, Inc.
3. Harmony Low Odor Interior Latex Finish by Sherwin-Williams Company.

C. Coating #3 (Semigloss):

1. Satin Impervo #C235 by Benjamin Moore & Co.
2. Duron Ultra Deluxe Interior Acrylic Latex Enamel, 35 Series by Duron, Inc.
3. Harmony Low Odor Interior Latex Finish by Sherwin-Williams Company.

PART 3 - EXECUTION

3.1 EXAMINATION

A. Examine substrates and conditions, with Applicator present, for compliance with requirements for maximum moisture content and other conditions affecting performance of work.

B. Maximum Moisture Content of Substrates: When measured with an electronic moisture meter as follows:

1. Concrete: 12 percent.
2. Masonry (Clay and CMU): 12 percent.
3. Wood: 15 percent.
4. Gypsum Board: 12 percent.
5. Plaster: 12 percent.

C. Verify suitability of substrates, including surface conditions and compatibility with existing finishes and primers.

D. Begin coating application only after unsatisfactory conditions have been corrected and surfaces are dry.

1. Beginning coating application constitutes Contractor's acceptance of substrates and conditions.

3.2 PREPARATION

A. Comply with manufacturer's written instructions and recommendations in "MPI Architectural Painting Specification Manual" applicable to substrates indicated.

B. Remove plates, machined surfaces, and similar items already in place that are not to be painted. If removal is impractical or impossible because of size or weight of item, provide surface-applied protection before surface preparation and painting.

1. After completing painting operations, use workers skilled in the trades involved to reinstall items that were removed. Remove surface-applied protection if any.
2. Do not paint over labels of independent testing agencies or equipment name, identification, performance rating, or nomenclature plates.

C. Clean substrates of substances that could impair bond of paints, including dirt, oil, grease, and incompatible paints and encapsulants.

1. Remove incompatible primers and reprime substrate with compatible primers as required to produce paint systems indicated.

D. Concrete Substrates: Remove release agents, curing compounds, efflorescence, and chalk. Do not paint surfaces if moisture content or alkalinity of surfaces to be painted exceeds that permitted in manufacturer's written instructions.

E. Clay Masonry Substrates: Remove efflorescence and chalk. Do not paint surfaces if moisture content of surfaces or alkalinity of mortar joints to be painted exceed that permitted in manufacturer's written instructions.

F. Concrete Masonry Substrates: Remove efflorescence and chalk. Do not paint surfaces if moisture content or alkalinity of surfaces to be painted exceeds that permitted in manufacturer's written instructions.

G. Steel Substrates: Remove rust and loose mill scale. Clean using methods recommended in writing by paint manufacturer.

H. Galvanized-Metal Substrates: Remove grease and oil residue from galvanized sheet metal fabricated from coil stock by mechanical methods to produce clean, lightly etched surfaces that promote adhesion of subsequently applied paints.

I. Aluminum Substrates: Remove surface oxidation.

J. Wood Substrates:

1. Scrape multiple layers of existing paint to ensure proper adhesion of new paint. Field verify existing surfaces to be painted to become familiar with the existing surfaces to be re-painted.
2. Scrape and clean knots, and apply coat of knot sealer before applying primer.
3. Sand surfaces that will be exposed to view, and dust off.
4. Prime edges, ends, faces, undersides, and backsides of wood.
5. After priming, fill holes and imperfections in the finish surfaces with putty or plastic wood filler. Sand smooth when dried.

K. Gypsum Board Substrates: Do not begin paint application until finishing compound is dry and sanded smooth.

L. Plaster Substrates: Do not begin paint application until plaster is fully cured and dry.

M. Cotton or Canvas Insulation Covering Substrates: Remove dust, dirt, and other foreign material that might impair bond of paints to substrates.

3.3 APPLICATION

A. Apply paints according to manufacturer's written instructions.

1. Use applicators and techniques suited for paint and substrate indicated.
2. Paint surfaces behind movable equipment and furniture same as similar exposed surfaces. Before final installation, paint surfaces behind permanently fixed equipment or furniture with prime coat only.
3. Paint front and backsides of access panels, removable or hinged covers, and similar hinged items to match exposed surfaces.

B. If undercoats or other conditions show through topcoat, apply additional coats until cured film has a uniform paint finish, color, and appearance.

C. Apply paints to produce surface films without cloudiness, spotting, holidays, laps, brush marks, roller tracking, runs, sags, ropiness, or other surface imperfections. Cut in sharp lines and color breaks.

D. Painting Mechanical and Electrical Work: Paint items exposed in equipment rooms and occupied spaces including, but not limited to, the following:

1. Mechanical Work:

a. Uninsulated metal piping.
b. Uninsulated plastic piping.
c. Pipe hangers and supports.
d. Tanks that do not have factory-applied final finishes.
e. Visible portions of internal surfaces of metal ducts, without liner, behind air inlets and outlets.
f. Duct, equipment, and pipe insulation having cotton or canvas insulation covering or other paintable jacket material.
g. Mechanical equipment that is indicated to have a factory-primed finish for field painting.

2. Electrical Work:

a. Switchgear.
b. Panelboards.
c. Electrical equipment that is indicated to have a factory-primed finish for field painting.

3.4 FIELD QUALITY CONTROL

A. Testing of Paint Materials: Owner reserves the right to invoke the following procedure at any time and as often as Owner deems necessary during the period when paints are being applied:

1. Owner will engage the services of a qualified testing agency to sample paint materials being used. Samples of material delivered to Project site will be taken, identified, sealed, and certified in presence of Contractor.
2. Testing agency will perform tests for compliance with product requirements.
3. Owner may direct Contractor to stop applying paints if test results show materials being used do not comply with product requirements. Contractor shall remove noncomplying-paint materials from Project site, pay for testing, and repaint surfaces painted with rejected materials. Contractor will be required to remove rejected materials from previously painted surfaces if, on repainting with complying materials, the two paints are incompatible.

3.5 CLEANING AND PROTECTION

A. At end of each workday, remove rubbish, empty cans, rags, and other discarded materials from Project site.

B. After completing paint application, clean spattered surfaces. Remove spattered paints by washing, scraping, or other methods. Do not scratch or damage adjacent finished surfaces.

C. Protect work of other trades against damage from paint application. Correct damage to work of other trades by cleaning, repairing, replacing, and refinishing, as approved by Architect, and leave in an undamaged condition.

D. At completion of construction activities of other trades, touch up and restore damaged or defaced painted surfaces.

3.6 INTERIOR PAINTING SCHEDULE

A. CMU Substrates:

1. Institutional Low-Odor/VOC Latex System:

a. Prime Coat: Interior/exterior latex block filler.
b. Intermediate Coat: Coating #3 matching topcoat.
c. Topcoat: Coating #3 (semigloss).

B. Steel and Galvanized-Metal Substrates:

1. System:

a. Prime Coat: Metal Primer.
b. Intermediate Coat: Coating #1.
c. Topcoat: Coating #1 (semigloss).

C. Gypsum Board Substrates:

1. Institutional Low-Odor/VOC Latex System:

a. Prime Coat: Interior latex primer/sealer #1.
b. Intermediate Coat: Coating #2 matching topcoat.
c. Topcoat: Coating #2 (eggshell).

D. Wood Substrates:

1. Institutional Low-Odor/VOC Latex System:

a. Prime Coat: Interior latex primer/sealer #2.
b. Intermediate Coat: Coating #2 matching topcoat.
c. Topcoat: Coating #2 (eggshell).

E. Plaster Substrates:

1. Institutional Low-Odor/VOC Latex System:

a. Prime Coat: Interior latex primer/sealer #1.
b. Intermediate Coat: Coating #2 matching topcoat.
c. Topcoat: Coating #2 (eggshell).

F. Glazed CMU and Ceramic Tile (CT)

1. Prepping for Paint, Contractors Option:

a. Manual or Machine Sanding.
b. Etching Cream.

END OF SECTION 099123

SECTION 099600 - HIGH-PERFORMANCE COATINGS

PART 1 - GENERAL

1.1 RELATED DOCUMENTS

A. Drawings and general provisions of the Contract, including General and Supplementary Conditions and Division 1 Specification Sections, apply to this Section.

1.2 SUMMARY

A. This Section includes surface preparation and application of high-performance coating systems on the following substrates:

1. Interior Substrates:

a. Clay masonry.
b. Concrete masonry units (CMU).
c. Glazed Concrete masonry units and Ceramic Tile (CT).
d. Gypsum board.

1.3 SUBMITTALS

A. Product Data: For each type of product indicated.

1. Include documentation of OTC Compliance.

B. Product List: For each product indicated. Cross-reference products to coating system and locations of application areas. Use same designations indicated on Drawings and in schedules.

1.4 QUALITY ASSURANCE

A. OTC (Ozone Transport Commission)

1. Products: Complying with OTC Regulations regarding lower VOC limits. All products must be identified and documented as OTC Compliant

1.5 DELIVERY, STORAGE, AND HANDLING

A. Store materials not in use in tightly covered containers in well-ventilated areas with ambient temperatures continuously maintained at not less than 45 deg F.

1. Maintain containers in clean condition, free of foreign materials and residue.
2. Remove rags and waste from storage areas daily.

1.6 PROJECT CONDITIONS

A. Apply coatings only when temperature of surfaces to be coated and surrounding air temperatures are between 50 and 95 deg F.

B. Do not apply coatings in snow, rain, fog, or mist; when relative humidity exceeds 85 percent; at temperatures less than 5 deg F above the dew point; or to damp or wet surfaces.

PART 2 - PRODUCTS

2.1 HIGH-PERFORMANCE COATINGS, GENERAL

A. Material Compatibility:

1. Provide materials for use within each coating system that are compatible with one another and substrates indicated, under conditions of service and application as demonstrated by manufacturer, based on testing and field experience.
2. Provide products of same manufacturer for each coat in a coating system.

B. Colors: As selected by Architect from manufacturer's full range. Up to three (3) Epoxy color selections.

2.2 BLOCK FILLERS

A. Interior/Exterior Latex Block Filler:

1. Products: Subject to compliance with requirements, provide one of the following:

a. Benjamin Moore & Co.; Moorcraft, Super Craft Latex Block Filler, 285-01.
b. ICI Paints; Devoe Coatings, Bloxfil Acrylic Block Filler, 4000.
c. PPG Architectural Finishes, Inc.; Interior/Exterior Latex Block Filler, 6-12.
d. Sherwin-Williams Company (The); PrepRite, Int/Ext Block Filler, B25W25.
e. Duron: Duron Dura Clad 700 Heavy Duty Cementitious Waterborne Block Filler, DU1W07000.

2.3 EPOXY COATINGS **(EP)**

A. Epoxy, Cold-Cured, Gloss:

1. Products: Subject to compliance with requirements, provide one of the following:

a. Benjamin Moore & Co.; Polyamide Epoxy Coating, M36/M37.
b. ICI Paints; Devoe/Fuller, Guardcote, DP34UXX.
c. PPG Architectural Finishes, Inc.; Aquapon, Epoxy Cold Cured Gloss, 95-1.
d. Duron: Dura Pre-Catalized Acrylic Epoxy, Gloss 901-00XX Series.
e. Sherwin-Williams Company (The); S-W Sher-Tile HS Epoxy, B67-200 Series.

B. Water-Based Epoxy (Interior and Exterior):

1. Products: Subject to compliance with requirements, provide one of the following:

a. Benjamin Moore & Co.; Acrylic Epoxy Gloss "A", Hardener "B", M43/M44.
b. ICI Paints; Devoe Coatings, Tru Glaze WB Epoxy Coating, 4418.
c. PPG Architectural Finishes, Inc.; Aquapon, Waterborne Epoxy, 98-1/98-98.
d. Sherwin-Williams Company (The); Industrial & Marine, Water Based Catalyzed Epoxy, B70W Series.
e. Duron: Dura Clad 800 High Build Epoxy, Gloss, DU1X08000 Series.

PART 3 - EXECUTION

3.1 EXAMINATION

A. Examine substrates and conditions, with Applicator present, for compliance with requirements for maximum moisture content and other conditions affecting performance of work.

1. Maximum Moisture Content of Substrates: When measured with an electronic moisture meter as follows:

   a. Masonry (Clay and CMU): 12 percent.

2. Verify compatibility with and suitability of substrates, including compatibility with existing finishes or primers.
3. Begin coating application only after unsatisfactory conditions have been corrected and surfaces are dry.
4. Coating application indicates acceptance of surfaces and conditions.

3.2 PREPARATION

A. Comply with manufacturer's written instructions applicable to substrates indicated.

B. Remove plates, machined surfaces, and similar items already in place that are not to be coated. If removal is impractical or impossible because of size or weight of item, provide surface-applied protection before surface preparation and coating.

   1. After completing coating operations, reinstall items that were removed; use workers skilled in the trades involved.

C. Clean substrates of substances that could impair bond of coatings, including dirt, oil, grease, and incompatible paints and encapsulants.

   1. Remove incompatible primers and reprime substrate with compatible primers as required to produce coating systems indicated.

D. Clay Masonry Substrates: Remove efflorescence and chalk. Do not coat surfaces if moisture content or alkalinity of surfaces to be coated exceeds that permitted in manufacturer's written instructions.

   1. Clean surfaces with pressurized water. Use pressure range of 100 to 600 psi at 6 to 12 inches.

E. CMU Substrates: Remove efflorescence and chalk. Do not coat surfaces if moisture content or alkalinity of surfaces to be coated exceeds that permitted in manufacturer's written instructions.

3.3 APPLICATION

A. Apply high-performance coatings according to manufacturer's written instructions.

   1. Use applicators and techniques suited for coating and substrate indicated.
   2. Coat surfaces behind movable equipment and furniture same as similar exposed surfaces. Before final installation, coat surfaces behind permanently fixed equipment or furniture with prime coat only.
   3. Coat back sides of access panels, removable or hinged covers, and similar hinged items to match exposed surfaces.

B. If undercoats or other conditions show through final coat, apply additional coats until cured film has a uniform coating finish, color, and appearance.

C. Apply coatings to produce surface films without cloudiness, spotting, holidays, laps, brush marks, runs, sags, ropiness, or other surface imperfections. Produce sharp glass lines and color breaks.

3.4 CLEANING AND PROTECTION

A. At end of each workday, remove rubbish, empty cans, rags, and other discarded materials from Project site.

B. After completing coating application, clean spattered surfaces. Remove spattered coatings by washing, scraping, or other methods. Do not scratch or damage adjacent finished surfaces.

C. Protect work of other trades against damage from coating operation. Correct damage by cleaning, repairing, replacing, and recoating, as approved by Architect, and leave in an undamaged condition.

D. At completion of construction activities of other trades, touch up and restore damaged or defaced coated surfaces.

3.5 INTERIOR HIGH-PERFORMANCE COATING SCHEDULE

A. Clay-Masonry Substrates:

1. Epoxy Coating System:

a. Prime Coat: Epoxy, cold-cured, gloss.
b. Intermediate Coat: Epoxy, cold-cured, gloss.
c. Topcoat: Epoxy, cold-cured, gloss.

B. CMU / Glazed CMU/CT Substrates:

1. Water-Based Epoxy Coating System:

a. Prime Coat: Interior/exterior latex block filler.
b. Intermediate Coat: Water-based epoxy (interior and exterior).
c. Topcoat: Water-based epoxy (interior and exterior).

END OF SECTION 099600

SECTION 101100 - VISUAL DISPLAY UNITS

PART 1 - GENERAL

1.1 RELATED DOCUMENTS

A. Drawings and general provisions of the Contract, including General and Supplementary Conditions and Division 01 Specification Sections, apply to this Section.

1.2 SUMMARY

A. Section Includes:

1. Markerboards.
2. Tackboards.
3. Visual display rails.

1.3 DEFINITIONS

A. Tackboard: Framed or unframed, tackable, visual display board assembly.

B. Visual Display Surface: Surfaces that are used to convey information visually, including surfaces of chalkboards, markerboards, tackboards, and surfacing materials that are not fabricated into composite panel form but are applied directly to walls.

1.4 ACTION SUBMITTALS

A. Product Data: For each type of product indicated. Include construction details, material descriptions, dimensions of individual components and profiles, and finishes for visual display surfaces.

B. Shop Drawings: For visual display surfaces. Include plans, elevations, sections, details, and attachments to other work.

1. Show locations of panel joints.
2. Show locations of special-purpose graphics for visual display surfaces.
3. Include sections of typical trim members.

C. Samples for Initial Selection: For each type of visual display surface indicated, for units with factory-applied color finishes, and as follows:

1. Actual sections of porcelain-enamel face sheet and tackboard assembly.
2. Fabric swatches of vinyl-fabric-faced tack assemblies.
3. Include accessory Samples to verify color selected.

D. Samples for Verification: For each type of visual display surface indicated.

1. Visual Display Surface: Not less than 8-1/2 by 11 inches (215 by 280 mm), mounted on substrate indicated for final Work. Include one panel for each type, color, and texture required.
2. Trim: 6-inch- (152-mm-) long sections of each trim profile.

3. Display Rail: 6-inch- (152-mm-) long sections.
4. Accessories: Full-size Sample of each type of accessory.

E. Product Schedule: For visual display surfaces. Use same designations indicated on Drawings.

1.5 INFORMATIONAL SUBMITTALS

A. Product Test Reports: Based on evaluation of comprehensive tests performed by a qualified testing agency, for surface-burning characteristics of fabrics.

B. Warranties: Sample of special warranties.

1.6 CLOSEOUT SUBMITTALS

A. Operation and Maintenance Data: For visual display surfaces and power-operated units to include in maintenance manuals.

1.7 QUALITY ASSURANCE

A. Installer Qualifications: Manufacturer's authorized representative who is trained and approved for installation of motor-operated, sliding visual display units required for this Project.

B. Source Limitations: Obtain visual display surfaces from single source from single manufacturer.

C. Surface-Burning Characteristics: As determined by testing identical products according to ASTM E 84 by a qualified testing agency. Identify products with appropriate markings of applicable testing agency.

1. Flame-Spread Index: 25 or less.
2. Smoke-Developed Index: 450 or less.

1.8 DELIVERY, STORAGE, AND HANDLING

A. Deliver factory-built visual display surfaces, including factory-applied trim where indicated, completely assembled in one piece without joints, where possible. If dimensions exceed maximum manufactured panel size, provide two or more pieces of equal length as acceptable to Architect. When overall dimensions require delivery in separate units, prefit components at the factory, disassemble for delivery, and make final joints at the site.

B. Store visual display surfaces vertically with packing materials between each unit.

1.9 PROJECT CONDITIONS

A. Environmental Limitations: Do not deliver or install visual display surfaces until spaces are enclosed and weathertight, wet work in spaces is complete and dry, work above ceilings is complete, and temporary HVAC system is operating and maintaining ambient temperature and humidity conditions at occupancy levels during the remainder of the construction period.

B. Field Measurements: Verify actual dimensions of construction contiguous with visual display surfaces by field measurements before fabrication.

1. Allow for trimming and fitting where taking field measurements before fabrication might delay the Work.

1.10 WARRANTY

A. Special Warranty for Porcelain-Enamel Face Sheets: Manufacturer's standard form in which manufacturer agrees to repair or replace porcelain-enamel face sheets that fail in materials or workmanship within specified warranty period.

1. Failures include, but are not limited to, the following:

a. Surfaces lose original writing and erasing qualities.
b. Surfaces exhibit crazing, cracking, or flaking.

2. Warranty Period: 50 years from date of Substantial Completion.

PART 2 - PRODUCTS

2.1 MATERIALS, GENERAL

A. Porcelain-Enamel Face Sheet: Manufacturer's standard steel sheet with porcelain-enamel coating fused to steel; uncoated thickness indicated.

1. Manufacturers: Subject to compliance with requirements, provide products by one of the following:

a. Claridge Products and Equipment, Inc.; LCS-II Markerboard
b. PolyVision Corporation; a Steelcase company; P^3 ceramicsteel Markerboard.

2. Gloss Finish: Gloss as indicated; dry-erase markers wipe clean with dry cloth or standard eraser.

B. Natural Cork Sheet: Seamless, single-layer, compressed fine-grain cork sheet; bulletin board quality; face sanded for natural finish with surface-burning characteristics indicated.

C. Plastic-Impregnated Cork Sheet: Seamless, homogeneous, self-sealing sheet consisting of granulated cork, linseed oil, resin binders, and dry pigments that are mixed and calendared onto fabric backing; with washable vinyl finish and integral color throughout with surface-burning characteristics indicated.

D. Vinyl Fabric: Mildew resistant, washable, complying with FS CCC-W-408D, Type II, burlap weave; weighing not less than 13 oz./sq. yd. (440 g/sq. m); with surface-burning characteristics indicated.

E. Hardboard: ANSI A135.4, tempered.

F. Particleboard: ANSI A208.1, Grade M-1, made with binder containing no urea formaldehyde.

G. Fiberboard: ASTM C 208.

H. Extruded Aluminum: ASTM B 221 (ASTM B 221M), Alloy 6063.

2.2 MARKERBOARD ASSEMBLIES

A. Porcelain-Enamel Markerboards: Balanced, high-pressure, factory-laminated markerboard assembly of three-ply construction consisting of backing sheet, core material, and 0.021-inch- (0.53-mm-) thick, porcelain-enamel face sheet with high-gloss finish.

1. Manufacturers: Subject to compliance with requirements, provide products by one of the following:

   a. AARCO Products, Inc.
   b. ADP Lemco, Inc.
   c. Bangor Cork Company, Inc.
   d. Best-Rite Manufacturing.
   e. Basis of Design: Claridge Products and Equipment, Inc.
   f. Egan Visual Inc.
   g. Ghent Manufacturing, Inc.
   h. Marsh Industries, Inc.; Visual Products Group.
   i. Platinum Visual Systems; a division of ABC School Equipment, Inc.
   j. PolyVision Corporation; a Steelcase company.

2. Particleboard Core: 3/8 inch (9.5 mm) thick; with 0.015-inch- (0.38-mm-) thick, aluminum sheet backing.
3. Laminating Adhesive: Manufacturer's standard, moisture-resistant thermoplastic type.

2.3 TACKBOARD ASSEMBLIES

A. Manufacturers: Subject to compliance with requirements, provide products by one of the following:

1. AARCO Products, Inc.
2. ADP Lemco, Inc.
3. Bangor Cork Company, Inc.
4. Best-Rite Manufacturing.
5. Basis of Design: Claridge Products and Equipment, Inc.
6. Egan Visual Inc.
7. Ghent Manufacturing, Inc.
8. Marsh Industries, Inc.; Visual Products Group.
9. Platinum Visual Systems; a division of ABC School Equipment, Inc.
10. PolyVision Corporation; a Steelcase company.

B. Vinyl-Fabric-Faced Tackboard: 1/4-inch- (6-mm-) thick, vinyl-fabric-faced cork sheet factory laminated to 1/4-inch- (6-mm-) thick hardboard backing.

2.4 VISUAL DISPLAY RAILS

A. Manufacturers: Subject to compliance with requirements, provide products by one of the following:

1. AARCO Products, Inc.
2. Bangor Cork Company, Inc.
3. Best-Rite Manufacturing.
4. Claridge Products and Equipment, Inc.
5. Ghent Manufacturing, Inc.
6. Marsh Industries, Inc.; Visual Products Group.
7. Platinum Visual Systems; a division of ABC School Equipment, Inc.

8. PolyVision Corporation; a Steelcase company.

B. General: Manufacturer's standard, aluminum-framed, tackable cork visual display surface fabricated into narrow rail shape and designed for displaying material.

2.5 MARKERBOARD AND TACKBOARD ACCESSORIES

A. Aluminum Frames and Trim: Fabricated from not less than 0.062-inch- (1.57-mm-) thick, extruded aluminum; standard size and shape.

1. Factory-Applied Trim: Manufacturer's standard.

B. Chalktray: Manufacturer's standard, continuous.

1. Box Type: Extruded aluminum with slanted front, grooved tray, and cast-aluminum end closures.

C. Map Rail: Provide the following accessories:

1. Display Rail: Continuous and integral with map rail; fabricated from cork approximately 1 to 2 inches (25 to 50 mm) wide.
2. End Stops: Located at each end of map rail.
3. Map Hooks and Clips: Two map hooks with flexible metal clips for every 48 inches (1219 mm) of map rail or fraction thereof.
4. Flag Holder: One for each room.
5. Paper Holder: Extruded aluminum; designed to hold paper by clamping action.

2.6 FABRICATION

A. Porcelain-Enamel Visual Display Assemblies: Laminate porcelain-enamel face sheet and backing sheet to core material under heat and pressure with manufacturer's standard flexible, waterproof adhesive.

B. Visual Display Boards: Factory assemble visual display boards unless otherwise indicated.

1. Where factory-applied trim is indicated, trim shall be assembled and attached to visual display boards at manufacturer's factory before shipment.

C. Aluminum Frames and Trim: Fabricate units straight and of single lengths, keeping joints to a minimum. Miter corners to a neat, hairline closure.

1. Where factory-applied trim is indicated, trim shall be assembled and attached to visual display units at manufacturer's factory before shipment.

2.7 GENERAL FINISH REQUIREMENTS

A. Comply with NAAMM's "Metal Finishes Manual for Architectural and Metal Products" for recommendations for applying and designating finishes.

B. Protect mechanical finishes on exposed surfaces from damage by applying a strippable, temporary protective covering before shipping.

C. Appearance of Finished Work: Noticeable variations in same piece are not acceptable. Variations in appearance of adjoining components are acceptable if they are within the range of approved Samples and are assembled or installed to minimize contrast.

2.8 ALUMINUM FINISHES

A. Clear Anodic Finish: AAMA 611, AA-M12C22A31, Class II, 0.010 mm or thicker.

PART 3 - EXECUTION

3.1 EXAMINATION

A. Examine substrates and conditions, with Installer present, for compliance with requirements for installation tolerances, surface conditions of wall, and other conditions affecting performance of the Work.

B. Examine walls and partitions for proper preparation and backing for visual display surfaces.

C. Examine walls and partitions for suitable framing depth where sliding visual display units will be installed.

D. Proceed with installation only after unsatisfactory conditions have been corrected.

3.2 PREPARATION

A. Comply with manufacturer's written instructions for surface preparation.

B. Clean substrates of substances that could impair the performance of and affect the smooth, finished surfaces of visual display boards, including dirt, mold, and mildew.

C. Prepare surfaces to achieve a smooth, dry, clean surface free of flaking, unsound coatings, cracks, defects, projections, depressions, and substances that will impair bond between visual display surfaces and wall surfaces.

3.3 INSTALLATION, GENERAL

A. General: Install visual display surfaces in locations and at mounting heights indicated on Drawings, or if not indicated, at heights indicated below. Keep perimeter lines straight, level, and plumb. Provide grounds, clips, backing materials, adhesives, brackets, anchors, trim, and accessories necessary for complete installation.

1. Mounting Height for Grades K through 3: 24 inches (610 mm) above finished floor to top of chalktray.
2. Mounting Height for Grades 4 through 6: 28 inches (711 mm) above finished floor to top of chalktray.
3. Mounting Height for Grades 7 and Higher: 36 inches (914 mm) above finished floor to top of chalktray.

3.4 INSTALLATION OF FACTORY-FABRICATED VISUAL DISPLAY BOARDS AND ASSEMBLIES

A. Visual Display Boards: Attach visual display boards to wall surfaces with egg-size adhesive gobs at 16 inches (400 mm) o.c., horizontally and vertically.

3.5 INSTALLATION OF VISUAL DISPLAY RAILS

A. Display Rails: Install rails in locations and at mounting heights indicated on Drawings, or if not indicated, at height indicated below. Attach to wall surface with fasteners at not more than 16 inches (400 mm) o.c.

1. Mounting Height: 60 inches (1524 mm) above finished floor to top of rail.

3.6 CLEANING AND PROTECTION

A. Clean visual display surfaces according to manufacturer's written instructions. Attach one cleaning label to visual display surface in each room.

B. Touch up factory-applied finishes to restore damaged or soiled areas.

C. Cover and protect visual display surfaces after installation and cleaning.

END OF SECTION 101100

SECTION 101400 - SIGNS

PART 1 - GENERAL

1.1 RELATED DOCUMENTS

A. Drawings and general provisions of the Contract, including General and Supplementary Conditions and Division 1 Specification Sections, apply to this Section.

1.2 SUMMARY

A. This Section includes the following:

1. Panel signs.
2. Dimensional characters (letters) for exterior use.
3. Signage accessories.

1.3 SUBMITTALS

A. Product Data: Include construction details, material descriptions, dimensions of individual components and profiles, and finishes for each type of sign.

B. Shop Drawings: Include plans, elevations, and large-scale sections of typical members and other components. Show mounting methods, grounds, mounting heights, layout, spacing, reinforcement, accessories, and installation details.

1. Provide message list for each sign, including large-scale details of wording, lettering, and braille layout.

C. Samples for Initial Selection: For each type of sign material indicated that involves color selection.

1. Provide full size samples of Panel Signs
2. Provide full size sample of typical Cast Letter.

1.4 QUALITY ASSURANCE

A. Installer Qualifications: An authorized representative of signage manufacturer for installation and maintenance of units required for this Project.

B. Source Limitations: Obtain each sign type through one source from a single manufacturer.

C. Regulatory Requirements: Comply with the Americans with Disabilities Act (ADA) and with code provisions as adopted by authorities having jurisdiction.

1. Interior Code Signage: Provide signage as required by accessibility regulations and requirements of authorities having jurisdiction. These include, but are not limited to, the following:

a. Illuminated Exit Signs: Refer to Division 26.
b. Fire Doors: IBC and NFPA 101 Requirements.
c. Room Capacity: IBC and NFPA 101 Requirements.
d. Elevator Signs: IBC and NFPA 101 Requirements.
e. Stairway Identification: IBC and NFPA 101 Requirements.

1.5 PROJECT CONDITIONS

A. Field Measurements: Where sizes of signs are determined by dimensions of surfaces on which they are installed, verify dimensions by field measurement before fabrication and indicate measurements on Shop Drawings.

1.6 COORDINATION

A. For signs supported by or anchored to permanent construction, advise installers of anchorage devices about specific requirements for placement of anchorage devices and similar items to be used for attaching signs.

1. For signs supported by or anchored to permanent construction, furnish templates for installation of anchorage devices.

PART 2 - PRODUCTS

2.1 MANUFACTURERS

A. In other Part 2 articles where titles below introduce lists, the following requirements apply for product selection:

1. Manufacturers: Subject to compliance with requirements, provide products by the manufacturers specified.

2.2 PANEL SIGNS

A. General: Provide panel signs that comply with requirements indicated for materials, thicknesses, finishes, colors, designs, shapes, sizes, and details of construction.

1. Produce smooth panel sign surfaces constructed to remain flat under installed conditions within tolerance of plus or minus 1/16 inch measured diagonally.

B. Manufacturers:

1. Andco Industries Corp.
2. Basis of Design: ASI - Modulex.: **EmBoss ADA-Ready Sign System**
3. Best Manufacturing Co.
4. Grimco, Inc.
5. Innerface Sign Systems, Inc.
6. Mills Manufacturing, Inc.
7. Mohawk Sign Systems.

C. Cast-Acrylic Sheet Mounting Panel: .125 inch thick clear and as follows:

1. Color: As selected by Architect from manufacturer's full range (up to two selections per sign for background and additional color for lettering).

D. Face: Vacuum formed 1.5mil, clear scratch resistant PVC/vinyl acetate bonded to acrylic mounting panel.

E. Unframed Panel Signs: Fabricate signs with edges mechanically and smoothly finished to comply with the following requirements:

1. Edge Condition: Square cut, eased.
2. Corner Condition: Rounded.

F. Graphic Content and Style: Provide sign copy that complies with requirements indicated on Drawings for size, style, spacing, content, mounting height and location, material, finishes, and colors of signage.

G. Tactile and Braille Copy: Manufacturer's standard vacuum formed embossing process for producing copy complying with ADA Accessibility Guidelines and ICC/ANSI A117.1. Text shall be accompanied by Grade 2 braille. Produce precisely formed characters with square cut edges free from burrs and cut marks.

1. Panel Material: Opaque acrylic sheet.
2. Raised-Copy Thickness: Not less than 1/32 inch.

H. Colored Coatings for Acrylic Sheet: For copy and background colors, provide Manufacturer’s standard range of solid colors.

2.3 DIMENSIONAL CHARACTERS

A. Manufacturers:

1. A.R.K. Ramos.
2. Basis of Design: ASI - Modulex.: **LC Series Cast Metal Letters**
3. Grimco, Inc.
4. Innerface Sign Systems, Inc.
5. Mills Manufacturing, Inc.
6. Mohawk Sign Systems.
7. Southwell Co. (The).

B. Aluminum Castings: Provide aluminum castings of alloy and temper recommended by sign manufacturer for casting process used and for type of use and finish indicated.

C. Cast Characters: Form individual letters and numbers by casting. Produce characters with smooth flat faces, sharp corners, and precisely formed lines and profiles, free from pits, scale, sand holes, and other defects. Cast lugs into back of characters and tap to receive threaded mounting studs. Comply with requirements indicated for finish, style, and size.

1. Material: Aluminum.
2. Finish: Architect’s choice of clear or Stain Annodized
3. Letterstyle & Height: See Drawings

2.4 PANEL SIGN TYPES

A. Room Signs:

1. Material: Cast-acrylic sheet.
2. Perimeter: Unframed.
3. Copy: Raised, Tactile and braille.
4. Character Style: Helvetica.
5. Text: Room name and number as shown on the finish schedule (and confirmed by the Owner).
6. Message: Fixed.
7. Sizes:
   a. Sign: See Drawings.
   b. Character: Minimum 1-inch- high characters.
8. Colors:
   a. Character: One Color as selected by Architect.
   b. Background: Two Colors as selected by Architect.
9. Schedule: Provide signage identifying each room listed on Finish Schedule at each door leading to a room or space mounted on door latch side. Stairs and closets do not require identification.

B. Toilet Room Signs:

1. Material: Cast-acrylic sheet Plastic laminate Insert material.
2. Perimeter: Unframed.
3. Copy: Raised, Tactile and braille.
4. Character Style: Helvetica.
5. Text: According to requirements in the ADA or of authorities having jurisdiction, whichever are more stringent.
6. Message: Fixed.
7. Sizes:

   a. Sign: See Drawings.
   b. Character: Minimum 1-inch- high characters.

8. Colors:

   a. Character: White.
   b. Background: ADA Approved Color as selected by Architect.

9. Schedule: Provide at all Toilet Rooms and Locker Rooms.

C. Exit Signs:

1. Match material, perimeter, copy, character style, and colors of room panels signs.
2. Text: “EXIT”.
3. Locations: Provide sign at all exit doors, stairs, and other locations as required by IBC.

2.5 ACCESSORIES

A. Mounting Methods: Use double-sided vinyl tape fabricated from materials that are not corrosive to sign material and mounting surface.

B. Anchors and Inserts: Provide nonferrous-metal or hot-dip galvanized anchors and inserts for exterior installations and elsewhere as required for corrosion resistance. Use toothed steel or lead expansion-bolt devices for drilled-in-place anchors. Furnish inserts, as required, to be set into concrete or masonry work.

2.6 FINISHES, GENERAL

A. Comply with NAAMM's "Metal Finishes Manual for Architectural and Metal Products" for recommendations for applying and designating finishes.

B. Protect mechanical finishes on exposed surfaces from damage by applying strippable, temporary protective covering before shipping.

C. Appearance of Finished Work: Variations in appearance of abutting or adjacent pieces are acceptable if they are within one-half of range of approved Samples. Noticeable variations in same piece are not acceptable. Variations in appearance of other components are acceptable if they are within range of approved Samples and are assembled or installed to minimize contrast.

2.7 ALUMINUM FINISHES

A. Clear Anodic Finish: Manufacturer's standard clear anodic coating, 0.018 mm or thicker, over a satin (directionally textured) mechanical finish.

PART 3 - EXECUTION

3.1 EXAMINATION

A. Examine substrates, areas, and conditions, with Installer present, for compliance with requirements for installation tolerances and other conditions affecting performance of work.

B. Verify that items, including anchor inserts, provided under other sections of Work are sized and located to accommodate signs.

C. Examine supporting members to ensure that surfaces are at elevations indicated or required to comply with authorities having jurisdiction and are free from dirt and other deleterious matter.

D. Proceed with installation only after unsatisfactory conditions have been corrected.

3.2 INSTALLATION

A. General: Locate signs and accessories where indicated, using mounting methods of types described and in compliance with manufacturer's written instructions.

1. Install signs level, plumb, and at heights indicated, with sign surfaces free from distortion and other defects in appearance.

B. Wall-Mounted Panel Signs: Attach panel signs to wall surfaces using methods indicated below:

1. Vinyl-Tape Mounting: Use double-sided foam tape to mount signs to smooth, nonporous surfaces. Do not use this method for vinyl-covered or rough surfaces.
2. Hook-and-Loop Tapes: Use hook-and-loop tapes to mount signs to smooth, nonporous surfaces.
3. Where panel signs are mounted on glass, provide matching plate on opposite side of glass to conceal mounting materials.

C. Dimensional Characters: Mount characters using standard fastening methods recommended in writing by manufacturer for character form, type of mounting, wall construction, and condition of exposure indicated. Provide heavy paper template to establish character spacing and to locate holes for fasteners.

1. Flush Mounting: Mount characters with backs in contact with wall surface.

3.3 CLEANING AND PROTECTION

A. After installation, clean soiled sign surfaces according to manufacturer's written instructions. Protect signs from damage until acceptance by Owner.

END OF SECTION 101400

SECTION 102113 - TOILET COMPARTMENTS

PART 1 - GENERAL

1.1 RELATED DOCUMENTS

A. Drawings and general provisions of the Contract, including General and Supplementary Conditions and Division 01 Specification Sections, apply to this Section.

1.2 SUMMARY

A. Section Includes:

1. Solid-polymer toilet compartments configured as toilet enclosures.

B. Related Sections include the following:

1. Division 10 Section “Toilet, Bath and Laundry Accessories” for grab bars and partition-mounted accessories.

1.3 SUBMITTALS

A. Product Data: For each type of product indicated. Include construction details, material descriptions, dimensions of individual components and profiles, and finishes.

B. Shop Drawings: For toilet compartments. Include plans, elevations, sections, details, and attachments to other work.

1. Show locations of cutouts for compartment-mounted toilet accessories.
2. Show locations of reinforcements for compartment-mounted grab bars.
3. Show locations of centerlines of toilet fixtures.

C. Samples for Initial Selection: For each type of unit indicated involving material and color selection.

D. Samples for Verification: For the following products, in manufacturer's standard sizes unless otherwise indicated:

1. Each type of material, color, and finish required for units, prepared on 6-inch- square Samples of same thickness and material indicated for Work.

1.4 QUALITY ASSURANCE

A. Regulatory Requirements: Comply with applicable provisions in the U.S. Architectural & Transportation Barriers Compliance Board's "Americans with Disabilities Act (ADA) and Architectural Barriers Act (ABA) Accessibility Guidelines for Buildings and Facilities" and ICC/ANSI A117.1 and Delaware State Architectural Accessibility Standards for toilet compartments designated as accessible.

1.5 PROJECT CONDITIONS

A. Field Measurements: Verify actual locations of toilet fixtures, walls, columns, ceilings, and other construction contiguous with toilet compartments by field measurements before fabrication.

PART 2 - PRODUCTS

2.1 MATERIALS

A. Aluminum Castings: ASTM B 26/B 26M.

B. Aluminum Extrusions: ASTM B 221.

C. Stainless-Steel Sheet: ASTM A 666, Type 304, stretcher-leveled standard of flatness.

D. Stainless-Steel Castings: ASTM A 743/A 743M.

2.2 SOLID-POLYMER UNITS

A. Manufacturers: Subject to compliance with requirements, provide products by one of the following:

1. Accurate Partitions Corporation.
2. Ampco, Inc.
3. Bradley Corporation; Mills Partitions.
4. Comtec Industries/Capitol Partitions.
5. General Partitions Mfg. Corp.
6. Global Steel Products Corp.
7. Hadrian Manufacturing Inc.
8. Knickerbocker Partition Corporation.
9. Metpar Corp.
10. Partition Systems Incorporated of South Carolina.
11. Rockville Partitions Incorporated.
12. Santana Products, Inc.
13. Sanymetal; a Crane Plumbing company.
14. Weis-Robart Partitions, Inc.

B. Toilet-Enclosure Style: Overhead braced.

C. Door, Panel, and Pilaster Construction: Solid, polypropylene (PP) panel material, not less than 1 inch thick, seamless, with eased edges, and with homogenous color and pattern throughout thickness of material.

1. Heat-Sink Strip: Manufacturer's standard continuous, stainless-steel strip fastened to exposed bottom edges of solid-polymer components to prevent burning.
2. Color and Pattern: Two colors and patterns in each room as selected by Architect from manufacturer's full range.

D. Pilaster Shoes: Manufacturer's standard design; polymer.

1. Polymer Color and Pattern: Contrasting with pilaster, as selected by Architect from manufacturer's full range.

E. Brackets (Fittings):

1. Full-Height (Continuous) Type: Manufacturer's standard design; polymer.

a. Polymer Color and Pattern: Matching panel.

2.3 ACCESSORIES

A. Hardware and Accessories: Manufacturer's standard design, heavy-duty operating hardware and accessories.

1. Material: Stainless steel.
2. Hinges: 54", #304, 16 gauge stainless steel multi-cam hinges fastened with tamper-proof fasteners.
3. Latch and Keeper: Manufacturer's standard latch unit (provide recessed if available as an option) designed for emergency access and with combination rubber-faced door strike and keeper. Provide units that comply with regulatory requirements for accessibility at compartments designated as accessible.
4. Coat Hook: Manufacturer's standard combination hook and rubber-tipped bumper, sized to prevent in-swinging door from hitting compartment-mounted accessories.
5. Door Bumper: Manufacturer's standard rubber-tipped bumper at out-swinging doors.
6. Door Pull: Manufacturer's standard unit at out-swinging doors that complies with regulatory requirements for accessibility. Provide units on both sides of doors at compartments designated as accessible.

B. Overhead Bracing: Manufacturer's standard continuous, extruded-aluminum head rail with antigrip profile and in manufacturer's standard finish.

C. Anchorages and Fasteners: Manufacturer's standard exposed fasteners of stainless steel with theft-resistant-type heads. Provide sex-type bolts for through-bolt applications. For concealed anchors, use stainless steel.

2.4 FABRICATION

A. Overhead-Braced Units: Provide manufacturer's standard corrosion-resistant supports, leveling mechanism, and anchors at pilasters to suit floor conditions. Provide shoes at pilasters to conceal supports and leveling mechanism.

B. Door Size and Swings: Unless otherwise indicated, provide 24-inch- wide, in-swinging doors for standard toilet compartments and 36-inch- wide, out-swinging doors with a minimum 32-inch- wide, clear opening for compartments designated as accessible. Ambulatory stalls to have 34" wide out-swinging doors with a minimum clear width of 32"

PART 3 - EXECUTION

3.1 INSTALLATION

A. General: Comply with manufacturer's written installation instructions. Install units rigid, straight, level, and plumb. Secure units in position with manufacturer's recommended anchoring devices. Coordinate and provide adequate support, bracing, and blocking for partitions with grab bars as required to comply with load requirements.

1. Maximum Clearances:

a. Pilasters and Panels: 1/2 inch.
b. Panels and Walls: 1 inch.

B. Overhead-Braced Units: Secure pilasters to floor and level, plumb, and tighten. Set pilasters with anchors penetrating not less than 1-3/4 inches into structural floor unless otherwise indicated in manufacturer's written instructions. Secure continuous head rail to each pilaster with no fewer than two

fasteners. Hang doors to align tops of doors with tops of panels, and adjust so tops of doors are parallel with overhead brace when doors are in closed position.

3.2 ADJUSTING

A. Hardware Adjustment: Adjust and lubricate hardware according to hardware manufacturer's written instructions for proper operation. Set hinges on in-swinging doors to hold doors open approximately 30 degrees from closed position when unlatched. Set hinges on out-swinging doors to return doors to fully closed position.

END OF SECTION 102113

SECTION 102800 – TOILET, BATH AND LAUNDRY ACCESSORIES

PART 1 - GENERAL

1.1 RELATED DOCUMENTS

A. Drawings and general provisions of the Contract, including General and Supplementary Conditions and Division 1 Specification Sections, apply to this Section.

1.2 SUMMARY

A. This Section includes the following:

1. Public-use washroom accessories.
2. Public-use shower room accessories.
3. Underlavatory guards.
4. Custodial accessories

B. Owner-Furnished Material: Soap Dispensers.

1.3 SUBMITTALS

A. Product Data: For each type of product indicated. Include the following:

1. Construction details and dimensions.
2. Anchoring and mounting requirements, including requirements for cutouts in other work and substrate preparation.
3. Material and finish descriptions.
4. Features that will be included for Project.
5. Manufacturer's warranty.

B. Product Schedule: Indicating types, quantities, sizes, and installation locations by room of each accessory required.

1. Identify locations using room designations indicated on Drawings.
2. Identify products using designations indicated on Drawings.

1.4 COORDINATION

A. Coordinate accessory locations with other work to prevent interference with clearances required for access by people with disabilities, and for proper installation, adjustment, operation, cleaning, and servicing of accessories.

B. Deliver inserts and anchoring devices set into concrete or masonry as required to prevent delaying the Work.

1.5 WARRANTY

A. Special Mirror Warranty: Manufacturer's standard form in which manufacturer agrees to replace mirrors that develop visible silver spoilage defects and that fail in materials or workmanship within specified warranty period.

1. Warranty Period: Five (5) years from date of Substantial Completion.

PART 2 - PRODUCTS

2.1 MATERIALS

A. Stainless Steel: ASTM A 666, Type 304, 0.0312-inch minimum nominal thickness, unless otherwise indicated.

B. Steel Sheet: ASTM A 1008/A 1008M, Designation CS (cold rolled, commercial steel), 0.0359-inch minimum nominal thickness.

C. Galvanized Steel Sheet: ASTM A 653/A 653M, with G60 hot-dip zinc coating.

D. Galvanized Steel Mounting Devices: ASTM A 153/A 153M, hot-dip galvanized after fabrication.

E. Fasteners: Screws, bolts, and other devices of same material as accessory unit and tamper-and-theft resistant where exposed, and of galvanized steel where concealed.

F. Chrome Plating: ASTM B 456, Service Condition Number SC 2 (moderate service).

G. Mirrors: ASTM C 1503, Mirror Glazing Quality, clear-glass mirrors, nominal 6.0 mm thick.

H. ABS Plastic: Acrylonitrile-butadiene-styrene resin formulation.

2.2 PUBLIC-USE WASHROOM ACCESSORIES

A. Basis-of-Design Product: The design for accessories is based on products indicated. See Drawings for Toilet Accessory Schedule. Subject to compliance with requirements, provide the named product or a comparable product by one of the following:

1. A & J Washroom Accessories, Inc.
2. Bobrick Washroom Equipment, Inc.
3. Bradley Corporation.

B. Toilet Tissue Multi-Roll Dispenser (Drawing designation: **A**)

1. Basis-of-Design Product: **Bobrick; B-2888**.
2. Description: Roll-in-reserve dispenser with hinged front secured with tumbler lockset.
3. Mounting: Surface mounted.
4. Operation: Noncontrol delivery with theft-resistant spindle.
5. Capacity: Designed for 5-1/4 inch diameter tissue rolls.
6. Material and Finish: Stainless steel, No. 4 finish (satin).

C. Combination Towel (Roll) Dispenser/Waste Receptacle (Drawing designation: **D**)

1. Basis-of-Design Product: **Bobrick; B-39619**.
2. Description: Combination unit for dispensing preset length of roll paper towels, with removable waste receptacle.
3. Mounting: Surface mounted.
4. Minimum Towel-Dispenser Capacity: 8-inch wide, 800-foot long roll.
5. Minimum Waste Receptacle Capacity: 12 gal.
6. Material and Finish: Stainless steel, No. 4 finish (satin).
7. Liner: Reusable, vinyl waste-receptacle liner (Bobrick 3944-12).
8. Lockset: Tumbler type for towel dispenser compartment and waste receptacle.

D. Combination Towel (Roll) Dispenser/Waste Receptacle (Drawing designation: **E**)

1. Basis-of-Design Product: **Bobrick; B-3961**.
2. Description: Combination unit for dispensing preset length of roll paper towels, with removable waste receptacle.
3. Mounting: Semi-recessed.
4. Minimum Towel-Dispenser Capacity: 8-inch wide, 800-foot long roll.
5. Minimum Waste Receptacle Capacity: 12 gal.
6. Material and Finish: Stainless steel, No. 4 finish (satin).
7. Liner: Reusable, vinyl waste-receptacle liner (Bobrick 3944-12).
8. Lockset: Tumbler type for towel dispenser compartment and waste receptacle.

E. Liquid-Soap Dispenser (Drawing designation: **G**)

1. Provided by Owner.

F. Grab Bar (Drawing designation: **L, M, N**)

1. Basis-of-Design Product: **Bobrick; B-6806.99**.
2. Mounting: Flanges with concealed fasteners.
3. Material: Stainless steel, 0.05 inch thick.

    a. Finish: Smooth, No. 4, satin finish on ends and slip-resistant texture in grip area.

4. Outside Diameter: 1-1/2 inches.
5. Configuration and Length:

    a. Type L: 18” long (installed vertically).
    b. Type M: 36” long
    c. Type N: 42” long

G. Sanitary-Napkin Disposal Unit (Drawing designation: **B**)

1. Basis-of-Design Product: **Bobrick; B-270**.
2. Mounting: Surface mounted.
3. Door or Cover: Self-closing disposal-opening cover.
4. Receptacle: Removable.
5. Material and Finish: Stainless steel, No. 4 finish (satin).
6. Construction: All – Welded with radius corner and edges.

H. Mirror Unit (Drawing designation: **C, J,** & **K**)

1. Basis-of-Design Product: **Bobrick; B-165-2460 / B-165-1830 / B-165-3636**
2. Mirror: No.1 quality, ¼” float glass; selected for silvering, electrolytically copper-plated by the galvanic process and guaranteed for 10 years against silver spoilage.

    a. Corners are protected by friction-absorbing filler strips; back is protected by full-size, shock-absorbing, water-resistant, nonabrasive, 3/16” thick polyethylene padding.

3. Frame: Stainless-steel channel.

    a. Corners: Mitered and mechanically interlocked.

4. Hangers: Produce concealed, rigid, tamper- and theft-resistant installation, using method indicated below.

a. Wall bracket of 20 gauge galvanized steel. Incorporates lower support member, forming rigid rectangle, which engages lower back plate louvers to keep bottom of mirror against wall.

1) Snap Locking Design (for Mirrors up to 24” Wide): Locking devices automatically secure mirror to concealed wall hanger when it is lowered into final position. Locking devices may be unlocked by inserting two flat blade screwdrivers behind each side of mirror near the bottom or under the bottom of the mirror and pulling mirror bottom forward and then up.

2) Screw Locking Design (for Mirrors up to 36” Wide): Lock mirror to wall hanger by tightening Phillips-head locking screws that are concealed in the bottom of frame at points indicated by a *T*. Mirror may be unlocked from wall hanger by loosening locking screws and lifting mirror off of concealed wall hanger.

5. Size (WxH): Type C: 24” x 60”, Type J: 18” x 30”, Type K: 36” x 36”.

I. Electric Hand Dryer (Drawing designation: **P**) – Alternate

1. Product: **Dyson Airblade 13043-01**
2. Mounting: Surface mounted.
3. Material and Finish: Die-cast aluminum with glass lacquer finish.

2.3 PUBLIC-USE SHOWER ROOM ACCESSORIES

A. Basis-of-Design Product: The design for accessories is based on products indicated see Drawings for Toilet Accessory Schedule. Subject to compliance with requirements, provide the named product or a comparable product by one of the following:

1. A & J Washroom Accessories, Inc.
2. Bobrick Washroom Equipment, Inc.
3. Bradley Corporation.

B. Shower Curtain Rod (Drawing designation: **R**)

1. Basis-of-Design Product: **Bobrick; B-6107 (Length as required).**
2. Description: 1-inch OD; fabricated from nominal 0.0375-inch- thick stainless steel.
3. Mounting Flanges: Stainless-steel flanges designed for exposed fasteners.
4. Finish: No. 4 (satin).
5. Length: As required for applicable shower unit.

C. Shower Curtain (referenced in Drawing designation: **R**)

1. Basis-of-Design Product: **Bobrick; 204-2 / 204-3**.
2. Size: Minimum 6 inches wider than opening by 72 inches high.
3. Material: Vinyl, minimum 0.008-inch- thick, opaque, matte containing antibacterial and flame-retardant agents.
4. Color: White.
5. Grommets: Nickel-Plated Brass at minimum 6 inches o.c. through top hem.
6. Shower Curtain Hooks: **Bobrick 204-1**; Stainless steel, spring wire curtain hooks with snap fasteners, sized to accommodate specified curtain rod. Provide one hook per curtain grommet.

D. Robe Hook (Drawing designation: **Y**)

1. Basis-of-Design Product: **Bobrick; B-6727**.
2. Description: Surface mounted double robe hook with flange and support arm.
3. Mounting: Flanges with concealed fasteners.
4. Material and Finish: Stainless steel, No. 4 finish (satin).

2.4 UNDERLAVATORY GUARDS

A. Basis-of-Design Product: The design for accessories is based on products indicated. Subject to compliance with requirements, provide the named product or a comparable product by one of the following:

1. Plumberex Specialty Products, Inc.
2. TCI Products.
3. Truebro, Inc.

B. Underlavatory Guard (Drawing designation: **H**)

1. Basis-of-Design Product: **Truebro; Lav-Shield #2018**.

a. Provide factory pre-cut shield based on approved lavatory model.

2. Description: Single-piece conceals all lavatory piping, electronic faucet connections, mixing valves, trap primers, and instantaneous hot water heaters at once. Provides the proper knee and toe clearances mandated by the ADA for wheelchair users, prevents pipe component tampering. Can be quickly removed for convenient, unhindered access to all plumbing and mechanical components.

3. Material and Finish: Molded from impact-resistant, stain-resistant, and chemical-resistant .093" Boltaron 4333 Rigiwall E™ protective vinyl for durability, safety, and long life.

2.5 CUSTODIAL ACCESSORIES

A. Basis-of-Design Product: The design for accessories is based on products indicated. See Drawings for Toilet Accessory Schedule. Subject to compliance with requirements, provide the named product or a comparable product by one of the following:

1. A & J Washroom Accessories, Inc.
2. Bobrick Washroom Equipment, Inc.
3. Bradley Corporation.

B. Mop and Broom Holder (Drawing designation: **Z**):

1. Basis-of-Design Product: **Bobrick; B-239**.
2. Description: Unit with shelf, hooks, holders, and rod suspended beneath shelf.
3. Length: 34 inches.
4. Hooks: Four.
5. Mop/Broom Holders: Three, spring-loaded, rubber hat, cam type.
6. Material and Finish: Stainless steel, No. 4 finish (satin).

a. Shelf: Not less than nominal 0.05-inch- (1.3-mm-) thick stainless steel.

2.6 FABRICATION

A. General: Fabricate units with tight seams and joints, and exposed edges rolled. Hang doors and access panels with full-length, continuous hinges. Equip units for concealed anchorage and with corrosion-resistant backing plates.

B. Keys: Provide universal keys for internal access to accessories for servicing and resupplying. Provide minimum of ten keys to Owner's representative.

PART 3 - EXECUTION

3.1 INSTALLATION

A. Install accessories according to manufacturers' written instructions, using fasteners appropriate to substrate indicated and recommended by unit manufacturer. Install units level, plumb, and firmly anchored in locations and at heights indicated.

B. Grab Bars: Install to withstand a downward load of at least 250 lbf, when tested according to method in ASTM F 446.

3.2 ADJUSTING AND CLEANING

A. Adjust accessories for unencumbered, smooth operation. Replace damaged or defective items.

B. Remove temporary labels and protective coatings.

C. Clean and polish exposed surfaces according to manufacturer's written recommendations.

END OF SECTION 102800

SECTION 104400 - FIRE-PROTECTION SPECIALTIES

PART 1 - GENERAL

1.1 RELATED DOCUMENTS

A. Drawings and general provisions of the Contract, including General and Supplementary Conditions and Division 1 Specification Sections, apply to this Section.

1.2 SUMMARY

A. This Section includes the following:

1. Portable fire extinguishers.
2. Fire-protection cabinets for fire extinguishers.
3. Mounting brackets for fire extinguishers.

1.3 SUBMITTALS

A. Product Data: Include construction details, material descriptions, dimensions of individual components and profiles, and finishes for fire-protection cabinets.

1. Fire Extinguishers: Include rating and classification.
2. Fire-Protection Cabinets: Include roughing-in dimensions, details showing mounting methods, relationships of box and trim to surrounding construction, door hardware, cabinet type, trim style, and panel style.
3. Show location of knockouts for hose valves.

1.4 QUALITY ASSURANCE

A. Source Limitations: Obtain fire extinguishers and fire-protection cabinets through one source from a single manufacturer.

B. NFPA Compliance: Fabricate and label fire extinguishers to comply with NFPA 10, "Portable Fire Extinguishers."

C. Fire Extinguishers: Listed and labeled for type, rating, and classification by an independent testing agency acceptable to authorities having jurisdiction.

1. Provide fire extinguishers approved, listed, and labeled by FMG.

D. Fire-Rated Fire-Protection Cabinets: Listed and labeled to comply with requirements of ASTM E 814 for fire-resistance rating of walls where they are installed.

1.5 COORDINATION

A. Coordinate size of fire-protection cabinets to ensure that type and capacity of fire extinguishers indicated are accommodated.

B. Coordinate size of fire-protection cabinets to ensure that type and capacity of fire hoses, hose valves, and hose racks indicated are accommodated.

1.6 WARRANTY

A. Special Warranty: Manufacturer's standard form in which manufacturer agrees to repair or replace components of portable fire extinguishers that fail in materials or workmanship within specified warranty period.

1. Failures include, but are not limited to, the following:

a. Failure of hydrostatic test according to NFPA 10.
b. Faulty operation of valves or release levers.

2. Warranty Period: Six years from date of Substantial Completion.

PART 2 - PRODUCTS

2.1 MANUFACTURERS

A. In other Part 2 articles where titles below introduce lists, the following requirements apply to product selection:

1. Manufacturers: Subject to compliance with requirements, provide products by one of the manufacturers specified.

2.2 MATERIALS

A. Cold-Rolled Steel Sheet: ASTM A 1008/A 1008M, Commercial Steel (CS), Type B.

B. Tempered Float Glass: ASTM C 1048, Kind FT, Condition A, Type I, Quality q3, 3 mm thick, Class 1 (clear).

2.3 PORTABLE FIRE EXTINGUISHERS

A. Manufacturers:

1. Amerex Corporation.
2. Ansul Incorporated.
3. Badger Fire Protection.
4. Buckeye Fire Equipment Company.
5. Fire End & Croker Corporation.
6. General Fire Extinguisher Corporation.
7. JL Industries, Inc.
8. Kidde Fyrnetics.
9. Larsen's Manufacturing Company.
10. Modern Metal Products; Div. of Technico.
11. Moon American.
12. Potter Roemer; Div. of Smith Industries, Inc.
13. Watrous; Div. of American Specialties, Inc.

B. General: Provide fire extinguishers of type, size, and capacity for each fire-protection cabinet and mounting bracket indicated.

1. Valves: Manufacturer's standard.
2. Handles and Levers: Manufacturer's standard.
3. Instruction Labels: Include pictorial marking system complying with NFPA 10, Appendix B.

C. Multipurpose Dry-Chemical Type in Steel Container Insert (Drawing designation: **FEC & FE**) - UL-rated 2-A:10-B:C, 5-lb nominal capacity, with monoammonium phosphate-based dry chemical in enameled-steel container.

1. Basis of Design: JL Industries, Inc.: Cosmic 5E

2.4 FIRE-PROTECTION CABINET (**FEC & FEC-2**)

A. Manufacturers:

1. Fire End & Croker Corporation.
2. General Accessory Mfg. Co.
3. JL Industries, Inc.
4. Kidde Fyrnetics.
5. Larsen's Manufacturing Company.
6. Modern Metal Products; Div. of Technico.
7. Moon American.
8. Potter Roemer; Div. of Smith Industries, Inc.
9. Watrous; Div. of American Specialties, Inc.

B. Cabinet Type: Basis of Design: JL Industries, Inc.: Cosmopolitan 1037 (semi-recessed) and Cosmopolitan 1033 (surface mounted).

C. Cabinet Construction:

a. FEC: Nonrated.
b. FEC-2: Fire-FX option for 1 hr. rated walls.

D. Cabinet Material: Stainless-steel sheet.

E. Semi-recessed Cabinet: Cabinet box partially recessed in walls of shallow depth to suit style of trim indicated; with one-piece combination trim and perimeter door frame overlapping surrounding wall surface with exposed trim face and wall return at outer edge (backbend).

1. Square-Edge Trim: 3-inch backbend depth.

F. Surface-mounted Cabinet: Cabinet box mounted on surface of walls.

G. Cabinet Trim Material: Same material and finish as door.

H. Door Material: Stainless-steel sheet.

I. Door Style: Fully glazed panel with frame.

J. Door Glazing: Tempered float glass (clear).

K. Door Hardware: Manufacturer's standard door-operating hardware of proper type for cabinet type, trim style, and door material and style indicated.

1. Provide projecting door pull and friction latch.
2. Provide continuous hinge, of same material and finish as trim, permitting door to open 180 degrees.

L. Accessories:

1. Mounting Bracket: Manufacturer's standard steel, designed to secure fire extinguisher to fire-protection cabinet, of sizes required for types and capacities of fire extinguishers indicated, with plated or baked-enamel finish.
2. Lettered Door Handle: One-piece, cast-iron door handle with the word "FIRE" embossed into face.
3. Door Lock: Cylinder lock, keyed alike to other cabinets.
4. Identification: Lettering complying with authorities having jurisdiction for letter style, size, spacing, and location. Locate as indicated by Architect.

    a. Identify fire extinguisher in fire-protection cabinet with the words "FIRE EXTINGUISHER."

        1) Location: Applied to cabinet glazing.
        2) Application Process: Pressure-sensitive vinyl letters.
        3) Lettering Color: Red.
        4) Orientation: Vertical.

M. Finishes:

1. Manufacturer's standard Stainless Steel with #4 finish

2.5 MOUNTING BRACKETS (**FE**)

A. Manufacturers:

1. Amerex Corporation.
2. Ansul Incorporated.
3. Badger Fire Protection.
4. Buckeye Fire Equipment Company.
5. Fire End & Croker Corporation.
6. General Fire Extinguisher Corporation.
7. JL Industries, Inc.
8. Larsen's Manufacturing Company.
9. Potter Roemer; Div. of Smith Industries, Inc.

B. Mounting Brackets: Manufacturer's standard galvanized steel, designed to secure fire extinguisher to wall or structure, of sizes required for types and capacities of fire extinguishers indicated, with plated or baked-enamel finish.

1. Color: Red.

C. Identification: Lettering complying with authorities having jurisdiction for letter style, size, spacing, and location. Locate as indicated by Architect.

1. Identify bracket-mounted fire extinguishers with the words "FIRE EXTINGUISHER" in red letter decals applied to mounting surface.

    a. Orientation: Vertical.

2.6 FABRICATION

A. Fire-Protection Cabinets: Provide manufacturer's standard box (tub), with trim, frame, door, and hardware to suit cabinet type, trim style, and door style indicated.

1. Weld joints and grind smooth.

2. Construct fire-rated cabinets with double walls fabricated from 0.0428-inch- thick, cold-rolled steel sheet lined with minimum 5/8-inch- thick, fire-barrier material.

a. Provide factory-drilled mounting holes.

B. Cabinet Doors: Fabricate doors according to manufacturer's standards, from materials indicated and coordinated with cabinet types and trim styles selected.

1. Fabricate door frames with tubular stiles and rails and hollow-metal design, minimum 1/2 inch thick.
2. Miter and weld perimeter door frames.

C. Cabinet Trim: Fabricate cabinet trim in one piece with corners mitered, welded, and ground smooth.

2.7 FINISHES, GENERAL

A. Comply with NAAMM's "Metal Finishes Manual for Architectural and Metal Products" for recommendations for applying and designating finishes.

B. Finish fire-protection cabinets after assembly.

C. Appearance of Finished Work: Variations in appearance of abutting or adjacent pieces are acceptable if they are within one-half of the range of approved Samples. Noticeable variations in the same piece are not acceptable. Variations in appearance of other components are acceptable if they are within the range of approved Samples and are assembled or installed to minimize contrast.

2.8 STEEL FINISHES

A. Surface Preparation: Clean surfaces of dirt, oil, grease, mill scale, rust, and other contaminants that could impair paint bond using manufacturer's standard methods.

PART 3 - EXECUTION

3.1 EXAMINATION

A. Examine walls and partitions for suitable framing depth and blocking where recessed and semi-recessed cabinets will be installed.

B. Examine fire extinguishers for proper charging and tagging.

1. Remove and replace damaged, defective, or undercharged units.

C. Proceed with installation only after unsatisfactory conditions have been corrected.

3.2 PREPARATION

A. Prepare recesses for semi-recessed fire-protection cabinets as required by type and size of cabinet and trim style.

3.3 INSTALLATION

A. General: Install fire-protection specialties in locations and at mounting heights indicated or, if not indicated, at heights acceptable to authorities having jurisdiction.

B. Fire-Protection Cabinets: Fasten fire-protection cabinets to structure, square and plumb.

1. Unless otherwise indicated, provide recessed fire-protection cabinets. If wall thickness is not adequate for recessed cabinets, provide semi-recessed fire-protection cabinets.

2. Fasten mounting brackets to inside surface of fire-protection cabinets, square and plumb.

C. Mounting Brackets: Fasten mounting brackets to surfaces, square and plumb, at locations indicated.

D. Identification: Apply vinyl lettering at locations indicated.

3.4 ADJUSTING AND CLEANING

A. Remove temporary protective coverings and strippable films, if any, as fire-protection specialties are installed, unless otherwise indicated in manufacturer's written installation instructions.

B. Adjust fire-protection cabinet doors to operate easily without binding. Verify that integral locking devices operate properly.

C. On completion of fire-protection cabinet installation, clean interior and exterior surfaces as recommended by manufacturer.

D. Touch up marred finishes, or replace fire-protection cabinets that cannot be restored to factory-finished appearance. Use only materials and procedures recommended or furnished by fire-protection cabinet manufacturer.

E. Replace fire-protection cabinets that have been damaged or have deteriorated beyond successful repair by finish touchup or similar minor repair procedures.

END OF SECTION 104400

SECTION 105613 - METAL STORAGE SHELVING

PART 1 - GENERAL

1.1 RELATED DOCUMENTS

A. Drawings and general provisions of the Contract, including General and Supplementary Conditions and Division 1 Specification Sections, apply to this Section.

1.2 SUMMARY

A. This Section includes the following:

1. Post-and-beam metal storage shelving.

1.3 PERFORMANCE REQUIREMENTS

A. Structural Performance for Post-and-Beam Metal Storage Shelving: Provide metal storage shelving capable of withstanding the loads indicated when tested according to MH 28.2, "Specification for the Design and Testing of Metal--Wood Shelving."

1.4 SUBMITTALS

A. Product Data: Include rated capacities, construction details, material descriptions, dimensions of individual components and profiles, and finishes for metal storage shelving.

B. Shop Drawings: Show fabrication and installation details for metal storage shelving, including upright-to-shelf/arm connections, lateral bracing, and attachments to other work. Include plans, elevations, sections, details, and relationship to other work.

C. Coordination Drawings: Reflected ceiling plans, drawn to scale, on which the following items are shown and coordinated with each other, based on input from installers of the items involved:

1. Suspended ceiling components.

D. Samples for Initial Selection: For units with factory-applied color finishes. Include similar Samples of accessories involving color selection.

E. Product Schedule: For metal storage shelving. Use same designations indicated on Drawings.

F. Maintenance Data: For metal storage shelving to include in maintenance manuals.

1.5 QUALITY ASSURANCE

A. Installer Qualifications: Manufacturer's authorized representative who is trained and approved for installation of units required for this Project.

B. Source Limitations: Obtain metal storage shelving through one source from a single manufacturer.

1.6 DELIVERY, STORAGE, AND HANDLING

A. Deliver metal storage shelving palleted, wrapped, or crated to provide protection during transit and Project-site storage.

1.7 PROJECT CONDITIONS

A. Environmental Limitations: Do not deliver or install metal storage shelving until spaces are enclosed and weatherproof, wet work in spaces is completed and dry, and ambient temperature is being maintained at the levels indicated for Project when occupied for its intended use.

1.8 COORDINATION

A. Coordinate locations and installation of metal storage shelving that may interfere with ceiling systems including lighting, HVAC, and sprinklers.

PART 2 - PRODUCTS

2.1 MANUFACTURERS

A. In other Part 2 articles where titles below introduce lists, the following requirements apply to product selection:

1. Basis-of-Design Product: The design for each type of metal storage shelving is based on the product named. Subject to compliance with requirements, provide either the named product or a comparable product by one of the other manufacturers specified.

2.2 MATERIALS

A. Hot-Rolled Steel Sheet: ASTM A 1011/A 1011M, Commercial Steel (CS), Type B; free of scale, pitting, or surface defects; pickled and oiled.

B. Cold-Rolled Steel Sheet: ASTM A 1008/A 1008M, Commercial Steel (CS), Type B.

C. Metallic-Coated Steel Sheet: ASTM A 653/A 653M, Commercial Steel (CS), Type B; with G60 zinc (galvanized) or A60 zinc-iron-alloy (galvannealed) coating.

D. Steel Tubing: ASTM A 513, Type 2.

E. Particleboard: ANSI A208.1, Grade M-2-Exterior Glue.

2.3 POST-AND-BEAM METAL STORAGE SHELVING **(MS)**

A. General: Factory-formed, field-assembled, freestanding, post-and-beam metal storage shelving system; designed for shelves to be supported by beams that span between and are supported by corner posts, with shelves adjustable over the entire height of shelving unit. Fabricate initial shelving unit with a post at each corner. Fabricate additional shelving units similarly, so each unit is independent or as add-on units, designed to share two corner posts with initial shelving unit. Provide fixed top and bottom shelves, adjustable intermediate shelves, and accessories indicated.

1. Basis-of-Design Product: **Penco Product, Inc.; Rivetrite Boltless Shelving** or a comparable product by one of the following:
2. Manufacturers:

a. Allied System Products, Inc.
b. AMSCOR American Steel Corporation
c. Borroughs Corporation.
d. Hallowell (a Division of List Industries, Inc.).

B. Posts: Fabricated from 0.0677-inch- thick, cold-rolled steel; in 1-1/2-by-1-1/2-inch angle shape; with perforations at 1-1/2 inches o.c. to receive shelf-to-post connectors.

1. Add-On Shelf Posts: 0.0677-inch- thick, cold-rolled steel, in 3 by 1-1/2-inch T-shaped; perforated to match main posts.

C. Beams: Fabricated from 0.0677-inch- thick, cold-rolled steel; in manufacturer's standard shape; with projecting rivets at each end designed to engage posts. Provide beam at each side of each shelf, with center supports as required for load-carrying capacity.

1. Provide top, bottom, and intermediate shelf beams with single rivets.
2. Provide top and bottom shelf beams with double rivets and intermediate shelf beams with single rivets.

D. Flat Metal Shelves: Fabricated from 0.0329-inch- thick, metallic-coated steel sheet.

1. Fabricate fronts and backs of shelves with box-formed edges, with corners lapped and welded.

E. Shelf Capacity: 600 lb.

F. Shelf Quantity: Three shelves per shelving unit in addition to top and bottom shelf.

G. Overall Unit Width: 36 inches or 48 inches, see schedule.

H. Overall Unit Depth: 18 inches or 24 inches, see schedule.

I. Overall Unit Height: 72 inches.

J. Accessories:

1. Tie Plates: 0.0677-inch- thick, cold-rolled steel, finished to match posts; designed for joining posts of adjacent shelving units.
2. Supports: back-to-back type that bolt to posts; as required for shelving unit stability.

K. Finish: Manufacturer's standard baked enamel or color coated.

L. Schedule (see drawings for designations):

1. MS-1: 48”W x 24”D.
2. MS-2: 36”W x 24”D.

2.4 FABRICATION

A. Shop Assembly: Preassemble items in shop to greatest extent possible to minimize field splicing and assembly. Use connections that maintain structural value of joined pieces. Clearly mark units for reassembly and coordinated installation.

B. Fabricate metal storage shelving square and rigid with posts plumb and true, and shelves flat and free of dents or distortion. Fabricate connections to form a rigid structure, free of buckling and warping.

C. Form backs of shelving units up to 48 inches wide from 1 piece.

D. Shear and punch metals cleanly and accurately. Remove burrs.

E. Form edges and corners free of sharp edges or rough areas. Fold back and crimp exposed edges of unsupported sheet metal to form a 1/2-inch- wide hem on the concealed side; ease edges of metal plate to radius of approximately 1/32 inch.

F. Form metal in maximum lengths to minimize joints. Form bent-metal corners to smallest radius possible without causing grain separation or otherwise impairing work.

G. Weld corners and seams continuously to comply with referenced AWS standard and the following:

1. Use materials and methods that minimize distortion and develop strength and corrosion resistance of base metals.
2. Obtain fusion without undercut or overlap.
3. Remove welding flux immediately.
4. At exposed connections, finish exposed welds and surfaces smooth and blended so no roughness shows after finishing and contour of welded surface matches that of adjacent surface.
5. Weld before finishing components to greatest extent possible. Remove weld spatter and welding oxides from exposed surfaces by descaling or grinding.

H. Build in straps, plates, brackets, and other reinforcements as needed to support shelf loading.

I. Cut, reinforce, drill, and tap metal fabrications to receive hardware, fasteners, and similar items.

J. Form exposed work true to line and level with accurate angles and surfaces and straight sharp edges.

K. Form exposed connections with hairline joints, flush and smooth, using concealed fasteners where possible. Locate joints where least conspicuous.

2.5 FINISHES, GENERAL

A. Comply with NAAMM's "Metal Finishes Manual for Architectural and Metal Products" for recommendations for applying and designating finishes.

B. Finish all steel surfaces, components, and accessories except prefinished stainless-steel and chrome-plated surfaces.

2.6 GALVANIZED STEEL FINISHES

A. Surface Preparation: Clean surfaces with nonpetroleum solvent so surfaces are free of oil and other contaminants. After cleaning, apply a conversion coating suited to the organic coating to be applied over it. Clean welds, mechanical connections, and abraded areas, and apply galvanizing repair paint specified below to comply with ASTM A 780.

1. Galvanizing Repair Paint: High-zinc-dust-content paint for regalvanizing welds in steel, complying with SSPC-Paint 20.

B. Baked-Enamel Finish: Immediately after cleaning and pretreating, apply manufacturer's standard 2-coat, baked-enamel finish consisting of prime coat and thermosetting topcoat, with a minimum dry film thickness of 1 mil for topcoat. Comply with paint manufacturer's written instructions for applying and baking to achieve a minimum dry film thickness of 2 mils.

1. Color and Gloss: As selected by Architect from manufacturer's full range.

PART 3 - EXECUTION

3.1 EXAMINATION

A. Examine areas, with Installer present, for compliance with requirements for installation tolerances and other conditions affecting performance of work.

B. Examine floors for suitable conditions where metal storage shelving will be installed.

C. Examine walls and ceilings to which metal storage shelving will be attached for properly located blocking, grounds, or other solid backing for attachment of support fasteners.

D. Proceed with installation only after unsatisfactory conditions have been corrected.

3.2 INSTALLATION

A. Install metal storage shelving level, plumb, square, rigid, and true.

1. Adjust post base bolt leveler as required to achieve level and plumb installation.
2. Connect side-to-side and back-to-back shelving units together at corner posts with support ties.
3. Install shelves in each shelving unit at spacing indicated on Drawings or, if not indicated, at equal spacing.

a. End-Panel-Support Metal Storage Shelving: Install horizontal shelf support at front and back of each shelf.
b. Post-and-Beam Metal Storage Shelving: Install beams with rivets fully engaged in post perforations.

3.3 ADJUSTING AND CLEANING

A. Verify that shelves adjust easily and properly.

B. On completion of installation, clean exposed surfaces as recommended by manufacturer.

C. Touch up marred finishes or replace metal storage shelving that cannot be restored to factory-finished appearance. Use only materials and procedures recommended or furnished by metal storage shelving manufacturer.

1. Galvanized Surfaces: Clean field welds, bolted connections, and abraded areas and repair galvanizing to comply with ASTM A 780.

D. Replace metal storage shelving that has been damaged or has deteriorated beyond successful repair by finish touchup or similar minor repair procedures.

END OF SECTION 105613

SECTION 113100 - RESIDENTIAL APPLIANCES

PART 1 - GENERAL

1.1 RELATED DOCUMENTS

A. Drawings and general provisions of the Contract, including General and Supplementary Conditions and Division 01 Specification Sections, apply to this Section.

1.2 SUMMARY

A. Section Includes:

1. Cleaning appliances.

1.3 ACTION SUBMITTALS

A. Product Data: For each type of product.

1. Include installation details, material descriptions, dimensions of individual components, and finishes for each appliance.
2. Include rated capacities, operating characteristics, electrical characteristics, and furnished accessories.

1.4 INFORMATIONAL SUBMITTALS

A. Sample Warranties: For manufacturers' special warranties.

1.5 CLOSEOUT SUBMITTALS

A. Operation and Maintenance Data: For each residential appliance to include in operation and maintenance manuals.

1.6 WARRANTY

A. Special Warranties: Manufacturer agrees to repair or replace residential appliances or components that fail in materials or workmanship within specified warranty period[**.**][**except as qualified below:**]

1. Warranty Period: [**Two**] [**Five**] <**Insert number**> years from date of Substantial Completion.

B. Clothes Washer: [Full warranty, including parts and labor,] [Limited warranty, including parts and labor for first year and parts thereafter,] <Insert description> for on-site service on the product.

1. Warranty Period: [**Two**] [**Three**] <**Insert number**> years from date of Substantial Completion.

PART 2 - PRODUCTS

2.1 PERFORMANCE REQUIREMENTS

A. Electrical Appliances: Listed and labeled as defined in NFPA 70, by a qualified testing agency, and marked for intended location and application.

B. Gas-Fueled Appliances: Certified by a qualified testing agency for each type of gas-fueled appliance according to ANSI Z21 Series standards.

C. Accessibility: Where residential appliances are indicated to comply with accessibility requirements, comply with applicable provisions in the DOJ's 2010 ADA Standards for Accessible Design and ICC A117.1.

2.2 CLOTHES WASHERS AND DRYERS

A. Clothes Washer (**CW-1**): Complying with AHAM HLW-1.

1. Products: Subject to compliance with requirements, provide one of the following:

   a. Basis-of-Design: General Electric Company (GE Appliances); WCVH4800KWW.
   b. LG Electronics; **<Insert product designation>**.
   c. Maytag; a division of Whirlpool Corporation; **<Insert product designation>**.
   d. Samsung; **<Insert product designation>**.

2. Type: Stacking, front-loading unit.
3. Dimensions:

   a. Width: 23-1/2 inches (597 mm).
   b. Depth: 26-1/2 inches (673 mm).
   c. Height: 33-1/4 inches (844 mm).

4. Drum: Perforated stainless steel.

   a. Capacity: 2.2 cubic feet.

5. Controls: Touch-pad controls for water-fill levels, wash/rinse water temperatures, and variable-speed and fabric selectors.

   a. Wash Cycles: 10 wash cycles, including regular, delicate, and permanent press.
   b. Wash Temperatures: Three.
   c. Speed Combinations: Five.

6. Electrical Power: 120 V, 60 Hz, 1 phase, 15 A.
7. Motor: Manufacturer's standard with built-in overload protector.
8. Features:

   a. Self-cleaning lint filter.
   b. Inlet Hoses: Minimum length 60 inches (1525 mm).
   c. Drain Hoses: Minimum length 48 inches (1220 mm).
   d. Self-leveling legs.
   e. Automatic dispenser for bleach, fabric softener, and detergent.
   f. Spin-cycle safety switch.

g. End-of-cycle signal.
h. Extra-rinse option.
i. Delay-wash option.
j. Electronic temperature control.
k. Water levels automatically set.
l. Pedestal: Manufacturer's standard height laundry pedestal with storage drawer, matching appliance finish.

9. ENERGY STAR: Provide appliances that qualify for the EPA/DOE ENERGY STAR product-labeling program.
10. Appliance Finish: Enamel.

a. Color: White.

B. Clothes Dryer (CD-1): Complying with AHAM HLD-1.

1. Products: Subject to compliance with requirements, provide one of the following:

a. Basis-of Design: General Electric Company (GE Appliances); DCVH480EKWW.
b. LG Electronics; **<Insert product designation>**.
c. Maytag; a division of Whirlpool Corporation; **<Insert product designation>**.
d. Samsung; **<Insert product designation>**.

2. Type: Stacking, frontloading, [**gas**] [**electric**] unit.
3. Dimensions:

a. Width: 23-1/2 inches (597 mm).
b. Depth: 25-11/16 inches (652 mm).
c. Height: 33-3/8 inches (848 mm).

4. Drum: Perforated stainless steel.

a. Capacity: 4.0 cubic feet.

5. Controls: Touch-pad controls for drying cycle, temperatures, and fabric selectors.
6. Electric-Dryer Power: [**240 V, 60 Hz, 1 phase, 30 A**] [**As indicated on Drawings**] **<Insert requirement>**.
7. Gas-Dryer Power: [**120 V, 60 Hz, 1 phase, 15 A electric; 22,000-Btu/h (6400-W) gas**] [**As indicated on Drawings**] **<Insert requirement>**.
8. Features:

a. Removable lint filter.
b. Electronic temperature and moisture-level-sensor controls.
c. End-of-cycle signal.
d. Interior drum light.
e. Self-leveling legs.
f. Antibacterial cycle.
g. Stacking kit to stack dryer over washer.
h. Pedestal: Specified in Clothes Washer paragraph.

9. Appliance Finish: Enamel.

a. Color: White.

2.3 GENERAL FINISH REQUIREMENTS

A. Protect mechanical finishes on exposed surfaces from damage by applying a strippable, temporary protective covering before shipping.

B. Appearance of Finished Work: Noticeable variations in same piece are not acceptable. Variations in appearance of adjoining components are acceptable if they are within the range of approved Samples and are assembled or installed to minimize contrast.

PART 3 - EXECUTION

3.1 EXAMINATION

A. Examine substrates, areas, and conditions, with Installer present, for compliance with requirements for installation tolerances, power connections, and other conditions affecting installation and performance of residential appliances.

B. Examine roughing-in for piping systems to verify actual locations of piping connections before appliance installation.

C. Examine walls, ceilings, and roofs for suitable conditions where will be installed.

D. Prepare written report, endorsed by Installer, listing conditions detrimental to performance of the Work.

E. Proceed with installation only after unsatisfactory conditions have been corrected.

3.2 INSTALLATION

A. Install appliances according to manufacturer's written instructions.

B. Freestanding Equipment: Place units in final locations after finishes have been completed in each area. Verify that clearances are adequate to properly operate equipment.

3.3 DEMONSTRATION

A. Engage a factory-authorized service representative to train Owner's maintenance personnel to adjust, operate, and maintain residential appliances.

END OF SECTION 113100

SECTION 114000 – FOODSERVICE EQUIPMENT

PART 1 - GENERAL

1.1 DESCRIPTION

A. Scope: Furnish all labor, materials, services, equipment and appliances required to provide and deliver all foodservice equipment hereinafter specified into the building, uncrate, assemble, hang, set-in-place, level, and completely install, exclusive of final utility connections.

B. Related Work Specified Elsewhere:

1. All plumbing, electrical and ventilating work required in conjunction with commercial foodservice equipment including rough-in to points indicated on mechanical drawings, and final connections from rough-in points, electrical service to points of connection and final connections shall be by Divisions 22, 23 and 26.
2. Refrigeration work will be done by the Kitchen Equipment Contractor except for electrical connections to and between compressors, blower coils, controls, etc. These final connections shall be by Divisions 22 and 26.
3. All traps, steam traps, grease traps, line strainers, tail pieces, valves, stops, shut-offs, and fittings necessary for equipment specified will be furnished and installed under mechanical contract by Division 22 unless specifically called for otherwise under each item.
4. All line and disconnect switches, safety cut-offs and fittings, convenience boxes or other electrical controls, fittings and connections will be furnished and installed under electrical contract by Division 26, unless specifically indicated otherwise in the item specifications. Starting switches for certain specified pieces of foodservice equipment are to be provided by Kitchen Equipment Contractor. Those starting switches, if furnished loose as standard by Foodservice Manufacturers (other than fabricated items), shall be mounted and wired complete under Division 26.
5. Any sleeves or conduit required for refrigeration, syrup tubing, or carbonation tubing will be furnished and installed under Division 22.
6. Unless specifically called for in the Item Specifications, ventilating fans and all duct work between same and ceiling rough-in openings, and from same to discharge opening in building will be furnished and installed by Division 22.

1.2 DEFINITIONS

A. All references to the terms "Contractor", "Kitchen Equipment Contractor", or "K.E.C." in the specifications and/or on the drawings shall be defined to mean the Kitchen Equipment Contractor.

B. All references to the term "Owner" in the specifications and/or on the drawings shall be defined to mean the Owner or Owner's designated representative and the Foodservice Equipment Consultant.

C. All references to the term "Consultant" or "Foodservice Equipment Consultant" in the specifications and/or on the drawings shall be defined to mean **NYIKOS ASSOCIATES, INC.** its employees, and authorized representatives and is referred to throughout the contract documents as if singular in number and masculine in gender.

D. The phrase "The K.E.C. shall" or "by the K.E.C.", as applicable, is understood to be included as a part of each sentence, paragraph or article of these specifications unless otherwise indicated or specified.

1.3 QUALITY ASSURANCE

A. Qualification of Suppliers:

1. Commercial foodservice equipment suppliers shall submit satisfactory evidence of compliance with the following qualifications and conditions to be approved.

    a. Successful completion of jobs of comparable scope.
    b. Have manufacturer's authorization to distribute and install specified factory items of equipment.
    c. Maintain a permanent staff experienced in the installation of foodservice equipment and preparation of professional style rough-in drawings and brochures.
    d. Maintain or have access to fabrication shop meeting N.S.F. requirements. If other than foodservice equipment suppliers own fabrication shop, obtain Consultant approval of fabrication shop desired to be used.
    e. Maintain or have access to a readily available stock of repair and replacement parts, together with authorized service personnel.

B. Qualification of Fabricators:

1. Fabricators shall be an N.S.F. approved organization with trained personnel and facilities to properly design, detail and fabricate equipment in accordance with the specifications and standard details contained herein.
2. Custom fabricated equipment shall bear the National Sanitation Foundation seal of approval and listed as such under N.S.F. Standards No. 2 and No. 33.
3. Only one (1) fabricator shall be used for this project, and all equipment will be fabricated at the same shop. Where units cannot be fully shop-fabricated, complete fabrication at project site.
4. Acceptable fabricators are:

    a. Pro Stainless, Inc.; Keyser, WV
    b. Commercial Stainless, Inc.; Bloomsburg, PA
    c. Keystone Custom Fabricators, Inc.; Elizabeth, PA
    d. Eagle Spec Fab; Clayton, DE
    e. Select Stainless Inc.; Matthews, NC
    f. Other fabricators, as approved by Consultant.

C. Qualification of Manufacturers:

1. Manufacturers shall be regularly engaged in the production of items furnished and shall have demonstrated the capability to furnish similar equipment that performs the functions specified or indicated herein.

D. Standard Products:

1. Materials, products, and equipment furnished under this contract shall be the standard items of manufacturers regularly engaged in the production of such materials, products, and equipment and shall be of the manufacturer's latest design that complies with the specifications which have been produced and used successfully on other projects and in similar applications.
2. Discrepancies within contract documents should immediately be brought to the attention of the Consultant in writing for clarification prior to fabrication or ordering of standard items.

1.4 PLANS & SPECIFICATIONS

A. Specifications and drawings have been prepared to form the basis for procurement, erection, start-up and adjustment of all equipment in this contract. Plans and specifications shall be considered as mutually explanatory and work required by one, but not the other, shall be performed as though required by both. Items required by one, but not by the other shall be provided as though required by both. Work shall be accomplished as called for in specifications and shown on drawings, so that all items of equipment shall be completely functional for purpose for which they were designed. When there is any discrepancy

between drawings and specifications, drawings shall govern. Bidders should seek clarification of any discrepancies from the Consultant prior to bidding.

1.5 SUBMITTALS

A. General Requirements:

1. Within six (6) weeks or earlier, as required, assemble and submit all shop drawings, rough-in drawings, brochures, color samples, etc. as a complete package. There will be no review of partial submittals.
2. Any and all costs, to all trades and parties involved, arising from delay of project due to non-submittal of the complete package by the K.E.C. within a reasonable time period shall be borne solely by the K.E.C.
3. Identify each submittal by project name, date, contractor, submittal name, and any other necessary information to distinguish it from other submittals.

B. Shop Drawings:

1. Submit electronic copy of shop drawing on sheets equal in size to Contract Documents of equipment specified for custom fabrication including all accessories attached to each item.
2. Drawings shall be detailed and fully dimensioned to a minimum scale of 3/4"=1'-0" for plan and elevation views, and 1-1/2"=1'-0" for sections, based on the floor plan(s) and following item specifications. Drawings will be checked for thoroughness, accuracy, completeness, neatness, and returned for corrections, if necessary.

C. Rough-in Drawings:

1. Submit electronic copy of shop drawing on sheets equal in size to Contract Documents of detailed arrangement plans professionally prepared from architects dimensioned plans (not traced from Contract Documents) at a minimum scale of 1/4"=1'-0".
2. Equipment Layout Plan showing arrangement of all items specified and identified on schedule of equipment listing item number, description, quantity, manufacturer, model number, and remarks.
3. Ventilation Plan showing dimensioned locations of all duct openings for ventilators and dishmachines identifying size, c.f.m. required (exhaust and supply), static pressures, and connection heights.
4. Plumbing/Electrical Plans showing dimensioned locations, sizes, elevations and capacities of all utility services required for each item of equipment in relation to finished walls, columns, and heights above finished floor.
5. Special Conditions Plan showing exact dimensions and details of all masonry bases, floor depressions, critical partition locations/heights, wall openings, reinforcing for wall and/or ceiling mounted equipment, and conduit locations for soda and compressed gas lines.

D. Equipment Brochures:

1. Submit electronic copy of manufacturer's illustrations and technical data for approval prior to procurement. All items of Standard Manufacture shall be submitted, including items purchased to be built into fabricated equipment. Each illustration shall be marked to accurately describe the item to be furnished as specified. Include all deviations from standard information (i.e., voltage, phase, load, etc.).
2. Include a separate information sheet ahead of each illustration sheet showing all service connection sizes, electrical requirements, loads, consumptions, and all accessories specified.
3. Manufacturer's suggested schematic drawings for connection of mechanical and electrical services for such items as booster heaters, disposers, or any other item of equipment that may require the same.

E. Miscellaneous Shop Drawings:

1. Submit electronic copy of manufactured equipment specified requiring clarification and approval such as, walk-in cooler/freezer drawings, ventilator drawings, utility raceway drawings, and refrigeration system drawings.

F. Operation and Maintenance Manuals:

1. Submit electronic copy for all mechanically operated equipment of standard manufacture. Include operating and cleaning/maintenance instructions, parts listing, recommended parts inventory listing and purchase source, copy of warranties, and similar applicable information.
2. Brochure covers shall bear the job name, date, and name of contractor.

G. Manufacturer's List:

1. The K.E.C. shall submit in writing a list of all manufacturer's representatives of the food service equipment such as convection ovens, ranges, etc., and their authorized service agencies' addresses and telephone numbers; to be presented after submission of manufacture data.

H. Samples:

1. Samples of materials, products, and fabrication methods, shall be submitted for approval upon request at no additional cost, before proceeding with work.

I. Re-submission Requirements:

1. Shop Drawings:

a. Revise initial drawings as required and resubmit in accordance with submittal procedures.
b. Indicate on drawings all changes which have been made in addition to those requested by Consultant.

2. Product Data and Samples:

a. Submit new data and samples as required for initial submittal.
b. Make all re-submittals within fourteen (14) working days from date of Consultants previous action.

J. Approvals:

1. After approval of the submittals listed above, furnish as many prints and copies as are required for the various trades, the Owner, the Architect, and the Consultant.
2. The approval of the shop drawings will be general and shall not relieve the K.E.C. of responsibility for proper fitting, finishing, quantities, and erection of work in strict accordance with the contract requirements, nor does it relieve him of the responsibility of furnishing material and workmanship not indicated on approved shop drawings but required for the completion of his work.
3. Approval by the Consultant and/or Owner of the manufacturer's data submitted by the K.E.C. does not waive the responsibility of K.E.C. to furnish each item of equipment in complete compliance with the specifications and drawings. Discrepancies between Contract Documents and furnished equipment shall be corrected even after approval and installation of this equipment at no additional cost to the Owner.

1.6 PRODUCT DELIVERY, STORAGE AND HANDLING

A. Delivery:

1. Equipment shall be delivered to the job site only after the building is weather-safe and vandal-safe.

B. Storage:

1. Store equipment in an area convenient to the point of installation in such a way that it can be protected from the weather and job hazards.

C. Protection:

1. Wrapping and protective coatings shall remain on all items until ready for use and in the case of stainless steel items, until installation is complete and the job is ready for cleaning.
2. Existing equipment not scheduled for removal but to remain within the construction area shall be wrapped with protective plastic and/or padding to prevent damage and shall remain on all items until installation is complete and the job is ready for cleaning.

D. Damage:

1. All responsibility shall rest with the K.E.C. for any damage or loss incurred prior to final acceptance. Such items as may be lost or damaged shall immediately be replaced or repaired to a new condition to the complete satisfaction of and at no additional cost to the Owner.

1.7 JURISDICTION TRADE AGREEMENTS AND RESTRICTIONS

A. Include the work specified, shown or reasonably infer able as part of foodservice equipment. Portions of this work may be subcontracted to those qualified to do such work, as may be necessary because of jurisdictional trade agreements and restrictions.

1.8 REGULATIONS AND CODES

A. Except as otherwise indicated, each item of equipment shall comply with the latest current edition of the following standards as applicable to the manufacture, fabrication, and installation of the work in this section.

1. N.S.F. Standards: Comply with National Sanitation Foundation Standards and criteria, and provide N.S.F. "Seal of Approval" on each manufactured item and major items of custom-fabricated work.
2. U.L. Standards: For electrical components and assemblies, provide either U.L. labeled products or, where no labeling service is available, provide a complete index of the components used as selected from the U.L. "Recognized Component Index".
3. A.N.S.I. Standards: For gas-burning equipment, comply with A.N.S.I. Z21-Series standards. Comply with A.N.S.I. B57.1 for compressed gas cylinder connections and with applicable standards of the Compressed Gas Association for water connection air gaps and vacuum breakers.
4. A.G.A.: All gas-fired equipment shall be A.G.A. Approved, equipped to operate on the type gas available at the job site and shall contain 100% automatic safety shut-off devices.
5. N.F.P.A. Standards: Comply with N.F.P.A. Bulletin 96 for exhaust systems and with N.F.P.A. Bulletins 17, 17A & 96 and U.L. 300 for fire extinguishing systems.
6. A.S.M.E. Code: Comply with A.S.M.E. boiler code requirements for steam generating and steam heated equipment. Provide A.S.M.E. inspection, stamps, and certification of registration with National Board.
7. National Electric Code: Comply with N.E.C. Volume 5 for electrical wiring and devices included with foodservice equipment.
8. All authorities having jurisdiction over this type of equipment and/or installation.

9. Where specifications and/or drawings require mechanical, electrical or refrigeration work to be performed, such work shall be done in strict conformance to other portions of the Base Building Specification which sets forth standards for this type of work.
10. Where there exists two standards or codes for one type of work, the stricter method shall govern.

1.9 WARRANTIES

A. Warrantee in writing all equipment and fabrication against defects and workmanship for a period of two (2) years from date of acceptance.

1. Each piece of mechanical equipment shall be listed, together with the authorized service and repair agency whom the Owner will call should malfunctions occur within the two-year (2) guarantee period.

B. Refrigeration system compressors shall be warranted for five (5) years by the manufacturer. Free refrigeration service, including parts and labor, shall be furnished for two (2) years from date of acceptance.

1.10 JOB CONDITIONS

A. Visit the job site to field check actual wall dimensions and roughing-in and shall be responsible for fabricating and installing the equipment in accordance with the available space and utility services as they exist on the job site.

B. Check all door openings, passageways, elevators, etc., to be sure that the equipment can be conveyed to its proper location within the building and if necessary, check the possibility of holding wall erection, placement of doorjambs, windows, etc. for the purpose of moving the equipment to its proper location with the Contractor. Any removal and rebuilding of walls, partitions, doorjambs, etc. necessary to place the equipment, or if caused by incorrect information on the Contractor's drawings, shall be done at the expense of the K.E.C., at no additional cost to the Owner.

C. Notify the Consultant and Owner before fabrication of equipment of any discrepancies between plans and specifications and actual conditions on the job.

D. Before finished floors, walls, and/or ceilings are in place, physically check the location of all "rough-ins" at the job site. Report discrepancies in writing.

E. Any changes required after fabrication has been started to ensure equipment accurately fitting the space as it exists and conforming to actual field dimensions on the job shall be made at no additional cost to the Owner.

F. If special hoisting equipment and operators are required, include such cost as part of the bid for this work.

1.11 EXISTING EQUIPMENT

A. Re-Use and Relocation of Existing Equipment On-Site:

1. Dis-assemble, clean, repair, move, re-assemble and re-set listed existing items in new location as shown on plan.
2. Provide necessary hoisting apparatus as required to safely and effectively transport items to new location. Include wrapping or padding of sensitive items to protect against scratching or denting.
3. Any damages incurred as a result of the relocating of equipment shall be repaired by competent service agency to like-new condition with no additional cost to the contract price.

B. Cleaning and Repair:

1. The Equipment Contractor shall clean listed existing items and replace any defective parts.
2. Cleaning shall consist of the removal of residues of food, ingredients, dirt and all other soiling materials and extraneous matter.
3. Repairs and parts shall be for minor items such as: control knobs, pilot lamps, faucet washers, minor adjustments, etc.
4. Major repairs or parts required, which are only detectable during repairs, shall be noted in writing, with cost, to Owner for approval and addition to the contract price.

C. Storage and Protection:

1. Coordinate a suitable location within the building to store all existing equipment. Otherwise, provide secured on-site storage in the form of a trailer or shed.
2. Should on-site storage not be available, transport equipment to supplier's warehouse.
3. K.E.C. shall be responsible for protection from theft and damage of all existing equipment scheduled for re-use.

1.12 CHANGES IN THE WORK

A. The Owner reserves the right to require reasonable modification to be made in the routing of work and relocation of equipment. This specifically refers to conditions where interference occurs or where more desirable accessibility can be obtained or whose materials cannot be installed because of structural or mechanical conditions encountered. Such changes shall be made at no additional cost to the Owner.

1.13 PATENTS

A. Hold harmless and save the Owner and its officers, consultants, servants and employees from liability of any nature or kind, including costs and expenses for or on account of any copyrighted, patented, or un-patented invention, process, trademark, design, device, material, article, or appliance manufactured or used in the performance of the contract, including its use by the Owner, unless otherwise specifically stipulated in the Contract Documents.

B. If the Contractor has information that the process or article specified is an infringement of a patent, he shall be responsible for such loss unless he promptly gives such information to the Owner in writing. The contract price shall include all royalties or costs arising from the use of any or all of the above which are, in any way, involved in the contract.

1.14 CONTRACTOR'S WARRANTY

A. The Contractor represents and warrants:

1. That he is financially solvent and that he is experienced in and competent to perform the types of work or to furnish the plans, materials, supplies or equipment, to be so performed or furnished by him.
2. That he is familiar with all Federal, State, municipal, and department laws, ordinances, orders, and regulations, which may, in any way, affect the work of those employed therein, including, but not limited to, any special acts relating to the work or to the project of which it is a part.
3. That such temporary and permanent work required by the contract as is to be done by him can be satisfactorily constructed and used for the purpose for which it is intended and that such construction will not injure any person or damage any property.
4. That he has carefully examined the plans, specifications, addenda, if any, and the site of the work and that, from his own investigations, he has satisfied himself as to the nature and location of the work, the character, quality, and quantity of materials likely to be encountered, the character of equipment and other facilities needed for the performance of the work, the general and local conditions, and all other materials which may, in any way, affect the work or its performance.

5. That he has satisfied himself as to the existing openings and accesses to the foodservice area through which his equipment shall be required to pass and that he is responsible for his equipment being delivered in as many sections as necessary to conform to the available space dictated by these existing limitations.

1.15 SUBSTITUTIONS

A. Bids submitted shall be for the specific manufacturer and model, size, capacity, and accessories, as specified or shown on the drawings.

B. The K.E.C. may quote upon brands and models of equipment other than those specified as a substitute. In the event that it is desired to request approval of substitute material, product, article, process, or item of equipment in lieu of that which is specified, submit a written request at least (10) working days prior to date of bids, setting forth the proposed substitution in detail, including an itemized analysis of the addition or deduction in the amount of the contract, if any, which will result if the substitution is approved. Each such request shall include a complete description of the proposed substitute, the name of the material or equipment for which it is to be substituted, drawings, cuts, performance and test data and any other data or information necessary for a complete evaluation. If approved, bidders will be notified in the form of addendum.

C. The Contractor shall be held responsible for additional costs to himself or any other prime contractor for changes required to install materials, devices, equipment, etc., which the Contractor has substituted for that specified.

D. The Owner reserves the right to award a contract or contracts based upon the inclusion or exclusion of one or more of the alternate estimates. The description of all workmanship and materials under the various headings of the specifications shall have the same meaning and force when applied to similar workmanship and materials in the alternate. If the descriptions are not specific, the workmanship shall be the best quality and the materials the best commercial grade.

E. Whenever any product is specified in the Contract Documents by reference to the name, trade name, make, or catalog number of any manufacturer or supplier, the intent is not to limit competition but to establish a standard of quality which is necessary for the project. Products of other manufacturers meeting the established criteria will be considered. However, please take note that the plumbing, electrical, steam, heating, ventilating, and air-conditioning drawings prepared by the consulting engineers, have been engineered based on the first product named under each item number designation. Therefore, any other product which is submitted for approval in lieu of the primary item specified, shall conform to the rough-in requirements established for the first product named, as well as physical size and building construction requirements.

F. Any equipment listed which is not in accordance with the provisions of these specifications will be rejected. If the Contractor fails to submit for approval within the specified time the list of equipment as required herein, the Consultant shall then have the right to make the final equipment selection. The selection made by the Consultant shall strictly conform to these specifications and will be final and binding, and the items shall be furnished and installed by the Contractor without change in the contract price at the time of completion.

G. G. It shall be the responsibility of the K.E.C. to prove that substitutions are equal to specified items. **NYIKOS ASSOCIATES, INC.** as the Owner's representative, shall be the determining authority as to the acceptability or equality of the substitutions. <u>No substitutions shall be approved after bids are received</u>.

1.16 DESIGN/MODEL CHANGE, DISCONTINUED ITEMS

A. All equipment specified shall be of latest design. Any improvements made in design and construction of prefabricated items before equipment is actually delivered to the project site, shall be incorporated in equipment, at no additional cost, provided such incorporation does not delay delivery date of equipment.

B. In the event of an item being discontinued after specified and prior to delivery to project site, the K.E.C. shall be responsible for notifying the Consultant in writing of the discontinued item and request an alternate of equal performance, including all accessories, at no additional cost to the Owner.

PART 2 - PRODUCTS

2.1 GENERAL

A. The equipment and its component parts shall be new and unused. All items of standard manufactured equipment shall be current models at the time of delivery. All parts subject to wear, breakage, or distortion shall be accessible for adjustment, replacement, and repair.

B. Means shall be provided to ensure adequate lubrication for all moving parts. All oil holes, grease fittings, and filler caps shall be accessible without the use of tools.

C. The design of the equipment shall be such as to provide for safe and convenient operation. Covers or other safety devices shall be provided for all items of equipment presenting safety hazards. Such guards or safety devices shall not present substantial interference to the operation of the equipment. All guards shall provide easy access to the guarded parts.

D. Trim shall not be an acceptable substitute for accuracy and neatness. When trim is required and accepted by the Consultant and the Owner in lieu of rejection of items of equipment, it shall be the K.E.C.'s responsibility to provide same at no additional cost.

E. Unless otherwise specified herein, no material lighter than #20 gauge shall be incorporated into the work. All gauges for sheet iron and sheet steel shall be U.S. Standard Gauges, and finished equipment gauge thickness shall not vary more than 5% plus or minus from the thickness indicated below.

GAUGE	THICKNESS	GAUGE	THICKNESS
#10	0.1406	#16	0.0625
#12	0.1094	#18	0.0500
#14	0.0781	#20	0.0375

F. Materials or work described in words which have a well-known and acceptable trade meaning shall be held to refer to such accepted meanings.

2.2 MATERIALS

A. Refrigeration Systems:

1. Self-contained:

   a. Whether the units be top-mounted or cabinet-mounted, they shall be started by the K.E.C. and shall be tested for maintenance of temperature.
   b. All units shall be furnished with condensate evaporators.

2. Remote: Provide and install complete refrigeration system(s), charged, started, and operating properly, according to the Item Specifications and the following.

a. Single stage compressors with air-cooled condensers operating within the recommended range of suction discharge pressure of economical operation and within the required capacity.
b. All units shall be new and factory assembled, to operate with the refrigerant specified. Refrigerant R-404A shall be used for all medium and low temperature applications. Due to the unsettled nature of refrigerants, no refrigerant shall be used with a phase-out date of less than ten (10) years from the date of installation.
c. Compressors shall be accessible hermetic type, Copeland or approved equal, and shall be equipped with high-low pressure control, liquid line drier, sight glass, suction and discharge vibration eliminator, and head pressure control.
d. The system shall have a factory mounted and pre-wired control panel complete with main fused disconnect, compressor circuit breakers, contactors, and time clocks wired for single point power connection.
e. The supporting frame shall be constructed of structural steel, fully welded, and protected against rust and corrosion with one (1) coat primer, and two (2) coats paint, unless otherwise specified.
f. Systems specified for outdoor installation shall be fully protected in a weather-proofed housing with louvered front panel and hinged top, constructed to resist rust and corrosion, and furnished with low ambient controls. Crankcase heater shall be provided with every compressor.

3. Where specifications call for pre-piped lines (i.e., from a fixture to a valve compartment, etc.), provide such work in strict conformance with other sections of the specifications which set forth standards for this type of work or in conformity with the requirements of the Board of Fire Underwriters or ASHRAE Standards, whichever is greater.

4. Each refrigeration item specification is written to provide minimum specifications and scope of work. All refrigeration equipment shall be designed and installed to maintain the following general temperatures unless otherwise specified.

TYPE		REFRIGERATORS	FREEZERS
a.	Walk-In	+35º F./1.7º C.	-10º F./-23.3º C.
b.	Reach-In	+35º F./1.7º C.	-10º F./-23.3º C.
c.	Undercounter	+35º F./1.7º C.	-10º F./-23.3º C.
d.	Fabricated	+35º F./1.7º C.	-10º F./-23.3º C.
e.	Cold Pans	+0º F./-17.8º C.	
f.	Work Rooms	+50º F./10º C.	

5. Provide (including payment if subcontracted) all electrical and refrigeration components needed by the completed system and complete (or have completed by the respective trades) all connections of and to said components.
6. An evaporator coil defrost system shall be provided and installed by the K.E.C. on all refrigeration systems designed to operate at an evaporator coil temperature of less than +35º F. Evaporator coil units provided without electric defrost feature shall be installed with a solenoid valve in the liquid line, controlled by the time clock so as to shut off the flow of refrigerant and allow the compressor to pump down and shut off by activation of the pressure control switch.
7. Verify the requirements of and provide any or all additional refrigeration specialty(s) or component(s) required or recommended by the manufacturer for proper operation under the specific operating conditions and location of each system specified.
8. Verify and provide manufacturer's certification that the equipment selection hereinafter specified for each refrigeration system is properly sized and shall meet the operating requirements set forth for each system regarding maintaining specified operating temperature, hours of compressor running time, and system pressures and velocities as recommended by the equipment manufacturer(s).
9. All refrigeration systems shall be installed and wired in strict conformance with the manufacturer's instructions and recommendations.

B. Motors and Heating Elements:

1. Motors up to and including 1/2 HP shall be wired for 120 volt, single phase service. Motors larger than 1/2 HP shall be wired for 208 volt, single or three phase service as indicated. Motors shall be of the drip-proof, splash-proof, or totally enclosed type, having a continuous duty cycle and ball bearings, except small timing motors which may have sleeve bearings. All motors shall have windings impregnated to resist moisture. Motors located where subject to deposits of dust, lint, or other similar matter shall be of the totally enclosed type. Motors shall have ample power to operate the machines for which designated under full load operating conditions without exceeding their nameplate ratings. Insulation shall be N.E.M.A. Class B or better.
2. Heating elements having a connected load up to and including 1,000 watts shall be wired for 120 or 208 volt, single phase service, or as indicated on the drawings.

    a. Any heating element larger than 1,000 watts or any combination of elements in one fixture totaling more than 1,000 watts shall be wired for 208 volt single or three phase service, as indicated on the drawings.
    b. Fixtures having multiple heating elements may be wired for three phase service with the load balanced as equally as possible within the fixture.

C. Switches and Controls:

1. Provide recognized commercial grade signals, "on-off" pushbuttons or switches, and other speed and temperature controls as required for operation of each item, complete with pilot lights and permanent graphics, conspicuously labeled, to assist the user of each item.
2. Mount switches and controls directly adjacent the piece of equipment for which it involves, on operator's side of counter body apron, out of view to the public.
3. Provide on or for each motor-driven appliance or electrical heating or control unit, a suitable control switch or starter of the proper type and rating and in accordance with Underwriter's Code wherever such equipment is not built in. All other line switches, safety cut-outs, control panels, fuse boxes, other control fittings and connections, when not an integral part of the unit or furnished loose by the manufacturer will be furnished and installed by the Electrical Contractor, unless otherwise specified. All electrical controls, switches, or devices provided loose for field installation as a part of the item specified shall be installed in the field by the Contractor unless otherwise specified.
4. Appliances shall be furnished complete with motors, driving mechanisms, starters, and controllers, including master switches, timers, cut-outs, reversing mechanisms, and other electrical equipment if and as applicable.

D. Cover Plates:

1. All controls mounted on vertical surfaces of fixtures shall be set into recessed die stamped stainless steel cups, or mounted onto removable cover plates in such a fashion as to not protrude or interfere with the operation of each item.
2. Cover plates shall be furnished and installed for all electrical outlets, receptacles, switches and controls furnished by the K.E.C., and shall match the material and finish of the equipment to which they will be fastened.

E. Wiring and Conduit:

1. Wiring shall be properly protected in N.E.M.A. and U.L. approved metal enclosures. Only rigid steel conduit shall be used, zinc coated where unexposed and chrome plated where exposed. All wiring shall be run concealed wherever possible.
2. All equipment furnished under this contract shall be so wired, wound, or constructed so as to conform with the electrical characteristics at the job site.
3. Wiring and connection diagrams shall be furnished with electrically operated machines and for all electrically wired fabricated equipment.

4. Furnish all foodservice equipment completely wired internally using wire and conduit suitable for a wet location. Where an Electrician's services are required, the work shall be done in the K.E.C.'s factory or at his expense at the job site at no additional cost to the Owner. Provide all electrical outlets and receptacles required to be mounted on or in fabricated equipment and interconnect to a master circuit breaker panel with all wires neatly tagged showing item number, voltage characteristics, and load information. Final connection shall be made by the Electrical Contractor.

F. Cords, Plugs, and Receptacles:

1. The Electrical Contractor shall provide three- or four-wire, grounding-type receptacles for all wall and floor mounted outlets to be used for plug-in equipment with characteristics as noted on the drawings. Provide Hubbell three-wire or four-wire grounding-type connectors and neoprene cords installed on each item of plug-in equipment, as indicated on drawings and item specifications.
2. K.E.C. shall coordinate with the Electrical Contractor so that the receptacles provided will match the specific plugs provided as part of the plug-in equipment. Any changes in cords and plugs required in the field due to lack of coordination between the Electrical Contractor and the K.E.C. shall be the latter's responsibility.
3. Reduce the length of all cords furnished with the specified equipment to a suitable or appropriate length so they do not interfere with other equipment or operations.
4. Pedestal receptacles that are part of fabricated equipment exposed to view, shall be similar to T&S Model #B-1508DD single face, single gang or Model #B-1528DD single face, double gang.

G. Water Inlets:

1. Water inlets shall be located above the positive water level wherever possible to prevent siphoning of liquids into the water supply system. Wherever conditions shall require a submerged inlet, a suitable type of check valve (except in jurisdictions where check valves are prohibited) and vacuum breaker shall be placed on the fixture to form a part of same to prevent siphoning. Where exposed to view, piping and fittings shall be chrome-plated.

H. Drain Lines:

1. Plumbing Contractor shall provide and install indirect waste lines from equipment which will discharge into floor drains or safe wastes in accordance with Plumbing Rough-In Plans, chrome-plated where exposed. Extend to a point at least 1" (or as required by local codes) above the rim of the floor drain, cut bottom on 45º angle and secure in position.
2. All horizontal piping lines shall be run at the highest possible elevation and not less than 6" above finished floor, through equipment where possible.
3. No exposed piping in or around fixtures or in other conspicuous places shall show tool marks of more than one thread at the fitting.
4. All steam operating valves on or in fabricated and purchased foodservice equipment shall be provided with composition hand wheels, which shall remain reasonably cool in service.
5. Provide suitable pressure regulating valves for all equipment with such components that might reasonably be expected to be affected over a period of time by adverse pressure conditions.

I. Faucets, Valves and Fittings:

1. All sinks shall be fitted with chromium plated, swing spout faucets of same manufacturer throughout as follows, or otherwise specified in Item Specifications.

   a. Prep and Utility Sinks:
      1.) Splash-Mounted:
         a.) T&S Brass and Bronze Works, Inc., Model #B-231.
         b.) Fisher Manufacturing Company, Model #3253.
      2.) Deck-Mounted:

a.) T&S Brass and Bronze Works, Inc., Model #B-221.
b.) Fisher Manufacturing Company, Model #3313.

b. Pot Sinks:
1.) Splash-Mounted:
a.) T&S Brass and Bronze Works, Inc., Model #B-290.
b.) Fisher Manufacturing Company, Model #5214.

2. Pre-Rinse Assemblies:

a. Splash-Mounted:
1.) T&S Brass and Bronze Works, Inc., Model #B-133 with #B-109 wall bracket.
2.) Fisher Manufacturing Company, Model #2210 with #2902-12 wall bracket.

b. Deck-Mounted:
1.) T&S Brass and Bronze Works, Inc., Model #B-143 with #B-510 mixing valve and #B-109 wall bracket.
2.) Fisher Manufacturing Company, Model #2810 with #2805-CV mixing valve and #2902-12 wall bracket.

3. Vacuum Breakers:

a. General Use:
1.) Fisher Manufacturing Company, Model #3990-8000.

b. Disposers:
1.) Splash-Mounted:
a.) T&S Brass and Bronze Works, Inc., Model #B-455.
b.) Fisher Manufacturing Company, Model #3990.
2.) Deck-Mounted:
a.) T&S Brass and Bronze Works, Inc., Model #B-456.
b.) Fisher Manufacturing Company, Model #3991.

4. Trough Inlets:

a. Fisher Manufacturing Company, Model No. #2905.

5. Other specialty faucets, pre-rinse assemblies, vacuum breakers, and trough inlets, as specified under Item Specifications.
6. All sink compartments shall be fitted with 2" NPT male, chrome-plated, brass rotary waste valves complete with overflow assemblies and stainless steel strainers.

a. Prep and General Utility Sinks:
1.) Fisher Manufacturing Company, Model #6100.

b. Pot Sinks:
1.) Fisher Manufacturing Company, Model #6102.

7. Refer to Division 22 for all other fittings.

J. Metals and Alloys:

1. Stainless steel sheets shall conform to ASTM 240, Type 302, Condition A, 18-8, of U.S. Standard Gauges as previously indicated under paragraph 2.1.E.

a. All exposed surfaces shall have a No. 4 finish. A No. 2B finish shall be acceptable on surfaces of equipment not exposed to view.
b. All sheets shall be uniform throughout in color, finish, and appearance.
c. Rolled shapes shall be of cold rolled type conforming to ASTM A36.

2. Stainless steel tubing and pipe shall be Type 304, 18-8, having a No. 4 finish, and shall conform to either ASTM A213 if seamless or ASTM A249 if welded.
3. Where galvanized metal is specified, it shall be copper-bearing galvanized iron, cold-rolled, stretcher leveled, bonderized, re-rolled to insure a smooth surface, and used in the largest possible sizes with as few joints as necessary.
4. Galvanizing shall be applied to rolled shapes in conformance with ASTM A123, and to sheets in conformance with ASTM A526, coating designation G-90.

K. Castings:

1. Castings shall consist of corrosion resisting metal (white metal) containing not less than 30% nickel. All castings shall be rough ground, polished, and buffed to bright lustre and free from pit marks, runs, checks, burrs, and other imperfections. In lieu of corrosion resisting metal castings, die-stamped or cast 18-8 stainless steel will be acceptable.

L. Hardware and Casters:

1. All hardware shall be of heavy duty type, satin finished chromium plated brass, cast or forged or highlighted stainless steel of uniform design. All hardware shall be a well-known brand, and shall be identified by the manufacturer's name and model number for easy replacement of broken or worn parts.
2. Casters on custom-built equipment shall be heavy duty type, ball bearing, solid or disc wheel, with grease-proof rubber, neoprene, or polyurethane tire. Wheel shall be 5" diameter, minimum width of tread 1-3/16", minimum capacity per caster 250 pounds, unless otherwise noted.

a. Solid material wheels are to be provided with stainless steel rotating wheel guard.
b. All casters shall have sealed wheel and swivel bearings, polished plated finish and be N.S.F. approved.
c. All equipment specified with casters shall have a minimum of two (2) with brakes installed on opposite corners, unless otherwise noted.

M. Locks:

1. When specified, doors and drawers of all custom fabricated or manufactured equipment shall be provided with cylinder locks, disc tumbler type with stainless steel faceplate as manufactured by Standard-Keil Mfg. Co., or approved equal.

a. Provide two (2) sets of keys for each lock.
b. All locks shall be keyed alike, except at cashiers stations or unless otherwise specified.

N. Thermometers:

1. All fabricated refrigerated compartments shall be fitted with exterior mounted, adjustable, dial or digital thermometers with flush bezels, and shall be calibrated after installation.

O. Sealants:

1. Sealant, wherever required, shall conform to ASTM C 920; Type S Grade NS, Class 25, Use Nt, with characteristics that when fully cured and washed meets requirements of Food and Drug

Administration Regulation 21 CFR 177.2600 and N.S.F. RTV-732 for use in areas where it comes in contact with food.

2. Dow-Corning #780 or General Electric "Silastic", or approved equal, in either clear or approved color to match surrounding surfaces and applied in accordance with sealant manufacturers recommendations for a smooth, sealed finish.

2.3 FABRICATION AND MANUFACTURE

A. Materials and Workmanship:

1. Unless otherwise specified or shown on drawings, all materials shall be new, of best quality, perfect, and without flaws. Material shall be delivered and maintained on the job in an undamaged condition.
2. Fabrication shall be equal to the standards of manufacture used by all first class equipment manufacturers, performed by qualified, efficient, and skilled mechanics of the trades involved.
3. All items of standard equipment shall be the latest model at time of delivery.
4. All fabricated work shall be the product of one manufacturer of uniform design and finish.
5. Each fabricated item of equipment shall include all necessary reinforcing, bracing, and welding with the proper number and spacing of uprights and cross members for strength.
6. Wherever standard sheet sizes will permit, the tops of all tables, shelves, exterior panels of cabinet type fixtures, and all doors and drainboards shall be constructed of a single sheet of metal.
7. Except where required to be removable, all flat surfaces shall be secured to vertical and horizontal bracing members by welding or other approved means to eliminate all buckle, warp, rattle, and wobble. All equipment not braced in a rigid manner and which is subject to rattle and wobble shall be unacceptable, and the K.E.C. shall add additional bracing in an approved manner to achieve acceptance.

B. Sanitary Construction:

1. All fabricated equipment shall be constructed in strict compliance with the standards of the National Sanitation Foundation as outlined in their Bulletin on Food Service Equipment entitled "Standard No. 2" dated October 1952, and in compliance with the local and State Public Health Regulations in which the installation will occur.
2. All fabricated equipment shall bear the N.S.F. "Seal of Approval".

C. Construction Methods:

1. Welding:

a. All welding shall be the heliarc method with welding rod of the same composition as the sheets or parts welded. Welds shall be complete, strong, and ductile with excess metal ground off and joints finished smooth to match adjoining surfaces; free of mechanical imperfections such as gas holes, pits, cracks, etc., and shall be continuously welded so that the fixtures shall appear as one-piece construction. Butt welds made by spot solder and finished by grinding shall not be acceptable.
b. Spot welds shall have a maximum spacing of 3". Tack welds shall be of at least 1/4" length, and spaced no greater than 4" from center to center. Weld spacing at the ends of the channel battens shall not exceed 2" centers.
c. In no case shall soldering be considered as a replacement for welding, nor shall any soldering operation be done where dependence is placed on stability and strength of the joint.
d. Fixtures shall be shop fabricated of one piece and shipped to the job completely assembled wherever possible. Equipment too large to transport or enter the building in one piece shall be constructed so that the field joints can be welded at the job site.
e. All exposed joints shall be ground flush with adjoining material and finished to harmonize therewith. Whenever material has been sunk or depressed by welding operation, depression

shall be suitably hammered and peened flush with the adjoining surface and ground to eliminate low spots. In all cases the grain of rough grinding shall be removed by successive fine polishing operations.

f. All unexposed welded joints on undershelves of tables or counters of stainless steel shall be suitably coated at the factory with an approved metallic-based paint.

g. After galvanized steel members have been welded, all welds and areas where galvanizing has been damaged shall have a zinc dust coating applied in conformance with Military Specification Number MIL-P-26915.

2. Joints:

a. Butt joints and contact joints wherever they occur, shall be close fitting and shall not require a filler. Wherever break bends occur, they shall be free of undue extrudence and shall not be flaky, scaly, or cracked in appearance; where such breaks do mar the uniform surface appearance of the material, all such marks shall be removed by suitable grinding, polishing, and finishing. Wherever sheared edges occur, they shall be free of burrs, fins, and irregular projections and shall be finished to obviate all danger of laceration when the hand is drawn over them. In no case shall overlapping materials be acceptable where miters or bullnosed edges occur.

b. Field welded joints shall be ground smooth without dips and irregularities and finished to match original finish.

3. Bolt, Screw and Rivet Construction:

a. All exposed surfaces shall be free from bolt and screw heads. When bolts are required, they shall be of the concealed type and be of similar composition as the metal to which they are applied.

b. Where bolt or screw threads on the interior of fixtures are visible or may come into contact with hands or wiping cloths, they shall be capped with a stainless steel or chrome acorn nut and stainless steel lock washer.

c. If rivets are used to fasten rear paneling to the body of the fixture, such rivets shall be stainless steel. In no case shall iron rivets be used.

4. Sound Deadening:

a. Schnee Butyl-Sealant 1/2" wide rope continuously between all frame members and underside of stainless steel table tops, overshelves and undershelves.

b. Tighten stud bolts for maximum compression of sealant.

5. Hi-Liting:

a. All horizontal edges of stainless steel tops, splashes, tops of raised rolled rims, and edges of all exposed doors, handles and shelf edges shall be hi-lited, in uniform design by grinding with abrasive not coarser than #240 grit, then polishing with compound to a uniform mirror finish.

6. Polishing:

a. The grain of polishing shall run in the same direction on all horizontal and on all vertical surfaces of each item of fabricated equipment except in the case where the finish of the horizontal sections of each shall terminate in a mitered edge.

b. Where sinks and adjacent drainboards are equipped with backsplash, the grain of the polishing shall be consistent in direction throughout the length of the backsplash and sink compartment.

7. Finishes:

a. Paint and coatings shall be of an N.S.F. approved type suitable for use in conjunction with foodservice equipment. Such paint or coating shall be durable, non-toxic, non-dusting, non-flaking and mildew resistant, shall comply with all governing regulations, and shall be applied in accordance with the manufacturers recommendations.
b. All exterior, galvanized parts, exposed members of framework, and wrought steel pipe where specified to be painted shall be cleaned, primed with rust inhibiting primer, de-greased, and finished with two (2) coats of glossy enamel grey hammertone paint, unless otherwise noted.
c. Where baked enamel finishes are specified, they shall be oven baked on the fixtures for a minimum of 1-1/2 hours at a minimum temperature of 300º F.
d. Fabricated equipment shall be spray coated with plastic suitable for protecting the equipment during transport and installation. The coating shall be easily removable after the equipment installation is complete at the job site, and final clean-up has begun.

D. Construction:

1. Legs:

a. All tubular stands for open base tables, sinks, or dishtables shall have legs constructed of 1-5/8" O.D. stainless steel tubing, with 1-1/4" O.D., #16 gauge stainless steel crossbracing running between legs at a point 10" above finished floor.
b. All joints between legs and crossbracing shall be welded and ground smooth, full 360º.
c. The top end of legs shall be closely fitted into fully-enclosed stainless steel conical gussets no less than 3" high, similar to Klein #481-58 or #483-58, or approved equal.
d. Gussets shall be fully welded to framing reinforcing members, so that, set screw is not visible from front.
e. Legs without crossrails will not be accepted.
f. Legs shall be spaced at not more than 5'-6" on centers, unless otherwise specified.

2. Feet:

a. All tubular legs will be swedged for appearance and close fit to United Show Case #BF-158, or approved equal, fully enclosed, stainless steel bullet-shaped foot.
   1.) The foot shall be threaded into a collar and completely welded inside the tubular leg to permit a maximum adjustment of 2" without any thread exposure.
   2.) Threads shall be National Course Series Class 2 fit or better, machined to prevent end play when foot is at maximum adjustment.
   3.) The bullet-shaped foot shall have slightly rounded bottom to protect the floor, and a minimum bearing surface of 3/4" diameter of stainless steel-to-floor contact.
   4.) Bottom of tubular leg shall be finished off smoothly to provide a sanitary fitting and prevent the accumulation of grease or other debris.

b. Cabinet type fixtures shall be mounted on 8" high die-stamped, sanitary, two-piece stainless steel legs no less than 2-3/4" in diameter at the top, Component Hardware #A72-0811, or approved equal.
   1.) The bottom fully enclosed, stainless steel, bullet-shaped foot threads up into the inside of the upper member, with a male threaded 5/8" bushing to permit maximum adjustment of 2" without thread exposure.
   2.) The upper section shall be stamped in a neat design with a flared inverted shoulder and fully welded to a base plate designed for anchoring to the channel underbracing.

3. Table Tops:

a. Tables shall be constructed of stainless steel, and of a thickness not less than #14 gauge with 1-3/4" by 120º rolled edges, or as otherwise specified and detailed.
b. All corners shall be bull-nosed and of the same radius as rolled edges.
c. Joints where required shall be butt-welded and ground smooth to present a uniform one-piece appearance.
d. All tops shall be reinforced on the underside with a fully welded framework of 1-1/2"x1-1/2"x1/8" galvanized steel angles with the framing extending around the top perimeter and crossbraced on 24" maximum centers.
e. 1"x4"x1" galvanized or stainless steel, fully welded, cross channel, closed end members placed at each pair of legs with one (1) channel running lengthwise will also be acceptable.
f. All tops shall be reinforced so that there will be no noticeable deflection.
g. Metal tops where adjacent to walls or other items of equipment, shall be constructed with integral, coved, back and/or endsplashes as required and specified in accordance with the standard details contained herein. Close all ends of splashes.

4. Enclosed Bases:

a. All enclosed bases or cabinet bodies shall be of seamless #18 gauge stainless steel construction, enclosed on the ends and sides as required and called for under each item.
b. Ends of body shall terminate at front or operator's side in a 2" wide mullion, vertical, and completely enclosed. All intermediate mullions shall be completely enclosed.
c. The bases shall be reinforced at the top with a framework of 1-1/2"x1-1/2"x1/8" galvanized angles, with all corners mitered and welded solid.
d. Underside of top shall be reinforced with channels and gussets where necessary. Additional angles and cross members shall be provided to reinforce shelves and support tops under heavy tabletop equipment.
e. Where sinks or other drop-in equipment occur, provide additional reinforcing extending crosswise, both sides of opening.
f. In the case of fixtures fitting against or between walls, the bodies shall be set in 1" or 2" from the wall line, with the tops continuing to the wall line with integral, coved splashes as specified. Extend vertical face of body to the wall line only. This will permit adjustment to wall irregularities. Vertical trim strips will not be accepted.
g. Bodies shall be fitted with counter style stainless steel legs as hereinbefore specified.

5. Drawers:

a. Drawers, where specified, shall have removable pan inserts of #18 gauge stainless steel, and shall be approximately 20"x20"x5" deep unless otherwise specified.
   1.) Perimeter top edge shall be flanged out 1/2".
   2.) All interior horizontal corners shall be rounded on a 1" radius, and all interior vertical corners shall be rounded on a 2" radius.

b. Fronts shall be double pan #16 gauge stainless steel construction, 1" thick, insulated with a semi-rigid, fiberglass board, un-faced, having a three-pound density.
   1.) The top of the drawer face shall be formed as an integral pull by breaking the front pan back on a 45º angle 1", then straight up 1", back to front 1", and then down at the front 3/4".
   2.) Drawer front shall have all edges and corners ground smooth with a radius edge pull.

c. The drawer shall have an all welded frame of 1"x1", #16 gauge stainless steel angles sized to fit the removable pan insert.
d. Drawers shall operate on #12 gauge slides with roller bearings with hardened and ground raceways, Grant, Model #3320, or approved equal. Slides shall be pitched approximately 3/8" per foot to permit self-closing action.

e. Drawers shall be adequately and neatly fitted to the guides to permit easy operation without rattle or binding.
f. Slides and frame shall be reinforced to support a dead weight of 150 pounds when drawer is fully extended.
g. Adjustable stops shall be provided for each drawer at the fully-opened position, and be readily lift-able by hand for easy removal of drawer.
h. All drawers not mounted inside a cabinet body shall be completely enclosed in an #18 gauge stainless steel box-type enclosure and suspended from angle framing under the fixture top. The housing bottom shall be flanged and welded to an #18 gauge stainless steel reinforcing channel extending across the open end.

6. Sliding Doors:

a. Sliding doors shall be of the double pan type, with the exterior pan constructed of &2#18 gauge stainless steel with all four sides channeled and corners welded. The interior pan shall be similarly constructed of #20 gauge stainless steel, set into the exterior pan, and welded in place.
b. All doors shall be insulated with semi-rigid fiberglass board, un-faced, having a three-pound density. Styrofoam shall not be acceptable.
c. Doors 18" wide or greater, shall have internally welded 4" wide reinforcing channels to prevent warpage.
d. Each door shall be fitted with a positive flush-type stainless steel pull, Standard-Kiel #1262-1014-1283 recessed handle, or approved equal.
e. In the back of each door install a 1"x1", #16 gauge stainless steel angle stop welded in a suitable location to prevent the doors from overpassing the flush pulls.
f. Doors in the closed position shall overlap each other by no more than 2".
g. Each door shall be fitted with two (2), 1-3/8" ball bearing sheaves fastened to 1"x1/8" stainless steel bar stock welded to the top corners of each door for suspending on an overhead #16 gauge stainless steel channel track. The hangers shall be tapped for 1/4"-20 thumb screw vertical locks which prevent the doors from jumping the track in operation while permitting easy removal for cleaning without tools.
h. Insure that the bottom of the doors are positively and continuously guided to assure proper alignment and passing regardless of the position of each door.
i. Provide hard rubber bumpers for doors to close against to insure quiet operation.

7. Hinged Doors:

a. Hinged doors shall be of the same materials and construction as sliding doors previously specified.
b. Hinges shall be heavy duty, stainless steel, removable type, and fastened by tapping into 1/4"x3/4" stainless steel bar stock inside the door pan and behind the door jamb.
c. The door face shall be flush with the cabinet body when fully closed.
d. Size widths of doors equally when installed in pairs, or in series with other pairs, with no door being greater than 36" in width.
e. Doors shall be held closed by permanent magnetic closure devices of an approved type and of sufficient strength to hold the doors shut. Install two (2) per door (minimum), mounted to the door jamb, top and bottom, with opposing chrome-plated steel plates securely fastened to the inner panel of the doors.

8. Undershelves:

a. All open base tables shall be provided with full-length undershelves of #16 gauge stainless steel fully welded to legs with all joints ground smooth and polished.
b. Front edge shall turn down 1-1/2" and under 1/2".
c. Turn up rear and ends 2", with integral coved radius, when specified.

d. If required by width, provide 1-1/2"x1-1/2"x1/8" galvanized angle bracing mounted to underside, full length.

9. Interior Shelves:

a. All interior shelves within cabinet bodies, enclosed bases and overhead cabinets, shall be of #16 gauge stainless steel.
b. Removable shelves shall be constructed in equal sections, and rest in 1-1/2"x1-1/2"x1/8" stainless steel angle frame. Cove all horizontal corners in accordance with N.S.F. requirements.
c. Stationary shelves shall have 2" turn-up on back and ends, and continuously welded to cabinet body, polished and ground smooth to form a one-piece interior free of any crevices.
d. Front edge shall turn down 1-1/2" and under 1/2", and finished with "z" bar forming completely enclosed edge for maximum strength and sanitation.
e. Provide 1-1/2"x1-1/2"x1/8" angle bracing mounted to underside, full length.

10. Elevated Shelves:

a. Shelves over equipment not adjacent to a wall shall be mounted on 1" diameter #16 gauge stainless steel tubular standards neatly fitted with stainless steel base flanges, unless otherwise specified.
b. The top of the tubular standards shall be completely welded to #14 gauge stainless steel support channels, full width of overshelf.
c. Inside the tubular standard, and welded to same, provide 1/2" diameter steel tension rod extended through countertop and securely anchored to lower framework reinforcing with nuts and lock washers in such a manner as to assure a stable, sway-free structure.
d. If required by width, provide 1-1/2"x1-1/2"x1/8" stainless steel angle bracing mounted to underside, full length.
e. Cantilevered shelves, when called for, shall be #16 gauge stainless steel supported on #14 gauge stainless steel brackets welded to 1-5/8" O.D. stainless steel tubular standards extending through the backsplash, and fully welded to the table framework. Provide Klein #481-SH welded sleeves where standards penetrate backsplash.

11. Wall Shelves:

a. Open wall shelves shall be constructed of #16 gauge stainless steel with back and ends turned up 2", positioned 2" out from face of wall, with all corners welded, and supported on #14 gauge stainless steel brackets.
b. Brackets shall be flanged inward beneath the shelf and at the wall 1-1/2" with intersecting flanges completely welded, and attached to shelf with studs welded to the underside and bolted with stainless steel lock washers and chrome-plated cap nuts.
c. Each bracket shall be fastened to the wall with a minimum of two (2) 1/4"-20 stainless steel bolts anchored securely by means of toggles or expansion shields.

12. Sinks:

a. All sinks shall be the size and shape as shown on drawings, and constructed of #14 gauge stainless steel with backs, bottoms and fronts formed of one continuous sheet and the ends welded in place.
b. Sinks shall have all corners, both vertical and horizontal, coved on a 3/4" radius electrically welded, ground smooth and polished. Solder in filleted corners will not be acceptable.
c. Multiple compartment sinks shall be divided with double wall, #14 gauge stainless steel partitions with a 1/2" radius on top and all corners rounded as other corners, continuously welded, ground smooth and polished.
d. The bottom of each compartment shall be creased to a die stamped recess, tapered and shaped to receive a lever type waste without the use of solder, rivets, or welding.

e. Provide #14 gauge stainless steel waste lever angle bracket mounted to underside of compartment at front.
f. The front and exposed ends of sinks shall be fabricated with a 1-1/2", 180º rolled edge. The back and ends adjacent to walls or other fixtures shall be turned up with integral coved edge 12" high and returned 2-1/2" at the top on a 45º angle. Cap ends of all exposed splashes.
g. Unless otherwise specified, two (2) faucet holes on 8" centers shall be provided, located over the center line of partitions between compartments, 2-1/2" down from splash break.
h. Gussets for legs shall be fully welded all around to #12 gauge stainless steel triangular plates fully welded to underside of sink.
i. Sinks fabricated into working surfaces shall be constructed of the same material and in like manner to sinks specified above, except rolled edge and backsplash shall be omitted and the bowl shall be completely welded integral and flush with the working surface. Where basket type wastes are called for, they shall be fitted with removable seats.
j. Where sink bowls are exposed, the exterior shall also be polished to a #4 finish.

13. Sink Drainboards:

a. Drainboards shall be constructed of the same material as the sinks and shall be welded integral to same.
b. The front portion of drainboards shall continue the 1-1/2", 180º rolled edge of sink bowls on a continuous and level horizontal plane.
c. The surface of the drainboard shall pitch from 2-1/2" at the end furthest from the sink, to 3" at the bowl; or 1/8" per foot. In addition, the bottom surface shall be dished toward the center for complete drainage.
d. The backsplash of the drainboard shall match the rear of the sink contour and shall be welded integral thereto, running parallel to the floor.
e. Drainboards shall be reinforced on the underside with a framework of 1"x4"x1" stainless steel channel underbracing placed at each pair of legs, with exposed ends capped, and one (1) channel running lengthwise.
f. Where disposer cones are fabricated into drainboards, additional 1"x4"x1" stainless steel channels shall be welded into the top framing, spanning the drainboard from front-to-back on both sides of the cone and located not more than 3" to either side.
g. Disposer control panels or switches shall be supported beneath drainboards, when specified, by means of a #12 gauge stainless steel mounting bracket.

14. Dishtable Tops:

a. Dishtables shall be constructed of #14 gauge stainless steel with all corners, both vertical and horizontal, coved on a 3/4" radius electrically welded, ground smooth and polished. Solder in filleted corners will not be acceptable.
b. Fronts and exposed ends shall be fabricated with a 3" high, 1-1/2", 180º rolled edge with rounded corners. The back and ends adjacent to walls or other fixtures shall be turned up with integral coved edge 12" high and returned 2-1/2" at the top on a 45º angle. Cap ends of all exposed splashes.
c. All tops shall slope 1/8" per foot (minimum).
d. Dishtables shall be reinforced on the underside with a framework of 1"x4"x1" stainless steel channel underbracing placed at each pair of legs, with exposed ends capped, and one (1) channel running lengthwise fully welded between front-to-back channels.
e. Where tops fit into dishmachines, they shall turn down and into, forming a sealed watertight fit, and attached according to dishmachine manufacturers instructions.
f. On each side of dishmachine, tables shall be provided with integral splash shields as part of the backsplash.
g. Silicon filling of gaps caused by poor fit will not be acceptable.
h. On corner-type door machines, provide #14 gauge stainless steel wall-mounted, splash panel to protect adjacent wall, full width of door opening.

15. Cafeteria Style Counters:

    a. All counters shall be constructed as previously specified under Enclosed Bases.
    b. Provide top and bottom framing for each counter food pan, cold pan, coffee urn, ice cream unit, ice bin, dish dispenser, etc., whether a drop-in unit or a cutout for a portable unit.
    c. Where plate shelves occur, frame horizontally 8-1/2" back from counter edge or as design dictates, and at bottom of shelf at counteredge.
    d. The countertop shall be constructed of #14 gauge stainless steel, as previously specified, with all joints welded, ground and polished.
    e. Fronts and exposed ends shall be stainless steel, plastic laminate or other material as noted in the Item Specifications.
    f. All display glass shelving shall be 1/4" polished plate glass and fully trimmed with #18 gauge stainless steel formed channels. Top shelves shall be the same width as the shelf below. Shelves shall be supported on 5/8" square, #16 gauge stainless steel perimeter tubing fully welded to 1-1/4" square, #16 gauge stainless steel tubing uprights.
    g. Provide appropriate adjustable glass sneeze or breath guards trimmed in stainless steel along front, entire length, mounted in Klein 4465-A brackets.
    h. Protector shelf over hot food wells shall be #16 gauge stainless steel supported on 1-1/4" square, #16 gauge stainless steel tubing uprights, with 1/4" polished plate glass front and end panels trimmed in #18 gauge stainless steel channels. When specified for self-service, mount bottom edge of front panel 8" above countertop.
    i. All display and protector shelves shall be furnished with full-length fluorescent lights wired to on/off switch in counter apron, with lamps and protective shields. Conceal all wiring in tubular uprights.
    j. Refer to Item Specification for changes, as required.
    k. Counter shall be internally wired complete by the K.E.C., and in such a way as to meet the requirements of the Electrical Code of the job location.

2.4 EQUIPMENT

A. All items listed on the Contract Documents under the heading "Equipment Schedule" shall be furnished in strict accordance with the foregoing specifications and with the following detailed Itemized Specifications.

B. Manufacturer's names and model numbers are shown establishing quality, size, and finish required, representing the Owner's and Consultant's requirements and basis for bid. Equipment is listed hereinafter with same item numbers as shown on Contract Documents.

PART 3 - EXECUTION

3.1 INSPECTION

A. Before beginning the installation of foodservice equipment, the spaces and existing conditions shall be examined by the K.E.C. and any deficiencies, discrepancies, or unsatisfactory conditions for proper installation of foodservice equipment shall be reported to the Architect in writing.

    1. Do not proceed with installation until unsatisfactory conditions have been corrected in a manner satisfactory to the installer.
    2. Beginning installation shall constitute acceptance of the area.

3.2 PREPARATION

A. Foodservice equipment drawings are diagrammatic and intended to show layout, arrangement, mechanical and electrical requirements.

B. Field verify all measurements at the building prior to fabrication of custom equipment. Coordinate measurements and dimensions with rough-in and space requirements.

3.3 INSTALLATION

A. The K.E.C. shall coordinate his delivery schedule with the Contractor to ensure adequate openings in the building to receive the equipment.

B. Equipment shall be un-crated, fully assembled and set level in position for final connections. Parts shipped loose but required for connection shall be properly tagged and shall be accompanied by the necessary installation instructions.

C. Provide a competent, experienced foreman to supervise installation and final connections with other trades.

D. Remote Refrigeration Systems:

1. All refrigeration work where applicable to this contract shall be accomplished in an approved manner, using finest quality fittings, controls, valves, etc.
2. Refrigeration items shall be started up, tested, adjusted, and turned over to the Owner in first class condition and left running in accordance with the manufacturer's instructions.
3. Refrigeration lines and hook-ups shall be completed by the K.E.C. with the exception of electric, water, and drain line final connections unless otherwise specified.
4. All copper tubing shall be refrigerant grade A.C.R. or type "L".
5. Silver solder and/or Sil-Fos shall be used for all refrigerant piping. Soft solder is not acceptable.
6. All refrigerant lines in pipe sleeves or conduit shall be effectively caulked at ends to prevent entrance of water or vermin and at penetrations through walls or floors.
7. All tubing shall be securely anchored with clamps, and suspended lines shall be supported with adjustable hangers at 6'-0" o.c. maximum.
8. Wrap drain line in freezer compartment(s) with approved heat-tape for final connection by Electrical Contractor.

E. Sealing and Caulking:

1. Prior to the application of sealant, all surfaces shall be thoroughly cleaned and de-greased.
2. Apply around each unit of permanent installation at all intersections with walls, floors, curbs or other permanent items of equipment.
3. Joints shall be air-tight, water-tight, vermin-proof, and sanitary for cleaning purposes.
4. In general, joints shall be not less than 1/8" wide, with backer rod to shape sealant bead properly at 1/4" depth. Shape exposed surfaces of sealant slightly concave, with edges flush with faces of materials at joint.
5. At internal corner joints, apply sealant or gaskets to form a sanitary cove, of not less than 3/8" radius.
6. Provide sealant-filled joints up to 3/4" in joint width. Trim strips for wider joints shall be set in a bed of sealant and attached with stainless steel fasteners, 48" o.c., or less, to insure suitable fastening and prevent buckling of the metals fastened.

F. Cutting:

1. All cutting, fitting, or patching required during installation shall be accomplished by the K.E.C., at his own expense, so as to make the work conform to the plans and specifications.
2. The K.E.C. shall not cut or otherwise alter, except with the consent of the Owner, the work of any other Contractor.
3. Provide cut-outs in foodservice equipment where required to run plumbing, electric, or steam lines through equipment items for final connections.

3.4 FIELD QUALITY CONTROL

A. Inspection:

1. Provide access to shop fabrication areas during normal working hours to facilitate inspection of the equipment, during construction, by the Architect or his authorized representative.
2. Errors found during these inspections shall be corrected to the extent required within the scope of the plans, specifications, and approved drawings.

B. Start-Up and Testing:

1. Delay start-up of foodservice equipment until service lines have been tested, balanced, and adjusted for pressure, voltage, and similar considerations; and until water and steam lines have been cleaned and treated for sanitation.
2. Before testing, lubricate each equipment item in accordance with manufacturer's recommendations.
3. Supply a trained person or persons who shall start up all equipment, test and make adjustments as necessary, resulting in each item of equipment, including controls and safety devices, performing in accordance with the manufacturer's specifications.
4. All gas-fired equipment shall be checked by the local gas company as to calibration, air adjustments, etc., and adjustments made as required.
5. Repair or replace any equipment found to be defective in its operation, including items which are below capacity or operating with excessive noise or vibration.

C. Demonstration:

1. Provide an operating demonstration of all equipment at a time of Owner's convenience, to be held in the presence of authorized representatives of the Architect and Owner.
2. Demonstration shall be performed by manufacturer's representative knowledgeable in all aspects of his equipment.
3. During the demonstration, instruct the Owner's operating personnel in the proper operation and maintenance of the equipment.
4. Furnish complete, bound, operation/maintenance manuals and certificates of warranty for all items of equipment provided, in accordance with Article 1.5 Submittals, Paragraph F, at this demonstration time.

3.5 ADJUST AND CLEAN

A. Upon completion of installation and tests, clean and sanitize foodservice equipment, and leave in condition ready for use in food service.

B. Remove all protective coverings, and thoroughly clean equipment both internally and externally.

C. Make and check final adjustments required for proper operation of the equipment.

D. Restore finishes marred during installation to remove abrasions, dents, and other damages. Polish stainless steel surfaces, and touch-up painted surfaces with original paint.

E. Clean up all refuse, rubbish, scrap materials, and debris caused by the work of this Section, and put the site in a neat, orderly, and broom-clean condition.

3.6 ITEMIZED EQUIPMENT

ITEM #1: UTILITY CART, MOBILE

QUANTITY:	Two (2)
MANUFACTURER:	Lakeside Manufacturing Company
MODEL NO.:	544 (N058)
PERTINENT DATA:	700-lb. Capacity, Three-Shelf, N.S.F. Model
UTILITIES REQ'D:	----
ALTERNATE MFRS.:	Piper Products

Furnish and set-in-place per Equipment Plan, Sheet K101; Manufacturer's Instructions and the following:

1. All four (4) casters swivel-type, in lieu of two (2) swivel, two (2) fixed.

ITEM #2: WALK-IN COOLER/FREEZER

QUANTITY:	One (1)
MANUFACTURER:	Bally
MODEL NO.:	Outdoor Installation (N058)
PERTINENT DATA:	Freestanding/Thru-Wall, Self -Contained, Class I, 6" Urethane Panel, NSF Construction, With Structural Floor
UTILITIES REQ'D:	1750W, 120V, 1PH; (2) 3/4" IW
ALTERNATE MFRS.:	Master-Bilt, Thermo-Kool; ThermalRite

Furnish and set-in-place per Equipment Plan, Sheet K101; Building Conditions Plan, Sheet K102; Manufacturer's Shop Drawing and the following:

1. Two Section Unit: 25'-0" L x 8'-8½" W x 9'-0" H. Size width of interiors compartments equally.

2. Exterior Finish:
   - -- 26 GA stucco embossed galvanized steel where unexposed.
   - -- 20 GA stucco embossed stainless steel where exposed.

3. Interior Finish:
   - -- White acrylic enamel baked-on .040 stucco embossed aluminum walls.
   - -- White acrylic enamel baked on 26 GA smooth galvanized steel ceiling.

4. Interior Floor:
   - -- 6" prefabricated 12,000 lb./sq. ft. heavy-duty structural floor panels with foamed-in 3/4" plywood reinforcing.
   - -- Resinous flooring material applied over floor panels with integral 6" high perimeter coved base. Application performed by Flooring Contractor

5. Entrance Door:
   - -- Two (2) flush-mounted, self-closing, left-hand hinged doors with 34" x 76" net opening.
   - -- Brushed chrome camlift hinges with lift-off capability. One (1) extra hinge per door, three (3) total.
   - -- Kason #1236 brushed chrome lever-action handle with knob-turn release and cylinder lock.
   - -- Kason #09440004 brushed chrome mortise dead-bolt lock, factory mounted.
   - -- Hydraulic door closer.
   - -- Standard 2" diameter dial indicating thermometer factory mounted, each compartment.
   - -- Pilot light and switch assembly factory mounted in door frame with stainless steel coverplate.
   - -- 36" high aluminum diamond tread kickplates, interior and exterior of door, frame and jamb.
   - -- 14" x 24" heated observation windows, both compartments.

ITEM #2: (Continued)

- -- Kason #1806 LED light fixture with high-impact plastic cover centered over door opening to avoid conflict with shelving, each compartment. Extend wiring in conduit, foamed within door panel header, to junction box mounted on top of walk-in ceiling, each compartment.
- -- Kason #907 interior door handle, factory mounted, with concealed metal backing plate.
- -- Round vinyl door bumper mounted to front exterior face to protect handle from puncturing wall when door in full open position.
- -- Engraved phenolic plastic compartment sign - 12" long x 2" high; white in color with 1" high blue CAPITAL letters mounted on each door above observation window; (1) - COOLER, (1) - FREEZER.
- -- Heavy-duty stainless steel heated threshold, each compartment.

6. Heated pressure relief port in freezer, ceiling mounted.

7. Four (4) Kason #1810L21248LB 48" long twin-tube LED light fixtures with shatter-proof high impact plastic covers centrally-mounted to walk-in ceiling per Detail, Sheet K104; two (2) for the cooler, two (2) for the freezer. Provide low-temperature ballast (-20°F.) in freezer. Shipped loose and installed by K.E.C. Final connection by Electrical Contractor.

8. Modularm Model #75LC recessed flush-mount digital thermometer with audio-visual temperature alarm factory mounted in door frames for both cooler and freezer compartments inter-wired with building monitoring system by Electrical Contractor, as required. Extend temperature probe to rear wall of each compartment.

9. Provide and install trim strips of matching exterior finish between ends of walk-in panels and building walls from finish floor to 6" above finish ceiling; verify finished ceiling height.

10. Provide and install closure panels of matching exterior finish between top of walk-in and finish ceiling per Detail Sheet K102; K.E.C. to verify finished ceiling height.

11. All electrical conduit shall be run concealed above walk-in ceiling, per Detail Sheet K104.

12. Evaporator coil drain lines shall be run to floor drain with "P"-trap on exterior of box by K.E.C. Pitch drain lines 1" per foot of horizontal run.

13. Black flexible "Armaflex" insulation applied to exposed drain lines and fittings within interior of box by K.E.C.

14. Spiral heat tape applied to drain lines within interior of freezer compartment prior to application of insulation by K.E.C. Drain line heating cable shall be installed for continuous 24-hour operation.

15. Coordinate location of sprinkler head drops and provide penetrations, where necessary.

16. Seal and insulate all openings to prevent infiltration of warm air into cooler/freezer compartments.

16. Sloped roof with sloped end panels and vinyl weather roof cap flashed into exterior building wall.

17. Provide level galvanized platform base with flashing to support top-mounted refrigeration systems, Items #3 and #4.

18. Accessories:
    - -- One (1) Mars Air LoPro #LPN36-IU air door curtain factory installed above each door with optional on/off microswitch. Electrical Contractor to provide power receptacle and final connection. Mount fan centered over walk-in door opening and attach to wall panel with thru-bolts.

ITEM #2: (Continued)

19. Quality Inspection Requirement:
    -- Walk-In shall be completely erected at the manufacturer's facility prior to shipment and a quality control inspection performed on the assembled structure. A digital photograph of factory assembled walk-in shall be provided for the K.E.C. permanent records and included in the operation and maintenance manuals.

ITEM #3: COOLER REFRIGERATION SYSTEM

QUANTITY:	One (1)
MANUFACTURER:	Bally Refrigerated Boxes, Inc.
MODEL NO.:	BQHA010E6-HT3A (N058)
PERTINENT DATA:	Quiet Line-Series, Air Cooled, Outdoor Installation, Remote, With KE2 Therm Demand Defrost Controller
UTILITIES REQ'D:	7.0A, 208V, 3PH
ALTERNATE MFRS.:	Master-Bilt; ColdZone

Furnish and install per Equipment Plan, Sheet K101; Manufacturer's Shop Drawing and the following:

1. Condensing Unit: Factory Pre-Assembled, Hermetic, Medium Temperature, R-404A.

2. Mounted on top of walk-in cooler roof.

3. Complete winterization package and condensing unit weatherproof cover.

4. Overall size: 48⅛" L x 16⅝" W x 29⅜" H.

5. Weight: 315 lbs.

6. Evaporator Coil with High-Efficiency EC Motors: Low-Profile, End-Mount Type, Model BLP211MA-S1B_ECM; 2.3A, 120V, 1PH
    -- System to operate at +35° F.
    -- KE2 Therm Demand Defrost Electronic Controller with remote monitoring and diagnostics consisting of a microprocessor driven controller, sensors and an optional Electronic Expansion Valve (EEV) factory-installed. Electrical Contractor to field install control wiring between KE2 Therm Controller and Modularm 75LC door monitor. See wiring diagram, Sheet K104.

7. Complete refrigeration system warrantee: five (5) years for the compressor, Two (2) years for the condensing unit, and Two (2) years for all parts of the evaporator coil.

8. Factory installed main-fused disconnect switch.

ITEM #4: FREEZER REFRIGERATION SYSTEM

QUANTITY:	One (1)
MANUFACTURER:	Bally Refrigerated Boxes, Inc.
MODEL NO.:	BQHA030L6-HT3A (N058)
PERTINENT DATA:	Quiet Line-Series, Air Cooled, Outdoor Installation, Remote, With KE2 Therm Demand Defrost Controller
UTILITIES REQ'D:	15.5A, 208V, 3PH
ALTERNATE MFRS.:	Master-Bilt; ColdZone

Furnish and install per Equipment Plan, Sheet K101; Manufacturer's Shop Drawing and the following:

ITEM #4: (Continued)

1. Condensing Unit: Factory Pre-Assembled, Hermetic, Low Temperature, R-404A.

2. Mounted on top of walk-in freezer roof.

3. Complete winterization package and condensing unit weatherproof cover.

4. Overall size: 48⅛" L x 16⅝" W x 29⅜" H.

5. Weight: 330 lbs.

6. Evaporator Coil with High-Efficiency EC Motors: Low-Profile, End-Mount Type, Model BLP211LE-S2B_ECM, 1.4A, 208V, 1PH (Fan); 10.3A, 208V, 1PH (Defrost Heater)
   -- System to operate at -10° F.
   -- KE2 Therm Demand Defrost Electronic Controller with remote monitoring and diagnostics consisting of a microprocessor driven controller, sensors and an optional Electronic Expansion Valve (EEV) factory-installed. Electrical Contractor to field install control wiring between KE2 Therm Controller and Modularm 75LC door monitor. See wiring diagram, Sheet K104.

7. Complete refrigeration system warrantee: five (5) years for the compressor, Two (2) years for the condensing unit, and Two (2) years for all parts of the evaporator coil.

8. Factory installed main-fused disconnect switch.

ITEM #5: SHELVING, MOBILE

QUANTITY:	Fourteen (14)
MANUFACTURER:	InterMetro Industries Corporation
MODEL NO.:	MetroMax i (N058)
PERTINENT DATA:	Four-Tier High, Open-Grid Shelf Mat, Polymer
UTILITIES REQ'D:	----
ALTERNATE MFRS.:	None

Furnish and set-in-place per Equipment Plan, Sheet K101; Manufacturer's Instructions and the following:

Cooler:

1. Five (5) #MX1842G sections; 18" W x 42" L x 4-tier high.

2. Two (2) #MX1848G sections; 18" W x 48" L x 4-tier high.

3. Twenty-eight (28) #MX63UP polymer posts for stem casters, 63" high.

4. Fourteen (14) #5MPX polyurethane swivel casters with bumpers.

5. Fourteen (14) #5MPBX polyurethane swivel casters with brakes and bumpers.

6. Plastic wedge lock connectors, quantity as required.

7. Locate bottom shelf @ 12" A.F.F.; space remaining shelves equally.

Freezer:

1. Five (5) #MX1842G sections; 18" W x 42" L x 4-tier high.

ITEM #5: (Continued)

2. Two (2) #MX1848G sections; 18" W x 48" L x 4-tier high.

3. Twenty-eight (28) #MX63UP polymer posts for stem casters, 63" high.

4. Fourteen (14) #5MPX polyurethane swivel casters with bumpers.

5. Fourteen (14) #5MPBX polyurethane swivel casters with brakes and bumpers.

6. Plastic wedge lock connectors, quantity as required.

7. Locate bottom shelf @ 12" A.F.F.; space remaining shelves equally.

ITEM #6: SHELVING

QUANTITY:	Eighteen (18)
MANUFACTURER:	InterMetro Industries Corporation
MODEL NO.:	Super Erecta (N058)
PERTINENT DATA:	Five-Tier High, Stationary, Free-Standing, Chrome-Plated, Wire
UTILITIES REQ'D:	----
ALTERNATE MFRS.:	None

Furnish and set-in-place per Equipment Plan, Sheet K101; Manufacturer's Instructions and the following:

Dry Storage:

1. One (1) #2130NC section; 21" W x 30" L x 5-tier high.

2. Four (4) #2136NC sections; 21" W x 36" L x 5-tier high.

3. Six (6) #2142NC sections; 21" W x 42" L x 5-tier high.

4. Six (6) #2148NC sections; 21" W x 48" L x 5-tier high.

5. Sixty-eight (68) #74P chrome-plated posts; 74-5/8" high.

6. Plastic split sleeves, quantity as required.

7. Locate bottom shelf @ 12" A.F.F.; space remaining shelves equally.

Soap Storage:

1. One (1) #1436NC section; 14" W x 36" L x 5-tier high.

2. Four (4) #74P chrome-plated posts; 74-5/8" high.

3. Four (4) #9993S stainless steel foot plates.

4. Plastic split sleeves, quantity as required.

5. Locate bottom shelf @ 12" A.F.F.; space remaining shelves equally.

ITEM #7: PREP SINK

QUANTITY: One (1)
MANUFACTURER: Custom Fabricated
MODEL NO: #14 GA Stainless Steel
PERTINENT DATA: 8'-0" Long x 2'-6" Wide x 2'-10" High
UTILITIES REQ'D: 1/2" HW, 1/2" CW, (2) 1-1/2" IW
ALTERNATE MFRS.: None

Fabricate and set-in-place per Equipment Plan, Sheet K101; Fabrication Detail, Sheet K501; and the following:

1. Front and end edge rolls per Detail 1.02B.

2. 13" high backsplash per Detail 1.04A.

3. Framework per Detail 1.05.

4. Legs per Detail 1.07.

5. Stainless steel undershelf on both ends per Detail 1.11.

6. Sound-deaden underside of sinks and drainboards with NSF-approved sound dampening material.

7. Accessories:
   -- One (1) T&S #B-133 pre-rinse spray faucet with #B-156 12" swing-spout add-on faucet, #B-109 wall bracket and backflow preventer.
   -- Two (2) T&S #B-3950-01 twist waste valves with overflow assemblies and #010387-45 basket strainers.

8. Item will remain shrink-wrapped until ready for final connection by Plumbing Contractor. Immediately following completion of final connections, K.E.C. shall re-shrink-wrap tubs or provide removable panel to avoid use by construction trades. Post sign on wall above sink tubs in English and Spanish stating: WARNING! NOT TO BE USED BY CONSTRUCTION TRADES. FAILURE TO COMPLY WILL RESULT IN $500.00 FINE AND ALL COSTS TO REPLACE ITEM WITH NEW.

ITEM #8: ICE MACHINE/BIN

QUANTITY: One (1)
MANUFACTURER: Manitowoc Equipment Works
MODEL NO.: IY-0524A/B-420 (N058)
PERTINENT DATA: Air-Cooled, 485-LB. Maker, 310-LB. Bin, Dice Cube Size
UTILITIES REQ'D: 14.4A, 120V, 1PH; 1/2" CW, 1/2" IW (Maker Drain), 3/4" IW (Bin Drain)
ALTERNATE MFRS.: None

Furnish and set-in-place per Equipment Plan, Sheet K101; Manufacturer's Instructions and the following:

1. Stainless steel exterior finish, ice machine and bin.

2. Accessories:
   -- One (1) Everpure Model EV9324-21 InsurIce i2000² single water filter system with 20" Coarse Filter factory assembled to common wall mounting rack.
   -- 6" high stainless steel leg set with adjustable bullet feet.
   -- Custom fabricated stainless steel ice scoop holder bracket mounted to right-side of bin per Detail, Sheet K501.

ITEM #8: (Continued)

3. Cord and plug with matching receptacle furnished and installed by Electrical Contractor.

ITEM #9: SLICER

QUANTITY:	One (1)
MANUFACTURER:	Hobart Corporation
MODEL NO.:	HS9-1 (N058)
PERTINENT DATA:	Automatic, Variable 4-Speed Carriage Drive, 13" Knife
UTILITIES REQ'D:	1/2 HP, 120V, 1PH
ALTERNATE MFRS.:	None

Furnish and set-in-place per Equipment Plan, Sheet K101; Manufacturer's Instructions and the following:

1. Accessories:
   - -- One (1) #HS-FENFUL product fence.
   - -- One (1) #HS-CHUTE food chute.
   - -- One (1) #HS-LEGSET 4½" legs.
   - -- One (1) #HS-TOOL knife removal tool.

2. Cord and plug set.

ITEM #10: SPARE NUMBER

ITEM #11: WORKTABLE

QUANTITY:	One (1)
MANUFACTURER:	Custom Fabricated
MODEL NO.:	#14 GA Stainless Steel
PERTINENT DATA:	10'-0" Long x 2'-6" Wide x 3'-0" High
UTILITIES REQ'D:	----
ALTERNATE MFRS.:	None

Fabricate and set-in-place per Equipment Plan, Sheet K101; Fabrication Detail, Sheet K501 and the following:

1. Perimeter edge rolls per Detail 1.02M.

2. Framework per Detail 1.05.

3. Legs per Detail 1.07.

4. Full-length stainless steel undershelf per Detail 1.11.

5. Two (2) stainless steel drawer assemblies per Detail 1.14, Type I, with locks.

6. Worktable per Detail 2.01.

7. Sound-deaden underside of worktable with NSF-approved sound dampening material.

ITEM #12: ELECTRIC CAN OPENER

QUANTITY:	One (1)
MANUFACTURER:	Edlund Company, Inc.
MODEL NO.:	270 (N058)
PERTINENT DATA:	Countertop, Dual-Speed
UTILITIES REQ'D:	1.5A, 120V, 1PH
ALTERNATE MFRS.:	None

Furnish and set-in-place per Equipment Plan, Sheet K101; Manufacturer's Instructions and the following:

1. Cord and plug set.

ITEM #13: UTILITY RACEWAY

QUANTITY:	One (1)
MANUFACTURER:	Captive-Aire Systems, Inc.
MODEL NO.:	UDI (N058)
PERTINENT DATA:	Island, Modular Type
UTILITIES REQ'D:	40.0A, 120/208V, 3PH; 200.0A, 480V, 3PH; 3/4"HW, 1"CW
ALTERNATE MFRS.:	Caddy, Halton; Gaylord

Furnish and install per Equipment Plan, Sheet K101; Utility Raceway Details, Sheet K503; Manufacturer's Instructions and the following:

1. All components and labor necessary for a complete system manufactured in accordance with NEC latest edition, NEMA, NFPA No. 96 and No. 54, Uniform Plumbing Code, ASME, OSHA using only U.L. Listed certified components.

2. 13'-0" long x 12" wide x 6'-10" high with risers, completely pre-wired and pre-plumbed to one final connection point for electric, hot water and cold water. All connections shall face down on horizontal member.

3. System shall extend up to bottom edge of Ventilator, Item #14.

4. 54" overall height less risers with peaked top.

5. 36" wide x 6'-10" high risers on each end with 2" penetration into ventilator at 6'-8" A.F.F.

6. Entire raceway shall be constructed of #16 gauge Type 304 stainless steel with a #4 mill finish.

7. Removable link plates constructed of #16 gauge stainless steel.

8. Electrical compartment shall be completely enclosed with stainless steel housing accessible by the removal of link plates. Internal electrical feeder shall be cable wireway having balanced load and phases and with connection lugs for main service. Branch circuit wiring for each electrical connection shall be phase identified and sized in accordance with circuit breaker rated capacity. Raceway shall provide electrical, gas and water service for items #16, #17, #18, #19 and #21.

9. Provide 12" long interchangeable 16 gauge stainless steel link connection plate for each electrical connection equipped with individual circuit breaker(s) installed in breaker panel mounted in left-hand riser, and grounding type receptacle with twist-lock feature or pre-wired flexible sealtite conduit.

10. On each connection plate provide U.L. listed GFIC ground fault interrupter circuits and matching power supply cords on each 120-volt single-phase connection.

ITEM #13: (Continued)

11. Hot water and cold water plumbing compartment shall be isolated from electrical compartment. All piping and disconnects in system shall be color coded.

12. Provide fire/fuel shut-off for electric equipment per NFPA No. 96. System shall require one final connection by Contractor from fire protection system.

13. All hot and cold water piping, including individual branch pipe connection, shall be hard temper type "L" copper tubing with copper sweat type solder fittings. At each individual connection, provide A.G.A approved flexible hose(s) with two wall brass and stainless steel construction with quick-disconnect fittings.

14. Provide matching cord sets for all electric equipment, eight (8) total.

15. Neoprene bumper strips, full length.

16. Refer to Division 23 & 26 for Ventilator control devices.

17. Accessories:
    -- Three (3) Everpure #EV9797-22 KleenSteam II water filter systems factory-installed and housed within right-hand riser. Provide one (1) independent pre-piped water line to service point for Item #16: Hydrovection Oven and Item #18: Convection Steamer. Fabricate 18"x18" lexan viewport in riser panel to monitor pressure gauge and filter bowl.

18. Fabricated in four (4) sections, assembled in field to present integral one-piece appearance.

19. Main electrical shunt-type circuit breakers mounted in left-hand riser for 40.0A, 120/208V, 3PH and 200.0A, 480V, 3PH services.

20. Factory supervision of installation and start-up.

21. Raceway shall be of same manufacturer as Ventilator, Item #14

ITEM #14: VENTILATOR

QUANTITY:	One (1)
MANUFACTURER:	Captive-Aire Systems, Inc.
MODEL NO.:	6630ND-2-PSP-F (N058)
PERTINENT DATA:	Island Back-to-Back Configuration, Captrate Solo Filter Type, Internal Make-up Air, With Fire Protection System
UTILITIES REQ'D:	5,325 CFM Exhaust/4,260 CFM Supply (Tempered); 800W, 120V, 1PH (Lights); 20A, 120V, 1PH (Fire Protection System)
ALTERNATE MFRS.:	Caddy, Halton; Gaylord

Furnish and install per Equipment Plan, Sheet K101; Ventilator Detail Drawing, Sheet K504; Manufacturer's Instructions and the following:

1. 5'-6" Wide x 13'-0" Long x 2'-6" High, with bottom edge mounted at 6'-8" A.F.F. Length comprised of one (1) 13'-0" long at steaming section and one (1) 12'-0" long at baking section. Entire unit constructed of 18 GA stainless steel with liquid tight all welded external continuous seams and joints per N.F.P.A. 96, U.L. and State of Delaware Codes.

2. Six (6) U.L. Listed, NSF-Approved, 36" long twin-tube recessed LED light fixtures; three (3) equally spaced each section. Bulbs furnished and installed by K.E.C.

ITEM #14: (Continued)

3. Matching stainless steel perimeter closure panels to finished ceiling; K.E.C. to verify ceiling height.

4. Surface fire protection system nozzles and piping to be factory installed, chrome plated or stainless steel where exposed, ready for final connections by fire protection system sub-contractor.

5. Hanger rods and support system from structure above by General Contractor. K.E.C. to coordinate method and location with other trades.

6. Stainless steel hanger brackets.

7. 12" wide stainless steel angle framing and closure panels to accommodate Utility Raceway, Item #13.

8. Full-length, front-mounted completely insulated, perforated stainless steel ceiling-mounted make-up air plenum with integral supply air balancing dampers for each hood section.

9. Stainless steel U.L. Classified 20" captrate solo grease filters with hook.

10. Semi-concealed stainless steel grease trough sloped to removable grease cups.

11. Factory supervision of installation and start-up.

12. Ventilator shall be of same manufacturer as Utility Raceway, Item #13.

12. Accessories:
    - -- 12" wide utility cabinet mounted on left end of baking section with factory pre-piped Ansul R-102 fire suppression system.
    - -- Six-month and twelve-month inspections, servicing, and replacement of components of fire protection system as per NFPA-96 Latest Edition.
    - -- One (1) Ansul Model K01-2 hand-held fire extinguisher, 1.6 gallon, wall-mounted.

ITEM #15: SPARE NUMBER

ITEM #16: CONVECTION OVEN

QUANTITY:	Two (2)
MANUFACTURER:	Blodgett Oven Company, Inc.
MODEL NO.:	HV-100E-DOUBLE (N058)
PERTINENT DATA:	Double Section, Standard Depth, HydroVection™
UTILITIES REQ'D:	(2)18.0A, 480V, 3PH; (2)¾" CW, (2)1" IW
ALTERNATE MFRS:	None

Furnish and set-in-place per Equipment Plan, Sheet K101; Manufacturer's Instructions and the following:

1. Accessories (each unit):
    - -- 11" adjustable legs.
    - -- 480-volt, three-phase operation.
    - -- MenuSelect control with core probe.
    - -- Stacking kit.
    - -- Ten (10) multi-purpose fry pans.
    - -- Five (5) additional stainless steel wire racks.
    - -- Water pressure regulator, each compartment.

ITEM #16: (Continued)

-- One (1) Everpure #EV9797-22 KleenSteam II Twin System Water Filter. Ship to Utility Raceway manufacturer for factory installation.

2. Approved backflow preventor furnished and installed by Plumbing Contractor.

3. Electrical and mechanical services supplied through Utility Raceway, Item #13.

ITEM #17: PAN RACK CART, MOBILE

QUANTITY:	Three (3)
MANUFACTURER:	CresCor
MODEL NO.:	207-UA-13A (N058)
PERTINENT DATA:	Universal Angles, Channel Posts, (18) 22x20 Pan Capacity
UTILITIES REQ'D:	----
ALTERNATE MFR:	InterMetro; Lakeside

Furnish and set-in-place per Equipment Plan, Sheet K101, Manufacturer's Instructions and the following:

1. Accessories:
   -- Full perimeter non-marking wrap-around vinyl bumper.

ITEM #18: CONVECTION STEAMER

QUANTITY:	One (1)
MANUFACTURER:	Blodgett Corporation
MODEL NO.:	(2)5E-SBC (N058)
PERTINENT DATA:	Double Stacked, Stand-Mounted 5-Pan, Boilerless, SynergySteam Series
UTILITIES REQ'D:	(2) 15.0A, 480V, 3PH; (2) 3/4" CW, (2) 2" IW
ALTERNATE MFRS.:	None

Furnish and set-in-place per Equipment Plan, Sheet K101; Manufacturer's Instructions and the following:

1. Accessories:
   -- One (1) Everpure #EV9797-22 KleenSteam II Twin System Water Filter. Ship to Utility Raceway manufacturer for factory installation.
   -- 480-volt, three-phase operation.

2. Electrical and mechanical services supplied through Utility Raceway, Item #13.

ITEM #19: TILTING SKILLET

QUANTITY:	One (1)
MANUFACTURER:	Blodgett Corporation
MODEL NO.:	30E-BLP (N058)
PERTINENT DATA:	SynergySteam Series, Narrow Width, With Power Tilt
UTILITIES REQ'D:	14.0A, 480V, 3PH; 1/2" HW, 1/2" CW, 2" IW
ALTERNATE MFRS.:	None

Furnish and set-in-place per Equipment Plan, Sheet K101; Manufacturer's Instructions and the following:

ITEM #19: (Continued)

1. Accessories:
   - -- 480-volt, three-phase operation.
   - -- One (1) double pantry faucet with bracket.
   - -- One (1) lip strainer.
   - -- One (1) pan carrier.
   - -- One (1) 2" tangent draw-off valve.

2. Electrical and mechanical services supplied through Utility Raceway, Item #13.

ITEM #20: WORKTABLE

QUANTITY:	Two (2)
MANUFACTURER:	Custom Fabricated
MODEL NO.:	#14 GA Stainless Steel
PERTINENT DATA:	7'-0" Long x 2'-6" Wide x 3'-0" High
UTILITIES REQ'D:	----
ALTERNATE MFRS.:	None

Fabricate and set-in-place per Equipment Plan, Sheet K101; Fabrication Detail, Sheet K501; and the following:

1. Perimeter edge rolls per Detail 1.02M.

2. Framework per Detail 1.05.

3. Legs per Detail 1.07.

4. Stainless steel undershelf per Detail 1.11.

5. Two (2) stainless steel drawer assemblies per Detail 1.14, Type I with locks.

6. Worktable per Detail 2.01.

7. Sound-deaden underside of tabletop with NSF-approved sound dampening material.

ITEM #21: TILTING KETTLE, 40-GALLON

QUANTITY:	One (1)
MANUFACTURER:	Blodgett Corporation
MODEL NO.:	40E- KLT (N058)
PERTINENT DATA:	SynergySteam Series, Tri-Leg, Self-Contained, 2/3-Jacketed
UTILITIES REQ'D:	29.0A, 480V, 3PH; ½" HW, ½" CW, 2" IW
ALTERNATE MFRS.:	None

Furnish and set-in-place per Equipment Plan, Sheet K101; Manufacturer's Instructions and the following:

1. Accessories:
   - -- 480-volt, three-phase operation.
   - -- One (1) 2" tangent draw-off valve with perforated strainer.
   - -- One (1) complete kettle accessory kit.
   - -- One (1) pan support.
   - -- One (1) kettle lip strainer.
   - -- One (1) spring-assisted hinged stainless steel cover.

ITEM #21: (Continued)

-- One (1) condensate flange on kettle cover.
-- One (1) contour measuring strip.
-- One (1) double pantry 68" wash down spray hose and bracket.

2. Electrical and mechanical services supplied through Utility Raceway, Item #13.

ITEM #22: FLOOR TROUGH

QUANTITY: Two (2)
MANUFACTURER: IMC Teddy Foodservice Corporation
MODEL NO.: ASFT3036 (N058)
PERTINENT DATA: Anti-Spill, 14 GA S/S
UTILITIES REQ'D: 4" W
ALTERNATE MFRS.: None

Furnish and install per Equipment Plan, Sheet K101; Manufacturer's Instructions and the following:

1. 3'-0" long x 2'-6" wide, constructed and installed per Detail, Sheet K102.

2. SGAS-30 anti-slip stainless steel subway style removable floor grate in equal sections, the lessor of 30 lbs. and/or 20" long.

3. Bottom of trough pitched to integral stainless steel waste cup with removable perforated stainless steel basket.

4. Top of trough installed flush with top of kitchen finished floor.

5. Unit furnished by K.E.C.; installed by Plumbing Contractor.

ITEM #23: WORKTABLE

QUANTITY: One (1)
MANUFACTURER: Custom Fabricated
MODEL NO.: #14 GA Stainless Steel
PERTINENT DATA: 10'-0" Long x 2'-6" Wide x 3'-0" High
UTILITIES REQ'D: ----
ALTERNATE MFRS.: None

Fabricate and set-in-place per Equipment Plan, Sheet K101; Fabrication Detail, Sheet K501; and the following:

1. Perimeter edge rolls per Detail 1.02M.

2. Framework per Detail 1.05.

3. Legs per Detail 1.07.

4. Stainless steel undershelf per Detail 1.11.

5. Two (2) stainless steel drawer assemblies per Detail 1.14, Type I with locks.

6. Worktable per Detail 2.01.

ITEM #23: (Continued)

7. Sound-deaden underside of tabletop with NSF-approved sound dampening material.

ITEM #24: WORKTABLE

QUANTITY: One (1)
MANUFACTURER: Custom Fabricated
MODEL NO.: #14 GA Stainless Steel
PERTINENT DATA: 10'-0" Long x 2'-6" Wide x 3'-0" High
UTILITIES REQ'D: ----
ALTERNATE MFRS.: None

Fabricate and set-in-place per Equipment Plan, Sheet K101; Fabrication Detail, Sheet K501; and the following:

1. Perimeter edge rolls per Detail 1.02M.

2. Framework per Detail 1.05.

3. Legs per Detail 1.07.

4. Stainless steel undershelf per Detail 1.11.

5. Two (2) stainless steel drawer assemblies per Detail 1.14, Type I with locks.

6. Worktable per Detail 2.01.

7. Sound-deaden underside of tabletop with NSF-approved sound dampening material.

ITEM #25: BLAST CHILLER/FREEZER

QUANTITY: One (1)
MANUFACTURER: Piper Products
MODEL NO.: RCM084S (N058)
PERTINENT DATA: (8)18x26 Pan Capacity, Self-Contained, Shock Freeze Feature
UTILITIES REQ'D: 9.2A, 208V, 1PH
ALTERNATE MFRS.: None

Furnish and set-in-place per Equipment Plan, Sheet K101; Manufacturer's Instructions and the following:

1. Accessories:
   -- #13-700018 rack option for holding 12"x20" pans.

2. Cord and plug set.

ITEM #26: WORKTABLE

QUANTITY: One (1)
MANUFACTURER: Custom Fabricated
MODEL NO.: #14 GA Stainless Steel
PERTINENT DATA: 8'-0" Long x 2'-6" Wide x 3'-0" High
UTILITIES REQ'D: ----
ALTERNATE MFRS.: None

Fabricate and set-in-place per Equipment Plan, Sheet K101; Fabrication Detail, Sheet K501 and the following:

1. Front and end edge roll per Detail 1.02M.

2. 6" high backsplash per Detail 1.04A.

3. Framework per Detail 1.05.

4. Legs per Detail 1.07.

5. Full-length stainless steel undershelf per Detail 1.11.

6. Two (2) stainless steel drawer assemblies per Detail 1.14, Type I, with locks.

7. Worktable per Detail 2.01.

8. Sound-deaden underside of worktable with NSF-approved sound dampening material.

ITEM #27: HAND SINK

QUANTITY: Seven (7)
MANUFACTURER: Eagle Foodservice Equipment Company
MODEL NO.: HSA-10-FAW-LRS (N058)
PERTINENT DATA: Wall Mounted, Wrist Action Faucet
UTILITIES REQ'D: 1/2" HW, 1/2" CW, 1-1/2" W
ALTERNATE MFRS.: Advance/Tabco; Universal

Furnish and set-in-place per Equipment Plan, Sheet K101; Manufacturer's Instructions and the following:

1. Complete sink assembly consisting of: gooseneck faucet, p-trap, tailpiece and basket drain.

2. Accessories (each unit):
   -- #606215 skirt assembly.
   -- Integral right and left stainless steel splash shield.

ITEM #28: SOAP & TOWEL DISPENSER -- (N.I.C. – FURNISHED BY OWNER)

QUANTITY: Seven (7)

ITEM #29: PASS-THRU REFRIGERATOR, MOBILE

QUANTITY:	Three (3)
MANUFACTURER:	Continental Refrigerator
MODEL NO.:	DL1R-SS-PT-HD (N058)
PERTINENT DATA:	One-Section, Self-Contained, Stainless Steel Interior/Exterior
UTILITIES REQ'D:	5.8A, 120V, 1PH
ALTERNATE MFRS.:	Traulsen; Victory

Furnish and set-in-place per Equipment Plan, Sheet K101; Manufacturer's Instructions and the following:

1. Half-height doors hinged per Equipment Plan. Glass doors on kitchen side, solid doors on serving side.

2. Cylinder locks keyed-alike.

3. No. 1 - #16 gauge stainless steel, angle type, bottom support tray slides in lieu of wire shelves installed on 3" centers in top compartment, eight (8) pair total; standard wire shelves in bottom compartment, four (4) total, each unit.

4. Exterior mounted digital thermometer installed on kitchen side.

5. Four (4) heavy-duty swivel casters, front two (2) with brakes.

6. Cord and plug set.

ITEM #30: SPARE NUMBER

ITEM #31: PASS-THRU HEATED CABINET, MOBILE

QUANTITY:	Three (3)
MANUFACTURER:	Continental Refrigerator
MODEL NO.:	DL1W-SS-PT (N058)
PERTINENT DATA:	One-Section, Self-Contained, Stainless Steel Interior/Exterior
UTILITIES REQ'D:	7.8A, 120/208V, 1PH
ALTERNATE MFRS.:	Traulsen; Victory

Furnish and set-in-place per Equipment Plan, Sheet K101; Manufacturer's Instructions and the following:

1. Half-height doors hinged per Equipment Plan. Glass doors on kitchen side, solid doors on serving side.

2. Cylinder locks keyed-alike.

3. #16 gauge stainless steel, universal angle type, bottom support tray slides in lieu of wire shelves installed on 5" centers, five (5) pair per compartment, ten (10) total, each unit

4. Exterior mounted digital thermometer, installed on kitchen side.

5. Four (4) heavy-duty swivel casters, front two (2) with brakes.

6. Cord and plug with matching receptacle furnished and installed by Electrical Contractor.

ITEM #32: MILK COOLER, MOBILE

QUANTITY: Three (3)
MANUFACTURER: Continental
MODEL NO.: MC3-SS-S (N058)
PERTINENT DATA: 34" Wide, Single Access, Forced-Air, 8-Crate Capacity
UTILITIES REQ'D: 1/4HP, 120V, 1PH
ALTERNATE MFRS.: True; Beverage-Air Corporation; Traulsen

Furnish and set-in-place per Equipment Plan, Sheet K101; Manufacturer's Instructions and the following:

1. Stainless steel exterior and interior.

2. Cord and plug set.

3. Cylinder lid lock.

4. Swivel casters with brakes.

5. Accessories:
   -- #5-223 corner bumpers.

ITEM #33: TRAY DISPENSER, MOBILE

QUANTITY: Three (3)
MANUFACTURER: Piper Products
MODEL NO.: CT-1622 (N058)
PERTINENT DATA: 100~150 Tray Capacity, Cantilever Style, Stainless Steel Finish
UTILITIES REQ'D: ----
ALTERNATE MFRS.: Shelleymatic by The Delfield Co.

Furnish and set-in-place per Equipment Plan, Sheet K101; Manufacturer's Instructions and the following:

1. Accessories:
   -- Perimeter bumpers.
   -- 5" diameter polyurethane swivel casters, two (2) with brakes.

ITEM #34: SERVING COUNTER, MOBILE

QUANTITY: Three (3)
MANUFACTURER: Galley, Inc.
MODEL NO.: Galley Line (N058)
PERTINENT DATA: Straight Line Configuration, #14 GA Stainless Steel Tops
UTILITIES REQ'D: ----
ALTERNATE MFRS.: None

Refer to individual counter components listed under alpha headings for specification.

ITEM #34A: HOT FOOD COUNTER, MOBILE

QUANTITY: One (1)
MANUFACTURER: Galley Inc.
MODEL NO.: 9041 (N058)
PERTINENT DATA: Self-Contained, Open Base, Four (4) Wells, Dry Heat
UTILITIES REQ'D: 14.6A, 120/208V, 1PH
ALTERNATE MFRS.: None

Furnish and set-in-place per Equipment Plan, Sheet K101; Manufacturer's Shop Drawing and the following:

1. Re-use two (2) existing units and relocate to position shown on Equipment Plan, Sheet K101.
2. # 8776 8" wide full-length solid stainless steel fold-down tray slide mounted @28" A.F.F.
3. #8242S heated closed front food protector with tempered glass front and lights.
4. #8670 8" wide solid stainless steel fold-down plate rest mounted on server’s side.
5. #8731W flat end to replace male MateLock end.
6. #8732W flat end to replace female MateLock end.
7. #8758 stainless steel undershelf.
8. #8893 stainless steel interior end liners on both ends.
9. 4" diameter swivel casters with brakes.
10. Cord and plug set.
11. Front decorator panels color to match existing serving counter; K.E.C. to verify.

ITEM #34B: SOLID TOP COUNTER, MOBILE

QUANTITY: One (1)
MANUFACTURER: Galley, Inc.
MODEL NO.: 9310 (N058)
PERTINENT DATA: Open Base, 28" Long
UTILITIES REQ'D: ----
ALTERNATE MFRS.: None

Furnish and set-in-place per Equipment Plan, Sheet K101; Manufacturer's Shop Drawing and the following:

1. Re-use two (2) existing units and relocate to position shown on Equipment Plan, Sheet K101.
2. #8668 8" wide full-length solid stainless steel fold-down tray slide mounted @ 28" A.F.F.
3. #8731W flat end to replace male MateLock end.
4. #8732W flat end to replace female MateLock end.
5. #8893 stainless steel interior end liners.
6. 4" diameter swivel casters with brakes.

ITEM #34B: (Continued)

7. #8756 stainless steel bottom and intermediate undershelf.

8. #8511 height modification - 30" A.F.F.

9. Front decorator panels color to match existing serving counter; K.E.C. to verify.

ITEM #34C: COLD FOOD COUNTER, MOBILE

QUANTITY:	One (1)
MANUFACTURER:	Galley Inc.
MODEL NO.:	9630 (N058)
PERTINENT DATA:	10" Deep, Mechanically Refrigerated, NSF 7, 50" Long, 3-Well
UTILITIES REQ'D:	7.7A, 120V, 1PH; 1" IW
ALTERNATE MFRS.:	None

Furnish and set-in-place per Equipment Plan, Sheet K101; Manufacturer's Shop Drawing and the following:

1. Re-use two (2) existing units and relocate to position shown on Equipment Plan, Sheet K101.

2. #8774 8" wide full-length solid stainless steel fold-down tray slide mounted @ 28" A.F.F.

3. #8135E one-sided 20" high double-deck display case with lights and shields.

4. #8731W flat end to replace male MateLock end.

5. #8732W flat end to replace female MateLock end.

6. #8759 stainless steel undershelf.

7. #8893 stainless steel interior end liners on both ends.

8. #8511 height modification - 30" A.F.F.

9. Cord and plug set.

10. 4" diameter swivel casters with brakes.

11. Front decorator panels color to match existing serving counter; K.E.C. to verify.

ITEM #34D: CASHIER STAND, MOBILE

QUANTITY:	Three (3)
MANUFACTURER:	Galley, Inc.
MODEL NO.:	9408 (N058)
PERTINENT DATA:	28" Long
UTILITIES REQ'D:	15A, 120V, 1PH (Dedicated Circuit)
ALTERNATE MFRS.:	None

Furnish and set-in-place per Equipment Plan, Sheet K101; Manufacturer's Shop Drawing and the following:

1. #8776 8" wide full-length solid stainless steel fold-down tray slide mounted @ 28" A.F.F.

ITEM #34D: (Continued)

2. #8731W flat end to replace male MateLock end.

3. #8732W flat end to replace female MateLock end.

4. #8893 stainless steel interior end liners.

5. #8758 stainless steel undershelf.

6. 4" diameter swivel casters with brakes.

7. #8559J cashier's drawer assemblies with locking provision mounted on long end.

8. #8881 custom counter top cut-out.

9. #8698 duplex outlets with cord and plug sets mounted in counter base.

10. Front decorator panels color to match existing serving counter; K.E.C. to verify.

ITEM #35: CASH REGISTER -- (N.I.K.E.C. – FURNISHED BY OWNER)

QUANTITY: Three (3)

ITEM #36: TRASH CONTAINER, MOBILE

QUANTITY: Two (2)
MANUFACTURER: Rubbermaid Commercial Products, Inc.
MODEL NO.: 2632 (N058)
PERTINENT DATA: 32-Gallon Capacity
UTILITIES REQ'D: ----
ALTERNATE MFRS.: Continental Plastics

Furnish and set-in-place per Equipment Plan, Sheet K101; Manufacturer's Instructions and the following:

1. Grey in color.

2. Accessories:
   -- Two (2) #2645 matching flat lids.
   -- Two (2) #2640 conversion dollies.

ITEM #37: ROLLING DOOR – (N.I.K.E.C. - SPECIFIED BY ARCHITECT)

QUANTITY: One (1)

ITEM #38: SOILED DISHTABLE

QUANTITY: One (1)
MANUFACTURER: Custom Fabricated
MODEL NO.: #14 GA Stainless Steel
PERTINENT DATA: 3'-9"± x 6'-4"± x 6'-0" Long x 2'-6" Wide x 3'-0" High
UTILITIES REQ'D: 1-1/2" IW
ALTERNATE MFR.: None

Fabricate and set-in-place per Equipment Plan, Sheet K101; Fabrication Detail, Sheet K502; and the following:

1. Front and right end edge roll per Detail 1.02B.

2. 13" high backsplash per Detail 1.04A.

3. Framework per Detail 1.05.

4. Legs per Detail 1.07.

5. Crossbracing per Detail 1.10.

6. Soiled dishtable per Detail 2.02.

7. Provide stainless steel crossrails under pass-thru windows for storage of 20" x 20" dish/glass racks.

8. Table trough at entrance to dishmachine per Detail 2.03.

9. Pre-rinse sink per Detail 3.04. Weld collar adapter to underside of sink for Disposer, Item #39.

10. Stainless steel disposer control bracket.

11. 20" wide x 8" deep integral pre-rinse sink with one-piece removable #20 gauge perforated stainless steel scrap basket with 1" diameter fully welded tubular cross-rails set flush with tabletop. Raise deck at rear of sink 6" for deck-mounted pre-rinse spray and extend to opening of dishmachine to act as rack guide.

12. Sound-deaden underside of sink and drainboard with NSF-approved sound dampening material.

ITEM #39: DISPOSER

QUANTITY: One (1)
MANUFACTURER: In-Sink-Erator
MODEL NO.: SS-200-6-AS101 (N058)
PERTINENT DATA: #6 Collar Adapter Assembly
UTILITIES REQ'D: 2 HP, 408V, 3PH; 1/2" CW, 2" W
ALTERNATE MFRS.: Salvajor

Furnish and install per Equipment Plan, Sheet K101; Manufacturer's Instructions and the following:

1. Aqua saver control center mounted on 14 GA stainless steel bracket.

2. Weld No.6 disposer collar adapter to underside of pre-rinse sink, Item #38.

3. Accessories:
   -- One (1) T&S #B-455 vacuum breaker in lieu of standard unit.

ITEM #40: RETRACTABLE HOSE REEL

QUANTITY:	One (1)
MANUFACTURER:	Fisher Manufacturing Company
MODEL NO.:	2980 (N058)
PERTINENT DATA:	Wall-Mounted, Open No Cover, 35' Long Hose
UTILITIES REQ'D:	1/2"HW, 1/2"CW
ALTERNATE MFRS.:	T&S Brass

Furnish and install per Equipment Plan, Sheet K101; Manufacturer's Instructions and the following:

1. Mount hose reel assembly on wall with bottom of spray head @ 6'-0" A.F.F. when in fully retracted position.

2. Accessories:
   -- One (1) Aquatrol Model #1801 recessed stainless steel control cabinet with valves, gauges, fittings and components for a complete system.

ITEM #41: VENT DUCT

QUANTITY:	Two (2)
MANUFACTURER:	Custom Fabricated
MODEL NO.:	Stainless Steel
PERTINENT DATA:	----
UTILITIES REQ'D:	300 CFM (Load End), 600 CFM (Unload End)
ALTERNATE MFRS.:	None

Fabricate and install per Equipment Plan, Sheet K101; and the following:

1. Constructed and installed per Detail 5.06.

ITEM #42: DISHMACHINE

QUANTITY:	One (1)
MANUFACTURER:	Hobart Corporation
MODEL NO:	CLPS66E-Buildup (N058)
PERTINENT DATA:	Fully Automatic Rack-Type, Power Wash, 180° F Final Rinse, Built-In Booster Heater, 202 Racks/Hour
UTILITIES REQ'D:	30.6A, 480V, 3PH; 30.0KW, 480V, 3PH (Booster Heater)10.0A, 120V, 1PH (Drain Cooling Kit); 3/4" HW (180°F.), 1/2" CW (Drain Cooling Kit), 2" IW
ALTERNATE MFRS.:	None

Furnish and set-in-place per Equipment Plan, Sheet K101; Manufacturer's Instructions and the following:

1. Soap dispensing system and rinse additive system by soap chemical vendor.

2. Stainless steel feet, frame, legs and front panel.

3. Common drain manifold and tank fill.

4. Automatic fill with safety switch at drain valve handle.

5. Energy savings auto-timer control package with table-limit switch.

6. Electric tank heat.

ITEM #42: (Continued)

7. Right-to-left operation.

8. Vent fan control.

9. Accessories:
   - -- One (1) #HOOD-EXTEND 4"x16" extended vent hood with locking damper.
   - -- Four (4) #250-TX open-end 20"x20" racks for 18"x26" sheet pans.
   - -- Six (6) #DISHRAK-PEG20 peg-type, and four (4) #DISHRAK-COM20 combination-type 20"x20" plastic racks
   - -- Stainless steel splash shields.
   - -- One (1) #DWTCLE drain water tempering kit.
   - -- One (1) #ERH30K 30KW built-in booster heater.
   - -- One (1) #CLE/TBL-SWITCH table limit switch.
   - -- One (1) #WTRHAM-ARREST water hammer arrestor kit.
   - -- One (1) #SPCYES single-point electrical connection.
   - -- One (1) #HTG6HI stainless steel frame with 6" extended height chamber.

ITEM #43: CLEAN DISHTABLE

QUANTITY:	One (1)
MANUFACTURER:	Custom Fabricated
MODEL NO.:	#14 GA Stainless Steel
PERTINENT DATA:	8'-6" Long x 2'-6" Wide x 2'-10" High
UTILITIES REQ'D:	----
ALTERNATE MFR.:	None

Fabricate and set-in-place per Equipment Plan, Sheet K101; Fabrication Detail, Sheet K502; and the following:

1. Front and left end edge roll per Detail 1.02B.

2. 13" high backsplash per Detail 1.04A.

3. Framework per Detail 1.05.

4. Legs per Detail 1.07.

5. Stainless steel undershelf per Detail 1.11.

6. 6'-0" long table -mounted stainless steel overshelf per Detail 1.12A.

7. Dishtable per Detail 2.02.

8. Sound-deaden underside of drainboard with NSF-approved sound-dampening material.

9. Install table limit switch (supplied with Dishmachine, Item #42) in end of dishtable, inter-wired by Electrical Contractor.

ITEM #44: POT WASHING SINK

QUANTITY:	One (1)
MANUFACTURER:	Custom Fabricated
MODEL NO.:	#14 GA Stainless Steel
PERTINENT DATA:	11'-0" Long x 2'-6" Wide x 3'-0" High
UTILITIES REQ'D:	(2) 3/4" HW, (2) 3/4" CW, (3) 2" IW
ALTERNATE MFR.:	None

Fabricate and set-in-place per Equipment Plan, Sheet K101; Fabrication Detail, Sheet K502; and the following:

1. Front and end edge roll per Detail 1.02B.

2. 13" high backsplash per Detail 1.04A.

3. Framework per Detail 1.05

4. Legs per Detail 1.07.

5. Crossbracing per Detail 1.10.

6. Stainless steel undershelf on both ends per Detail 1.11.

7. 7'-6" long table -mounted stainless steel overshelf per Detail 1.12A.

8. Pot sink and drainboards per Detail 3.01.

9. Sound-deaden underside of sinks and drainboards with NSF-approved sound dampening material.

10. Accessories:
    -- Two (2) T&S #B-290 backsplash mounted swing spout faucets.
    -- Three (3) T&S #B-3950-01 twist waste valves with overflow assemblies and #010387-45 basket strainers.

11. Item will remain shrink-wrapped until ready for final connection by Plumbing Contractor. Immediately following completion of final connections, K.E.C. shall re-shrink-wrap tubs or provide removable panel to avoid use by construction trades. Post sign on wall above sink tubs in English and Spanish stating: WARNING! NOT TO BE USED BY CONSTRUCTION TRADES. FAILURE TO COMPLY WILL RESULT IN $500.00 FINE AND ALL COSTS TO REPLACE ITEM WITH NEW.

ITEM #45: POT & PAN SHELVING, MOBILE

QUANTITY:	One (1)
MANUFACTURER:	InterMetro Industries Corporation
MODEL NO.:	MetroMax i (N058)
PERTINENT DATA:	Four-Tier High, Open Grid Shelf, Polymer
UTILITIES REQ'D:	----
ALTERNATE MFR.:	None

Furnish and set-in-place per Equipment Plan, Sheet K101, Manufacturer's Instructions and the following:

1. One (1) #MX2448G section; 24" W x 48" L x 4-tier high.

2. Four (4) #MX63UP polymer posts for stem casters, 63" high.

ITEM #45: (Continued)

3. Two (2) #5MPX polyurethane swivel casters with donut bumpers.

4. Two (2) #5MPBX polyurethane casters with brakes and donut bumpers.

5. Plastic wedge lock connectors, quantity as required.

6. Locate bottom shelf @ 18" A.F.F., space remaining shelves equally.

ITEM #46: MOP SINK & RACK

QUANTITY:	One (1)
MANUFACTURER:	Eagle Foodservice Equipment Corporation
MODEL NO.:	F1916 (N058)
PERTINENT DATA:	Floor Mounted, Standard Unit
UTILITIES REQ'D:	1/2" HW, 1/2" CW, 2" W
ALTERNATE MFRS.:	Advance/Tabco; Universal

Furnish and set-in-place per Equipment Plan, Sheet K101; Manufacturer's Instructions and the following:

1. Accessories:
   -- One (1) #312689 hose and bracket assembly, 36" long.
   -- One (1) #312690 service sink wall faucet.
   -- One (1) #321561 mop holder with four (4) individual rubber holders.

2. Furnish 16 gauge stainless steel flashing along two (2) walls adjacent sink, 36" high. Attach to wall with non-exposed fasteners and seal to wall and sink.

ITEM #47: WASHER/DRYER, STACKED – (N.I.K.E.C. – SPECIFIED BY ARCHITECT)

QUANTITY: One (1)

ITEM #48: CORNER GUARD

QUANTITY:	Four (4)
MANUFACTURER:	Custom Fabricated
MODEL NO.:	Stainless Steel
PERTINENT DATA:	Wall Mounted
UTILITIES REQ'D:	----
ALTERNATE MFRS.:	Eagle Group; Advance/Tabco

Fabricate and set-in-place per Equipment Plan, Sheet K101, and the following:

1. Constructed per Detail 1.03.

2. Mount on wall directly above finished floor coved base with concealed fasteners and clear silicone sealant.

ITEM #49: RETRACTABLE CORD REEL

QUANTITY:	Six (6)
MANUFACTURER:	APC Group Inc.
MODEL NO.:	Kitchen Leash (N058)
PERTINENT DATA:	Ceiling-Mounted, With Adjustable Stop, Non-GFI Receptacle
UTILITIES REQ'D:	15.0A, 120V, 1PH
ALTERNATE MFRS.:	None

Furnish and install per Equipment Plan, Sheet K101; Manufacturer's Instructions and the following:

1. Electrical Contractor to furnish and install GFCI type breaker at kitchen electrical panel board.

(END OF FOODSERVICE ITEMIZED SPECIFICATIONS)

STANDARD DETAILS

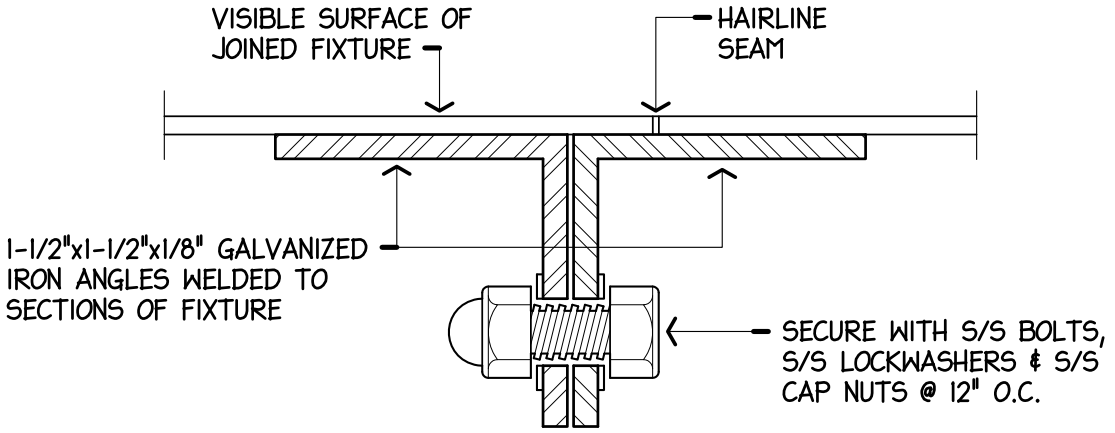

NOTE! JOINED SECTIONS SHALL BE DRAWN TOGETHER LEAVING ONLY A HAIRLINE SEAM.

A. BOLT DRAWN JOINT

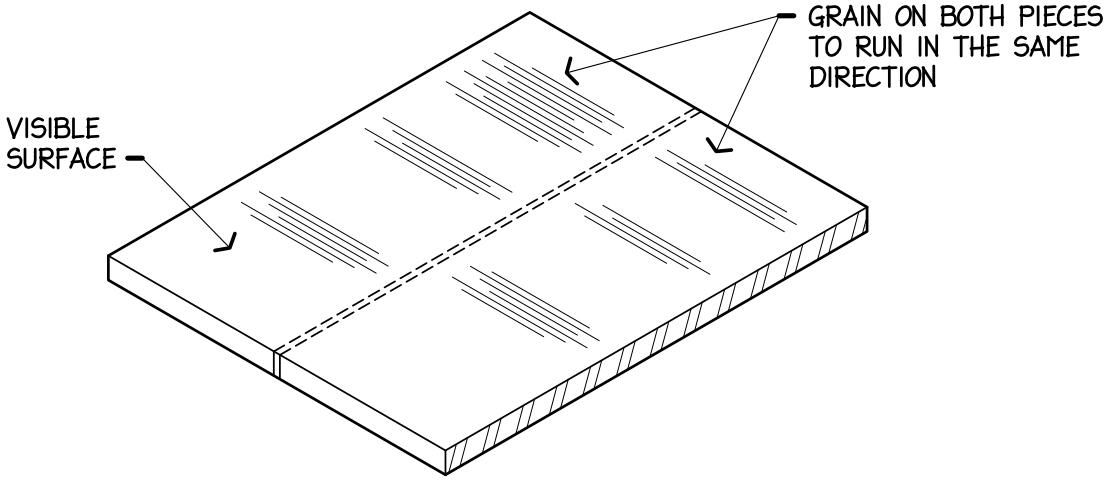

NOTE! ON FIXTURES SPECIFIED WITH WELDED FIELD JOINTS, WELDS SHALL BE CONTINUOUS, GROUND & POLISHED LEAVING NO VISIBLE EVIDENCE OF WELD.

B. WELDED BUTT JOINT

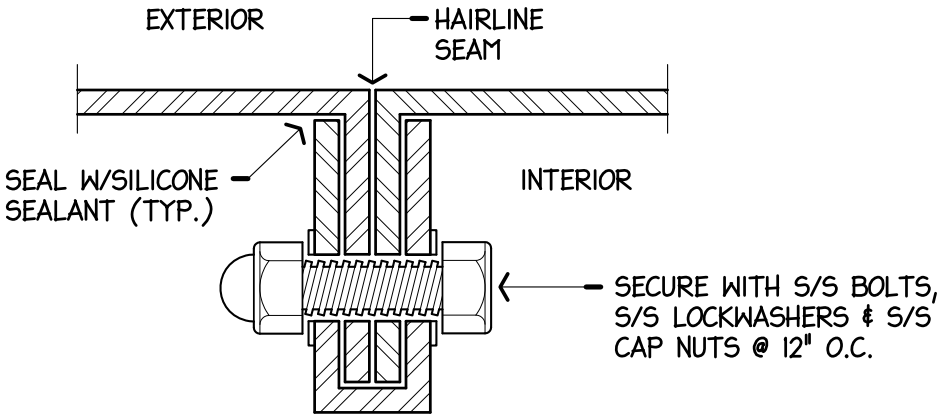

NOTE! JOINED SECTIONS SHALL BE DRAWN TOGETHER LEAVING ONLY A HAIRLINE SEAM.

C. RAISED CAP SEAM - KNUCKLE JOINT

NYIKOS ASSOCIATES, INC. Food Facilities Design/Consulting	DESCRIPTION: FIELD JOINTS & ASSEMBLY	STANDARD DTL: 1.01 PAGE: 114000-52

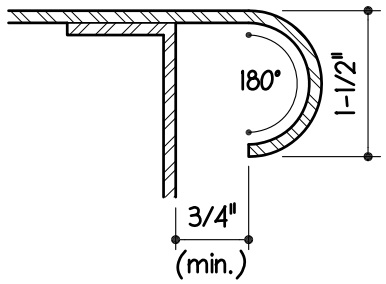

ROLLED A.

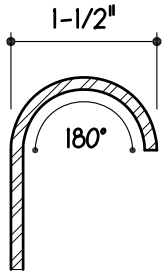

RAISED ROLLED B.

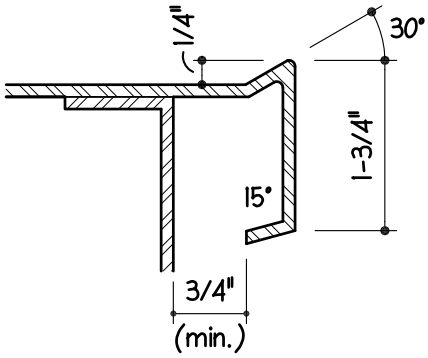

INVERTED "V" EDGE C.

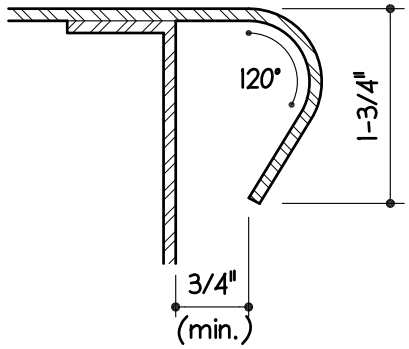

BULL NOSE ROLLED D.

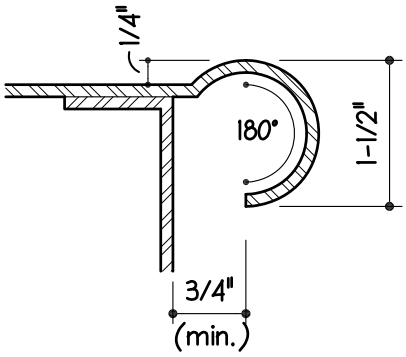

MARINE EDGE E.

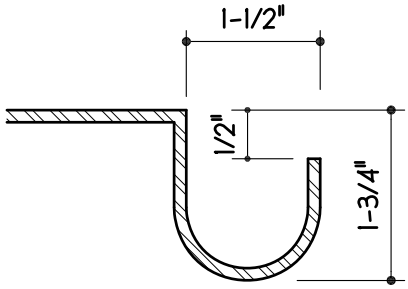

FLOUR GUTTER F.

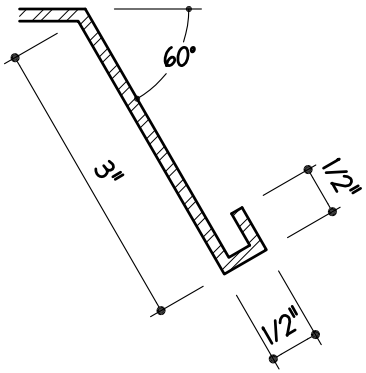

RECIPE CARD HOLDER G.

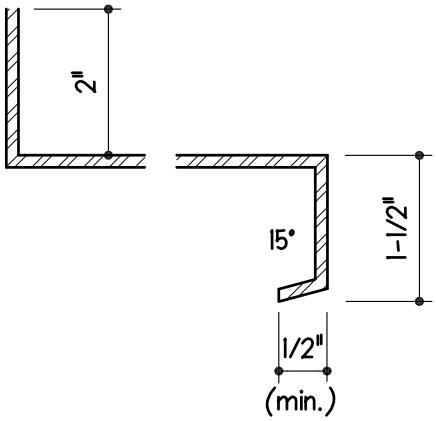

UNDERSHELF EDGE H.

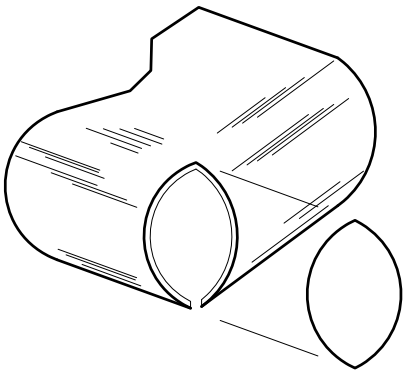

BULL NOSE CORNER I.

NYIKOS ASSOCIATES, INC. Food Facilities Design/Consulting	DESCRIPTION: EDGES	STANDARD DTL: 1.02 PAGE: 114000-53

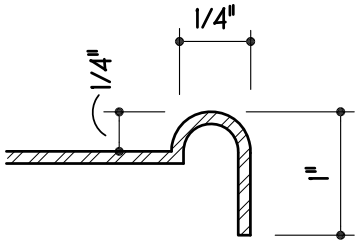

RAISED OPENING EDGE J.

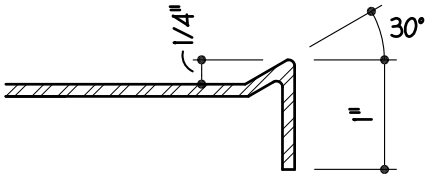

RAISED OPENING EDGE K.

a. AS SPECIFIED. TO MATCH ADJACENT ROLLED EDGES

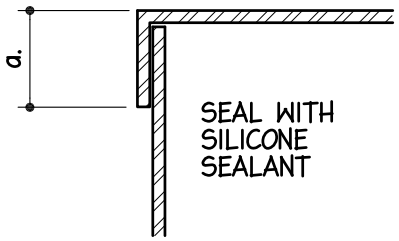

STRAIGHT TURN DOWN L.

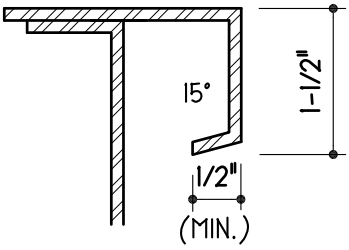

TURNED DOWN EDGE M.

NYIKOS ASSOCIATES, INC.
Food Facilities Design/Consulting

DESCRIPTION:

EDGES

STANDARD DTL: 1.02.1

PAGE: 114000-54

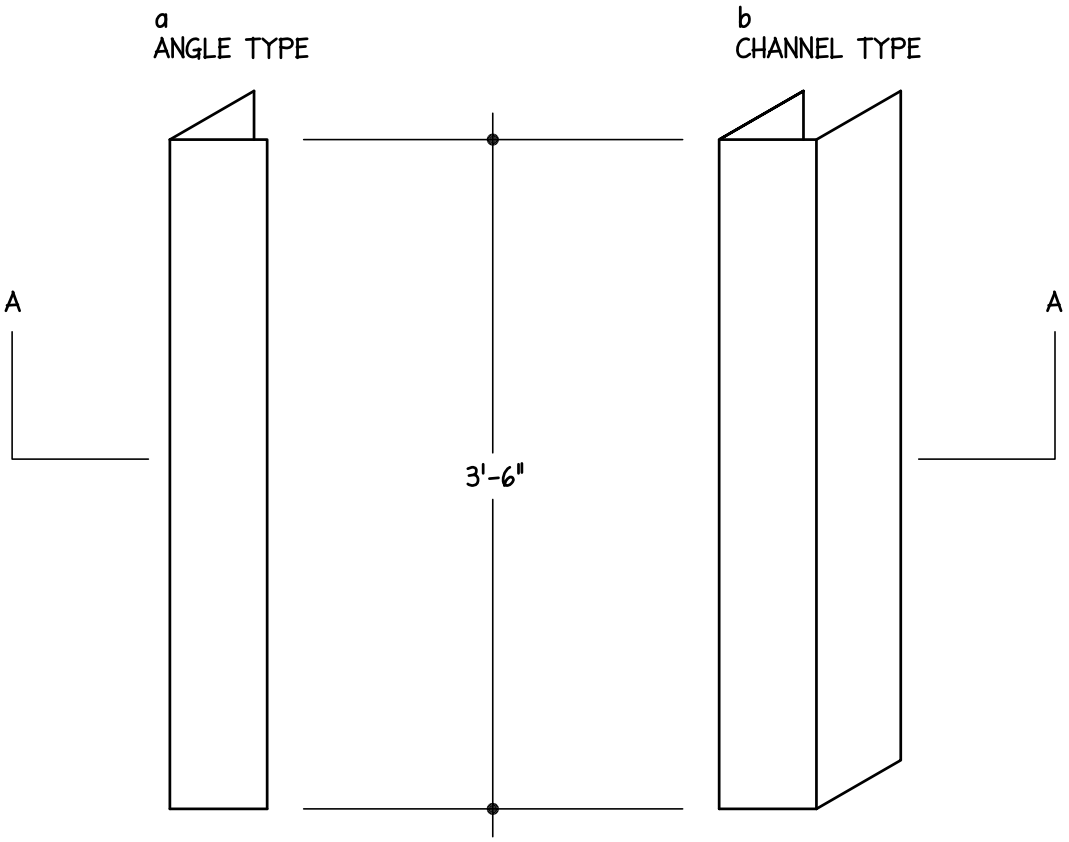

ELEVATION

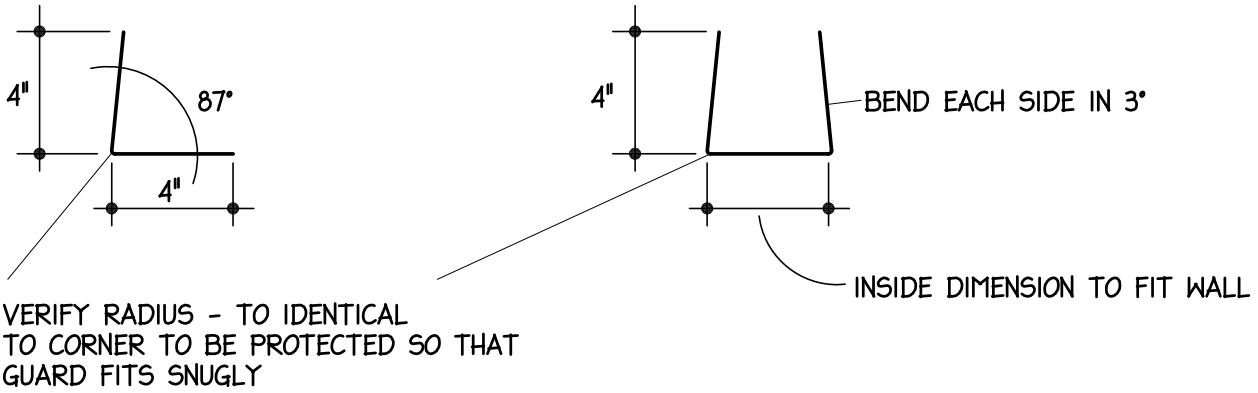

SECTION A-A

NOTE!
MOUNT 16 STAINLESS STEEL CORNER GUARDS ON CORNERS IMMEDIATELY ABOVE 5" HIGH COVE BASE TILE WITH SUITABLE S/S FASTENERS AND CAULK WITH DOW CORNING #780 SILICONE BUILDING SEALANT.

NYIKOS ASSOCIATES, INC. Food Facilities Design/Consulting	DESCRIPTION: CORNER GUARDS	STANDARD DTL: 1.03 PAGE: 114000-55

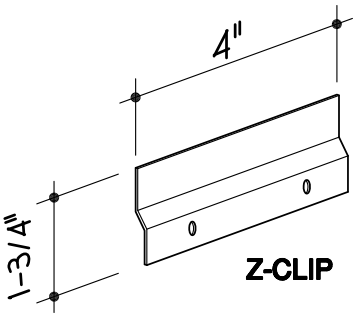

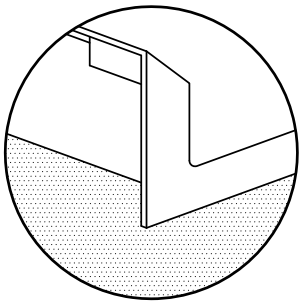

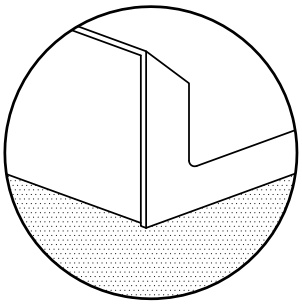

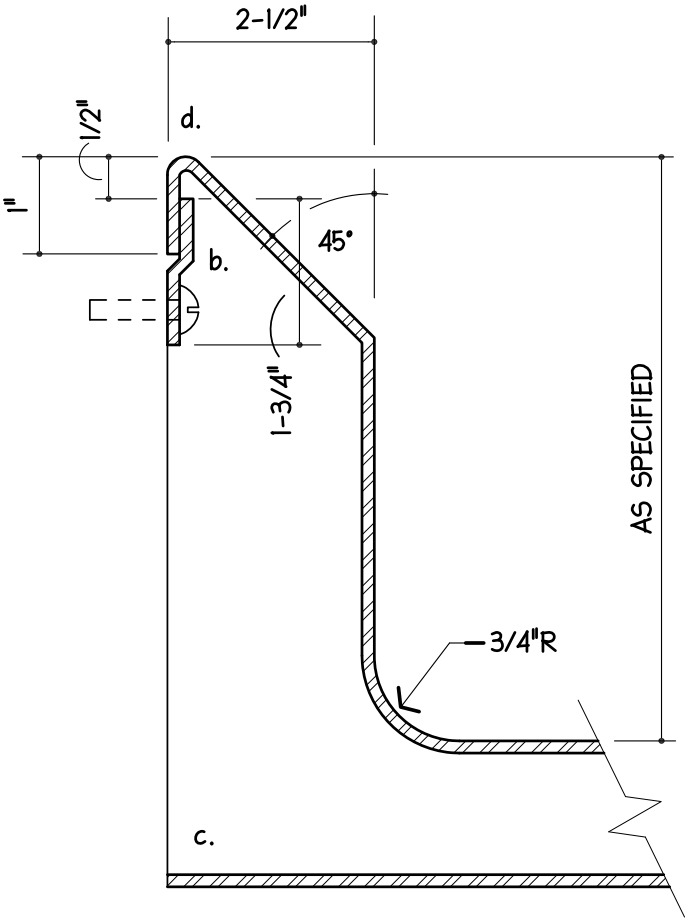

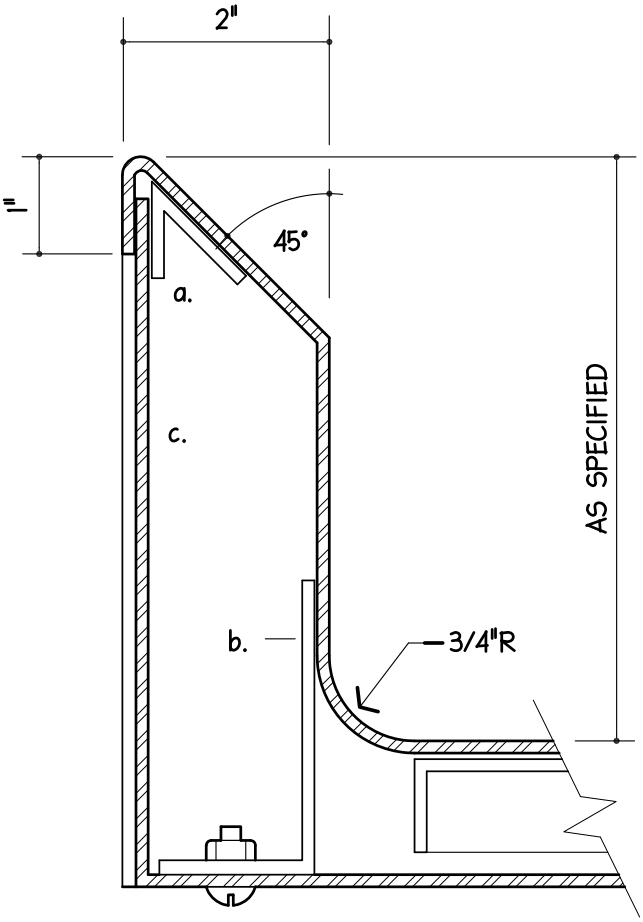

WALL UNIT

DETAIL A

a. 2-1/2" AT SINK TO ALLOW FOR CONNECTED OVERFLOW

b. 12 GA. S/S CLIPS, 4" LONG, FASTENED TO EACH WALL END OF EACH UNIT ¢ 4'-0" ON CENTER. SECURE TO WALL W/A MINIMUM OF TWO 1/4"x20 S/S TOGGLE BOLTS OR EXPANSION SHIELDS.

c. EXPOSED ENDS TO BE FULLY WELDED CLOSED.

d. SEAL ALL AROUND TO WALL WITH SILICONE SEALANT.

FREE STANDING UNIT

DETAIL B

a. 1"x1"x14 GA. S/S x1-1/2"LONG RETAINING CLIP WELDED IN PLACE. ONE AT EACH END OF UNIT AND 12" ON CENTER.

b. 2-1/2"x1-1/2x1-1/2" 14 GA.S/S CLIP WELDED TO SPLASH. ONE AT OF EACH UNIT ¢ 12" ON CENTER.

c. 14 GA S/S PANEL SECURED TO CLIPS W/ S/S OVALHEAD BOLT. WELD NUT TO CLIP.

d. EXPOSED ENDS TO BE FULLY WELDED.

NYIKOS ASSOCIATES, INC. Food Facilities Design/Consulting	DESCRIPTION: BACKSPLASHES	STANDARD DTL: 1.04 PAGE: 114000-56

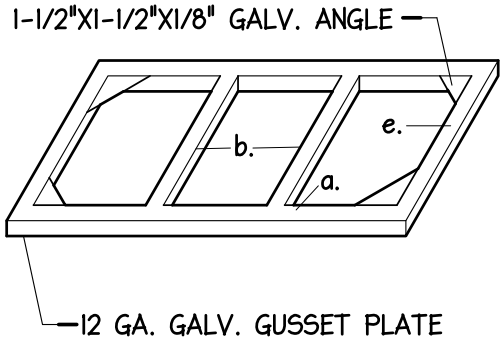

TABLES

A.

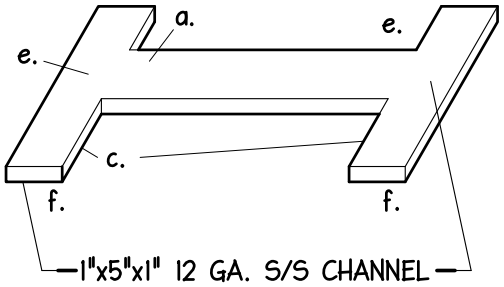

DISHTABLES

B.

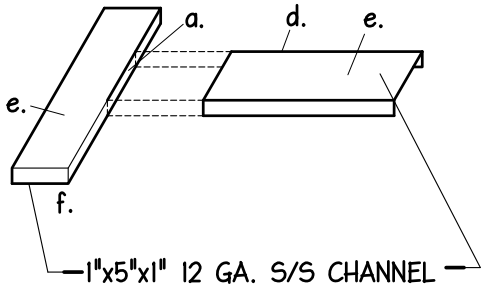

SINK DRAINBOARDS

C.

a. FULLY WELDED CONSTRUCTION.

b. ANGLE LOCATION - ENDS; SIDES OF TOP INSETS; INTERMEDIATES 24" ON CENTER.

c. CHANNEL LOCATION - ENDS AND INTERMEDIATE MAXIMUM 6'-6" O.C.

d. ADD CENTER CHANNEL WHEN DRAINBOARD LENGHT EXCEEDS 5'-6".

e. SECURE TOP TO FRAMEWORK WITH WELDED STUDS, S/S LOCKWASHERS AND CAP NUTS.

f. CLOSE CHANNEL AT FRONT ONLY.

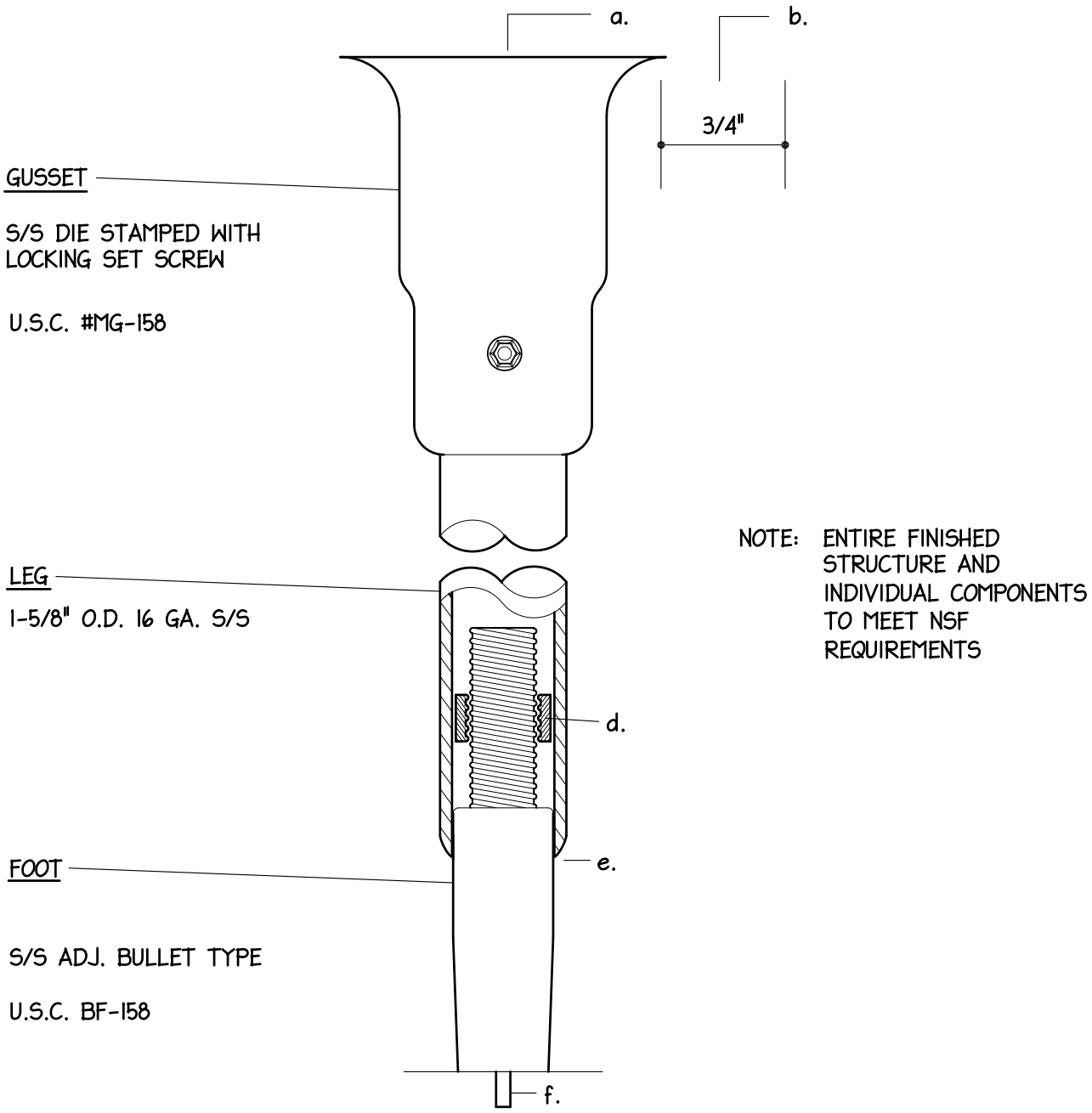

a. FULLY WELD GUSSET TO FRAMEWORK OR SINK

b. 3/4" MINIMUM CLEARANCE ALL AROUND

c. SET SCREW NOT VISIBLE TO WORKING SIDE OF EQUIPMENT.

d. MAXIMUM 1/32" CLEARANCE BETWEEN LEG AND FOOT

e. FOOT SET AT MIDPOINT TO ALLOW 1" ADJUSTMENT UP AND 1" DOWN. WITHOUT THREAD EXPOSURE.

f. LEGS UNSUPPORTED LATERALLY BY CROSSBACKING OR UNDERSHELVES SHALL BE PINNED TO FLOOR USING 1/4" DIA. X 1/2" PINS WELDED TO FOOT AND SET IN MATCHING HOLES IN THE FLOOR.

NYIKOS ASSOCIATES, INC. Food Facilities Design/Consulting	DESCRIPTION: TABLE & SINK LEGS	STANDARD DTL: 1.07 PAGE: 114000-58

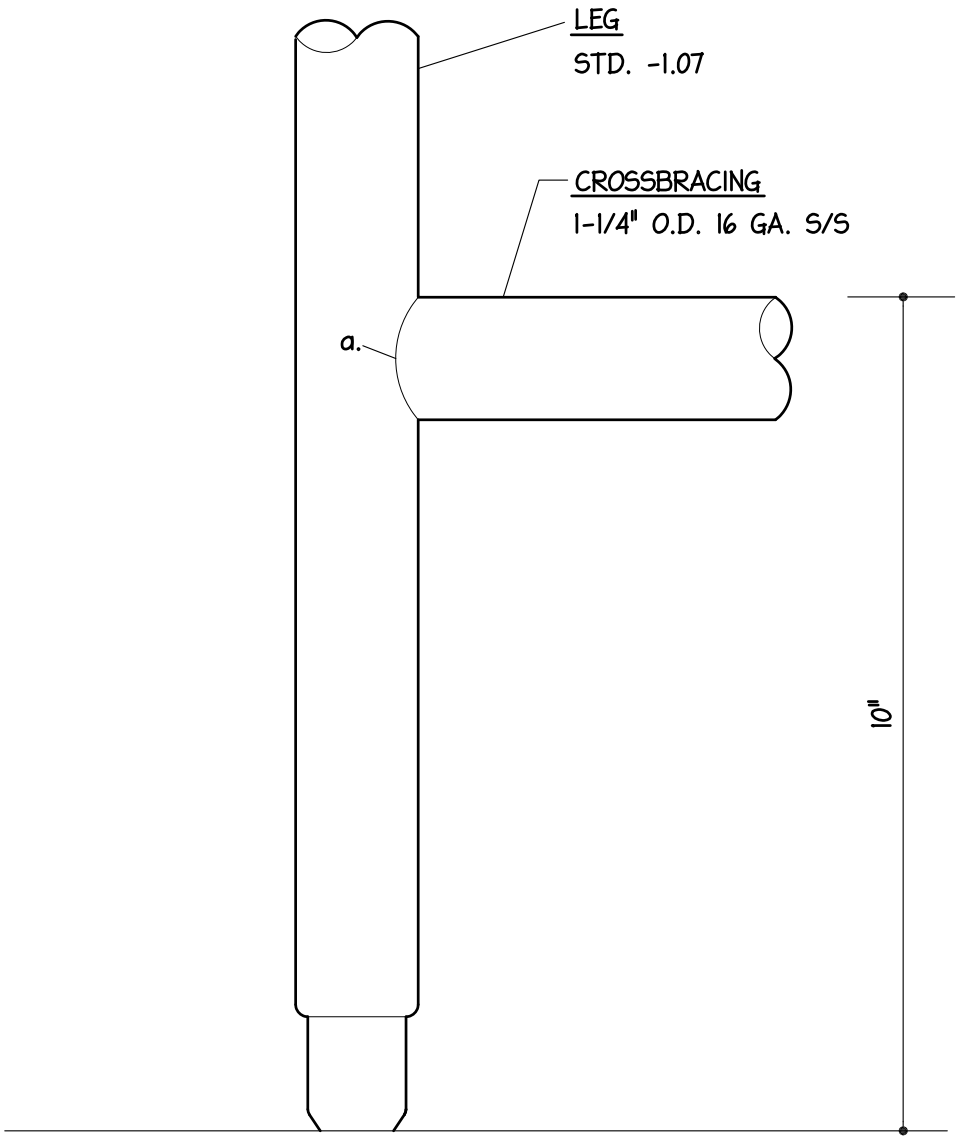

a. FULLY WELD, GRIND SMOOTH AND POLISH.

NYIKOS ASSOCIATES, INC. Food Facilities Design/Consulting	DESCRIPTION: CROSSBRACING	STANDARD DTL: 1.10 PAGE: 114000-59

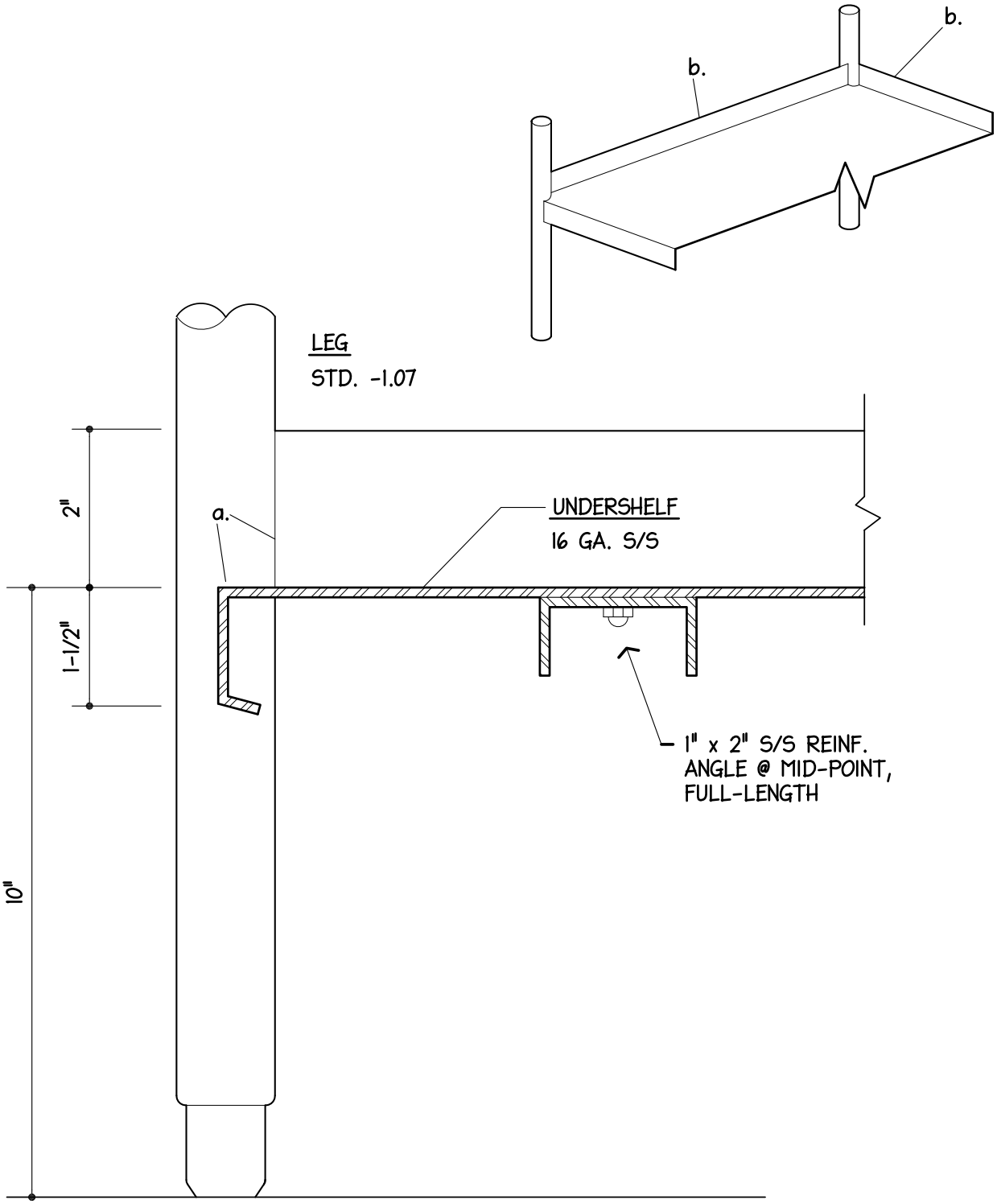

a. FULLY WELD, GRIND SMOOTH AND POLISH.

b. WHEN SPECIFIED, TURN REAR AND ENDS UP 2".

NYIKOS ASSOCIATES, INC. Food Facilities Design/Consulting	DESCRIPTION: UNDERSHELF	STANDARD DTL: 1.11 PAGE: 114000-60

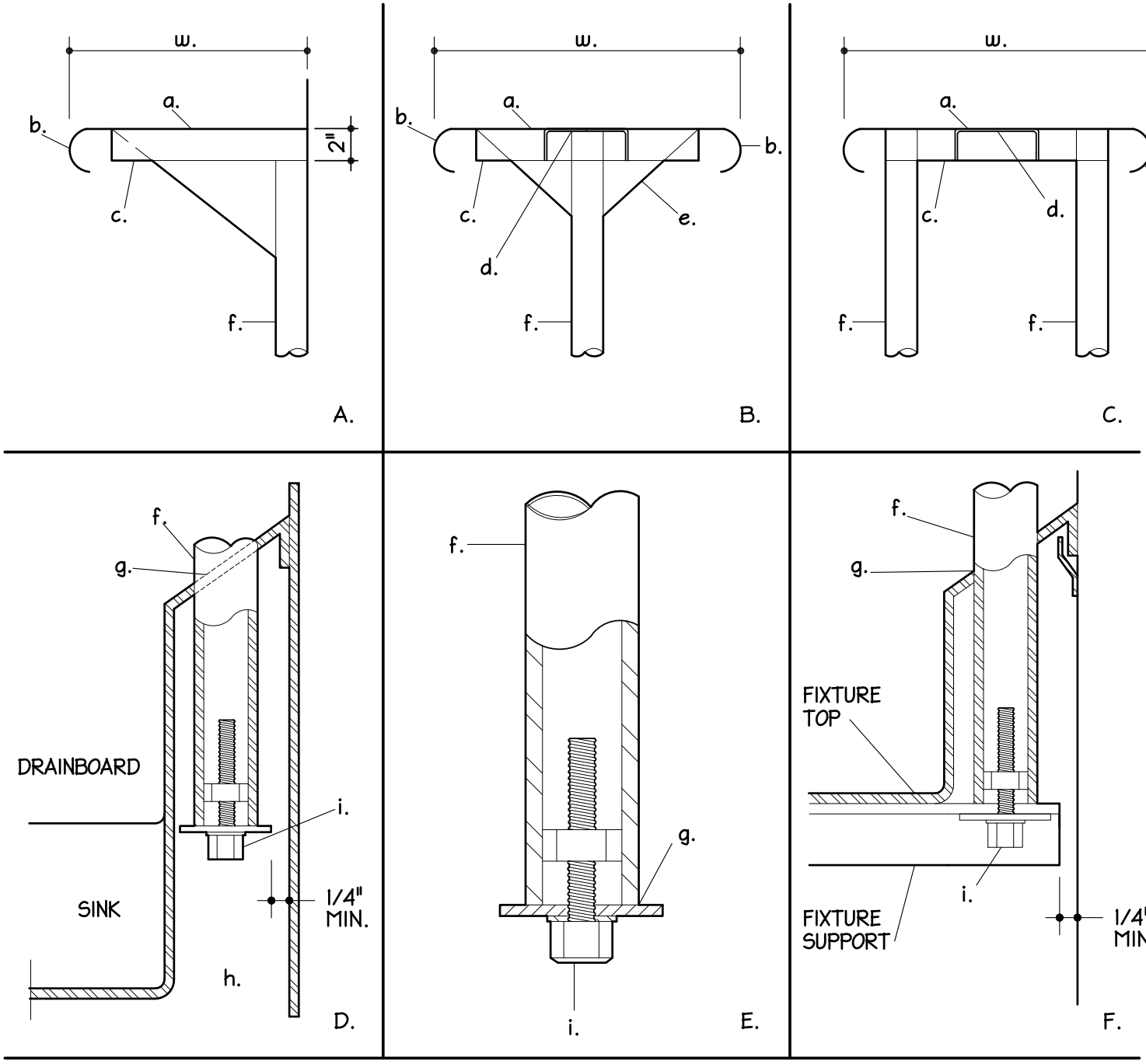

a. 16 GA S/S SHELF

b. STD.- 1.02 EDGE

c. 1"x 3"x 1" 14 GA. S/S CROSS CHANEL

d. 1'x 3"x 1" 14 GA. S/S LENGTHWISE CHANNEL WHEN LENGTH BETWEEN SUPPORTS EXCEEDS 42"

e. 14 GA. S/S BRACKETS FULLY WELDED TO SUPPORT AND CHANNEL..

f. 1-1/4" O.D. 16 GA. S/S UPRIGHT. MAXIMUM 5'-0" ON CENTER.

g. TIGHT FIT. SEAL WITH SILICONE SEALANT.

h. 1-1/2"x 1-1/2" 12 GA. S/S CLIPS WELDED TO REAR OF SPLASH AT DRAINBOARD HEIGHT.

i. 3/8"x 16 S.S. HEX HEAD BOLT, S/S NUT & S/S LOCKWASHER. NUT WELDED IN TUBE.

w. WIDTH AS SPECIFIED.

NYIKOS ASSOCIATES, INC. Food Facilities Design/Consulting	DESCRIPTION: **OVERSHELVES & SUPPORTS**	STANDARD DTL: **1.12** PAGE: **114000-61**

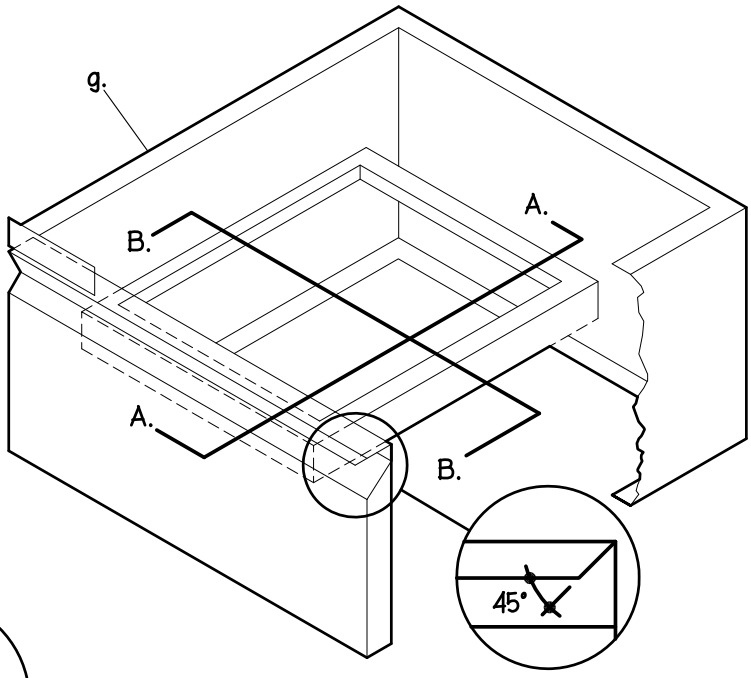

e. 16 GA. S/S ALL WELDED.

f. 3 PIECE SELF CLOSING DWR. SLIDE AS MFD. BY COMPONENT HARDWARE MODEL #S52-0020 WITH S/S ROLLER BEARINGS. PITCH SLIDE DOWNWARD 3/8" PER FOOT FOR SELF-CLOSING ACTION.

g. 18 GA. S/S DWR. ENCLOSURE. ALL WELDED.

h. SEMI - RIGID FIBERGLASS SOUND DAMPENING.

j. HARD RUBBER DRAWER BUMPER EACH CORNER.

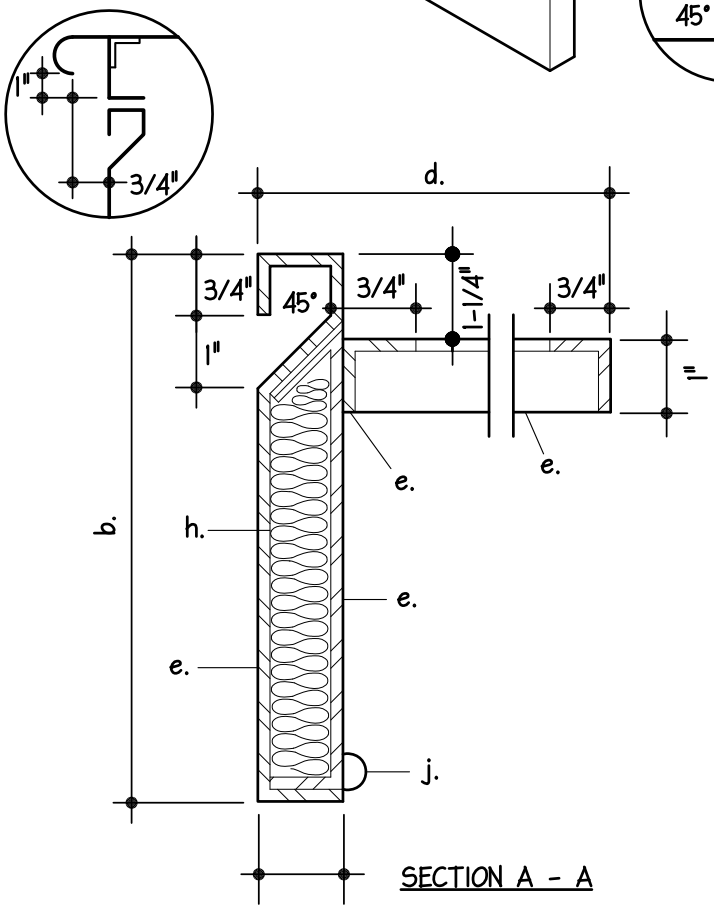

SECTION A - A

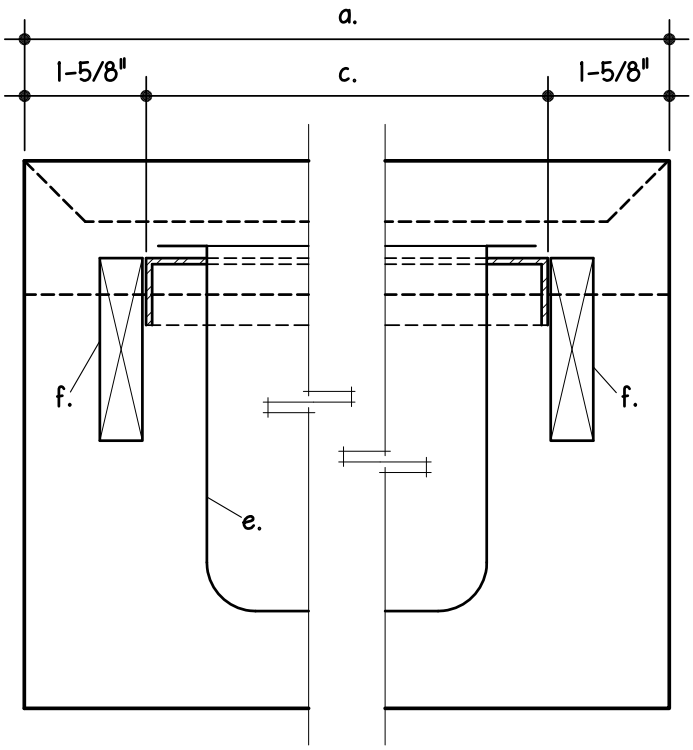

SECTION B -B

i. PROVIDE DIE - STAMPED #18 GA. S/S DWR. PANS AS FOLLOWS:

TYPE	NO.	PANS	a.	b.	c.	d.
I	1	20x20x5 DP.	25	7-1/2	21-3/4	22-3/4
II	1	20x20x8 DP.	25	10-1/2	21-3/4	22-3/4
III	1	12x20x4 DP.	25	6-1/2	21-3/4	14-1/2
IV	2	12x20x4 DP.	28	6-1/2	26-1/4	22-1/2
V	1	12x20x4 DP.	17	13-1/2	13-1/2	22-1/2

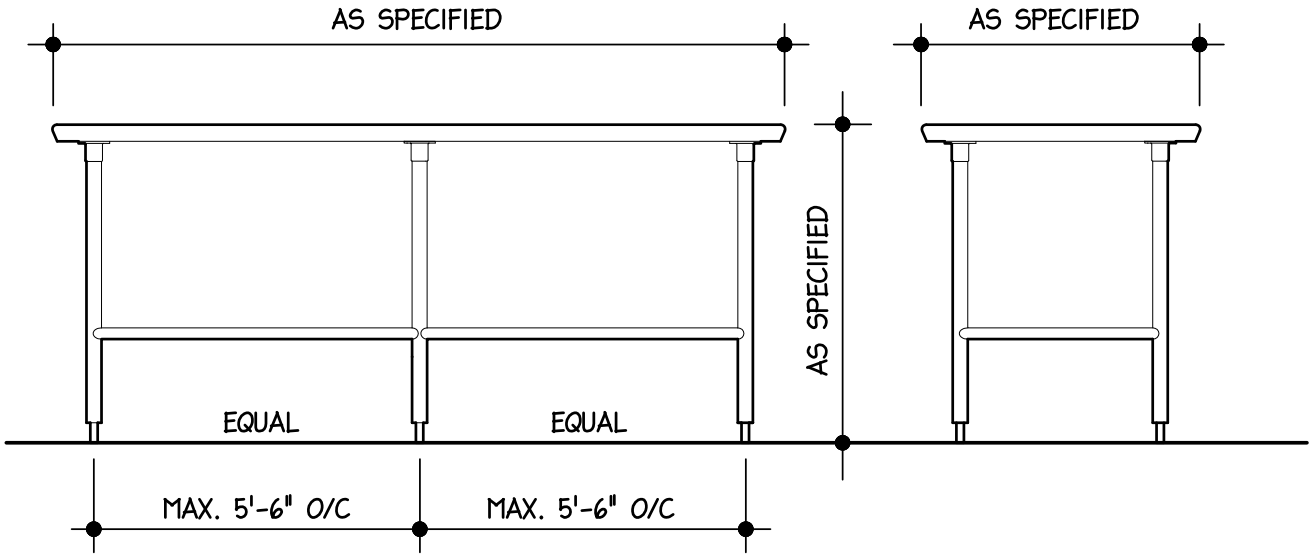

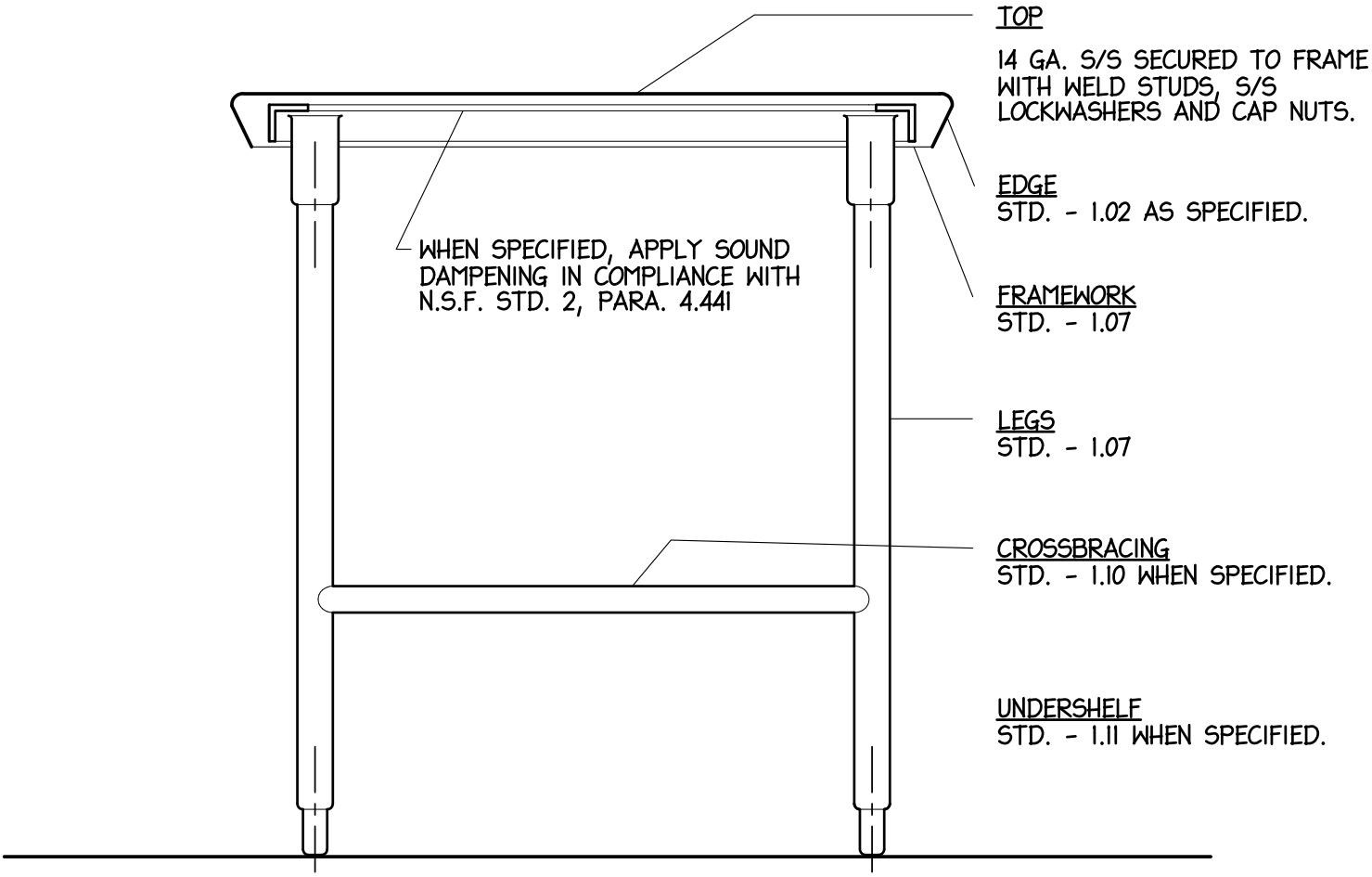

NYIKOS ASSOCIATES, INC. Food Facilities Design/Consulting	DESCRIPTION: **WORKTABLE**	STANDARD DTL: **2.01** PAGE: **114000-63**

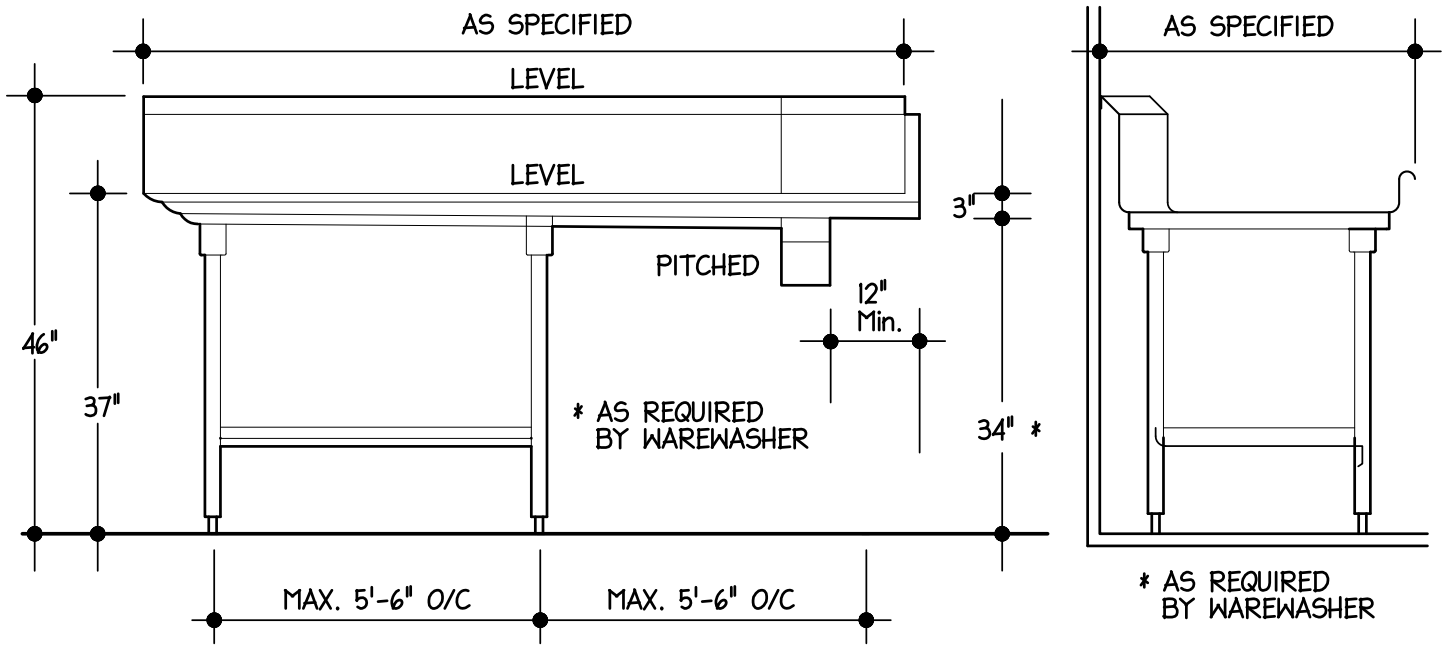

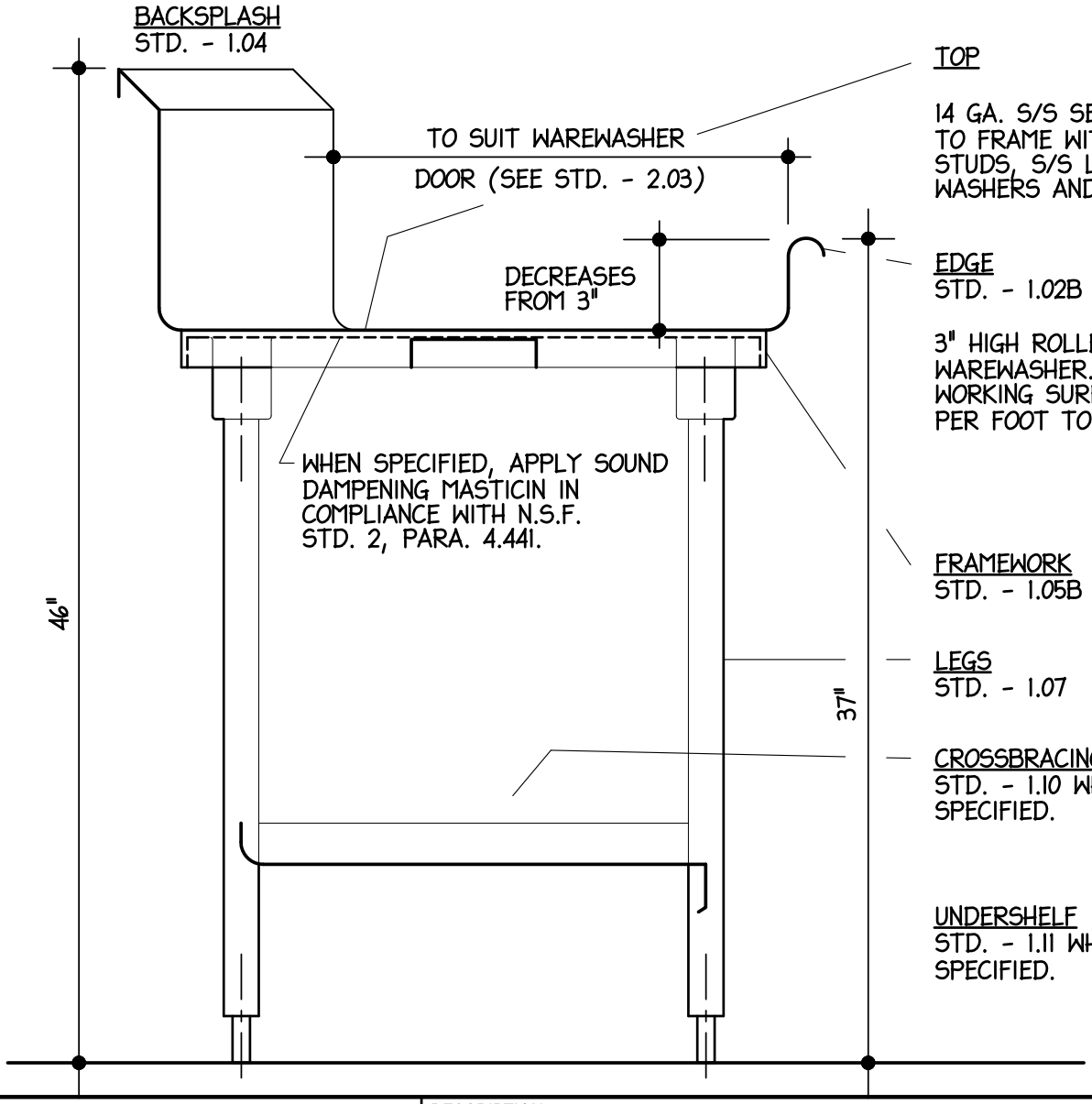

NYIKOS ASSOCIATES, INC. Food Facilities Design/Consulting	DESCRIPTION: **DISHTABLE**	STANDARD DTL: **2.02** PAGE: **114000-64**

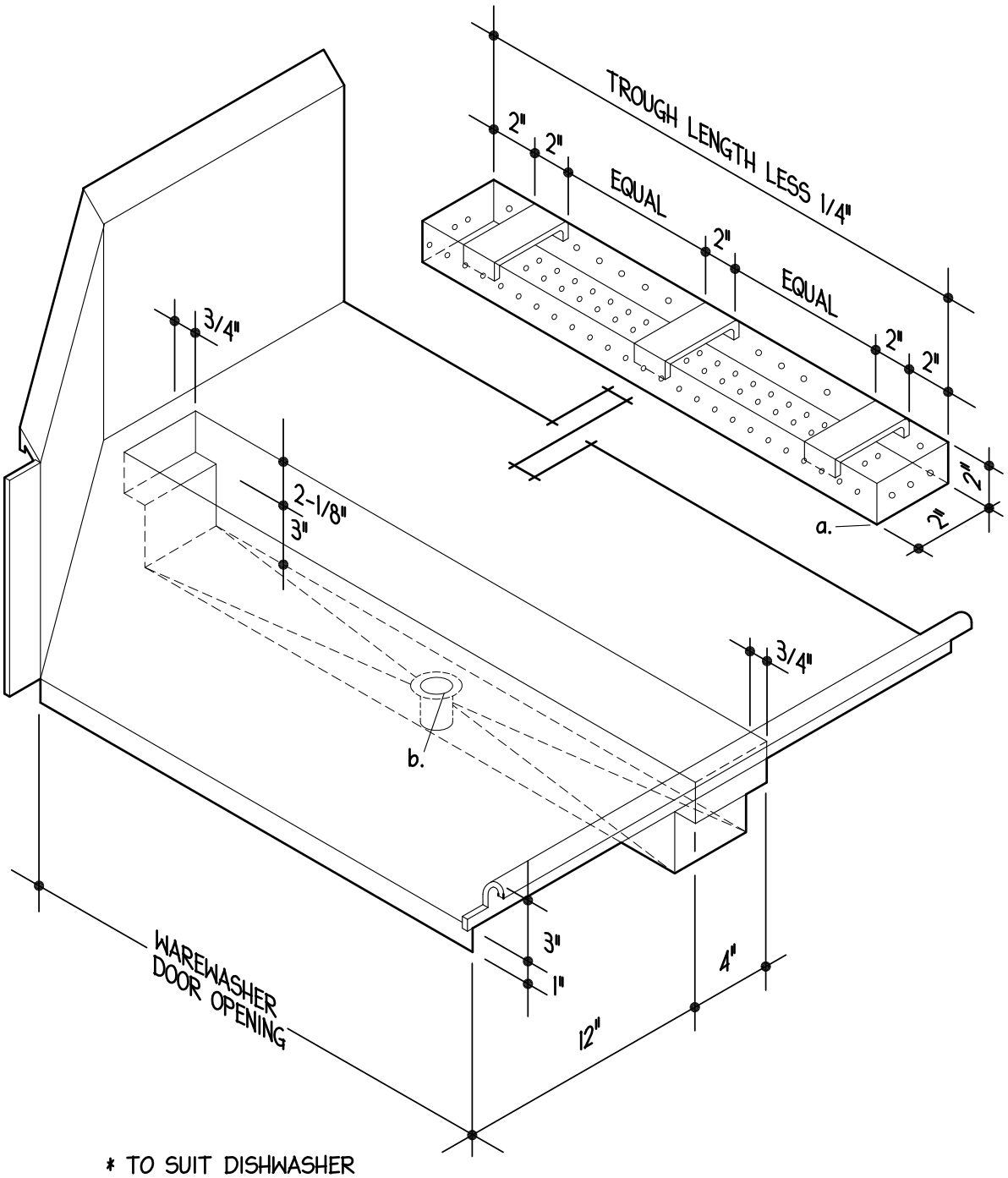

* TO SUIT DISHWASHER

a. BASKET - 16 GA. PERFORATED S/S, ALL WELDED CONSTRUCTION.

b. WASTE - 1-1/2" CHROME PLATED BRASS DRAIN -- STANDARD-KEIL #1816-1812-1368

NYIKOS ASSOCIATES, INC. Food Facilities Design/Consulting	DESCRIPTION: WAREWASHER CONNECTION AND TABLE TROUGH	STANDARD DTL: 2.03 PAGE: 114000-65

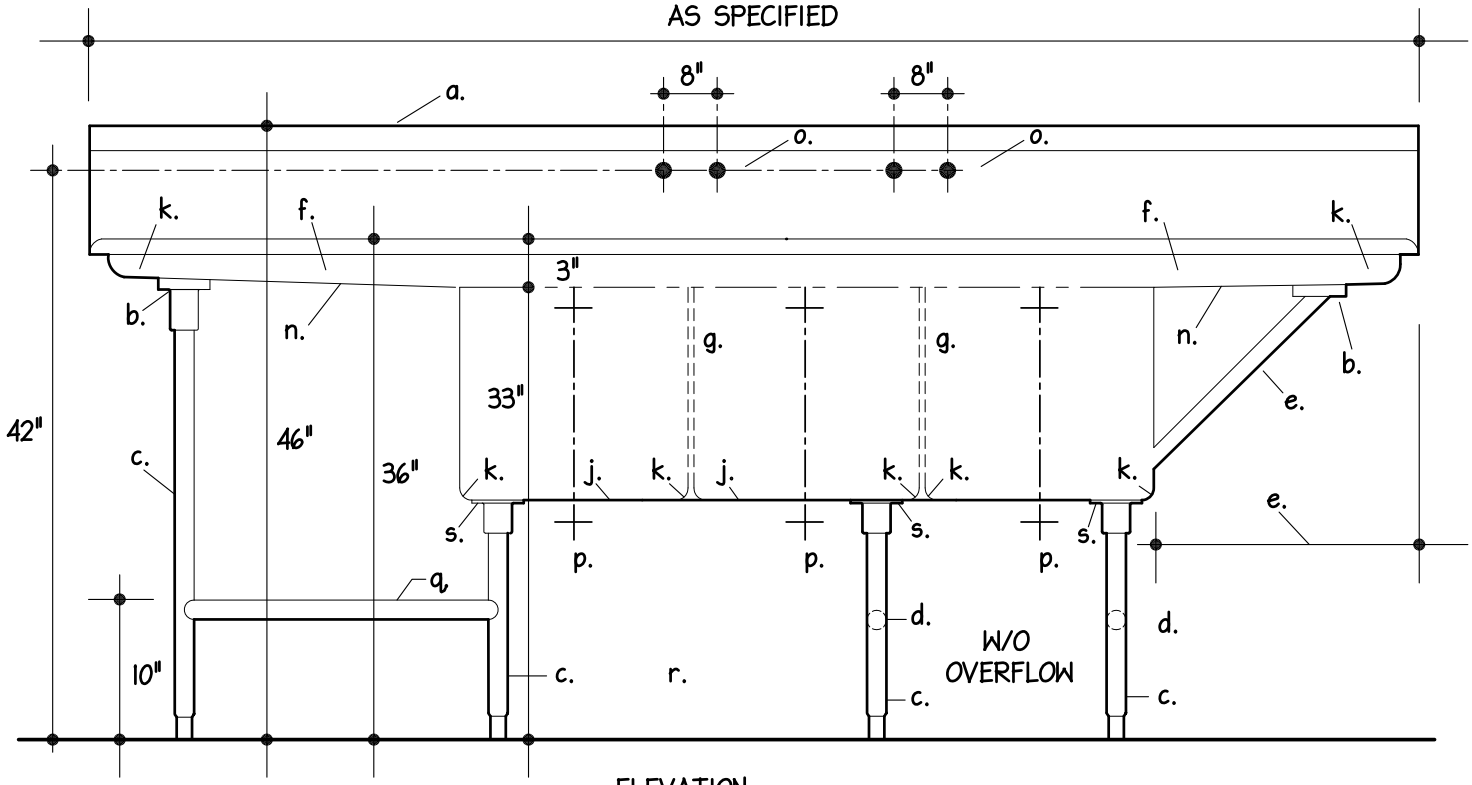

ELEVATION

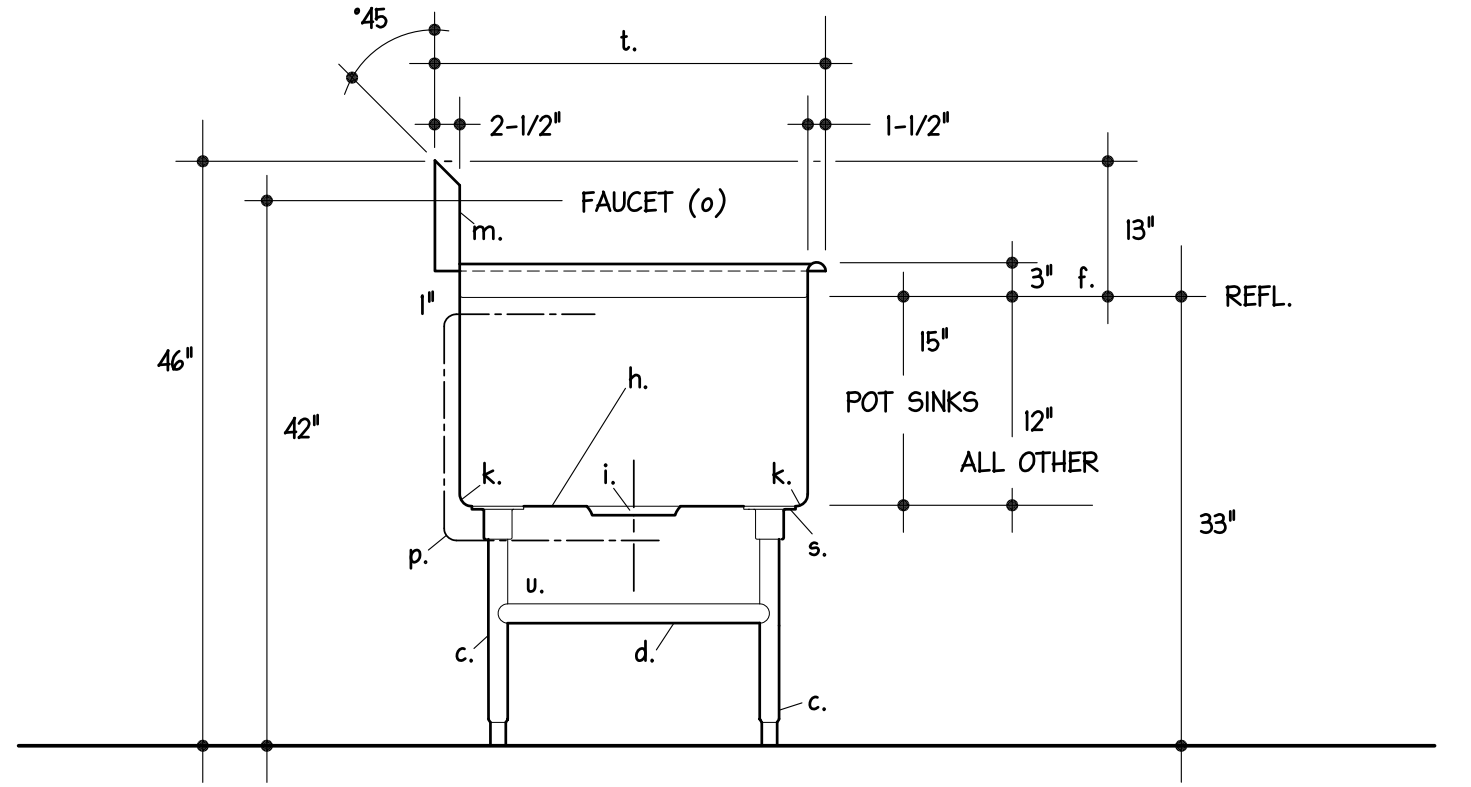

TYPICAL SECTION

a. MATERIAL - 14 GA. S/S.

b. STD. - 1.05c.

c. STD. - 1.07

d. STD. - 1.10

CONTINUED ON STD.- 3.01.1

NYIKOS ASSOCIATES, INC. Food Facilities Design/Consulting	DESCRIPTION: SINKS AND DRAINBOARDS	STANDARD DTL: 3.01 PAGE: 114000-66

e. DRAINBOARDS UP TO 24" IN LENGTH REQUIRE NO LEGS OR BRACES. DRAINBOARDS 25" TO 30" REQUIRE 1" O.D. 16 GA. S/S BRACE. DRAINBOARDS OVER 30" REQUIRE LEGS AND CHANNEL FRAMEWORK.

f. DRAINBOARDS SHALL PITCH TO SINK 1/8" PER FOOT OF LENGTH TO PROVIDE COMPLETE DRAINING WITHOUT POOLING. THE 3" HIGH RAISED ROLLED RIM AT THE SINK SHALL DECREASE IN HEIGHT TOWARD THE OUTER ENDS OF THE DRAINBOARD.

g. PARTITIONS BETWEEN COMPARTMENTS TO BE DOUBLE WALLED CONSTRUCTION WITH ROUNDED TOP, ALL WELDED INTEGRAL WITH SINK BODY.

h. BACK, BOTTOM, AND FRONT SHALL BE ONE CONTINUOUS PIECE WITH ENDS WELDED INTEGRAL, WITHOUT OVERLAPPING JOINTS OR OPEN SPACES, BETWEEN COMPARTMENTS.

i. WASTES SHALL BE SEATED IN DIE STAMPED DEPRESSIONS WITHOUT USE OF SOLDER, RIVETS OR WELDING. INSTALLED COMPONENTS SHALL BE FLUSH WITH SURROUNDING SURFACE.

j. EACH SINK COMPARTMENT TO BE PITCHED AND CREASED TO WASTE TO ASSURE COMPLETE DRAINING WITHOUT POOLING.

k. ENTIRE UNIT SHALL BE ALL WELDED COVE CORNERED CONSTRUCTION WITH VERTICAL AND HORIZONTAL AND INTERIOR CORNERS HAVING A 3/4" RADIUS.

l. STD.- 1.02 b EDGE.

m. STD. - 1.04a. BACKSPLASH.

n. UNDERSIDE OF DRAINBOARDS AND SINKS TO BE SPRAYED WITH SOUND DAMPENING IN COMPLIANCE WITH N.S.F. STD. 2 PARA 4.441 WHEN SPECIFIED.

o. FAUCETS - T¢S MODEL B-232 WITH AERATOR B-199, REMOVABLE MONEL SEATS AND 1/2" I.P.S. MALE INLETS.

p. WASTES - 2" NICKEL PLATED BRONZE ROTARY HANDLE WASTE S/S STRAINER PLATE WITH CHROME WITH CHROME PLATED BRASS CONNECTED OVERFLOW, STANDARD- KIEL HARDWARE MFG. CO. #1770-1015-1000.

q, REAR CROSS BRACING ONLY.

r. OMIT FRONT AND REAR LENGTHWISE CROSSBRACIG UNDER SINKS.

s. 12 GAUGE STAINLESS STEEL 6"x 6" TRIANGULAR SUPPORT PLATE WELDED TO UNDERSIDE OF SINKS.

t. WIDTH AS SPECIFIED.

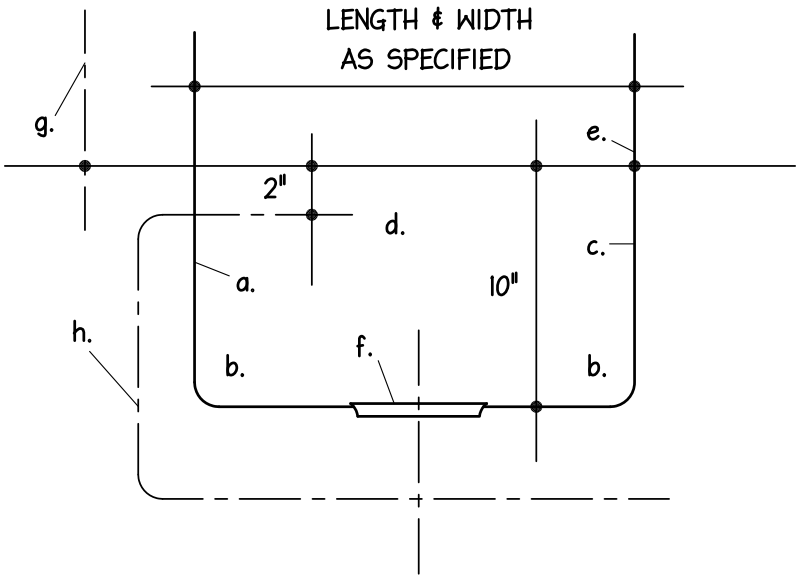

TYPICAL SECTION

a. MATERIAL - 14 GA. S/S

b. ENTIRE UNIT SHALL BE ALL WELDED COVE CORNERED CONSTRUCTION WITH VERTICAL AND HORIZONTAL AND INTERIOR CORNERS HAVING A 3/4" RADIUS.

c. TWO SIDES AND BOTTOM SHELL BE ONE CONTINUOUS PIECE WITH ENDS WELDED INTEGRAL WITHOUT OVERLAPPING JOINTS.

d. PARTITIONS BETWEEN COMPARTMENTS TO BE DOUBLE WALLED CONSTRUCTION WITH ROUNDED TOP, ALL WELDED INTEGRAL WITH SINK.

e. FULLY WELD SINK TO TOP WITHOUT OVERLAPPING JOINTS.

f. WASTES SHALL BE SEATED IN DIE STAMPED DEPRESSIONS WITHUOT USE OF SOLDER RIVETS OR WELDING . INSTALLED COMPONENTS SHALL BE FLUSH WITH SURROUNDING SURFACE.

g. FAUCET - T¢S MODEL B-222 FAUCET WITH B-199 AERATOR, REMOVABLE MONEL SEATS AND 1/2" IPS MALE INLETS.

h. WASTES - 1-1/2" NICKEL PLATED BRONZE ROTARY HANDLE WASTE AND S/S STRAINER PLATE WITH CHROME PLATED BRASS CONNECTED OVERFLOW, STANDARD-KEIL HARDWARE COMPANY NO. #1770-1015-1000.

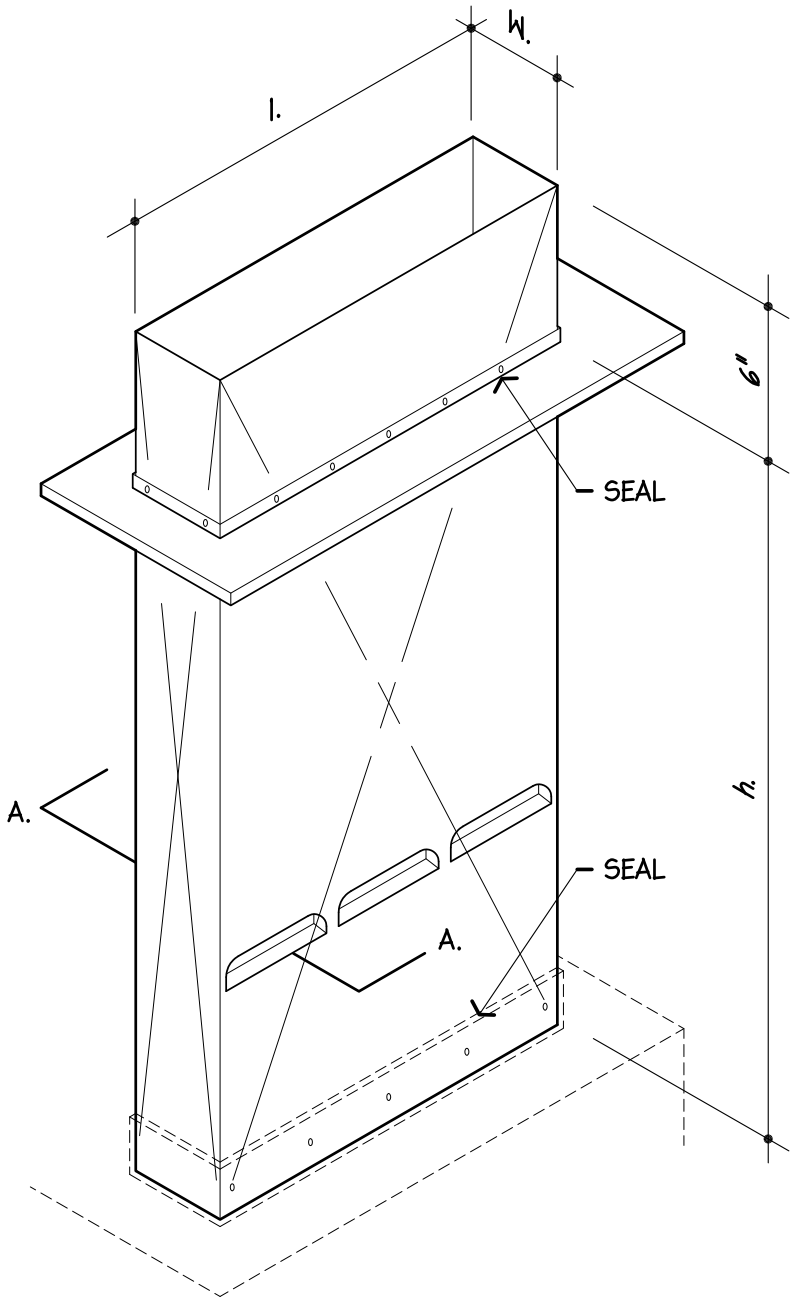

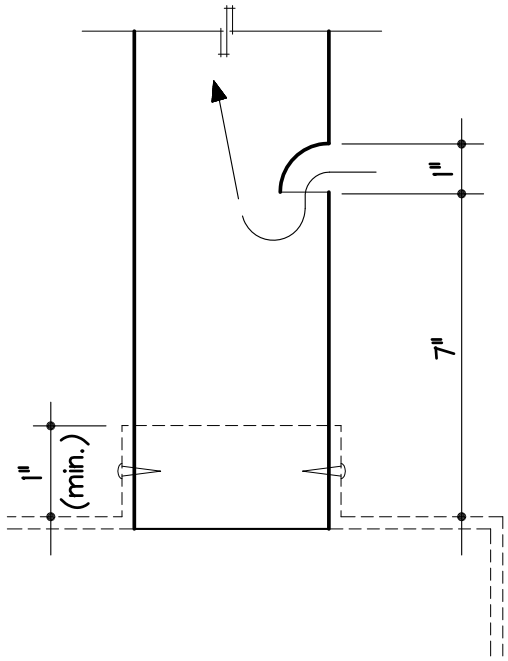

SECTION A-A

a. DUCT-18. GA. S/S WITH (3) 1" x 4" LOUVERS DIE STAMPED INWARD TO ALLOW FLOW OF COOL AIR FROM DISHWASHER. DUCT TO FIT TIGHT TO INSIDE OF VENT. SECURE WITH S/S SCREWS AND SEAL WITH SILICONE.

b. CEILING TRIM-18 GA. S/S, 1" x 2" ANGLE TRIM SECURED TO DUCT WITH SILICONE. PERIMETER CRIMPED TO PROVIDE A HUG-TIGHT EDGE TO CLG.

h. VERIFY. DUCTS OVER 60" SHALL BE CROSS CREASED FOR RIGIDITY.

l. ¢ w. 1. DISHWASHER EXHAUST REQUIREMENTS. INCREASE DISHWASHER MANUFACTURERS CFM EXHAUST REQUIREMENTS FOR EACH VENT BY 50% TO ALLOW FOR AIR INDUCTION THROUGH DUCT VENTS.

c. EXHAUST DAMPER REQUIREMENTS. WHEN D.W. VENTS ARE NOT EQUIPPED WITH DAMPERS, EACH DUCT SHALL BE PROVIDED WITH AN 18 GA. S/S DAMPER AND LOCKING QUADRANT LOCATED BETWEEN THE LOUVERS AND D.W. VENT.

(END OF SECTION 114000)

SECTION 122113 - HORIZONTAL LOUVER BLINDS

PART 1 - GENERAL

1.1 RELATED DOCUMENTS

A. Drawings and general provisions of the Contract, including General and Supplementary Conditions and Division 01 Specification Sections, apply to this Section.

1.2 SUMMARY

A. Section Includes:

1. Horizontal louver blinds with aluminum slats.

B. Related Requirements:

1. Section 061053 "Miscellaneous Rough Carpentry" for wood blocking and grounds for mounting horizontal louver blinds and accessories.

1.3 ACTION SUBMITTALS

A. Product Data: For each type of product.

B. Shop Drawings: Show fabrication and installation details for horizontal louver blinds.

C. Samples: For each exposed product and for each color and texture specified, 12 inches (300 mm) long.

D. Window-Treatment Schedule: For horizontal louver blinds. Use same designations indicated on Drawings.

1.4 INFORMATIONAL SUBMITTALS

A. Product Certificates: For each type of horizontal louver blind.

B. Product Test Reports: For each type of horizontal louver blind, for tests performed by a qualified testing agency.

1.5 CLOSEOUT SUBMITTALS

A. Maintenance Data: For horizontal louver blinds to include in maintenance manuals.

1.6 MAINTENANCE MATERIAL SUBMITTALS

A. Furnish extra materials, from the same product run, that match products installed and that are packaged with protective covering for storage and identified with labels describing contents.

1. Horizontal Louver Blinds: Full-size units equal to 5 percent of quantity installed for each size, color, texture, pattern, and gloss indicated, but no fewer than two units.

1.7 DELIVERY, STORAGE, AND HANDLING

A. Deliver horizontal louver blinds in factory packages, marked with manufacturer, product name, and location of installation using same designations indicated on Drawings.

1.8 FIELD CONDITIONS

A. Environmental Limitations: Do not install horizontal louver blinds until construction and wet and finish work in spaces, including painting, is complete and dry and ambient temperature and humidity conditions are maintained at the levels indicated for Project when occupied for its intended use.

B. Field Measurements: Where horizontal louver blinds are indicated to fit to other construction, verify dimensions of other construction by field measurements before fabrication and indicate measurements on Shop Drawings. Allow clearances for operating hardware of operable glazed units through entire operating range. Notify Architect of installation conditions that vary from Drawings. Coordinate fabrication schedule with construction progress to avoid delaying the Work.

PART 2 - PRODUCTS

2.1 MANUFACTURERS

A. Source Limitations: Obtain horizontal louver blinds from single source from single manufacturer.

2.2 HORIZONTAL LOUVER BLINDS, ALUMINUM SLATS

A. Manufacturers: Subject to compliance with requirements, provide products by one of the following:

1. Hunter Douglas Contract.
2. Levolor Contract; a Newell Rubbermaid company.
3. Springs Window Fashions.

B. Slats: Aluminum; alloy and temper recommended by producer for type of use and finish indicated; with crowned profile and radius corners.

1. Width: 1 inch (25 mm).
2. Thickness: Manufacturer's standard.
3. Spacing: Not less than every 0.77 inch.
4. Finish: Ionized antistatic, dust-repellent, baked polyester finish.

C. Headrail: Formed steel or extruded aluminum; long edges returned or rolled. Headrails fully enclose operating mechanisms on three sides.

1. Capacity: One blind per headrail unless otherwise indicated.
2. Ends: Manufacturer's standard.
3. Manual Lift Mechanism:

a. Lift-Cord Lock: Variable; stops lift cord at user-selected position within blind full operating range.
b. Operator: Extension of lift cord(s) through lift-cord lock mechanism to form cord pull.

4. Manual Tilt Mechanism: Enclosed worm-gear mechanism and linkage rod that adjusts ladders.

a. Tilt: Full.
b. Operator: Clear-plastic wand.
c. Over-Rotation Protection: Manufacturer's detachable operator or slip clutch to prevent over rotation of gear.

5. Manual Lift-Operator and Tilt-Operator Lengths: Length required to extend to 48 inches (1219 mm) above floor level when blind is fully closed.
6. Manual Lift-Operator and Tilt-Operator Locations: Right side and left side of headrail, respectively unless otherwise indicated.
7. Integrated Headrail/Valance: Curved face.

D. Bottom Rail: Formed-steel or extruded-aluminum tube that secures and protects ends of ladders and lift cords and has plastic- or metal-capped ends.

1. Type: Top contoured to match crowned shape of slat.

E. Lift Cords: Manufacturer's standard braided cord.

F. Ladders: Evenly spaced across headrail at spacing that prevents long-term slat sag.

1. Type: Braided cord.

G. Valance: Manufacturer's standard.

H. Mounting Brackets: With spacers and shims required for blind placement and alignment indicated.

1. Type: Wall, overhead, or end, as required by existing conditions, permitting removal and replacement without damaging blind or adjacent surfaces and finishes.
2. Intermediate Support: Provide intermediate support brackets to produce support spacing recommended by blind manufacturer for weight and size of blind.

I. Colors, Textures, Patterns, and Gloss:

1. Slats: As selected by Architect from manufacturer's full range.
2. Components: Provide rails, cords, ladders, and materials exposed to view matching or coordinating with slat color unless otherwise indicated.

2.3 HORIZONTAL LOUVER BLIND FABRICATION

A. Product Safety Standard: Fabricate horizontal louver blinds to comply with WCMA A 100.1 including requirements for corded, flexible, looped devices; lead content of components; and warning labels.

B. Unit Sizes: Fabricate units in sizes to fill window and other openings as follows, measured at 74 deg F (23 deg C):

1. Between (Inside) Jamb Installation: Width equal to jamb-to-jamb dimension of opening in which blind is installed less 1/4 inch (6 mm) per side or 1/2 inch (13 mm) total, plus or minus 1/8 inch

(3.1 mm). Length equal to head-to-sill dimension of opening in which blind is installed less 1/4 inch (6 mm), plus or minus 1/8 inch (3.1 mm).

2. Outside of Jamb Installation: Width and length as indicated, with terminations between blinds of end-to-end installations at centerlines of mullion or other defined vertical separations between openings.

C. Concealed Components: Noncorrodible or corrosion-resistant-coated materials.

1. Lift-and-Tilt Mechanisms: With permanently lubricated moving parts.

D. Mounting and Intermediate Brackets: Designed for removal and reinstallation of blind without damaging blind and adjacent surfaces, for supporting blind components, and for bracket positions and blind placement indicated.

E. Installation Fasteners: No fewer than two fasteners per bracket, fabricated from metal noncorrosive to brackets and adjoining construction; type designed for securing to supporting substrate; and supporting blinds and accessories under conditions of normal use.

F. Color-Coated Finish:

1. Metal: For components exposed to view, apply manufacturer's standard baked finish complying with manufacturer's written instructions for surface preparation including pretreatment, application, baking, and minimum dry film thickness.

PART 3 - EXECUTION

3.1 EXAMINATION

A. Examine substrates, areas, and conditions, with Installer present, for compliance with requirements for installation tolerances, operational clearances, and other conditions affecting performance.

1. Proceed with installation only after unsatisfactory conditions have been corrected.

3.2 INSTALLATION

A. Install horizontal louver blinds level and plumb, aligned and centered on openings, and aligned with adjacent units according to manufacturer's written instructions.

1. Locate so exterior slat edges are not closer than 1 inch (25 mm) from interior faces of glass and not closer than 1/2 inch (13 mm) from interior faces of glazing frames through full operating ranges of blinds.
2. Install mounting and intermediate brackets to prevent deflection of headrails.
3. Install with clearances that prevent interference with adjacent blinds, adjacent construction, and operating hardware of glazed openings, other window treatments, and similar building components and furnishings.

B. Electrical Connections: Connect motorized operators to building electrical system.

3.3 ADJUSTING

A. Adjust horizontal louver blinds to operate free of binding or malfunction through full operating ranges.

3.4 CLEANING AND PROTECTION

A. Clean horizontal louver blind surfaces after installation according to manufacturer's written instructions.

B. Provide final protection and maintain conditions in a manner acceptable to manufacturer and Installer and that ensures that horizontal louver blinds are without damage or deterioration at time of Substantial Completion.

C. Replace damaged horizontal louver blinds that cannot be repaired in a manner approved by Architect before time of Substantial Completion.

END OF SECTION 122113

SECTION 123200 - INSTITUTIONAL CASEWORK

PART 1 - GENERAL

1.1 RELATED DOCUMENTS

A. Drawings and general provisions of the Contract, including General and Supplementary Conditions and Division 1 Specification Sections, apply to this Section.

1.2 SUMMARY

A. This Section includes the following:

1. Plastic-laminate-faced wood cabinets of stock design.
2. Plastic-laminate countertops.
3. Wall shelving.

B. Related Sections include the following:

1. Division 6 Section "Rough Carpentry" for wood blocking for anchoring institutional casework.
2. Division 9 Section "Gypsum Board Assemblies" for reinforcements in gypsum board partitions for anchoring institutional casework.
3. Division 9 Section "Resilient Wall Base and Accessories" for resilient base applied to institutional casework.
4. Division 22 for Mechanical furnishing, installation and hook-up of sinks, fixtures, outlets, strainers, tailpieces, traps, vacuum breakers, stops, etc. Sink cut-outs shall be done by Casework Contractor. Furnishing, installation and final connections of ductwork to range hoods shall be by Mechanical Contractor.
5. Division 26 for Electrical furnishing, installation and final connections of wiring, conduit and electrical items within casework shall be performed by the Electrical Contractor.

1.3 DEFINITIONS

A. Exposed Portions of Cabinets: Surfaces visible when doors and drawers are closed, including bottoms of cabinets more than 48 inches above floor, and surfaces visible in open cabinets.

B. Semi exposed Portions of Cabinets: Surfaces behind opaque doors, such as interiors of cabinets, shelves, dividers, interiors and sides of drawers, and interior faces of doors. Tops of cases 78 inches or more above floor are defined as semi exposed.

C. Concealed Portions of Cabinets: Surfaces not usually visible after installation, including sleepers, web frames, dust panels, and ends and backs that are placed directly against walls or other cabinets.

1.4 SUBMITTALS

A. Product Data: For each type of product indicated.

B. Shop Drawings: Show fabrication and installation details for institutional casework. Include plans, elevations, sections, details, and attachments to other Work.

C. Samples for Initial Selection: For cabinet finishes and for each type of top material indicated.

D. Samples for Verification: 6-inch- square Samples for each type of finish, including top material and the following:

1.5 QUALITY ASSURANCE

A. Installer Qualifications: An authorized representative of institutional casework manufacturer for installation and maintenance of units required for this Project.

B. Source Limitations: Obtain institutional casework through one source from a single manufacturer.

C. Quality Standard: Unless otherwise indicated, comply with AWI's "Architectural Woodwork Quality Standards," Section 1600.

1. Provide AWI Quality Certification Program certificate indicating that institutional casework complies with requirements.

D. Product Designations: Drawings indicate sizes, configurations, and finish material of institutional casework by referencing designated manufacturer's catalog numbers. Other manufacturers' casework of similar sizes and door and drawer configurations, of same finish material, and complying with the Specifications may be considered. Refer to Division 1 Section "Product Requirements."

1.6 DELIVERY, STORAGE, AND HANDLING

A. Deliver institutional casework only after painting, utility roughing-in, and similar operations that could damage, soil, or deteriorate casework have been completed in installation areas. If casework must be stored in other than installation areas, store only in areas where environmental conditions meet requirements specified in "Project Conditions" Article.

B. Keep finished surfaces covered with polyethylene film or other protective covering during handling and installation.

1.7 PROJECT CONDITIONS

A. Environmental Limitations: Do not deliver or install institutional casework until building is enclosed, wet work is complete, and HVAC system is operating and maintaining temperature and relative humidity at occupancy levels during the remainder of the construction period.

B. Field Measurements: Where institutional casework is indicated to fit to other construction, verify dimensions by field measurements before fabrication and indicate measurements on Shop Drawings.

1.8 COORDINATION

A. Coordinate layout and installation of metal framing and reinforcements in gypsum board assemblies for support of institutional casework.

B. Coordinate layout and installation of associated Mechanical and Electrical items for integration with institutional casework.

1.9 WARRANTY

A. Special Warranty: Manufacturer's standard form in which manufacturer agrees to repair or replace components of institutional casework that fail in materials or workmanship within specified warranty period. Failures include, but are not limited to, the following:

1. Delamination of components or other failures of glue bond.
2. Warping of components.
3. Failure of operating hardware.
4. Deterioration of finishes.

B. Warranty Period: Five years from date of Substantial Completion.

1.10 EXTRA MATERIALS

A. Furnish complete touchup kit for each type and finish of institutional casework provided. Include scratch fillers, stains, finishes, and other materials necessary to perform permanent repairs to damaged casework finish.

PART 2 - PRODUCTS

2.1 MANUFACTURERS

A. Manufacturers: Subject to compliance with requirements, provide products by one of the following:

B. Basis-of-Design Product: The design for institutional casework is based on **TMI Systems Design Corp**., see the Casework Schedule for detailed designations and model numbers. Subject to compliance with requirements, provide the named product or a comparable product by one of the following:

1. Plastic-Laminate-Faced Institutional Casework:

   a. Case Systems, Inc.
   b. Fisher Hamilton Inc.
   c. Hausmann Industries, Inc.
   d. LSI Corporation of America, Inc.
   e. Norlab, Inc.
   f. Polyvision Corporation
   g. Terrill Manufacturing Company.
   h. TMI Systems Design Corp.
   i. Southside Manufacturing
   j. Stevens Industries

2. Plastic-Laminate Material:

   a. Formica Corporation.
   b. International Paper; Decorative Products Div.
   c. Laminart.
   d. Pioneer Plastics Corp.
   e. Wilsonart International; Div. of Premark International, Inc.

3. Solid-Surfacing Material:

   a. Division 6 Section “Interior Architectural Woodwork.”

2.2 MATERIALS

A. General:

1. Certified Wood Materials: Provide cabinets made from wood and wood-based materials that are produced from wood obtained from forests certified by an FSC-accredited certification body to comply with FSC 1.2, "Principles and Criteria."
2. Adhesives: Do not use adhesives that contain urea formaldehyde.
3. Maximum Moisture Content for Lumber: 7 percent for hardwood and 12 percent for softwood.
4. Hardwood Plywood: HPVA HP-1, either veneer core or particle core, unless otherwise indicated, made without urea formaldehyde.
5. Softwood Plywood: DOC PS 1.
6. Particleboard: ANSI A208.1, Grade M-2-Exterior Glue.

7. Medium-Density Fiberboard: ANSI A208.2, Grade MD-Exterior Glue.
8. Hardboard: AHA A135.4, Class 1 Tempered.
9. Plastic Laminate: High-pressure decorative laminate complying with NEMA LD 3.
10. Edgebanding for Plastic Laminate: Rigid PVC extrusions, through color with satin finish, 3 mm thick at doors and drawer fronts, 1 mm thick elsewhere.

B. Exposed Cabinet Materials:

1. Plastic Laminate: Type VGS.

a. Unless otherwise indicated, provide plastic laminate for exposed surfaces.
b. Provide plastic laminate for doors and drawer fronts.

C. Semi exposed Cabinet Materials:

1. Melamine-Faced Particleboard: Particleboard with decorative surface of thermally fused, melamine-impregnated web and complying with LMA SAT-1.

a. Provide melamine-faced particleboard for semiexposed surfaces, unless otherwise indicated.
b. Color Options to match Wilsonart Frosty White, Light Beige and Dove Grey.

2. Metal for Steel Drawer Pans: Cold-rolled, carbon-steel sheet complying with ASTM A 366/A 366M; matte finish; suitable for exposed applications.

D. Concealed Cabinet Materials:

1. Plastic Laminate: Type BKL.

2.3 DESIGN, COLOR, AND FINISH

A. Design: Provide institutional casework of the following design:

1. Flush overlay with wire pulls.

2. Architect to select up to 3 different color selections for Plastic Laminate, Melamine, PVC edging and Solid Surfacing materials.

B. Melamine-Faced Particleboard Colors, Patterns, and Finishes: As selected by Architect from casework manufacturer's full range.

C. Plastic-Laminate Colors, Patterns, and Finishes: As selected by Architect from plastic-laminate manufacturer's full range.

2.4 CABINET FABRICATION

A. Plastic-Laminate-Faced Cabinet Construction:

1. Bottoms and Ends of Cabinets, Shelves, and Tops of Wall Cabinets and Tall Cabinets: 3/4-inch particleboard, plastic-laminate faced on exposed surfaces, melamine faced on semi exposed surfaces.
2. Backs of Cabinets: 1/2-inch particleboard, plastic-laminate faced on exposed surfaces, melamine faced on semi exposed surfaces.
3. Drawer Fronts: 3/4-inch particleboard, plastic-laminate faced on both sides.
4. Drawer Sides and Backs: 1/2-inch melamine-faced particleboard, with glued dovetail or multiple-dowel joints.

5. Drawer Bottoms: 1/4-inch melamine-faced particleboard glued and dadoed into front, back, and sides of drawers. Use 1/2-inch material for drawers more than 24 inches wide.
6. Drawer Bodies: Steel drawer pans formed from 0.0359-inch- thick metal, metallic phosphate treated, and finished with manufacturer's standard 2-coat, baked-enamel finish consisting of prime coat and thermosetting topcoat with a minimum dry film thickness of 1 mil for topcoat and 2 mils for system.
7. Doors: 3/4-inch particleboard or medium-density fiberboard, plastic-laminate faced on both sides.

B. Filler Strips: Provide as needed to close spaces between cabinets and walls, ceilings, and indicated equipment. Fabricate from same material and with same finish (for exposed surfaces) as cabinets.

2.5 CASEWORK HARDWARE

A. Hardware, General: Provide manufacturer's standard satin-finish, commercial-quality, heavy-duty hardware complying with requirements indicated.

1. Use threaded metal or plastic inserts with machine screws for fastening to particleboard except where hardware is through-bolted from back side.

B. Frameless Concealed Hinges (European Type): BHMA A156.9, B01602, 120 degrees of opening.

C. Pulls: Solid stainless-steel wire pulls, fastened from back with two screws. For sliding doors, provide recessed stainless-steel flush-pulls. Provide 2 pulls for drawers more than 24 inches wide.

D. Door Catches: Powder-coated, nylon-roller spring catch or dual, self-aligning, permanent magnet catch. Provide 2 catches on doors more than 48 inches high.

E. Drawer Slides: Powder-coated, metal-channel, self-closing drawer slides, designed to prevent rebound when drawers are closed, with nylon-tired, ball-bearing rollers, and complying with BHMA A156.9, Type B05091, and rated for the following loads:

1. Box Drawer Slides: 100 lbf.
2. File and Paper Drawer Slides: 150 lbf.
3. Keyboard Slide: 100 lbf.

F. Drawer and Cupboard Locks: Cylindrical (cam) type, 5-pin tumbler, brass with chrome-plated finish, complying with BHMA A156.11, Grade 1.

1. Provide a minimum of two keys per lock and six master keys.
2. Provide locks on all doors and drawers.

G. Sliding-Door Hardware Sets: Manufacturer's standard, to suit type and size of sliding-door units.

H. Adjustable Shelf Supports: 2-pin locking plastic shelf rests complying with BHMA A156.9, Type B04013.

I. Adjustable Shelf Supports: Mortise-type, powder-coated steel standards and shelf rests complying with BHMA A156.9, Types B04071 and B04091.

J. Grommets

2.6 COUNTERTOPS

A. Countertops, General: Provide smooth, clean exposed tops and edges in uniform plane free of defects. Provide front and end overhang of 1 inch over base cabinets.

B. Plastic-Laminate Tops: Plastic-laminate sheet, shop bonded with waterproof glue to both sides of 3/4-inch plywood or particleboard. Sand surfaces to which plastic laminate is to be bonded.

1. Plastic-Laminate Type for Flat Tops: HGS.
2. Plastic-Laminate Type for Formed Tops: HGP.
3. Plastic-Laminate Type for Backing: BKL.
4. Provide 1-mm PVC edging on front edge of top, on top edges of backsplashes and end splashes, and on ends of tops and splashes.
5. Construct top and backsplash from one piece of plastic laminate with rolled edges and coved intersection. Where indicated, provide separate end splashes fitted to top.
6. Use exterior plywood or phenolic-resin-bonded particleboard for countertops containing sinks.

C. Solid-Surfacing-Material Tops: Division 6 Section “Interior Architectural Woodwork.”

2.7 WALL SHELVING

A. Plastic-Laminate Shelving: Plastic-laminate sheet, Type HGL or HGP, shop bonded with waterproof glue to both sides of 3/4-inch particleboard plywood. Sand surfaces to which plastic laminate is to be bonded.

1. Shelf Thickness: 3/4 inch.
2. Edge Treatment: Finish both edges with rigid PVC T-molding, through color with satin finish.

B. Heavy-duty Adjustable Shelf Supports: Powder-coated steel standards and shelf brackets, complying with BHMA A156.9, Types B04102 and B04112, surface mounted.

PART 3 - EXECUTION

3.1 EXAMINATION

A. Examine areas, with Installer present, for compliance with requirements for installation tolerances, location of reinforcements, and other conditions affecting performance of institutional casework.

1. Proceed with installation only after unsatisfactory conditions have been corrected.

3.2 CASEWORK INSTALLATION

A. Install plumb, level, and true; shim as required, using concealed shims. Where institutional casework abuts other finished work, apply filler strips and scribe for accurate fit, with fasteners concealed where practical.

B. Base Cabinets: Set cabinets straight, level, and plumb. Adjust subtops within 1/16 inch of a single plane. Fasten cabinets to partition framing, wood blocking, or reinforcements in partitions with fasteners spaced 24 inches o.c. Bolt adjacent cabinets together with joints flush, tight, and uniform. Align similar adjoining doors and drawers to a tolerance of 1/16 inch.

1. Where base cabinets are not installed adjacent to walls, fasten to floor at toe space with fasteners spaced 24 inches o.c. Secure sides of cabinets to floor, where they do not adjoin other cabinets, with not less than two fasteners.

C. Wall Cabinets: Hang cabinets straight, level, and plumb. Adjust fronts and bottoms within 1/16 inch of a single plane. Fasten to hanging strips, masonry, partition framing, blocking, or reinforcements in partitions. Align similar adjoining doors to a tolerance of 1/16 inch.

1. Fasten through back, near top and bottom, at ends, and not more than 16 inches o.c. with No. 10 wafer-head screws sized for 1-inch penetration into wood framing, blocking, or hanging strips and toggle bolts through metal backing or metal framing behind wall finish.

D. Install hardware uniformly and precisely. Set hinges snug and flat in mortises, unless otherwise indicated. Adjust and align hardware so moving parts operate freely and contact points meet accurately. Allow for final adjustment after installation.

E. Adjust casework and hardware so doors and drawers operate smoothly without warp or bind. Lubricate operating hardware as recommended by manufacturer.

3.3 INSTALLATION OF TOPS

A. Field Jointing: Where possible make in the same manner as shop jointing, using dowels, splines, adhesives, and fasteners recommended by manufacturer. Prepare edges to be joined in shop so Project-site processing of top and edge surfaces is not required. Locate field joints where shown on Shop Drawings.

1. Secure field joints in plastic-laminate countertops with concealed clamping devices located within 6 inches of front and back edges and at intervals not exceeding 24 inches. Tighten according to manufacturer's written instructions to exert a constant, heavy-clamping pressure at joints.

B. Secure tops to cabinets with Z-type fasteners or equivalent, using two or more fasteners at each front, end, and back.

C. Abut top and edge surfaces in one true plane, with internal supports placed to prevent deflection.

D. Secure backsplashes to tops with concealed metal brackets at 16 inches o.c. and walls with adhesive.

E. Seal junctures of top, splash, and walls with mildew-resistant silicone sealant or another permanently elastic sealing compound recommended by countertop material manufacturer.

3.4 INSTALLATION OF SHELVING

A. Securely fasten adjustable shelving supports to partition framing, wood blocking, or reinforcements in partitions.

B. Install shelf standards plumb and at heights to align shelf brackets for level shelves. Install shelving level and straight, closely fitted to other work where indicated.

3.5 CLEANING AND PROTECTING

A. Repair or remove and replace defective work as directed on completion of installation.

B. Clean finished surfaces, touch up as required, and remove or refinish damaged or soiled areas to match original factory finish, as approved by Architect.

C. Protection: Provide 6-mil plastic or other suitable water-resistant covering over countertop surfaces. Tape to underside of countertop at a minimum of 48 inches o.c. Remove protection at Substantial Completion.

END OF SECTION 123200