TABLE OF CONTENTS

Alamo Industrial.....2

Deere and Company.....134

Land Pride.....2133

Toro Company.....2295

Vermeer.....2323

ALAMO® INDUSTRIAL

BUILT SHARPER®

WHOLEGOODS PRICING

NJPA

National Joint Powers Alliance

RFP #070313

Universal Line

Effective February 15, 2013

Universal Line Price Book

Table of Contents

Switchblade	This Series Designated for Grounds Maintenance Contract (RFP# 070313)
Switchblade- Mount Kits	This Series Designated for Grounds Maintenance Contract (RFP# 070313)
74" Super Heavy Duty (SHD)- Flail Mowers	This Series Designated for Grounds Maintenance Contract (RFP# 070313)
88" Super Heavy Duty (SHD)- Flail Mowers	This Series Designated for Grounds Maintenance Contract (RFP# 070313)
96" Super Heavy Duty (SHD)- Flail Mowers	This Series Designated for Grounds Maintenance Contract (RFP# 070313)
RX- Standard Duty Lift -Type Rotary Mowers	This Series Designated for Grounds Maintenance Contract (RFP# 070313)
RX- Standard Duty Pull -Type Rotary Mowers	This Series Designated for Grounds Maintenance Contract (RFP# 070313)
RX- Heavy Duty Series Lift -Type Rotary Mowers	This Series Designated for Grounds Maintenance Contract (RFP# 070313)
Eagle Mechanical Flex Wing Mowers	This Series Designated for Grounds Maintenance Contract (RFP# 070313)
Exten-A-Kut II Rotary Mowers	This Series Designated for Grounds Maintenance Contract (RFP# 070313)
Grass King Flail Mowers	This Series Designated for Grounds Maintenance Contract (RFP# 070313)
McConnel Power Arm (PA)	This Series Designated for Grounds Maintenance Contract (RFP# 070313)

SWITCHBLADE

5', 6' Sickle Bar Mower

F.O.B. Seguin, TX

STANDARD SPECIFICATIONS

- Full Hydraulic Drive of Cutter Knife
- Hydraulically Actuated Breakaway
- Hydraulic Lift and Tilt
- Knife Speed Governor
- 3" Heavy Duty Industrial Rock Guards
- Reversible Hydraulic Motor
- Safety Transport Locks
- Self-Contained Hydraulics
- Cutting Capacity: 1/2" diameter material
- Tractor Req: Min. 3,000 lbs. and a 25 HP rating

PRODUCT ORDER CODE	DESCRIPTION	APPROX. WEIGHT		LIST PRICE
SWITCHBLADE BASE UNIT *(One Choice Required)*				
04116007	5' Switchblade Single RH w/ Serrated Knives	709		12,171
04117207	6' Switchblade Single RH w/ Serrated Knives	723		12,422
MOUNT KIT *(One Choice Required)* *See Mount Kit Page for Descriptions and Part Numbers*				
OPTIONS				
02974374	Additional Operators and Parts Manuals (Hard Copy)			51
02986457	Additional Operators, Parts & Service Manuals (CD Format)			51
0487100	Knife Holder Brackets (Order Quantity 2 per Unit)	9		125
02986583	Case-IH Farmall U & NH T5000 Series Pump Guard Kit			296
02977682	Case-IH JX-C & NH TN-A / T4000 Series Pump Guard Kit			296
02982781	Case-IH JX-U & NH TL-A Series Pump Guard Kit			296
02983392	John Deere 5105/5205 Pump Guard Kit			296
02985461	John Deere 5220/5320 & 5E Series Pump Guard Kit			296
02983480	John Deere 5025 / 5E Limited & 5M Series Pump Guard Kit			296
02988134	Kubota M5040/M6040/M7040 Pump Guard Kit			296
0800000	Factory Mount			1,801
02991513	Special Mower Paint			349
02991505	Additional 12 Month Warranty			1,880

Alamo Industrial

(800) 882-5762

SWITCHBLADE

5', 6' MOUNT KIT OPTIONS

F.O.B. Seguin, TX

TRACTOR DESCRIPTION	SUBFRAME KIT	HYDRAULIC KIT	MAX. TIRE SIZE FRONT	MAX. TIRE SIZE REAR	LIST PRICE
Case-IH					
Case-IH Farmall 85U/95U/105U Cab/2&4wd	02986587	02986588	11.2-24	16.9-30	4,847
Case-IH JX1060C/1070C/1075C Cab/2&4wd	02980118	02980119	11.2-24	16.9-30	4,847
Case-IH JX1080U/1090U/1100U ROPS/2&4wd	02982821	02982819	11.2-24	16.9-30	4,847
Case-IH JX1080U/1090U/1100U Cab/2&4wd	02982774	02982768	11.2-24	16.9-30	4,847
John Deere					
John Deere 5045E/5055E/5065E/5075E ROPS/2&4wd	02975240	02990108	9.5-24	16.9-28	4,847
John Deere 5065M/5075M ROPS/2&4wd	02988414	02988413	9.5-24	16.9-30	4,847
John Deere 5065M/5075M Cab/2&4wd	02988414	02988412	9.5-24	16.9-30	4,847
John Deere 5083/5093/5101 E- Series Cab/4wd 2011-2013	02990238	02991122	12.4-24	18.4-30	5,288
John Deere 5085/5100/5115- M Series Cab 2/4wd 2012- 2013	02991985	02991972	11.2-24	16.9-30	5,288
John Deere 5105/5205 ROPS/2&4wd	02983241	02983239	9.5-24	14.9-28	4,847
John Deere 5220/5320 ROPS/2wd (Straddle Platform)	02975240	02979841	7.50-16	16.9-30	4,847
John Deere 5220/5320 Cab/2wd	02977928	02982282	7.50-16	16.9-30	4,847
John Deere 5225/5325 ROPS/2&4wd	02983098	02983099	9.5-24	16.9-30	4,847
John Deere 5225/5325 Cab/2&4wd	02983098	02983101	9.5-24	16.9-30	4,847
John Deere 5425/5525 ROPS/2&4wd (IOOS Platform)	02982523	02982524	11.2-24	16.9-30	4,847
John Deere 5425/5525/5603/5625 Cab/2&4wd	02982523	02983229	11.2-24	16.9-30	4,847
John Deere 5425/5525/5603/5625 Cab/2&4wd w/JD Loader	02983935	02983936	11.2-24	16.9-30	4,847
Kubota					
Kubota L5740 Cab/4wd (Mid-Mount PTO Req'd)	02987344	02990138	9.5-16	14.9-26	4,847
Kubota M5040/M6040/M7040 ROPS/2&4wd	02986297	02986298	12.5/80-18	16.9-28	4,847
Kubota M5040/M6040/M7040 Cab/2&4wd	02984775	02984776	11.2-24	16.9-30	4,847
New Holland					
New Holland T4020/4030 ROPS/2&4wd	02987690	02987691	11.2-20	16.9-28	4,847
New Holland T4020/4030 Cab/2&4wd	02988096	02988098	11.2-20	16.9-28	4,847
New Holland T5040/5050/5060/5070 Cab/2&4wd	02986587	02986588	11.2-24	16.9-30	4,847
New Holland TL80A/90A/100A ROPS/2&4wd	02982821	02982819	11.2-24	16.9-30	4,847
New Holland TL80A/90A/100A Cab/2&4wd	02982774	02982768	11.2-24	16.9-30	4,847
New Holland TN60A/70A/75A ROPS/2&4wd	02977320	02977321	11.2-24	16.9-28	4,847
New Holland TN60DA/70DA/75DA Cab/2&4wd	02980118	02980119	11.2-24	16.9-30	4,847
New Holland TN85A/95A ROPS/2&4wd	02984694	02984695	11.2-24	16.9-30	4,847

OTHER SPECIFICATIONS

1) Tractors should not be ordered with mid-mount loader valves as they may interfere with the subframe structure.
2) New Holland T4000, T5000 and TL-A models require a smaller replacement battery. We recommend Exide #34R-84N (Alamo #02982767).
3) The John Deere 5105/5205 will require a modification to the front bolster for proper driveline clearance.

Alamo Industrial

(800) 882-5762

SUPER HEAVY DUTY

74" Flail Mower

F.O.B. Seguin, TX

STANDARD SPECIFICATIONS

- 74" Cutting Width
- 10-Gauge Unitized Cutter Housing
- 5/16" Side Plates
- 4-1/2" x 5/16" Wall Cuttershaft
- 1-15/16" Bore Greaseable, Self Aligning Cuttershaft Bearings
- Belt Drive from Gearbox to Cuttershaft with Automatic Spring Tension
- 6" Adjustable Rear Roller
- Cutting Capacity: 1" Diameter Grass Material
- Factory Set-Up
- 60 HP Gearbox
- CAT 4 Driveline
- Torque Limiter Clutch
- Front & Rear Deflectors
- Available in Fine or Coarse-Cut
- 1/2" - 6" Cutting Height
- Tractor Req: Min 35 HP
- CAT I or CAT II Three-Point Hitch

PRODUCT ORDER CODE	DESCRIPTION	APPROX. WEIGHT		LIST PRICE
	74" SHD FLAIL BASE UNIT *(One Choice Required)*			
SHD74CTRFC	74" SHD, Center Mount (Fine Cut)	930		6,931
SHD74CTRCC	74" SHD, Center Mount (Course Cut- 3 oz. knives)	930		6,931
SHD74CTRES	74" SHD, Center Mount (Extreme Service- 4 oz. knives)	930		7,133
SHD74080FC	74" SHD, Offset 8" Right (Fine Cut)	930		6,931
SHD74080CC	74" SHD, Offset 8" Right (Course Cut- 3 oz. knives)	930		6,931
SHD74080ES	74" SHD, Offset 8" Right (Extreme Service- 4 oz. knives)	930		7,133
SHD74140FC	74" SHD, Offset 14" Right (Fine Cut)	930		6,931
SHD74140CC	74" SHD, Offset 14" Right (Course Cut- 3 oz. knives)	930		6,931
SHD74140ES	74" SHD, Offset 14" Right (Extreme Service- 4 oz. knives)	930		7,133
SHD74CTRFCCB	74" SHD, Center Mount, Caster Brackets (Fine Cut)	974		7,482
SHD74CTRCCCB	74" SHD, Center Mount, Caster Brackets (Course Cut- 3 oz. knives)	974		7,482
SHD74CTRESCB	74" SHD, Center Mount, Caster Brackets (Extreme Service- 4 oz. knives)	974		7,684
SHD74080FCCB	74" SHD, Offset 8" Right, Caster Brackets (Fine Cut)	974		7,482
SHD74080CCCB	74" SHD, Offset 8" Right, Caster Brackets (Course Cut- 3 oz. knives)	974		7,482
SHD74080ESCB	74" SHD, Offset 8" Right, Caster Brackets (Extreme Service- 4 oz. knives)	974		7,684
SHD74140FCCB	74" SHD, Offset 14" Right, Caster Brackets (Fine Cut)	974		7,482
SHD74140CCCB	74" SHD, Offset 14" Right, Caster Brackets (Course Cut- 3 oz. knives)	974		7,482
SHD74140ESCB	74" SHD, Offset 14" Right, Caster Brackets (Extreme Service- 4 oz. knives)	974		7,684
	CASTERS *(One Choice Required)*			
702193	360° Laminated Caster Wheel w/ Roller	154		1,144
702192	360° Pneumatic Caster Wheel w/ Roller	86		1,248
	OPTIONS			
701150	Lift Chain (1 Required for offset units; 2 Required for Centered Units)	7		99
02991506	Additional 12 Month Warranty			1,655
02991514	Special Mower Paint			451

Alamo Industrial

(800) 882-5762

SUPER HEAVY DUTY

88" Flail Mower

F.O.B. Seguin, TX

STANDARD SPECIFICATIONS

- 88" Cutting Width
- 10-Gauge Unitized Cutter Housing
- 5/16" Side Plates
- 4-1/2" x 5/16" Wall Cuttershaft
- 1-15/16" Bore Greaseable, Self Aligning Cuttershaft Bearings
- Belt Drive from Gearbox to Cuttershaft with Automatic Spring Tension
- 6" Adjustable Rear Roller
- Cutting Capacity: 1" Diameter Grass Material
- Factory Set-Up
- 60 HP Gearbox
- CAT 4 Driveline
- Torque Limiter Clutch
- Front & Rear Deflectors
- Available in Fine or Coarse-Cut
- 1/2" - 6" Cutting Height
- Tractor Req: Min 35 HP
- CAT I or CAT II Three-Point Hitch

PRODUCT ORDER CODE	DESCRIPTION	APPROX. WEIGHT		LIST PRICE
88" SHD FLAIL BASE UNIT *(One Choice Required, Continued Next Page)*				
SHD88CTRFC	88" SHD, Center Mount (Fine Cut)	1035		7,029
SHD88CTRCC	88" SHD, Center Mount (Course Cut- 3 oz. knives)	1035		7,029
SHD88CTRES	88" SHD, Center Mount (Extreme Service- 4 oz. knives)	1035		7,270
SHD88085FC	88" SHD, Offset 8.5" Right (Fine Cut)	1035		7,029
SHD88085CC	88" SHD, Offset 8.5" Right (Course Cut- 3 oz. knives)	1035		7,029
SHD88085ES	88" SHD, Offset 8.5" Right (Extreme Service- 4 oz. knives)	1035		7,270
SHD88145FC	88" SHD, Offset 14.5" Right (Fine Cut)	1035		7,029
SHD88145CC	88" SHD, Offset 14.5" Right (Course Cut- 3 oz. knives)	1035		7,029
SHD88145ES	88" SHD, Offset 14.5" Right (Extreme Service- 4 oz. knives)	1035		7,270
SHD88205FC	88" SHD, Offset 20.5" Right (Fine Cut)	1035		7,029
SHD88205CC	88" SHD, Offset 20.5" Right (Course Cut- 3 oz. knives)	1035		7,029
SHD88205ES	88" SHD, Offset 20.5" Right (Extreme Service- 4 oz. knives)	1035		7,270
SHD88265FC	88" SHD, Offset 26.5" Right (Fine Cut)	1035		7,029
SHD88265CC	88" SHD, Offset 26.5" Right (Course Cut- 3 oz. knives)	1035		7,029
SHD88265ES	88" SHD, Offset 26.5" Right (Extreme Service- 4 oz. knives)	1035		7,270
SHD88CTRFCCB	88" SHD, Center Mount, Caster Brackets (Fine Cut)	1069		7,825
SHD88CTRCCCB	88" SHD, Center Mount, Caster Brackets (Course Cut- 3 oz. knives)	1069		7,825
SHD88CTRESCB	88" SHD, Center Mount, Caster Brackets (Extreme Service- 4 oz. knives)	1069		8,066
SHD88085FCCB	88" SHD, Offset 8.5" Right, Caster Brackets (Fine Cut)	1069		7,825
SHD88085CCCB	88" SHD, Offset 8.5" Right, Caster Brackets (Course Cut- 3 oz. knives)	1069		7,825
SHD88085ESCB	88" SHD, Offset 8.5" Right, Caster Brackets (Extreme Service- 4 oz. knives)	1069		8,066
SHD88145FCCB	88" SHD, Offset 14.5" Right, Caster Brackets (Fine Cut)	1069		7,825
SHD88145CCCB	88" SHD, Offset 14.5" Right, Caster Brackets (Course Cut- 3 oz. knives)	1069		7,825
SHD88145ESCB	88" SHD, Offset 14.5" Right, Caster Brackets (Extreme Service- 4 oz. knives)	1069		8,066

PRICING CONTINUED ON NEXT PAGE

SUPER HEAVY DUTY

88" Flail Mower

F.O.B. Seguin, TX

PRODUCT ORDER CODE	DESCRIPTION	APPROX. WEIGHT		LIST PRICE
	88" SHD FLAIL BASE UNIT *(One Choice Required)*			
SHD88205FCCB	88" SHD, Offset 20.5" Right, Caster Brackets (Fine Cut)	1069		7,825
SHD88205CCCB	88" SHD, Offset 20.5" Right, Caster Brackets (Course Cut- 3 oz. knives)	1069		7,825
SHD88205ESCB	88" SHD, Offset 20.5" Right, Caster Brackets (Extreme Service- 4 oz. knives)	1069		8,066
SHD88265CCCB	88" SHD, Offset 26.5" Right, Caster Brackets (Course Cut- 3 oz. knives)	1069		7,825
SHD88265ESCB	88" SHD, Offset 26.5" Right, Caster Brackets (Extreme Service- 4 oz. knives)	1069		8,066
	CASTERS *(One Choice Required)*			
702193	360° Laminated Caster Wheel w/ Roller	154		1,144
702192	360° Pneumatic Caster Wheel w/ Roller	86		1,248
	OPTIONS			
701150	Lift Chain (1 Required for offset units; 2 Required for Centered Units)	7		99
803211	Additional Operators and Parts Manual			49
02991506	Additional 12 Month Warranty			1,655
02991515	Special Mower Paint			537

Alamo Industrial

(800) 882-5762

SUPER HEAVY DUTY

96" 3-Point Mount Flail Mower

F.O.B. Seguin, TX

STANDARD SPECIFICATIONS

- 96" Cutting Width
- 10-Gauge Unitized Cutter Housing
- 5/16" Side Plates
- 4-1/2" x 5/16" Wall Cuttershaft
- 1-15/16" Bore Greaseable, Self Aligning Cuttershaft Bearings
- Belt Drive from Gearbox to Cuttershaft with Automatic Spring Tension
- 6" Adjustable Rear Roller
- Cutting Capacity: 1" Diameter Grass Material
- Factory Set-Up
- Available in Fine or Coarse-Cut
- 60 HP Gearbox
- CAT 4 Driveline
- Torque Limiter Clutch
- Front & Rear Deflectors
- Available in Fine or Coarse-Cut
- 1/2" - 6" Cutting Height
- Tractor Req: Min 35 HP
- CAT I or CAT II Three-Point Hitch

PRODUCT ORDER CODE	DESCRIPTION	APPROX. WEIGHT		LIST PRICE
	96" SHD FLAIL BASE UNIT *(One Choice Required)*			
SHD96CTRFC	96" SHD, Center Mount (Fine Cut)	1170		7,828
SHD96CTRCC	96" SHD, Center Mount (Course Cut- 3 oz. knives)	1170		7,828
SHD96CTRES	96" SHD, Center Mount (Extreme Service- 4 oz. knives)	1170		8,092
SHD96125FC	96" SHD, Offset 12.5" Right (Fine Cut)	1170		7,828
SHD96125CC	96" SHD, Offset 12.5" Right (Course Cut- 3 oz. knives)	1170		7,828
SHD96125ES	96" SHD, Offset 12.5" Right (Extreme Service- 4 oz. knives)	1170		8,092
SHD96185FC	96" SHD, Offset 18.5" Right (Fine Cut)	1170		7,828
SHD96185CC	96" SHD, Offset 18.5" Right (Course Cut- 3 oz. knives)	1170		7,828
SHD96185ES	96" SHD, Offset 18.5" Right (Extreme Service- 4 oz. knives)	1170		8,092
SHD96245CC	96" SHD, Offset 24.5" Right (Course Cut- 3 oz. knives)	1170		7,828
SHD96245ES	96" SHD, Offset 24.5" Right (Extreme Service- 4 oz. knives)	1170		8,092
SHD96305CC	96" SHD, Offset 30.5" Right (Course Cut- 3 oz. knives)	1170		7,828
SHD96305ES	96" SHD, Offset 30.5" Right (Extreme Service- 4 oz. knives)	1170		8,092
SHD96CTRFCCB	96" SHD, Center Mount, Caster Brackets (Fine Cut)	1249		8,356
SHD96CTRCCCB	96" SHD, Center Mount, Caster Brackets (Course Cut- 3 oz. knives)	1249		8,356
SHD96CTRESCB	96" SHD, Center Mount, Caster Brackets (Extreme Service- 4 oz. knives)	1249		8,620
SHD96125CCCB	96" SHD, Offset 12.5" Right, Caster Brackets (Course Cut 3 oz. knives)	1249		8,356
SHD96125ESCB	96" SHD, Offset 18.5" Right, Caster Brackets (Extreme Service- 4 oz. knives)	1249		8,620
SHD96245CCCB	96" SHD, Offset 24.5" Right, Caster Brackets (Course Cut- 3 oz. knives)	1249		8,356
SHD96245ESCB	96" SHD, Offset 24.5" Right, Caster Brackets (Extreme Service- 4 oz. knives)	1249		8,620
SHD96305CCCB	96" SHD, Offset 30.5" Right, Caster Brackets (Course Cut- 3 oz. knives)	1249		8,356
SHD96305ESCB	96" SHD, Offset 30.5" Right, Caster Brackets (Extreme Service- 4 oz. knives)	1249		8,620
	CASTERS *(One Choice Required)*			
702193	360° Laminated Caster Wheel w/ Roller	154		1,144
702192	360° Pneumatic Caster Wheel w/ Roller	86		1,248
	OPTIONS			
701150	Lift Chain (1 Required for offset units; 2 Required for Centered Units)	7		99
803211	Additional Operators and Parts Manual			49
02991506	Additional 12 Month Warranty			1,655
02991516	Special Mower Paint			586

Alamo Industrial

(800) 882-5762

RX- HEAVY DUTY

60", 72", 84", 96" Lift -Type Rotary Mower

F.O.B. Gibson City, IL

STANDARD SPECIFICATIONS

- RX60 Models- 60" Cutting Width
  RX72 Models- 72" Cutting Width
  RX84 Models- 84" Cutting Width
  RX96 Models- 96" Cutting Width
- All models- 540 PTO Type
- RX60 Models- CAT I Three-Point Hitch
  RX72/RX84/RX96 Models- CAT II Three-Point Hitch
- RX60/RX72 Models- 110 HP Gearbox
  RX 84 Models- 120 HP Gearbox
  RX96 Models- 120 HP Center Power Divider - 110 HP Gearboxes
- CAT 4 Shielded Drivelines
- Slip Clutch Protection
- Pan Blade Carrier w/ Updraft Blades
- 360° Swivel Tailwheel
- Rated For 2" Brush
- Front & Rear Double Chainguards
- 10-Gauge Rolled Top Deck
- 1/4" x 9" Side Skirts
- Continuous Weld Deck to Skirt Seam

PRODUCT ORDER CODE	DESCRIPTION	APPROX. WEIGHT		LIST PRICE
	NOTE: SOME ASSEMBLY IS REQUIRED ON ALL RX UNITS			
	RX60 BASE UNIT			
RX020160	RX60 Lift- Type 540 PTO Model (Round Pan, Single Tail Wheel, w/Double Chain Guards)	1069		4,556
RX020172	RX72 Lift- Type 540 PTO Model (Round Pan, Single Tail Wheel, w/Double Chain Guards)	1252		5,016
RX000184	RX84 Lift- Type 540 PTO Model (Round Pan, Single Tail Wheel, w/Double Chain Guards)	1,381		5,478
RX000284	RX84 Lift-Type 540 PTO Model (Round Pan, Dual Tail Wheel, w/Double Chain Guards)	1,479		5,895
04200096	RX96 Lift-Type 540 PTO (Round Pan, Dual Tail Wheel, w/Double Chain Guards)	2024		8,508
	OPTIONS			
3570	Check Chain Kit (Contains a Set of 2 Chains) (CAT I)	8		204
3571M	Check Chain Kit (Contains a Set of 2 Chains) (CAT II)	15		438
00763420	Offset Adapter Kit (15 3/4 in Offset)- RX84 & RX96 Units only	240		2,836
8B208	Additional Operators Manual- RX 60/72/84 Series			51
8B184	Additional Operators Manual- RX 96 Models			51
02991507	Additional 12 Month Warranty- RX Series			1,552
02991517	Special Mower Paint on RX60 Units			407
02991518	Special Mower Painton RX72 Units			488
02991519	Special Mower Paint on RX84 Units			556
02991520	Special Mower Paint on RX96 Units			652

Alamo Industrial

(800) 882-5762

RX- HEAVY DUTY

84", 96" Pull-Type Rotary Mowers

F.O.B. Gibson City, IL

STANDARD SPECIFICATIONS

- RX84- 84" Cutting Width
  RX96- 96" Cutting Width
- Designed for 540 RPM PTO applications
- 10-Gauge Top Deck
- Pan Blade Carriers w/ Updraft Type Blades
- 4" Blade Overlap
- Replaceable Skid Shoes
- Front & Rear Double Chainguards
- RX84- 120 HP Gearbox
  RX96- 120 HP Center Power Divider - 110HP Outer Gearboxes
- Parking Jack
- Safety Tow Chain
- Pull-Type Design
- 1/4" x 9" Side Skirts
- CAT 4 Shielded Driveline
- Slip Clutch Protection

PRODUCT ORDER CODE	DESCRIPTION	APPROX. WEIGHT		LIST PRICE
NOTE: SOME ASSEMBLY IS REQUIRED ON ALL RX UNITS				
RX96 PULL-TYPE BASE UNIT *(Less Wheels)*				
RX011184	RX84 Pull-Type 540 PTO (Round Pan, Hyd Cyl & Hose Kit, Dual Tail Wheel, w/Double Chain Guards)	1238		7,694
04300096	RX96 Pull-Type 540 PTO (Round Pan, Hyd Cyl & Hose Kit, Dual Tail Wheel, w/Double Chain Guards)	2439		9,728
WHEEL & TIRE OPTIONS *(One Choice Required)*				
00770519	Two Laminated Tires & Wheels	150		435
00770544	Two Used Airplane Tires & Wheels	156		516
00770524	Two 15" Wheels (Wheels Only)	36		117
00770529	Two Implement Tires & Wheels	80		461
OPTIONS				
00778158	Spring Shock Absorber- RX84 & RX96 Units only	25		741
00755234	Stroke Control- RX84 & RX96 Units only	1		41
8B184	Additional Operators Manual- RX 96 Models			51
02991507	Additional 12 Month Warranty- RX Series			1,552
02991519	Special Mower Paint on RX84 Units			556
02991520	Special Mower Paint on RX96 Units			652

Alamo Industrial

(800) 882-5762

RX- SUPER HEAVY DUTY

72" Lift-Type Rotary Mower

F.O.B. Gibson City, IL

STANDARD SPECIFICATIONS

- 72" Cutting Width
- 540 PTO
- CAT I or II Three-Point Hitch
- Pan Blade Carrier
- Slip Clutch Protection
- 7-gauge top deck
- Continuous Weld Deck to Skirt Seam
- Front & Rear Double Chainguards
- Tractor PTO HP Required - 40
- 130 HP Gearbox
- CAT 5 Shielded Drivelines
- 360° Swivel Tailwheel
- Rated For 4" Brush

PRODUCT ORDER CODE	DESCRIPTION	APPROX. WEIGHT		LIST PRICE
NOTE: SOME ASSEMBLY IS REQUIRED ON ALL RX UNITS				
RX72HD BASE UNIT				
RXHD1072	RX72HD Lift- Type 540 PTO Model (Round Pan, Single Tail Wheel, w/Double Chain Guards)	1275		6,349
OPTIONS				
3570	Check Chain Kit (Contains a Set of 2 Chains) (CAT I)	8		204
8B209	Additional Operators Manual- RX72HD Models			51
02991507	Additional 12 Month Warranty- RX Series			1,552
02991518	Special Mower Painton RX72 Units			488

Alamo Industrial

(800) 882-5762

EAGLE MECHANICAL

10', 15' Flex-Wing Rotary Mower

F.O.B. Gibson City, IL

Standard Specifications

- All Models: 540 PTO Only
- Cutting Width: Eagle 10' Models: 126" Eagle 15' Models: 180"
- Overall Width: Eagle 10' Models: 133" Eagle 15' Models: 186"
- Overall Length: Eagle 10' Models: 183" Eagle 15' Models: 183"
- Transport Width: Eagle 10' Models: 88" Eagle 15' Models: 96"
- Cutting Height Range: 1-1/2" Min. to 14-1/2" Max
- Self-Leveling Height Adjustment: Hydraulic Cylinder
- Blade Carrier: Reinforced Pan w/ Updraft Style Blades
- Standard Blades: 1/2" Thick x 4" Wide
- Gearbox Rating: * (Ratings based on actual field performance)
  Power Divider - 235 HP Center & Wing - 205 HP
- Wing Flex Degrees: 90 up, 22 down
- Blade Overlap: 6"
- Jack Stand: Standard
- Required Horsepower: 50
- Weight: Eagle 10' Models: Approximately 3,850 lbs.
  Eagle 15' Models: Approximately 5,435 lbs.
- Safety Tow Chain: Standard
- Output Shaft Diameter: 2-3/8"
- Blade Tip Speed: Center 16,286 FPM
  Wing 16,415 FPM
- Cutting Capacity: 3-1/2" Grass Material
- Driveline Size: Main - Cat 5
  Constant Velocity
  Wing - Cat 5
- Driveline Protection: Slip Clutch
- Deck Thickness: 7 gauge
- Side Skirt: 1/4" x 10-1/2"
- Tires & Wheel: Foam-filled used airplane
- Wing Lift Hydraulics: Standard
- Double Chainguards
- Mower Warranty: One year limited
- Gearbox Warranty: 5 year limited
- Hitch: Drawbar- Pull-Type Unit

PRODUCT ORDER CODE	DESCRIPTION	APPROX. WEIGHT		LIST PRICE
04052115	Eagle 15' Flex-Wing 540 PTO Model (Deck Rings, w/ 6 Foam Filled Airplane Tires)	5435		24,460
04052110	Eagle 10' Flex-Wing 540 PTO Model (Deck Rings, w/ 5 Foam Filled Airplane Tires)	3850		21,191
NOTE: TRACTOR MUST BE EQUIPPED WITH 2 REAR REMOTES FOR PROPER OPERATION				
OPTIONS				
00780570	Winch & Stand	34		795
00769178	Ball Hitch (2-5/16" Ball)	50		504
00773869	Pintle Hitch Kit (Requires Tractor Drawbar Modification)	50		1038
00774802	Single Auxillary Spindle Kit (Requires 1 Additional Tire and Wheel)	24		217
00774803	Dual Auxillary Spindle Kit (Requires 2 Additional Tires and Wheels)	24		433
00779383	Set of Heavy Duty Updraft Blades (5/8" Thick x 4" Wide)- 15' Eagle Model	100		491
00779389	Set of Heavy Duty Updraft Blades (5/8" Thick x 4" Wide)- 10' Eagle Model	100		349
00780567C	Additional Operators Manual- Eagle Series			51
00780567P	Additional Parts Manual- Eagle Series			51
02991508	Additional 12 Month Warranty- Eagle Series			2409
02991522	Special Mower Paint- Eagle 15 Models (Call before quoting)			1094
02991521	Special Mower Paint- Eagle 10 Models (Call before quoting)			803
WHEEL & TIRE OPTIONS (SELECT FROM ONE GROUP OF TIRES) (5 OR 6 REQUIRED)				
00008700	15" Wheel- Rim only (5 Hole Pattern)	18 each		65
00025200	Laminated Tire & Wheel	75 each		209
00749698	Implement Tire & Wheel	40 each		248
00771461	Used Airplane Tire & Wheel (Not Foam Filled)	78 each		273
00787512	Foam-Filled Used Airplane Tire & Wheel (21 x 7- 12 ply) - Standard in base pricing	75 each		289
SHIPPING CONFIGURATION				
00888802	Fully Assembled			N/C
00888703	Unassembled, Shipped in Bundles			N/C

Alamo Industrial

(800) 882-5762

EXTEN-A-KUT II

Rear-Mount Offset Rotary Mower

F.O.B. Seguin, TX

STANDARD SPECIFICATIONS

- 60" Cutting Width
- CAT II Three-Point Hitch
- 60-Gallon Hydraulic Reservoir
- 12'6" Maximum Reach from Right Side of Tractor
- 180° Head Tilt
- 79 HP Hydraulic Pump Attached to a Speed Increaser
- 10-Gauge Deck with Boxed Channel Frame
- 81 HP Hydraulic Motor Directly Splined to Spindle
- 2" Spindle in a Unibody Cast Housing
- Bar Blade Carrier
- 1/2" x 4" Updraft Blades
- Front & Rear Double Chainguards

PRODUCT ORDER CODE	DESCRIPTION	APPROX. WEIGHT		LIST PRICE
	EXTEN-A-KUT II BASE UNIT *(One Choice Required)*			
04700014	Exten-A-Kut II, 540 PTO, Bar Blade Carrier	1620		15,065
04700011	Exten-A-Kut II, 540 PTO, Pan Blade Carrier	1650		15,268
	FRONT GUARD *(One Choice Required)*			
00775779	Double Chain Guard	58		In Base Price
	REAR GUARD *(One Choice Required)*			
00775779	Double Chain Guard	58		In Base Price
	OPTIONS			
02969111	Additional Operators and Parts Manual			52
00777523	Tail Wheel Kit (Ser.#011804 & Up)	72		785
02964902	Cable & Clamp Kit	12		22
02991509	Additional 12 Month Warranty			1,552
02991523	Special Mower Paint			369

Alamo Industrial

(800) 882-5762

GRASS KING

62" & 74" Offset Flail Mowers

F.O.B. Seguin, TX

STANDARD SPECIFICATIONS

- 6"x8"x3/16" Welded Rectangular Tube Frame
- 360 degree Rotating Rear Caster Wheel
- CAT I or CAT II Three-Point Hitch
- 50 to 90 Horsepower Tractor Required
- Hydraulic Piston Pump Rated @ 4000 PSI
- CAT 4 Driveline
- 1 to 4 Speed Increaser
- 14 Gallon Hydraulic Reservoir
- 12 Micron Filtration System
- 10 Gauge Unitized Cutter Housing
- 62" or 74" Cutting Widths
- 1/2" Inboard & 5/16" Outboard End Plates
- Replaceable Skid Shoes
- 4-1/2" x 5/16" Bore, Greasable, Self-Aligning Cuttershaft Bearings
- Belt Drive from Motor to Cuttershaft with Automatic Spring Tension
- 74 HP Motor
- 6" Adjustable Rear Roller
- Front & Rear Deflectors
- Available in Fine or Coarse-Cut
- 1/2" - 6" Cutting Height
- Cutting Capacity: 1" diameter material
- Tractor Req: Min 50-90 HP range

PRODUCT ORDER CODE	DESCRIPTION	APPROX. WEIGHT		LIST PRICE
GRASS KING FLAIL BASE UNIT *(One Choice Required)*				
04006200	Grass King 62" Flail Mower	2038		18,166
04006202	Grass King 62" Flail Mower w/ Extreme Service- 4 oz.Knives	2032		18,722
04007400	Grass King 74" Flail Mower	2080		18,825
04007410	Grass King 74" Flail Mower w/ Extreme Service- 4 oz.Knives	2074		19,046
LIFT PIN OPTIONS *(One Choice Required)*				
02965040	Lift Pin CAT I	8		N/C
02965050	Lift Pin CAT II	8		N/C
OPTIONS				
02965180	Additional Operators and Parts Manual			51
3570GK	Check Chains (CAT I)	8		204
3571MGK	Check Chains (CAT II)	15		438
00772391	Parking Jack (3,000 lb / Side Wind)	11		86
02991510	Additional 12 Month Warranty			776
02991524	Special Mower Paint			369

Alamo Industrial

(800) 882-5762

MCCONNEL PA REAR-MOUNT BOOM

Articulated Rear-Mount Models

F.O.B. Seguin, TX

STANDARD SPECIFICATIONS

- **All Models Feature Welded Tubular Frame Design**
- **PA4330- CAT I or CAT II Three-Point Hitch**
- **PA4745/48- CAT II Three-Point Hitch**
- **All Models Feature Self-Contained Hydraulics**
- **Machine Weight With Flail & Oil:** PA4330- 1,409 lbs/PA4745: 2,151 lbs/ PA48: 2,750 lbs
- **Boom Reach:**
  - PA4330- Up-16'8", Out-13'8"
  - PA4745- Up-16'0", Out-14'0"
  - PA48- Up-16'5", Out-15'0"
- **Minimum Tractor Requirements*:**
  - PA4330- Tractor Weight of 4,010 lbs & 45 PTO hp
  - PA4745- Tractor Weight of 5,512 lbs & 50 PTO hp
  - PA48- Tractor Weight of 6,614 lbs & 60 PTO hp
- **Reservoir Capacity:**
  - PA4330- 17 Gallon
  - PA4745- 39 Gallon
  - PA48- 47 Gallon
- **Output Horsepower:**
  - PA4330- 25 hp (1" Cutting Capacity)
  - PA4745- 45 hp (2" Cutting Capacity)
  - PA48- 54 hp (2" Cutting Capacity)

*** This product line is not recommended for Kubota tractors.**

PRODUCT ORDER CODE	DESCRIPTION	APPROX. WEIGHT		LIST PRICE
	PA 4330- POWER ARM BOOMS			
	Tractors with CAT I or CAT II, three-point hitch, 540 PTO shaft, 45 PTO hp minimum* **Note: Front counterweight may be required**			
	BASE UNIT			
04090265	PA 4330 Rear-Mount RH Boom Assembly (Cable-operated/ w Lift float)	1360		16,078
	MOWER HEADS			
02991665	PA 4330 39" Flail Head Assy.- 1.0m Supercut w/ Universal Knives	418		7,204
02991833	PA 4330 47" Flail Head Assy.- 1.2m Supercut w/ "Duck" Knives	665		8,940
	PA4745/48- POWER ARM BOOMS			
	Tractors with CAT II, three-point hitch, 540 PTO shaft, 60 Eng HP minimum* **Note: Front counterweight may be required.**			
	BASE UNIT			
04090260	PA4745 Rear-Mount RH Boom (Cable-operated/ w Lift float)	1951		17,818
04090262	PA48M Rear-Mount RH Boom Mower (Mid-Cut) (Cable-operated/ w Lift float)	1985		20,661
	MOWER HEADS			
02987798	PA 4745 47" Flail Head Assy.- 1.2m Supercut Flail w/ F91 "Competition" Knives	660		8,045
02987799	PA48 47" Flail Head Assy.- 1.2m Multicut w/Competition Knives	665		8,609
02988618	PA 4745/48 48" Rotary Head Assy. w/Flaps	600		7,799
	SAFETY SCREENS *(One Choice Required)*			
02964407	Universal Safety Screen Kit- Cab Tractors			N/C
00765754	Universal Safety Screen Kit- Rops Tractors			N/C
	OPTIONS			
22674.82	PA 4330 Additional Operators Manual			51
22674.51	PA 4745 Additional Operators Manual			51
41570.69	PA 48 Additional Operators Manual			51
02991512	Additional 12 Month Warranty			1,164

Alamo Industrial

(800) 882-5762

ALAMO® INDUSTRIAL

BUILT SHARPER®

1502 East Walnut St.
Seguin, TX 78155

Sales & Marketing
800-882-5762 830-379-0864 fax
support@alamo-industrial.com

Warranty Registration/Claims
www.alamoparts.com

Return Authorizations
Online Part Orders
Technical Information
www.alamoparts.com
800-356-6286 800-322-5041 fax

www.alamo-industrial.com

MEMBER OF THE ALAMO GROUP
ALWAYS ON THE CUTTING EDGE®

ALAMO® INDUSTRIAL

BUILT SHARPER®

WHOLEGOODS PRICING

NJPA

National Joint Powers Alliance

RFP #070313

Universal Line

Effective February 15, 2013

Universal Line Price Book

Table of Contents

Switchblade	This Series Designated for Grounds Maintenance Contract (RFP# 070313)
Switchblade- Mount Kits	This Series Designated for Grounds Maintenance Contract (RFP# 070313)
74" Super Heavy Duty (SHD)- Flail Mowers	This Series Designated for Grounds Maintenance Contract (RFP# 070313)
88" Super Heavy Duty (SHD)- Flail Mowers	This Series Designated for Grounds Maintenance Contract (RFP# 070313)
96" Super Heavy Duty (SHD)- Flail Mowers	This Series Designated for Grounds Maintenance Contract (RFP# 070313)
RX- Standard Duty Lift -Type Rotary Mowers	This Series Designated for Grounds Maintenance Contract (RFP# 070313)
RX- Standard Duty Pull -Type Rotary Mowers	This Series Designated for Grounds Maintenance Contract (RFP# 070313)
RX- Heavy Duty Series Lift -Type Rotary Mowers	This Series Designated for Grounds Maintenance Contract (RFP# 070313)
Eagle Mechanical Flex Wing Mowers	This Series Designated for Grounds Maintenance Contract (RFP# 070313)
Exten-A-Kut II Rotary Mowers	This Series Designated for Grounds Maintenance Contract (RFP# 070313)
Grass King Flail Mowers	This Series Designated for Grounds Maintenance Contract (RFP# 070313)
McConnel Power Arm (PA)	This Series Designated for Grounds Maintenance Contract (RFP# 070313)

SWITCHBLADE

5', 6' Sickle Bar Mower

F.O.B. Seguin, TX

STANDARD SPECIFICATIONS

- Full Hydraulic Drive of Cutter Knife
- Hydraulically Actuated Breakaway
- Hydraulic Lift and Tilt
- Knife Speed Governor
- 3" Heavy Duty Industrial Rock Guards
- Reversible Hydraulic Motor
- Safety Transport Locks
- Self-Contained Hydraulics
- Cutting Capacity: 1/2" diameter material
- Tractor Req: Min. 3,000 lbs. and a 25 HP rating

PRODUCT ORDER CODE	DESCRIPTION	APPROX. WEIGHT		LIST PRICE
SWITCHBLADE BASE UNIT *(One Choice Required)*				
04116007	5' Switchblade Single RH w/ Serrated Knives	709		12,171
04117207	6' Switchblade Single RH w/ Serrated Knives	723		12,422
MOUNT KIT *(One Choice Required)* *See Mount Kit Page for Descriptions and Part Numbers*				
OPTIONS				
02974374	Additional Operators and Parts Manuals (Hard Copy)			51
02986457	Additional Operators, Parts & Service Manuals (CD Format)			51
0487100	Knife Holder Brackets (Order Quantity 2 per Unit)	9		125
02986583	Case-IH Farmall U & NH T5000 Series Pump Guard Kit			296
02977682	Case-IH JX-C & NH TN-A / T4000 Series Pump Guard Kit			296
02982781	Case-IH JX-U & NH TL-A Series Pump Guard Kit			296
02983392	John Deere 5105/5205 Pump Guard Kit			296
02985461	John Deere 5220/5320 & 5E Series Pump Guard Kit			296
02983480	John Deere 5025 / 5E Limited & 5M Series Pump Guard Kit			296
02988134	Kubota M5040/M6040/M7040 Pump Guard Kit			296
0800000	Factory Mount			1,801
02991513	Special Mower Paint			349
02991505	Additional 12 Month Warranty			1,880

Alamo Industrial

(800) 882-5762

SWITCHBLADE

5', 6' MOUNT KIT OPTIONS

F.O.B. Seguin, TX

TRACTOR DESCRIPTION	SUBFRAME KIT	HYDRAULIC KIT	MAX. TIRE SIZE FRONT	MAX. TIRE SIZE REAR	LIST PRICE
Case-IH					
Case-IH Farmall 85U/95U/105U Cab/2&4wd	02986587	02986588	11.2-24	16.9-30	4,847
Case-IH JX1060C/1070C/1075C Cab/2&4wd	02980118	02980119	11.2-24	16.9-30	4,847
Case-IH JX1080U/1090U/1100U ROPS/2&4wd	02982821	02982819	11.2-24	16.9-30	4,847
Case-IH JX1080U/1090U/1100U Cab/2&4wd	02982774	02982768	11.2-24	16.9-30	4,847
John Deere					
John Deere 5045E/5055E/5065E/5075E ROPS/2&4wd	02975240	02990108	9.5-24	16.9-28	4,847
John Deere 5065M/5075M ROPS/2&4wd	02988414	02988413	9.5-24	16.9-30	4,847
John Deere 5065M/5075M Cab/2&4wd	02988414	02988412	9.5-24	16.9-30	4,847
John Deere 5083/5093/5101 E- Series Cab/4wd 2011-2013	02990238	02991122	12.4-24	18.4-30	5,288
John Deere 5085/5100/5115- M Series Cab 2/4wd 2012- 2013	02991985	02991972	11.2-24	16.9-30	5,288
John Deere 5105/5205 ROPS/2&4wd	02983241	02983239	9.5-24	14.9-28	4,847
John Deere 5220/5320 ROPS/2wd (Straddle Platform)	02975240	02979841	7.50-16	16.9-30	4,847
John Deere 5220/5320 Cab/2wd	02977928	02982282	7.50-16	16.9-30	4,847
John Deere 5225/5325 ROPS/2&4wd	02983098	02983099	9.5-24	16.9-30	4,847
John Deere 5225/5325 Cab/2&4wd	02983098	02983101	9.5-24	16.9-30	4,847
John Deere 5425/5525 ROPS/2&4wd (IOOS Platform)	02982523	02982524	11.2-24	16.9-30	4,847
John Deere 5425/5525/5603/5625 Cab/2&4wd	02982523	02983229	11.2-24	16.9-30	4,847
John Deere 5425/5525/5603/5625 Cab/2&4wd w/JD Loader	02983935	02983936	11.2-24	16.9-30	4,847
Kubota					
Kubota L5740 Cab/4wd (Mid-Mount PTO Req'd)	02987344	02990138	9.5-16	14.9-26	4,847
Kubota M5040/M6040/M7040 ROPS/2&4wd	02986297	02986298	12.5/80-18	16.9-28	4,847
Kubota M5040/M6040/M7040 Cab/2&4wd	02984775	02984776	11.2-24	16.9-30	4,847
New Holland					
New Holland T4020/4030 ROPS/2&4wd	02987690	02987691	11.2-20	16.9-28	4,847
New Holland T4020/4030 Cab/2&4wd	02988096	02988098	11.2-20	16.9-28	4,847
New Holland T5040/5050/5060/5070 Cab/2&4wd	02986587	02986588	11.2-24	16.9-30	4,847
New Holland TL80A/90A/100A ROPS/2&4wd	02982821	02982819	11.2-24	16.9-30	4,847
New Holland TL80A/90A/100A Cab/2&4wd	02982774	02982768	11.2-24	16.9-30	4,847
New Holland TN60A/70A/75A ROPS/2&4wd	02977320	02977321	11.2-24	16.9-28	4,847
New Holland TN60DA/70DA/75DA Cab/2&4wd	02980118	02980119	11.2-24	16.9-30	4,847
New Holland TN85A/95A ROPS/2&4wd	02984694	02984695	11.2-24	16.9-30	4,847

OTHER SPECIFICATIONS

1) Tractors should not be ordered with mid-mount loader valves as they may interfere with the subframe structure.
2) New Holland T4000, T5000 and TL-A models require a smaller replacement battery. We recommend Exide #34R-84N (Alamo #02982767).
3) The John Deere 5105/5205 will require a modification to the front bolster for proper driveline clearance.

Alamo Industrial

(800) 882-5762

SUPER HEAVY DUTY

74" Flail Mower

F.O.B. Seguin, TX

STANDARD SPECIFICATIONS

- 74" Cutting Width
- 10-Gauge Unitized Cutter Housing
- 5/16" Side Plates
- 4-1/2" x 5/16" Wall Cuttershaft
- 1-15/16" Bore Greaseable, Self Aligning Cuttershaft Bearings
- Belt Drive from Gearbox to Cuttershaft with Automatic Spring Tension
- 6" Adjustable Rear Roller
- Cutting Capacity: 1" Diameter Grass Material
- Factory Set-Up
- 60 HP Gearbox
- CAT 4 Driveline
- Torque Limiter Clutch
- Front & Rear Deflectors
- Available in Fine or Coarse-Cut
- 1/2" - 6" Cutting Height
- Tractor Req: Min 35 HP
- CAT I or CAT II Three-Point Hitch

PRODUCT ORDER CODE	DESCRIPTION	APPROX. WEIGHT		LIST PRICE
	74" SHD FLAIL BASE UNIT *(One Choice Required)*			
SHD74CTRFC	74" SHD, Center Mount (Fine Cut)	930		6,931
SHD74CTRCC	74" SHD, Center Mount (Course Cut- 3 oz. knives)	930		6,931
SHD74CTRES	74" SHD, Center Mount (Extreme Service- 4 oz. knives)	930		7,133
SHD74080FC	74" SHD, Offset 8" Right (Fine Cut)	930		6,931
SHD74080CC	74" SHD, Offset 8" Right (Course Cut- 3 oz. knives)	930		6,931
SHD74080ES	74" SHD, Offset 8" Right (Extreme Service- 4 oz. knives)	930		7,133
SHD74140FC	74" SHD, Offset 14" Right (Fine Cut)	930		6,931
SHD74140CC	74" SHD, Offset 14" Right (Course Cut- 3 oz. knives)	930		6,931
SHD74140ES	74" SHD, Offset 14" Right (Extreme Service- 4 oz. knives)	930		7,133
SHD74CTRFCCB	74" SHD, Center Mount, Caster Brackets (Fine Cut)	974		7,482
SHD74CTRCCCB	74" SHD, Center Mount, Caster Brackets (Course Cut- 3 oz. knives)	974		7,482
SHD74CTRESCB	74" SHD, Center Mount, Caster Brackets (Extreme Service- 4 oz. knives)	974		7,684
SHD74080FCCB	74" SHD, Offset 8" Right, Caster Brackets (Fine Cut)	974		7,482
SHD74080CCCB	74" SHD, Offset 8" Right, Caster Brackets (Course Cut- 3 oz. knives)	974		7,482
SHD74080ESCB	74" SHD, Offset 8" Right, Caster Brackets (Extreme Service- 4 oz. knives)	974		7,684
SHD74140FCCB	74" SHD, Offset 14" Right, Caster Brackets (Fine Cut)	974		7,482
SHD74140CCCB	74" SHD, Offset 14" Right, Caster Brackets (Course Cut- 3 oz. knives)	974		7,482
SHD74140ESCB	74" SHD, Offset 14" Right, Caster Brackets (Extreme Service- 4 oz. knives)	974		7,684
	CASTERS *(One Choice Required)*			
702193	360° Laminated Caster Wheel w/ Roller	154		1,144
702192	360° Pneumatic Caster Wheel w/ Roller	86		1,248
	OPTIONS			
701150	Lift Chain (1 Required for offset units; 2 Required for Centered Units)	7		99
02991506	Additional 12 Month Warranty			1,655
02991514	Special Mower Paint			451

Alamo Industrial

(800) 882-5762

SUPER HEAVY DUTY

88" Flail Mower

F.O.B. Seguin, TX

STANDARD SPECIFICATIONS

- 88" Cutting Width
- 10-Gauge Unitized Cutter Housing
- 5/16" Side Plates
- 4-1/2" x 5/16" Wall Cuttershaft
- 1-15/16" Bore Greaseable, Self Aligning Cuttershaft Bearings
- Belt Drive from Gearbox to Cuttershaft with Automatic Spring Tension
- 6" Adjustable Rear Roller
- Cutting Capacity: 1" Diameter Grass Material
- Factory Set-Up
- 60 HP Gearbox
- CAT 4 Driveline
- Torque Limiter Clutch
- Front & Rear Deflectors
- Available in Fine or Coarse-Cut
- 1/2" - 6" Cutting Height
- Tractor Req: Min 35 HP
- CAT I or CAT II Three-Point Hitch

PRODUCT ORDER CODE	DESCRIPTION	APPROX. WEIGHT		LIST PRICE
88" SHD FLAIL BASE UNIT *(One Choice Required, Continued Next Page)*				
SHD88CTRFC	88" SHD, Center Mount (Fine Cut)	1035		7,029
SHD88CTRCC	88" SHD, Center Mount (Course Cut- 3 oz. knives)	1035		7,029
SHD88CTRES	88" SHD, Center Mount (Extreme Service- 4 oz. knives)	1035		7,270
SHD88085FC	88" SHD, Offset 8.5" Right (Fine Cut)	1035		7,029
SHD88085CC	88" SHD, Offset 8.5" Right (Course Cut- 3 oz. knives)	1035		7,029
SHD88085ES	88" SHD, Offset 8.5" Right (Extreme Service- 4 oz. knives)	1035		7,270
SHD88145FC	88" SHD, Offset 14.5" Right (Fine Cut)	1035		7,029
SHD88145CC	88" SHD, Offset 14.5" Right (Course Cut- 3 oz. knives)	1035		7,029
SHD88145ES	88" SHD, Offset 14.5" Right (Extreme Service- 4 oz. knives)	1035		7,270
SHD88205FC	88" SHD, Offset 20.5" Right (Fine Cut)	1035		7,029
SHD88205CC	88" SHD, Offset 20.5" Right (Course Cut- 3 oz. knives)	1035		7,029
SHD88205ES	88" SHD, Offset 20.5" Right (Extreme Service- 4 oz. knives)	1035		7,270
SHD88265FC	88" SHD, Offset 26.5" Right (Fine Cut)	1035		7,029
SHD88265CC	88" SHD, Offset 26.5" Right (Course Cut- 3 oz. knives)	1035		7,029
SHD88265ES	88" SHD, Offset 26.5" Right (Extreme Service- 4 oz. knives)	1035		7,270
SHD88CTRFCCB	88" SHD, Center Mount, Caster Brackets (Fine Cut)	1069		7,825
SHD88CTRCCCB	88" SHD, Center Mount, Caster Brackets (Course Cut- 3 oz. knives)	1069		7,825
SHD88CTRESCB	88" SHD, Center Mount, Caster Brackets (Extreme Service- 4 oz. knives)	1069		8,066
SHD88085FCCB	88" SHD, Offset 8.5" Right, Caster Brackets (Fine Cut)	1069		7,825
SHD88085CCCB	88" SHD, Offset 8.5" Right, Caster Brackets (Course Cut- 3 oz. knives)	1069		7,825
SHD88085ESCB	88" SHD, Offset 8.5" Right, Caster Brackets (Extreme Service- 4 oz. knives)	1069		8,066
SHD88145FCCB	88" SHD, Offset 14.5" Right, Caster Brackets (Fine Cut)	1069		7,825
SHD88145CCCB	88" SHD, Offset 14.5" Right, Caster Brackets (Course Cut- 3 oz. knives)	1069		7,825
SHD88145ESCB	88" SHD, Offset 14.5" Right, Caster Brackets (Extreme Service- 4 oz. knives)	1069		8,066

PRICING CONTINUED ON NEXT PAGE

SUPER HEAVY DUTY

88" Flail Mower

F.O.B. Seguin, TX

PRODUCT ORDER CODE	DESCRIPTION	APPROX. WEIGHT		LIST PRICE
	88" SHD FLAIL BASE UNIT *(One Choice Required)*			
SHD88205FCCB	88" SHD, Offset 20.5" Right, Caster Brackets (Fine Cut)	1069		7,825
SHD88205CCCB	88" SHD, Offset 20.5" Right, Caster Brackets (Course Cut- 3 oz. knives)	1069		7,825
SHD88205ESCB	88" SHD, Offset 20.5" Right, Caster Brackets (Extreme Service- 4 oz. knives)	1069		8,066
SHD88265CCCB	88" SHD, Offset 26.5" Right, Caster Brackets (Course Cut- 3 oz. knives)	1069		7,825
SHD88265ESCB	88" SHD, Offset 26.5" Right, Caster Brackets (Extreme Service- 4 oz. knives)	1069		8,066
	CASTERS *(One Choice Required)*			
702193	360° Laminated Caster Wheel w/ Roller	154		1,144
702192	360° Pneumatic Caster Wheel w/ Roller	86		1,248
	OPTIONS			
701150	Lift Chain (1 Required for offset units; 2 Required for Centered Units)	7		99
803211	Additional Operators and Parts Manual			49
02991506	Additional 12 Month Warranty			1,655
02991515	Special Mower Paint			537

Alamo Industrial

(800) 882-5762

SUPER HEAVY DUTY

96" 3-Point Mount Flail Mower

F.O.B. Seguin, TX

STANDARD SPECIFICATIONS

- 96" Cutting Width
- 10-Gauge Unitized Cutter Housing
- 5/16" Side Plates
- 4-1/2" x 5/16" Wall Cuttershaft
- 1-15/16" Bore Greaseable, Self Aligning Cuttershaft Bearings
- Belt Drive from Gearbox to Cuttershaft with Automatic Spring Tension
- 6" Adjustable Rear Roller
- Cutting Capacity: 1" Diameter Grass Material
- Factory Set-Up
- Available in Fine or Coarse-Cut
- 60 HP Gearbox
- CAT 4 Driveline
- Torque Limiter Clutch
- Front & Rear Deflectors
- Available in Fine or Coarse-Cut
- 1/2" - 6" Cutting Height
- Tractor Req: Min 35 HP
- CAT I or CAT II Three-Point Hitch

PRODUCT ORDER CODE	DESCRIPTION	APPROX. WEIGHT		LIST PRICE
	96" SHD FLAIL BASE UNIT *(One Choice Required)*			
SHD96CTRFC	96" SHD, Center Mount (Fine Cut)	1170		7,828
SHD96CTRCC	96" SHD, Center Mount (Course Cut- 3 oz. knives)	1170		7,828
SHD96CTRES	96" SHD, Center Mount (Extreme Service- 4 oz. knives)	1170		8,092
SHD96125FC	96" SHD, Offset 12.5" Right (Fine Cut)	1170		7,828
SHD96125CC	96" SHD, Offset 12.5" Right (Course Cut- 3 oz. knives)	1170		7,828
SHD96125ES	96" SHD, Offset 12.5" Right (Extreme Service- 4 oz. knives)	1170		8,092
SHD96185FC	96" SHD, Offset 18.5" Right (Fine Cut)	1170		7,828
SHD96185CC	96" SHD, Offset 18.5" Right (Course Cut- 3 oz. knives)	1170		7,828
SHD96185ES	96" SHD, Offset 18.5" Right (Extreme Service- 4 oz. knives)	1170		8,092
SHD96245CC	96" SHD, Offset 24.5" Right (Course Cut- 3 oz. knives)	1170		7,828
SHD96245ES	96" SHD, Offset 24.5" Right (Extreme Service- 4 oz. knives)	1170		8,092
SHD96305CC	96" SHD, Offset 30.5" Right (Course Cut- 3 oz. knives)	1170		7,828
SHD96305ES	96" SHD, Offset 30.5" Right (Extreme Service- 4 oz. knives)	1170		8,092
SHD96CTRFCCB	96" SHD, Center Mount, Caster Brackets (Fine Cut)	1249		8,356
SHD96CTRCCCB	96" SHD, Center Mount, Caster Brackets (Course Cut- 3 oz. knives)	1249		8,356
SHD96CTRESCB	96" SHD, Center Mount, Caster Brackets (Extreme Service- 4 oz. knives)	1249		8,620
SHD96125CCCB	96" SHD, Offset 12.5" Right, Caster Brackets (Course Cut 3 oz. knives)	1249		8,356
SHD96125ESCB	96" SHD, Offset 18.5" Right, Caster Brackets (Extreme Service- 4 oz. knives)	1249		8,620
SHD96245CCCB	96" SHD, Offset 24.5" Right, Caster Brackets (Course Cut- 3 oz. knives)	1249		8,356
SHD96245ESCB	96" SHD, Offset 24.5" Right, Caster Brackets (Extreme Service- 4 oz. knives)	1249		8,620
SHD96305CCCB	96" SHD, Offset 30.5" Right, Caster Brackets (Course Cut- 3 oz. knives)	1249		8,356
SHD96305ESCB	96" SHD, Offset 30.5" Right, Caster Brackets (Extreme Service- 4 oz. knives)	1249		8,620
	CASTERS *(One Choice Required)*			
702193	360° Laminated Caster Wheel w/ Roller	154		1,144
702192	360° Pneumatic Caster Wheel w/ Roller	86		1,248
	OPTIONS			
701150	Lift Chain (1 Required for offset units; 2 Required for Centered Units)	7		99
803211	Additional Operators and Parts Manual			49
02991506	Additional 12 Month Warranty			1,655
02991516	Special Mower Paint			586

Alamo Industrial

(800) 882-5762

RX- HEAVY DUTY

60", 72", 84", 96" Lift -Type Rotary Mower

F.O.B. Gibson City, IL

STANDARD SPECIFICATIONS

- RX60 Models- 60" Cutting Width
  RX72 Models- 72" Cutting Width
  RX84 Models- 84" Cutting Width
  RX96 Models- 96" Cutting Width
- All models- 540 PTO Type
- RX60 Models- CAT I Three-Point Hitch
  RX72/RX84/RX96 Models- CAT II Three-Point Hitch
- RX60/RX72 Models- 110 HP Gearbox
  RX 84 Models- 120 HP Gearbox
  RX96 Models- 120 HP Center Power Divider - 110 HP Gearboxes
- CAT 4 Shielded Drivelines
- Slip Clutch Protection
- Pan Blade Carrier w/ Updraft Blades
- 360° Swivel Tailwheel
- Rated For 2" Brush
- Front & Rear Double Chainguards
- 10-Gauge Rolled Top Deck
- 1/4" x 9" Side Skirts
- Continuous Weld Deck to Skirt Seam

PRODUCT ORDER CODE	DESCRIPTION	APPROX. WEIGHT		LIST PRICE
	NOTE: SOME ASSEMBLY IS REQUIRED ON ALL RX UNITS			
	RX60 BASE UNIT			
RX020160	RX60 Lift- Type 540 PTO Model (Round Pan, Single Tail Wheel, w/Double Chain Guards)	1069		4,556
RX020172	RX72 Lift- Type 540 PTO Model (Round Pan, Single Tail Wheel, w/Double Chain Guards)	1252		5,016
RX000184	RX84 Lift- Type 540 PTO Model (Round Pan, Single Tail Wheel, w/Double Chain Guards)	1,381		5,478
RX000284	RX84 Lift-Type 540 PTO Model (Round Pan, Dual Tail Wheel, w/Double Chain Guards)	1,479		5,895
04200096	RX96 Lift-Type 540 PTO (Round Pan, Dual Tail Wheel, w/Double Chain Guards)	2024		8,508
	OPTIONS			
3570	Check Chain Kit (Contains a Set of 2 Chains) (CAT I)	8		204
3571M	Check Chain Kit (Contains a Set of 2 Chains) (CAT II)	15		438
00763420	Offset Adapter Kit (15 3/4 in Offset)- RX84 & RX96 Units only	240		2,836
8B208	Additional Operators Manual- RX 60/72/84 Series			51
8B184	Additional Operators Manual- RX 96 Models			51
02991507	Additional 12 Month Warranty- RX Series			1,552
02991517	Special Mower Paint on RX60 Units			407
02991518	Special Mower Painton RX72 Units			488
02991519	Special Mower Paint on RX84 Units			556
02991520	Special Mower Paint on RX96 Units			652

Alamo Industrial

(800) 882-5762

RX- HEAVY DUTY

84", 96" Pull-Type Rotary Mowers

F.O.B. Gibson City, IL

STANDARD SPECIFICATIONS

- RX84- 84" Cutting Width
  RX96- 96" Cutting Width
- Designed for 540 RPM PTO applications
- 10-Gauge Top Deck
- Pan Blade Carriers w/ Updraft Type Blades
- 4" Blade Overlap
- Replaceable Skid Shoes
- Front & Rear Double Chainguards
- RX84- 120 HP Gearbox
  RX96- 120 HP Center Power Divider - 110HP Outer Gearboxes
- Parking Jack
- Safety Tow Chain
- Pull-Type Design
- 1/4" x 9" Side Skirts
- CAT 4 Shielded Driveline
- Slip Clutch Protection

PRODUCT ORDER CODE	DESCRIPTION	APPROX. WEIGHT		LIST PRICE
NOTE: SOME ASSEMBLY IS REQUIRED ON ALL RX UNITS				
RX96 PULL-TYPE BASE UNIT *(Less Wheels)*				
RX011184	RX84 Pull-Type 540 PTO (Round Pan, Hyd Cyl & Hose Kit, Dual Tail Wheel, w/Double Chain Guards)	1238		7,694
04300096	RX96 Pull-Type 540 PTO (Round Pan, Hyd Cyl & Hose Kit, Dual Tail Wheel, w/Double Chain Guards)	2439		9,728
WHEEL & TIRE OPTIONS *(One Choice Required)*				
00770519	Two Laminated Tires & Wheels	150		435
00770544	Two Used Airplane Tires & Wheels	156		516
00770524	Two 15" Wheels (Wheels Only)	36		117
00770529	Two Implement Tires & Wheels	80		461
OPTIONS				
00778158	Spring Shock Absorber- RX84 & RX96 Units only	25		741
00755234	Stroke Control- RX84 & RX96 Units only	1		41
8B184	Additional Operators Manual- RX 96 Models			51
02991507	Additional 12 Month Warranty- RX Series			1,552
02991519	Special Mower Paint on RX84 Units			556
02991520	Special Mower Paint on RX96 Units			652

Alamo Industrial

(800) 882-5762

RX- SUPER HEAVY DUTY

72" Lift-Type Rotary Mower

F.O.B. Gibson City, IL

STANDARD SPECIFICATIONS

- 72" Cutting Width
- 540 PTO
- CAT I or II Three-Point Hitch
- Pan Blade Carrier
- Slip Clutch Protection
- 7-gauge top deck
- Continuous Weld Deck to Skirt Seam
- Front & Rear Double Chainguards
- Tractor PTO HP Required - 40
- 130 HP Gearbox
- CAT 5 Shielded Drivelines
- 360° Swivel Tailwheel
- Rated For 4" Brush

PRODUCT ORDER CODE	DESCRIPTION	APPROX. WEIGHT		LIST PRICE
NOTE: SOME ASSEMBLY IS REQUIRED ON ALL RX UNITS				
RX72HD BASE UNIT				
RXHD1072	RX72HD Lift- Type 540 PTO Model (Round Pan, Single Tail Wheel, w/Double Chain Guards)	1275		6,349
OPTIONS				
3570	Check Chain Kit (Contains a Set of 2 Chains) (CAT I)	8		204
8B209	Additional Operators Manual- RX72HD Models			51
02991507	Additional 12 Month Warranty- RX Series			1,552
02991518	Special Mower Painton RX72 Units			488

Alamo Industrial

(800) 882-5762

EAGLE MECHANICAL

10', 15' Flex-Wing Rotary Mower

F.O.B. Gibson City, IL

Standard Specifications

- All Models: 540 PTO Only
- Cutting Width: Eagle 10' Models: 126" Eagle 15' Models: 180"
- Overall Width: Eagle 10' Models: 133" Eagle 15' Models: 186"
- Overall Length: Eagle 10' Models: 183" Eagle 15' Models: 183"
- Transport Width: Eagle 10' Models: 88" Eagle 15' Models: 96"
- Cutting Height Range: 1-1/2" Min. to 14-1/2" Max
- Self-Leveling Height Adjustment: Hydraulic Cylinder
- Blade Carrier: Reinforced Pan w/ Updraft Style Blades
- Standard Blades: 1/2" Thick x 4" Wide
- Gearbox Rating: * (Ratings based on actual field performance)
  Power Divider - 235 HP Center & Wing - 205 HP
- Wing Flex Degrees: 90 up, 22 down
- Blade Overlap: 6"
- Jack Stand: Standard
- Required Horsepower: 50
- Weight: Eagle 10' Models: Approximately 3,850 lbs.
  Eagle 15' Models: Approximately 5,435 lbs.
- Safety Tow Chain: Standard
- Output Shaft Diameter: 2-3/8"
- Blade Tip Speed: Center 16,286 FPM
  Wing 16,415 FPM
- Cutting Capacity: 3-1/2" Grass Material
- Driveline Size: Main - Cat 5
  Constant Velocity
  Wing - Cat 5
- Driveline Protection: Slip Clutch
- Deck Thickness: 7 gauge
- Side Skirt: 1/4" x 10-1/2"
- Tires & Wheel: Foam-filled used airplane
- Wing Lift Hydraulics: Standard
- Double Chainguards
- Mower Warranty: One year limited
- Gearbox Warranty: 5 year limited
- Hitch: Drawbar- Pull-Type Unit

PRODUCT ORDER CODE	DESCRIPTION	APPROX. WEIGHT		LIST PRICE
04052115	Eagle 15' Flex-Wing 540 PTO Model (Deck Rings, w/ 6 Foam Filled Airplane Tires)	5435		24,460
04052110	Eagle 10' Flex-Wing 540 PTO Model (Deck Rings, w/ 5 Foam Filled Airplane Tires)	3850		21,191
NOTE: TRACTOR MUST BE EQUIPPED WITH 2 REAR REMOTES FOR PROPER OPERATION				
OPTIONS				
00780570	Winch & Stand	34		795
00769178	Ball Hitch (2-5/16" Ball)	50		504
00773869	Pintle Hitch Kit (Requires Tractor Drawbar Modification)	50		1038
00774802	Single Auxillary Spindle Kit (Requires 1 Additional Tire and Wheel)	24		217
00774803	Dual Auxillary Spindle Kit (Requires 2 Additional Tires and Wheels)	24		433
00779383	Set of Heavy Duty Updraft Blades (5/8" Thick x 4" Wide)- 15' Eagle Model	100		491
00779389	Set of Heavy Duty Updraft Blades (5/8" Thick x 4" Wide)- 10' Eagle Model	100		349
00780567C	Additional Operators Manual- Eagle Series			51
00780567P	Additional Parts Manual- Eagle Series			51
02991508	Additional 12 Month Warranty- Eagle Series			2409
02991522	Special Mower Paint- Eagle 15 Models (Call before quoting)			1094
02991521	Special Mower Paint- Eagle 10 Models (Call before quoting)			803
WHEEL & TIRE OPTIONS (SELECT FROM ONE GROUP OF TIRES) (5 OR 6 REQUIRED)				
00008700	15" Wheel- Rim only (5 Hole Pattern)	18 each		65
00025200	Laminated Tire & Wheel	75 each		209
00749698	Implement Tire & Wheel	40 each		248
00771461	Used Airplane Tire & Wheel (Not Foam Filled)	78 each		273
00787512	Foam-Filled Used Airplane Tire & Wheel (21 x 7- 12 ply) - Standard in base pricing	75 each		289
SHIPPING CONFIGURATION				
00888802	Fully Assembled			N/C
00888703	Unassembled, Shipped in Bundles			N/C

Alamo Industrial

(800) 882-5762

EXTEN-A-KUT II

Rear-Mount Offset Rotary Mower

F.O.B. Seguin, TX

STANDARD SPECIFICATIONS

- 60" Cutting Width
- CAT II Three-Point Hitch
- 60-Gallon Hydraulic Reservoir
- 12'6" Maximum Reach from Right Side of Tractor
- 180° Head Tilt
- 79 HP Hydraulic Pump Attached to a Speed Increaser
- 10-Gauge Deck with Boxed Channel Frame
- 81 HP Hydraulic Motor Directly Splined to Spindle
- 2" Spindle in a Unibody Cast Housing
- Bar Blade Carrier
- 1/2" x 4" Updraft Blades
- Front & Rear Double Chainguards

PRODUCT ORDER CODE	DESCRIPTION	APPROX. WEIGHT		LIST PRICE
	EXTEN-A-KUT II BASE UNIT *(One Choice Required)*			
04700014	Exten-A-Kut II, 540 PTO, Bar Blade Carrier	1620		15,065
04700011	Exten-A-Kut II, 540 PTO, Pan Blade Carrier	1650		15,268
	FRONT GUARD *(One Choice Required)*			
00775779	Double Chain Guard	58		In Base Price
	REAR GUARD *(One Choice Required)*			
00775779	Double Chain Guard	58		In Base Price
	OPTIONS			
02969111	Additional Operators and Parts Manual			52
00777523	Tail Wheel Kit (Ser.#011804 & Up)	72		785
02964902	Cable & Clamp Kit	12		22
02991509	Additional 12 Month Warranty			1,552
02991523	Special Mower Paint			369

Alamo Industrial

(800) 882-5762

GRASS KING

62" & 74" Offset Flail Mowers

F.O.B. Seguin, TX

STANDARD SPECIFICATIONS

- 6"x8"x3/16" Welded Rectangular Tube Frame
- 360 degree Rotating Rear Caster Wheel
- CAT I or CAT II Three-Point Hitch
- 50 to 90 Horsepower Tractor Required
- Hydraulic Piston Pump Rated @ 4000 PSI
- CAT 4 Driveline
- 1 to 4 Speed Increaser
- 14 Gallon Hydraulic Reservoir
- 12 Micron Filtration System
- 10 Gauge Unitized Cutter Housing
- 62" or 74" Cutting Widths
- 1/2" Inboard & 5/16" Outboard End Plates
- Replaceable Skid Shoes
- 4-1/2" x 5/16" Bore, Greasable, Self-Aligning Cuttershaft Bearings
- Belt Drive from Motor to Cuttershaft with Automatic Spring Tension
- 74 HP Motor
- 6" Adjustable Rear Roller
- Front & Rear Deflectors
- Available in Fine or Coarse-Cut
- 1/2" - 6" Cutting Height
- Cutting Capacity: 1" diameter material
- Tractor Req: Min 50-90 HP range

PRODUCT ORDER CODE	DESCRIPTION	APPROX. WEIGHT		LIST PRICE
GRASS KING FLAIL BASE UNIT *(One Choice Required)*				
04006200	Grass King 62" Flail Mower	2038		18,166
04006202	Grass King 62" Flail Mower w/ Extreme Service- 4 oz.Knives	2032		18,722
04007400	Grass King 74" Flail Mower	2080		18,825
04007410	Grass King 74" Flail Mower w/ Extreme Service- 4 oz.Knives	2074		19,046
LIFT PIN OPTIONS *(One Choice Required)*				
02965040	Lift Pin CAT I	8		N/C
02965050	Lift Pin CAT II	8		N/C
OPTIONS				
02965180	Additional Operators and Parts Manual			51
3570GK	Check Chains (CAT I)	8		204
3571MGK	Check Chains (CAT II)	15		438
00772391	Parking Jack (3,000 lb / Side Wind)	11		86
02991510	Additional 12 Month Warranty			776
02991524	Special Mower Paint			369

Alamo Industrial

(800) 882-5762

MCCONNEL PA REAR-MOUNT BOOM

Articulated Rear-Mount Models

F.O.B. Seguin, TX

STANDARD SPECIFICATIONS

- **All Models Feature Welded Tubular Frame Design**
- **PA4330- CAT I or CAT II Three-Point Hitch**
- **PA4745/48- CAT II Three-Point Hitch**
- **All Models Feature Self-Contained Hydraulics**
- **Machine Weight With Flail & Oil:** PA4330- 1,409 lbs/PA4745: 2,151 lbs/ PA48: 2,750 lbs
- **Boom Reach:**
  - PA4330- Up-16'8", Out-13'8"
  - PA4745- Up-16'0", Out-14'0"
  - PA48- Up-16'5", Out-15'0"
- **Minimum Tractor Requirements*:**
  - PA4330- Tractor Weight of 4,010 lbs & 45 PTO hp
  - PA4745- Tractor Weight of 5,512 lbs & 50 PTO hp
  - PA48- Tractor Weight of 6,614 lbs & 60 PTO hp
- **Reservoir Capacity:**
  - PA4330- 17 Gallon
  - PA4745- 39 Gallon
  - PA48- 47 Gallon
- **Output Horsepower:**
  - PA4330- 25 hp (1" Cutting Capacity)
  - PA4745- 45 hp (2" Cutting Capacity)
  - PA48- 54 hp (2" Cutting Capacity)

*** This product line is not recommended for Kubota tractors.**

PRODUCT ORDER CODE	DESCRIPTION	APPROX. WEIGHT		LIST PRICE
	PA 4330- POWER ARM BOOMS			
	Tractors with CAT I or CAT II, three-point hitch, 540 PTO shaft, 45 PTO hp minimum* **Note: Front counterweight may be required**			
	BASE UNIT			
04090265	PA 4330 Rear-Mount RH Boom Assembly (Cable-operated/ w Lift float)	1360		16,078
	MOWER HEADS			
02991665	PA 4330 39" Flail Head Assy.- 1.0m Supercut w/ Universal Knives	418		7,204
02991833	PA 4330 47" Flail Head Assy.- 1.2m Supercut w/ "Duck" Knives	665		8,940
	PA4745/48- POWER ARM BOOMS			
	Tractors with CAT II, three-point hitch, 540 PTO shaft, 60 Eng HP minimum* **Note: Front counterweight may be required.**			
	BASE UNIT			
04090260	PA4745 Rear-Mount RH Boom (Cable-operated/ w Lift float)	1951		17,818
04090262	PA48M Rear-Mount RH Boom Mower (Mid-Cut) (Cable-operated/ w Lift float)	1985		20,661
	MOWER HEADS			
02987798	PA 4745 47" Flail Head Assy.- 1.2m Supercut Flail w/ F91 "Competition" Knives	660		8,045
02987799	PA48 47" Flail Head Assy.- 1.2m Multicut w/Competition Knives	665		8,609
02988618	PA 4745/48 48" Rotary Head Assy. w/Flaps	600		7,799
	SAFETY SCREENS *(One Choice Required)*			
02964407	Universal Safety Screen Kit- Cab Tractors			N/C
00765754	Universal Safety Screen Kit- Rops Tractors			N/C
	OPTIONS			
22674.82	PA 4330 Additional Operators Manual			51
22674.51	PA 4745 Additional Operators Manual			51
41570.69	PA 48 Additional Operators Manual			51
02991512	Additional 12 Month Warranty			1,164

Alamo Industrial

(800) 882-5762

ALAMO® INDUSTRIAL

BUILT SHARPER®

1502 East Walnut St.
Seguin, TX 78155

Sales & Marketing
800-882-5762 830-379-0864 fax
support@alamo-industrial.com

Warranty Registration/Claims
www.alamoparts.com

Return Authorizations
Online Part Orders
Technical Information
www.alamoparts.com
800-356-6286 800-322-5041 fax

www.alamo-industrial.com

MEMBER OF THE ALAMO GROUP
ALWAYS ON THE CUTTING EDGE®

NJPA DISCOUNTS

PRODUCT	DISCOUNT
VERSA SERIES	
VERSA BOOM 17	15%
VERSA BOOM 20	15%
VERSA BOOM 23	15%
VERSA MOWER 60	15%
VERSA MOWER 72	15%
VERSA FLAIL 60	15%
VERSA FLAIL 74	15%
VERSA DITCHER	15%
VERSA LOADER	15%
VERSA INTERCHANGE UNIT	15%
SAMURAI	15%
SA18	15%
SA22	15%
SA25	15%
MACHETE 2	15%
MB18	15%
MB22	15%
MB25	15%
MACHETE-FRONT MOUNT	15%
MB21	15%
MB24	15%
REAR MOUNT BOOMS	15%
RM17	15%
RM20	15%
RM23	15%
HYDRO FLAILS	15%
HY88	15%
HY96	15%
HYDRO ROTARIES	15%
FALCON 10	15%
FALCON 15	15%
INTERSTATER	15%
IS 60" (SINGLE WING)	15%
IS 74" (SINGLE WING)	15%
IS 88" (SINGLE WING)	15%
IN17 (DUAL WING)	15%
IN19 (DUAL WING)	15%
IN21 (DUAL WING)	15%

PRODUCT	DISCOUNT
VERSA-PRO FLAIL	
VP21	15%
SWITCHBLADE SICKLE BAR	
SBS5	15%
SBS6	15%
ROTARIES	
RX60	15%
RX72	15%
RX72HD	15%
RX84	15%
RX96	15%
FLEX-WING ROTARIES	
EG10	15%
EG15	15%
EG20	15%
EXTEN-A-KUT II	15%
GRASS KING FLAILS	
GK62	15%
GK74	15%
MAVERICK BOOM	
MV24	15%
MV30	15%
AXTREME BOOM	
AX18	15%
AX22	15%
AX25	15%
MC CONNEL UNITS	15%
SUPER-HEAVY DUTY FLAIL	15%
SHD62	15%
SHD74	15%
SHD88	15%
SHD96	15%
TURNKEY TRACTORS	15%
TRAXX™ RF	15%
ALL PARTS	LIST

ALAMO INDUSTRIAL®

BUILT SHARPER®

WHOLEGOODS PRICING

NJPA

National Joint Powers Alliance

RFP #070313

Hydro Select Line

Effective February 15, 2013

Hydro Select Line Price Book

Table of Contents

Falcon Hydraulic Rotary	This Series Designated for Grounds Maintenance Contract (RFP# 070313)
Dual Wing Interstater	This Series Designated for Grounds Maintenance Contract (RFP# 070313)
Dual Wing Interstater- Mount Kits	This Series Designated for Grounds Maintenance Contract (RFP# 070313)
Right Hand Interstater	This Series Designated for Grounds Maintenance Contract (RFP# 070313)
Right Hand Interstater- Mount Kits	This Series Designated for Grounds Maintenance Contract (RFP# 070313)
88" Rear Interstater Flail Mowers	This Series Designated for Grounds Maintenance Contract (RFP# 070313)
96" Rear Interstater Flail Mowers	This Series Designated for Grounds Maintenance Contract (RFP# 070313)
Versa Mower	This Series Designated for Grounds Maintenance Contract (RFP# 070313)
Versa Mower- Mount Kits	This Series Designated for Grounds Maintenance Contract (RFP# 070313)
Traxx RF	This Series Designated for Grounds Maintenance Contract (RFP# 070313)
" Turn Key" Tractor Specs	Select Models Designated for Grounds Maintenance Contract (RFP# 070313)
Axtreme2 Boom	
Axtreme2 Boom- Mount Kits	
Machete2 Boom	
Machete2 Boom- Mount Kits	
Machete1 Front Mount Boom	
Maverick Boom	
Maverick Boom- Mount Kits	
Rear Mount Boom	
Samurai Boom	
Samurai Boom- Mount Kits	
Versa Boom	
Versa Boom- Mount Kits	
Versa Pro- Flail Mowers	

FALCON HYDRAULIC ROTARY

Flex- Wing Mower

F.O.B. Seguin, TX

STANDARD SPECIFICATIONS

- 540 PTO
- Available In 10' or 15' Cutting Width
- Minimum Tractor Requirement: 75 PTO hp
- 1/4" x 10-1/2" Bolt-On Side Skirts
- 3 Rear Remotes Required on Tractor For Proper Operation
- 35-Gallon Reservoir with Dual Filtration
- Wing Motor Cutoff - standard
- 63-HP Center Motor, 58-HP wing motor
- 10' Model includes LH- Counterweight Weldment- Concrete Fill not Included
- Standard (1) year limited parts and labor warranty.
- Double Row Chainguards
- Hydraulically Folding Wings
- Pan Assembly
- Updraft Blades
- Replaceable Skid Shoes
- Safety Tow Chain
- Parking Jack
- Easy Clean Top Deck
- Clevis Hitch
- Deck Rings - standard
- Dual Level Lift Rods

PRODUCT ORDER CODE	DESCRIPTION	APPRX. WEIGHT		LIST PRICE
	Base Unit *(One Choice Required)*			
04532210	Falcon 10', 540 rpm, Pan w/Deck Rings			26,238
04522715	Falcon 15', 540 rpm, Pan w/Deck Rings	6,400		31,998
	NOTE: TRACTOR MUST BE EQUIPPED WITH 3 REAR REMOTES FOR PROPER OPERATION			
	Wheel & Tire Options *(One Choice Required)*			
00770532	(Five) Implement Tires & Wheels (6.70-15 / 6 ply)	200		959
00770542	(Five) Recapped Airplane Tires (22 ply)	390		1,640
00770527	(Five) 15" Wheels (Wheels Only)	90		240
00770522	(Five) Laminated Tires & Wheels	375		887
02986580	(Five) Foam Filled Used Airplane Tire & Wheel (Standard Choice For 10 Ft. Models)	375		1,182
00770533	(Six) Implement Tires & Wheels (6.70-15 / 6 ply)	240		1,151
00770543	(Six) Recapped Airplane Tires (22 ply)	468		1,968
00770528	(Six) 15" Wheels (Wheels Only)	108		287
00770523	(Six) Laminated Tires & Wheels	450		1,063
02986581	(Six) Foam Filled Used Airplane Tire & Wheel (Standard Choice for 15 Ft. Models)	450		1,418
	Mount Kits *(One Choice Required)*			
02985210	Case-IH JX-U Series			N/C
02981883	Case-IH MXU & Maxxum Series			N/C
02983169	John Deere 5425/5525/5603/5625			N/C
02991047	John Deere 6000/6010 Series			N/C
00765452	John Deere 6020/6030/7020/7030 Series			N/C
02991275	Kubota M8540/M9540			N/C
02985210	New Holland TL-A Series			N/C
02991409	New Holland T5000 Series			N/C
00751562	New Holland TS90/100/110			N/C
02981883	New Holland TS-A & T6000 Series			N/C
00751565	Universal (Modification/Fabrication Req'd at the Dealer/Customer's Expense)			N/C

FALCON HYDRAULIC ROTARY

Flex- Wing Mower

F.O.B. Seguin, TX

Additional Options				
02985378	Additional Operators and Parts Manuals			51
00774803	Falcon 15 Auxiliary Spindle Kit for Dual Wheels On Both Wings (Requires 2 Additional Tires and Wheels)	45		474
00774802	Falcon 10 Auxiliary Spindle Kit for Dual Wheels On Wing (Requires 1 Additional Tire and Wheel)	24		276
Single Wheel and Tires For Spindle Kits Above				
00786014	27" Foam-Filled Used Airplane Tire & Wheel (Standard Choice Wheel and Tire)	75 each		294
00025200	Laminated Tire & Wheel	75 each		146
00749698	Implement Tire & Wheel	40 each		232
00771461	Used Airplane Tire & Wheel	75 each		248
02991066	Asy, Winch & Stand - Falcon 10/15	34		662
00769178	Captive Ball Hitch (2 5/16" Ball)	50		414
00773869	Pintle Hitch Kit (Requires Tractor Drawbar Modification)	50		840
00756846	Falcon 10: Concrete Filler for Weight Box (706 lbs.)	706		405
00755234	Stroke Control Segments	3		34
02991206	Fan Reverser Kit- Standard Equipment on units after 09/01/2012			526
02791800F1	Special Mower Paint (02791800)			841
00889899F3	Additional 12 Month Warranty (00889899)			4014

INTERSTATER DUAL-WING

18'5", 20'9" Flail Mower

F.O.B. Seguin, TX

BASE UNIT SPECIFICATIONS

- 18'5", or 20'9" Overall Cutting Widths
- Full-Length Welded Tubular Frame with Transport Lock
- 19-Gallon Reservoir with 12 Micron Filtration
- Tandem Piston Pumps Rated @ 48 GPM @ 3800 PSI
- 4-Spool Valve with Detent Position
- Standard (1) year limited parts and labor warranty

WING MOWER SPECIFICATIONS

- 62", 74", or 88" Cutting Widths
- 1/2" Inboard & 5/16" Outboard Side Plates
- Replaceable Skid Shoes
- 4-1/2" x 5/16" Wall Cuttershaft
- 1-5/16" Bore Greaseable, Self-aligning Cuttershaft Bearings
- 53 HP Piston Motor
- Belt Drive From Motor To Cuttershaft with Automatic Spring Tension
- 6" Adjustable Rear Roller
- 1/2" to 6" Cutting Height
- Available in Fine or Coarse-Cut
- Front and Rear Safety Deflectors
- Automatic Cut-Off Switch
- Lift Cylinder Capable of 14" Vertical Lift
- Tilt Cylinder Capable of 45° Down & 90° Up
- 10-Gauge Unitized Cutter Housing

REAR MOWER SPECIFICATIONS

- 88" or 96" Cutting Width (Depending on trctr mnt. kit)
- 10-Gauge Unitized Cutter Housing
- 5/16" Side Plates
- CAT I or CAT II Three-Point Hitch
- 4-1/2" x 5/16" Wall Cuttershaft
- 1-5/16" Bore Greaseable, Self-aligning Cuttershaft Bearings
- 60 HP Gearbox
- 6" Adjustable Rear Roller
- 1/2" to 6" Cutting Height
- Available in Fine or Coarse-Cut
- Torque Limiter Clutch
- Front and Rear Safety Deflectors
- CAT 4 Driveline
- Belt Drive From Gearbox To Cuttershaft with Automatic Spring Tension

PRODUCT ORDER CODE	DESCRIPTION	APPRX. WEIGHT		LIST PRICE
INTERSTATER BASE UNIT *(One Choice Required)*				
988030	18'5" Fine-Cut	4560		43,645
988029	18'5" Coarse-Cut (3 oz. Knives)	4570		43,588
988032	18'5" Extreme Service (4 oz. Knives)	4574		43,910
988034	20'9" Fine-Cut	4611		44,332
988033	20'9" Coarse-Cut (3 oz. Knives)	4620		44,276
988036	20'9" Extreme Service (4 oz. Knives)	4624		44,595
MOUNT KIT *(One Choice Required)* *See Mount Kit Page for Descriptions & Part Numbers*				
OPTIONS				
803213	Additional Operators and Parts Manual			52
ALL INTERSTATERS PURCHASED FOR INSTALLATION ON 4WD TRACTORS MUST INCLUDE CLIPPED FOOTGUARDS ON ORDER				
107520	74" Left-Clipped Foot Guard	37		331
107519	74" Right-Clipped Foot Guard	37		359
107525	88" Left-Clipped Foot Guard	42		430
107524	88" Right-Clipped Foot Guard	42		430
02972480	Left-Wing Remote Positioning System	65		2,915
803399	Mounting Labor & Oil			7,052
02791800DW	Special Mower Paint (02791800)			1,237
02968967	Special Tractor Paint			5,537
00889899DW	Additional 12 Month Warranty (00889899)			4,014

DUAL-WING INTERSTATER

18'5", 20'9" MOUNT KIT OPTIONS

F.O.B. Seguin, TX

TRACTOR DESCRIPTION	MOUNT KIT	REAR OFFSET	MAXIMUM TIRE SIZE			LIST PRICE
			2WD Front	4WD Front	Rear	
Case IH						
Case-IH JX1080U/1090U/1100U Cab 2 & 4wd 2004-2006 (Dual Wing Model- 5" Offset Left & Right)* (27 gal repl fuel tank included)	02980423 02983400	96" Ctr	10.00-16	11.2-24	18.4-30	13,858
Case-IH JX1080U/1090U/1100U Rops 2wd 2004-2006 (Dual Wing Model- 5" Offset Left & Right)* (27 gal repl fuel tank included)	02980423 02983273	96" Ctr	10.00-16	N/A	18.4-30	13,858
Case-IH MXU100/110 Cab 2 & 4wd 2004-2006 (Dual Wing Model- 5" Offset Left & Right)* (51 gal repl fuel tank & exhaust pipe included)	02980935 02980823	96" Ctr	N/A	12.4-24	18.4-30	13,858
Case-IH MXU100/110 Rops 2 & 4wd 2004-2006 (Dual Wing Model- 5" Offset Left & Right)* (51 gal repl fuel tank & exhaust pipe included)	02980935 02980919	96" Ctr	N/A	12.4-24	18.4-30	13,858
Case-IH MXU115/125/130/135 Cab 2 & 4wd 2004-2006 (Dual Wing Model- 5" Offset Left & Right)* (51 gal repl fuel tank & exhaust pipe included)	02981078 02981009	96" Ctr	N/A	12.4-24	18.4-30	13,858
Case-IH MXU115/125/130/135 Cab/2&4wd 2004-2006 (Dual Wing Model- 5" Offset Left & Right/Using Tractor Hyd) (51 gal repl fuel tank & exhaust pipe included)	02981078 02981087	96" Ctr	N/A	12.4-24	18.4-30	13,858
Case-IH MXU115/125/130/135 Rops 2 & 4wd 2004-2006 (Dual Wing Model- 5" Offset Left & Right)* (51 gal repl fuel tank & exhaust pipe included)	02981078 02983720	96" Ctr	N/A	12.4-24	18.4-30	13,858
John Deere						
JD 5085-5100-5115 M- Series cab 4wd 2012-2013 (Dual Wing Model- 5" Offset Left & Right)*	02992041 02992036	96" Ctr	N/A	12.4-24	18.4-34	13,858
JD 5425/5525 Cab 4wd 2005-2008 (Dual Wing Model- 5" Offset Left & Right)*	02984649 02984646	96" Ctr	N/A	11.2-24	16.9-30	13,858
JD 5425/5525 Rops 2wd w/ Straddle Platform 2005-2008 (Dual Wing Model- 5" Offset Left & Right)*	02983067 02982994	96" Ctr	7.50-16	N/A	16.9-30	13,858
JD 6615/6715 Rops 2wd 2003-2005 (Dual Wing Model- 5" Offset Left & Right)*	02981706 02983950	96" OL 5"	10.00-16	N/A	18.4-38	13,858
JD 6120/6220/6320/6420 Cab 4wd 2002-2007 (Dual Wing Model- 5" Offset Left & Right)*	108776 02979604	96" Ctr	N/A	12.4-24	18.4-30	13,858
JD 6120/6220/6320/6420 Rops 2 & 4wd 2002-2007 (Dual Wing Model- 5" Offset Left & Right)*	108776 02979815	96" Ctr	10.00-16	12.4-24	18.4-30	13,858
JD 6330/6430 "Mid-Spec" Cab 4wd 2007-2012 (Dual Wing Model- 5" Offset Left & Right)*	02985892 02985893	96" Ctr	N/A	13.6-24	18.4-38	13,858
JD 6330/6430 "Mid-Spec" Cab 2wd 2007-2012 (Dual Wing Model- 5" Offset Left & Right)*	108776 02986889	96" Ctr	10.00-16	N/A	18.4-34	13,858
JD 6330/6430 "Mid-Spec" ROPS 4wd 2007-2012 (Dual Wing Model- 5" Offset Left & Right)*	108776 02988706	96" Ctr	N/A	12.4-24	18.4-34	13,858

Note that ALL part numbers listed must be included with your order.

DUAL-WING INTERSTATER

18'5", 20'9" MOUNT KIT OPTIONS

F.O.B. Seguin, TX

TRACTOR DESCRIPTION	MOUNT KIT	REAR OFFSET	MAXIMUM TIRE SIZE			LIST PRICE
			2WD Front	4WD Front	Rear	
John Deere						
JD 7130/7230 "Mid-Spec" Cab 4wd 2007-2012 (Dual Wing Model- 10" Offset Left)*	02981706 02988897	96" Ctr	N/A	13.6-28	18.4-38	13,858
JD 7130/7230 "Mid-Spec" Cab 2wd 2007-2012 (Dual Wing Model- 5" Offset Left)*	02991026 02988897	96" Ctr	N/A	13.6-28	18.4-38	13,858
New Holland						
NH T5040/5050/5060/5070 Cab 2 & 4wd 2008-2012 (Dual Wing Model- 5" Offset Left & Right)* (27 gal repl fuel tank included)	02980423 02986612	96" Ctr	10.00-16	11.2-24	18.4-30	13,858
NH T5040/5050/5060/5070 Rops 2wd 2008-2012 (Dual Wing Model- 5" Offset Left & Right) (27 gal repl fuel tank included)	02980423 02987792	96" Ctr	10.00-16	N/A	18.4-30	13,858
NH T6010/6020/6040/6060 Cab 2wd 2008-2012 (Dual Wing Model- 5" Offset Left & Right) (51 gal repl fuel tank & exhaust pipe included)	02980935 02986403	96" Ctr	10.00-16	N/A	18.4-30	13,858
NH T6010/6020/6040/6060 Cab 4wd 2008-2012 (Dual Wing Model- 5" Offset Left & Right/Using Tractor Hydraulics) (51 gal repl fuel tank & exhaust pipe included)	02980935 02988759	96" Ctr	N/A	14.9-24	18.4-34	13,858
NH T6010/6020/6040/6060 Cab 4wd 2008-2012 (Dual Wing Model- 5" Offset Left & Right) (51 gal repl fuel tank & exhaust pipe included)	02987990 02987818	96" Ctr	N/A	14.9-24	18.4-34	13,858
NH T6030/6050 Cab 2wd 2008-2012 (Dual Wing Model- 5" Offset Left & Right)* (51 gal repl fuel tank & exhaust pipe included)	02981078 02986365	96" Ctr	11.00-16	N/A	18.4-30	13,858
NH T6030/6050 Cab 4wd 2008-2012 (Dual Wing Model- 5" Offset Left & Right)* (51 gal repl fuel tank & exhaust pipe included)	02981078 02987119	96" Ctr	N/A	14.9-24	18.4-34	13,858
NH T6030/6050 Cab 4wd 2008-2012 w/ Large Tires (Dual Wing Model- 5" Offset Left & Right)* (51 gal repl fuel tank & exhaust pipe included)	02991113 02991115	96" Ctr	N/A	14.9-28	18.4-38	13,858
NH TB100/110 Rops 2wd 2005-2012 (Dual Wing Model- 5" Offset Left & Right)*	02980834 02980178	96" Ctr	N/A	12.4-24	18.4-30	13,858
NH TL80/90/100 Cab 2wd 2004-2007 (Dual Wing Model- 5" Offset Left & Right)* (27 gal repl fuel tank included)	02980423 02981017	96" Ctr	10.00-16	N/A	18.4-30	13,858
NH TL80/90/100 ROPS 2wd 2004-2007 (Dual Wing Model- 5" Offset Left & Right)* (27 gal repl fuel tank included)	02980423 02980333	96" Ctr	10.00-16	N/A	18.4-30	13,858
NH TL80A/90A/100A Cab 2 & 4wd 2004-2007 (Dual Wing Model- 5" Offset Left & Right)* (27 gal repl fuel tank included)	02980423 02983400	96" Ctr	10.00-16	11.2-24	18.4-30	13,858
NH TL80A/90A/100A ROPS 2wd 2004-2007 (Dual Wing Model- 5" Offset Left & Right) (27 gal repl fuel tank included)	02980423 02983273	96" Ctr	10.00-16	N/A	18.4-30	13,858
NH TM115/125/135/150 Cab 2wd 2000-2002 (Dual Wing Model- 10" Offset Left)*	02978837 02978834	96' OL 5"	11.00-16	N/A	18.4-34	13,858
NH TM120/130/140/155 Cab 2wd 2002-2007 (Dual Wing Model- 10" Offset Left)*	02978837 02979781	96' OL 5"	11.00-16	N/A	18.4-34	13,858

Note that ALL part numbers listed must be included with your order.

DUAL-WING INTERSTATER

18'5", 20'9" MOUNT KIT OPTIONS

F.O.B. Seguin, TX

TRACTOR DESCRIPTION	MOUNT KIT	REAR OFFSET	MAXIMUM TIRE SIZE 2WD Front	4WD Front	Rear	LIST PRICE
New Holland						
NH TS90/100/110 Cab 4wd 1999-2003 (Dual Wing Model- No Offset)* (35.5 gal repl fuel tank included)	108415 704410	96" Ctr	N/A	12.4-24	18.4-30	13,858
NH TS90/100/110 Rops 2wd w/ Flat Platfrom 1999-2003 (Dual Wing Model- 10" Offset Left)* (35.5 gal repl fuel tank included)	108400 704401	96' OL 5"	10.00-16	N/A	18.4-30	13,858
NH TS90/100/110 Rops 4wd w/ Flat Platfrom 1999-2003 (Dual Wing Model- No Offset)* (35.5 gal repl fuel tank included)	108415 704484	96' OL 5"	N/A	12.4-24	18.4-30	13,858
NH TS100A/110A Cab 2 & 4wd 2003-2006 (Dual Wing Model- 5" Offset Left & Right)* (51 gal repl fuel tank & exhaust pipe included)	02980935 02980823	96" Ctr	N/A	12.4-24	18.4-30	13,858
NH TS100A/110A Rops 2 & 4wd 2003-2006 (Dual Wing Model- 5" Offset Left & Right)* (51 gal repl fuel tank & exhaust pipe included)	02980935 02980919	96" Ctr	N/A	12.4-24	18.4-30	13,858
NH TS115A/125A/130A/135A Cab/2&4wd 2003-2006 (Dual Wing Model- 5" Offset Left & Right)* (51 gal repl fuel tank & exhaust pipe included)	02981078 02981009	96" Ctr	N/A	12.4-24	18.4-30	13,858
NH TS115A/125A/130A/135A Cab 2 & 4wd 2003-2006 (Dual Wing Model- 5" Offset Left & Right/Using Tractor Hyd)* (51 gal repl fuel tank & exhaust pipe included) (Tractor must have four rear remotes)	02981078 02981087	96" Ctr	N/A	12.4-24	18.4-30	13,858
NH TS115A/125A/130A/135A Rops 2 & 4wd 2003-2006 (Dual Wing Model- 5" Offset Left & Right)* (51 gal repl fuel tank & exhaust pipe included)	02981078 02983720	96" Ctr	10.00-16	12.4-24	18.4-30	13,858
NH TS6.110/TS6.115/TS6.120 Cab 2 & 4wd 2012-2013 (Dual Wing Model- 5" Offset Left & Right)	TBD	96" Ctr	10.00-16	12.4-24	18.4-30	13,858
NH TS6.125/TS6.140 Cab 2 & 4wd 2012-2013 (Dual Wing Model- 5" Offset Left & Right)	TBD	96" Ctr	10.00-16	12.4-24	18.4-30	13,858

Note that ALL part numbers listed must be included with your order.

RIGHT-HAND INTERSTATER

62", 74", 88" Flail Mowers

F.O.B. Seguin, TX

STANDARD SPECIFICATIONS

- 62", 74", or 88" Cutting Widths
- Full-Length Welded Tubular Frame with Transport Lock
- 19-Gallon Reservoir with 12 Micron Filtration
- Piston Pump Rated @ 24 GPM @ 3800 PSI
- 2-Spool Valve with Detent Position
- 1-5/16" Bore Greaseable, Self-aligning Cuttershaft Bearings
- Lift Cylinder Capable of 14" Vertical Lift
- Tilt Cylinder Capable of 45° Down & 90° Up
- 10-Gauge Unitized Cutter Housing
- 1/2" Inboard & 5/16" Outboard Side Plates
- Replaceable Skid Shoes
- 4-1/2" x 5/16" Wall Cuttershaft
- Automatic Cut-Off Switch
- 53 HP Piston Motor
- Belt Drive From Motor To Cuttershaft with Automatic Spring Tension
- 6" Adjustable Rear Roller
- 1/2" to 6" Cutting Height
- Available in Fine or Coarse-Cut
- Front and Rear Safety Deflectors
- Standard (1) year limited parts and labor warranty

PRODUCT ORDER CODE	DESCRIPTION	APPRX. WEIGHT		LIST PRICE
RIGHT HAND INTERSTATER BASE UNIT				
988002	62" Fine-Cut			19,730
988001	62" Coarse-Cut (3 oz. Knives)			19,701
988004	62" Extreme Service (4 oz. Knives)			19,840
988005	74" Coarse-Cut (3 oz. Knives)	1200		20,553
988008	74" Extreme Service (4 oz. Knives)	1205		20,693
988009	88" Coarse-Cut (3 oz. Knives)	1250		20,780
988012	88" Extreme Service (4 oz. Knives)	1255		20,915
OPTIONS				
803213	Additional Operators and Parts Manual			52
ALL INTERSTATERS PURCHASED FOR INSTALLATION ON 4WD TRACTORS MUST INCLUDE A CLIPPED FOOTGUARD ON ORDER				
107532	62" Right-Clipped Foot Guard	32		417
107519	74" Right-Clipped Foot Guard	37		359
107524	88" Right-Clipped Foot Guard	42		430
801022	Mounting Labor & Oil, CAB Tractor			4,337
02791800IR	Special Mower Paint (02791800)			797
02968967	Special Tractor Paint			5,537
00889899I1	Additional 12 Month Warranty (00889899)			4,014

RIGHT-HAND INTERSTATER

62", 74", 88" Mount Kit Options

F.O.B. Seguin, TX

TRACTOR DESCRIPTION	MOUNT KIT COMP BOX	REAR OFFSET	MAXIMUM TIRE SIZE 2WD Front	4WD Front	Rear	LIST PRICE
Case IH						
Case-IH C70/80/90/100- CX Series Rops 2wd w/ Utility Bolster 1998-2002 (RH-Single Wing- No Offset)	02977885 02977907	88" Ctr 96" Ctr	11L-16	N/A	16.9-30	$8,918
Case-IH Farmall 95C Cab 4wd 2008-2012 (RH-Single Wing- Offset 13.5")	02990821 02990822	88" Ctr 96" Ctr	N/A	11.2-20	16.9-30	$8,918
Case-IH 695/895 Cab 4wd 1991-1994 (RH-Single Wing- Centered)	106832 703735	88" Ctr 96" Ctr	N/A	7.5-18	18.4-30	$8,918
Case-IH JX1060C/1070C/1075C Cab 2wd 2004-2008 (RH-Single Wing- Offset 5")	108777 704548	88"OR 8.5" 96"OR 12.5"	9.5L-15	N/A	16.9-30	$8,918
Case-IH JX1060C/1070C/1075C Cab/2wd 2004-2008 (RH-Single Wing- Offset 5"/ Using Tractor Hydraulics)	108777 02980173	88"OR 8.5" 96"OR 12.5"	9.5L-15	N/A	16.9-30	$8,285
Case-IH JX1060C/1070C/1075C Cab 4wd 2004-2008 (RH-Single Wing- Offset 5")	02984334 02984335	88"OR 14.5" 96"OR 12.5"	N/A	11.2-20	14.9-28	$8,918
Case-IH JX1060C/1070C/1075C Rops 2wd 2004-2008 (RH-Single Wing- Offset 5")	108775 704546	88"OR 8.5" 96"OR 12.5"	11L-15	N/A	16.9-30	$8,918
Case-IH JX1060C/1070C/1075C ROPS/2wd 2004-2008 (RH-Single Wing- Offset 5"/ Using Tractor Hydraulics)	108775 02980457	88"OR 8.5" 96"OR 12.5"	11L-15	N/A	16.9-30	$8,285
Case-IH JX1080U/1090U/1100U Cab 2wd 2004-2008 (RH-Single Wing- Offset 5")	02983494 02983537	88"OR 8.5" 96" Ctr	11L-15	11.2-24	16.9-34	$8,918
Case-IH JX1080U/1090U/1100U Rops 2wd 2004-2008 (RH-Single Wing- Offset 5")	02980206 02983546	88"OR 8.5" 96" Ctr	10.00-16	N/A	16.9-34	$8,918
Case-IH MXU100/110 Cab 4wd 2004-2006 (RH-Single Wing- Offset 5")	02981068 02981075	88"OR 8.5" 96" Ctr	N/A	12.4-24	18.4-30	$8,918
Case-IH MXU100/110 Rops 4wd 2004-2006 (RH-Single Wing- Offset 5")*	02981068 02981072	88"OR 8.5" 96" Ctr	N/A	12.4-24	18.4-30	$8,918
Case-IH MXU115/125/130/135 Cab 4wd 2004-2006 (RH-Single Wing- Offset 5")*	02982986 02983000	88"OR 8.5" 96" Ctr	N/A	12.4-24	18.4-30	$8,918
John Deere						
JD 5065/5075M- Series ROPS 2wd 2008-2011 (RH-Single Wing- Offset 5")	02988389 02988729	88"OR 8.5" 96" Ctr	11L-15	N/A	16.9-30	$8,918
JD 5065/5075M- Series Cab 2wd 2008-2011 (RH-Single Wing- Offset 5"/ Using Loader Joystick Control)	02988389 02988338	88"OR 8.5" 96" Ctr	11L-15	N/A	16.9-30	$8,918
JD 5083/5093/5101E- Series Cab 4wd Late 2011-2012 Tier III Ribbed Style Axle (RH-Single Wing- Offset 5")	02990386 02991126	88"OR 8.5" 96" Ctr	N/A	12.4-24	18.4-30	$8,918
JD 5083/5093/5101E- Series Cab 4wd 2008- Early 2011 Tier II Ribbed Style Axle (RH-Single Wing- Offset 5"/ Using Loader Joystick Control)	02990386 02990387	88"OR 8.5" 96" Ctr	N/A	12.4-24	18.4-30	$8,918
JD 5083/5093/5101E- Series Cab 4wd Late 2011-2012 Tier III Ribbed Style Axle (RH-Single Wing- Offset 5")	02990386 02991126	88"OR 8.5" 96" Ctr	N/A	12.4-24	18.4-30	$8,918
JD 5083/5093/5101E- Series Cab 4wd Late 2011-2012 Tier III Ribbed Style Axle (RH-Single Wing- Offset 5"/ Using Loader Joystick Control)	02990386 02990500	88"OR 8.5" 96" Ctr	N/A	12.4-24	18.4-30	$8,918
JD 5085/5095/5105M- Series Cab 4wd 2008-2011 (RH-Single Wing- Offset 5")	02991095 02991097	88"OR 8.5" 96" Ctr	N/A	11.2-24	16.9-30	$8,918
JD 5085/5095/5105M- Series Cab 4wd 2012-2013 (RH-Single Wing- Offset 5")	02992041 02992036	88"OR 8.5" 96" Ctr	N/A	11.2-24	16.9-30	$8,918
JD 5220/5320 Mid-Spec Cab 2wd 2002-2004 (RH-Single Wing- Offset 5")	02979602 02980121	88"OR 8.5" 96" Ctr	11L-15	N/A	16.9-30	$8,918
JD 5220/5320 Mid-Spec ROPS 2wd 2002-2004 (RH-Single Wing- Offset 5")	02979602 02980267	88"OR 8.5" 96" Ctr	11L-15	N/A	16.9-30	$8,918
JD 5225/5325 Cab/2wd 2005-2008 (RH Only/Aux Pump)	02983231 02983224	88"OR 8.5" 96" Ctr	6.50-16	N/A	13.6-28	$8,918

Note: Please list BOTH mount kit part numbers on your order.

RIGHT-HAND INTERSTATER

62", 74", 88" Mount Kit Options

F.O.B. Seguin, TX

TRACTOR DESCRIPTION	MOUNT KIT COMP BOX	REAR OFFSET	MAXIMUM TIRE SIZE 2WD Front	4WD Front	Rear	LIST PRICE
John Deere						
JD 5225/5325 Cab/4wd 2005-2008 (RH Only/Aux Pump)	02983848 02983858	88"OR 8.5" 96" Ctr	N/A	11.2-24	16.9-30	$8,918
JD 5420/5520 Cab 4wd 2002-2004 (RH-Single Wing- Offset 5")	02978138 02980203	88"OR 8.5" 96" Ctr	N/A	11.2-24	16.9-30	$8,918
JD 5420/5520 Rops 4wd 2002-2004 (RH-Single Wing- Offset 5")	02978138 02980632	88"OR 8.5" 96" Ctr	N/A	11.2-24	16.9-30	$8,918
JD 5425/5525 Cab 4wd 2005-2008 (RH-Single Wing- Offset 5")	02978138 02983640	88"OR 8.5" 96" Ctr	N/A	11.2-24	16.9-30	$8,918
JD 5425/5525 Cab 4wd 2005-2008 (RH-Single Wing- Offset 5"/ Using Tractor Hydraulics)	02978138 02984124	88"OR 8.5" 96" Ctr	N/A	11.2-24	16.9-30	$8,918
JD 5425/5525 Rops 2wd 2005-2008 (RH-Single Wing- Offset 5")	02985265 02985266	88"OR 8.5" 96" Ctr	7.50-16	N/A	16.9-30	$8,918
JD 6120/6220/6320/6420 Cab 4wd 2002-2007 (RH-Single Wing- Offset 5")	02978882 02978908	88"OR 8.5" 96" Ctr	N/A	12.4-24	18.4-30	$8,918
JD 6120/6220/6320/6420 Cab 4wd 2002-2007 (RH-Single Wing- Offset 5"/ Using Tractor Hydraulics)	02978882 02978879	88"OR 8.5" 96" Ctr	N/A	12.4-24	18.4-30	$8,918
JD 6215/6415 Cab/2&4wd (RH Only/Aux Pump)	02978882 02978908	88"OR 8.5" 96" Ctr	N/A	12.4-24	18.4-34	$8,918
JD 6215/6415 Cab/2&4wd (RH Only/Tractor Hyd) (2nd Remote Req'd)	02978882 02978879	88"OR 8.5" 96" Ctr	N/A	12.4-24	18.4-34	$8,285
JD 6330/6430 Mid-Spec & Premium Cab 4wd 2007-2012 (RH-Single Wing- Offset 5")	02978882 02990429	88"OR 8.5" 96" Ctr	N/A	13.6-28	18.4-34	$8,918
JD 6330/6430 Mid-Spec & Premium Cab 4wd 2007-2012 (RH-Single Wing- Offset 5"/ Using Tractor Hydraulics)	02978882 02989257	88"OR 8.5" 96" Ctr	N/A	13.6-28	18.4-34	$8,285
JD 6330/6430 Mid-Spec & Premium Cab 2wd 2007-2012 (RH-Single Wing- Offset 5")	02986192 02986193	88"OR 8.5" 96" Ctr	10.00-16	N/A	18.4-34	$8,918
JD 6330/6430 Mid-Spec & Premium Cab 2wd 2007-2012 (RH-Single Wing- Offset 5"/ Using Tractor Hydraulics)	02986192 02990077	88"OR 8.5" 96" Ctr	10.00-16	N/A	18.4-34	$8,285
JD 7130/7230 Mid-Spec Cab 4wd 2007-2012 (RH-Single Wing- Offset 5")	02989681 02989682	88"OR 8.5" 96" Ctr	N/A	13.6-28	18.4-34	$8,918
McCormick						
McCormick CX75/85/95/105 TII Models Cab 2wd 2003-2010 (RH-Single Wing- Offset 5")	02982467 02982079	88"OR 8.5" 96" Ctr	11L-16	N/A	16.9-30	$8,918
McCormick CX75/85/95/105 TII Models Cab 4wd 2003-2010 (RH-Single Wing- Offset 5")	02982218 02982079	88"OR 8.5" 96" Ctr	N/A	11.2-24	16.9-30	$8,918
Massey Ferguson						
MF 492 Cab 4wd 2004-2006 (RH-Single Wing- Offset 5")	02982944 02982973	88"OR 8.5" 96" Ctr	N/A	12.4-24	18.4-30	$8,918
MF 4335/4345/4355 Cab 4wd w/ Standard Hood 2001-2003 (RH-Single Wing- Offset 5")	02983792 02979222	88"OR 8.5" 96" Ctr	N/A	11.2-24	16.9-30	$8,918
MF 4335/4345/4355 Cab 4wd w/ Standard Hood 2001-2003 (RH-Single Wing- Offset 5"/ Using Tractor Hydraulics)	02983792 02989305	88"OR 8.5" 96" Ctr	N/A	11.2-24	16.9-30	$8,285
MF 5435/5445/5455 Cab 2wd w/ Standard Hood 2005-2008 (RH-Single Wing- Offset 5")	02981881 02981312	88"OR 8.5" 96" Ctr	7.50-16	N/A	16.9-28	$8,918

Note: Please list BOTH mount kit part numbers on your order.

RIGHT-HAND INTERSTATER

62", 74", 88" Mount Kit Options

F.O.B. Seguin, TX

TRACTOR DESCRIPTION	MOUNT KIT	REAR OFFSET	MAXIMUM TIRE SIZE 2WD Front	MAXIMUM TIRE SIZE 4WD Front	MAXIMUM TIRE SIZE Rear	LIST PRICE
New Holland						
NH T4020/4030 "Deluxe" Cab 2wd 2008-2012 (RH-Single Wing-Offset 5")	02987359 02986821	88"OR 8.5" 96"OR 12.5"	11L-15	N/A	16.9-30	$8,918
NH T4020/4030 "Deluxe" Cab 2wd 2008-2012 (RH-Single Wing-Offset 5"/ Using Tractor Hydraulics)	02987359 02986821	88"OR 8.5" 96"OR 12.5"	11L-15	N/A	16.9-30	$8,285
NH T4020/4030 "Deluxe" Cab 2wd 2008-2012 (RH-Single Wing-Offset 5"/ Using Tractor Loader Hydraulics)	02987359 02986821	88"OR 8.5" 96"OR 12.5"	11L-15	N/A	16.9-30	$8,918
NH T4020/4030 "Deluxe" Cab 4wd 2008-2012 (RH-Single Wing-Offset 5")	02987887 02987922	88"OR 14.5" 96"OR 12.5"	N/A	13.6-16	16.9-24	$8,918
NH T4020/4030 "Standard" Rops 2wd 2008-2012 (RH-Single Wing-Offset 5")	02987048 02987586	88"OR 8.5" 96"OR 12.5"	7.50-16	N/A	16.9-30	$8,918
NH T4040/4050 "Deluxe" Cab 2wd 2008-2012 (RH-Single Wing-Offset 5")	02986812 02986821	88"OR 8.5" 96"OR 12.5"	8.5L-15	N/A	16.9-30	$8,918
NH T4040/4050 "Deluxe" Cab 4wd 2008-2012 (RH-Single Wing-Offset 5")	02990821 02990822	88"OR 14.5" 96"OR 12.5"	N/A	11.2-20	16.9-30	$8,918
NH T5040/5050/5060/5070 Cab 2 & 4wd 2008-2012 (RH-Single Wing-Offset 5")	02983494 02986605	88"OR 8.5" 96" Ctr	10.00-16	11.2-24	18.4-30	$8,918
NH T5040/5050/5060/5070 Cab 2 & 4wd 2008-2012 (RH-Single Wing-Offset 5"/ Using Tractor Hydraulics)	02983494 02989472	88"OR 8.5" 96" Ctr	10.00-16	11.2-24	18.4-30	$8,285
NH T5040/5050/5060/5070 Rops 2wd 2008-2012 (RH-Single Wing-Offset 5")	02980206 02988018	88"OR 8.5" 96" Ctr	10.00-16	N/A	18.4-30	$8,918
NH T6030/6050/6070 Cab 2 & 4wd 2008-2012 (RH-Single Wing-Offset 5")	02982986 02986187	88"OR 8.5" 96" Ctr	11.00-16	14.9-24	18.4-34	$8,918
NH T6030/6050/6070 Cab 2 & 4wd 2008-2012 (RH-Single Wing-Offset 5"/ Using Tractor Hydraulics)	02982986 02989446	88"OR 8.5" 96" Ctr	11.00-16	14.9-24	18.4-34	$8,285
NH T6030/6050/6070 Rops 2wd 2008-2012 (RH-Single Wing- Offset 5")	02982986 02989451	88"OR 8.5" 96" Ctr	11.00-16	N/A	18.4-30	$8,918
NH T7030/7040/7050/7060 Cab 4wd 2008-2012 (RH-Single Wing-Offset 5")	02982986 02990749	88"OR 8.5" 96" Ctr	N/A	14.9-30	18.4-42	$8,918
NH TB100/110 Rops 2 & 4wd 2005-2011 (RH-Single Wing- Offset 5")	02980834 02980255	88"OR 8.5" 96" Ctr	N/A	12.4-24	18.4-30	$8,918
NH TL80/90/100 Cab 2wd 1999--2004 (RH-Single Wing- Offset 5")	02980206 02983635	88"OR 8.5" 96" Ctr	10.00-16	N/A	16.9-34	$8,918
NH TL80A/90A/100A Cab 2 & 4wd 2004-2007 (RH-Single Wing-Offset 5")	02983494 02983537	88"OR 8.5" 96" Ctr	10.00-16	11.2-24	16.9-34	$8,918
NH TL80A/90A/100A Rops 2 & 4wd 2004-2007 (RH-Single Wing-Offset 5")	02980206 02983546	88"OR 8.5" 96" Ctr	10.00-16	11.2-24	16.9-34	$8,918
NH TN55D/65D/70D/75D Cab 2wd 1994-2004 (RH-Single Wing-Offset 8.75")	108777 704548	88"OR 8.5" 96"OR 12.5"	9.5L-15	N/A	16.9-30	$8,918
NH TN55D/65D/70D/75D Cab 2wd 1998-2004 (RH-Single Wing-Offset 8.75"/ Using Tractor Hydraulics)	108777 02980173	88"OR 8.5" 96"OR 12.5"	9.5L-15	N/A	16.9-30	$8,285
NH TN55/65/70/75 Rops 2wd 1998-2004 (RH-Single Wing- Offset 8.75")	108775 704546	88"OR 8.5" 96"OR 12.5"	11L-15	N/A	16.9-30	$8,918
NH TN55/65/70/75 Rops 2wd 1999-2004 (RH-Single Wing- Offset 8.75"/ Using Tractor Hydraulics)	108775 02980457	88"OR 8.5" 96"OR 12.5"	11L-15	N/A	16.9-30	$8,285
NH TN60DA/70DA/75DA Cab/2wd 2004-2008 (RH-Single Wing-Offset 8.75")	108777 704548	88"OR 8.5" 96"OR 12.5"	9.5L-15	N/A	16.9-30	$8,918

Note: Please list BOTH mount kit part numbers on your order.

RIGHT-HAND INTERSTATER

62", 74", 88" Mount Kit Options

F.O.B. Seguin, TX

TRACTOR DESCRIPTION	MOUNT KIT	REAR OFFSET	MAXIMUM TIRE SIZE 2WD Front	4WD Front	Rear	LIST PRICE
New Holland *(Continued)*						
NH TN60DA/70DA/75DA Cab 2wd 2004-2008 (RH-Single Wing- Offset 8.75"/ Using Tractor Hydraulics)	108777 02980173	88"OR 8.5" 96"OR 12.5"	9.5L-15	N/A	16.9-30	$8,285
NH TN60DA/70DA/75DA Cab 4wd 2004-2008 (RH-Single Wing- Offset 13.78"/ Using Tractor Hydraulics)	02984334 02984335	88"OR14.5" 96"OR12.5"	N/A	11.2-20	14.9-28	$8,918
NH TN60A/70A/75A Rops 2wd 2004-2008 (RH-Single Wing- Offset 8.75")	108775 704546	88"OR 8.5" 96"OR 12.5"	11L-15	N/A	16.9-30	$8,918
NH TS90/100/110 Cab 2wd 1999-2003 (RH-Single Wing- No Offset)	108407 02983882	88"OR 8.5" 96"OR 12.5"	11L-15	N/A	16.9-30	$8,918
NH TS90/100/110 Rops 4wd w Flat Platform 1999-2003 (RH-Single Wing- No Offset)	108407 704488	88"OR 8.5" 96"OR 12.5"	N/A	12.4-24	18.4-30	$8,918
NH TS100A/110A Cab 2 & 4wd 2003-2006 (RH-Single Wing- Offset 5")	02981068 02981075	88"OR 8.5" 96" Ctr	10.00-16	12.4-24	18.4-30	$8,918
NH TS100A/110A Rops 2 & 4wd 2003-2006 (RH-Single Wing- Offset 5")	02981068 02981072	88"OR 8.5" 96" Ctr	10.00-16	12.4-24	18.4-30	$8,918
NH TS115A/125A/135A Cab 2 & 4wd 2003-2006 (RH-Single Wing- Offset 5")	02982986 02983000	88"OR 8.5" 96" Ctr	10.00-16	12.4-24	18.4-30	$8,918
NH TS115A/125A/135A Rops 2 & 4wd 2003-2006 (RH-Single Wing- Offset 5")	02981078 02983720	88"OR 8.5" 96" Ctr	10.00-16	12.4-24	18.4-30	$8,918
NH TS6.110/TS6.115/TS6.120 Cab 2 & 4wd 2012-2013 (RH Single Wing- 5" Offset Right)	TBD	96" Ctr	10.00-16	12.4-24	18.4-30	$8,918
NH TS6.125/TS6.140 Cab 2 & 4wd 2012-2013 (RH Single Wing- 5" Offset Right)	TBD	96" Ctr	10.00-16	12.4-24	18.4-30	$8,918

Note: Please list BOTH mount kit part numbers on your order.

REAR INTERSTATER

88" Flail Mower

F.O.B. Seguin, TX

STANDARD SPECIFICATIONS

- 88" Cutting Width
- 10-Gauge Unitized Cutter Housing
- 5/16" Side Plates
- CAT I or CAT II Three-Point Hitch
- 4-1/2" x 5/16" Wall Cuttershaft
- 1-5/16" Bore Greaseable, Self-aligning Cuttershaft Bearings
- Belt Drive From Gearbox to Cuttershaft with Automatic Spring Tension
- Standard (1) year limited parts and labor warranty
- 60 HP Gearbox
- 6" Adjustable Rear Roller
- 1/2" to 6" Cutting Height
- Available in Fine or Coarse-Cut
- Torque Limiter Clutch
- Front and Rear Safety Deflectors
- CAT 4 Driveline

PRODUCT ORDER CODE	DESCRIPTION	APPRX. WEIGHT		LIST PRICE
88" REAR INTERSTATER BASE UNIT *(One Choice Required)*				
SHD88CTRFC	88" SHD Center Mount (Fine Cut Knives)	1035		7,029
SHD88CTRCC	88" SHD Center Mount (Course Cut- 3oz Knives)	1035		7,029
SHD88CTRES	88" SHD Center Mount (Extreme Service- 4 oz Knives)	1035		7,270
SHD88080FC	88" SHD Offset 8.5" Right (Fine Cut Knives)	1035		7,029
SHD88080CC	88" SHD Offset 8.5" Right (Course Cut- 3oz Knives)	1035		7,029
SHD88080ES	88" SHD Offset 8.5" Right (Extreme Service- 4 oz Knives)	1035		7,270
SHD88145FC	88" SHD Offset 14.5" Right (Fine Cut Knives)	1035		7,029
SHD88145CC	88" SHD Offset 14.5" Right (Course Cut- 3oz Knives)	1035		7,029
SHD88145ES	88" SHD Offset 14.5" Right (Extreme Service- 4 oz Knives)	1035		7,270
SHD88205FC	88" SHD Offset 20.5" Right (Fine Cut Knives)	1035		7,270
SHD88205CC	88" SHD Offset 20.5" Right (Course Cut- 3oz Knives)	1035		7,029
SHD88265CC	88" SHD Offset 26.5" Right (Course Cut- 3oz Knives)	1035		7,029
SHD88265FC	88" SHD Offset 26.5" Right (Fine Cut Knives)	1035		7,029
SHD88265CC	88" SHD Offset 26.5" Right (Course Cut- 3oz Knives)	1035		7,029
SHD88265ES	88" SHD Offset 26.5" Right (Extreme Service- 4 oz Knives)	1035		7,270
SHD88CTRFCCB	88" SHD Center Mount w/ Caster Brackets (Fine Cut Knives)	1069		7,825
SHD88CTRCCCB	88" SHD Center Mount w/ Caster Brackets (Course Cut- 3oz Knives)	1069		7,825
SHD88CTRESCB	88" SHD Center Mount w/ Caster Brackets (Extreme Service- 4 oz Knives)	1069		8,066
SHD88080FCCB	88" SHD Offset 8.5" Right w/ Caster Brackets (Fine Cut Knives)	1069		7,825
SHD88080CCCB	88" SHD Offset 8.5" Right w/ Caster Brackets (Course Cut- 3oz Knives)	1069		7,825
SHD88080ESCB	88" SHD Offset 8.5" Right w/ Caster Brackets (Extreme Service- 4 oz Knives)	1069		8,066
SHD88145FCCB	88" SHD Offset 14.5" Right w/ Caster Brackets (Fine Cut Knives)	1069		7,825
SHD88145CCCB	88" SHD Offset 14.5" Right w/ Caster Brackets (Course Cut- 3oz Knives)	1069		7,825
SHD88145ESCB	88" SHD Offset 14.5" Right w/ Caster Brackets (Extreme Service- 4 oz Knives)	1069		8,066
SHD88205FCCB	88" SHD Offset 20.5" Right w/ Caster Brackets (Fine Cut Knives)	1069		7,825
SHD88205CCCB	88" SHD Offset 20.5" Right w/ Caster Brackets (Course Cut- 3oz Knives)	1069		7,825
SHD88205ESCB	88" SHD Offset 20.5" Right w/ Caster Brackets (Extreme Service- 4 oz Knives)	1069		8,066
SHD88265CCCB	88" SHD Offset 26.5" Right w/ Caster Brackets (Course Cut- 3oz Knives)	1069		7,825
SHD88265ESCB	88" SHD Offset 26.5" Right w/ Caster Brackets (Extreme Service- 4 oz Knives)	1069		8,066
OPTIONS				
803211	Additional Operators and Parts Manuals			54
701150	Lift Chains	7		100
801002	Special Mower Paint (Rear Unit Only)			585
00889899I2	Additional 12 Month Warranty (00889899)			4,014

REAR INTERSTATER

96" Flail Mower

F.O.B. Seguin, TX

STANDARD SPECIFICATIONS

- 96" Cutting Width
- 10-Gauge Unitized Cutter Housing
- 5/16" Side Plates
- CAT I or CAT II Three-Point Hitch
- 4-1/2" x 5/16" Wall Cuttershaft
- 1-5/16" Bore Greaseable, Self-aligning Cuttershaft Bearings
- Belt Drive From Gearbox to Cuttershaft with Automatic Spring Tension
- Standard (1) year limited parts and labor warranty
- 60 HP Gearbox
- 6" Adjustable Rear Roller
- 1/2" to 6" Cutting Height
- Available in Fine or Coarse-Cut
- Torque Limiter Clutch
- Front and Rear Safety Deflectors
- CAT 4 Driveline

PRODUCT ORDER CODE	DESCRIPTION	APPRX. WEIGHT		LIST PRICE
96" REAR INTERSTATER BASE UNIT *(One Choice Required)*				
SHD96CTRFC	96" SHD Center Mount (Fine Cut Knives)	1170		7,828
SHD96CTRCC	96" SHD Center Mount (Course Cut- 3 oz. knives)	1170		7,828
SHD96CTRES	96" SHD Center Mount (Extreme Service- 4 oz. knives)	1170		8,092
SHD96125FC	96" SHD Offset 12.5" Right (Fine Cut Knives)	1170		7,828
SHD96125CC	96" SHD Offset 12.5" Right (Course Cut 3 oz. knives)	1170		7,828
SHD96125ES	96" SHD Offset 12.5" Right (Extreme Service 4 oz. knives)	1170		8,092
SHD96185FC	96" SHD Offset 18.5" Right (Fine Cut Knives)	1170		7,828
SHD96185CC	96" SHD Offset 18.5" Right (Course Cut 3 oz. knives	1170		7,828
SHD96185ES	96" SHD Offset 18.5" Right (Extreme Service 4 oz. knives)	1170		8,092
SHD96245CC	96" SHD Offset 24.5" Right (Course Cut 3 oz. knives)	1170		7,828
SHD96245ES	96" SHD Offset 24.5" Right (Extreme Service 4 oz. knives)	1170		8,092
SHD96305CC	96" SHD Offset 30.5" Right (Course Cut 3 oz. knives)	1170		7,828
SHD96305ES	96" SHD Offset 30.5" Right (Extreme Service 4 oz. knives)	1170		8,092
SHD96CTRFCCB	96" SHD Center Mount w/ Caster Brackets (Fine Cut)	1249		8,356
SHD96CTRCCCB	96" SHD Center Mount w/ Caster Brackets (Course Cut 3 oz. knives)	1249		8,356
SHD96CTRESCB	96" SHD Center Mount w/ Caster Brackets (Extreme Service 4 oz. knives)	1249		8,620
SHD96185ESCB	96" SHD Offset 18.5" Right w/ Caster Brackets (Extreme Service- 4 oz. knives)	1249		8,620
SHD96245CCCB	96" SHD Offset 24.5" Right w/ Caster Brackets (Course Cut - 3 oz. knives)	1249		8,356
SHD96245ESCB	96" SHD Offset 24.5" Right w/ Caster Brackets (Extreme Service- 4 oz. knives)	1249		8,620
SHD96305CCCB	96" SHD Offset 30.5" Right w/ Caster Brackets (Course Cut- 3 oz. knives)	1249		8,356
SHD96305ESCB	96" SHD Offset 30.5" Right w/ Caster Brackets (Extreme Service- 4 oz. knives)	1249		8,620
CASTERS *(One Choice Required)*				
702193	360° Laminated Caster Wheel with Roller	154		1,616
OPTIONS				
803211	Additional Operators and Parts Manuals			54
701150	Lift Chains	7		100
801002	Special Mower Paint (Rear Unit Only)			585
00889899I2	Additional 12 Month Warranty (00889899)			4,014

VERSA MOWER

60", 72", 74" Mid-Mount Rotary/Flails

F.O.B. Seguin, TX

STANDARD SPECIFICATIONS

- Welded Steel Plate Frame Braced to the Front Bolster & Rear Axle
- 60-Gallon Hydraulic Reservoir with 12-Micron Filtration
- Lift Frame Capable of Tilting the Head 180°
- Lift Frame is Capable of Lifting the Head 17" Above & 6" Below Grade Level
- Exterior Boom Arm 5"x5"x1/4" Steel Tubing
- Stacked Hydraulic Pump Rated @ 51 GPM @ 2500 PSI
- 2-Spool, Open Center, Tapered Positive Metering Valve
- Tractor Req: 60 HP
- Cutting Capacity: 2" material

HEAD SPECIFICATIONS

- 60" Boom-Axe Head
- 1/4" Gauge Deck with 3/8" Side Skirts
- Channel Reinforcements on the Top Deck
- Spindle Mounting Plate is 1" at the Spindle
- 90 HP Gear Motor Directly Splined to the Spindle
- 4-1/2"x9" Hardened Spindle
- 1-1/4"x6" Blades, 360° Swing
- 360° Swinging Updraft Blades
- Full-Length Replaceable Skid Shoes
- Front & Rear Chain Guards
- Standard (1) year limited parts and labor warranty

PRODUCT ORDER CODE	DESCRIPTION	APPRX. WEIGHT		LIST PRICE
Versa Mower Base Unit *(One Choice Required)*				
04950004	VERSA Rotary Extreme Service Extension Arm-Rops	2,300		6,756
04950005	VERSA Rotary Extreme Service Extension Arm-Cab	2,300		6,756
04952004	VERSA Ditcher Extreme Service Extension Arm-Rops	2,300		7,395
04952005	VERSA Ditcher Extreme Service Extension Arm-Cab	2,300		7,395
04950010	VERSA Rotary Extreme Service Extension Arm-Cab-Tractor Hydraulics - Requires 2 open sets of Hydraulic Remotes	2,300		5,593
Breakaway Extension Arms Below Are Not For Use On 72" Rotary Models				
04950008	VERSA Rotary Breakaway Extension Arm-Rops	2,370		8,944
04950009	VERSA Rotary Breakaway Extension Arm-Cab	2,370		8,944
MOWER HEAD *(One Choice Required)*				
02964876	60" Rotary with Bar, Front & Rear Chain Guards	1,050		9,030
02977051	60" Rotary with Bar, Front & Rear Chain Guards (1/4" deck)	1,100		9,700
02964878	60" Rotary with Pan, Front & Rear Chain Guards	1,100		9,872
02975016	60" Rotary with Pan, Front & Rear Chain Guards (1/4" deck)	1,150		10,558
02964884	60" Breakaway Rotary with Bar, Front & Rear Chain Guards	1,050		9,724
02964886	60" Breakaway Rotary with Pan, Front & Rear Chain Guards	1,100		10,653
02964888	60" Rotary with Bar, Tail Wheel, Front & Rear Chain Guards	1,140		9,855
02964890	60" Rotary with Pan, Tail Wheel, Front & Rear Chain Guards	1,190		10,708
02967263	60" Deep Deck Rotary with Bar, Front & Rear Chain Guards (1/4" deck)	1,050		9,968
02967267	60" Deep Deck Rotary with Pan, Front & Rear Chain Guards (1/4" deck)	1,125		10,997
72" Rotary Models Below Are Not For Use On Breakaway Extension Arms				
02964880	72" Rotary with Bar, Front & Rear Chain Guards	1270		10,422
02964882	72" Rotary with Pan, Front & Rear Chain Guards	1320		11,191
02963836	60" Versa Flail, Belt Drive	740		12,963
02968968	60" Versa Flail, Belt Drive, Extreme-Duty Knife	734		12,761
02963837	74" Versa Flail, Belt Drive	840		13,280
02967639	74" Versa Flail, Belt Drive, Extreme-Duty Knife	834		13,281
02957866	Ditcher Head	600		13,219
OPTIONS *(Continued Next Page)*				
02897300	Additional Operators and Parts Manuals			54
02964900	Cable & Clamp Kit	5		35
02966070	Side Gauge Wheel Option (60" Deep-Deck VERSA Only)	75		590

VERSA MOWER

60", 72", 74" Mid-Mount Rotary/Flails

F.O.B. Seguin, TX

PRODUCT ORDER CODE	DESCRIPTION	APPRX. WEIGHT		LIST PRICE
	Options *(Continued)*			
02978378	Tilt Cylinder Kit - NH TS & 40 Series	15		766
02978383	Tilt Cylinder Kit - JD 6000,6010,6020 Series	15		483
02978391	Tilt Cylinder Kit - JD 7000, 7010 Series	15		484
02972609	Wheel Weight Kit-500 lbs.			1,266
02971789	Wheel Weight Kit-1300 lbs.			2,709
02976671	Additional 408 lbs. Kit for 1300 lbs. Wheel Weight			1,593
02976670	Additional 680 lbs. Kit for 1300 lbs. Wheel Weight			2,363
02983104	JD 5425/5525 Repl. Window (Incl. Molded Corner Window)			2,166
02982412	JD 6015 & 6020 Replacement Window Kit (Clear)			2,167
02985234	JD 7030 "Mid-Spec" Replacement Window Kit (Clear)			2,167
02982429	JD 7020 Repl. Window Kit (Tractors w/No RH Door)			2,167
02986182	JD 7030 "Prem" Window Kit (Clear) (Tractors w/No RH Door)			2,167
02983528	Case-IH JXU & NH TL-A Replacement Window Kit			2,167
02980888	Case-IH MXU & Maxxum Replacement Window Kit NH TS-A & T6000 Replacement Window Kit			2,167
02963045	Mounting Labor & Oil			5,830
02791800V6	Special Mower Paint (02791800)			821
02968967	Special Tractor Paint			5,537
00889899VM	Additional 12 Month Warranty (00889899)			4,014

VERSA MOWER

60", 72", 74" Mid-Mount Rotary/Flail Mount Kit Options

F.O.B. Seguin, TX

TRACTOR DESCRIPTION	MOUNT KIT	MAXIMUM TIRE SIZE			LIST PRICE
		2WD Front	4WD Front	Rear	
Case IH					
Case-IH Farmall 85U/95U/105U Cab/2&4wd (Fender Tank)	02986594	10.00-16	12.4-24	18.4-34	6,901
Case-IH Farmall 85U/95U/105U Cab/2&4wd (Tractor Hyd/Fender Tank)	02991132	10.00-16	12.4-24	18.4-34	6,361
Case-IH Farmall 85U/95U/105U ROPS/2&4wd (Fender Tank)	02986665	10.00-16	12.4-24	18.4-34	6,901
Case-IH JX1060C/1070C/1075C Cab/2&4wd (Fender Tank)	02983986	7.50-16	11.2-24	16.9-30	6,901
Case-IH JX1060C/1070C/1075C Cab/2&4wd (Tractor Hyd/Fender Tank)	02987283	7.50-16	11.2-24	16.9-30	6,361
Case-IH JX1060C/1070C/1075C ROPS/2wd (Mid-Mt Tank)	02977579	7.50-16	N/A	16.9-30	6,901
Case-IH JX1060C/1070C/1075C ROPS/4wd (Fender Tank)	02981057	N/A	11.2-24	16.9-30	6,901
Case-IH JX1080U/1090U/1100U Cab/2&4wd (Fender Tank)	02982265	10.00-16	12.4-24	18.4-30	6,901
Case-IH JX1080U/1090U/1100U Cab/2&4wd (Tractor Hyd/Fender Tank)	02985908	10.00-16	12.4-24	18.4-30	6,361
Case-IH JX1080U/1090U/1100U ROPS/2wd (Fender Tank)	02982253	10.00-16	N/A	18.4-30	6,901
Case-IH JX1080U/1090U/1100U ROPS/4wd (Fender Tank)	02982879	N/A	12.4-24	18.4-30	6,901
Case-IH Maxxum 110/110 Pro/120 Pro/130 Pro Cab/2wd (Fender Tank)	02989121	10.00-16	N/A	18.4-34	6,901
Case-IH Maxxum 110/110 Pro/120 Pro/130 Pro Cab/2wd (Tractor Hyd/Fender Tank)	02985615	10.00-16	N/A	18.4-34	6,361
Case-IH Maxxum 110/110 Pro/120 Pro/130 Pro Cab/4wd (Fender Tank)	02985927	N/A	12.4-24	18.4-30	6,361
Case-IH Maxxum 115/125/125 Pro/140 Pro Cab/2&4wd (Fender Tank)	02984316	10.00-16	12.4-24	18.4-34	6,901
Case-IH Maxxum 115/125/125 Pro/140 Pro Cab/2&4wd (Tractor Hyd/Fender Tank)	02990039	10.00-16	12.4-24	18.4-34	6,361
Case-IH Maxxum 115/125/125 Pro/140 Pro ROPS/2&4wd (Fender Tank)	02984870	10.00-16	12.4-24	18.4-34	6,901
Case-IH MXU100/110 Cab/2wd (Mid-Mt Tank)	02980734	10.00-16	N/A	18.4-34	6,901
Case-IH MXU100/110 Cab/2wd (Tractor Hyd/Mid-Mt Tank)	02980831	10.00-16	N/A	18.4-34	6,361
Case-IH MXU100/110 Cab/4wd (Fender Tank)	02981497	N/A	13.6-24	18.4-34	6,901
Case-IH MXU100/110 ROPS/2wd (Mid-Mt Tank)	02982461	10.00-16	N/A	18.4-34	6,901
Case-IH MXU115/125/130/135 Cab/2&4wd (Fender Tank)	02984316	10.00-16	12.4-24	18.4-34	6,901
Case-IH MXU115/125/130/135 Cab/2&4wd (Tractor Hyd/Fender Tank)	02990039	10.00-16	12.4-24	18.4-34	6,361
Case-IH MXU115/125/130/135 ROPS/2&4wd (Fender Tank)	02984870	10.00-16	12.4-24	18.4-34	6,901
Challenger					
Challenger MT445B/455B/465B Cab/2&4wd (Tier III Engine Only/Fender Tank)	02989829	10.00-16	14.9-24	18.4-34	6,901
John Deere					
JD 5065M/5075M Cab/2&4wd (Fender Tank)	02988300	7.50-16	11.2-24	16.9-30	6,901
JD 5065M/5075M Cab/2&4wd (Tractor Hyd/Fender Tank)	02988303	7.50-16	11.2-24	16.9-30	6,361
JD 5065M/5075M ROPS/2&4wd (DOOS & FOOS Platform/Fender Tank)	02990178	7.50-16	11.2-24	16.9-30	6,901
JD 5083E/5093E/5101E Limited Cab/4wd (Tapped Axles-Built Before 2011/Fender Tank)	02986435	N/A	12.4-24	18.4-30	6,901
JD 5083E/5093E/5101E Limited Cab/4wd (Tapped Axles-Built Before 2011/Loader Hyd/Fender Tank)	02986717	N/A	12.4-24	18.4-30	6,361
JD 5083E/5093E/5101E Limited Cab/4wd (Ribbed Axles-Built Before 2011/Fender Tank)	02990023	N/A	12.4-24	18.4-30	6,901
JD 5083E/5093E/5101E Limited Cab/4wd (Ribbed Axles-Built Before 2011/Tractor Hyd/Fender Tank)	02990098	N/A	12.4-24	18.4-30	6,361
JD 5083E/5093E/5101E Limited Cab/4wd (MY2011/Fender Tank)	02990965	N/A	12.4-24	18.4-30	6,901
JD 5083E/5093E/5101E Limited Cab/4wd (MY2011/Tractor Hyd/Fender Tank)	02991451	N/A	12.4-24	18.4-30	6,361
JD 5083E/5093E/5101E Limited Cab/4wd (MY2011/Loader Hyd/Fender Tank)	02991449	N/A	12.4-24	18.4-30	6,361
JD 5083E/5093E/5101E Limited Cab/4wd (MY2012/Fender Tank)	TBD	11L-15	11.2-24	16.9-30	6,901
JD 5083E/5093E/5101E Limited Cab/4wd (MY2012/Loader J-stick Control/AI Valve)	02992561	11L-15	11.2-24	16.9-30	6,901
JD 5085M/5095M/5105M Cab/2&4wd (MY2008-2011/Fender Tank)	02990965	11L-15	11.2-24	16.9-30	6,901
JD 5085M/5095M/5105M Cab 2/4wd (MY2012/Fender Tank)	02991889	11L-15	11.2-24	16.9-30	6,901
JD 5085M/5095M/5105M Cab 2/4wd (MY2012/Loader J-stick Control/AI Valve)	02991903	11L-15	11.2-24	16.9-30	6,901

OTHER SPECIFICATIONS

(1) Case-IH JX-U & Farmall U and New Holland TL-A, T4000 & T5000 series tractors require a smaller replacement battery which is not included. We recommend using Exide® #34R-84N.

VERSA MOWER

60", 72", 74" Mid-Mount Rotary/Flail Mount Kit Options

F.O.B. Seguin, TX

TRACTOR DESCRIPTION	MOUNT KIT	MAXIMUM TIRE SIZE			LIST PRICE
		2WD Front	4WD Front	Rear	
John Deere *(Continued)*					
JD 5225/5325 Cab/2&4wd (Fender Tank)	02984121	7.50-16	11.2-24	16.9-30	6,901
JD 5225/5325 ROPS/2wd (Fender Tank)	02988266	7.50-16	11.2-24	16.9-30	6,901
JD 5425/5525 Cab/2&4wd (Fender Tank)	02982838	7.50-16	11.2-24	16.9-30	6,901
JD 5425/5525/5625 Cab/2&4wd (Tractor Loader Valve Hyd/Fender Tank)	02982855	7.50-16	11.2-24	16.9-30	6,361
JD 5425/5525/5625 ROPS/2&4wd (Flat "IOOS" Platform/Fender Tank)	02982719	7.50-16	11.2-24	16.9-30	6,901
JD 5425/5525/5625 ROPS/2&4wd (Straddle Platform/Fender Tank)	02983600	7.50-16	11.2-24	16.9-30	6,901
JD 5603 Cab/4wd (Fender Tank)	02986435	N/A	12.4-24	18.4-30	6,901
JD 5603 Cab/4wd (Loader Hyd/Fender Tank)	02986717	N/A	12.4-24	18.4-30	6,361
JD 6100D/6115D/6130D/6140D Cab/2&4wd (540 PTO Pump/Fender Tank)	02988491	10.00-16	13.6-24	18.4-34	7,622
JD 6110/6210/6310/6405/6410 Cab 2wd (Fender Tank)	02973843	10.00-16	12.4-24	18.4-30	6,901
JD 6110/6210/6310/6405/6410 Cab 4wd (Fender Tank)	02973847	10.00-16	12.4-24	18.4-30	6,901
JD 6120/6220/6320/6420 (Tier II) CAB/2&4wd (Fender Tank)	02985096	10.00-16	12.4-24	18.4-30	6,901
JD 6120/6220/6320/6420 (Tier II) CAB/2wd (Tractor Hyd/Mid-Mt Tank)	02980756	10.00-16	N/A	18.4-34	6,361
JD 6120/6220/6320/6420 (Tier II) CAB/4wd (Tractor Hyd/Mid-Mt Tank)	02980768	N/A	12.4-24	18.4-34	6,361
JD 6120/6220/6320/6420 (Tier II) ROPS/2&4wd (Fender Tank)	02988531	10.00-16	12.4-24	18.4-30	6,901
JD 6120/6215/6220/6320/6415/6420 (Tier II) CAB 2wd (Frame Mounted Tank)	02978819	10.00-16	12.4-24	18.4-30	6,901
JD 6120/6215/6220/6320/6415/6420 (Tier II) Cab 4wd (Frame Mounted Tank)	02980105	10.00-16	12.4-24	18.4-30	6,901
JD 6120/6215/6220/6320/6415/6420 (Tier II) Rops 2/4wd (Frame Mounted Tank)	02979371	10.00-16	12.4-24	18.4-30	6,901
JD 6215/6415 Cab/2&4wd (Fender Tank)	02985096	10.00-16	12.4-24	18.4-30	6,901
JD 6215/6415 Cab/4wd (Tractor Hyd-2nd Remote Req'd/Mid-Mt Tank)	02980768	N/A	12.4-24	18.4-34	6,361
JD 6215/6415 Cab/4wd (Tractor Hyd-2nd Remote Req'd/Mid-Mt Tank)	02980768	N/A	12.4-24	18.4-34	6,361
JD 6230/6330/6430 "Mid-Spec" Cab/2&4wd (Tractor Hyd/Fender Tank)	02992019	10.00-16	12.4-24	18.4-34	6,901
JD 6230/6330/6430 "Mid-Spec" Cab/2&4wd (Fender Tank)	02985543	10.00-16	12.4-24	18.4-34	6,901
JD 6230/6330/6430 "Mid-Spec" Cab/2&4wd (Tractor Hyd/Fender Tank)	02992019	10.00-16	12.4-24	18.4-34	6,901
JD 6230/6330/6430 "Mid-Spec" ROPS/2&4wd (Fender Tank)	02987161	10.00-16	12.4-24	18.4-34	6,901
JD 6230/6330/6430 "Premium" Cab/2&4wd (Fender Tank)	02985543	10.00-16	12.4-24	18.4-34	6,901
JD 6230/6330/6430 "Premium" Cab/2&4wd (540 PTO Pump/Fender Tank)	02986699	10.00-16	12.4-24	18.4-34	7,622
JD 6615/6715 Cab/2wd (Mid-Mt Tank)	02982138	11.00-16	N/A	18.4-34	6,901
JD 6615/6715 Cab/4wd (Mid-Mt Tank)	02985103	N/A	13.6-28	18.4-38	6,901
JD 7220/7320/7420/7520 Cab/2wd (Mid-Mt Tank)	02982138	11.00-16	N/A	18.4-38	6,901
JD 7220/7320/7420/7520 Cab/4wd (Mid-Mt Tank)	02985103	N/A	13.6-28	18.4-38	6,901
JD 7130/7230 "Mid" Cab/2&4wd (4 or 6 cyld/55 gal. fuel tank/Fender Tank)	02988406	11.00-16	13.6-28	18.4-38	6,901
JD 7130/7230 "Mid" Cab/2&4wd w/JD673 Loader (4 or 6 cyld/55 gal. fuel tank/Fender Tank)	02991326	11.00-16	13.6-28	18.4-38	6,901
Kubota					
Kubota M96S/M108S Cab/2&4wd (Fender Tank)	02989855	10.00-16	13.6-24	18.4-34	6,901
Kubota M96S/M108S ROPS/2wd (Fender Tank)	02987422	10.00-16	N/A	18.4-34	6,901
Massey Ferguson					
MF 2670/2680 Cab/2wd (Under Fender Tank)	02991912	9.5L-15F	N/A	18.4-30	6,901
MF 5445/5455 Cab/2wd w/Std Hood (Tier II Engine Only/Fender Tank)	02985185	9.5L-15	N/A	18.4-30	6,901
MF 5460 ROPS/2wd w/Std Hood (Tier II Engine Only/Fender Tank)	02982101	10.00-16	N/A	18.4-34	6,901
New Holland					
NH T4020/4030 "Deluxe" Cab/2&4wd (Fender Tank)	02987271	9.5L-15	11.2-24	16.9-30	6,901
NH T4040/4050 "Deluxe" Cab/2&4wd (Fender Tank)	02989713	9.5L-15	11.2-24	16.9-30	6,901
NH T5040/5050/5060/5070 Cab/2&4wd (Fender Tank)	02986594	10.00-16	12.4-24	18.4-34	6,901
NH T5040/5050/5060/5070 Cab/2&4wd (Tractor Hyd/Fender Tank)	02991132	10.00-16	12.4-24	18.4-34	6,361
NH T5040/5050/5060/5070 ROPS/2&4wd (Fender Tank)	02986665	10.00-16	12.4-24	18.4-34	6,901
NH T6010/6020/6040/6060 Cab/2wd (Fender Tank)	02989121	10.00-16	N/A	18.4-34	6,901
NH T6010/6020/6040/6060 Cab/2wd (Tractor Hyd/Fender Tank)	02985615	10.00-16	N/A	18.4-34	6,361
NH T6010/6020/6040/6060 Cab/4wd (Fender Tank)	02985927	N/A	12.4-24	18.4-30	6,361
NH T6010/6020 "Delta" ROPS/2wd (Mid-Mt Tank)	02982461	10.00-16	N/A	18.4-34	6,901

OTHER SPECIFICATIONS

(1) Case-IH JX-U & Farmall U and New Holland TL-A, T4000 & T5000 series tractors require a smaller replacement battery which is not included. We recommend using Exide® #34R-84N.

VERSA MOWER

60", 72", 74" Mid-Mount Rotary/Flail Mount Kit Options

F.O.B. Seguin, TX

TRACTOR DESCRIPTION	MOUNT KIT	MAXIMUM TIRE SIZE			LIST PRICE
		2WD Front	4WD Front	Rear	
New Holland *(Continued)*					
NH T6030/6050/6070 Cab/2&4wd (Fender Tank)	02984316	10.00-16	12.4-24	18.4-34	6,901
NH T6030/6050/6070 Cab/2&4wd (Tractor Hyd/Fender Tank)	02990039	10.00-16	12.4-24	18.4-34	6,361
NH T6030/6050 ROPS/2&4wd (Fender Tank)	02984870	10.00-16	12.4-24	18.4-34	6,901
NH TB100/110 ROPS/2wd (Mid-Mt Tank)	02980759	10.00-16	N/A	18.4-30	6,901
NH TB100/110 ROPS/4wd	02986653	N/A	12.4-24	18.4-30	6,901
NH TL80/90/100 Cab/2&4wd (Fender Tank)	02980207	10.00-16	12.4-24	18.4-30	6,901
NH TL80/90/100 Cab/2&4wd (Tractor Hyd/Fender Tank)	02980910	10.00-16	12.4-24	18.4-30	6,361
NH TL80/90/100 ROPS/2wd (Mid-Mt Tank)	02979674	36x11-16 Air	N/A	20x20 Logging	6,901
NH TL80/90/100 ROPS/4wd (Fender Tank)	02980891	N/A	12.4-24	18.4-30	6,901
NH TL80/90/100 ROPS/4wd (Tractor Hyd/Fender Tank)	02980907	N/A	12.4-24	18.4-30	6,361
NH TL80A/90A/100A Cab/2&4wd (Fender Tank)	02982265	10.00-16	12.4-24	18.4-30	6,901
NH TL80A/90A/100A Cab/2&4wd (Tractor Hyd/Fender Tank)	02985908	10.00-16	12.4-24	18.4-30	6,901
NH TL80A/90A/100A ROPS/2wd (Fender Tank)	02982253	10.00-16	N/A	18.4-30	6,901
NH TL80A/90A/100A ROPS/4wd (Fender Tank)	02982879	N/A	12.4-24	18.4-30	6,901
NH TN55D/65D/70D/75D Cab/2&4wd (Fender Tank)	02983986	7.50-16	11.2-24	16.9-30	6,901
NH TN55D/65D/70D/75D Cab/2&4wd (Tractor Hyd/Fender Tank)	02987283	7.50-16	11.2-24	16.9-30	6,361
NH TN55/65/70/75 ROPS/2wd (Mid-Mt Tank)	02977579	7.50-16	N/A	16.9-30	6,901
NH TN55/65/70/75 ROPS/4wd (Fender Tank)	02981057	N/A	11.2-24	16.9-30	6,901
NH TN60DA/70DA/75DA Cab/2&4wd (Fender Tank)	02983986	7.50-16	11.2-24	16.9-30	6,901
NH TN60DA/70DA/75DA Cab/2&4wd (Tractor Hyd/Fender Tank)	02987283	7.50-16	11.2-24	16.9-30	6,361
NH TN60A/70A/75A ROPS/2wd (Mid-Mt Tank)	02977579	7.50-16	N/A	16.9-30	6,901
NH TN60A/70A/75A ROPS/4wd (Fender Tank)	02981057	N/A	11.2-24	16.9-30	6,901
NH TS100A/110A Cab/2wd (Mid-Mt Tank)	02980734	10.00-16	N/A	18.4-34	6,901
NH TS100A/110A Cab/2wd (Tractor Hyd/Mid-Mt Tank)	02980831	10.00-16	N/A	18.4-34	6,361
NH TS100A/110A Cab/4wd (Fender Tank)	02981497	N/A	13.6-24	18.4-34	6,901
NH TS100A/110A ROPS/2wd (Mid-Mt Tank)	02982461	10.00-16	N/A	18.4-34	6,901
NH TS115A/125A/130A/135A Cab/2&4wd (Fender Tank)	02984316	10.00-16	12.4-24	18.4-34	6,901
NH TS115A/125A/130A/135A Cab/2&4wd (Tractor Hyd/Fender Tank)	02990039	10.00-16	12.4-24	18.4-34	6,361
NH TS115A/125A/130A/135A ROPS/2&4wd (Fender Tank)	02984870	10.00-16	12.4-24	18.4-34	6,901
NH TS6020/6030 Rops 4/2wd	02989606	10.00-16	N/A	18.4-34	6,901

OTHER SPECIFICATIONS

(1) Case-IH JX-U & Farmall U and New Holland TL-A, T4000 & T5000 series tractors require a smaller replacement battery which is not included. We recommend using Exide® #34R-84N.

TRAXX™RF

Remote-Control Mower

CONSORTIUM CONTRACT PRICING

TRAXX™RF BASE UNIT STANDARD FEATURES

- Rubber Tracks w/Steel Cleats (Installed)
- Spike Kit w/Rubber Transport Pads (Boxed for Customer Assy.)
- Roll Guard/Frame (Installed)
- High Pressure Grease Gun Kit (Included)
- LED Strobe Light (Installed)
- Towing Kit Accessories (Included)

ORDER CODE	DESCRIPTION		LIST PRICE
	TRAXX™ RF BASE UNIT		
04774100	TRAXX™RF All-Terrain Vehicle Equipped w/ 51" Heavy Duty Head for Brush and Saplings		83,956
04774200	TRAXX™RF All-Terrain Vehicle Equipped w/ 51" Heavy Duty Head for Grass and Brush		82,856
	OPTIONS		
TR477002	Rubber Tracks (Boxed Set of 2/Customer Assy)		2,831
TR477622	Replacement Cutter Shaft For Heavy Duty Head for Brush and Saplings (Includes Replacement Bearings)		3,597
TR477623	Replacement Cutter Shaft For Heavy Duty Head for Grass and Brush (Includes Replacement Bearings)		2,497
TR477136	High Pressure Grease Gun Kit (One kit is included with Base Unit)		370
TR477147	High Wear Kit for Heavy Duty Head for Brush and Saplings		1,524
TR477143	High Wear Kit for Heavy Duty Head for Grass and Brush		1,445
TR477144	Additional Operators Manual		53
TR477145	Additional Parts Manual		53
TR477640	1 Year Extended Warranty		5,883
	REPLACEMENT CUTTER HEADS (COMPLETE)		
04773200	51" (1.3m) Heavy Duty Head for Brush and Saplings		8,450
04773100	51" (1.3m) Heavy Duty Head for Grass and Brush		7,350
	PRICING EFFECTIVE 2-15-13		

R021513

1502 East Walnut St., Seguin, TX 78155 800-882-5762 800-242-5266 fax www.alamo-industrial.com

Alamo Industrial Quick Reference Tractor Model Guide- 2013

Part #	Model Description	Compatibility	Tire Sizes	HP Rating Eng/PTO	Configuration	Consortium List Pricing
TBD-Spec1	Turn-key Tractor Spec # 1	All Series Designated for Grounds Maintenance (RFP# 070313)	9.5-24/16.9-28	45/37	Rops 4wd	26,560
TBD-Spec2	Turn-key Tractor Spec # 2	All Series Designated for Grounds Maintenance (RFP# 070313)	9.5-24/16.9-28	65/49	Cab 4wd	42,816
TBD-Spec3	Turn-key Tractor Spec # 3	All Series Designated for Grounds Maintenance (RFP# 070313)	9.5-24/16.9-28	65/49	Rops 4wd	34,376
TBD-Spec4	Turn-key Tractor Spec # 4	All Series Designated for Grounds Maintenance (RFP# 070313)	7.5-16/16.9-28	65/49	Rops 2wd	24,090
TBD-Spec5	Turn-key Tractor Spec # 5	All Series Designated for Grounds Maintenance (RFP# 070313)	11.2-24/16.9-30	84/70	Cab 4wd	67,665
TBD-Spec6	Turn-key Tractor Spec # 6	All Series Designated for Grounds Maintenance (RFP# 070313)	11.2-24/16.9-30	84/70	Rops 4wd	56,948
TBD-Spec7	Turn-key Tractor Spec # 7	Can Mount up to 23' Boom (Versa Series Only)	12.4-24/18.4-30	85/70	CAB 4wd	58,316
02991719	Turn-key Tractor Spec # 8	Can Mount up to 23' Boom (Versa Series Only)	12.4-24/18.4-30	85/70	CAB 4wd	65,447
TBD-Spec9	Turn-key Tractor Spec # 9	Can Mount up to 23' Boom (Versa Series Only)	12.4-24/18.4-30	85/70	ROPS 4wd	(9,296)
02992033	Turn-key Tractor Spec # 10	Can Mount up to 30' Boom (All Series)	14.9-24/18.4-34	105/86	CAB 4wd	87,311
TBD-Spec11	Turn-key Tractor Spec # 11	Can Mount up to 30' Boom (All Series)	400/80-R24/480-80R34	105/86	CAB 4wd	1,651
TBD-Spec12	Turn-key Tractor Spec # 12	Can Mount up to 25' Boom (All Series)	10.00-16/18.4R34	105/86	CAB 2wd	(8,151)
TBD-Spec13	Turn-key Tractor Spec # 13	Can Mount up to 30' Boom (All Series)	14.9-24/18.4-34	105/86	ROPS 4wd	(8,970)
TBD-Spec14	Turn-key Tractor Spec # 14	Can Mount up to 25' Boom (All Series)	11.00L15/18.4R34	105/86	ROPS 2wd	(17,545)

Rev 6/25/2013

Note * All Tractor Models May Take up To 180 Days to Ship From Manufacturer

Alamo Industrial Quick Reference Tractor Model Guide- 2013

Part #	Model Description	Compatibility	Tire Sizes	HP Rating Eng/PTO	Configuration	Consortium List Pricing
02992034	Turn-key Tractor Spec # 15	Can Mount up to 30' Boom (All Series)	14.9-24/18.4-34	115/95	CAB 4wd	91,447
TBD-Spec16	Turn-key Tractor Spec # 16	Can Mount up to 30' Boom (All Series)	400/80-R24/480-80R34	115/95	CAB 4wd	1,651
TBD-Spec17	Turn-key Tractor Spec # 17	Can Mount up to 25' Boom (All Series)	10.00-16/18.4R34	115/95	ROPS 2wd	(8,151)
TBD-Spec18	Turn-key Tractor Spec # 18	Can Mount up to 30' Boom (All Series)	14.9-24/18.4-34	115/95	ROPS 4wd	(8,970)
TBD-Spec19	Turn-key Tractor Spec # 19	Can Mount up to 25' Boom (All Series)	11.00L15/18.4R34	115/95	CAB 2wd	(17,545)
02992035	Turn-key Tractor Spec # 20	Can Mount up to 30' Boom (All Series)	13.6-28/18.11-38	125/102	CAB 4wd	99,460
TBD-Spec21	Turn-key Tractor Spec # 21	Can Mount up to 30' Boom (All Series)	440/80-R24/480-80R38	125/102	CAB 4wd	2,326
TBD-Spec22	Turn-key Tractor Spec # 22	Can Mount up to 25' Boom (All Series)	10.00-16/18.4R34	125/102	CAB 2wd	(8,135)
TBD-Spec23	Turn-key Tractor Spec # 23	Can Mount up to 30' Boom (All Series)	13.6-28/18.11-38	125/102	ROPS 4wd	(10,323)
TBD-Spec24	Turn-key Tractor Spec # 24	Can Mount up to 25' Boom (All Series)	11.00L15/18.4R34	125/102	ROPS 2wd	(18,883)
02991978	Turn-key Tractor Spec # 25	Can Mount up to 25' Boom (All Series)	14.9-24-18.4-34	110/90	CAB 4wd	61,266
TBD-Spec26	Turn-key Tractor Spec # 26	Can Mount up to 23' Boom (All Series)	10.00-16/18.4-34	110/90	CAB 2wd	(1,916)
TBD-Spec27	Turn-key Tractor Spec # 27	Can Mount up to 25' Boom (All Series)	14.9-24-18.4-34	110/90	ROPS 4wd	(6,887)
TBD-Spec28	Turn-key Tractor Spec # 28	Can Mount up to 25' Boom (All Series)	10.00-16/18.4-34	110/90	ROPS 2wd	(8,426)

Rev 6/25/2013

Note * All Tractor Models May Take up To 180 Days to Ship From Manufacturer

Alamo Industrial Quick Reference Tractor Model Guide- 2013

Part #	Model Description	Compatibility	Tire Sizes	HP Rating Eng/PTO	Configuration	Consortium List Pricing
TBD-Spec29	Turn-key Tractor Spec # 29	Can Mount up to 25' Boom (All Series)	14.9-24-18.4-34	118/96	CAB 4wd	62,676
TBD-Spec30	Turn-key Tractor Spec # 30	Can Mount up to 23' Boom (All Series)	10.00-16/18.4-34	118/96	CAB 2wd	(1,916)
TBD-Spec31	Turn-key Tractor Spec # 31	Can Mount up to 25' Boom (All Series)	14.9-24-18.4-34	118/96	ROPS 4wd	(6,887)
TBD-Spec32	Turn-key Tractor Spec # 32	Can Mount up to 23' Boom (All Series)	10.00-16/18.4-34	118/96	ROPS 2wd	(8,426)
02991979	Turn-key Tractor Spec # 33	Can Mount up to 30' Boom (All Series)	14.9-24-18.4-34	124/105	CAB 4wd	68,057
TBD-Spec34	Turn-key Tractor Spec # 34	Can Mount up to 25' Boom (All Series)	10.00-16/18.4-34	124/105	CAB 2wd	(3,560)
TBD-Spec35	Turn-key Tractor Spec # 35	Can Mount up to 30' Boom (All Series)	14.9-24-18.4-34	124/105	ROPS 4wd	(7,151)
TBD-Spec36	Turn-key Tractor Spec # 36	Can Mount up to 25' Boom (All Series)	10.00-16/18.4-34	124/105	ROPS 2wd	(10,709)
TBD-Spec37	Turn-key Tractor Spec # 37	Can Mount up to 25' Boom (Front Mount Series)	440/80R28 Non-Directional	125/105	CAB 4wd	124,260

Rev 6/25/2013

Note * All Tractor Models May Take up To 180 Days to Ship From Manufacturer

AXTREME2 BOOM

18', 22', 28' Articulated Models

F.O.B. Seguin, TX

STANDARD SPECIFICATIONS

- Bolt-On Undermount with Front and Rear Attached Rails
- Exclusive Slewing Ring Bearing is Featured for Boom Maneuverability
- Standard Boom Structure Made from Alloy Steel
- Main Pivot Features 2' Chrome Pins with Greaseable, Hardened Steel Bushings
- Self Contained Front Mounted Hydraulic System
- Oil-to-Air Cooler with Electric Fan
- Ability to Mow Horizontally within 6" of Rear Tire with Swivel Heads
- Boom Features Dipper and Lift
- Boom Reach Specs: **18' Models**= Up 17'-1", Out-18', Down 9'-8" **22' Mode**ls= Up-19' 7", Out-22', Down-12' 1"

25' Models= Up-22' 2", Out-25', Down-15' 6" **28' Models**= Up-24' 2", Out-27', Down-17' 6"

- 180° Horizontal Boom Swing
- Axle-Mounted Boom Rest
- Mount Kit, all Wheel Weight, and Polycarbonate Window Included in Base Price
- Tractor Req: Min of 8,500 lbs and 90 HP. Min 90" Wheelbase and 18" Ground Clearance

HEAD SPECIFICATIONS

- 58" Cutting Diameter
- Alloy Deck Material with Double Wall Side Skirt
- 4-1/2"x9" Heat-Treated Alloy Spindle
- 152 HP Motor Direct-Coupled
- 2-1/2" x 5" Stacked Three-Leaf Blade Bar, Alloy Steel
- 5/8" x 5" High-Carbon Alloy Steel Blade, 360° Swing
- Standard (1) year limited parts and labor warranty.

PRODUCT ORDER CODE	DESCRIPTION	APPRX. WEIGHT		LIST PRICE
Boom Base Unit *(One Choice Required)*				
04831820	18' Axtreme II Boom (Joystick Control)	5,000		44,252
04831821	18' Axtreme II Boom (Cable Control)	4,800		37,107
04832220	22' Axtreme II Boom (Joystick Control)	5,200		45,509
04832221	22' Axtreme II Boom (Cable Control)	5,000		38,962
04832520	25' Axtreme II Boom (Joystick Control)	5,700		47,740
04832521	25' Axtreme II Boom (Cable Control)	5,500		41,192
04832628	28' Axtreme II Boom (Joystick Control)			52,440
04832528	28' Axtreme II Boom (Cable Control)			45,705
Mower Head *(One Choice Required)*				
02986190AJ	60" Rotary w/Ctr Hyd Door, Blade Bar & Head Swivel (Joystick Control)	1115		14,690
02986190AC	60" Rotary w/Ctr Hyd Door, Blade Bar & Head Swivel (Cable Control)	1115		14,690
02986203	60" Rotary w/Ctr Hyd Door, Blade Bar (No Head Swivel)	1061		12,664
02986213AJ	50" Rotary w/Ctr Hyd Door, Blade Bar & Head Swivel (Joystick Control)			13,992
02986213AC	50" Rotary w/Ctr Hyd Door, Blade Bar & Head Swivel (Cable Control)			13,992
02986211	50" Rotary w/Ctr Hyd Door, Blade Bar (No Head Swivel)			11,966
02986212AJ	50" Rotary w/Ctr Hyd Door, Blade Pan & Head Swivel (Joystick Control)			13,169
02986212AC	50" Rotary w/Ctr Hyd Door, Blade Pan & Head Swivel (Cable Control)			13,169
02986210	50" Rotary w/Ctr Hyd Door, Blade Pan (No Head Swivel)			11,143
02986251AJ	48" Flail-Axe w/Head Swivel (Joystick Control)			14,541
02986251AC	48" Flail-Axe w/Head Swivel (Cable Control)			14,541
02986253	48" Flail-Axe (No Head Swivel)	777		12,515

AXTREME2 BOOM

18', 22', 28' Articulated Models

F.O.B. Seguin, TX

PRODUCT ORDER CODE	DESCRIPTION	APPRX. WEIGHT		LIST PRICE
Mower Head *(One Choice Required)*				
02986252AJ	48" Flail-Axe, SHD Cuttershaft (3 oz Knives) w/Head Swivel (Joystick Control)			15,731
02986252AC	48" Flail-Axe, SHD Cuttershaft (3 oz Knives) w/Head Swivel (Cable Control)			15,731
02986252AJ	48" Flail-Axe, SHD Cuttershaft (3 oz Knives) w/Head Swivel (Joystick Control)			15,731
02986252AC	48" Flail-Axe, SHD Cuttershaft (3 oz Knives) w/Head Swivel (Cable Control)			15,731
02988228	48" Grass Flail, SHD Cuttershaft			13,704
02988229	60" Grass Flail, SHD Cuttershaft	800		13,813
02988233	Bomford 60" HD Grass Flail (Non-Swivel)			12,640
02988881	Bomford 60" HD Grass Flail (Swivel)- Requires Swivel Wiring Kit			14,395
02988255	5' Timber Cat Sickle Bar	682		13,127
02988256	7' Timber Cat Sickle Bar	770		13,944
02986235	90" Buzzbar (4 Blade)	1098		15,598
02986229	69" Buzzbar (3 Blade)	705		13,845
02986219	48" Buzzbar (2 Blade)	550		11,099
02988854	Ditcher Head (Hitch Post Mounted)			12,869
Options				
02988075A	Additional Operators and Parts Manuals			54
02989326	Quick Hitch Kit*			3,948
02989327	Hydraulic Kit for Quick Hitch Head**			523
02975647	Flail-Axe Jack Stand Kit***			342
02984479	Flail-Axe Swivel Hitch Post Conversion Kit			4,914
02984049	JD 6215/6415/6020/6030 Frt Axle Stabilizer Kit (4wd Only)			1,128
02984226	JD 6615/6715 Frt Axle Stabilizer Kit (4wd Only)			1,128
02985058	MF 5460 Frt Axle Stabilizer Kit (4wd Only)			1,128
02984671	MF 5465 Frt Axle Stabilizer Kit (4wd Only)			1,128
02984048	NH TS-A Frt Axle Stabilizer Kit (4wd Only)			1,128
02984877	NH TS-A Joystick Mount for Deluxe Seat			97
02985484	NH T6000 Series Frt Axle Stabilizer Kit (4wd Only)			1,128
02985029	Mounting Labor & Oil			6,259
02791800	Special Mower Paint			1,243
02968967	Special Tractor Paint			5,537
00889899A	Additional 12 Month Warranty (00889899)			4,014

** Includes all components to convert boom and (1) head to Quick Hitch*
*** Required to convert additional heads to Quick Hitch*
**** Required to level Flail-Axe for Quick Hitch*

AXTREME2 BOOM

18' Mount Kit Options

F.O.B. Seguin, TX

TRACTOR DESCRIPTION	MOUNT KIT	MAXIMUM TIRE SIZE		
		2WD Front	4WD Front	Rear
Case IH				
Case-IH MXU100/110 Cab 2/4wd (Joystick)	02987221	11.00-16	14.9-24	18.4-34
Case-IH MXU100/110 Cab 2/4wd (Cable)	02987224	11.00-16	14.9-24	18.4-34
Case-IH Maxxum 115/125/125 Pro/140 Pro Cab/2&4wd (Joystick) 2010-2012	02991283	11.00-16	14.9-24	18.4-34
Case-IH Maxxum 115/125/125 Pro/140 Pro Cab/2&4wd (Cable) 2010-2012	02991282	11.00-16	14.9-24	18.4-34
Case-IH Maxxum 115/125/125 Pro/140 Pro Cab/2&4wd (Joystick) 2007-2010	02987104	11.00-16	14.9-24	18.4-34
Case-IH Maxxum 115/125/125 Pro/140 Pro Cab/2&4wd (Cable) 2007-2010	02987100	11.00-16	14.9-24	18.4-34
John Deere				
JD 6215/6415 Cab/2&4wd (Joystick)	02990347	10.00-16	13.6-24	18.4-34
JD 6120/6220/6320/6420 Cab/2&4wd (Joystick)	02990347	10.00-16	13.6-24	18.4-34
JD 6230/6330/6430 "Mid-Spec" Cab/2&4wd (Joystick)	02991525	10.00-16	13.6-24	18.4-34
JD 6230/6330/6430 "Mid-Spec" Cab/2&4wd (Cable)	02987062	10.00-16	13.6-24	18.4-34
JD 6230/6330/6430 "Premium" Cab/2&4wd (Joystick)	02987066	10.00-16	13.6-24	18.4-34
JD 6230/6330/6430 "Premium" Cab/2&4wd (Cable)	02987062	10.00-16	13.6-24	18.4-34
JD 6615/6715 Cab/2&4wd (Joystick)	02991685	10.00-16	13.6-24	18.4-34
JD 7220/7320 Cab/2&4wd (Joystick/34" Flanged Rear Whl)	02987200	11.00-16	13.6-28	18.4-34
JD 7220/7320 Cab/2&4wd (Joystick/38" Flanged Rear Whl)	02987202	11.00-16	14.9-28	18.4-38
JD 7130/7230 "Mid-Spec" Cab/2&4wd (4 or 6 Cyld / 55 gal. Fuel Tank / Joystick)	02990424	11.00-16	13.6-28	18.4-38
Massey Ferguson				
MF 5460 Cab/2&4wd (Joystick)	02987204	11.00-16	14.9-24	18.4-34
MF 5460 Cab/2&4wd (Cable)	02987207	11.00-16	14.9-24	18.4-34
MF 5465 Cab/2&4wd (Tier II Engine Only / Joystick)	02987213	11.00-16	14.9-24	18.4-34
New Holland				
NH TS100A/110A Cab/2&4wd (Joystick)	02987221	11.00-16	14.9-24	18.4-34
NH TS100A/110A Cab/2&4wd (Cable)	02987224	11.00-16	14.9-24	18.4-34
NH T6030/6050/6070 Cab/4wd (Built Before May 2010 / Joystick)	02987104	11.00-16	14.9-24	18.4-34
NH T6030/6050/6070 Cab/4wd (Built Before May 2010 / Cable)	02987100	11.00-16	14.9-24	18.4-34
NH T6030/6050/6070 Cab/4wd (Built After May 2010 / Joystick)	02991283	11.00-16	14.9-24	18.4-34
NH T6030/6050/6070 Cab/4wd (Built After May 2010 / Cable)	02991282	11.00-16	14.9-24	18.4-34

OTHER SPECIFICATIONS

(1) Always use the maximum tire size for favorable ground clearance.
(2) Tractors should not be ordered with armrest-integrated controls.
(3) Tractors must be equipped with flanged rear rims unless otherwise noted.
(4) Right handrail removal may be necessary for boom transport clearance.
(5) John Deere tractors must include a standard through-hood exhaust.
(6) Case-New Holland mount kits include an exhaust relocation feature.

AXTREME2 BOOM

22', 25' Mount Kit Options

F.O.B. Seguin, TX

Note: 25" Axteme units are to be mounted on 4WD model tractors only

TRACTOR DESCRIPTION	MOUNT KIT	MAXIMUM TIRE SIZE		
		2WD Front	4WD Front	Rear
Case IH				
Case-IH MXU100/110 Cab/2&4wd (Joystick)	02987226	11.00-16	14.9-24	18.4-34
Case-IH MXU100/110 Cab/2&4wd (Cable)	02987227	11.00-16	14.9-24	18.4-34
Case-IH MXU115/125/130/135 Cab/2&4wd (Joystick)	02987232	11.00-16	14.9-24	18.4-34
Case-IH MXU115/125/130/135 Cab/2&4wd (Cable)	02987235	11.00-16	14.9-24	18.4-34
Case-IH Maxxum 110/110 Pro/120 Pro/130 Pro Cab 2/4wd (Joystick) 2010-2012	02991281	11.00-16	14.9-24	18.4-34
Case-IH Maxxum 110/110 Pro/120 Pro/130 Pro Cab 2/4wd (Cable) 2010-2012	02991280	11.00-16	14.9-24	18.4-34
Case-IH Maxxum 110/110 Pro/120 Pro/130 Pro Cab/2&4wd (Joystick)	02987094	11.00-16	14.9-24	18.4-34
Case-IH Maxxum 110/110 Pro/120 Pro/130 Pro Cab/2&4wd (Cable)	02987098	11.00-16	14.9-24	18.4-34
Case-IH Maxxum 115/125/125 Pro/140 Pro Cab/2&4wd (Joystick)	02987107	11.00-16	14.9-24	18.4-34
Case-IH Maxxum 115/125/125 Pro/140 Pro Cab/4wd w/Repl. Fuel Tank (Joystick)	02990277	N/A	14.9-28	18.4-38
Case-IH Maxxum 115/125/125 Pro/140 Pro Cab/2&4wd (Cable)	02987106	11.00-16	14.9-24	18.4-34
Challenger				
Challenger MT445B/455B/465B Cab/2&4wd (Tier III Engine Only)	02990890	11.00-16	14.9-24	18.4-34
John Deere				
JD 6230/6330/6430 "Mid-Spec" Cab/2&4wd (Joystick)	02987070	10.00-16	13.6-24	18.4-34
JD 6230/6330/6430 "Mid-Spec" Cab/2&4wd (Cable)	02987069	10.00-16	13.6-24	18.4-34
JD 6230/6330/6430 "Premium" Cab/2&4wd (Joystick)	02987068	10.00-16	13.6-24	18.4-34
JD 6230/6330/6430 "Premium" Cab/2&4wd (Cable)	02987069	10.00-16	13.6-24	18.4-34
JD 6615/6715 Cab/2&4wd (Joystick)	02987195	11.00-16	13.6-24	18.4-34
JD 6615/6715 Cab/2&4wd (Cable)	02987198	11.00-16	13.6-24	18.4-34
JD 7220/7320 Cab/2&4wd (Joystick/38" Rack & Pinion Axle)	02991349	11.00-16	13.6-28	18.4-34
JD 7220/7320 Cab/2&4wd (Cable/38" Rack & Pinion Axle)	02990131	11.00-16	13.6-28	18.4-34
JD 7130/7230 "Mid-Spec" Cab/2&4wd (4 or 6 Cyld / 55 gal. Fuel Tank / Joystick)	02987072	11.00-16	13.6-28	18.4-38
JD 7130/7230 "Premium" Cab/2&4wd (6 Cyld / 55 gal. Fuel Tank / Flanged Rear Whl / Built Before Nov. 1, 2010 / Joystick)	02987076	11.00-16	14.9-28	18.4-38
Massey Ferguson				
MF 5460 Cab/2&4wd (Joystick)	02987211	11.00-16	14.9-24	18.4-34
MF 5460 Cab/2&4wd (Cable)	02987210	11.00-16	14.9-24	18.4-34
MF 5465 Cab/2&4wd (Tier II Engine Only / Joystick)	02987215	11.00-16	14.9-24	18.4-34
New Holland				
NH 5610S/6610S ROPS/2&4wd (Cable)	02989073	10.00-16	14.9-24	18.4-34
NH TS100A/110A Cab/2&4wd (Joystick)	02987226	11.00-16	14.9-24	18.4-34
NH TS100A/110A Cab/2&4wd (Cable)	02987227	11.00-16	14.9-24	18.4-34
NH TS115A/125A/130A/135A Cab/2&4wd (Joystick)	02987232	11.00-16	14.9-24	18.4-34
NH TS115A/125A/130A/135A Cab/2&4wd (Cable)	02987235	11.00-16	14.9-24	18.4-34
NH T6010/6020/6040/6060 Cab/2&4wd (Built Before May 2010 / Joystick)	02987094	11.00-16	14.9-24	18.4-34
NH T6010/6020/6040/6060 Cab/2&4wd (Built Before May 2010 / Cable)	02987098	11.00-16	14.9-24	18.4-34
NH T6010/6020/6040/6060 Cab/2&4wd (Built After May 2010 / Joystick)	02991281	11.00-16	14.9-24	18.4-34
NH T6010/6020/6040/6060 Cab/2&4wd (Built After May 2010 / Cable)	02991280	11.00-16	14.9-24	18.4-34
NH T6030/6050/6070 Cab/2&4wd (Built Before May 2010 / Joystick)	02987107	11.00-16	14.9-24	18.4-34
NH T6030/6050/6070 Cab/2&4wd (Built Before May 2010 / Cable)	02987106	11.00-16	14.9-24	18.4-34
NH T6030/6050/6070 Cab/4wd w/Repl. Fuel Tank (Built Before May 2010 / Joystick)	02990277	N/A	14.9-28	18.4-38
NH T6030/6050/6070 Cab/2&4wd (Built After May 2010 / Joystick)	02991285	11.00-16	14.9-24	18.4-34
NH T6030/6050/6070 Cab/2&4wd (Built After May 2010 / Cable)	02991284	11.00-16	14.9-24	18.4-34
NH T6030/6050/6070 Cab/4wd w/Repl. Fuel Tank (Built After May 2010 / Joystick)	02991286	N/A	14.9-28	18.4-38
NH TS6020/6030 ROPS/2&4wd (Joystick)	02990973	10.00-16	14.9-24	18.4-34

OTHER SPECIFICATIONS

(1) Always use the maximum tire size for favorable ground clearance.
(2) Tractors should not be ordered with armrest-integrated controls.
(3) Tractors must be equipped with flanged rear rims unless otherwise noted.
(4) Right handrail removal may be necessary for boom transport clearance.
(5) John Deere tractors must include a standard through-hood exhaust.
(6) Case-New Holland mount kits include an exhaust relocation feature.

AXTREME2 BOOM

28' Mount Kit Options

F.O.B. Seguin, TX

Note: 28' Axteme units are to be mounted on 4WD model tractors only

TRACTOR DESCRIPTION	MOUNT KIT	MAXIMUM TIRE SIZE		
		2WD Front	4WD Front	Rear
Case IH				
Case-IH MXU100/110 Cab/4wd (Joystick)	02986063	N/A	14.9-24	18.4-34
Case-IH MXU100/110 Cab/4wd (Cable)	02986072	N/A	14.9-24	18.4-34
Case-IH MXU115/125/130/135 Cab/4wd (Joystick)	02986317	N/A	14.9-24	18.4-34
Case-IH MXU115/125/130/135 Cab/4wd (Cable)	02989085	N/A	14.9-24	18.4-34
Case-IH Maxxum 110/110 Pro/120 Pro/130 Pro ROPS/4wd (Cable)	02990450	N/A	14.9-24	18.4-34
Case-IH Maxxum 115/125/125 Pro/140 Pro Cab/4wd (Cable)	02990392	N/A	14.9-24	18.4-34
Case-IH Maxxum 115/125/125 Pro/140 Pro Cab/4wd w/Repl. Fuel Tank (Cable)	02990473	N/A	14.9-28	18.4-38
Case-IH Maxxum 115/125/125 Pro/140 Pro ROPS/4wd (Cable)	02989480	N/A	14.9-24	18.4-34
John Deere				
JD 6230/6330/6430 "Mid-Spec" Cab/2&4wd (Joystick)	02989733	N/A	13.6-24	18.4-34
JD 6230/6330/6430 "Mid-Spec" Cab/2&4wd (Cable)	02990112	N/A	13.6-24	18.4-34
JD 7130 "Mid-Spec" Cab/4wd (4 Cyl)- Cable Control	02991631	N/A	13.6-28	18.4-38
JD 7220/7320 Cab/2&4 (Joystick/34" Flanged Rear Whl)	02989265	N/A	13.6-28	18.4-34
JD 7220/7320 Cab/2&4 (Cable w/34" Flanged Rear Whl)	02989263	N/A	13.6-28	18.4-34
JD 7130/7230 "Mid-Spec" Cab/4wd (6 Cyld / 55 gal. Fuel Tank / Joystick)	02988263	N/A	13.6-28	18.4-38
JD 7130/7230 "Prem" Cab/4wd (6 Cyld / 55 gal. Fuel Tank / Flanged Rear Whl / Built Before Nov. 1, 2010 / Joystick)	02986776	N/A	14.9-28	18.4-38
JD 7130/7230 "Prem" Cab/4wd (6 Cyld / 55 gal. Fuel Tank / Flanged Rear Whl / Built Before Nov. 1, 2010 / Cable)	02986773	N/A	14.9-28	18.4-38
Massey Ferguson				
MF 5465/5475 Cab/4wd (Tier III Perkins Engine Only / Cable)	02990214	N/A	14.9-28	18.4-38
New Holland				
NH TS100A/110A Cab/4wd (Joystick)	02986063	N/A	14.9-24	18.4-34
NH TS100A/110A Cab/4wd (Cable)	02986072	N/A	14.9-24	18.4-34
NH TS115A/125A/130A/135A Cab/4wd (Joystick)	02986317	N/A	14.9-24	18.4-34
NH TS115A/125A/130A/135A Cab/4wd (Cable)	02989085	N/A	14.9-24	18.4-34
NH T6010/6020 "Delta" ROPS/4wd (Cable)	02990450	N/A	14.9-24	18.4-34
NH T6030/6050/6070 Cab/4wd (Built Before May 2010 / Cable)	02990392	N/A	14.9-24	18.4-34
NH T6030/6050/6070 Cab/4wd w/Repl. Fuel Tank (Built Before May 2010 / Cable)	02990473	N/A	14.9-28	18.4-38
NH T6030/6050/6070 Cab/4wd w/Repl. Fuel Tank (Built After May 2010 / Joystick)	02991351	N/A	14.9-28	18.4-38
NH T6030/6050/6070 Cab/4wd w/Repl. Fuel Tank (Built After May 2010 / Cable)	02991287	N/A	14.9-28	18.4-38
NH T6030/6050 ROPS/4wd (Cable)	02989480	N/A	14.9-24	18.4-34
NH TS6020/6030 ROPS/4wd (Cable)	02990478	N/A	14.9-24	18.4-34

OTHER SPECIFICATIONS

(1) Always use the maximum tire size for favorable ground clearance.
(2) Tractors should not be ordered with armrest-integrated controls.
(3) Tractors must be equipped with flanged rear rims unless otherwise noted.
(4) Right handrail removal may be necessary for boom transport clearance.
(5) John Deere tractors must include a standard through-hood exhaust.
(6) Case-New Holland mount kits include an exhaust relocation feature.

MACHETE2 BOOM

18', 22', 25' Articulated Models

F.O.B. Seguin, TX

STANDARD SPECIFICATIONS

- 4" X 4" Square Tubular Frame
- Features a 2 1/2" greaseable "king post" style turning arm.
- Main pivots points utilize 2' pins with greaseable, hardened steel bushings.
- Self contained hydraulic system.
- 20 gal Front-Mounted Reservoir/35 gal Total System Volume
- Motor Circuit: Piston Pump Rated @ 25 gpm (43.8 hp) & 3,000 psi @ 2,200 rpm.
  Charge Pump Rated @ 8 gpm (1.4 hp) & 300 psi @ 2,200 rpm.
- Control Circuit: Piston Pump Rated @ 18 gpm (31.5 hp) & 3,000 psi @ 2,200 rpm.
- Inner Boom Arm 6"x6"x1/4" Alloy Steel Tubing
- Outer Boom Arm 5"x5"x1/4" Alloy Steel Tubing
- 120° Horizontal Boom Swing
- Boom Reach: Up-18' 7", Out-18', Down-5' 1".
- Mount Kit, Wheel Weight, and Polycarbonate Window Included in Base Price
- Tractor Req: Min of 8,500 lbs and 90 eng. hp. Min 90" Wheelbase and 18" Ground Clearance

HEAD SPECIFICATIONS

- 58" Cutting Diameter
- Alloy Deck Material with Double Wall Side Skirt
- 4-1/2"x9" Heat-Treated Alloy Spindle
- 205 HP Direct-Coupled Piston Motor
- Stacked Three-Leaf, Alloy Steel Blade Bar
- 5/8" x 5" Double -Edged, Tempered Steel Blades, 360° Swing
- Standard (1) year limited parts and labor warranty.

PRODUCT ORDER CODE	DESCRIPTION	APPRX. WEIGHT		LIST PRICE
	Base Unit *(One Choice Required)*			
04861801	18' Machete II Boom- 4wd (Joystick Control)			39,827
04861800	18' Machete II Boom- 2wd (Joystick Control)			39,827
04862201	22' Machete II Boom- 4wd (Joystick Control)			40,958
04862200	22' Machete II Boom- 2wd (Joystick Control)			40,958
04862501	25' Machete II Boom- 4wd (Joystick Control)			42,966
04862500	25' Machete II Boom- 2wd (Joystick Control)			42,966
	MOWER HEAD *(One Choice Required)*			
02986191	60" Rotary w/Ctr Hyd Door, Blade Bar & Head Swivel	1,080		16,463
02986205	60" Rotary w/Ctr Hyd Door, Blade Bar (No Head Swivel)	1,026		15,118
02986197	50" Rotary w/Ctr Hyd Door, Blade Bar & Head Swivel			16,117
02986704	50" Rotary w/Ctr Hyd Door, Blade Bar (No Head Swivel)			14,292
02986198	50" Rotary w/Ctr Hyd Door, Blade Pan & Head Swivel			15,295
02986703	50" Rotary w/Ctr Hyd Door, Blade Pan (No Head Swivel)			13,470
02986262	48" Flail-Axe w/Head Swivel			15,539
02986254	48" Flail-Axe (No Head Swivel)			13,715
02989697	48" Flail-Axe, SHD Cuttershaft (4 oz Knives, No Head Swivel)			15,086
02986263	60" HD Grass Flail w/Head Swivel			16,218
02988186	60" HD Grass Flail (No Head Swivel)	870		14,394
02988159	5' Timber Cat Sickle Bar	682		11,688
02988158	7' Timber Cat Sickle Bar	770		12,695
02986245	90" Buzzbar (4 Blade)	1098		14,586
02986237	69" Buzzbar (3 Blade)	705		13,776
02986236	48" Buzzbar (2 Blade)	550		11,046
02988100	Ditcher Head (Hitch Post Mounted)			12,807

MACHETE2 BOOM

18', 22', 25' Articulated Models

F.O.B. Seguin, TX

PRODUCT ORDER CODE	DESCRIPTION	APPRX. WEIGHT		LIST PRICE
	OPTIONS			
02986941A	Additional Operators and Parts Manuals			54
02989463	Quick Hitch Kit*			3,553
02989464	Hydraulic Kit for Quick Hitch Head**			471
02975647M	Flail-Axe Jack Stand Kit*** (02975647)			307
02984400	HD Grass Flail Jack Stand Kit***			301
02982002	Mounting Labor & Oil			6,603
02791800	Special Mower Paint			1,243
02968967	Special Tractor Paint			5,537
00889899MC	Additional 12 Month Warranty (00889899)			4,014

** Includes all components to convert boom and (1) head to Quick Hitch*
*** Required to convert additional heads to Quick Hitch*
**** Required to level Flail Heads for Quick Hitch*

MACHETE2 BOOM

18', 22' 25' Mount Kit Options

F.O.B. Seguin, TX

Note: 25" Machete units are to be mounted on 4WD model tractors only

TRACTOR DESCRIPTION	MOUNT KIT	MAXIMUM TIRE SIZE		
		2WD Front	4WD Front	Rear
Case IH				
Case-IH Maxxum 110/110 Pro/120 Pro/130 Pro Cab/4wd	02987861	N/A	14.9-24	18.4-34
Case-IH Maxxum 115/125/125 Pro/140 Pro Cab/2wd	02988161	11.00-16	N/A	18.4-34
Case-IH Maxxum 115/125/125 Pro/140 Pro Cab/4wd	02988204	N/A	14.9-24	18.4-34
Case-IH Puma 165/180/195/210 Cab/4wd (Frt Axle Stabilizer Not Incl.)	02990699	N/A	16.9R30	20.8R42
Challenger				
Challenger MT445B/455B/465B Cab/4wd (Tier III Engine Only)	02989771	N/A	14.9-24	18.4-34
Challenger MT475B Cab/4wd (Tier III)	02989824	N/A	14.9-28	18.4-38
John Deere				
JD 6110/6210/6310/6405/6410 ROPS/4wd	02989188	N/A	12.4-24	18.4-30
JD 6110/6210/6310/6405/6410 Cab/2&4wd (Frt Axle Stabilizer Not Incl.)	02990683	10.00-16	12.4-24	18.4-30
JD 6215/6415 Cab/2wd	02990190	10.00-16	N/A	18.4-30
JD 6220/6320/6420 (Tier II) Cab/2wd	02990190	10.00-16	N/A	18.4-30
JD 6230/6330/6430 "Mid-Spec" Cab/2wd	02988521	10.00-16	N/A	18.4-34
JD 6230/6330/6430 "Mid-Spec" Cab/4wd	02987774	N/A	13.6-24	18.4-34
JD 6230/6330/6430 "Premium" Cab/4wd	02987901	N/A	13.6-24	18.4-34
JD 7130/7230 "Mid-Spec" Cab/2wd (Frt Axle Stabilizer Not Incl.)	02989869	11.00-16		18.4-38
JD 7130/7230 "Mid-Spec" Cab/4wd	02987751	N/A	13.6-28	18.4-38
JD 7130/7230 "Prem" Cab/4wd (6 cyld / 55 gal. fuel tank / Flanged Rear Whl / Built Before Nov. 1, 2010)	02989132	N/A	14.9-28	18.4-38
JD 7130/7230/7330 "Prem" Cab/4wd (4 & 6 cyld / 66 gal. fuel tank / Rack & Pinion Rear Whl / Built After Nov. 1, 2010)	02991260		14.9-28	18.4-38
JD 7410 "Mid-Spec" Cab/2wd	02991666	11.00-16	N/A	18.4-38
Massey Ferguson				
MF 5465/5475 Cab/4wd (Tier III Perkins Engine Only)	02988043	N/A	14.9-24	18.4-34
McCormick				
McCormick MC105 Cab/4wd	02991916	N/A	14.9-24	18.4-34
New Holland				
NH TS100 Cab/4wd	02990453	N/A	14.9-24	18.4-34
NH TS100 Cab/2wd (Frt Axle Stabilizer Not Incl.)	02988372	10.00-16	N/A	18.4-30
NH T6020/6040/6060 Cab/4wd (Built Before May 2010)	02987861	N/A	14.9-24	18.4-34
NH T6020/6040/6060 Cab/4wd (Built After May 2010)	02991288	N/A	14.9-24	18.4-34
NH T6030/6050/6070/6080 Cab/2wd (Built Before May 2010)	02988161	11.00-16	N/A	18.4-34
NH T6030/6050/6070/6080 Cab/2wd (Built After May 2010)	02991289	11.00-16	N/A	18.4-34
NH T6030/6050/6070/6080 Cab/4wd (Built Before May 2010)	02988204	N/A	14.9-24	18.4-34
NH T6030/6050/6070/6080 Cab/4wd (Built After May 2010)	02991290	N/A	14.9-24	18.4-34
NH TS6.110/TS6.115/TS6.120 2012-2013 Cab/4wd (Joystick Control)	TBD	N/A	14.9-24	18.4-34
NH TS6.125/TS6.140 2012-2013 Cab/4wd (Joystick Control)	02992506	N/A	14.9-24	18.4-34

OTHER SPECIFICATIONS

(1) Always use the maximum tire size for favorable ground clearance.
(2) Tractors should not be ordered with armrest-integrated controls.
(3) Tractors must be equipped with flanged rear rims unless otherwise noted.
(4) Right handrail removal may be necessary for boom transport clearance.
(5) John Deere tractors must include a standard through-hood exhaust.
(6) John Deere 7030 series fuel tanks must not exceed 66 gal.
(7) Case-New Holland mount kits include an exhaust relocation feature.

MACHETE FRONT-MOUNT BOOM

21' & 24' Articulated Models

F.O.B. Seguin, TX

STANDARD SPECIFICATIONS

- Mounting Rail Frame is Full-Length, 4"x 4"x 5/16" Steel Tubing
- 4"x 4"x 5/16" Steel Tube Mainframe with 4"x 6" x 3/16" Main Structure
- 22-Gallon Hydraulic Reservoir Tank is Mounted Within the Interior of the Frame
- Hydraulic Oil Filter is a 10 Micron Fulter with an ISO Cleanliness Code of 18/13 and a Full Flow of 35 GMP
- Inner Boom Arm 6"x 6" x 1/4" Steel Tubing
- Outer Boom Arm 5"x 5"x 1/4" Steel Tubing
- 125° Boom Swing
- Boom Reach- 21' Machete With 60" Rotary Up-21'7", Out-21'3", Down-12'10"
- Boom Reach- 24' Machete With 60" Rotary Up-24'4", Out-24', Down-15'7"
- Complete Construction of T1 Steel Available
- Piston Pump Rated @ 46 GPM @ 3600 RPM and 5000 PSI
- Front Pump is Idle During Transportation
- The Pump Assembly is Driven by the PTO Shaft
- Single Electronic Controls Five Functions
- Low Shock Start Up and Six Second Shutdown
- Boom Rest is Mounted to the Mower Frame
- Standard (1) year limited parts and labor warranty.

PRODUCT ORDER CODE	DESCRIPTION	APPRX. WEIGHT		LIST PRICE
21' & 24' MACHETE BOOM FRONT-MOUNT FOR TV140 BASE UNITS *(One Choice Required)*				
04210010	21' Machete Boom Front-Mount for NH TV140	6,200		38,198
04240010	24' Machete Boom Front-Mount for NH TV140	6,300		40,572
04210011	21' Machete Boom Front-Mount, T1 Steel, for NH TV140	6,300		40,047
04240011	24' Machete Boom Front-Mount, T1 Steel, for NH TV140	6,400		42,587
MOWER HEAD *(One Choice Required)*				
02968858	Rotary, 60" Machete (Blade Bar)	919		15,118
02970300	Flail, 48" Flail-Axe Piston Brush Cutter	770		13,714
02972460	Flail, 60" Grass Cutter	870		14,394
02972149	5' Timber Cat Sickle Bar	440		11,688
02972150	7' Timber Cat Sickle Bar	520		12,695
02973313	Ditcher-Forward Rotation Only	600		12,807
02974203	90" (4 Blade) BuzzBar Tree Cutter	1,098		16,387
02979249	69" (3 Blade) BuzzBar Tree Cutter	705		13,776
02979265	48" (2 Blade) Buzzbar Tree Cutter	550		11,046
OPTIONS				
02968915	Additional Operators and Parts Manuals			54
02975614	Quick Hitch Kit*			3,851
02975615	Hydraulic Kit for Quick Hitch Head**			511
02975647M	Flail-Axe Jack Stand Kit*** (02975647)			307
02973181	Accumulator Kit - Machete	10		1,581
02979478	Mounting Labor & Oil			6,344
02791800	Special Mower Paint			1,243
00889899MF	Additional 12 Month Warranty (00889899)			4,014

Note: Tractor must include factory installed loader mounting brackets.

** Includes all components to convert boom and (1) head to Quick Hitch*
*** Required to convert additional heads to Quick Hitch*
**** Required to level Flail-Axe for Quick Hitch*

MAVERICK BOOM

24', 30' Articulated Models

F.O.B. Seguin, TX

STANDARD SPECIFICATIONS

- Bolt-On Undermount with Front and Rear Attached Rails
- Boom Features Dipper, Lift, and Telescopic Sections w/ Axle-Mounted Boom Rest
- Standard Boom Structure Made from Alloy Steel, Designed Box Section
- Main Pivot Features 2' Chrome Pins with Greaseable, Hardened Steel Bushings
- Hydraulic Pivot is Featured on Head for Maneuverability.
- Front Axle Mounted Cylinder for Automatic Self-stabilization of Unit
- Self Contained Front Mounted Hydraulic System with CAN Based Data Acquisition
- Self-Cleaning, Thermostatically Controlled Oil-to-Air Cooler
- Ability to Mow Horizontally Within 6" of Rear Tire
- Boom Reach: **24' Models=** Up-21'10", Out-24', Down-14'8" **30' Models=** Up-27'10", Out-30', Down-19'3"
- Exclusive Slewing Ring Bearing is Utilyzed for Boom Maneuverability and 180° Horizontal Boom Swing
- Joystick, Mount Kit, All Wheel Weight, Polycarbonate Window Included in Base Price
- **Tractor Req: Min of 8,500 lbs and 90 HP. Min 90" Wheelbase and 18" Ground Clearance**

HEAD SPECIFICATIONS

- 58" Cutting Diameter
- Alloy Deck Material with Double Wall Side Skirt
- 4-1/2"x9" Heat-Treated Alloy Spindle
- 199 HP Motor Direct-Coupled
- 2-1/2" x 5" Stacked Three-Leaf Blade Bar, T1 Steel
- 5/8" x 5" High-Carbon Alloy Steel Blade, 360° Swing
- Standard (1) year limited parts and labor warranty.

PRODUCT ORDER CODE	DESCRIPTION	APPRX. WEIGHT		LIST PRICE
	Maverick Base Unit *(One Choice Required)*			
04802400	24' Maverick w/ Telescoping Boom (Joystick Control)	6000		54,052
04803024	30' Maverick w/ Telescoping Boom (Joystick Control)	7500		58,830
	Mower Heads *(One Choice Required)*			
02981782	60" Rotary w/Ctr Hyd Door, Blade Bar & Head Swivel	919		16,942
02983590	60" Rotary w/Ctr Hyd Door, Blade Bar (No Head Swivel)			15,118
02981783	50" Rotary w/Ctr Hyd Door, Blade Bar & Head Swivel			16,117
02984823	50" Rotary w/Ctr Hyd Door, Blade Pan & Head Swivel			15,295
02983554	48" Flail-Axe (No Head Swivel)	770		13,714
02984371	48" Flail-Axe w/Head Swivel			15,539
02983586	48" Flail-Axe, SHD Cuttershaft (3 oz Knives)			15,086
02983560	Bomford 60" HD Grass Flail (No Head Swivel)	870		14,394
02985449	Bomford 60" HD Grass Flail w/Head Swivel			16,218
02983548	5' Timber Cat Sickle Bar	440		11,688
02983549	7' Timber Cat Sickle Bar	520		12,695
02983557	48" (2 Blade) Buzzbar Tree Cutter	550		11,046
02983556	69" (3 Blade) BuzzBar Tree Cutter	705		13,776
	Note: Heads Below Are For Use On 24' Booms Only			
02983555	90" (4 Blade) Buzzbar Tree Cutter	1098		16,467
02982531	Ditcher Head (Hitch Post Mounted)			12,807

MAVERICK BOOM

24', 30' Articulated Models

F.O.B. Seguin, TX

PRODUCT ORDER CODE	DESCRIPTION	APPRX. WEIGHT		LIST PRICE
	Options			
02981992A	Additional Operators and Parts Manuals			54
02989463	Quick Hitch Kit*			3,553
02989464	Hydraulic Kit for Quick Hitch Head**			471
02990399	Ditcher Stand Kit ***			680
02975647M	Flail-Axe Jack Stand Kit*** (02975647)			307
02984400	HD Grass Flail Jack Stand Kit***			301
02984407	JD6615/6715/7220/7320/7130/7230 Oil Cooler Brush Guard			602
02982002	Mounting Labor & Oil			6,603
02791800MV	Special Mower Paint (02791800)			1,274
02968967	Special Tractor Paint			5,537
00889899MV	Additional 12 Month Warranty (00889899)			4,014

** Includes all components to convert boom and (1) head to Quick Hitch*
*** Required to convert additional heads to Quick Hitch*
**** Required to level heads for Quick Hitch*

MAVERICK BOOM

24' Mount Kit Options

F.O.B. Seguin, TX

TRACTOR DESCRIPTION	MOUNT KIT	MAXIMUM TIRE SIZE	
		FRONT	REAR
Case IH			
Case-IH MXU100/110 Cab/4wd (24' Models Only)	02982358	14.9-24	18.4-34
Case-IH MXU115/125/130/135 Cab/4wd	02982341	14.9-24	18.4-34
Case-IH Maxxum 110/110 Pro/120 Pro/130 Pro (24' Models Only)	02986046	14.9-24	18.4-34
Case-IH Maxxum 115/125/125 Pro/140 Pro	02986049	14.9-24	18.4-34
Challenger			
Challenger MT445B/455B/465B Cab/4wd (Tier III Engine Only)	02990779	14.9-24	18.4-34
John Deere			
JD 6215/6415 Cab/4wd	02982548	13.6-24	18.4-34
JD 6220/6320/6420 (Tier II) Cab/4wd	02982577	13.6-24	18.4-34
JD 6230/6330/6430 "Mid Spec" Cab/4wd	02986011	13.6-24	18.4-34
JD 6230/6330/6430 Premium Cab/4wd w/ Panoramic Door	02991611	13.6-24	18.4-34
JD 6615/6715 Cab/4wd	02982450	13.6-24	18.4-34
JD 7210/7410/7510 Cab/4wd	02985971	13.6-28	18.4-34
JD 7220/7320 Cab/4wd (34" Flanged Rear Whl)	02983364	13.6-28	18.4-34
JD 7220/7320 Cab/4wd (38" Flanged Rear Whl)	02985173	14.9-28	18.4-38
JD 7220/7320 Cab/4wd (38" Rack & Pinion Whl)	02983920	14.9-28	18.4-38
JD 7130/7230 "Mid" Cab/4wd (4 or 6 cyld / 55 gal. fuel tank)	02987697	13.6-28	18.4-38
JD 7130/7230 "Prem" Cab/4wd (6 cyld / 55 gal. fuel tank / Flanged Rear Whl / Built Before Nov. 1, 2010)	02986620	14.9-28	18.4-38
JD 7130/7230 "Prem" Cab/4wd (6 cyld / 55 gal. fuel tank / Rack & Pinion Rear Whl / Built Before Nov. 1, 2010)	02990148	14.9-28	18.4-38
JD 7130/7230 "Prem" Cab/4wd (6 cyld IVT / 55 gal. fuel tank / Flanged Rear Whl / Built Before Nov. 1, 2010)	02986829	14.9-28	18.4-38
Massey Ferguson			
MF 5460 Cab/4wd (Tier II Engine Only)	02988138	14.9-24	18.4-34
MF 5465 Cab/4wd (Tier II Engine Only)	02983605	14.9-24	18.4-34
MF 5465/5475 Cab/4wd (Tier III Perkins Engine Only)	02991112	14.9-28	18.4-38
MF 5465/5475 Cab/4wd (Tier III Sisu Engine Only)	02991353	14.9-28	18.4-38
New Holland			
NH TS100A/110A Cab/4wd (24' Models Only)	02982358	14.9-24	18.4-34
NH TS115A/125A/130A/135A Cab/4wd	02982341	14.9-24	18.4-34
NH T6010/6020/6040/6060 Cab/4wd (Built Before May 2010)	02986046	14.9-24	18.4-34
NH T6010/6020/6040/6060 Cab/4wd (Built After May 2010)	02991292	14.9-24	18.4-34
NH T6030/6050/6070 Cab/4wd (Built Before May 2010)	02986049	14.9-24	18.4-34
NH T6030/6050/6070 Cab/4wd (Built After May 2010)	02991293	14.9-24	18.4-34

OTHER SPECIFICATIONS

(1) Always use the maximum tire size for favorable ground clearance.
(2) Mount kits are designed for use with 4wd tractors only.
(3) Tractors should not be ordered with armrest-integrated controls.
(4) Tractors must be equipped with flanged rear rims unless otherwise noted.
(5) The right handrail must be removed for boom transport clearance.
(6) John Deere tractors must include a standard through-hood exhaust.
(7) Case-New Holland mount kits include an exhaust relocation feature.

MAVERICK BOOM

30' Mount Kit Options

F.O.B. Seguin, TX

Note: 30' Maverick units are to be mounted on 4WD model tractors only

TRACTOR DESCRIPTION	MOUNT KIT	MAXIMUM TIRE SIZE	
		FRONT	REAR
Case IH			
Case-IH MXU115/125/130/135 Cab/4wd	02981892	14.9-24	18.4-34
Case-IH Maxxum 115/125/125 Pro/140 Pro	02986052	14.9-24	18.4-34
Challenger			
Challenger MT445/455/465B Cab/4wd (4 Cyl.-TIII Engine)	02991792	14.9-28	18.4-38
Challenger MT475B Cab/4wd (Tier III)	02989840	14.9-28	18.4-38
John Deere			
JD 6615/6715 Cab/4wd	02982395	13.6-24	18.4-34
JD 7210/7410/7510 Cab/4wd (34" Flanged Rear Rim)	02984191	13.6-28	18.4-34
JD 7220/7320 Cab/4wd (34" Flanged Rear Whl)	02983096	13.6-28	18.4-34
JD 7220/7320 Cab/4wd (38" Flanged Rear Whl)	02984772	14.9-28	18.4-38
JD 7220/7320 Cab/4wd (38" Rack & Pinion Whl)	02984684	14.9-28	18.4-38
JD 7130 "Mid" Cab/4wd (4 cyld / 55 gal. fuel tank)	02989932	13.6-28	18.4-38
JD 7130/7230 "Mid" Cab/4wd (6 cyld / 55 gal. fuel tank)	02986363	13.6-28	18.4-38
JD 7130/7230 Premium Cab/4wd w Panoramic Door (55 Gal Tank Only)	02991723	14.9-28	18.4-38
JD 7130/7230 "Prem" Cab/4wd (6 cyld / 55 gal. fuel tank / Flanged Rear Whl / Built Before Nov. 1, 2010)	02986617	14.9-28	18.4-38
Massey Ferguson			
MF 5465 Cab/4wd (Tier II Engine Only)	02984419	14.9-24	18.4-34
MF 5465/5475 Cab/4wd (Tier III Perkins Engine Only)	02988639	14.9-28	18.4-38
MF 5465/5475 Cab/4wd (Tier III Sisu Engine Only)	02991559	14.9-28	18.4-38
New Holland			
NH TS115A/125A/130A/135A Cab/4wd	02981892	14.9-24	18.4-34
NH T6030/6050/6070 Cab/4wd (Built Before May 2010)	02986052	14.9-24	18.4-34
NH T6030/6050/6070 Cab/4wd w/ Command Armrest (Built before May 2010)	02987356	14.9-24	18.4-34
NH T6030/6050/6070 Cab/4wd (Built After May 2010)	02991294	14.9-24	18.4-34
NH T6030/6050/6070 Cab/4wd w/ Command Armrest (Built after May 2010)	02991295	14.9-24	18.4-34

OTHER SPECIFICATIONS

(1) Always use the maximum tire size for favorable ground clearance.
(2) Mount kits are designed for use with 4wd tractors only.
(3) Tractors should not be ordered with armrest-integrated controls.
(4) Tractors must be equipped with flanged rear rims unless otherwise noted.
(5) The right handrail must be removed for boom transport clearance.
(6) John Deere tractors must include a standard through-hood exhaust.
(7) Case-New Holland mount kits include an exhaust relocation feature.

REAR MOUNT BOOM

17', 20', 23' Articulated Models

F.O.B. Seguin, TX

STANDARD SPECIFICATIONS

- Welded Steel Plate Frame Mounted to the Rear Axle and Three-Point Hitch
- 60-Gallon Hydraulic Reservoir with 12 Micron Filtration
- 4" King Post with 3" Tapered Roller Bearings
- Inner Boom Arm 6"x 6" x 1/4" Steel Tubing
- Outer Boom Arm 5"x 5" x 1/4" Steel Tubing
- 120° Horizontal Boom Swing
- Boom Reaches:
  - 17: Up-19'6", Out- 18'9", Down- 8'9"
  - 20: Up-20'3", Out- 21', Down- 12'11"
  - 23: Up-22'10", Out- 22'4", Down- 15'6"
- Stacked Hydraulic Pump @ 51 GPM @ 2500 PSI
- 4-Spool, Open Center, Tapered Positive Metering Valve
- Safety Cage (ROPS Units ONLY)
- Tractor Req: Min. 5,000 lbs. with 65 HP rating
- Mount Kit & Polycarbonate Window Included in Base Price
- Front End Weight to be Supplied by the End User.

HEAD SPECIFICATIONS

- 60" Boom-Axe Head
- 10-Gauge Top Deck with 1/4" Side Skirts
- Full Length Replaceable Skid Shoes
- 4-1/2"x 9" Heat-Treated Alloy Spindle
- 101 HP Motor Direct-Coupled
- 2-1/2"x 5" Stacked Three-Leaf Blade Bar, T1 Steel
- 5/8"x 5" High-Alloy Steel Blade, 360° Swing
- Front & Rear Safety Deflectors & Gate
- Standard (1) year limited parts and labor warranty.

PRODUCT ORDER CODE	DESCRIPTION	APPRX. WEIGHT		LIST PRICE
	REAR MOUNT BASE UNIT *(One Choice Required)*			
04912217	17' Rear-Mount Boom Assembly	6000		29,246
04912218	20' Rear-Mount Boom Assembly	6100		31,174
04912219	23' Rear-Mount Boom Assembly	6200		32,565
	MOWER HEAD *(One Choice Required)*			
02974676	60" Boom-Axe with Bar	820		10,689
02974680	50" Boom-Axe with Pan	810		10,963
02974681	50" Boom-Axe with Bar	750		10,436
02970299	48" Flail Axe	700		12,515
02963870	60" SHD Flail	760		11,608
02974204	90" Buzzbar Head	1098		16,467
02979250	69" Buzzbar Head	705		13,844
02979266	48" Buzzbar Head	550		11,099
02972145	5' Timbercat	440		12,280
02972146	7' Timbercat	520		13,077
	MOUNT KIT *(One Choice Required)*			
RM-01	NH 5610,6610,7610,5640,6640,7740 (Includes 02963021, 00751562, 02963819, 02963501)			N/C
RM-02	NH 5640,6640,7740 with CAB (Includes 02965837, 00751562, 02963501)			N/C
RM-03	NH 5610, 6610, 7610 Series II with CAB (Includes 02962115, 00751562, 02963501)			N/C
RM-04	John Deere 6020/6030/7020/7030 Series Cab (Includes 02975041, 00765452, 02963501)			N/C
RM-05	Universal (Dealer Must Modify) (Includes 02964379, 00751565, 02963819, 02963501)			N/C
RM-06	Universal (Dealer Must Modify) (Includes 02964379, 00751565, 02963501, 02964333)			N/C

REAR MOUNT BOOM

17', 20', 23' Articulated Models

F.O.B. Seguin, TX

PRODUCT ORDER CODE	DESCRIPTION	APPRX. WEIGHT		LIST PRICE
	OPTIONS			
02924700	Additional Operators and Parts Manuals			54
02976534	Quick Hitch Kit*			2,635
02976535	Hydraulic Kit for Quick Hitch Head**			468
02975647M	Flail-Axe Jack Stand Kit*** (02975647)			307
02959639	Caster Wheel Kit, Super Heavy Duty Flail	24		1,515
02972609	Wheel Weight Kit-500 lbs.	500		1,266
02971789	Wheel Weight Kit-1300 lbs.	1300		2,709
02976671	Additional 408 lbs. Kit for 1300 lbs. Wheel Weight	408		1,593
02976670	Additional 680 lbs. Kit for 1300 lbs. Wheel Weight	680		2,363
02963038	Mounting Labor & Oil			7,197
02791800	Special Mower Paint			1,243
02968967	Special Tractor Paint			5,537
00889899RW	Additional 12 Month Warranty (00889899)			4,014

** Includes all components to convert boom and (1) head to Quick Hitch*
****Required to level Flail-Axe for Quick Hitch*
**** Required to level Flail-Axe for Quick Hitch*

SAMURAI BOOM

18', 22', 25' Articulated Models

F.O.B. Seguin, TX

STANDARD SPECIFICATIONS

- 4" X 4" Square Tubular Frame
- Features a 2 1/2" greaseable "king post" style turning arm.
- Main pivots points utilize 2' pins with greaseable, hardened steel bushings.
- Self contained hydraulic system w/integrated oil cooler.
- 20 gal Front-Mounted Reservoir/35 gal Total System Volume
- Motor Circuit: Gear Pump Rated @ 30 gpm (66.5 hp) & 3,800 psi @ 2,200 rpm.
- Control Circuit: Gear Pump Rated @ 12 gpm (21 hp) & 3,000 psi @ 2,200 rpm.
- Inner Boom Arm 6"x6"x1/4" Alloy Steel Tubing
- Outer Boom Arm 5"x5"x1/4" Alloy Steel Tubing
- 120° Horizontal Boom Swing
- Boom Reach: **18' Models**= Up-18' 7", Out-18', Down-5' 1" **22' Models**= Up-22' 7", Out-22', Down-9' 1" **25' Models**= Up-25' 7", Out-25', Down-12' 1".
- Mount Kit, Wheel Weight, and Polycarbonate Window Included in Base Price
- Tractor Req: Min of 8,500 lbs and 90 eng. hp. Min 90" Wheelbase and 18" Ground Clearance

HEAD SPECIFICATIONS

- 58" Cutting Diameter
- Alloy Deck Material with Double Wall Side Skirt
- 4-1/2"x9" Heat-Treated Alloy Spindle
- 152 HP Direct-Coupled Gear Motor
- Stacked Three-Leaf, Alloy Steel Blade Bar
- 5/8" x 5" Double -Edged, Tempered Steel Blades, 360° Swing
- Standard (1) year limited parts and labor warranty.

PRODUCT ORDER CODE	DESCRIPTION	APPRX. WEIGHT		LIST PRICE
Boom Base Unit *(One Choice Required)*				
04851802	18' Samurai Boom- 4wd (Joystick Control)			41,067
04851800	18' Samurai Boom- 2wd (Joystick Control)			41,067
04851801	18' Samurai Boom- 2wd (Cable Control)			34,519
04851803	18' Samurai Boom- 4wd (Cable Control)			34,519
04852202	22' Samurai Boom- 4wd (Joystick Control)			42,325
04852200	22' Samurai Boom- 2wd (Joystick Control)			42,325
04852203	22' Samurai Boom - 4wd (Cable Control)			35,777
04852201	22' Samurai Boom- 2wd (Cable Control)			35,777
04852502	25' Samurai Boom- 4wd (Joystick Control)			44,555
04852500	25' Samurai Boom- 2wd (Joystick Control)			44,555
04852503	25' Samurai Boom- 4wd (Cable Control)			38,007
04852501	25' Samurai Boom- 2wd (Cable Control)			38,007
Mower Head *(One Choice Required)*				
02986190SJ	60" Rotary w/Ctr Hyd Door, Blade Bar & Head Swivel (Joystick Control)	1115		14,690
02986190SC	60" Rotary w/Ctr Hyd Door, Blade Bar & Head Swivel (Cable Control)	1115		14,690
02986203	60" Rotary w/Ctr Hyd Door, Blade Bar (No Head Swivel)	1061		12,664
02986213SJ	50" Rotary w/Ctr Hyd Door, Blade Bar & Head Swivel (Joystick Control)			13,992
02986213SC	50" Rotary w/Ctr Hyd Door, Blade Bar & Head Swivel (Cable Control)			13,992
02986211	50" Rotary w/Ctr Hyd Door, Blade Bar (No Head Swivel)			11,966
02986212SJ	50" Rotary w/Ctr Hyd Door, Blade Pan & Head Swivel (Joystick Control)			13,169
02986212SC	50" Rotary w/Ctr Hyd Door, Blade Pan & Head Swivel (Cable Control)			13,169
02986210	50" Rotary w/Ctr Hyd Door, Blade Pan (No Head Swivel)			11,143

SAMURAI BOOM

18', 22', 25' Articulated Models

F.O.B. Seguin, TX

PRODUCT ORDER CODE	DESCRIPTION	APPRX. WEIGHT		LIST PRICE
Mower Head Cont'd. *(One Choice Required)*				
02986251SJ	48" Flail-Axe w/Head Swivel (Joystick Control)			14,541
02986251SC	48" Flail-Axe w/Head Swivel (Cable Control)			14,541
02986253	48" Flail-Axe (No Head Swivel)	777		12,515
02986252SJ	48" Flail-Axe, SHD Cuttershaft (3 oz Knives) w/Head Swivel (Joystick Control)			15,731
02986252SC	48" Flail-Axe, SHD Cuttershaft (3 oz Knives) w/Head Swivel (Cable Control)			15,731
02988228	48" Grass Flail, SHD Cuttershaft			13,704
02988229	60" Grass Flail, SHD Cuttershaft	800		13,813
02988233	Bomford 60" HD Grass Flail (Non-Swivel)			12,640
02988881	Bomford 60" HD Grass Flail (Swivel)- Requires Swivel Wiring Kit			14,395
02988255	5' Timber Cat Sickle Bar	682		13,127
02988256	7' Timber Cat Sickle Bar	770		13,944
02986235	90" Buzzbar (4 Blade)	1098		15,598
02986229	69" Buzzbar (3 Blade)	705		13,845
02986219	48" Buzzbar (2 Blade)	550		11,099
02988854	Ditcher Head (Hitch Post Mounted)			12,869
Options				
02986950A	Additional Operators and Parts Manuals			54
02989326	Quick Hitch Kit*			3,948
02989327	Hydraulic Kit for Quick Hitch Head**			523
02975647	Flail-Axe Jack Stand Kit***			342
02985029	Mounting Labor & Oil			6,259
02791800	Special Mower Paint			1,243
02968967	Special Tractor Paint			5,537
00889899S	Additional 12 Month Warranty (00889899)			4,014

** Includes all components to convert boom and (1) head to Quick Hitch*
*** Required to convert additional heads to Quick Hitch*
**** Required to level Flail-Axe for Quick Hitch*

SAMURAI BOOM

18', 22', 25' Mount Kit Options

F.O.B. Seguin, TX

Note: 25' Samurai units are to be mounted on 4WD model tractors only

TRACTOR DESCRIPTION	MOUNT KIT	MAXIMUM TIRE SIZE		
		2WD Front	4WD Front	Rear
Case IH				
Case-IH Maxxum 110/110 Pro/120 Pro/130 Pro ROPS/2wd (Cable)	02988516	10.00-16	N/A	18.4-34
Case-IH Maxxum 110/110 Pro/120 Pro/130 Pro Canopy/2wd (Cable)	02988512	10.00-16	N/A	18.4-34
Case-IH Maxxum 110/110 Pro/120 Pro/130 Pro Cab/2wd (Cable)	02988517	10.00-16	N/A	18.4-34
Case-IH Maxxum 110/110 Pro/120 Pro/130 Pro Cab/4wd (Cable)	02987836	N/A	14.9-24	18.4-34
Case-IH Maxxum 110/110 Pro/120 Pro/130 Pro Cab/2wd (Joystick)	02988519	10.00-16	N/A	18.4-34
Case-IH Maxxum 110/110 Pro/120 Pro/130 Pro Cab/4wd (Joystick)	02987863	N/A	14.9-24	18.4-34
Case-IH Maxxum 115/125/125 Pro/140 Pro Cab/4wd (Cable)	02988242	N/A	14.9-24	18.4-34
Case-IH Maxxum 115/125/125 Pro/140 Pro Cab/4wd (Joystick)	02988241	N/A	14.9-24	18.4-34
Case-IH Maxxum 115/125/125 Pro/140 Pro ROPS/2wd (Cable)	02989875	10.00-16	N/A	18.4-34
Challenger				
Challenger MT445B/455B/465B Cab/2wd (Tier III Engine Only / Frt Axle Stabilizer Not Incl. /Cable)	02990186	10.00-16	N/A	18.4-34
Challenger MT445B/455B/465B Cab/4wd (Tier III Engine Only / Cable)	02989997	N/A	14.9-24	18.4-34
Challenger MT445B/455B/465B Cab/2wd (Tier III Engine Only / Frt Axle Stabilizer Not Incl. / Joystick)	02990188	10.00-16	N/A	18.4-34
Challenger MT445B/455B/465B Cab/4wd (Tier III Engine Only / Joystick)	02990793	N/A	14.9-24	18.4-34
John Deere				
JD 6110/6210/6310/6405/6410 Cab/2wd (Frt Axle Stabilizer Not Incl. / Joystick)	02988769	10.00-16	N/A	18.4-34
JD 6110/6210/6310/6405/6410 Cab/4wd (Frt Axle Stabilizer Not Incl. / Joystick)	02988769	N/A	12.4-24	18.4-34
JD 6120/6215/6220/6320/6415/6420 Cab/4wd (Joystick)	02988766	N/A	12.4-24	18.4-34
JD 6120/6215/6220/6320/6415/6420 ROPS/2wd (Cable)	02989021	10.00-16	N/A	18.4-34
JD 6230/6330/6430 "Mid-Spec" Cab/2wd (Cable)	02988392	10.00-16	N/A	18.4-34
JD 6230/6330/6430 "Mid-Spec" Cab/4wd (Cable)	02987668	N/A	13.6-24	18.4-34
JD 6230/6330/6430 "Mid-Spec" Cab/2wd (Joystick)	02987787	10.00-16	N/A	18.4-34
JD 6230/6330/6430 "Mid-Spec" Cab/4wd (Joystick)	02987809	N/A	13.6-24	18.4-34
JD 6230/6330/6430 "Mid-Spec" ROPS/2wd (Cable)	02989255	10.00-16	N/A	18.4-34
JD 6230/6330/6430 "Mid-Spec" ROPS/4wd (Cable)	02988182	N/A	13.6-24	18.4-34
JD 6230/6330/6430 "Mid-Spec" Canopy/4wd (Cable)	02988506	N/A	13.6-24	18.4-34
JD 6230/6330/6430 "Mid-Spec" ROPS/4wd (Joystick)	02988180	N/A	13.6-24	18.4-34
JD 7210/7410/7510 Cab/2wd (Cable)	02987707	11.00-16	N/A	18.4-34
JD 7130/7230 "Mid-Spec" Cab/2wd (Frt Axle Stabilizer Not Incl. / Joystick)	02991302	11.00-16	N/A	18.4-38
JD 7130/7230 "Mid-Spec" Cab/4wd (Cable)	02987845	N/A	13.6-28	18.4-38
JD 7130/7230 "Mid-Spec" Cab/4wd (Joystick)	02990032	N/A	13.6-28	18.4-38
McCormick				
McCormick T-Max 100/110 2012- Cab/4wd (Cable Control)	02992340	N/A	11.2-24	16.9-30
Massey Ferguson				
MF 5465/5475 Cab/4wd (Tier III Engine Only - Cable)	02988061	N/A	14.9-24	18.4-34
MF 5465/5475 Cab/4wd (Tier III Engine Only - Joystick)	02988004	N/A	14.9-24	18.4-34

OTHER SPECIFICATIONS

(1) Always use the maximum tire size for favorable ground clearance.
(2) Tractors should not be ordered with armrest-integrated controls.
(3) Tractors must be equipped with flanged rear rims unless otherwise noted.
(4) Right handrail removal may be necessary for boom transport clearance.
(5) John Deere tractors must include a standard through-hood exhaust.
(6) John Deere 7030 series fuel tanks must not exceed 66 gal.
(7) Case-New Holland mount kits include an exhaust relocation feature.

SAMURAI BOOM

18', 22', 25' Mount Kit Options

F.O.B. Seguin, TX

Note: 25' Samurai units are to be mounted on 4WD model tractors only

TRACTOR DESCRIPTION	MOUNT KIT	MAXIMUM TIRE SIZE		
		2WD Front	4WD Front	Rear
New Holland				
NH 5640/6640/7740 Cab/2wd (Cable)	02989656	10.00-16	N/A	18.4-34
NH T6020/6040/6060 ROPS/2wd (Cable)	02988516	10.00-16	N/A	18.4-34
NH T6020/6040/6060 Canopy/2wd (Cable)	02988512	10.00-16	N/A	18.4-34
NH T6020/6040/6060 Cab/2wd (Built Before May 2010 / Cable)	02988517	10.00-16	N/A	18.4-34
NH T6020/6040/6060 Cab/2wd (Built After May 2010 / Cable)	02991296	10.00-16	N/A	18.4-34
NH T6020/6040/6060 Cab/4wd (Built Before May 2010 / Cable)	02987836	N/A	14.9-24	18.4-34
NH T6020/6040/6060 Cab/4wd (Built After May 2010 / Cable)	02991298	N/A	14.9-24	18.4-34
NH T6020/6040/6060 Cab/2wd (Built Before May 2010 / Joystick)	02988519	10.00-16	N/A	18.4-34
NH T6020/6040/6060 Cab/2wd (Built After May 2010 / Joystick)	02991297	10.00-16	N/A	18.4-34
NH T6020/6040/6060 Cab/4wd (Built Before May 2010 / Joystick)	02987863	N/A	14.9-24	18.4-34
NH T6020/6040/6060 Cab/4wd (Built After May 2010 / Joystick)	02991299	N/A	14.9-24	18.4-34
NH T6030/6050 ROPS/2wd (Cable)	02989875	10.00-16	N/A	18.4-34
NH T6030/6050/6070/6080 Cab/4wd (Built Before May 2010 / Cable)	02988242	N/A	14.9-24	18.4-34
NH T6030/6050/6070/6080 Cab/4wd (Built After May 2010 / Cable)	02991300	N/A	14.9-24	18.4-34
NH T6030/6050/6070/6080 Cab/4wd (Built Before May 2010 / Joystick)	02988241	N/A	14.9-24	18.4-34
NH T6030/6050/6070/6080 Cab/4wd (Built After May 2010 / Joystick)	02991301	N/A	14.9-24	18.4-34

OTHER SPECIFICATIONS

(1) Always use the maximum tire size for favorable ground clearance.
(2) Tractors should not be ordered with armrest-integrated controls.
(3) Tractors must be equipped with flanged rear rims unless otherwise noted.
(4) Right handrail removal may be necessary for boom transport clearance.
(5) John Deere tractors must include a standard through-hood exhaust.
(6) John Deere 7030 series fuel tanks must not exceed 66 gal.
(7) Case-New Holland mount kits include an exhaust relocation feature.

VERSA BOOM

17", 20", 23' Articulated Models

F.O.B. Seguin, TX

STANDARD SPECIFICATIONS

- Welded Steel Plate Frame Braced to the Front Bolster & Rear Axle
- 60-Gallon Hydraulic Reservoir with 12-Micron Filtration
- 1300 lbs. Counterwight Tank Mounted
- 4" King Post with 3" Tapered Roller Bearings
- Inner Boom Arm 6"x6"x1/4" Steel Tubing
- Exterior Boom Arm 5"x5"x1/4" Steel Tubing
- 120° Horizontal Boom Swing
- Stacked Hydraulic Pump Rated @ 51 GPM @ 2500 PSI
- 4-Spool, Open Center, Tapered Positive Metering Valve
- Boom Reach: **17' Models**= Up-19'6", Out-18'9", Down-8'9" **20' Models**= Up-20'3", Out-20'7", Down-12'3"

23' Models- Up-22'10", Out-23'10", Down-15'6"

- Axle-Mounted Boom Rest
- Mount Kit, 1,300# Wheel Weight & Polycarbonate Window Included in Base Price

HEAD SPECIFICATIONS

- 60" Boom-Axe Head
- 10-Gauge Deck with 1/4" Side Skirts
- Full-Length Replaceable Skid Shoes
- 4-1/2" Hardened Spindle
- 90 HP Motor Directly Splined to the Spindle
- 2-1/2"x5" Stacked Three-Leaf Blade Bar
- 5/8"x5" Blades, 360° Swing
- Front/Rear Deflectors
- Standard (1) year limited parts and labor warranty.

PRODUCT ORDER CODE	DESCRIPTION	APPRX. WEIGHT		LIST PRICE
	Versa Boom Base Unit *(One Choice Required)*			
04953001	17' Versa-Boom (Joystick Control)	3850		40,076
04951001	17' Versa-Boom (Cable Control)	3800		31,954
04953005	20' Versa-Boom (Joystick Control)	4050		41,614
04951005	20' Versa-Boom (Cable Control)	4000		34,018
04953009	23' Versa-Boom (Joystick Control)	4150		42,977
04951009	23' Versa-Boom (Cable Control)	4100		35,422
	Mower Head *(One Choice Required)* ***See Options Below for Extra Mower Head Options***			
02974676	60" Boom-Axe with Bar	820		10,689
02974680	50" Boom-Axe with Pan	810		10,963
02974681	50" Boom-Axe with Bar	750		10,436
02970299	48" Flail Axe	700		12,515
02963870	60" SHD Flail	760		11,608
02974204	90" Buzzbar Head	1098		16,467
02979250	69" Buzzbar Head	705		13,844
02979266	48" Buzzbar Head	550		11,099
02972145	5' Timbercat	440		12,280
02972146	7' Timbercat	520		13,077
02215421	Ditcher Head (Mounted to Lift Section)	600		12,869
02215422	Ditcher Head - Reverse Rotation (Mounted to Lift Section)	600		12,869
02985350	Ditcher Head (Hitch-Post Mounted)			12,869
	Options			
02897300	Additional Operators and Parts Manuals			54
02976534	Quick Hitch Kit*			2,635
02976535	Hydraulic Kit for Quick Hitch Head**			468
02975647	Flail-Axe Jack Stand Kit***			342
02977500	60" SHD Flail Jack Stand Kit****			265

** Includes all components to convert boom and (1) head to Quick Hitch*
*** Required to convert additional heads to Quick Hitch*
**** Required to level Flail-Axe for Quick Hitch*
***** Required to level SHD Flail for Quick Hitch*

VERSA BOOM

17", 20", 23' Articulated Models

F.O.B. Seguin, TX

PRODUCT ORDER CODE	DESCRIPTION	APPRX. WEIGHT		LIST PRICE
	Options - *Continued*			
02990399	Ditcher Stand Kit ***			680
02990405	Hose Kit, Tractor Aux to Chute*****			805
02959639	Caster Wheel Kit, Super Heavy Duty Flail	24		1,515
02966905	Accumulator Kit Option	25		1,367
02982874	Case-IH JXU Pump Guard Kit NH TL-A Pump Guard Kit			453
02982767	Case-IH JXU Replacement Battery (Factory Mount Only) NH TL-A Replacement Battery (Factory Mount Only)			202
02981109	Case-IH MXU & Maxxum Rear ROPS Screen Kit NH TS-A & T6000 Rear ROPS Screen Kit			449
02980652	Case-IH MXU & Maxxum Pump Guard Kit NH TS-A & T6000 Pump Guard Kit			453
02980929	Case-IH MXU & Maxxum Aluminum ROPS Canopy NH TS-A & T6000 Aluminum ROPS Canopy			1,000
02981353	NH TL Pump Guard Kit			453
02977499	JD 6015, 6020 & 6030 Rear Cab Screen Kit JD 7020 & 7030 "Prem/Mid-Spec" Rear Cab Screen Kit			791
02979486	JD 6015 & 6020 Rear ROPS Screen Kit			449
02979080	JD 6015, 6020 & 6030 Pump Guard Kit JD 7020 & 7030 "Prem/Mid-Spec" Pump Guard Kit			453
02976333	JD 6015 & 6020 Aluminum ROPS Canopy			1,000
02976500	JD 7020 Wheel Weight Adapter Kit (34" Flanged Axle)			442
02978473	JD 7020 & 7030 "Prem" Whl Wt Adapter Kit (38" Flanged Axle)			442
02978103	JD 7020 & 7030 "Prem" Whl Wt Adapter (38" Rack & Pinion)			442
	Kits Below Are To Interchange A Versa Mower/Head With Your Existing Boom- Requires Purchase of the Versa Mower Head Separately (See Versa Mower Page)			**Also**
02964297	Versa Boom to Mower Interchange Extension Arm- Non Breakaway			3,908
02965429	Versa Boom to Mower Interchange Extension Arm- Breakaway Type			5,044
02976671	Additional 408 lbs. Kit for 1300 lbs. Wheel Weight	408		1,593
02976670	Additional 680 lbs. Kit for 1300 lbs. Wheel Weight	680		2,363
02963038	Mounting Labor & Oil			7,197
02791800	Special Mower Paint			1,243
02968967	Special Tractor Paint			5,537
00889899VB	Additional 12 Month Warranty (00889899)			4,014

**** Required to level Ditcher for Quick Hitch*
****** Required to operate Ditcher Head Discharge Chute*

VERSA BOOM

17", 20", 23' Mount Kits

F.O.B. Seguin, TX

TRACTOR DESCRIPTION	MOUNT KIT	MAXIMUM TIRE SIZE		
		2WD Front	4WD Front	Rear
Case IH				
Case-IH Farmall 85U/95U/105U Cab/2&4wd (Cable/Fender Tank)	02986803	10.00-16	12.4-24	18.4-30
Case-IH Farmall 85U/95U/105U Cab/2&4wd (Joystick/Fender Tank)	02987108	10.00-16	12.4-24	18.4-30
Case-IH Farmall 85U/95U/105U ROPS/2&4wd (Fender Tank)	02989928	10.00-16	12.4-24	18.4-30
Case-IH JX1080U/1090U/1100U Cab/2&4wd (Cable/Fender Tank)	02982098	10.00-16	12.4-24	18.4-30
Case-IH JX1080U/1090U/1100U Cab/2&4wd (Joystick/Fender Tank)	02984094	10.00-16	12.4-24	18.4-30
Case-IH JX1080U/1090U/1100U ROPS/2&4wd (Fender Tank)	02985822	10.00-16	12.4-24	18.4-30
Case-IH Maxxum 115/125/125 Pro/140 Pro Cab/2&4wd (Cable/Fender Tank)	02981137	10.00-16	12.4-24	18.4-30
Case-IH Maxxum 115/125/125 Pro/140 Pro Cab/2&4wd (Joystick/Fender Tank)	02982226	10.00-16	12.4-24	18.4-30
Case-IH Maxxum 115/125/125 Pro/140 Pro Cab 2/4wd (Factory Loader Valve/Cable Control/Fender Tank)	02982832	12.4-24	12.4-24	18.4-34
Case-IH Maxxum 115/125/125 Pro/140 Pro Cab/2&4wd (540 PTO Pump/Joystick/Fender Tank)	02989499	12.4-24	12.4-24	18.4-34
Case-IH Maxxum 115/125/125 Pro/140 Pro ROPS/2&4wd (Fender Tank)	02984650	10.00-16	12.4-24	18.4-30
Case-IH MXU100/110 Cab/2wd (Cable/Fender Tank)	02982228	10.00-16	N/A	18.4-34
Case-IH MXU100/110 Cab/2wd (Joystick/Fender Tank)	02981898	10.00-16	N/A	18.4-34
Case-IH MXU100/110 Cab/4wd (Cable/Fender Tank)	02982809	N/A	12.4-24	18.4-30
Case-IH MXU115/125/130/135 Cab/2&4wd (Cable/Fender Tank)	02981137	10.00-16	12.4-24	18.4-34
Case-IH MXU115/125/130/135 Cab/2&4wd (Joystick/Fender Tank)	02982226	10.00-16	12.4-24	18.4-34
Case-IH MXU115/125/130/135 ROPS/2&4wd (Cable/Fender Tank)	02984650	10.00-16	12.4-24	18.4-34
John Deere				
JD 5083E/5093E/5101E Cab/4wd (MY2011- Prior- New Rail Design- Joystick Control/Fender Tank)- **17'-20' Booms Only**	TBA	N/A	12.4-24	18.4-30
JD 5083E/5093E/5101E Cab/4wd (MY2012- New Rail Design- Joystick Control/Fender Tank)- **17'-20' Booms Only**	02991936	N/A	12.4-24	18.4-30
JD 5085/5095/5105M- Series Cab 2wd (MY2012- New Rail Design- Cable Control/Fender Tank)- **17'-20' Booms Only**	02991902	11.0L-15	N/A	16.9-30
JD 5085/5095/5105M- Series Cab 4wd (MY2012- New Rail Design- Cable Control/Fender Tank)- **17'-20' Booms Only**	02991900	N/A	12.4-24	16.9-30
JD 5085/5095/5105M- Series Cab 4wd (MY2012- New Rail Design- Joystick Control/Fender Tank)- **17'-20' Booms Only**	02991856	N/A	12.4-24	16.9-30
JD 5425/5525/5625 Cab/2&4wd (Cable/Fender Tank)	02983913	7.50-16	11.2-24	16.9-30
JD 5425/5525/5625 Cab/2&4wd (Joystick/Fender Tank)	02983243	7.50-16	11.2-24	16.9-30
JD 5603 Cab/4wd (Cable/Fender Tank)	02986167	N/A	12.4-24	18.4-30
JD 5603 Cab/4wd (Joystick/Fender Tank)	02986509	N/A	12.4-24	18.4-30
JD 6110/6210/6310/6405/6410 Cab 2wd (Cable Control/Fender Tank)	02973845	10.5-80/18	N/A	18.4-30
JD 6110/6210/6310/6405/6410 Cab 2wd (Joystick Control/Fender Tank)	02991250	10.5-80/18	N/A	18.4-30
JD 6110/6210/6310/6405/6410 Cab 4wd (Cable Control/Fender Tank)	02973849	N/A	12.4-24	18.4-30
JD 6215/6415 Cab/2&4wd (Cable/Mid-Mt Tank)	02979218	10.00-16	12.4-24	18.4-34
JD 6215/6415 Cab/2&4wd (Cable/Fender Tank)	02981500	10.00-16	12.4-24	18.4-34
JD 6215/6415 Cab/2&4wd (Joystick/Mid-Mt Tank)	02981036	10.00-16	12.4-24	18.4-34
JD 6215/6415 ROPS/2&4wd (Mid-Mt Tank)	02980731	10.00-16	12.4-24	18.4-34
JD 6120/6220/6320/6420 (Tier II) Cab/2&4wd (Cable/Mid-Mt Tank)	02979218	10.00-16	12.4-24	18.4-34
JD 6120/6220/6320/6420 (Tier II) Cab/2&4wd (Cable/Fender Tank)	02981500	10.00-16	12.4-24	18.4-34
JD 6120/6220/6320/6420 (Tier II) Cab/2&4wd (Joystick/Mid-Mt Tank)	02979290	10.00-16	12.4-24	18.4-34
JD 6120/6220/6320/6420 (Tier II) Cab/2&4wd (Joystick/Fender Tank)	02986353	10.00-16	12.4-24	18.4-34
JD 6120/6220/6320/6420 (Tier II) ROPS/2&4wd (Cable/Mid-Mt Tank)	02980731	10.00-16	12.4-24	18.4-34
JD 6230/6330/6430 "Mid-Spec" Cab/2&4wd (Cable/Fender Tank)	02986747	10.00-16	12.4-24	18.4-34
JD 6230/6330/6430 "Mid-Spec" Cab/2&4wd (Joystick/Fender Tank)	02986711	10.00-16	12.4-24	18.4-34
JD 6230/6330/6430 "Mid-Spec" ROPS 2wd (Fender Tank)	02987954	11L-16	N/A	18.4-34
JD 6230/6330/6430 "Mid-Spec" ROPS 4wd (Fender Tank)	02990042	N/A	12.4-24	18.4-34
JD 6230/6330/6430 "Premium" Cab/2&4wd (Cable/Fender Tank)	02986184	10.00-16	12.4-24	18.4-34
JD 6230/6330/6430 "Premium" Cab/2&4wd (Joystick/Fender Tank)	02985260	10.00-16	12.4-24	18.4-34
JD 6615/6715 Cab/2&4wd (Cable/Mid-Mt Tank)	02979858	11.00-16	13.6-24	18.4-34
JD 6615/6715 Cab/2&4wd (Joystick/Mid-Mt Tank)	02979925	11.00-16	13.6-24	18.4-34
JD 7220/7320/7420/7520 Cab/2&4wd (Cable/Mid-Mt Tank)	02979858	11.00-16	13.6-28	18.4-38
JD 7220/7320/7420/7520 Cab/2&4wd (Joystick/Mid-Mt Tank)	02979925	11.00-16	13.6-28	18.4-38

VERSA BOOM

17", 20", 23' Mount Kits

F.O.B. Seguin, TX

TRACTOR DESCRIPTION	MOUNT KIT	MAXIMUM TIRE SIZE		
		2WD Front	4WD Front	Rear
John Deere				
JD 7130/7230 "Mid Spec" Cab 2/4wd (w/55 gal. fuel tank/Cable/Fender Tank)	02987878	11.00-16	13.6-28	18.4-38
JD 7130/7230 "Mid Spec" Cab 2/4wd (w/55 gal. fuel tank/Joystick/Fender Tank)	02987277	11.00-16	13.6-28	18.4-38
JD 7130/7230 "Mid Spec" Cab 2/4wd (w/673 Loader Pkg/ 55 gal. fuel tank/Joystick/Fender Tank)	02991416	11.00-16	13.6-28	18.4-38
JD 7130/7230 "Mid Spec" ROPS 2/4wd (w/55 gal. fuel tank/Joystick/Fender Tank)	02987526	11.00-16	13.6-28	18.4-38
Massey Ferguson				
MF 2650/2660 Cab 4wd (Joystick Control/Fender Tank)	02991688	N/A	11.2-24	16.9-30
New Holland				
NH T5040/5050/5060/5070 Cab 2/4wd (Cable/Fender Tank)	02986803	10.00-16	12.4-24	18.4-30
NH T5040/5050/5060/5070 Cab 2/4wd (Joystick/Fender Tank)	02987108	10.00-16	12.4-24	18.4-30
NH T5040/5050/5060/5070 ROPS 2/4wd (Fender Tank)	02989928	10.00-16	12.4-24	18.4-30
NH T6010/6020/6040/6060 Cab/2wd (Cable/Fender Tank)	02985514	10.00-16	N/A	18.4-34
NH T6010/6020/6040/6060 Cab/2wd (Joystick/Fender Tank)	02988197	10.00-16	N/A	18.4-34
NH T6010/6020/6040/6060 Cab/4wd (Cable Control/Fender Tank)	02991887	N/A	12.4-24	18.4-30
NH T6010/6020/6040/6060 Cab/4wd (Joystick/Fender Tank)	02987018	N/A	12.4-24	18.4-30
NH T6010/6020 "Delta" ROPS/2wd (Fender Tank)	02986206	10.00-16	N/A	18.4-34
NH T6010/6020 Cab 2wd Models with Bar-style axles (Joystick Control/Fender Tank)	02990053	10.00-16	N/A	18.4-34
NH T6030/6050/6070 Cab/2&4wd (Flanged Wheel Axle/Cable/Fender Tank)	02981137	10.00-16	12.4-24	18.4-34
NH T6030/6050/6070 Cab/2&4wd (Rack & Pinion Axle/Cable/Fender Tank)	02991003	10.00-16	12.4-24	18.4-34
NH T6030/6050/6070 Cab/2&4wd (Joystick/Fender Tank)	02982226	10.00-16	12.4-24	18.4-34
NH T6030/6050/6070 Cab 2/4wd (Factory Loader Valve/Cable Control/Fender Tank)	02982832	10.00-16	12.4-24	18.4-34
NH T6030/6050/6070 Cab/2&4wd (540 PTO Pump/Joystick/Fender Tank)	02989499	10.00-16	12.4-24	18.4-34
NH T6030/6050 ROPS/2&4wd (Fender Tank)	02984650	10.00-16	12.4-24	18.4-34
NH TL80/90/100 Cab/2&4wd (Cable/Fender Tank)	02980259	10.00-16	12.4-24	18.4-30
NH TL80A/90A/100A Cab/2&4wd (Cable/Fender Tank)	02982098	10.00-16	12.4-24	18.4-30
NH TL80A/90A/100A Cab/2&4wd (Joystick/Fender Tank)	02984094	10.00-16	12.4-24	18.4-30
NH TL80A/90A/100A ROPS/2&4wd (Fender Tank)	02985822	10.00-16	12.4-24	18.4-30
NH TS100A/110A Cab/2wd (Cable/Fender Tank)	02982228	10.00-16	N/A	18.4-34
NH TS100A/110A Cab/2wd (Joystick/Fender Tank)	02981898	10.00-16	N/A	18.4-34
NH TS100A/110A Cab/4wd (Cable/Fender Tank)	02982809	N/A	12.4-24	18.4-30
NH TS115A/125A/130A/135A Cab/2&4wd (Cable/Fender Tank)	02981137	10.00-16	12.4-24	18.4-30
NH TS115A/125A/130A/135A Cab/2&4wd (Joystick/Fender Tank)	02982226	10.00-16	12.4-24	18.4-30
NH T6030/6050/6070 Cab 2/4wd (Factory Loader Valve/Cable Control/Fender Tank)	02982832	10.00-16	12.4-24	18.4-34
NH TS115A/125A/130A/135A Cab/2&4wd (540 PTO Pump/Joystick/Fender Tank)	02989499	10.00-16	12.4-24	18.4-34
NH TS115/125/130/135- A Series Cab 2/4wd (Factory Loader Valve/Joystick/Fender Tank)	02982832	10.00-16	12.4-24	18.4-34
NH TS115A/125A/130A/135A ROPS/2&4wd (Fender Tank)	02984650	10.00-16	12.4-24	18.4-34
NH TS6020/6030 Cab/2wd (Cable/Fender Tank)	02991179	10.00-16	N/A	18.4-34
NH TS6020/6030 ROPS/2wd (Fender Tank)	02989952	10.00-16	N/A	18.4-34

OTHER SPECIFICATIONS

(1) Always use the maximum tire size for favorable ground clearance.
(2) Tractors should not be ordered with armrest-integrated controls.
(3) Tractors must be equipped with flanged rear rims unless otherwise noted.
(4) Right handrail removal may be necessary for boom transport clearance.
(5) John Deere tractors must include a standard through-hood exhaust.
(6) Case-New Holland mount kits include an exhaust relocation feature.
(7) Case-IH JX-U & Farmall U and New Holland TL-A & T5000 series tractors require a smaller replacement battery which is not included. We recommend using Exide® #34R-84N.

VERSA PRO

21'8" Flail Mower

F.O.B. Seguin, TX

BASE UNIT SPECIFICATIONS

- 21'8" Overall Cutting Width
- 3/8" Box Fully Welded Frame
- 19-Gallon Reservoir with 10 Micron Filtration
- Tandem Piston Pumps Rated @ 48 GPM @ 3800 PSI
- Standard (1) year limited parts and labor warranty

WING MOWER SPECIFICATIONS

- 88" Cutting Width
- Two 10-Gauge Unitized Cutter Housings
- 1/2" Inboard & 5/16" Outboard Side Plates
- Replaceable Skid Shoes
- 4-1/2" x 5/16" Wall Cuttershaft
- 1-5/16" Bore Greaseable, Self-aligning Cuttershaft Bearings
- 53 HP Motor
- Belt Drive From Motor To Cuttershaft with Automatic Spring Tension
- 6" Adjustable Rear Roller
- 1/2" to 6" Cutting Height
- Available in Fine or Coarse-Cut
- Front and Rear Safety Deflectors
- Automatic Cut-Off Switches
- Wing Cylinder Capable of 45 degrees Down & 90° Up

FRONT MOWER SPECS

- 96" Cutting Width
- 10-Gauge Unitized Cutter Housing
- 5/16" Side Plates
- 4-1/2" x 5/16" Wall Cuttershaft
- 1-5/16" Bore Greaseable, Self-aligning Cuttershaft Bearings
- 60 HP Gearbox
- 6" Adjustable Rear Roller
- 1/2" to 6" Cutting Height
- Available in Fine or Coarse-Cut
- Front and Rear Safety Deflectors
- Belt Drive From Gearbox To Cuttershaft with Automatic Spring Tension

PRODUCT ORDER CODE	DESCRIPTION	APPRX. WEIGHT		LIST PRICE
VERSA PRO FLAIL BASE UNIT *(One Choice Required)*				
04903031	21'8" Versa Pro Flail, Fine-Cut Knives, Rev Rot, NH TV140	3324		58,067
04903026	21'8" Versa Pro Flail, Coarse-Cut Knives, NH TV140	3263		58,729
04903027	21'8" Versa Pro Flail, Fine-Cut w/Ring Knives, NH TV140	3278		58,972
04903028	21'8" Versa Pro Flail, Extreme Service Knives, NH TV140	3269		58,893
04903030	21'8" Versa Pro Flail, Fine-Cut Knives, NH TV140	3324		58,067
OPTIONS				
803350	Additional Operators and Parts Manuals			54
02963046	Mounting Labor & Oil			4,273
02791800VP	Special Mower Paint (02791800)			1,274
00889899VP	Additional 12 Month Warranty (00889899)			4,014

ALAMO® INDUSTRIAL

BUILT SHARPER®

1502 East Walnut St.
Seguin, TX 78155

Sales & Marketing
800-882-5762 830-379-0864 fax
support@alamo-industrial.com

Warranty Registration/Claims
www.alamoparts.com

Return Authorizations
Online Part Orders
Technical Information
www.alamoparts.com
800-356-6286 800-322-5041 fax

www.alamo-industrial.com

MEMBER OF THE ALAMO GROUP
ALWAYS ON THE CUTTING EDGE®

ALAMO® INDUSTRIAL

BUILT SHARPER®

WHOLEGOODS PRICING

NJPA

National Joint Powers Alliance

RFP #070313

Hydro Select Line

Effective February 15, 2013

Hydro Select Line Price Book

Table of Contents

Falcon Hydraulic Rotary	This Series Designated for Grounds Maintenance Contract (RFP# 070313)
Dual Wing Interstater	This Series Designated for Grounds Maintenance Contract (RFP# 070313)
Dual Wing Interstater- Mount Kits	This Series Designated for Grounds Maintenance Contract (RFP# 070313)
Right Hand Interstater	This Series Designated for Grounds Maintenance Contract (RFP# 070313)
Right Hand Interstater- Mount Kits	This Series Designated for Grounds Maintenance Contract (RFP# 070313)
88" Rear Interstater Flail Mowers	This Series Designated for Grounds Maintenance Contract (RFP# 070313)
96" Rear Interstater Flail Mowers	This Series Designated for Grounds Maintenance Contract (RFP# 070313)
Versa Mower	This Series Designated for Grounds Maintenance Contract (RFP# 070313)
Versa Mower- Mount Kits	This Series Designated for Grounds Maintenance Contract (RFP# 070313)
Traxx RF	This Series Designated for Grounds Maintenance Contract (RFP# 070313)
" Turn Key" Tractor Specs	Select Models Designated for Grounds Maintenance Contract (RFP# 070313)
Axtreme2 Boom	
Axtreme2 Boom- Mount Kits	
Machete2 Boom	
Machete2 Boom- Mount Kits	
Machete1 Front Mount Boom	
Maverick Boom	
Maverick Boom- Mount Kits	
Rear Mount Boom	
Samurai Boom	
Samurai Boom- Mount Kits	
Versa Boom	
Versa Boom- Mount Kits	
Versa Pro- Flail Mowers	

FALCON HYDRAULIC ROTARY

Flex- Wing Mower

F.O.B. Seguin, TX

STANDARD SPECIFICATIONS

- 540 PTO
- Available In 10' or 15' Cutting Width
- Minimum Tractor Requirement: 75 PTO hp
- 1/4" x 10-1/2" Bolt-On Side Skirts
- 3 Rear Remotes Required on Tractor For Proper Operation
- 35-Gallon Reservoir with Dual Filtration
- Wing Motor Cutoff - standard
- 63-HP Center Motor, 58-HP wing motor
- 10' Model includes LH- Counterweight Weldment- Concrete Fill not Included
- Standard (1) year limited parts and labor warranty.
- Double Row Chainguards
- Hydraulically Folding Wings
- Pan Assembly
- Updraft Blades
- Replaceable Skid Shoes
- Safety Tow Chain
- Parking Jack
- Easy Clean Top Deck
- Clevis Hitch
- Deck Rings - standard
- Dual Level Lift Rods

PRODUCT ORDER CODE	DESCRIPTION	APPRX. WEIGHT		LIST PRICE
	Base Unit *(One Choice Required)*			
04532210	Falcon 10', 540 rpm, Pan w/Deck Rings			26,238
04522715	Falcon 15', 540 rpm, Pan w/Deck Rings	6,400		31,998
	NOTE: TRACTOR MUST BE EQUIPPED WITH 3 REAR REMOTES FOR PROPER OPERATION			
	Wheel & Tire Options *(One Choice Required)*			
00770532	(Five) Implement Tires & Wheels (6.70-15 / 6 ply)	200		959
00770542	(Five) Recapped Airplane Tires (22 ply)	390		1,640
00770527	(Five) 15" Wheels (Wheels Only)	90		240
00770522	(Five) Laminated Tires & Wheels	375		887
02986580	(Five) Foam Filled Used Airplane Tire & Wheel (Standard Choice For 10 Ft. Models)	375		1,182
00770533	(Six) Implement Tires & Wheels (6.70-15 / 6 ply)	240		1,151
00770543	(Six) Recapped Airplane Tires (22 ply)	468		1,968
00770528	(Six) 15" Wheels (Wheels Only)	108		287
00770523	(Six) Laminated Tires & Wheels	450		1,063
02986581	(Six) Foam Filled Used Airplane Tire & Wheel (Standard Choice for 15 Ft. Models)	450		1,418
	Mount Kits *(One Choice Required)*			
02985210	Case-IH JX-U Series			N/C
02981883	Case-IH MXU & Maxxum Series			N/C
02983169	John Deere 5425/5525/5603/5625			N/C
02991047	John Deere 6000/6010 Series			N/C
00765452	John Deere 6020/6030/7020/7030 Series			N/C
02991275	Kubota M8540/M9540			N/C
02985210	New Holland TL-A Series			N/C
02991409	New Holland T5000 Series			N/C
00751562	New Holland TS90/100/110			N/C
02981883	New Holland TS-A & T6000 Series			N/C
00751565	Universal (Modification/Fabrication Req'd at the Dealer/Customer's Expense)			N/C

FALCON HYDRAULIC ROTARY

Flex- Wing Mower

F.O.B. Seguin, TX

Additional Options				
02985378	Additional Operators and Parts Manuals			51
00774803	Falcon 15 Auxiliary Spindle Kit for Dual Wheels On Both Wings (Requires 2 Additional Tires and Wheels)	45		474
00774802	Falcon 10 Auxiliary Spindle Kit for Dual Wheels On Wing (Requires 1 Additional Tire and Wheel)	24		276
Single Wheel and Tires For Spindle Kits Above				
00786014	27" Foam-Filled Used Airplane Tire & Wheel (Standard Choice Wheel and Tire)	75 each		294
00025200	Laminated Tire & Wheel	75 each		146
00749698	Implement Tire & Wheel	40 each		232
00771461	Used Airplane Tire & Wheel	75 each		248
02991066	Asy, Winch & Stand - Falcon 10/15	34		662
00769178	Captive Ball Hitch (2 5/16" Ball)	50		414
00773869	Pintle Hitch Kit (Requires Tractor Drawbar Modification)	50		840
00756846	Falcon 10: Concrete Filler for Weight Box (706 lbs.)	706		405
00755234	Stroke Control Segments	3		34
02991206	Fan Reverser Kit- Standard Equipment on units after 09/01/2012			526
02791800F1	Special Mower Paint (02791800)			841
00889899F3	Additional 12 Month Warranty (00889899)			4014

INTERSTATER DUAL-WING

18'5", 20'9" Flail Mower

F.O.B. Seguin, TX

BASE UNIT SPECIFICATIONS

- 18'5", or 20'9" Overall Cutting Widths
- Full-Length Welded Tubular Frame with Transport Lock
- 19-Gallon Reservoir with 12 Micron Filtration
- Tandem Piston Pumps Rated @ 48 GPM @ 3800 PSI
- 4-Spool Valve with Detent Position
- Standard (1) year limited parts and labor warranty

WING MOWER SPECIFICATIONS

- 62", 74", or 88" Cutting Widths
- 1/2" Inboard & 5/16" Outboard Side Plates
- Replaceable Skid Shoes
- 4-1/2" x 5/16" Wall Cuttershaft
- 1-5/16" Bore Greaseable, Self-aligning Cuttershaft Bearings
- 53 HP Piston Motor
- Belt Drive From Motor To Cuttershaft with Automatic Spring Tension
- 6" Adjustable Rear Roller
- 1/2" to 6" Cutting Height
- Available in Fine or Coarse-Cut
- Front and Rear Safety Deflectors
- Automatic Cut-Off Switch
- Lift Cylinder Capable of 14" Vertical Lift
- Tilt Cylinder Capable of 45° Down & 90° Up
- 10-Gauge Unitized Cutter Housing

REAR MOWER SPECIFICATIONS

- 88" or 96" Cutting Width (Depending on trctr mnt. kit)
- 10-Gauge Unitized Cutter Housing
- 5/16" Side Plates
- CAT I or CAT II Three-Point Hitch
- 4-1/2" x 5/16" Wall Cuttershaft
- 1-5/16" Bore Greaseable, Self-aligning Cuttershaft Bearings
- 60 HP Gearbox
- 6" Adjustable Rear Roller
- 1/2" to 6" Cutting Height
- Available in Fine or Coarse-Cut
- Torque Limiter Clutch
- Front and Rear Safety Deflectors
- CAT 4 Driveline
- Belt Drive From Gearbox To Cuttershaft with Automatic Spring Tension

PRODUCT ORDER CODE	DESCRIPTION	APPRX. WEIGHT		LIST PRICE
INTERSTATER BASE UNIT *(One Choice Required)*				
988030	18'5" Fine-Cut	4560		43,645
988029	18'5" Coarse-Cut (3 oz. Knives)	4570		43,588
988032	18'5" Extreme Service (4 oz. Knives)	4574		43,910
988034	20'9" Fine-Cut	4611		44,332
988033	20'9" Coarse-Cut (3 oz. Knives)	4620		44,276
988036	20'9" Extreme Service (4 oz. Knives)	4624		44,595
MOUNT KIT *(One Choice Required)* *See Mount Kit Page for Descriptions & Part Numbers*				
OPTIONS				
803213	Additional Operators and Parts Manual			52
ALL INTERSTATERS PURCHASED FOR INSTALLATION ON 4WD TRACTORS MUST INCLUDE CLIPPED FOOTGUARDS ON ORDER				
107520	74" Left-Clipped Foot Guard	37		331
107519	74" Right-Clipped Foot Guard	37		359
107525	88" Left-Clipped Foot Guard	42		430
107524	88" Right-Clipped Foot Guard	42		430
02972480	Left-Wing Remote Positioning System	65		2,915
803399	Mounting Labor & Oil			7,052
02791800DW	Special Mower Paint (02791800)			1,237
02968967	Special Tractor Paint			5,537
00889899DW	Additional 12 Month Warranty (00889899)			4,014

DUAL-WING INTERSTATER

18'5", 20'9" MOUNT KIT OPTIONS

F.O.B. Seguin, TX

TRACTOR DESCRIPTION	MOUNT KIT	REAR OFFSET	MAXIMUM TIRE SIZE			LIST PRICE
			2WD Front	4WD Front	Rear	
Case IH						
Case-IH JX1080U/1090U/1100U Cab 2 & 4wd 2004-2006 (Dual Wing Model- 5" Offset Left & Right)* (27 gal repl fuel tank included)	02980423 02983400	96" Ctr	10.00-16	11.2-24	18.4-30	13,858
Case-IH JX1080U/1090U/1100U Rops 2wd 2004-2006 (Dual Wing Model- 5" Offset Left & Right)* (27 gal repl fuel tank included)	02980423 02983273	96" Ctr	10.00-16	N/A	18.4-30	13,858
Case-IH MXU100/110 Cab 2 & 4wd 2004-2006 (Dual Wing Model- 5" Offset Left & Right)* (51 gal repl fuel tank & exhaust pipe included)	02980935 02980823	96" Ctr	N/A	12.4-24	18.4-30	13,858
Case-IH MXU100/110 Rops 2 & 4wd 2004-2006 (Dual Wing Model- 5" Offset Left & Right)* (51 gal repl fuel tank & exhaust pipe included)	02980935 02980919	96" Ctr	N/A	12.4-24	18.4-30	13,858
Case-IH MXU115/125/130/135 Cab 2 & 4wd 2004-2006 (Dual Wing Model- 5" Offset Left & Right)* (51 gal repl fuel tank & exhaust pipe included)	02981078 02981009	96" Ctr	N/A	12.4-24	18.4-30	13,858
Case-IH MXU115/125/130/135 Cab/2&4wd 2004-2006 (Dual Wing Model- 5" Offset Left & Right/Using Tractor Hyd) (51 gal repl fuel tank & exhaust pipe included)	02981078 02981087	96" Ctr	N/A	12.4-24	18.4-30	13,858
Case-IH MXU115/125/130/135 Rops 2 & 4wd 2004-2006 (Dual Wing Model- 5" Offset Left & Right)* (51 gal repl fuel tank & exhaust pipe included)	02981078 02983720	96" Ctr	N/A	12.4-24	18.4-30	13,858
John Deere						
JD 5085-5100-5115 M- Series cab 4wd 2012-2013 (Dual Wing Model- 5" Offset Left & Right)*	02992041 02992036	96" Ctr	N/A	12.4-24	18.4-34	13,858
JD 5425/5525 Cab 4wd 2005-2008 (Dual Wing Model- 5" Offset Left & Right)*	02984649 02984646	96" Ctr	N/A	11.2-24	16.9-30	13,858
JD 5425/5525 Rops 2wd w/ Straddle Platform 2005-2008 (Dual Wing Model- 5" Offset Left & Right)*	02983067 02982994	96" Ctr	7.50-16	N/A	16.9-30	13,858
JD 6615/6715 Rops 2wd 2003-2005 (Dual Wing Model- 5" Offset Left & Right)*	02981706 02983950	96" OL 5"	10.00-16	N/A	18.4-38	13,858
JD 6120/6220/6320/6420 Cab 4wd 2002-2007 (Dual Wing Model- 5" Offset Left & Right)*	108776 02979604	96" Ctr	N/A	12.4-24	18.4-30	13,858
JD 6120/6220/6320/6420 Rops 2 & 4wd 2002-2007 (Dual Wing Model- 5" Offset Left & Right)*	108776 02979815	96" Ctr	10.00-16	12.4-24	18.4-30	13,858
JD 6330/6430 "Mid-Spec" Cab 4wd 2007-2012 (Dual Wing Model- 5" Offset Left & Right)*	02985892 02985893	96" Ctr	N/A	13.6-24	18.4-38	13,858
JD 6330/6430 "Mid-Spec" Cab 2wd 2007-2012 (Dual Wing Model- 5" Offset Left & Right)*	108776 02986889	96" Ctr	10.00-16	N/A	18.4-34	13,858
JD 6330/6430 "Mid-Spec" ROPS 4wd 2007-2012 (Dual Wing Model- 5" Offset Left & Right)*	108776 02988706	96" Ctr	N/A	12.4-24	18.4-34	13,858

Note that ALL part numbers listed must be included with your order.

DUAL-WING INTERSTATER

18'5", 20'9" MOUNT KIT OPTIONS

F.O.B. Seguin, TX

TRACTOR DESCRIPTION	MOUNT KIT	REAR OFFSET	MAXIMUM TIRE SIZE			LIST PRICE
			2WD Front	4WD Front	Rear	
John Deere						
JD 7130/7230 "Mid-Spec" Cab 4wd 2007-2012 (Dual Wing Model- 10" Offset Left)*	02981706 02988897	96" Ctr	N/A	13.6-28	18.4-38	13,858
JD 7130/7230 "Mid-Spec" Cab 2wd 2007-2012 (Dual Wing Model- 5" Offset Left)*	02991026 02988897	96" Ctr	N/A	13.6-28	18.4-38	13,858
New Holland						
NH T5040/5050/5060/5070 Cab 2 & 4wd 2008-2012 (Dual Wing Model- 5" Offset Left & Right)* (27 gal repl fuel tank included)	02980423 02986612	96" Ctr	10.00-16	11.2-24	18.4-30	13,858
NH T5040/5050/5060/5070 Rops 2wd 2008-2012 (Dual Wing Model- 5" Offset Left & Right) (27 gal repl fuel tank included)	02980423 02987792	96" Ctr	10.00-16	N/A	18.4-30	13,858
NH T6010/6020/6040/6060 Cab 2wd 2008-2012 (Dual Wing Model- 5" Offset Left & Right) (51 gal repl fuel tank & exhaust pipe included)	02980935 02986403	96" Ctr	10.00-16	N/A	18.4-30	13,858
NH T6010/6020/6040/6060 Cab 4wd 2008-2012 (Dual Wing Model- 5" Offset Left & Right/Using Tractor Hydraulics) (51 gal repl fuel tank & exhaust pipe included)	02980935 02988759	96" Ctr	N/A	14.9-24	18.4-34	13,858
NH T6010/6020/6040/6060 Cab 4wd 2008-2012 (Dual Wing Model- 5" Offset Left & Right) (51 gal repl fuel tank & exhaust pipe included)	02987990 02987818	96" Ctr	N/A	14.9-24	18.4-34	13,858
NH T6030/6050 Cab 2wd 2008-2012 (Dual Wing Model- 5" Offset Left & Right)* (51 gal repl fuel tank & exhaust pipe included)	02981078 02986365	96" Ctr	11.00-16	N/A	18.4-30	13,858
NH T6030/6050 Cab 4wd 2008-2012 (Dual Wing Model- 5" Offset Left & Right)* (51 gal repl fuel tank & exhaust pipe included)	02981078 02987119	96" Ctr	N/A	14.9-24	18.4-34	13,858
NH T6030/6050 Cab 4wd 2008-2012 w/ Large Tires (Dual Wing Model- 5" Offset Left & Right)* (51 gal repl fuel tank & exhaust pipe included)	02991113 02991115	96" Ctr	N/A	14.9-28	18.4-38	13,858
NH TB100/110 Rops 2wd 2005-2012 (Dual Wing Model- 5" Offset Left & Right)*	02980834 02980178	96" Ctr	N/A	12.4-24	18.4-30	13,858
NH TL80/90/100 Cab 2wd 2004-2007 (Dual Wing Model- 5" Offset Left & Right)* (27 gal repl fuel tank included)	02980423 02981017	96" Ctr	10.00-16	N/A	18.4-30	13,858
NH TL80/90/100 ROPS 2wd 2004-2007 (Dual Wing Model- 5" Offset Left & Right)* (27 gal repl fuel tank included)	02980423 02980333	96" Ctr	10.00-16	N/A	18.4-30	13,858
NH TL80A/90A/100A Cab 2 & 4wd 2004-2007 (Dual Wing Model- 5" Offset Left & Right)* (27 gal repl fuel tank included)	02980423 02983400	96" Ctr	10.00-16	11.2-24	18.4-30	13,858
NH TL80A/90A/100A ROPS 2wd 2004-2007 (Dual Wing Model- 5" Offset Left & Right) (27 gal repl fuel tank included)	02980423 02983273	96" Ctr	10.00-16	N/A	18.4-30	13,858
NH TM115/125/135/150 Cab 2wd 2000-2002 (Dual Wing Model- 10" Offset Left)*	02978837 02978834	96' OL 5"	11.00-16	N/A	18.4-34	13,858
NH TM120/130/140/155 Cab 2wd 2002-2007 (Dual Wing Model- 10" Offset Left)*	02978837 02979781	96' OL 5"	11.00-16	N/A	18.4-34	13,858

Note that ALL part numbers listed must be included with your order.

DUAL-WING INTERSTATER

18'5", 20'9" MOUNT KIT OPTIONS

F.O.B. Seguin, TX

TRACTOR DESCRIPTION	MOUNT KIT	REAR OFFSET	MAXIMUM TIRE SIZE 2WD Front	4WD Front	Rear	LIST PRICE
New Holland						
NH TS90/100/110 Cab 4wd 1999-2003 (Dual Wing Model- No Offset)* (35.5 gal repl fuel tank included)	108415 704410	96" Ctr	N/A	12.4-24	18.4-30	13,858
NH TS90/100/110 Rops 2wd w/ Flat Platfrom 1999-2003 (Dual Wing Model- 10" Offset Left)* (35.5 gal repl fuel tank included)	108400 704401	96' OL 5"	10.00-16	N/A	18.4-30	13,858
NH TS90/100/110 Rops 4wd w/ Flat Platfrom 1999-2003 (Dual Wing Model- No Offset)* (35.5 gal repl fuel tank included)	108415 704484	96' OL 5"	N/A	12.4-24	18.4-30	13,858
NH TS100A/110A Cab 2 & 4wd 2003-2006 (Dual Wing Model- 5" Offset Left & Right)* (51 gal repl fuel tank & exhaust pipe included)	02980935 02980823	96" Ctr	N/A	12.4-24	18.4-30	13,858
NH TS100A/110A Rops 2 & 4wd 2003-2006 (Dual Wing Model- 5" Offset Left & Right)* (51 gal repl fuel tank & exhaust pipe included)	02980935 02980919	96" Ctr	N/A	12.4-24	18.4-30	13,858
NH TS115A/125A/130A/135A Cab/2&4wd 2003-2006 (Dual Wing Model- 5" Offset Left & Right)* (51 gal repl fuel tank & exhaust pipe included)	02981078 02981009	96" Ctr	N/A	12.4-24	18.4-30	13,858
NH TS115A/125A/130A/135A Cab 2 & 4wd 2003-2006 (Dual Wing Model- 5" Offset Left & Right/Using Tractor Hyd)* (51 gal repl fuel tank & exhaust pipe included) (Tractor must have four rear remotes)	02981078 02981087	96" Ctr	N/A	12.4-24	18.4-30	13,858
NH TS115A/125A/130A/135A Rops 2 & 4wd 2003-2006 (Dual Wing Model- 5" Offset Left & Right)* (51 gal repl fuel tank & exhaust pipe included)	02981078 02983720	96" Ctr	10.00-16	12.4-24	18.4-30	13,858
NH TS6.110/TS6.115/TS6.120 Cab 2 & 4wd 2012-2013 (Dual Wing Model- 5" Offset Left & Right)	TBD	96" Ctr	10.00-16	12.4-24	18.4-30	13,858
NH TS6.125/TS6.140 Cab 2 & 4wd 2012-2013 (Dual Wing Model- 5" Offset Left & Right)	TBD	96" Ctr	10.00-16	12.4-24	18.4-30	13,858

Note that ALL part numbers listed must be included with your order.

RIGHT-HAND INTERSTATER

62", 74", 88" Flail Mowers

F.O.B. Seguin, TX

STANDARD SPECIFICATIONS

- 62", 74", or 88" Cutting Widths
- Full-Length Welded Tubular Frame with Transport Lock
- 19-Gallon Reservoir with 12 Micron Filtration
- Piston Pump Rated @ 24 GPM @ 3800 PSI
- 2-Spool Valve with Detent Position
- 1-5/16" Bore Greaseable, Self-aligning Cuttershaft Bearings
- Lift Cylinder Capable of 14" Vertical Lift
- Tilt Cylinder Capable of 45° Down & 90° Up
- 10-Gauge Unitized Cutter Housing
- 1/2" Inboard & 5/16" Outboard Side Plates
- Replaceable Skid Shoes
- 4-1/2" x 5/16" Wall Cuttershaft
- Automatic Cut-Off Switch
- 53 HP Piston Motor
- Belt Drive From Motor To Cuttershaft with Automatic Spring Tension
- 6" Adjustable Rear Roller
- 1/2" to 6" Cutting Height
- Available in Fine or Coarse-Cut
- Front and Rear Safety Deflectors
- Standard (1) year limited parts and labor warranty

PRODUCT ORDER CODE	DESCRIPTION	APPRX. WEIGHT		LIST PRICE
RIGHT HAND INTERSTATER BASE UNIT				
988002	62" Fine-Cut			19,730
988001	62" Coarse-Cut (3 oz. Knives)			19,701
988004	62" Extreme Service (4 oz. Knives)			19,840
988005	74" Coarse-Cut (3 oz. Knives)	1200		20,553
988008	74" Extreme Service (4 oz. Knives)	1205		20,693
988009	88" Coarse-Cut (3 oz. Knives)	1250		20,780
988012	88" Extreme Service (4 oz. Knives)	1255		20,915
OPTIONS				
803213	Additional Operators and Parts Manual			52
ALL INTERSTATERS PURCHASED FOR INSTALLATION ON 4WD TRACTORS MUST INCLUDE A CLIPPED FOOTGUARD ON ORDER				
107532	62" Right-Clipped Foot Guard	32		417
107519	74" Right-Clipped Foot Guard	37		359
107524	88" Right-Clipped Foot Guard	42		430
801022	Mounting Labor & Oil, CAB Tractor			4,337
02791800IR	Special Mower Paint (02791800)			797
02968967	Special Tractor Paint			5,537
00889899I1	Additional 12 Month Warranty (00889899)			4,014

RIGHT-HAND INTERSTATER

62", 74", 88" Mount Kit Options

F.O.B. Seguin, TX

TRACTOR DESCRIPTION	MOUNT KIT COMP BOX	REAR OFFSET	MAXIMUM TIRE SIZE 2WD Front	4WD Front	Rear	LIST PRICE
Case IH						
Case-IH C70/80/90/100- CX Series Rops 2wd w/ Utility Bolster 1998-2002 (RH-Single Wing- No Offset)	02977885 02977907	88" Ctr 96" Ctr	11L-16	N/A	16.9-30	$8,918
Case-IH Farmall 95C Cab 4wd 2008-2012 (RH-Single Wing- Offset 13.5")	02990821 02990822	88" Ctr 96" Ctr	N/A	11.2-20	16.9-30	$8,918
Case-IH 695/895 Cab 4wd 1991-1994 (RH-Single Wing- Centered)	106832 703735	88" Ctr 96" Ctr	N/A	7.5-18	18.4-30	$8,918
Case-IH JX1060C/1070C/1075C Cab 2wd 2004-2008 (RH-Single Wing- Offset 5")	108777 704548	88"OR 8.5" 96"OR 12.5"	9.5L-15	N/A	16.9-30	$8,918
Case-IH JX1060C/1070C/1075C Cab/2wd 2004-2008 (RH-Single Wing- Offset 5"/ Using Tractor Hydraulics)	108777 02980173	88"OR 8.5" 96"OR 12.5"	9.5L-15	N/A	16.9-30	$8,285
Case-IH JX1060C/1070C/1075C Cab 4wd 2004-2008 (RH-Single Wing- Offset 5")	02984334 02984335	88"OR 14.5" 96"OR 12.5"	N/A	11.2-20	14.9-28	$8,918
Case-IH JX1060C/1070C/1075C Rops 2wd 2004-2008 (RH-Single Wing- Offset 5")	108775 704546	88"OR 8.5" 96"OR 12.5"	11L-15	N/A	16.9-30	$8,918
Case-IH JX1060C/1070C/1075C ROPS/2wd 2004-2008 (RH-Single Wing- Offset 5"/ Using Tractor Hydraulics)	108775 02980457	88"OR 8.5" 96"OR 12.5"	11L-15	N/A	16.9-30	$8,285
Case-IH JX1080U/1090U/1100U Cab 2wd 2004-2008 (RH-Single Wing- Offset 5")	02983494 02983537	88"OR 8.5" 96" Ctr	11L-15	11.2-24	16.9-34	$8,918
Case-IH JX1080U/1090U/1100U Rops 2wd 2004-2008 (RH-Single Wing- Offset 5")	02980206 02983546	88"OR 8.5" 96" Ctr	10.00-16	N/A	16.9-34	$8,918
Case-IH MXU100/110 Cab 4wd 2004-2006 (RH-Single Wing- Offset 5")	02981068 02981075	88"OR 8.5" 96" Ctr	N/A	12.4-24	18.4-30	$8,918
Case-IH MXU100/110 Rops 4wd 2004-2006 (RH-Single Wing- Offset 5")*	02981068 02981072	88"OR 8.5" 96" Ctr	N/A	12.4-24	18.4-30	$8,918
Case-IH MXU115/125/130/135 Cab 4wd 2004-2006 (RH-Single Wing- Offset 5")*	02982986 02983000	88"OR 8.5" 96" Ctr	N/A	12.4-24	18.4-30	$8,918
John Deere						
JD 5065/5075M- Series ROPS 2wd 2008-2011 (RH-Single Wing- Offset 5")	02988389 02988729	88"OR 8.5" 96" Ctr	11L-15	N/A	16.9-30	$8,918
JD 5065/5075M- Series Cab 2wd 2008-2011 (RH-Single Wing- Offset 5"/ Using Loader Joystick Control)	02988389 02988338	88"OR 8.5" 96" Ctr	11L-15	N/A	16.9-30	$8,918
JD 5083/5093/5101E- Series Cab 4wd Late 2011-2012 Tier III Ribbed Style Axle (RH-Single Wing- Offset 5")	02990386 02991126	88"OR 8.5" 96" Ctr	N/A	12.4-24	18.4-30	$8,918
JD 5083/5093/5101E- Series Cab 4wd 2008- Early 2011 Tier II Ribbed Style Axle (RH-Single Wing- Offset 5"/ Using Loader Joystick Control)	02990386 02990387	88"OR 8.5" 96" Ctr	N/A	12.4-24	18.4-30	$8,918
JD 5083/5093/5101E- Series Cab 4wd Late 2011-2012 Tier III Ribbed Style Axle (RH-Single Wing- Offset 5")	02990386 02991126	88"OR 8.5" 96" Ctr	N/A	12.4-24	18.4-30	$8,918
JD 5083/5093/5101E- Series Cab 4wd Late 2011-2012 Tier III Ribbed Style Axle (RH-Single Wing- Offset 5"/ Using Loader Joystick Control)	02990386 02990500	88"OR 8.5" 96" Ctr	N/A	12.4-24	18.4-30	$8,918
JD 5085/5095/5105M- Series Cab 4wd 2008-2011 (RH-Single Wing- Offset 5")	02991095 02991097	88"OR 8.5" 96" Ctr	N/A	11.2-24	16.9-30	$8,918
JD 5085/5095/5105M- Series Cab 4wd 2012-2013 (RH-Single Wing- Offset 5")	02992041 02992036	88"OR 8.5" 96" Ctr	N/A	11.2-24	16.9-30	$8,918
JD 5220/5320 Mid-Spec Cab 2wd 2002-2004 (RH-Single Wing- Offset 5")	02979602 02980121	88"OR 8.5" 96" Ctr	11L-15	N/A	16.9-30	$8,918
JD 5220/5320 Mid-Spec ROPS 2wd 2002-2004 (RH-Single Wing- Offset 5")	02979602 02980267	88"OR 8.5" 96" Ctr	11L-15	N/A	16.9-30	$8,918
JD 5225/5325 Cab/2wd 2005-2008 (RH Only/Aux Pump)	02983231 02983224	88"OR 8.5" 96" Ctr	6.50-16	N/A	13.6-28	$8,918

Note: Please list BOTH mount kit part numbers on your order.

RIGHT-HAND INTERSTATER

62", 74", 88" Mount Kit Options

F.O.B. Seguin, TX

TRACTOR DESCRIPTION	MOUNT KIT COMP BOX	REAR OFFSET	MAXIMUM TIRE SIZE 2WD Front	4WD Front	Rear	LIST PRICE
John Deere						
JD 5225/5325 Cab/4wd 2005-2008 (RH Only/Aux Pump)	02983848 02983858	88"OR 8.5" 96" Ctr	N/A	11.2-24	16.9-30	$8,918
JD 5420/5520 Cab 4wd 2002-2004 (RH-Single Wing- Offset 5")	02978138 02980203	88"OR 8.5" 96" Ctr	N/A	11.2-24	16.9-30	$8,918
JD 5420/5520 Rops 4wd 2002-2004 (RH-Single Wing- Offset 5")	02978138 02980632	88"OR 8.5" 96" Ctr	N/A	11.2-24	16.9-30	$8,918
JD 5425/5525 Cab 4wd 2005-2008 (RH-Single Wing- Offset 5")	02978138 02983640	88"OR 8.5" 96" Ctr	N/A	11.2-24	16.9-30	$8,918
JD 5425/5525 Cab 4wd 2005-2008 (RH-Single Wing- Offset 5"/ Using Tractor Hydraulics)	02978138 02984124	88"OR 8.5" 96" Ctr	N/A	11.2-24	16.9-30	$8,918
JD 5425/5525 Rops 2wd 2005-2008 (RH-Single Wing- Offset 5")	02985265 02985266	88"OR 8.5" 96" Ctr	7.50-16	N/A	16.9-30	$8,918
JD 6120/6220/6320/6420 Cab 4wd 2002-2007 (RH-Single Wing- Offset 5")	02978882 02978908	88"OR 8.5" 96" Ctr	N/A	12.4-24	18.4-30	$8,918
JD 6120/6220/6320/6420 Cab 4wd 2002-2007 (RH-Single Wing- Offset 5"/ Using Tractor Hydraulics)	02978882 02978879	88"OR 8.5" 96" Ctr	N/A	12.4-24	18.4-30	$8,918
JD 6215/6415 Cab/2&4wd (RH Only/Aux Pump)	02978882 02978908	88"OR 8.5" 96" Ctr	N/A	12.4-24	18.4-34	$8,918
JD 6215/6415 Cab/2&4wd (RH Only/Tractor Hyd) (2nd Remote Req'd)	02978882 02978879	88"OR 8.5" 96" Ctr	N/A	12.4-24	18.4-34	$8,285
JD 6330/6430 Mid-Spec & Premium Cab 4wd 2007-2012 (RH-Single Wing- Offset 5")	02978882 02990429	88"OR 8.5" 96" Ctr	N/A	13.6-28	18.4-34	$8,918
JD 6330/6430 Mid-Spec & Premium Cab 4wd 2007-2012 (RH-Single Wing- Offset 5"/ Using Tractor Hydraulics)	02978882 02989257	88"OR 8.5" 96" Ctr	N/A	13.6-28	18.4-34	$8,285
JD 6330/6430 Mid-Spec & Premium Cab 2wd 2007-2012 (RH-Single Wing- Offset 5")	02986192 02986193	88"OR 8.5" 96" Ctr	10.00-16	N/A	18.4-34	$8,918
JD 6330/6430 Mid-Spec & Premium Cab 2wd 2007-2012 (RH-Single Wing- Offset 5"/ Using Tractor Hydraulics)	02986192 02990077	88"OR 8.5" 96" Ctr	10.00-16	N/A	18.4-34	$8,285
JD 7130/7230 Mid-Spec Cab 4wd 2007-2012 (RH-Single Wing- Offset 5")	02989681 02989682	88"OR 8.5" 96" Ctr	N/A	13.6-28	18.4-34	$8,918
McCormick						
McCormick CX75/85/95/105 TII Models Cab 2wd 2003-2010 (RH-Single Wing- Offset 5")	02982467 02982079	88"OR 8.5" 96" Ctr	11L-16	N/A	16.9-30	$8,918
McCormick CX75/85/95/105 TII Models Cab 4wd 2003-2010 (RH-Single Wing- Offset 5")	02982218 02982079	88"OR 8.5" 96" Ctr	N/A	11.2-24	16.9-30	$8,918
Massey Ferguson						
MF 492 Cab 4wd 2004-2006 (RH-Single Wing- Offset 5")	02982944 02982973	88"OR 8.5" 96" Ctr	N/A	12.4-24	18.4-30	$8,918
MF 4335/4345/4355 Cab 4wd w/ Standard Hood 2001-2003 (RH-Single Wing- Offset 5")	02983792 02979222	88"OR 8.5" 96" Ctr	N/A	11.2-24	16.9-30	$8,918
MF 4335/4345/4355 Cab 4wd w/ Standard Hood 2001-2003 (RH-Single Wing- Offset 5"/ Using Tractor Hydraulics)	02983792 02989305	88"OR 8.5" 96" Ctr	N/A	11.2-24	16.9-30	$8,285
MF 5435/5445/5455 Cab 2wd w/ Standard Hood 2005-2008 (RH-Single Wing- Offset 5")	02981881 02981312	88"OR 8.5" 96" Ctr	7.50-16	N/A	16.9-28	$8,918

Note: Please list BOTH mount kit part numbers on your order.

RIGHT-HAND INTERSTATER

62", 74", 88" Mount Kit Options

F.O.B. Seguin, TX

TRACTOR DESCRIPTION	MOUNT KIT	REAR OFFSET	MAXIMUM TIRE SIZE 2WD Front	MAXIMUM TIRE SIZE 4WD Front	MAXIMUM TIRE SIZE Rear	LIST PRICE
New Holland						
NH T4020/4030 "Deluxe" Cab 2wd 2008-2012 (RH-Single Wing-Offset 5")	02987359 02986821	88"OR 8.5" 96"OR 12.5"	11L-15	N/A	16.9-30	$8,918
NH T4020/4030 "Deluxe" Cab 2wd 2008-2012 (RH-Single Wing-Offset 5"/ Using Tractor Hydraulics)	02987359 02986821	88"OR 8.5" 96"OR 12.5"	11L-15	N/A	16.9-30	$8,285
NH T4020/4030 "Deluxe" Cab 2wd 2008-2012 (RH-Single Wing-Offset 5"/ Using Tractor Loader Hydraulics)	02987359 02986821	88"OR 8.5" 96"OR 12.5"	11L-15	N/A	16.9-30	$8,918
NH T4020/4030 "Deluxe" Cab 4wd 2008-2012 (RH-Single Wing-Offset 5")	02987887 02987922	88"OR 14.5" 96"OR 12.5"	N/A	13.6-16	16.9-24	$8,918
NH T4020/4030 "Standard" Rops 2wd 2008-2012 (RH-Single Wing-Offset 5")	02987048 02987586	88"OR 8.5" 96"OR 12.5"	7.50-16	N/A	16.9-30	$8,918
NH T4040/4050 "Deluxe" Cab 2wd 2008-2012 (RH-Single Wing-Offset 5")	02986812 02986821	88"OR 8.5" 96"OR 12.5"	8.5L-15	N/A	16.9-30	$8,918
NH T4040/4050 "Deluxe" Cab 4wd 2008-2012 (RH-Single Wing-Offset 5")	02990821 02990822	88"OR 14.5" 96"OR 12.5"	N/A	11.2-20	16.9-30	$8,918
NH T5040/5050/5060/5070 Cab 2 & 4wd 2008-2012 (RH-Single Wing-Offset 5")	02983494 02986605	88"OR 8.5" 96" Ctr	10.00-16	11.2-24	18.4-30	$8,918
NH T5040/5050/5060/5070 Cab 2 & 4wd 2008-2012 (RH-Single Wing-Offset 5"/ Using Tractor Hydraulics)	02983494 02989472	88"OR 8.5" 96" Ctr	10.00-16	11.2-24	18.4-30	$8,285
NH T5040/5050/5060/5070 Rops 2wd 2008-2012 (RH-Single Wing-Offset 5")	02980206 02988018	88"OR 8.5" 96" Ctr	10.00-16	N/A	18.4-30	$8,918
NH T6030/6050/6070 Cab 2 & 4wd 2008-2012 (RH-Single Wing-Offset 5")	02982986 02986187	88"OR 8.5" 96" Ctr	11.00-16	14.9-24	18.4-34	$8,918
NH T6030/6050/6070 Cab 2 & 4wd 2008-2012 (RH-Single Wing-Offset 5"/ Using Tractor Hydraulics)	02982986 02989446	88"OR 8.5" 96" Ctr	11.00-16	14.9-24	18.4-34	$8,285
NH T6030/6050/6070 Rops 2wd 2008-2012 (RH-Single Wing- Offset 5")	02982986 02989451	88"OR 8.5" 96" Ctr	11.00-16	N/A	18.4-30	$8,918
NH T7030/7040/7050/7060 Cab 4wd 2008-2012 (RH-Single Wing-Offset 5")	02982986 02990749	88"OR 8.5" 96" Ctr	N/A	14.9-30	18.4-42	$8,918
NH TB100/110 Rops 2 & 4wd 2005-2011 (RH-Single Wing- Offset 5")	02980834 02980255	88"OR 8.5" 96" Ctr	N/A	12.4-24	18.4-30	$8,918
NH TL80/90/100 Cab 2wd 1999--2004 (RH-Single Wing- Offset 5")	02980206 02983635	88"OR 8.5" 96" Ctr	10.00-16	N/A	16.9-34	$8,918
NH TL80A/90A/100A Cab 2 & 4wd 2004-2007 (RH-Single Wing-Offset 5")	02983494 02983537	88"OR 8.5" 96" Ctr	10.00-16	11.2-24	16.9-34	$8,918
NH TL80A/90A/100A Rops 2 & 4wd 2004-2007 (RH-Single Wing-Offset 5")	02980206 02983546	88"OR 8.5" 96" Ctr	10.00-16	11.2-24	16.9-34	$8,918
NH TN55D/65D/70D/75D Cab 2wd 1994-2004 (RH-Single Wing-Offset 8.75")	108777 704548	88"OR 8.5" 96"OR 12.5"	9.5L-15	N/A	16.9-30	$8,918
NH TN55D/65D/70D/75D Cab 2wd 1998-2004 (RH-Single Wing-Offset 8.75"/ Using Tractor Hydraulics)	108777 02980173	88"OR 8.5" 96"OR 12.5"	9.5L-15	N/A	16.9-30	$8,285
NH TN55/65/70/75 Rops 2wd 1998-2004 (RH-Single Wing- Offset 8.75")	108775 704546	88"OR 8.5" 96"OR 12.5"	11L-15	N/A	16.9-30	$8,918
NH TN55/65/70/75 Rops 2wd 1999-2004 (RH-Single Wing- Offset 8.75"/ Using Tractor Hydraulics)	108775 02980457	88"OR 8.5" 96"OR 12.5"	11L-15	N/A	16.9-30	$8,285
NH TN60DA/70DA/75DA Cab/2wd 2004-2008 (RH-Single Wing-Offset 8.75")	108777 704548	88"OR 8.5" 96"OR 12.5"	9.5L-15	N/A	16.9-30	$8,918

Note: Please list BOTH mount kit part numbers on your order.

RIGHT-HAND INTERSTATER

62", 74", 88" Mount Kit Options

F.O.B. Seguin, TX

TRACTOR DESCRIPTION	MOUNT KIT	REAR OFFSET	MAXIMUM TIRE SIZE 2WD Front	4WD Front	Rear	LIST PRICE
New Holland *(Continued)*						
NH TN60DA/70DA/75DA Cab 2wd 2004-2008 (RH-Single Wing- Offset 8.75"/ Using Tractor Hydraulics)	108777 02980173	88"OR 8.5" 96"OR 12.5"	9.5L-15	N/A	16.9-30	$8,285
NH TN60DA/70DA/75DA Cab 4wd 2004-2008 (RH-Single Wing- Offset 13.78"/ Using Tractor Hydraulics)	02984334 02984335	88"OR14.5" 96"OR12.5"	N/A	11.2-20	14.9-28	$8,918
NH TN60A/70A/75A Rops 2wd 2004-2008 (RH-Single Wing- Offset 8.75")	108775 704546	88"OR 8.5" 96"OR 12.5"	11L-15	N/A	16.9-30	$8,918
NH TS90/100/110 Cab 2wd 1999-2003 (RH-Single Wing- No Offset)	108407 02983882	88"OR 8.5" 96"OR 12.5"	11L-15	N/A	16.9-30	$8,918
NH TS90/100/110 Rops 4wd w Flat Platform 1999-2003 (RH-Single Wing- No Offset)	108407 704488	88"OR 8.5" 96"OR 12.5"	N/A	12.4-24	18.4-30	$8,918
NH TS100A/110A Cab 2 & 4wd 2003-2006 (RH-Single Wing- Offset 5")	02981068 02981075	88"OR 8.5" 96" Ctr	10.00-16	12.4-24	18.4-30	$8,918
NH TS100A/110A Rops 2 & 4wd 2003-2006 (RH-Single Wing- Offset 5")	02981068 02981072	88"OR 8.5" 96" Ctr	10.00-16	12.4-24	18.4-30	$8,918
NH TS115A/125A/135A Cab 2 & 4wd 2003-2006 (RH-Single Wing- Offset 5")	02982986 02983000	88"OR 8.5" 96" Ctr	10.00-16	12.4-24	18.4-30	$8,918
NH TS115A/125A/135A Rops 2 & 4wd 2003-2006 (RH-Single Wing- Offset 5")	02981078 02983720	88"OR 8.5" 96" Ctr	10.00-16	12.4-24	18.4-30	$8,918
NH TS6.110/TS6.115/TS6.120 Cab 2 & 4wd 2012-2013 (RH Single Wing- 5" Offset Right)	TBD	96" Ctr	10.00-16	12.4-24	18.4-30	$8,918
NH TS6.125/TS6.140 Cab 2 & 4wd 2012-2013 (RH Single Wing- 5" Offset Right)	TBD	96" Ctr	10.00-16	12.4-24	18.4-30	$8,918

Note: Please list BOTH mount kit part numbers on your order.

REAR INTERSTATER

88" Flail Mower

F.O.B. Seguin, TX

STANDARD SPECIFICATIONS

- 88" Cutting Width
- 10-Gauge Unitized Cutter Housing
- 5/16" Side Plates
- CAT I or CAT II Three-Point Hitch
- 4-1/2" x 5/16" Wall Cuttershaft
- 1-5/16" Bore Greaseable, Self-aligning Cuttershaft Bearings
- Belt Drive From Gearbox to Cuttershaft with Automatic Spring Tension
- Standard (1) year limited parts and labor warranty
- 60 HP Gearbox
- 6" Adjustable Rear Roller
- 1/2" to 6" Cutting Height
- Available in Fine or Coarse-Cut
- Torque Limiter Clutch
- Front and Rear Safety Deflectors
- CAT 4 Driveline

PRODUCT ORDER CODE	DESCRIPTION	APPRX. WEIGHT		LIST PRICE
88" REAR INTERSTATER BASE UNIT *(One Choice Required)*				
SHD88CTRFC	88" SHD Center Mount (Fine Cut Knives)	1035		7,029
SHD88CTRCC	88" SHD Center Mount (Course Cut- 3oz Knives)	1035		7,029
SHD88CTRES	88" SHD Center Mount (Extreme Service- 4 oz Knives)	1035		7,270
SHD88080FC	88" SHD Offset 8.5" Right (Fine Cut Knives)	1035		7,029
SHD88080CC	88" SHD Offset 8.5" Right (Course Cut- 3oz Knives)	1035		7,029
SHD88080ES	88" SHD Offset 8.5" Right (Extreme Service- 4 oz Knives)	1035		7,270
SHD88145FC	88" SHD Offset 14.5" Right (Fine Cut Knives)	1035		7,029
SHD88145CC	88" SHD Offset 14.5" Right (Course Cut- 3oz Knives)	1035		7,029
SHD88145ES	88" SHD Offset 14.5" Right (Extreme Service- 4 oz Knives)	1035		7,270
SHD88205FC	88" SHD Offset 20.5" Right (Fine Cut Knives)	1035		7,270
SHD88205CC	88" SHD Offset 20.5" Right (Course Cut- 3oz Knives)	1035		7,029
SHD88265CC	88" SHD Offset 26.5" Right (Course Cut- 3oz Knives)	1035		7,029
SHD88265FC	88" SHD Offset 26.5" Right (Fine Cut Knives)	1035		7,029
SHD88265CC	88" SHD Offset 26.5" Right (Course Cut- 3oz Knives)	1035		7,029
SHD88265ES	88" SHD Offset 26.5" Right (Extreme Service- 4 oz Knives)	1035		7,270
SHD88CTRFCCB	88" SHD Center Mount w/ Caster Brackets (Fine Cut Knives)	1069		7,825
SHD88CTRCCCB	88" SHD Center Mount w/ Caster Brackets (Course Cut- 3oz Knives)	1069		7,825
SHD88CTRESCB	88" SHD Center Mount w/ Caster Brackets (Extreme Service- 4 oz Knives)	1069		8,066
SHD88080FCCB	88" SHD Offset 8.5" Right w/ Caster Brackets (Fine Cut Knives)	1069		7,825
SHD88080CCCB	88" SHD Offset 8.5" Right w/ Caster Brackets (Course Cut- 3oz Knives)	1069		7,825
SHD88080ESCB	88" SHD Offset 8.5" Right w/ Caster Brackets (Extreme Service- 4 oz Knives)	1069		8,066
SHD88145FCCB	88" SHD Offset 14.5" Right w/ Caster Brackets (Fine Cut Knives)	1069		7,825
SHD88145CCCB	88" SHD Offset 14.5" Right w/ Caster Brackets (Course Cut- 3oz Knives)	1069		7,825
SHD88145ESCB	88" SHD Offset 14.5" Right w/ Caster Brackets (Extreme Service- 4 oz Knives)	1069		8,066
SHD88205FCCB	88" SHD Offset 20.5" Right w/ Caster Brackets (Fine Cut Knives)	1069		7,825
SHD88205CCCB	88" SHD Offset 20.5" Right w/ Caster Brackets (Course Cut- 3oz Knives)	1069		7,825
SHD88205ESCB	88" SHD Offset 20.5" Right w/ Caster Brackets (Extreme Service- 4 oz Knives)	1069		8,066
SHD88265CCCB	88" SHD Offset 26.5" Right w/ Caster Brackets (Course Cut- 3oz Knives)	1069		7,825
SHD88265ESCB	88" SHD Offset 26.5" Right w/ Caster Brackets (Extreme Service- 4 oz Knives)	1069		8,066
OPTIONS				
803211	Additional Operators and Parts Manuals			54
701150	Lift Chains	7		100
801002	Special Mower Paint (Rear Unit Only)			585
00889899I2	Additional 12 Month Warranty (00889899)			4,014

REAR INTERSTATER

96" Flail Mower

F.O.B. Seguin, TX

STANDARD SPECIFICATIONS

- 96" Cutting Width
- 10-Gauge Unitized Cutter Housing
- 5/16" Side Plates
- CAT I or CAT II Three-Point Hitch
- 4-1/2" x 5/16" Wall Cuttershaft
- 1-5/16" Bore Greaseable, Self-aligning Cuttershaft Bearings
- Belt Drive From Gearbox to Cuttershaft with Automatic Spring Tension
- Standard (1) year limited parts and labor warranty
- 60 HP Gearbox
- 6" Adjustable Rear Roller
- 1/2" to 6" Cutting Height
- Available in Fine or Coarse-Cut
- Torque Limiter Clutch
- Front and Rear Safety Deflectors
- CAT 4 Driveline

PRODUCT ORDER CODE	DESCRIPTION	APPRX. WEIGHT		LIST PRICE
96" REAR INTERSTATER BASE UNIT *(One Choice Required)*				
SHD96CTRFC	96" SHD Center Mount (Fine Cut Knives)	1170		7,828
SHD96CTRCC	96" SHD Center Mount (Course Cut- 3 oz. knives)	1170		7,828
SHD96CTRES	96" SHD Center Mount (Extreme Service- 4 oz. knives)	1170		8,092
SHD96125FC	96" SHD Offset 12.5" Right (Fine Cut Knives)	1170		7,828
SHD96125CC	96" SHD Offset 12.5" Right (Course Cut 3 oz. knives)	1170		7,828
SHD96125ES	96" SHD Offset 12.5" Right (Extreme Service 4 oz. knives)	1170		8,092
SHD96185FC	96" SHD Offset 18.5" Right (Fine Cut Knives)	1170		7,828
SHD96185CC	96" SHD Offset 18.5" Right (Course Cut 3 oz. knives	1170		7,828
SHD96185ES	96" SHD Offset 18.5" Right (Extreme Service 4 oz. knives)	1170		8,092
SHD96245CC	96" SHD Offset 24.5" Right (Course Cut 3 oz. knives)	1170		7,828
SHD96245ES	96" SHD Offset 24.5" Right (Extreme Service 4 oz. knives)	1170		8,092
SHD96305CC	96" SHD Offset 30.5" Right (Course Cut 3 oz. knives)	1170		7,828
SHD96305ES	96" SHD Offset 30.5" Right (Extreme Service 4 oz. knives)	1170		8,092
SHD96CTRFCCB	96" SHD Center Mount w/ Caster Brackets (Fine Cut)	1249		8,356
SHD96CTRCCCB	96" SHD Center Mount w/ Caster Brackets (Course Cut 3 oz. knives)	1249		8,356
SHD96CTRESCB	96" SHD Center Mount w/ Caster Brackets (Extreme Service 4 oz. knives)	1249		8,620
SHD96185ESCB	96" SHD Offset 18.5" Right w/ Caster Brackets (Extreme Service- 4 oz. knives)	1249		8,620
SHD96245CCCB	96" SHD Offset 24.5" Right w/ Caster Brackets (Course Cut - 3 oz. knives)	1249		8,356
SHD96245ESCB	96" SHD Offset 24.5" Right w/ Caster Brackets (Extreme Service- 4 oz. knives)	1249		8,620
SHD96305CCCB	96" SHD Offset 30.5" Right w/ Caster Brackets (Course Cut- 3 oz. knives)	1249		8,356
SHD96305ESCB	96" SHD Offset 30.5" Right w/ Caster Brackets (Extreme Service- 4 oz. knives)	1249		8,620
CASTERS *(One Choice Required)*				
702193	360° Laminated Caster Wheel with Roller	154		1,616
OPTIONS				
803211	Additional Operators and Parts Manuals			54
701150	Lift Chains	7		100
801002	Special Mower Paint (Rear Unit Only)			585
00889899I2	Additional 12 Month Warranty (00889899)			4,014

VERSA MOWER

60", 72", 74" Mid-Mount Rotary/Flails

F.O.B. Seguin, TX

STANDARD SPECIFICATIONS

- Welded Steel Plate Frame Braced to the Front Bolster & Rear Axle
- 60-Gallon Hydraulic Reservoir with 12-Micron Filtration
- Lift Frame Capable of Tilting the Head 180°
- Lift Frame is Capable of Lifting the Head 17" Above & 6" Below Grade Level
- Exterior Boom Arm 5"x5"x1/4" Steel Tubing
- Stacked Hydraulic Pump Rated @ 51 GPM @ 2500 PSI
- 2-Spool, Open Center, Tapered Positive Metering Valve
- Tractor Req: 60 HP
- Cutting Capacity: 2" material

HEAD SPECIFICATIONS

- 60" Boom-Axe Head
- 1/4" Gauge Deck with 3/8" Side Skirts
- Channel Reinforcements on the Top Deck
- Spindle Mounting Plate is 1" at the Spindle
- 90 HP Gear Motor Directly Splined to the Spindle
- 4-1/2"x9" Hardened Spindle
- 1-1/4"x6" Blades, 360° Swing
- 360° Swinging Updraft Blades
- Full-Length Replaceable Skid Shoes
- Front & Rear Chain Guards
- Standard (1) year limited parts and labor warranty

PRODUCT ORDER CODE	DESCRIPTION	APPRX. WEIGHT		LIST PRICE
Versa Mower Base Unit *(One Choice Required)*				
04950004	VERSA Rotary Extreme Service Extension Arm-Rops	2,300		6,756
04950005	VERSA Rotary Extreme Service Extension Arm-Cab	2,300		6,756
04952004	VERSA Ditcher Extreme Service Extension Arm-Rops	2,300		7,395
04952005	VERSA Ditcher Extreme Service Extension Arm-Cab	2,300		7,395
04950010	VERSA Rotary Extreme Service Extension Arm-Cab-Tractor Hydraulics - Requires 2 open sets of Hydraulic Remotes	2,300		5,593
Breakaway Extension Arms Below Are Not For Use On 72" Rotary Models				
04950008	VERSA Rotary Breakaway Extension Arm-Rops	2,370		8,944
04950009	VERSA Rotary Breakaway Extension Arm-Cab	2,370		8,944
MOWER HEAD *(One Choice Required)*				
02964876	60" Rotary with Bar, Front & Rear Chain Guards	1,050		9,030
02977051	60" Rotary with Bar, Front & Rear Chain Guards (1/4" deck)	1,100		9,700
02964878	60" Rotary with Pan, Front & Rear Chain Guards	1,100		9,872
02975016	60" Rotary with Pan, Front & Rear Chain Guards (1/4" deck)	1,150		10,558
02964884	60" Breakaway Rotary with Bar, Front & Rear Chain Guards	1,050		9,724
02964886	60" Breakaway Rotary with Pan, Front & Rear Chain Guards	1,100		10,653
02964888	60" Rotary with Bar, Tail Wheel, Front & Rear Chain Guards	1,140		9,855
02964890	60" Rotary with Pan, Tail Wheel, Front & Rear Chain Guards	1,190		10,708
02967263	60" Deep Deck Rotary with Bar, Front & Rear Chain Guards (1/4" deck)	1,050		9,968
02967267	60" Deep Deck Rotary with Pan, Front & Rear Chain Guards (1/4" deck)	1,125		10,997
72" Rotary Models Below Are Not For Use On Breakaway Extension Arms				
02964880	72" Rotary with Bar, Front & Rear Chain Guards	1270		10,422
02964882	72" Rotary with Pan, Front & Rear Chain Guards	1320		11,191
02963836	60" Versa Flail, Belt Drive	740		12,963
02968968	60" Versa Flail, Belt Drive, Extreme-Duty Knife	734		12,761
02963837	74" Versa Flail, Belt Drive	840		13,280
02967639	74" Versa Flail, Belt Drive, Extreme-Duty Knife	834		13,281
02957866	Ditcher Head	600		13,219
OPTIONS *(Continued Next Page)*				
02897300	Additional Operators and Parts Manuals			54
02964900	Cable & Clamp Kit	5		35
02966070	Side Gauge Wheel Option (60" Deep-Deck VERSA Only)	75		590

VERSA MOWER

60", 72", 74" Mid-Mount Rotary/Flails

F.O.B. Seguin, TX

PRODUCT ORDER CODE	DESCRIPTION	APPRX. WEIGHT		LIST PRICE
	Options *(Continued)*			
02978378	Tilt Cylinder Kit - NH TS & 40 Series	15		766
02978383	Tilt Cylinder Kit - JD 6000,6010,6020 Series	15		483
02978391	Tilt Cylinder Kit - JD 7000, 7010 Series	15		484
02972609	Wheel Weight Kit-500 lbs.			1,266
02971789	Wheel Weight Kit-1300 lbs.			2,709
02976671	Additional 408 lbs. Kit for 1300 lbs. Wheel Weight			1,593
02976670	Additional 680 lbs. Kit for 1300 lbs. Wheel Weight			2,363
02983104	JD 5425/5525 Repl. Window (Incl. Molded Corner Window)			2,166
02982412	JD 6015 & 6020 Replacement Window Kit (Clear)			2,167
02985234	JD 7030 "Mid-Spec" Replacement Window Kit (Clear)			2,167
02982429	JD 7020 Repl. Window Kit (Tractors w/No RH Door)			2,167
02986182	JD 7030 "Prem" Window Kit (Clear) (Tractors w/No RH Door)			2,167
02983528	Case-IH JXU & NH TL-A Replacement Window Kit			2,167
02980888	Case-IH MXU & Maxxum Replacement Window Kit NH TS-A & T6000 Replacement Window Kit			2,167
02963045	Mounting Labor & Oil			5,830
02791800V6	Special Mower Paint (02791800)			821
02968967	Special Tractor Paint			5,537
00889899VM	Additional 12 Month Warranty (00889899)			4,014

VERSA MOWER

60", 72", 74" Mid-Mount Rotary/Flail Mount Kit Options

F.O.B. Seguin, TX

TRACTOR DESCRIPTION	MOUNT KIT	MAXIMUM TIRE SIZE			LIST PRICE
		2WD Front	4WD Front	Rear	
Case IH					
Case-IH Farmall 85U/95U/105U Cab/2&4wd (Fender Tank)	02986594	10.00-16	12.4-24	18.4-34	6,901
Case-IH Farmall 85U/95U/105U Cab/2&4wd (Tractor Hyd/Fender Tank)	02991132	10.00-16	12.4-24	18.4-34	6,361
Case-IH Farmall 85U/95U/105U ROPS/2&4wd (Fender Tank)	02986665	10.00-16	12.4-24	18.4-34	6,901
Case-IH JX1060C/1070C/1075C Cab/2&4wd (Fender Tank)	02983986	7.50-16	11.2-24	16.9-30	6,901
Case-IH JX1060C/1070C/1075C Cab/2&4wd (Tractor Hyd/Fender Tank)	02987283	7.50-16	11.2-24	16.9-30	6,361
Case-IH JX1060C/1070C/1075C ROPS/2wd (Mid-Mt Tank)	02977579	7.50-16	N/A	16.9-30	6,901
Case-IH JX1060C/1070C/1075C ROPS/4wd (Fender Tank)	02981057	N/A	11.2-24	16.9-30	6,901
Case-IH JX1080U/1090U/1100U Cab/2&4wd (Fender Tank)	02982265	10.00-16	12.4-24	18.4-30	6,901
Case-IH JX1080U/1090U/1100U Cab/2&4wd (Tractor Hyd/Fender Tank)	02985908	10.00-16	12.4-24	18.4-30	6,361
Case-IH JX1080U/1090U/1100U ROPS/2wd (Fender Tank)	02982253	10.00-16	N/A	18.4-30	6,901
Case-IH JX1080U/1090U/1100U ROPS/4wd (Fender Tank)	02982879	N/A	12.4-24	18.4-30	6,901
Case-IH Maxxum 110/110 Pro/120 Pro/130 Pro Cab/2wd (Fender Tank)	02989121	10.00-16	N/A	18.4-34	6,901
Case-IH Maxxum 110/110 Pro/120 Pro/130 Pro Cab/2wd (Tractor Hyd/Fender Tank)	02985615	10.00-16	N/A	18.4-34	6,361
Case-IH Maxxum 110/110 Pro/120 Pro/130 Pro Cab/4wd (Fender Tank)	02985927	N/A	12.4-24	18.4-30	6,361
Case-IH Maxxum 115/125/125 Pro/140 Pro Cab/2&4wd (Fender Tank)	02984316	10.00-16	12.4-24	18.4-34	6,901
Case-IH Maxxum 115/125/125 Pro/140 Pro Cab/2&4wd (Tractor Hyd/Fender Tank)	02990039	10.00-16	12.4-24	18.4-34	6,361
Case-IH Maxxum 115/125/125 Pro/140 Pro ROPS/2&4wd (Fender Tank)	02984870	10.00-16	12.4-24	18.4-34	6,901
Case-IH MXU100/110 Cab/2wd (Mid-Mt Tank)	02980734	10.00-16	N/A	18.4-34	6,901
Case-IH MXU100/110 Cab/2wd (Tractor Hyd/Mid-Mt Tank)	02980831	10.00-16	N/A	18.4-34	6,361
Case-IH MXU100/110 Cab/4wd (Fender Tank)	02981497	N/A	13.6-24	18.4-34	6,901
Case-IH MXU100/110 ROPS/2wd (Mid-Mt Tank)	02982461	10.00-16	N/A	18.4-34	6,901
Case-IH MXU115/125/130/135 Cab/2&4wd (Fender Tank)	02984316	10.00-16	12.4-24	18.4-34	6,901
Case-IH MXU115/125/130/135 Cab/2&4wd (Tractor Hyd/Fender Tank)	02990039	10.00-16	12.4-24	18.4-34	6,361
Case-IH MXU115/125/130/135 ROPS/2&4wd (Fender Tank)	02984870	10.00-16	12.4-24	18.4-34	6,901
Challenger					
Challenger MT445B/455B/465B Cab/2&4wd (Tier III Engine Only/Fender Tank)	02989829	10.00-16	14.9-24	18.4-34	6,901
John Deere					
JD 5065M/5075M Cab/2&4wd (Fender Tank)	02988300	7.50-16	11.2-24	16.9-30	6,901
JD 5065M/5075M Cab/2&4wd (Tractor Hyd/Fender Tank)	02988303	7.50-16	11.2-24	16.9-30	6,361
JD 5065M/5075M ROPS/2&4wd (DOOS & FOOS Platform/Fender Tank)	02990178	7.50-16	11.2-24	16.9-30	6,901
JD 5083E/5093E/5101E Limited Cab/4wd (Tapped Axles-Built Before 2011/Fender Tank)	02986435	N/A	12.4-24	18.4-30	6,901
JD 5083E/5093E/5101E Limited Cab/4wd (Tapped Axles-Built Before 2011/Loader Hyd/Fender Tank)	02986717	N/A	12.4-24	18.4-30	6,361
JD 5083E/5093E/5101E Limited Cab/4wd (Ribbed Axles-Built Before 2011/Fender Tank)	02990023	N/A	12.4-24	18.4-30	6,901
JD 5083E/5093E/5101E Limited Cab/4wd (Ribbed Axles-Built Before 2011/Tractor Hyd/Fender Tank)	02990098	N/A	12.4-24	18.4-30	6,361
JD 5083E/5093E/5101E Limited Cab/4wd (MY2011/Fender Tank)	02990965	N/A	12.4-24	18.4-30	6,901
JD 5083E/5093E/5101E Limited Cab/4wd (MY2011/Tractor Hyd/Fender Tank)	02991451	N/A	12.4-24	18.4-30	6,361
JD 5083E/5093E/5101E Limited Cab/4wd (MY2011/Loader Hyd/Fender Tank)	02991449	N/A	12.4-24	18.4-30	6,361
JD 5083E/5093E/5101E Limited Cab/4wd (MY2012/Fender Tank)	TBD	11L-15	11.2-24	16.9-30	6,901
JD 5083E/5093E/5101E Limited Cab/4wd (MY2012/Loader J-stick Control/AI Valve)	02992561	11L-15	11.2-24	16.9-30	6,901
JD 5085M/5095M/5105M Cab/2&4wd (MY2008-2011/Fender Tank)	02990965	11L-15	11.2-24	16.9-30	6,901
JD 5085M/5095M/5105M Cab 2/4wd (MY2012/Fender Tank)	02991889	11L-15	11.2-24	16.9-30	6,901
JD 5085M/5095M/5105M Cab 2/4wd (MY2012/Loader J-stick Control/AI Valve)	02991903	11L-15	11.2-24	16.9-30	6,901

OTHER SPECIFICATIONS

(1) Case-IH JX-U & Farmall U and New Holland TL-A, T4000 & T5000 series tractors require a smaller replacement battery which is not included. We recommend using Exide® #34R-84N.

VERSA MOWER

60", 72", 74" Mid-Mount Rotary/Flail Mount Kit Options

F.O.B. Seguin, TX

TRACTOR DESCRIPTION	MOUNT KIT	MAXIMUM TIRE SIZE			LIST PRICE
		2WD Front	4WD Front	Rear	
John Deere *(Continued)*					
JD 5225/5325 Cab/2&4wd (Fender Tank)	02984121	7.50-16	11.2-24	16.9-30	6,901
JD 5225/5325 ROPS/2wd (Fender Tank)	02988266	7.50-16	11.2-24	16.9-30	6,901
JD 5425/5525 Cab/2&4wd (Fender Tank)	02982838	7.50-16	11.2-24	16.9-30	6,901
JD 5425/5525/5625 Cab/2&4wd (Tractor Loader Valve Hyd/Fender Tank)	02982855	7.50-16	11.2-24	16.9-30	6,361
JD 5425/5525/5625 ROPS/2&4wd (Flat "IOOS" Platform/Fender Tank)	02982719	7.50-16	11.2-24	16.9-30	6,901
JD 5425/5525/5625 ROPS/2&4wd (Straddle Platform/Fender Tank)	02983600	7.50-16	11.2-24	16.9-30	6,901
JD 5603 Cab/4wd (Fender Tank)	02986435	N/A	12.4-24	18.4-30	6,901
JD 5603 Cab/4wd (Loader Hyd/Fender Tank)	02986717	N/A	12.4-24	18.4-30	6,361
JD 6100D/6115D/6130D/6140D Cab/2&4wd (540 PTO Pump/Fender Tank)	02988491	10.00-16	13.6-24	18.4-34	7,622
JD 6110/6210/6310/6405/6410 Cab 2wd (Fender Tank)	02973843	10.00-16	12.4-24	18.4-30	6,901
JD 6110/6210/6310/6405/6410 Cab 4wd (Fender Tank)	02973847	10.00-16	12.4-24	18.4-30	6,901
JD 6120/6220/6320/6420 (Tier II) CAB/2&4wd (Fender Tank)	02985096	10.00-16	12.4-24	18.4-30	6,901
JD 6120/6220/6320/6420 (Tier II) CAB/2wd (Tractor Hyd/Mid-Mt Tank)	02980756	10.00-16	N/A	18.4-34	6,361
JD 6120/6220/6320/6420 (Tier II) CAB/4wd (Tractor Hyd/Mid-Mt Tank)	02980768	N/A	12.4-24	18.4-34	6,361
JD 6120/6220/6320/6420 (Tier II) ROPS/2&4wd (Fender Tank)	02988531	10.00-16	12.4-24	18.4-30	6,901
JD 6120/6215/6220/6320/6415/6420 (Tier II) CAB 2wd (Frame Mounted Tank)	02978819	10.00-16	12.4-24	18.4-30	6,901
JD 6120/6215/6220/6320/6415/6420 (Tier II) Cab 4wd (Frame Mounted Tank)	02980105	10.00-16	12.4-24	18.4-30	6,901
JD 6120/6215/6220/6320/6415/6420 (Tier II) Rops 2/4wd (Frame Mounted Tank)	02979371	10.00-16	12.4-24	18.4-30	6,901
JD 6215/6415 Cab/2&4wd (Fender Tank)	02985096	10.00-16	12.4-24	18.4-30	6,901
JD 6215/6415 Cab/4wd (Tractor Hyd-2nd Remote Req'd/Mid-Mt Tank)	02980768	N/A	12.4-24	18.4-34	6,361
JD 6215/6415 Cab/4wd (Tractor Hyd-2nd Remote Req'd/Mid-Mt Tank)	02980768	N/A	12.4-24	18.4-34	6,361
JD 6230/6330/6430 "Mid-Spec" Cab/2&4wd (Tractor Hyd/Fender Tank)	02992019	10.00-16	12.4-24	18.4-34	6,901
JD 6230/6330/6430 "Mid-Spec" Cab/2&4wd (Fender Tank)	02985543	10.00-16	12.4-24	18.4-34	6,901
JD 6230/6330/6430 "Mid-Spec" Cab/2&4wd (Tractor Hyd/Fender Tank)	02992019	10.00-16	12.4-24	18.4-34	6,901
JD 6230/6330/6430 "Mid-Spec" ROPS/2&4wd (Fender Tank)	02987161	10.00-16	12.4-24	18.4-34	6,901
JD 6230/6330/6430 "Premium" Cab/2&4wd (Fender Tank)	02985543	10.00-16	12.4-24	18.4-34	6,901
JD 6230/6330/6430 "Premium" Cab/2&4wd (540 PTO Pump/Fender Tank)	02986699	10.00-16	12.4-24	18.4-34	7,622
JD 6615/6715 Cab/2wd (Mid-Mt Tank)	02982138	11.00-16	N/A	18.4-34	6,901
JD 6615/6715 Cab/4wd (Mid-Mt Tank)	02985103	N/A	13.6-28	18.4-38	6,901
JD 7220/7320/7420/7520 Cab/2wd (Mid-Mt Tank)	02982138	11.00-16	N/A	18.4-38	6,901
JD 7220/7320/7420/7520 Cab/4wd (Mid-Mt Tank)	02985103	N/A	13.6-28	18.4-38	6,901
JD 7130/7230 "Mid" Cab/2&4wd (4 or 6 cyld/55 gal. fuel tank/Fender Tank)	02988406	11.00-16	13.6-28	18.4-38	6,901
JD 7130/7230 "Mid" Cab/2&4wd w/JD673 Loader (4 or 6 cyld/55 gal. fuel tank/Fender Tank)	02991326	11.00-16	13.6-28	18.4-38	6,901
Kubota					
Kubota M96S/M108S Cab/2&4wd (Fender Tank)	02989855	10.00-16	13.6-24	18.4-34	6,901
Kubota M96S/M108S ROPS/2wd (Fender Tank)	02987422	10.00-16	N/A	18.4-34	6,901
Massey Ferguson					
MF 2670/2680 Cab/2wd (Under Fender Tank)	02991912	9.5L-15F	N/A	18.4-30	6,901
MF 5445/5455 Cab/2wd w/Std Hood (Tier II Engine Only/Fender Tank)	02985185	9.5L-15	N/A	18.4-30	6,901
MF 5460 ROPS/2wd w/Std Hood (Tier II Engine Only/Fender Tank)	02982101	10.00-16	N/A	18.4-34	6,901
New Holland					
NH T4020/4030 "Deluxe" Cab/2&4wd (Fender Tank)	02987271	9.5L-15	11.2-24	16.9-30	6,901
NH T4040/4050 "Deluxe" Cab/2&4wd (Fender Tank)	02989713	9.5L-15	11.2-24	16.9-30	6,901
NH T5040/5050/5060/5070 Cab/2&4wd (Fender Tank)	02986594	10.00-16	12.4-24	18.4-34	6,901
NH T5040/5050/5060/5070 Cab/2&4wd (Tractor Hyd/Fender Tank)	02991132	10.00-16	12.4-24	18.4-34	6,361
NH T5040/5050/5060/5070 ROPS/2&4wd (Fender Tank)	02986665	10.00-16	12.4-24	18.4-34	6,901
NH T6010/6020/6040/6060 Cab/2wd (Fender Tank)	02989121	10.00-16	N/A	18.4-34	6,901
NH T6010/6020/6040/6060 Cab/2wd (Tractor Hyd/Fender Tank)	02985615	10.00-16	N/A	18.4-34	6,361
NH T6010/6020/6040/6060 Cab/4wd (Fender Tank)	02985927	N/A	12.4-24	18.4-30	6,361
NH T6010/6020 "Delta" ROPS/2wd (Mid-Mt Tank)	02982461	10.00-16	N/A	18.4-34	6,901

OTHER SPECIFICATIONS

(1) Case-IH JX-U & Farmall U and New Holland TL-A, T4000 & T5000 series tractors require a smaller replacement battery which is not included. We recommend using Exide® #34R-84N.

VERSA MOWER

60", 72", 74" Mid-Mount Rotary/Flail Mount Kit Options

F.O.B. Seguin, TX

TRACTOR DESCRIPTION	MOUNT KIT	MAXIMUM TIRE SIZE			LIST PRICE
		2WD Front	4WD Front	Rear	
New Holland *(Continued)*					
NH T6030/6050/6070 Cab/2&4wd (Fender Tank)	02984316	10.00-16	12.4-24	18.4-34	6,901
NH T6030/6050/6070 Cab/2&4wd (Tractor Hyd/Fender Tank)	02990039	10.00-16	12.4-24	18.4-34	6,361
NH T6030/6050 ROPS/2&4wd (Fender Tank)	02984870	10.00-16	12.4-24	18.4-34	6,901
NH TB100/110 ROPS/2wd (Mid-Mt Tank)	02980759	10.00-16	N/A	18.4-30	6,901
NH TB100/110 ROPS/4wd	02986653	N/A	12.4-24	18.4-30	6,901
NH TL80/90/100 Cab/2&4wd (Fender Tank)	02980207	10.00-16	12.4-24	18.4-30	6,901
NH TL80/90/100 Cab/2&4wd (Tractor Hyd/Fender Tank)	02980910	10.00-16	12.4-24	18.4-30	6,361
NH TL80/90/100 ROPS/2wd (Mid-Mt Tank)	02979674	36x11-16 Air	N/A	20x20 Logging	6,901
NH TL80/90/100 ROPS/4wd (Fender Tank)	02980891	N/A	12.4-24	18.4-30	6,901
NH TL80/90/100 ROPS/4wd (Tractor Hyd/Fender Tank)	02980907	N/A	12.4-24	18.4-30	6,361
NH TL80A/90A/100A Cab/2&4wd (Fender Tank)	02982265	10.00-16	12.4-24	18.4-30	6,901
NH TL80A/90A/100A Cab/2&4wd (Tractor Hyd/Fender Tank)	02985908	10.00-16	12.4-24	18.4-30	6,901
NH TL80A/90A/100A ROPS/2wd (Fender Tank)	02982253	10.00-16	N/A	18.4-30	6,901
NH TL80A/90A/100A ROPS/4wd (Fender Tank)	02982879	N/A	12.4-24	18.4-30	6,901
NH TN55D/65D/70D/75D Cab/2&4wd (Fender Tank)	02983986	7.50-16	11.2-24	16.9-30	6,901
NH TN55D/65D/70D/75D Cab/2&4wd (Tractor Hyd/Fender Tank)	02987283	7.50-16	11.2-24	16.9-30	6,361
NH TN55/65/70/75 ROPS/2wd (Mid-Mt Tank)	02977579	7.50-16	N/A	16.9-30	6,901
NH TN55/65/70/75 ROPS/4wd (Fender Tank)	02981057	N/A	11.2-24	16.9-30	6,901
NH TN60DA/70DA/75DA Cab/2&4wd (Fender Tank)	02983986	7.50-16	11.2-24	16.9-30	6,901
NH TN60DA/70DA/75DA Cab/2&4wd (Tractor Hyd/Fender Tank)	02987283	7.50-16	11.2-24	16.9-30	6,361
NH TN60A/70A/75A ROPS/2wd (Mid-Mt Tank)	02977579	7.50-16	N/A	16.9-30	6,901
NH TN60A/70A/75A ROPS/4wd (Fender Tank)	02981057	N/A	11.2-24	16.9-30	6,901
NH TS100A/110A Cab/2wd (Mid-Mt Tank)	02980734	10.00-16	N/A	18.4-34	6,901
NH TS100A/110A Cab/2wd (Tractor Hyd/Mid-Mt Tank)	02980831	10.00-16	N/A	18.4-34	6,361
NH TS100A/110A Cab/4wd (Fender Tank)	02981497	N/A	13.6-24	18.4-34	6,901
NH TS100A/110A ROPS/2wd (Mid-Mt Tank)	02982461	10.00-16	N/A	18.4-34	6,901
NH TS115A/125A/130A/135A Cab/2&4wd (Fender Tank)	02984316	10.00-16	12.4-24	18.4-34	6,901
NH TS115A/125A/130A/135A Cab/2&4wd (Tractor Hyd/Fender Tank)	02990039	10.00-16	12.4-24	18.4-34	6,361
NH TS115A/125A/130A/135A ROPS/2&4wd (Fender Tank)	02984870	10.00-16	12.4-24	18.4-34	6,901
NH TS6020/6030 Rops 4/2wd	02989606	10.00-16	N/A	18.4-34	6,901

OTHER SPECIFICATIONS

(1) Case-IH JX-U & Farmall U and New Holland TL-A, T4000 & T5000 series tractors require a smaller replacement battery which is not included. We recommend using Exide® #34R-84N.

TRAXX™RF

Remote-Control Mower

CONSORTIUM CONTRACT PRICING

TRAXX™RF BASE UNIT STANDARD FEATURES

- Rubber Tracks w/Steel Cleats (Installed)
- Spike Kit w/Rubber Transport Pads (Boxed for Customer Assy.)
- Roll Guard/Frame (Installed)
- High Pressure Grease Gun Kit (Included)
- LED Strobe Light (Installed)
- Towing Kit Accessories (Included)

ORDER CODE	DESCRIPTION		LIST PRICE
	TRAXX™ RF BASE UNIT		
04774100	TRAXX™RF All-Terrain Vehicle Equipped w/ 51" Heavy Duty Head for Brush and Saplings		83,956
04774200	TRAXX™RF All-Terrain Vehicle Equipped w/ 51" Heavy Duty Head for Grass and Brush		82,856
	OPTIONS		
TR477002	Rubber Tracks (Boxed Set of 2/Customer Assy)		2,831
TR477622	Replacement Cutter Shaft For Heavy Duty Head for Brush and Saplings (Includes Replacement Bearings)		3,597
TR477623	Replacement Cutter Shaft For Heavy Duty Head for Grass and Brush (Includes Replacement Bearings)		2,497
TR477136	High Pressure Grease Gun Kit (One kit is included with Base Unit)		370
TR477147	High Wear Kit for Heavy Duty Head for Brush and Saplings		1,524
TR477143	High Wear Kit for Heavy Duty Head for Grass and Brush		1,445
TR477144	Additional Operators Manual		53
TR477145	Additional Parts Manual		53
TR477640	1 Year Extended Warranty		5,883
	REPLACEMENT CUTTER HEADS (COMPLETE)		
04773200	51" (1.3m) Heavy Duty Head for Brush and Saplings		8,450
04773100	51" (1.3m) Heavy Duty Head for Grass and Brush		7,350
	PRICING EFFECTIVE 2-15-13		

R021513

1502 East Walnut St., Seguin, TX 78155 800-882-5762 800-242-5266 fax www.alamo-industrial.com

Alamo Industrial Quick Reference Tractor Model Guide- 2013

Part #	Model Description	Compatibility	Tire Sizes	HP Rating Eng/PTO	Configuration	Consortium List Pricing
TBD-Spec1	Turn-key Tractor Spec # 1	All Series Designated for Grounds Maintenance (RFP# 070313)	9.5-24/16.9-28	45/37	Rops 4wd	26,560
TBD-Spec2	Turn-key Tractor Spec # 2	All Series Designated for Grounds Maintenance (RFP# 070313)	9.5-24/16.9-28	65/49	Cab 4wd	42,816
TBD-Spec3	Turn-key Tractor Spec # 3	All Series Designated for Grounds Maintenance (RFP# 070313)	9.5-24/16.9-28	65/49	Rops 4wd	34,376
TBD-Spec4	Turn-key Tractor Spec # 4	All Series Designated for Grounds Maintenance (RFP# 070313)	7.5-16/16.9-28	65/49	Rops 2wd	24,090
TBD-Spec5	Turn-key Tractor Spec # 5	All Series Designated for Grounds Maintenance (RFP# 070313)	11.2-24/16.9-30	84/70	Cab 4wd	67,665
TBD-Spec6	Turn-key Tractor Spec # 6	All Series Designated for Grounds Maintenance (RFP# 070313)	11.2-24/16.9-30	84/70	Rops 4wd	56,948
TBD-Spec7	Turn-key Tractor Spec # 7	Can Mount up to 23' Boom (Versa Series Only)	12.4-24/18.4-30	85/70	CAB 4wd	58,316
02991719	Turn-key Tractor Spec # 8	Can Mount up to 23' Boom (Versa Series Only)	12.4-24/18.4-30	85/70	CAB 4wd	65,447
TBD-Spec9	Turn-key Tractor Spec # 9	Can Mount up to 23' Boom (Versa Series Only)	12.4-24/18.4-30	85/70	ROPS 4wd	(9,296)
02992033	Turn-key Tractor Spec # 10	Can Mount up to 30' Boom (All Series)	14.9-24/18.4-34	105/86	CAB 4wd	87,311
TBD-Spec11	Turn-key Tractor Spec # 11	Can Mount up to 30' Boom (All Series)	400/80-R24/480-80R34	105/86	CAB 4wd	1,651
TBD-Spec12	Turn-key Tractor Spec # 12	Can Mount up to 25' Boom (All Series)	10.00-16/18.4R34	105/86	CAB 2wd	(8,151)
TBD-Spec13	Turn-key Tractor Spec # 13	Can Mount up to 30' Boom (All Series)	14.9-24/18.4-34	105/86	ROPS 4wd	(8,970)
TBD-Spec14	Turn-key Tractor Spec # 14	Can Mount up to 25' Boom (All Series)	11.00L15/18.4R34	105/86	ROPS 2wd	(17,545)

Rev 6/25/2013

Note * All Tractor Models May Take up To 180 Days to Ship From Manufacturer

Alamo Industrial Quick Reference Tractor Model Guide- 2013

Part #	Model Description	Compatibility	Tire Sizes	HP Rating Eng/PTO	Configuration	Consortium List Pricing
02992034	Turn-key Tractor Spec # 15	Can Mount up to 30' Boom (All Series)	14.9-24/18.4-34	115/95	CAB 4wd	91,447
TBD-Spec16	Turn-key Tractor Spec # 16	Can Mount up to 30' Boom (All Series)	400/80-R24/480-80R34	115/95	CAB 4wd	1,651
TBD-Spec17	Turn-key Tractor Spec # 17	Can Mount up to 25' Boom (All Series)	10.00-16/18.4R34	115/95	ROPS 2wd	(8,151)
TBD-Spec18	Turn-key Tractor Spec # 18	Can Mount up to 30' Boom (All Series)	14.9-24/18.4-34	115/95	ROPS 4wd	(8,970)
TBD-Spec19	Turn-key Tractor Spec # 19	Can Mount up to 25' Boom (All Series)	11.00L15/18.4R34	115/95	CAB 2wd	(17,545)
02992035	Turn-key Tractor Spec # 20	Can Mount up to 30' Boom (All Series)	13.6-28/18.11-38	125/102	CAB 4wd	99,460
TBD-Spec21	Turn-key Tractor Spec # 21	Can Mount up to 30' Boom (All Series)	440/80-R24/480-80R38	125/102	CAB 4wd	2,326
TBD-Spec22	Turn-key Tractor Spec # 22	Can Mount up to 25' Boom (All Series)	10.00-16/18.4R34	125/102	CAB 2wd	(8,135)
TBD-Spec23	Turn-key Tractor Spec # 23	Can Mount up to 30' Boom (All Series)	13.6-28/18.11-38	125/102	ROPS 4wd	(10,323)
TBD-Spec24	Turn-key Tractor Spec # 24	Can Mount up to 25' Boom (All Series)	11.00L15/18.4R34	125/102	ROPS 2wd	(18,883)
02991978	Turn-key Tractor Spec # 25	Can Mount up to 25' Boom (All Series)	14.9-24-18.4-34	110/90	CAB 4wd	61,266
TBD-Spec26	Turn-key Tractor Spec # 26	Can Mount up to 23' Boom (All Series)	10.00-16/18.4-34	110/90	CAB 2wd	(1,916)
TBD-Spec27	Turn-key Tractor Spec # 27	Can Mount up to 25' Boom (All Series)	14.9-24-18.4-34	110/90	ROPS 4wd	(6,887)
TBD-Spec28	Turn-key Tractor Spec # 28	Can Mount up to 25' Boom (All Series)	10.00-16/18.4-34	110/90	ROPS 2wd	(8,426)

Rev 6/25/2013

Note * All Tractor Models May Take up To 180 Days to Ship From Manufacturer

Alamo Industrial Quick Reference Tractor Model Guide- 2013

Part #	Model Description	Compatibility	Tire Sizes	HP Rating Eng/PTO	Configuration	Consortium List Pricing
TBD-Spec29	Turn-key Tractor Spec # 29	Can Mount up to 25' Boom (All Series)	14.9-24-18.4-34	118/96	CAB 4wd	62,676
TBD-Spec30	Turn-key Tractor Spec # 30	Can Mount up to 23' Boom (All Series)	10.00-16/18.4-34	118/96	CAB 2wd	(1,916)
TBD-Spec31	Turn-key Tractor Spec # 31	Can Mount up to 25' Boom (All Series)	14.9-24-18.4-34	118/96	ROPS 4wd	(6,887)
TBD-Spec32	Turn-key Tractor Spec # 32	Can Mount up to 23' Boom (All Series)	10.00-16/18.4-34	118/96	ROPS 2wd	(8,426)
02991979	Turn-key Tractor Spec # 33	Can Mount up to 30' Boom (All Series)	14.9-24-18.4-34	124/105	CAB 4wd	68,057
TBD-Spec34	Turn-key Tractor Spec # 34	Can Mount up to 25' Boom (All Series)	10.00-16/18.4-34	124/105	CAB 2wd	(3,560)
TBD-Spec35	Turn-key Tractor Spec # 35	Can Mount up to 30' Boom (All Series)	14.9-24-18.4-34	124/105	ROPS 4wd	(7,151)
TBD-Spec36	Turn-key Tractor Spec # 36	Can Mount up to 25' Boom (All Series)	10.00-16/18.4-34	124/105	ROPS 2wd	(10,709)
TBD-Spec37	Turn-key Tractor Spec # 37	Can Mount up to 25' Boom (Front Mount Series)	440/80R28 Non-Directional	125/105	CAB 4wd	124,260

Rev 6/25/2013

Note * All Tractor Models May Take up To 180 Days to Ship From Manufacturer

AXTREME2 BOOM

18', 22', 28' Articulated Models

F.O.B. Seguin, TX

STANDARD SPECIFICATIONS

- Bolt-On Undermount with Front and Rear Attached Rails
- Exclusive Slewing Ring Bearing is Featured for Boom Maneuverability
- Standard Boom Structure Made from Alloy Steel
- Main Pivot Features 2' Chrome Pins with Greaseable, Hardened Steel Bushings
- Self Contained Front Mounted Hydraulic System
- Oil-to-Air Cooler with Electric Fan
- Ability to Mow Horizontally within 6" of Rear Tire with Swivel Heads
- Boom Features Dipper and Lift
- Boom Reach Specs: **18' Models**= Up 17'-1", Out-18', Down 9'-8" **22' Mode**ls= Up-19' 7", Out-22', Down-12' 1"

25' Models= Up-22' 2", Out-25', Down-15' 6" **28' Models**= Up-24' 2", Out-27', Down-17' 6"

- 180° Horizontal Boom Swing
- Axle-Mounted Boom Rest
- Mount Kit, all Wheel Weight, and Polycarbonate Window Included in Base Price
- Tractor Req: Min of 8,500 lbs and 90 HP. Min 90" Wheelbase and 18" Ground Clearance

HEAD SPECIFICATIONS

- 58" Cutting Diameter
- Alloy Deck Material with Double Wall Side Skirt
- 4-1/2"x9" Heat-Treated Alloy Spindle
- 152 HP Motor Direct-Coupled
- 2-1/2" x 5" Stacked Three-Leaf Blade Bar, Alloy Steel
- 5/8" x 5" High-Carbon Alloy Steel Blade, 360° Swing
- Standard (1) year limited parts and labor warranty.

PRODUCT ORDER CODE	DESCRIPTION	APPRX. WEIGHT		LIST PRICE
Boom Base Unit *(One Choice Required)*				
04831820	18' Axtreme II Boom (Joystick Control)	5,000		44,252
04831821	18' Axtreme II Boom (Cable Control)	4,800		37,107
04832220	22' Axtreme II Boom (Joystick Control)	5,200		45,509
04832221	22' Axtreme II Boom (Cable Control)	5,000		38,962
04832520	25' Axtreme II Boom (Joystick Control)	5,700		47,740
04832521	25' Axtreme II Boom (Cable Control)	5,500		41,192
04832628	28' Axtreme II Boom (Joystick Control)			52,440
04832528	28' Axtreme II Boom (Cable Control)			45,705
Mower Head *(One Choice Required)*				
02986190AJ	60" Rotary w/Ctr Hyd Door, Blade Bar & Head Swivel (Joystick Control)	1115		14,690
02986190AC	60" Rotary w/Ctr Hyd Door, Blade Bar & Head Swivel (Cable Control)	1115		14,690
02986203	60" Rotary w/Ctr Hyd Door, Blade Bar (No Head Swivel)	1061		12,664
02986213AJ	50" Rotary w/Ctr Hyd Door, Blade Bar & Head Swivel (Joystick Control)			13,992
02986213AC	50" Rotary w/Ctr Hyd Door, Blade Bar & Head Swivel (Cable Control)			13,992
02986211	50" Rotary w/Ctr Hyd Door, Blade Bar (No Head Swivel)			11,966
02986212AJ	50" Rotary w/Ctr Hyd Door, Blade Pan & Head Swivel (Joystick Control)			13,169
02986212AC	50" Rotary w/Ctr Hyd Door, Blade Pan & Head Swivel (Cable Control)			13,169
02986210	50" Rotary w/Ctr Hyd Door, Blade Pan (No Head Swivel)			11,143
02986251AJ	48" Flail-Axe w/Head Swivel (Joystick Control)			14,541
02986251AC	48" Flail-Axe w/Head Swivel (Cable Control)			14,541
02986253	48" Flail-Axe (No Head Swivel)	777		12,515

AXTREME2 BOOM

18', 22', 28' Articulated Models

F.O.B. Seguin, TX

PRODUCT ORDER CODE	DESCRIPTION	APPRX. WEIGHT		LIST PRICE
Mower Head *(One Choice Required)*				
02986252AJ	48" Flail-Axe, SHD Cuttershaft (3 oz Knives) w/Head Swivel (Joystick Control)			15,731
02986252AC	48" Flail-Axe, SHD Cuttershaft (3 oz Knives) w/Head Swivel (Cable Control)			15,731
02986252AJ	48" Flail-Axe, SHD Cuttershaft (3 oz Knives) w/Head Swivel (Joystick Control)			15,731
02986252AC	48" Flail-Axe, SHD Cuttershaft (3 oz Knives) w/Head Swivel (Cable Control)			15,731
02988228	48" Grass Flail, SHD Cuttershaft			13,704
02988229	60" Grass Flail, SHD Cuttershaft	800		13,813
02988233	Bomford 60" HD Grass Flail (Non-Swivel)			12,640
02988881	Bomford 60" HD Grass Flail (Swivel)- Requires Swivel Wiring Kit			14,395
02988255	5' Timber Cat Sickle Bar	682		13,127
02988256	7' Timber Cat Sickle Bar	770		13,944
02986235	90" Buzzbar (4 Blade)	1098		15,598
02986229	69" Buzzbar (3 Blade)	705		13,845
02986219	48" Buzzbar (2 Blade)	550		11,099
02988854	Ditcher Head (Hitch Post Mounted)			12,869
Options				
02988075A	Additional Operators and Parts Manuals			54
02989326	Quick Hitch Kit*			3,948
02989327	Hydraulic Kit for Quick Hitch Head**			523
02975647	Flail-Axe Jack Stand Kit***			342
02984479	Flail-Axe Swivel Hitch Post Conversion Kit			4,914
02984049	JD 6215/6415/6020/6030 Frt Axle Stabilizer Kit (4wd Only)			1,128
02984226	JD 6615/6715 Frt Axle Stabilizer Kit (4wd Only)			1,128
02985058	MF 5460 Frt Axle Stabilizer Kit (4wd Only)			1,128
02984671	MF 5465 Frt Axle Stabilizer Kit (4wd Only)			1,128
02984048	NH TS-A Frt Axle Stabilizer Kit (4wd Only)			1,128
02984877	NH TS-A Joystick Mount for Deluxe Seat			97
02985484	NH T6000 Series Frt Axle Stabilizer Kit (4wd Only)			1,128
02985029	Mounting Labor & Oil			6,259
02791800	Special Mower Paint			1,243
02968967	Special Tractor Paint			5,537
00889899A	Additional 12 Month Warranty (00889899)			4,014

** Includes all components to convert boom and (1) head to Quick Hitch*
*** Required to convert additional heads to Quick Hitch*
**** Required to level Flail-Axe for Quick Hitch*

AXTREME2 BOOM

18' Mount Kit Options

F.O.B. Seguin, TX

TRACTOR DESCRIPTION	MOUNT KIT	MAXIMUM TIRE SIZE		
		2WD Front	4WD Front	Rear
Case IH				
Case-IH MXU100/110 Cab 2/4wd (Joystick)	02987221	11.00-16	14.9-24	18.4-34
Case-IH MXU100/110 Cab 2/4wd (Cable)	02987224	11.00-16	14.9-24	18.4-34
Case-IH Maxxum 115/125/125 Pro/140 Pro Cab/2&4wd (Joystick) 2010-2012	02991283	11.00-16	14.9-24	18.4-34
Case-IH Maxxum 115/125/125 Pro/140 Pro Cab/2&4wd (Cable) 2010-2012	02991282	11.00-16	14.9-24	18.4-34
Case-IH Maxxum 115/125/125 Pro/140 Pro Cab/2&4wd (Joystick) 2007-2010	02987104	11.00-16	14.9-24	18.4-34
Case-IH Maxxum 115/125/125 Pro/140 Pro Cab/2&4wd (Cable) 2007-2010	02987100	11.00-16	14.9-24	18.4-34
John Deere				
JD 6215/6415 Cab/2&4wd (Joystick)	02990347	10.00-16	13.6-24	18.4-34
JD 6120/6220/6320/6420 Cab/2&4wd (Joystick)	02990347	10.00-16	13.6-24	18.4-34
JD 6230/6330/6430 "Mid-Spec" Cab/2&4wd (Joystick)	02991525	10.00-16	13.6-24	18.4-34
JD 6230/6330/6430 "Mid-Spec" Cab/2&4wd (Cable)	02987062	10.00-16	13.6-24	18.4-34
JD 6230/6330/6430 "Premium" Cab/2&4wd (Joystick)	02987066	10.00-16	13.6-24	18.4-34
JD 6230/6330/6430 "Premium" Cab/2&4wd (Cable)	02987062	10.00-16	13.6-24	18.4-34
JD 6615/6715 Cab/2&4wd (Joystick)	02991685	10.00-16	13.6-24	18.4-34
JD 7220/7320 Cab/2&4wd (Joystick/34" Flanged Rear Whl)	02987200	11.00-16	13.6-28	18.4-34
JD 7220/7320 Cab/2&4wd (Joystick/38" Flanged Rear Whl)	02987202	11.00-16	14.9-28	18.4-38
JD 7130/7230 "Mid-Spec" Cab/2&4wd (4 or 6 Cyld / 55 gal. Fuel Tank / Joystick)	02990424	11.00-16	13.6-28	18.4-38
Massey Ferguson				
MF 5460 Cab/2&4wd (Joystick)	02987204	11.00-16	14.9-24	18.4-34
MF 5460 Cab/2&4wd (Cable)	02987207	11.00-16	14.9-24	18.4-34
MF 5465 Cab/2&4wd (Tier II Engine Only / Joystick)	02987213	11.00-16	14.9-24	18.4-34
New Holland				
NH TS100A/110A Cab/2&4wd (Joystick)	02987221	11.00-16	14.9-24	18.4-34
NH TS100A/110A Cab/2&4wd (Cable)	02987224	11.00-16	14.9-24	18.4-34
NH T6030/6050/6070 Cab/4wd (Built Before May 2010 / Joystick)	02987104	11.00-16	14.9-24	18.4-34
NH T6030/6050/6070 Cab/4wd (Built Before May 2010 / Cable)	02987100	11.00-16	14.9-24	18.4-34
NH T6030/6050/6070 Cab/4wd (Built After May 2010 / Joystick)	02991283	11.00-16	14.9-24	18.4-34
NH T6030/6050/6070 Cab/4wd (Built After May 2010 / Cable)	02991282	11.00-16	14.9-24	18.4-34

OTHER SPECIFICATIONS

(1) Always use the maximum tire size for favorable ground clearance.
(2) Tractors should not be ordered with armrest-integrated controls.
(3) Tractors must be equipped with flanged rear rims unless otherwise noted.
(4) Right handrail removal may be necessary for boom transport clearance.
(5) John Deere tractors must include a standard through-hood exhaust.
(6) Case-New Holland mount kits include an exhaust relocation feature.

AXTREME2 BOOM

22', 25' Mount Kit Options

F.O.B. Seguin, TX

Note: 25" Axteme units are to be mounted on 4WD model tractors only

TRACTOR DESCRIPTION	MOUNT KIT	MAXIMUM TIRE SIZE		
		2WD Front	4WD Front	Rear
Case IH				
Case-IH MXU100/110 Cab/2&4wd (Joystick)	02987226	11.00-16	14.9-24	18.4-34
Case-IH MXU100/110 Cab/2&4wd (Cable)	02987227	11.00-16	14.9-24	18.4-34
Case-IH MXU115/125/130/135 Cab/2&4wd (Joystick)	02987232	11.00-16	14.9-24	18.4-34
Case-IH MXU115/125/130/135 Cab/2&4wd (Cable)	02987235	11.00-16	14.9-24	18.4-34
Case-IH Maxxum 110/110 Pro/120 Pro/130 Pro Cab 2/4wd (Joystick) 2010-2012	02991281	11.00-16	14.9-24	18.4-34
Case-IH Maxxum 110/110 Pro/120 Pro/130 Pro Cab 2/4wd (Cable) 2010-2012	02991280	11.00-16	14.9-24	18.4-34
Case-IH Maxxum 110/110 Pro/120 Pro/130 Pro Cab/2&4wd (Joystick)	02987094	11.00-16	14.9-24	18.4-34
Case-IH Maxxum 110/110 Pro/120 Pro/130 Pro Cab/2&4wd (Cable)	02987098	11.00-16	14.9-24	18.4-34
Case-IH Maxxum 115/125/125 Pro/140 Pro Cab/2&4wd (Joystick)	02987107	11.00-16	14.9-24	18.4-34
Case-IH Maxxum 115/125/125 Pro/140 Pro Cab/4wd w/Repl. Fuel Tank (Joystick)	02990277	N/A	14.9-28	18.4-38
Case-IH Maxxum 115/125/125 Pro/140 Pro Cab/2&4wd (Cable)	02987106	11.00-16	14.9-24	18.4-34
Challenger				
Challenger MT445B/455B/465B Cab/2&4wd (Tier III Engine Only)	02990890	11.00-16	14.9-24	18.4-34
John Deere				
JD 6230/6330/6430 "Mid-Spec" Cab/2&4wd (Joystick)	02987070	10.00-16	13.6-24	18.4-34
JD 6230/6330/6430 "Mid-Spec" Cab/2&4wd (Cable)	02987069	10.00-16	13.6-24	18.4-34
JD 6230/6330/6430 "Premium" Cab/2&4wd (Joystick)	02987068	10.00-16	13.6-24	18.4-34
JD 6230/6330/6430 "Premium" Cab/2&4wd (Cable)	02987069	10.00-16	13.6-24	18.4-34
JD 6615/6715 Cab/2&4wd (Joystick)	02987195	11.00-16	13.6-24	18.4-34
JD 6615/6715 Cab/2&4wd (Cable)	02987198	11.00-16	13.6-24	18.4-34
JD 7220/7320 Cab/2&4wd (Joystick/38" Rack & Pinion Axle)	02991349	11.00-16	13.6-28	18.4-34
JD 7220/7320 Cab/2&4wd (Cable/38" Rack & Pinion Axle)	02990131	11.00-16	13.6-28	18.4-34
JD 7130/7230 "Mid-Spec" Cab/2&4wd (4 or 6 Cyld / 55 gal. Fuel Tank / Joystick)	02987072	11.00-16	13.6-28	18.4-38
JD 7130/7230 "Premium" Cab/2&4wd (6 Cyld / 55 gal. Fuel Tank / Flanged Rear Whl / Built Before Nov. 1, 2010 / Joystick)	02987076	11.00-16	14.9-28	18.4-38
Massey Ferguson				
MF 5460 Cab/2&4wd (Joystick)	02987211	11.00-16	14.9-24	18.4-34
MF 5460 Cab/2&4wd (Cable)	02987210	11.00-16	14.9-24	18.4-34
MF 5465 Cab/2&4wd (Tier II Engine Only / Joystick)	02987215	11.00-16	14.9-24	18.4-34
New Holland				
NH 5610S/6610S ROPS/2&4wd (Cable)	02989073	10.00-16	14.9-24	18.4-34
NH TS100A/110A Cab/2&4wd (Joystick)	02987226	11.00-16	14.9-24	18.4-34
NH TS100A/110A Cab/2&4wd (Cable)	02987227	11.00-16	14.9-24	18.4-34
NH TS115A/125A/130A/135A Cab/2&4wd (Joystick)	02987232	11.00-16	14.9-24	18.4-34
NH TS115A/125A/130A/135A Cab/2&4wd (Cable)	02987235	11.00-16	14.9-24	18.4-34
NH T6010/6020/6040/6060 Cab/2&4wd (Built Before May 2010 / Joystick)	02987094	11.00-16	14.9-24	18.4-34
NH T6010/6020/6040/6060 Cab/2&4wd (Built Before May 2010 / Cable)	02987098	11.00-16	14.9-24	18.4-34
NH T6010/6020/6040/6060 Cab/2&4wd (Built After May 2010 / Joystick)	02991281	11.00-16	14.9-24	18.4-34
NH T6010/6020/6040/6060 Cab/2&4wd (Built After May 2010 / Cable)	02991280	11.00-16	14.9-24	18.4-34
NH T6030/6050/6070 Cab/2&4wd (Built Before May 2010 / Joystick)	02987107	11.00-16	14.9-24	18.4-34
NH T6030/6050/6070 Cab/2&4wd (Built Before May 2010 / Cable)	02987106	11.00-16	14.9-24	18.4-34
NH T6030/6050/6070 Cab/4wd w/Repl. Fuel Tank (Built Before May 2010 / Joystick)	02990277	N/A	14.9-28	18.4-38
NH T6030/6050/6070 Cab/2&4wd (Built After May 2010 / Joystick)	02991285	11.00-16	14.9-24	18.4-34
NH T6030/6050/6070 Cab/2&4wd (Built After May 2010 / Cable)	02991284	11.00-16	14.9-24	18.4-34
NH T6030/6050/6070 Cab/4wd w/Repl. Fuel Tank (Built After May 2010 / Joystick)	02991286	N/A	14.9-28	18.4-38
NH TS6020/6030 ROPS/2&4wd (Joystick)	02990973	10.00-16	14.9-24	18.4-34

OTHER SPECIFICATIONS

(1) Always use the maximum tire size for favorable ground clearance.
(2) Tractors should not be ordered with armrest-integrated controls.
(3) Tractors must be equipped with flanged rear rims unless otherwise noted.
(4) Right handrail removal may be necessary for boom transport clearance.
(5) John Deere tractors must include a standard through-hood exhaust.
(6) Case-New Holland mount kits include an exhaust relocation feature.

AXTREME2 BOOM

28' Mount Kit Options

F.O.B. Seguin, TX

Note: 28' Axteme units are to be mounted on 4WD model tractors only

TRACTOR DESCRIPTION	MOUNT KIT	MAXIMUM TIRE SIZE		
		2WD Front	4WD Front	Rear
Case IH				
Case-IH MXU100/110 Cab/4wd (Joystick)	02986063	N/A	14.9-24	18.4-34
Case-IH MXU100/110 Cab/4wd (Cable)	02986072	N/A	14.9-24	18.4-34
Case-IH MXU115/125/130/135 Cab/4wd (Joystick)	02986317	N/A	14.9-24	18.4-34
Case-IH MXU115/125/130/135 Cab/4wd (Cable)	02989085	N/A	14.9-24	18.4-34
Case-IH Maxxum 110/110 Pro/120 Pro/130 Pro ROPS/4wd (Cable)	02990450	N/A	14.9-24	18.4-34
Case-IH Maxxum 115/125/125 Pro/140 Pro Cab/4wd (Cable)	02990392	N/A	14.9-24	18.4-34
Case-IH Maxxum 115/125/125 Pro/140 Pro Cab/4wd w/Repl. Fuel Tank (Cable)	02990473	N/A	14.9-28	18.4-38
Case-IH Maxxum 115/125/125 Pro/140 Pro ROPS/4wd (Cable)	02989480	N/A	14.9-24	18.4-34
John Deere				
JD 6230/6330/6430 "Mid-Spec" Cab/2&4wd (Joystick)	02989733	N/A	13.6-24	18.4-34
JD 6230/6330/6430 "Mid-Spec" Cab/2&4wd (Cable)	02990112	N/A	13.6-24	18.4-34
JD 7130 "Mid-Spec" Cab/4wd (4 Cyl)- Cable Control	02991631	N/A	13.6-28	18.4-38
JD 7220/7320 Cab/2&4 (Joystick/34" Flanged Rear Whl)	02989265	N/A	13.6-28	18.4-34
JD 7220/7320 Cab/2&4 (Cable w/34" Flanged Rear Whl)	02989263	N/A	13.6-28	18.4-34
JD 7130/7230 "Mid-Spec" Cab/4wd (6 Cyld / 55 gal. Fuel Tank / Joystick)	02988263	N/A	13.6-28	18.4-38
JD 7130/7230 "Prem" Cab/4wd (6 Cyld / 55 gal. Fuel Tank / Flanged Rear Whl / Built Before Nov. 1, 2010 / Joystick)	02986776	N/A	14.9-28	18.4-38
JD 7130/7230 "Prem" Cab/4wd (6 Cyld / 55 gal. Fuel Tank / Flanged Rear Whl / Built Before Nov. 1, 2010 / Cable)	02986773	N/A	14.9-28	18.4-38
Massey Ferguson				
MF 5465/5475 Cab/4wd (Tier III Perkins Engine Only / Cable)	02990214	N/A	14.9-28	18.4-38
New Holland				
NH TS100A/110A Cab/4wd (Joystick)	02986063	N/A	14.9-24	18.4-34
NH TS100A/110A Cab/4wd (Cable)	02986072	N/A	14.9-24	18.4-34
NH TS115A/125A/130A/135A Cab/4wd (Joystick)	02986317	N/A	14.9-24	18.4-34
NH TS115A/125A/130A/135A Cab/4wd (Cable)	02989085	N/A	14.9-24	18.4-34
NH T6010/6020 "Delta" ROPS/4wd (Cable)	02990450	N/A	14.9-24	18.4-34
NH T6030/6050/6070 Cab/4wd (Built Before May 2010 / Cable)	02990392	N/A	14.9-24	18.4-34
NH T6030/6050/6070 Cab/4wd w/Repl. Fuel Tank (Built Before May 2010 / Cable)	02990473	N/A	14.9-28	18.4-38
NH T6030/6050/6070 Cab/4wd w/Repl. Fuel Tank (Built After May 2010 / Joystick)	02991351	N/A	14.9-28	18.4-38
NH T6030/6050/6070 Cab/4wd w/Repl. Fuel Tank (Built After May 2010 / Cable)	02991287	N/A	14.9-28	18.4-38
NH T6030/6050 ROPS/4wd (Cable)	02989480	N/A	14.9-24	18.4-34
NH TS6020/6030 ROPS/4wd (Cable)	02990478	N/A	14.9-24	18.4-34

OTHER SPECIFICATIONS

(1) Always use the maximum tire size for favorable ground clearance.
(2) Tractors should not be ordered with armrest-integrated controls.
(3) Tractors must be equipped with flanged rear rims unless otherwise noted.
(4) Right handrail removal may be necessary for boom transport clearance.
(5) John Deere tractors must include a standard through-hood exhaust.
(6) Case-New Holland mount kits include an exhaust relocation feature.

MACHETE2 BOOM

18', 22', 25' Articulated Models

F.O.B. Seguin, TX

STANDARD SPECIFICATIONS

- 4" X 4" Square Tubular Frame
- Features a 2 1/2" greaseable "king post" style turning arm.
- Main pivots points utilize 2' pins with greaseable, hardened steel bushings.
- Self contained hydraulic system.
- 20 gal Front-Mounted Reservoir/35 gal Total System Volume
- Motor Circuit: Piston Pump Rated @ 25 gpm (43.8 hp) & 3,000 psi @ 2,200 rpm.
  Charge Pump Rated @ 8 gpm (1.4 hp) & 300 psi @ 2,200 rpm.
- Control Circuit: Piston Pump Rated @ 18 gpm (31.5 hp) & 3,000 psi @ 2,200 rpm.
- Inner Boom Arm 6"x6"x1/4" Alloy Steel Tubing
- Outer Boom Arm 5"x5"x1/4" Alloy Steel Tubing
- 120° Horizontal Boom Swing
- Boom Reach: Up-18' 7", Out-18', Down-5' 1".
- Mount Kit, Wheel Weight, and Polycarbonate Window Included in Base Price
- Tractor Req: Min of 8,500 lbs and 90 eng. hp. Min 90" Wheelbase and 18" Ground Clearance

HEAD SPECIFICATIONS

- 58" Cutting Diameter
- Alloy Deck Material with Double Wall Side Skirt
- 4-1/2"x9" Heat-Treated Alloy Spindle
- 205 HP Direct-Coupled Piston Motor
- Stacked Three-Leaf, Alloy Steel Blade Bar
- 5/8" x 5" Double -Edged, Tempered Steel Blades, 360° Swing
- Standard (1) year limited parts and labor warranty.

PRODUCT ORDER CODE	DESCRIPTION	APPRX. WEIGHT		LIST PRICE
	Base Unit *(One Choice Required)*			
04861801	18' Machete II Boom- 4wd (Joystick Control)			39,827
04861800	18' Machete II Boom- 2wd (Joystick Control)			39,827
04862201	22' Machete II Boom- 4wd (Joystick Control)			40,958
04862200	22' Machete II Boom- 2wd (Joystick Control)			40,958
04862501	25' Machete II Boom- 4wd (Joystick Control)			42,966
04862500	25' Machete II Boom- 2wd (Joystick Control)			42,966
	MOWER HEAD *(One Choice Required)*			
02986191	60" Rotary w/Ctr Hyd Door, Blade Bar & Head Swivel	1,080		16,463
02986205	60" Rotary w/Ctr Hyd Door, Blade Bar (No Head Swivel)	1,026		15,118
02986197	50" Rotary w/Ctr Hyd Door, Blade Bar & Head Swivel			16,117
02986704	50" Rotary w/Ctr Hyd Door, Blade Bar (No Head Swivel)			14,292
02986198	50" Rotary w/Ctr Hyd Door, Blade Pan & Head Swivel			15,295
02986703	50" Rotary w/Ctr Hyd Door, Blade Pan (No Head Swivel)			13,470
02986262	48" Flail-Axe w/Head Swivel			15,539
02986254	48" Flail-Axe (No Head Swivel)			13,715
02989697	48" Flail-Axe, SHD Cuttershaft (4 oz Knives, No Head Swivel)			15,086
02986263	60" HD Grass Flail w/Head Swivel			16,218
02988186	60" HD Grass Flail (No Head Swivel)	870		14,394
02988159	5' Timber Cat Sickle Bar	682		11,688
02988158	7' Timber Cat Sickle Bar	770		12,695
02986245	90" Buzzbar (4 Blade)	1098		14,586
02986237	69" Buzzbar (3 Blade)	705		13,776
02986236	48" Buzzbar (2 Blade)	550		11,046
02988100	Ditcher Head (Hitch Post Mounted)			12,807

MACHETE2 BOOM

18', 22', 25' Articulated Models

F.O.B. Seguin, TX

PRODUCT ORDER CODE	DESCRIPTION	APPRX. WEIGHT		LIST PRICE
	OPTIONS			
02986941A	Additional Operators and Parts Manuals			54
02989463	Quick Hitch Kit*			3,553
02989464	Hydraulic Kit for Quick Hitch Head**			471
02975647M	Flail-Axe Jack Stand Kit*** (02975647)			307
02984400	HD Grass Flail Jack Stand Kit***			301
02982002	Mounting Labor & Oil			6,603
02791800	Special Mower Paint			1,243
02968967	Special Tractor Paint			5,537
00889899MC	Additional 12 Month Warranty (00889899)			4,014

** Includes all components to convert boom and (1) head to Quick Hitch*
*** Required to convert additional heads to Quick Hitch*
**** Required to level Flail Heads for Quick Hitch*

MACHETE2 BOOM

18', 22' 25' Mount Kit Options

F.O.B. Seguin, TX

Note: 25" Machete units are to be mounted on 4WD model tractors only

TRACTOR DESCRIPTION	MOUNT KIT	MAXIMUM TIRE SIZE		
		2WD Front	4WD Front	Rear
Case IH				
Case-IH Maxxum 110/110 Pro/120 Pro/130 Pro Cab/4wd	02987861	N/A	14.9-24	18.4-34
Case-IH Maxxum 115/125/125 Pro/140 Pro Cab/2wd	02988161	11.00-16	N/A	18.4-34
Case-IH Maxxum 115/125/125 Pro/140 Pro Cab/4wd	02988204	N/A	14.9-24	18.4-34
Case-IH Puma 165/180/195/210 Cab/4wd (Frt Axle Stabilizer Not Incl.)	02990699	N/A	16.9R30	20.8R42
Challenger				
Challenger MT445B/455B/465B Cab/4wd (Tier III Engine Only)	02989771	N/A	14.9-24	18.4-34
Challenger MT475B Cab/4wd (Tier III)	02989824	N/A	14.9-28	18.4-38
John Deere				
JD 6110/6210/6310/6405/6410 ROPS/4wd	02989188	N/A	12.4-24	18.4-30
JD 6110/6210/6310/6405/6410 Cab/2&4wd (Frt Axle Stabilizer Not Incl.)	02990683	10.00-16	12.4-24	18.4-30
JD 6215/6415 Cab/2wd	02990190	10.00-16	N/A	18.4-30
JD 6220/6320/6420 (Tier II) Cab/2wd	02990190	10.00-16	N/A	18.4-30
JD 6230/6330/6430 "Mid-Spec" Cab/2wd	02988521	10.00-16	N/A	18.4-34
JD 6230/6330/6430 "Mid-Spec" Cab/4wd	02987774	N/A	13.6-24	18.4-34
JD 6230/6330/6430 "Premium" Cab/4wd	02987901	N/A	13.6-24	18.4-34
JD 7130/7230 "Mid-Spec" Cab/2wd (Frt Axle Stabilizer Not Incl.)	02989869	11.00-16		18.4-38
JD 7130/7230 "Mid-Spec" Cab/4wd	02987751	N/A	13.6-28	18.4-38
JD 7130/7230 "Prem" Cab/4wd (6 cyld / 55 gal. fuel tank / Flanged Rear Whl / Built Before Nov. 1, 2010)	02989132	N/A	14.9-28	18.4-38
JD 7130/7230/7330 "Prem" Cab/4wd (4 & 6 cyld / 66 gal. fuel tank / Rack & Pinion Rear Whl / Built After Nov. 1, 2010)	02991260		14.9-28	18.4-38
JD 7410 "Mid-Spec" Cab/2wd	02991666	11.00-16	N/A	18.4-38
Massey Ferguson				
MF 5465/5475 Cab/4wd (Tier III Perkins Engine Only)	02988043	N/A	14.9-24	18.4-34
McCormick				
McCormick MC105 Cab/4wd	02991916	N/A	14.9-24	18.4-34
New Holland				
NH TS100 Cab/4wd	02990453	N/A	14.9-24	18.4-34
NH TS100 Cab/2wd (Frt Axle Stabilizer Not Incl.)	02988372	10.00-16	N/A	18.4-30
NH T6020/6040/6060 Cab/4wd (Built Before May 2010)	02987861	N/A	14.9-24	18.4-34
NH T6020/6040/6060 Cab/4wd (Built After May 2010)	02991288	N/A	14.9-24	18.4-34
NH T6030/6050/6070/6080 Cab/2wd (Built Before May 2010)	02988161	11.00-16	N/A	18.4-34
NH T6030/6050/6070/6080 Cab/2wd (Built After May 2010)	02991289	11.00-16	N/A	18.4-34
NH T6030/6050/6070/6080 Cab/4wd (Built Before May 2010)	02988204	N/A	14.9-24	18.4-34
NH T6030/6050/6070/6080 Cab/4wd (Built After May 2010)	02991290	N/A	14.9-24	18.4-34
NH TS6.110/TS6.115/TS6.120 2012-2013 Cab/4wd (Joystick Control)	TBD	N/A	14.9-24	18.4-34
NH TS6.125/TS6.140 2012-2013 Cab/4wd (Joystick Control)	02992506	N/A	14.9-24	18.4-34

OTHER SPECIFICATIONS

(1) Always use the maximum tire size for favorable ground clearance.
(2) Tractors should not be ordered with armrest-integrated controls.
(3) Tractors must be equipped with flanged rear rims unless otherwise noted.
(4) Right handrail removal may be necessary for boom transport clearance.
(5) John Deere tractors must include a standard through-hood exhaust.
(6) John Deere 7030 series fuel tanks must not exceed 66 gal.
(7) Case-New Holland mount kits include an exhaust relocation feature.

MACHETE FRONT-MOUNT BOOM

21' & 24' Articulated Models

F.O.B. Seguin, TX

STANDARD SPECIFICATIONS

- Mounting Rail Frame is Full-Length, 4"x 4"x 5/16" Steel Tubing
- 4"x 4"x 5/16" Steel Tube Mainframe with 4"x 6" x 3/16" Main Structure
- 22-Gallon Hydraulic Reservoir Tank is Mounted Within the Interior of the Frame
- Hydraulic Oil Filter is a 10 Micron Fulter with an ISO Cleanliness Code of 18/13 and a Full Flow of 35 GMP
- Inner Boom Arm 6"x 6" x 1/4" Steel Tubing
- Outer Boom Arm 5"x 5"x 1/4" Steel Tubing
- 125° Boom Swing
- Boom Reach- 21' Machete With 60" Rotary Up-21'7", Out-21'3", Down-12'10"
- Boom Reach- 24' Machete With 60" Rotary Up-24'4", Out-24', Down-15'7"
- Complete Construction of T1 Steel Available
- Piston Pump Rated @ 46 GPM @ 3600 RPM and 5000 PSI
- Front Pump is Idle During Transportation
- The Pump Assembly is Driven by the PTO Shaft
- Single Electronic Controls Five Functions
- Low Shock Start Up and Six Second Shutdown
- Boom Rest is Mounted to the Mower Frame
- Standard (1) year limited parts and labor warranty.

PRODUCT ORDER CODE	DESCRIPTION	APPRX. WEIGHT		LIST PRICE
21' & 24' MACHETE BOOM FRONT-MOUNT FOR TV140 BASE UNITS *(One Choice Required)*				
04210010	21' Machete Boom Front-Mount for NH TV140	6,200		38,198
04240010	24' Machete Boom Front-Mount for NH TV140	6,300		40,572
04210011	21' Machete Boom Front-Mount, T1 Steel, for NH TV140	6,300		40,047
04240011	24' Machete Boom Front-Mount, T1 Steel, for NH TV140	6,400		42,587
MOWER HEAD *(One Choice Required)*				
02968858	Rotary, 60" Machete (Blade Bar)	919		15,118
02970300	Flail, 48" Flail-Axe Piston Brush Cutter	770		13,714
02972460	Flail, 60" Grass Cutter	870		14,394
02972149	5' Timber Cat Sickle Bar	440		11,688
02972150	7' Timber Cat Sickle Bar	520		12,695
02973313	Ditcher-Forward Rotation Only	600		12,807
02974203	90" (4 Blade) BuzzBar Tree Cutter	1,098		16,387
02979249	69" (3 Blade) BuzzBar Tree Cutter	705		13,776
02979265	48" (2 Blade) Buzzbar Tree Cutter	550		11,046
OPTIONS				
02968915	Additional Operators and Parts Manuals			54
02975614	Quick Hitch Kit*			3,851
02975615	Hydraulic Kit for Quick Hitch Head**			511
02975647M	Flail-Axe Jack Stand Kit*** (02975647)			307
02973181	Accumulator Kit - Machete	10		1,581
02979478	Mounting Labor & Oil			6,344
02791800	Special Mower Paint			1,243
00889899MF	Additional 12 Month Warranty (00889899)			4,014

Note: Tractor must include factory installed loader mounting brackets.

** Includes all components to convert boom and (1) head to Quick Hitch*
*** Required to convert additional heads to Quick Hitch*
**** Required to level Flail-Axe for Quick Hitch*

MAVERICK BOOM

24', 30' Articulated Models

F.O.B. Seguin, TX

STANDARD SPECIFICATIONS

- Bolt-On Undermount with Front and Rear Attached Rails
- Boom Features Dipper, Lift, and Telescopic Sections w/ Axle-Mounted Boom Rest
- Standard Boom Structure Made from Alloy Steel, Designed Box Section
- Main Pivot Features 2' Chrome Pins with Greaseable, Hardened Steel Bushings
- Hydraulic Pivot is Featured on Head for Maneuverability.
- Front Axle Mounted Cylinder for Automatic Self-stabilization of Unit
- Self Contained Front Mounted Hydraulic System with CAN Based Data Acquisition
- Self-Cleaning, Thermostatically Controlled Oil-to-Air Cooler
- Ability to Mow Horizontally Within 6" of Rear Tire
- Boom Reach: **24' Models=** Up-21'10", Out-24', Down-14'8" **30' Models=** Up-27'10", Out-30', Down-19'3"
- Exclusive Slewing Ring Bearing is Utilyzed for Boom Maneuverability and 180° Horizontal Boom Swing
- Joystick, Mount Kit, All Wheel Weight, Polycarbonate Window Included in Base Price
- **Tractor Req: Min of 8,500 lbs and 90 HP. Min 90" Wheelbase and 18" Ground Clearance**

HEAD SPECIFICATIONS

- 58" Cutting Diameter
- Alloy Deck Material with Double Wall Side Skirt
- 4-1/2"x9" Heat-Treated Alloy Spindle
- 199 HP Motor Direct-Coupled
- 2-1/2" x 5" Stacked Three-Leaf Blade Bar, T1 Steel
- 5/8" x 5" High-Carbon Alloy Steel Blade, 360° Swing
- Standard (1) year limited parts and labor warranty.

PRODUCT ORDER CODE	DESCRIPTION	APPRX. WEIGHT		LIST PRICE
	Maverick Base Unit *(One Choice Required)*			
04802400	24' Maverick w/ Telescoping Boom (Joystick Control)	6000		54,052
04803024	30' Maverick w/ Telescoping Boom (Joystick Control)	7500		58,830
	Mower Heads *(One Choice Required)*			
02981782	60" Rotary w/Ctr Hyd Door, Blade Bar & Head Swivel	919		16,942
02983590	60" Rotary w/Ctr Hyd Door, Blade Bar (No Head Swivel)			15,118
02981783	50" Rotary w/Ctr Hyd Door, Blade Bar & Head Swivel			16,117
02984823	50" Rotary w/Ctr Hyd Door, Blade Pan & Head Swivel			15,295
02983554	48" Flail-Axe (No Head Swivel)	770		13,714
02984371	48" Flail-Axe w/Head Swivel			15,539
02983586	48" Flail-Axe, SHD Cuttershaft (3 oz Knives)			15,086
02983560	Bomford 60" HD Grass Flail (No Head Swivel)	870		14,394
02985449	Bomford 60" HD Grass Flail w/Head Swivel			16,218
02983548	5' Timber Cat Sickle Bar	440		11,688
02983549	7' Timber Cat Sickle Bar	520		12,695
02983557	48" (2 Blade) Buzzbar Tree Cutter	550		11,046
02983556	69" (3 Blade) BuzzBar Tree Cutter	705		13,776
	Note: Heads Below Are For Use On 24' Booms Only			
02983555	90" (4 Blade) Buzzbar Tree Cutter	1098		16,467
02982531	Ditcher Head (Hitch Post Mounted)			12,807

MAVERICK BOOM

24', 30' Articulated Models

F.O.B. Seguin, TX

PRODUCT ORDER CODE	DESCRIPTION	APPRX. WEIGHT		LIST PRICE
	Options			
02981992A	Additional Operators and Parts Manuals			54
02989463	Quick Hitch Kit*			3,553
02989464	Hydraulic Kit for Quick Hitch Head**			471
02990399	Ditcher Stand Kit ***			680
02975647M	Flail-Axe Jack Stand Kit*** (02975647)			307
02984400	HD Grass Flail Jack Stand Kit***			301
02984407	JD6615/6715/7220/7320/7130/7230 Oil Cooler Brush Guard			602
02982002	Mounting Labor & Oil			6,603
02791800MV	Special Mower Paint (02791800)			1,274
02968967	Special Tractor Paint			5,537
00889899MV	Additional 12 Month Warranty (00889899)			4,014

** Includes all components to convert boom and (1) head to Quick Hitch*
*** Required to convert additional heads to Quick Hitch*
**** Required to level heads for Quick Hitch*

MAVERICK BOOM

24' Mount Kit Options

F.O.B. Seguin, TX

TRACTOR DESCRIPTION	MOUNT KIT	MAXIMUM TIRE SIZE	
		FRONT	REAR
Case IH			
Case-IH MXU100/110 Cab/4wd (24' Models Only)	02982358	14.9-24	18.4-34
Case-IH MXU115/125/130/135 Cab/4wd	02982341	14.9-24	18.4-34
Case-IH Maxxum 110/110 Pro/120 Pro/130 Pro (24' Models Only)	02986046	14.9-24	18.4-34
Case-IH Maxxum 115/125/125 Pro/140 Pro	02986049	14.9-24	18.4-34
Challenger			
Challenger MT445B/455B/465B Cab/4wd (Tier III Engine Only)	02990779	14.9-24	18.4-34
John Deere			
JD 6215/6415 Cab/4wd	02982548	13.6-24	18.4-34
JD 6220/6320/6420 (Tier II) Cab/4wd	02982577	13.6-24	18.4-34
JD 6230/6330/6430 "Mid Spec" Cab/4wd	02986011	13.6-24	18.4-34
JD 6230/6330/6430 Premium Cab/4wd w/ Panoramic Door	02991611	13.6-24	18.4-34
JD 6615/6715 Cab/4wd	02982450	13.6-24	18.4-34
JD 7210/7410/7510 Cab/4wd	02985971	13.6-28	18.4-34
JD 7220/7320 Cab/4wd (34" Flanged Rear Whl)	02983364	13.6-28	18.4-34
JD 7220/7320 Cab/4wd (38" Flanged Rear Whl)	02985173	14.9-28	18.4-38
JD 7220/7320 Cab/4wd (38" Rack & Pinion Whl)	02983920	14.9-28	18.4-38
JD 7130/7230 "Mid" Cab/4wd (4 or 6 cyld / 55 gal. fuel tank)	02987697	13.6-28	18.4-38
JD 7130/7230 "Prem" Cab/4wd (6 cyld / 55 gal. fuel tank / Flanged Rear Whl / Built Before Nov. 1, 2010)	02986620	14.9-28	18.4-38
JD 7130/7230 "Prem" Cab/4wd (6 cyld / 55 gal. fuel tank / Rack & Pinion Rear Whl / Built Before Nov. 1, 2010)	02990148	14.9-28	18.4-38
JD 7130/7230 "Prem" Cab/4wd (6 cyld IVT / 55 gal. fuel tank / Flanged Rear Whl / Built Before Nov. 1, 2010)	02986829	14.9-28	18.4-38
Massey Ferguson			
MF 5460 Cab/4wd (Tier II Engine Only)	02988138	14.9-24	18.4-34
MF 5465 Cab/4wd (Tier II Engine Only)	02983605	14.9-24	18.4-34
MF 5465/5475 Cab/4wd (Tier III Perkins Engine Only)	02991112	14.9-28	18.4-38
MF 5465/5475 Cab/4wd (Tier III Sisu Engine Only)	02991353	14.9-28	18.4-38
New Holland			
NH TS100A/110A Cab/4wd (24' Models Only)	02982358	14.9-24	18.4-34
NH TS115A/125A/130A/135A Cab/4wd	02982341	14.9-24	18.4-34
NH T6010/6020/6040/6060 Cab/4wd (Built Before May 2010)	02986046	14.9-24	18.4-34
NH T6010/6020/6040/6060 Cab/4wd (Built After May 2010)	02991292	14.9-24	18.4-34
NH T6030/6050/6070 Cab/4wd (Built Before May 2010)	02986049	14.9-24	18.4-34
NH T6030/6050/6070 Cab/4wd (Built After May 2010)	02991293	14.9-24	18.4-34

OTHER SPECIFICATIONS

(1) Always use the maximum tire size for favorable ground clearance.
(2) Mount kits are designed for use with 4wd tractors only.
(3) Tractors should not be ordered with armrest-integrated controls.
(4) Tractors must be equipped with flanged rear rims unless otherwise noted.
(5) The right handrail must be removed for boom transport clearance.
(6) John Deere tractors must include a standard through-hood exhaust.
(7) Case-New Holland mount kits include an exhaust relocation feature.

MAVERICK BOOM

30' Mount Kit Options

F.O.B. Seguin, TX

Note: 30' Maverick units are to be mounted on 4WD model tractors only

TRACTOR DESCRIPTION	MOUNT KIT	MAXIMUM TIRE SIZE	
		FRONT	REAR
Case IH			
Case-IH MXU115/125/130/135 Cab/4wd	02981892	14.9-24	18.4-34
Case-IH Maxxum 115/125/125 Pro/140 Pro	02986052	14.9-24	18.4-34
Challenger			
Challenger MT445/455/465B Cab/4wd (4 Cyl.-TIII Engine)	02991792	14.9-28	18.4-38
Challenger MT475B Cab/4wd (Tier III)	02989840	14.9-28	18.4-38
John Deere			
JD 6615/6715 Cab/4wd	02982395	13.6-24	18.4-34
JD 7210/7410/7510 Cab/4wd (34" Flanged Rear Rim)	02984191	13.6-28	18.4-34
JD 7220/7320 Cab/4wd (34" Flanged Rear Whl)	02983096	13.6-28	18.4-34
JD 7220/7320 Cab/4wd (38" Flanged Rear Whl)	02984772	14.9-28	18.4-38
JD 7220/7320 Cab/4wd (38" Rack & Pinion Whl)	02984684	14.9-28	18.4-38
JD 7130 "Mid" Cab/4wd (4 cyld / 55 gal. fuel tank)	02989932	13.6-28	18.4-38
JD 7130/7230 "Mid" Cab/4wd (6 cyld / 55 gal. fuel tank)	02986363	13.6-28	18.4-38
JD 7130/7230 Premium Cab/4wd w Panoramic Door (55 Gal Tank Only)	02991723	14.9-28	18.4-38
JD 7130/7230 "Prem" Cab/4wd (6 cyld / 55 gal. fuel tank / Flanged Rear Whl / Built Before Nov. 1, 2010)	02986617	14.9-28	18.4-38
Massey Ferguson			
MF 5465 Cab/4wd (Tier II Engine Only)	02984419	14.9-24	18.4-34
MF 5465/5475 Cab/4wd (Tier III Perkins Engine Only)	02988639	14.9-28	18.4-38
MF 5465/5475 Cab/4wd (Tier III Sisu Engine Only)	02991559	14.9-28	18.4-38
New Holland			
NH TS115A/125A/130A/135A Cab/4wd	02981892	14.9-24	18.4-34
NH T6030/6050/6070 Cab/4wd (Built Before May 2010)	02986052	14.9-24	18.4-34
NH T6030/6050/6070 Cab/4wd w/ Command Armrest (Built before May 2010)	02987356	14.9-24	18.4-34
NH T6030/6050/6070 Cab/4wd (Built After May 2010)	02991294	14.9-24	18.4-34
NH T6030/6050/6070 Cab/4wd w/ Command Armrest (Built after May 2010)	02991295	14.9-24	18.4-34

OTHER SPECIFICATIONS

(1) Always use the maximum tire size for favorable ground clearance.
(2) Mount kits are designed for use with 4wd tractors only.
(3) Tractors should not be ordered with armrest-integrated controls.
(4) Tractors must be equipped with flanged rear rims unless otherwise noted.
(5) The right handrail must be removed for boom transport clearance.
(6) John Deere tractors must include a standard through-hood exhaust.
(7) Case-New Holland mount kits include an exhaust relocation feature.

REAR MOUNT BOOM

17', 20', 23' Articulated Models

F.O.B. Seguin, TX

STANDARD SPECIFICATIONS

- Welded Steel Plate Frame Mounted to the Rear Axle and Three-Point Hitch
- 60-Gallon Hydraulic Reservoir with 12 Micron Filtration
- 4" King Post with 3" Tapered Roller Bearings
- Inner Boom Arm 6"x 6" x 1/4" Steel Tubing
- Outer Boom Arm 5"x 5" x 1/4" Steel Tubing
- 120° Horizontal Boom Swing
- Boom Reaches:
  - 17: Up-19'6", Out- 18'9", Down- 8'9"
  - 20: Up-20'3", Out- 21', Down- 12'11"
  - 23: Up-22'10", Out- 22'4", Down- 15'6"
- Stacked Hydraulic Pump @ 51 GPM @ 2500 PSI
- 4-Spool, Open Center, Tapered Positive Metering Valve
- Safety Cage (ROPS Units ONLY)
- Tractor Req: Min. 5,000 lbs. with 65 HP rating
- Mount Kit & Polycarbonate Window Included in Base Price
- Front End Weight to be Supplied by the End User.

HEAD SPECIFICATIONS

- 60" Boom-Axe Head
- 10-Gauge Top Deck with 1/4" Side Skirts
- Full Length Replaceable Skid Shoes
- 4-1/2"x 9" Heat-Treated Alloy Spindle
- 101 HP Motor Direct-Coupled
- 2-1/2"x 5" Stacked Three-Leaf Blade Bar, T1 Steel
- 5/8"x 5" High-Alloy Steel Blade, 360° Swing
- Front & Rear Safety Deflectors & Gate
- Standard (1) year limited parts and labor warranty.

PRODUCT ORDER CODE	DESCRIPTION	APPRX. WEIGHT		LIST PRICE
	REAR MOUNT BASE UNIT *(One Choice Required)*			
04912217	17' Rear-Mount Boom Assembly	6000		29,246
04912218	20' Rear-Mount Boom Assembly	6100		31,174
04912219	23' Rear-Mount Boom Assembly	6200		32,565
	MOWER HEAD *(One Choice Required)*			
02974676	60" Boom-Axe with Bar	820		10,689
02974680	50" Boom-Axe with Pan	810		10,963
02974681	50" Boom-Axe with Bar	750		10,436
02970299	48" Flail Axe	700		12,515
02963870	60" SHD Flail	760		11,608
02974204	90" Buzzbar Head	1098		16,467
02979250	69" Buzzbar Head	705		13,844
02979266	48" Buzzbar Head	550		11,099
02972145	5' Timbercat	440		12,280
02972146	7' Timbercat	520		13,077
	MOUNT KIT *(One Choice Required)*			
RM-01	NH 5610,6610,7610,5640,6640,7740 (Includes 02963021, 00751562, 02963819, 02963501)			N/C
RM-02	NH 5640,6640,7740 with CAB (Includes 02965837, 00751562, 02963501)			N/C
RM-03	NH 5610, 6610, 7610 Series II with CAB (Includes 02962115, 00751562, 02963501)			N/C
RM-04	John Deere 6020/6030/7020/7030 Series Cab (Includes 02975041, 00765452, 02963501)			N/C
RM-05	Universal (Dealer Must Modify) (Includes 02964379, 00751565, 02963819, 02963501)			N/C
RM-06	Universal (Dealer Must Modify) (Includes 02964379, 00751565, 02963501, 02964333)			N/C

REAR MOUNT BOOM

17', 20', 23' Articulated Models

F.O.B. Seguin, TX

PRODUCT ORDER CODE	DESCRIPTION	APPRX. WEIGHT		LIST PRICE
	OPTIONS			
02924700	Additional Operators and Parts Manuals			54
02976534	Quick Hitch Kit*			2,635
02976535	Hydraulic Kit for Quick Hitch Head**			468
02975647M	Flail-Axe Jack Stand Kit*** (02975647)			307
02959639	Caster Wheel Kit, Super Heavy Duty Flail	24		1,515
02972609	Wheel Weight Kit-500 lbs.	500		1,266
02971789	Wheel Weight Kit-1300 lbs.	1300		2,709
02976671	Additional 408 lbs. Kit for 1300 lbs. Wheel Weight	408		1,593
02976670	Additional 680 lbs. Kit for 1300 lbs. Wheel Weight	680		2,363
02963038	Mounting Labor & Oil			7,197
02791800	Special Mower Paint			1,243
02968967	Special Tractor Paint			5,537
00889899RW	Additional 12 Month Warranty (00889899)			4,014

** Includes all components to convert boom and (1) head to Quick Hitch*
****Required to level Flail-Axe for Quick Hitch*
**** Required to level Flail-Axe for Quick Hitch*

SAMURAI BOOM

18', 22', 25' Articulated Models

F.O.B. Seguin, TX

STANDARD SPECIFICATIONS

- 4" X 4" Square Tubular Frame
- Features a 2 1/2" greaseable "king post" style turning arm.
- Main pivots points utilize 2' pins with greaseable, hardened steel bushings.
- Self contained hydraulic system w/integrated oil cooler.
- 20 gal Front-Mounted Reservoir/35 gal Total System Volume
- Motor Circuit: Gear Pump Rated @ 30 gpm (66.5 hp) & 3,800 psi @ 2,200 rpm.
- Control Circuit: Gear Pump Rated @ 12 gpm (21 hp) & 3,000 psi @ 2,200 rpm.
- Inner Boom Arm 6"x6"x1/4" Alloy Steel Tubing
- Outer Boom Arm 5"x5"x1/4" Alloy Steel Tubing
- 120° Horizontal Boom Swing
- Boom Reach: **18' Models**= Up-18' 7", Out-18', Down-5' 1" **22' Models**= Up-22' 7", Out-22', Down-9' 1" **25' Models**= Up-25' 7", Out-25', Down-12' 1".
- Mount Kit, Wheel Weight, and Polycarbonate Window Included in Base Price
- Tractor Req: Min of 8,500 lbs and 90 eng. hp. Min 90" Wheelbase and 18" Ground Clearance

HEAD SPECIFICATIONS

- 58" Cutting Diameter
- Alloy Deck Material with Double Wall Side Skirt
- 4-1/2"x9" Heat-Treated Alloy Spindle
- 152 HP Direct-Coupled Gear Motor
- Stacked Three-Leaf, Alloy Steel Blade Bar
- 5/8" x 5" Double -Edged, Tempered Steel Blades, 360° Swing
- Standard (1) year limited parts and labor warranty.

PRODUCT ORDER CODE	DESCRIPTION	APPRX. WEIGHT		LIST PRICE
Boom Base Unit *(One Choice Required)*				
04851802	18' Samurai Boom- 4wd (Joystick Control)			41,067
04851800	18' Samurai Boom- 2wd (Joystick Control)			41,067
04851801	18' Samurai Boom- 2wd (Cable Control)			34,519
04851803	18' Samurai Boom- 4wd (Cable Control)			34,519
04852202	22' Samurai Boom- 4wd (Joystick Control)			42,325
04852200	22' Samurai Boom- 2wd (Joystick Control)			42,325
04852203	22' Samurai Boom - 4wd (Cable Control)			35,777
04852201	22' Samurai Boom- 2wd (Cable Control)			35,777
04852502	25' Samurai Boom- 4wd (Joystick Control)			44,555
04852500	25' Samurai Boom- 2wd (Joystick Control)			44,555
04852503	25' Samurai Boom- 4wd (Cable Control)			38,007
04852501	25' Samurai Boom- 2wd (Cable Control)			38,007
Mower Head *(One Choice Required)*				
02986190SJ	60" Rotary w/Ctr Hyd Door, Blade Bar & Head Swivel (Joystick Control)	1115		14,690
02986190SC	60" Rotary w/Ctr Hyd Door, Blade Bar & Head Swivel (Cable Control)	1115		14,690
02986203	60" Rotary w/Ctr Hyd Door, Blade Bar (No Head Swivel)	1061		12,664
02986213SJ	50" Rotary w/Ctr Hyd Door, Blade Bar & Head Swivel (Joystick Control)			13,992
02986213SC	50" Rotary w/Ctr Hyd Door, Blade Bar & Head Swivel (Cable Control)			13,992
02986211	50" Rotary w/Ctr Hyd Door, Blade Bar (No Head Swivel)			11,966
02986212SJ	50" Rotary w/Ctr Hyd Door, Blade Pan & Head Swivel (Joystick Control)			13,169
02986212SC	50" Rotary w/Ctr Hyd Door, Blade Pan & Head Swivel (Cable Control)			13,169
02986210	50" Rotary w/Ctr Hyd Door, Blade Pan (No Head Swivel)			11,143

SAMURAI BOOM

18', 22', 25' Articulated Models

F.O.B. Seguin, TX

PRODUCT ORDER CODE	DESCRIPTION	APPRX. WEIGHT		LIST PRICE
Mower Head Cont'd. *(One Choice Required)*				
02986251SJ	48" Flail-Axe w/Head Swivel (Joystick Control)			14,541
02986251SC	48" Flail-Axe w/Head Swivel (Cable Control)			14,541
02986253	48" Flail-Axe (No Head Swivel)	777		12,515
02986252SJ	48" Flail-Axe, SHD Cuttershaft (3 oz Knives) w/Head Swivel (Joystick Control)			15,731
02986252SC	48" Flail-Axe, SHD Cuttershaft (3 oz Knives) w/Head Swivel (Cable Control)			15,731
02988228	48" Grass Flail, SHD Cuttershaft			13,704
02988229	60" Grass Flail, SHD Cuttershaft	800		13,813
02988233	Bomford 60" HD Grass Flail (Non-Swivel)			12,640
02988881	Bomford 60" HD Grass Flail (Swivel)- Requires Swivel Wiring Kit			14,395
02988255	5' Timber Cat Sickle Bar	682		13,127
02988256	7' Timber Cat Sickle Bar	770		13,944
02986235	90" Buzzbar (4 Blade)	1098		15,598
02986229	69" Buzzbar (3 Blade)	705		13,845
02986219	48" Buzzbar (2 Blade)	550		11,099
02988854	Ditcher Head (Hitch Post Mounted)			12,869
Options				
02986950A	Additional Operators and Parts Manuals			54
02989326	Quick Hitch Kit*			3,948
02989327	Hydraulic Kit for Quick Hitch Head**			523
02975647	Flail-Axe Jack Stand Kit***			342
02985029	Mounting Labor & Oil			6,259
02791800	Special Mower Paint			1,243
02968967	Special Tractor Paint			5,537
00889899S	Additional 12 Month Warranty (00889899)			4,014

** Includes all components to convert boom and (1) head to Quick Hitch*
*** Required to convert additional heads to Quick Hitch*
**** Required to level Flail-Axe for Quick Hitch*

SAMURAI BOOM

18', 22', 25' Mount Kit Options

F.O.B. Seguin, TX

Note: 25' Samurai units are to be mounted on 4WD model tractors only

TRACTOR DESCRIPTION	MOUNT KIT	MAXIMUM TIRE SIZE		
		2WD Front	4WD Front	Rear
Case IH				
Case-IH Maxxum 110/110 Pro/120 Pro/130 Pro ROPS/2wd (Cable)	02988516	10.00-16	N/A	18.4-34
Case-IH Maxxum 110/110 Pro/120 Pro/130 Pro Canopy/2wd (Cable)	02988512	10.00-16	N/A	18.4-34
Case-IH Maxxum 110/110 Pro/120 Pro/130 Pro Cab/2wd (Cable)	02988517	10.00-16	N/A	18.4-34
Case-IH Maxxum 110/110 Pro/120 Pro/130 Pro Cab/4wd (Cable)	02987836	N/A	14.9-24	18.4-34
Case-IH Maxxum 110/110 Pro/120 Pro/130 Pro Cab/2wd (Joystick)	02988519	10.00-16	N/A	18.4-34
Case-IH Maxxum 110/110 Pro/120 Pro/130 Pro Cab/4wd (Joystick)	02987863	N/A	14.9-24	18.4-34
Case-IH Maxxum 115/125/125 Pro/140 Pro Cab/4wd (Cable)	02988242	N/A	14.9-24	18.4-34
Case-IH Maxxum 115/125/125 Pro/140 Pro Cab/4wd (Joystick)	02988241	N/A	14.9-24	18.4-34
Case-IH Maxxum 115/125/125 Pro/140 Pro ROPS/2wd (Cable)	02989875	10.00-16	N/A	18.4-34
Challenger				
Challenger MT445B/455B/465B Cab/2wd (Tier III Engine Only / Frt Axle Stabilizer Not Incl. /Cable)	02990186	10.00-16	N/A	18.4-34
Challenger MT445B/455B/465B Cab/4wd (Tier III Engine Only / Cable)	02989997	N/A	14.9-24	18.4-34
Challenger MT445B/455B/465B Cab/2wd (Tier III Engine Only / Frt Axle Stabilizer Not Incl. / Joystick)	02990188	10.00-16	N/A	18.4-34
Challenger MT445B/455B/465B Cab/4wd (Tier III Engine Only / Joystick)	02990793	N/A	14.9-24	18.4-34
John Deere				
JD 6110/6210/6310/6405/6410 Cab/2wd (Frt Axle Stabilizer Not Incl. / Joystick)	02988769	10.00-16	N/A	18.4-34
JD 6110/6210/6310/6405/6410 Cab/4wd (Frt Axle Stabilizer Not Incl. / Joystick)	02988769	N/A	12.4-24	18.4-34
JD 6120/6215/6220/6320/6415/6420 Cab/4wd (Joystick)	02988766	N/A	12.4-24	18.4-34
JD 6120/6215/6220/6320/6415/6420 ROPS/2wd (Cable)	02989021	10.00-16	N/A	18.4-34
JD 6230/6330/6430 "Mid-Spec" Cab/2wd (Cable)	02988392	10.00-16	N/A	18.4-34
JD 6230/6330/6430 "Mid-Spec" Cab/4wd (Cable)	02987668	N/A	13.6-24	18.4-34
JD 6230/6330/6430 "Mid-Spec" Cab/2wd (Joystick)	02987787	10.00-16	N/A	18.4-34
JD 6230/6330/6430 "Mid-Spec" Cab/4wd (Joystick)	02987809	N/A	13.6-24	18.4-34
JD 6230/6330/6430 "Mid-Spec" ROPS/2wd (Cable)	02989255	10.00-16	N/A	18.4-34
JD 6230/6330/6430 "Mid-Spec" ROPS/4wd (Cable)	02988182	N/A	13.6-24	18.4-34
JD 6230/6330/6430 "Mid-Spec" Canopy/4wd (Cable)	02988506	N/A	13.6-24	18.4-34
JD 6230/6330/6430 "Mid-Spec" ROPS/4wd (Joystick)	02988180	N/A	13.6-24	18.4-34
JD 7210/7410/7510 Cab/2wd (Cable)	02987707	11.00-16	N/A	18.4-34
JD 7130/7230 "Mid-Spec" Cab/2wd (Frt Axle Stabilizer Not Incl. / Joystick)	02991302	11.00-16	N/A	18.4-38
JD 7130/7230 "Mid-Spec" Cab/4wd (Cable)	02987845	N/A	13.6-28	18.4-38
JD 7130/7230 "Mid-Spec" Cab/4wd (Joystick)	02990032	N/A	13.6-28	18.4-38
McCormick				
McCormick T-Max 100/110 2012- Cab/4wd (Cable Control)	02992340	N/A	11.2-24	16.9-30
Massey Ferguson				
MF 5465/5475 Cab/4wd (Tier III Engine Only - Cable)	02988061	N/A	14.9-24	18.4-34
MF 5465/5475 Cab/4wd (Tier III Engine Only - Joystick)	02988004	N/A	14.9-24	18.4-34

OTHER SPECIFICATIONS

(1) Always use the maximum tire size for favorable ground clearance.
(2) Tractors should not be ordered with armrest-integrated controls.
(3) Tractors must be equipped with flanged rear rims unless otherwise noted.
(4) Right handrail removal may be necessary for boom transport clearance.
(5) John Deere tractors must include a standard through-hood exhaust.
(6) John Deere 7030 series fuel tanks must not exceed 66 gal.
(7) Case-New Holland mount kits include an exhaust relocation feature.

SAMURAI BOOM

18', 22', 25' Mount Kit Options

F.O.B. Seguin, TX

Note: 25' Samurai units are to be mounted on 4WD model tractors only

TRACTOR DESCRIPTION	MOUNT KIT	MAXIMUM TIRE SIZE		
		2WD Front	4WD Front	Rear
New Holland				
NH 5640/6640/7740 Cab/2wd (Cable)	02989656	10.00-16	N/A	18.4-34
NH T6020/6040/6060 ROPS/2wd (Cable)	02988516	10.00-16	N/A	18.4-34
NH T6020/6040/6060 Canopy/2wd (Cable)	02988512	10.00-16	N/A	18.4-34
NH T6020/6040/6060 Cab/2wd (Built Before May 2010 / Cable)	02988517	10.00-16	N/A	18.4-34
NH T6020/6040/6060 Cab/2wd (Built After May 2010 / Cable)	02991296	10.00-16	N/A	18.4-34
NH T6020/6040/6060 Cab/4wd (Built Before May 2010 / Cable)	02987836	N/A	14.9-24	18.4-34
NH T6020/6040/6060 Cab/4wd (Built After May 2010 / Cable)	02991298	N/A	14.9-24	18.4-34
NH T6020/6040/6060 Cab/2wd (Built Before May 2010 / Joystick)	02988519	10.00-16	N/A	18.4-34
NH T6020/6040/6060 Cab/2wd (Built After May 2010 / Joystick)	02991297	10.00-16	N/A	18.4-34
NH T6020/6040/6060 Cab/4wd (Built Before May 2010 / Joystick)	02987863	N/A	14.9-24	18.4-34
NH T6020/6040/6060 Cab/4wd (Built After May 2010 / Joystick)	02991299	N/A	14.9-24	18.4-34
NH T6030/6050 ROPS/2wd (Cable)	02989875	10.00-16	N/A	18.4-34
NH T6030/6050/6070/6080 Cab/4wd (Built Before May 2010 / Cable)	02988242	N/A	14.9-24	18.4-34
NH T6030/6050/6070/6080 Cab/4wd (Built After May 2010 / Cable)	02991300	N/A	14.9-24	18.4-34
NH T6030/6050/6070/6080 Cab/4wd (Built Before May 2010 / Joystick)	02988241	N/A	14.9-24	18.4-34
NH T6030/6050/6070/6080 Cab/4wd (Built After May 2010 / Joystick)	02991301	N/A	14.9-24	18.4-34

OTHER SPECIFICATIONS

(1) Always use the maximum tire size for favorable ground clearance.
(2) Tractors should not be ordered with armrest-integrated controls.
(3) Tractors must be equipped with flanged rear rims unless otherwise noted.
(4) Right handrail removal may be necessary for boom transport clearance.
(5) John Deere tractors must include a standard through-hood exhaust.
(6) John Deere 7030 series fuel tanks must not exceed 66 gal.
(7) Case-New Holland mount kits include an exhaust relocation feature.

VERSA BOOM

17", 20", 23' Articulated Models

F.O.B. Seguin, TX

STANDARD SPECIFICATIONS

- Welded Steel Plate Frame Braced to the Front Bolster & Rear Axle
- 60-Gallon Hydraulic Reservoir with 12-Micron Filtration
- 1300 lbs. Counterwight Tank Mounted
- 4" King Post with 3" Tapered Roller Bearings
- Inner Boom Arm 6"x6"x1/4" Steel Tubing
- Exterior Boom Arm 5"x5"x1/4" Steel Tubing
- 120° Horizontal Boom Swing
- Stacked Hydraulic Pump Rated @ 51 GPM @ 2500 PSI
- 4-Spool, Open Center, Tapered Positive Metering Valve
- Boom Reach: **17' Models**= Up-19'6", Out-18'9", Down-8'9" **20' Models**= Up-20'3", Out-20'7", Down-12'3"

23' Models- Up-22'10", Out-23'10", Down-15'6"

- Axle-Mounted Boom Rest
- Mount Kit, 1,300# Wheel Weight & Polycarbonate Window Included in Base Price

HEAD SPECIFICATIONS

- 60" Boom-Axe Head
- 10-Gauge Deck with 1/4" Side Skirts
- Full-Length Replaceable Skid Shoes
- 4-1/2" Hardened Spindle
- 90 HP Motor Directly Splined to the Spindle
- 2-1/2"x5" Stacked Three-Leaf Blade Bar
- 5/8"x5" Blades, 360° Swing
- Front/Rear Deflectors
- Standard (1) year limited parts and labor warranty.

PRODUCT ORDER CODE	DESCRIPTION	APPRX. WEIGHT		LIST PRICE
	Versa Boom Base Unit *(One Choice Required)*			
04953001	17' Versa-Boom (Joystick Control)	3850		40,076
04951001	17' Versa-Boom (Cable Control)	3800		31,954
04953005	20' Versa-Boom (Joystick Control)	4050		41,614
04951005	20' Versa-Boom (Cable Control)	4000		34,018
04953009	23' Versa-Boom (Joystick Control)	4150		42,977
04951009	23' Versa-Boom (Cable Control)	4100		35,422
	Mower Head *(One Choice Required)* ***See Options Below for Extra Mower Head Options***			
02974676	60" Boom-Axe with Bar	820		10,689
02974680	50" Boom-Axe with Pan	810		10,963
02974681	50" Boom-Axe with Bar	750		10,436
02970299	48" Flail Axe	700		12,515
02963870	60" SHD Flail	760		11,608
02974204	90" Buzzbar Head	1098		16,467
02979250	69" Buzzbar Head	705		13,844
02979266	48" Buzzbar Head	550		11,099
02972145	5' Timbercat	440		12,280
02972146	7' Timbercat	520		13,077
02215421	Ditcher Head (Mounted to Lift Section)	600		12,869
02215422	Ditcher Head - Reverse Rotation (Mounted to Lift Section)	600		12,869
02985350	Ditcher Head (Hitch-Post Mounted)			12,869
	Options			
02897300	Additional Operators and Parts Manuals			54
02976534	Quick Hitch Kit*			2,635
02976535	Hydraulic Kit for Quick Hitch Head**			468
02975647	Flail-Axe Jack Stand Kit***			342
02977500	60" SHD Flail Jack Stand Kit****			265

** Includes all components to convert boom and (1) head to Quick Hitch*
*** Required to convert additional heads to Quick Hitch*
**** Required to level Flail-Axe for Quick Hitch*
***** Required to level SHD Flail for Quick Hitch*

VERSA BOOM

17", 20", 23' Articulated Models

F.O.B. Seguin, TX

PRODUCT ORDER CODE	DESCRIPTION	APPRX. WEIGHT		LIST PRICE
	Options - *Continued*			
02990399	Ditcher Stand Kit ***			680
02990405	Hose Kit, Tractor Aux to Chute*****			805
02959639	Caster Wheel Kit, Super Heavy Duty Flail	24		1,515
02966905	Accumulator Kit Option	25		1,367
02982874	Case-IH JXU Pump Guard Kit NH TL-A Pump Guard Kit			453
02982767	Case-IH JXU Replacement Battery (Factory Mount Only) NH TL-A Replacement Battery (Factory Mount Only)			202
02981109	Case-IH MXU & Maxxum Rear ROPS Screen Kit NH TS-A & T6000 Rear ROPS Screen Kit			449
02980652	Case-IH MXU & Maxxum Pump Guard Kit NH TS-A & T6000 Pump Guard Kit			453
02980929	Case-IH MXU & Maxxum Aluminum ROPS Canopy NH TS-A & T6000 Aluminum ROPS Canopy			1,000
02981353	NH TL Pump Guard Kit			453
02977499	JD 6015, 6020 & 6030 Rear Cab Screen Kit JD 7020 & 7030 "Prem/Mid-Spec" Rear Cab Screen Kit			791
02979486	JD 6015 & 6020 Rear ROPS Screen Kit			449
02979080	JD 6015, 6020 & 6030 Pump Guard Kit JD 7020 & 7030 "Prem/Mid-Spec" Pump Guard Kit			453
02976333	JD 6015 & 6020 Aluminum ROPS Canopy			1,000
02976500	JD 7020 Wheel Weight Adapter Kit (34" Flanged Axle)			442
02978473	JD 7020 & 7030 "Prem" Whl Wt Adapter Kit (38" Flanged Axle)			442
02978103	JD 7020 & 7030 "Prem" Whl Wt Adapter (38" Rack & Pinion)			442
	Kits Below Are To Interchange A Versa Mower/Head With Your Existing Boom- Requires Purchase of the Versa Mower Head Separately (See Versa Mower Page)			**Also**
02964297	Versa Boom to Mower Interchange Extension Arm- Non Breakaway			3,908
02965429	Versa Boom to Mower Interchange Extension Arm- Breakaway Type			5,044
02976671	Additional 408 lbs. Kit for 1300 lbs. Wheel Weight	408		1,593
02976670	Additional 680 lbs. Kit for 1300 lbs. Wheel Weight	680		2,363
02963038	Mounting Labor & Oil			7,197
02791800	Special Mower Paint			1,243
02968967	Special Tractor Paint			5,537
00889899VB	Additional 12 Month Warranty (00889899)			4,014

**** Required to level Ditcher for Quick Hitch*
****** Required to operate Ditcher Head Discharge Chute*

VERSA BOOM

17", 20", 23' Mount Kits

F.O.B. Seguin, TX

TRACTOR DESCRIPTION	MOUNT KIT	MAXIMUM TIRE SIZE		
		2WD Front	4WD Front	Rear
Case IH				
Case-IH Farmall 85U/95U/105U Cab/2&4wd (Cable/Fender Tank)	02986803	10.00-16	12.4-24	18.4-30
Case-IH Farmall 85U/95U/105U Cab/2&4wd (Joystick/Fender Tank)	02987108	10.00-16	12.4-24	18.4-30
Case-IH Farmall 85U/95U/105U ROPS/2&4wd (Fender Tank)	02989928	10.00-16	12.4-24	18.4-30
Case-IH JX1080U/1090U/1100U Cab/2&4wd (Cable/Fender Tank)	02982098	10.00-16	12.4-24	18.4-30
Case-IH JX1080U/1090U/1100U Cab/2&4wd (Joystick/Fender Tank)	02984094	10.00-16	12.4-24	18.4-30
Case-IH JX1080U/1090U/1100U ROPS/2&4wd (Fender Tank)	02985822	10.00-16	12.4-24	18.4-30
Case-IH Maxxum 115/125/125 Pro/140 Pro Cab/2&4wd (Cable/Fender Tank)	02981137	10.00-16	12.4-24	18.4-30
Case-IH Maxxum 115/125/125 Pro/140 Pro Cab/2&4wd (Joystick/Fender Tank)	02982226	10.00-16	12.4-24	18.4-30
Case-IH Maxxum 115/125/125 Pro/140 Pro Cab 2/4wd (Factory Loader Valve/Cable Control/Fender Tank)	02982832	12.4-24	12.4-24	18.4-34
Case-IH Maxxum 115/125/125 Pro/140 Pro Cab/2&4wd (540 PTO Pump/Joystick/Fender Tank)	02989499	12.4-24	12.4-24	18.4-34
Case-IH Maxxum 115/125/125 Pro/140 Pro ROPS/2&4wd (Fender Tank)	02984650	10.00-16	12.4-24	18.4-30
Case-IH MXU100/110 Cab/2wd (Cable/Fender Tank)	02982228	10.00-16	N/A	18.4-34
Case-IH MXU100/110 Cab/2wd (Joystick/Fender Tank)	02981898	10.00-16	N/A	18.4-34
Case-IH MXU100/110 Cab/4wd (Cable/Fender Tank)	02982809	N/A	12.4-24	18.4-30
Case-IH MXU115/125/130/135 Cab/2&4wd (Cable/Fender Tank)	02981137	10.00-16	12.4-24	18.4-34
Case-IH MXU115/125/130/135 Cab/2&4wd (Joystick/Fender Tank)	02982226	10.00-16	12.4-24	18.4-34
Case-IH MXU115/125/130/135 ROPS/2&4wd (Cable/Fender Tank)	02984650	10.00-16	12.4-24	18.4-34
John Deere				
JD 5083E/5093E/5101E Cab/4wd (MY2011- Prior- New Rail Design- Joystick Control/Fender Tank)- **17'-20' Booms Only**	TBA	N/A	12.4-24	18.4-30
JD 5083E/5093E/5101E Cab/4wd (MY2012- New Rail Design- Joystick Control/Fender Tank)- **17'-20' Booms Only**	02991936	N/A	12.4-24	18.4-30
JD 5085/5095/5105M- Series Cab 2wd (MY2012- New Rail Design- Cable Control/Fender Tank)- **17'-20' Booms Only**	02991902	11.0L-15	N/A	16.9-30
JD 5085/5095/5105M- Series Cab 4wd (MY2012- New Rail Design- Cable Control/Fender Tank)- **17'-20' Booms Only**	02991900	N/A	12.4-24	16.9-30
JD 5085/5095/5105M- Series Cab 4wd (MY2012- New Rail Design- Joystick Control/Fender Tank)- **17'-20' Booms Only**	02991856	N/A	12.4-24	16.9-30
JD 5425/5525/5625 Cab/2&4wd (Cable/Fender Tank)	02983913	7.50-16	11.2-24	16.9-30
JD 5425/5525/5625 Cab/2&4wd (Joystick/Fender Tank)	02983243	7.50-16	11.2-24	16.9-30
JD 5603 Cab/4wd (Cable/Fender Tank)	02986167	N/A	12.4-24	18.4-30
JD 5603 Cab/4wd (Joystick/Fender Tank)	02986509	N/A	12.4-24	18.4-30
JD 6110/6210/6310/6405/6410 Cab 2wd (Cable Control/Fender Tank)	02973845	10.5-80/18	N/A	18.4-30
JD 6110/6210/6310/6405/6410 Cab 2wd (Joystick Control/Fender Tank)	02991250	10.5-80/18	N/A	18.4-30
JD 6110/6210/6310/6405/6410 Cab 4wd (Cable Control/Fender Tank)	02973849	N/A	12.4-24	18.4-30
JD 6215/6415 Cab/2&4wd (Cable/Mid-Mt Tank)	02979218	10.00-16	12.4-24	18.4-34
JD 6215/6415 Cab/2&4wd (Cable/Fender Tank)	02981500	10.00-16	12.4-24	18.4-34
JD 6215/6415 Cab/2&4wd (Joystick/Mid-Mt Tank)	02981036	10.00-16	12.4-24	18.4-34
JD 6215/6415 ROPS/2&4wd (Mid-Mt Tank)	02980731	10.00-16	12.4-24	18.4-34
JD 6120/6220/6320/6420 (Tier II) Cab/2&4wd (Cable/Mid-Mt Tank)	02979218	10.00-16	12.4-24	18.4-34
JD 6120/6220/6320/6420 (Tier II) Cab/2&4wd (Cable/Fender Tank)	02981500	10.00-16	12.4-24	18.4-34
JD 6120/6220/6320/6420 (Tier II) Cab/2&4wd (Joystick/Mid-Mt Tank)	02979290	10.00-16	12.4-24	18.4-34
JD 6120/6220/6320/6420 (Tier II) Cab/2&4wd (Joystick/Fender Tank)	02986353	10.00-16	12.4-24	18.4-34
JD 6120/6220/6320/6420 (Tier II) ROPS/2&4wd (Cable/Mid-Mt Tank)	02980731	10.00-16	12.4-24	18.4-34
JD 6230/6330/6430 "Mid-Spec" Cab/2&4wd (Cable/Fender Tank)	02986747	10.00-16	12.4-24	18.4-34
JD 6230/6330/6430 "Mid-Spec" Cab/2&4wd (Joystick/Fender Tank)	02986711	10.00-16	12.4-24	18.4-34
JD 6230/6330/6430 "Mid-Spec" ROPS 2wd (Fender Tank)	02987954	11L-16	N/A	18.4-34
JD 6230/6330/6430 "Mid-Spec" ROPS 4wd (Fender Tank)	02990042	N/A	12.4-24	18.4-34
JD 6230/6330/6430 "Premium" Cab/2&4wd (Cable/Fender Tank)	02986184	10.00-16	12.4-24	18.4-34
JD 6230/6330/6430 "Premium" Cab/2&4wd (Joystick/Fender Tank)	02985260	10.00-16	12.4-24	18.4-34
JD 6615/6715 Cab/2&4wd (Cable/Mid-Mt Tank)	02979858	11.00-16	13.6-24	18.4-34
JD 6615/6715 Cab/2&4wd (Joystick/Mid-Mt Tank)	02979925	11.00-16	13.6-24	18.4-34
JD 7220/7320/7420/7520 Cab/2&4wd (Cable/Mid-Mt Tank)	02979858	11.00-16	13.6-28	18.4-38
JD 7220/7320/7420/7520 Cab/2&4wd (Joystick/Mid-Mt Tank)	02979925	11.00-16	13.6-28	18.4-38

VERSA BOOM

17", 20", 23' Mount Kits

F.O.B. Seguin, TX

TRACTOR DESCRIPTION	MOUNT KIT	MAXIMUM TIRE SIZE		
		2WD Front	4WD Front	Rear
John Deere				
JD 7130/7230 "Mid Spec" Cab 2/4wd (w/55 gal. fuel tank/Cable/Fender Tank)	02987878	11.00-16	13.6-28	18.4-38
JD 7130/7230 "Mid Spec" Cab 2/4wd (w/55 gal. fuel tank/Joystick/Fender Tank)	02987277	11.00-16	13.6-28	18.4-38
JD 7130/7230 "Mid Spec" Cab 2/4wd (w/673 Loader Pkg/ 55 gal. fuel tank/Joystick/Fender Tank)	02991416	11.00-16	13.6-28	18.4-38
JD 7130/7230 "Mid Spec" ROPS 2/4wd (w/55 gal. fuel tank/Joystick/Fender Tank)	02987526	11.00-16	13.6-28	18.4-38
Massey Ferguson				
MF 2650/2660 Cab 4wd (Joystick Control/Fender Tank)	02991688	N/A	11.2-24	16.9-30
New Holland				
NH T5040/5050/5060/5070 Cab 2/4wd (Cable/Fender Tank)	02986803	10.00-16	12.4-24	18.4-30
NH T5040/5050/5060/5070 Cab 2/4wd (Joystick/Fender Tank)	02987108	10.00-16	12.4-24	18.4-30
NH T5040/5050/5060/5070 ROPS 2/4wd (Fender Tank)	02989928	10.00-16	12.4-24	18.4-30
NH T6010/6020/6040/6060 Cab/2wd (Cable/Fender Tank)	02985514	10.00-16	N/A	18.4-34
NH T6010/6020/6040/6060 Cab/2wd (Joystick/Fender Tank)	02988197	10.00-16	N/A	18.4-34
NH T6010/6020/6040/6060 Cab/4wd (Cable Control/Fender Tank)	02991887	N/A	12.4-24	18.4-30
NH T6010/6020/6040/6060 Cab/4wd (Joystick/Fender Tank)	02987018	N/A	12.4-24	18.4-30
NH T6010/6020 "Delta" ROPS/2wd (Fender Tank)	02986206	10.00-16	N/A	18.4-34
NH T6010/6020 Cab 2wd Models with Bar-style axles (Joystick Control/Fender Tank)	02990053	10.00-16	N/A	18.4-34
NH T6030/6050/6070 Cab/2&4wd (Flanged Wheel Axle/Cable/Fender Tank)	02981137	10.00-16	12.4-24	18.4-34
NH T6030/6050/6070 Cab/2&4wd (Rack & Pinion Axle/Cable/Fender Tank)	02991003	10.00-16	12.4-24	18.4-34
NH T6030/6050/6070 Cab/2&4wd (Joystick/Fender Tank)	02982226	10.00-16	12.4-24	18.4-34
NH T6030/6050/6070 Cab 2/4wd (Factory Loader Valve/Cable Control/Fender Tank)	02982832	10.00-16	12.4-24	18.4-34
NH T6030/6050/6070 Cab/2&4wd (540 PTO Pump/Joystick/Fender Tank)	02989499	10.00-16	12.4-24	18.4-34
NH T6030/6050 ROPS/2&4wd (Fender Tank)	02984650	10.00-16	12.4-24	18.4-34
NH TL80/90/100 Cab/2&4wd (Cable/Fender Tank)	02980259	10.00-16	12.4-24	18.4-30
NH TL80A/90A/100A Cab/2&4wd (Cable/Fender Tank)	02982098	10.00-16	12.4-24	18.4-30
NH TL80A/90A/100A Cab/2&4wd (Joystick/Fender Tank)	02984094	10.00-16	12.4-24	18.4-30
NH TL80A/90A/100A ROPS/2&4wd (Fender Tank)	02985822	10.00-16	12.4-24	18.4-30
NH TS100A/110A Cab/2wd (Cable/Fender Tank)	02982228	10.00-16	N/A	18.4-34
NH TS100A/110A Cab/2wd (Joystick/Fender Tank)	02981898	10.00-16	N/A	18.4-34
NH TS100A/110A Cab/4wd (Cable/Fender Tank)	02982809	N/A	12.4-24	18.4-30
NH TS115A/125A/130A/135A Cab/2&4wd (Cable/Fender Tank)	02981137	10.00-16	12.4-24	18.4-30
NH TS115A/125A/130A/135A Cab/2&4wd (Joystick/Fender Tank)	02982226	10.00-16	12.4-24	18.4-30
NH T6030/6050/6070 Cab 2/4wd (Factory Loader Valve/Cable Control/Fender Tank)	02982832	10.00-16	12.4-24	18.4-34
NH TS115A/125A/130A/135A Cab/2&4wd (540 PTO Pump/Joystick/Fender Tank)	02989499	10.00-16	12.4-24	18.4-34
NH TS115/125/130/135- A Series Cab 2/4wd (Factory Loader Valve/Joystick/Fender Tank)	02982832	10.00-16	12.4-24	18.4-34
NH TS115A/125A/130A/135A ROPS/2&4wd (Fender Tank)	02984650	10.00-16	12.4-24	18.4-34
NH TS6020/6030 Cab/2wd (Cable/Fender Tank)	02991179	10.00-16	N/A	18.4-34
NH TS6020/6030 ROPS/2wd (Fender Tank)	02989952	10.00-16	N/A	18.4-34

OTHER SPECIFICATIONS

(1) Always use the maximum tire size for favorable ground clearance.
(2) Tractors should not be ordered with armrest-integrated controls.
(3) Tractors must be equipped with flanged rear rims unless otherwise noted.
(4) Right handrail removal may be necessary for boom transport clearance.
(5) John Deere tractors must include a standard through-hood exhaust.
(6) Case-New Holland mount kits include an exhaust relocation feature.
(7) Case-IH JX-U & Farmall U and New Holland TL-A & T5000 series tractors require a smaller replacement battery which is not included. We recommend using Exide® #34R-84N.

VERSA PRO

21'8" Flail Mower

F.O.B. Seguin, TX

BASE UNIT SPECIFICATIONS

- 21'8" Overall Cutting Width
- 3/8" Box Fully Welded Frame
- 19-Gallon Reservoir with 10 Micron Filtration
- Tandem Piston Pumps Rated @ 48 GPM @ 3800 PSI
- Standard (1) year limited parts and labor warranty

WING MOWER SPECIFICATIONS

- 88" Cutting Width
- Two 10-Gauge Unitized Cutter Housings
- 1/2" Inboard & 5/16" Outboard Side Plates
- Replaceable Skid Shoes
- 4-1/2" x 5/16" Wall Cuttershaft
- 1-5/16" Bore Greaseable, Self-aligning Cuttershaft Bearings
- 53 HP Motor
- Belt Drive From Motor To Cuttershaft with Automatic Spring Tension
- 6" Adjustable Rear Roller
- 1/2" to 6" Cutting Height
- Available in Fine or Coarse-Cut
- Front and Rear Safety Deflectors
- Automatic Cut-Off Switches
- Wing Cylinder Capable of 45 degrees Down & 90° Up

FRONT MOWER SPECS

- 96" Cutting Width
- 10-Gauge Unitized Cutter Housing
- 5/16" Side Plates
- 4-1/2" x 5/16" Wall Cuttershaft
- 1-5/16" Bore Greaseable, Self-aligning Cuttershaft Bearings
- 60 HP Gearbox
- 6" Adjustable Rear Roller
- 1/2" to 6" Cutting Height
- Available in Fine or Coarse-Cut
- Front and Rear Safety Deflectors
- Belt Drive From Gearbox To Cuttershaft with Automatic Spring Tension

PRODUCT ORDER CODE	DESCRIPTION	APPRX. WEIGHT		LIST PRICE
VERSA PRO FLAIL BASE UNIT *(One Choice Required)*				
04903031	21'8" Versa Pro Flail, Fine-Cut Knives, Rev Rot, NH TV140	3324		58,067
04903026	21'8" Versa Pro Flail, Coarse-Cut Knives, NH TV140	3263		58,729
04903027	21'8" Versa Pro Flail, Fine-Cut w/Ring Knives, NH TV140	3278		58,972
04903028	21'8" Versa Pro Flail, Extreme Service Knives, NH TV140	3269		58,893
04903030	21'8" Versa Pro Flail, Fine-Cut Knives, NH TV140	3324		58,067
OPTIONS				
803350	Additional Operators and Parts Manuals			54
02963046	Mounting Labor & Oil			4,273
02791800VP	Special Mower Paint (02791800)			1,274
00889899VP	Additional 12 Month Warranty (00889899)			4,014

ALAMO® INDUSTRIAL

BUILT SHARPER®

1502 East Walnut St.
Seguin, TX 78155

Sales & Marketing
800-882-5762 830-379-0864 fax
support@alamo-industrial.com

Warranty Registration/Claims
www.alamoparts.com

Return Authorizations
Online Part Orders
Technical Information
www.alamoparts.com
800-356-6286 800-322-5041 fax

www.alamo-industrial.com

MEMBER OF THE ALAMO GROUP
ALWAYS ON THE CUTTING EDGE®

WG32A, 14.5 HP* Commercial Gear Drive Walk-Behind Mower with 32 in. Deck

Equipment for Base Machine

14.5 HP*
Vertical-Shaft Air Cooled Engine (603cc, 36.8 cu. in)
Full Pressure Lubrication System with Replaceable Oil Filter
Operator Presence System
Gear Drive Transmission
5 Forward Gears 1 Reverse Gear with Reverse Assist
Neutral Start
Dual Element Air Cleaner
32 In. Fully Floating Commercial Side Discharge Mower Deck
7-Gauge Fabricated Steel Mower Deck with Aluminum Spindles
1.5-4.75 In. Height of Cut with 13 Cutting Positions
Pistol Grip Direction Control
Multi-Position Recoil Start
5.4 MPH Mowing Speed
5.8 U.S. Gallon Fuel Capacity
13x5-6 4-Ply Pneumatic Rear Tires
9x3.5-4 Front Caster Tires
Electric PTO Clutch
English/Spanish Operator's Safety Video and Labels
ANSI Certified B71.4 for Safety
*The engine horsepower and torque information are provided by the engine manufacturer to be used for comparison purposes only. Actual operating horsepower and torque will be less. Refer to the engine manufacturer's web site for additional information.

CODE	ATTACHMENT IDENTIFIER	DESCRIPTION	SUGGESTED LIST PRICE USD ($)

Select One Code From Each Required Category

BASE MACHINE

F.O.B. Davenport, Iowa

1332TC		WG32A, 14.5 HP* Commercial Gear Drive Walk-Behind Mower with 32 in. Deck	3,499.00

DESTINATION

0202		United States and Canada	In Base Price
0230		Australia and New Zealand	Same Price
0195		Mexico	Same Price
0250		Other	Same Price

ATTACHMENTS FOR FIELD CONVERSION

Mower Deck and Mower Deck Attachments:

	TCB11738	32 In. Mulch Kit	211.86
	BTC10643	Grass Collector, 3 Cu Ft.	329.56

WG36A, 14.5 HP* Commercial Gear Drive Walk-Behind Mower with 36 In. Deck

Equipment for Base Machine

14.5 HP*
Vertical-Shaft Air Cooled Engine (603cc, 36.8 cu. in)
Full Pressure Lubrication System with Replaceable Oil Filter
Operator Presence System
Peerless Gear Drive Transmission
5 Forward Gears 1 Reverse Gear with Reverse Assist
Neutral Start
Dual Element Air Cleaner
36 In. Fully Floating Commercial Side Discharge Mower Deck
7-Gauge Fabricated Steel Mower Deck with Aluminum Spindles
1.5-4.75 In. Height of Cut with 13 Cutting Positions
Pistol Grip Direction Control
Multi-Position Recoil Start
5.4 MPH Mowing Speed
5.8 U.S. Gallon Fuel Capacity
13x5-6 4-Ply Pneumatic Rear Tires
9x3.5-4 Front Caster Tires
Electric PTO Clutch
English/Spanish Operator's Safety Video and Labels
ANSI Certified B71.4 for Safety
*The engine horsepower and torque information are provided by the engine manufacturer to be used for comparison purposes only. Actual operating horsepower and torque will be less. Refer to the engine manufacturer's web site for additional information.

CODE	ATTACHMENT IDENTIFIER	DESCRIPTION	SUGGESTED LIST PRICE USD ($)

Select One Code From Each Required Category

BASE MACHINE

F.O.B. Davenport, Iowa

1342TC		WG36A, 14.5 HP* Commercial Gear Drive Walk-Behind Mower with 36 In. Deck	3,699.00

DESTINATION

0202		United States and Canada	In Base Price
0230		Australia and New Zealand	Same Price
0195		Mexico	Same Price
0250		Other	Same Price

ATTACHMENTS FOR FIELD CONVERSION

Mower Deck and Mower Deck Attachments:

	TCB11739	36 In. Mulch Kit	211.86
	BTC10643	Grass Collector, 3 Cu Ft.	329.56

WG48A, 14.5 HP* Commercial Gear Drive Walk-Behind Mower with 48 In. Deck

Equipment for Base Machine

14.5 HP*
Vertical-Shaft Air Cooled Engine (603cc, 36.8 cu. in)
Full Pressure Lubrication System with Replaceable Oil Filter
Operator Presence System
Peerless Gear Drive Transmission
5 Forward Gears 1 Reverse Gear with Reverse Assist
Neutral Start
Dual Element Air Cleaner
48 In. Fully Floating Commercial Side Discharge Mower Deck
7-Gauge Fabricated Steel Mower Deck with Aluminum Spindles
1.5-4.75 In. Height of Cut with 13 Cutting Positions
Pistol Grip Direction Control
Multi-Position Recoil Start
5.4 MPH Mowing Speed
5.8 U.S. Gallon Fuel Capacity
13x6.5-6 4-Ply Pneumatic Rear Tires
9x3.5-4 Front Caster Tires
Electric PTO Clutch
English/Spanish Operator's Safety Video and Labels
ANSI Certified B71.4 for Safety
*The engine horsepower and torque information are provided by the engine manufacturer to be used for comparison purposes only. Actual operating horsepower and torque will be less. Refer to the engine manufacturer's web site for additional information.

CODE	ATTACHMENT IDENTIFIER	DESCRIPTION	SUGGESTED LIST PRICE USD ($)

Select One Code From Each Required Category

BASE MACHINE

F.O.B. Davenport, Iowa

1352TC		WG48A, 14.5 HP* Commercial Gear Drive Walk-Behind Mower with 48 In. Deck	3,999.00

DESTINATION

0202		United States and Canada	In Base Price
0230		Australia and New Zealand	Same Price
0195		Mexico	Same Price
0250		Other	Same Price

ATTACHMENTS FOR FIELD CONVERSION

Mower Deck and Mower Deck Attachments:

	TCB11740	48 In. Mulch Kit	245.03
	BTC10643	Grass Collector, 3 Cu Ft.	329.56

WH36A, 14.5 HP* Twin Loop Control Commercial Hydrostatic Drive Walk-Behind Mower with 36 In. Deck

Equipment for Base Machine

14.5* HP Kawasaki FS Vertical-Shaft Air Cooled Engine (603cc, 36.8 cu. in)
Full Pressure Lubrication System with Replaceable Oil Filter
Electric Start
6-Position Hydrostatic Adjustment
10cc Hydro-Gear Pumps
Parker-Ross Wheel Motors
Low Center of Gravity
Operator Presence System
Dual Hydrostatic Wheel Drive
Dual Element Air Cleaner
36 In. Fully Floating Commercial Side Discharge Mower Deck
7-Gauge Fabricated Steel Mower Deck
Aluminum Spindle Housings
1.5-5.0 In. Height of Cut with 14 Cut Height Settings
Twin Loop Controls with Speed Index Bar and Reverse Index Bar
Adjustable Height Operator Station
7 MPH Mowing Speed
3 MPH Reverse Speed
5.8 U.S. Gallon Fuel Capacity
16x6.5-8 Rear Tires
9x3.5-4 Front Caster Tires
Electric PTO Clutch
Tire Engaging Park Brake
English/Spanish Operator's Safety Video and Labels
*The engine horsepower and torque information are provided by the engine manufacturer to be used for comparison purposes only. Actual operating horsepower and torque will be less. Refer to the engine manufacturer's web site for additional information.

CODE	ATTACHMENT IDENTIFIER	DESCRIPTION	SUGGESTED LIST PRICE USD ($)

Select One Code From Each Required Category

BASE MACHINE

F.O.B. Davenport, Iowa

1390TC		WH36A, 14.5 HP* Twin Loop Control Commercial Hydrostatic Drive Walk-Behind Mower with 36 In. Deck	6,399.00

DESTINATION

0202		United States and Canada	In Base Price
0230		Australia and New Zealand	Same Price
0195		Mexico	Same Price
0250		Other	Same Price

ATTACHMENTS FOR FIELD CONVERSION

		Miscellaneous:	
	TCB11744	Sulky	541.41
		Mower Deck and Mower Deck Attachments:	
	TCB11739	36 In. Mulch Kit	211.86
	BTC10643	Grass Collector, 3 Cu Ft.	329.56
		Weights:	
	BTC10484	Weight Kit *(Model Year 2013 and newer)*	114.49

WHP36A, 14.5 HP* Pistol Grip Control Commercial Hydrostatic Drive Walk-Behind Mower with 36 In. Deck

Equipment for Base Machine

14.5* HP Kawasaki FS Vertical-Shaft Air Cooled Engine (603cc, 36.8 cu. in)
Full Pressure Lubrication System with Replaceable Oil Filter
Electric Start
Dual Element Air Cleaner
10cc Hydro-Gear Pumps
6-Position Hydrostatic Adjustment
Parker-Ross Wheel Motors
Low Center of Gravity
Operator Presence System
Dual Hydrostatic Wheel Drive
36 In. Fully Floating Commercial Side Discharge Mower Deck
7-Gauge Fabricated Steel Mower Deck
Aluminum Spindle Housings
1.5-5.0 In. Height of Cut with 14 Cut Height Settings
Pistol Grip Direction Control
Adjustable Height Operator Station
7 MPH Mowing Speed
3 MPH Reverse Speed
5.8 U.S. Gallon Fuel Capacity
16x6.5-8 Rear Tires
9x3.5-4 Front Caster Tires
Electric PTO Clutch
Tire Engaging Park Brake
English/Spanish Operator's Safety Video and Labels
*The engine horsepower and torque information are provided by the engine manufacturer to be used for comparison purposes only. Actual operating horsepower and torque will be less. Refer to the engine manufacturer's web site for additional information.

CODE	ATTACHMENT IDENTIFIER	DESCRIPTION	SUGGESTED LIST PRICE USD ($)
		Select One Code From Each Required Category	
		BASE MACHINE	
		F.O.B. Davenport, Iowa	
1391TC		WHP36A, 14.5 HP* Pistol Grip Control Commercial Hydrostatic Drive Walk-Behind Mower with 36 In. Deck	6,399.00
		DESTINATION	
0202		United States and Canada	In Base Price
0230		Australia and New Zealand	Same Price
0195		Mexico	Same Price
0250		Other	Same Price
		ATTACHMENTS FOR FIELD CONVERSION	
		Miscellaneous:	
	TCB11744	Sulky	541.41
		Mower Deck and Mower Deck Attachments:	
	TCB11739	36 In. Mulch Kit	211.86
	BTC10643	Grass Collector, 3 Cu Ft.	329.56
		Weights:	
	BTC10484	Weight Kit *(Model Year 2013 and newer)*	114.49

WH48A, 18.5 HP* Twin Loop Control Commercial Hydrostatic Drive Walk-Behind Mower with 48 In. Deck

Equipment for Base Machine

18.5 HP*
Vertical-Shaft Air Cooled Engine (603cc, 36.8 cu. in)
Full Pressure Lubrication System with Replaceable Oil Filter
Electric Start
10cc Hydro-Gear Pumps
6-Position Hydrostatic Adjustment
Parker-Ross Wheel Motors
Low Center of Gravity
Operator Presence System
Dual Hydrostatic Wheel Drive
Dual Element Air Cleaner
48 In. Fully Floating Commercial Side Discharge Mower Deck
7-Gauge Fabricated Steel Mower Deck
Aluminum Spindle Housings
1.5-5.0 In. Height of Cut with 14 Cut Height Settings
4 Anti-Scalp Wheels
Twin Loop Controls with Speed Index Bar and Reverse Index Bar
Adjustable Height Operator Station
7 MPH Mowing Speed
3 MPH Reverse Speed
5.8 U.S. Gallon Fuel Capacity
16x7.5-8 Rear Tires
9x3.5-4 Front Caster Tires
Electric PTO Clutch
Tire Engaging Park Brake
English/Spanish Operator's Safety Video and Labels

*The engine horsepower and torque information are provided by the engine manufacturer to be used for comparison purposes only. Actual operating horsepower and torque will be less. Refer to the engine manufacturer's web site for additional information.

CODE	ATTACHMENT IDENTIFIER	DESCRIPTION	SUGGESTED LIST PRICE USD ($)

Select One Code From Each Required Category

BASE MACHINE

F.O.B. Davenport, Iowa

1290TC		WH48A, 18.5 HP* Twin Loop Control Commercial Hydrostatic Drive Walk-Behind Mower with 48 In. Deck	7,299.00

DESTINATION

0202		United States and Canada	In Base Price
0230		Australia and New Zealand	Same Price
0195		Mexico	Same Price
0250		Other	Same Price

ATTACHMENTS FOR FIELD CONVERSION

		Miscellaneous:	
	TCB11744	Sulky	541.41
		Mower Deck and Mower Deck Attachments:	
	TCB11740	48 In. Mulch Kit	245.03
	BTC10643	Grass Collector, 3 Cu Ft.	329.56
		Weights:	
	BTC10484	Weight Kit *(Model Year 2013 and newer)*	114.49

WHP48A, 18.5 HP* Pistol Grip Control Commercial Hydrostatic Drive Walk-Behind Mower with 48 In. Deck

Equipment for Base Machine

18.5 HP*
  Vertical-Shaft Air Cooled
  Engine (603cc, 36.8 cu. in)
Full Pressure Lubrication
  System with Replaceable
Oil Filter
Electric Start
Dual Element Air Cleaner
10cc Hydro-Gear Pumps
  6-Position Hydrostatic
  Adjustment
Parker-Ross Wheel Motors
Low Center of Gravity
Operator Presence System
Dual Hydrostatic Wheel Drive
48 In. Fully Floating
  Commercial Side Discharge
  Mower Deck
7-Gauge Fabricated Steel Mower
Deck
Aluminum Spindle Housings
1.5-5.0 In. Height of Cut with
  14 Cut Height Settings
4 Anti-Scalp Wheels
Pistol Grip Direction Control
Adjustable Height Operator
  Station
7 MPH Mowing Speed
3 MPH Reverse Speed
5.8 U.S. Gallon Fuel Capacity
16x7.5-8 Rear Tires
9x3.5-4 Front Caster Tires
Electric PTO Clutch
Tire Engaging Park Brake
English/Spanish Operator's
Safety Video and Labels

*The engine horsepower and torque information are provided by the engine manufacturer to be used for comparison purposes only. Actual operating horsepower and torque will be less. Refer to the engine manufacturer's web site for additional information.

CODE	ATTACHMENT IDENTIFIER	DESCRIPTION	SUGGESTED LIST PRICE USD ($)

Select One Code From Each Required Category

BASE MACHINE

F.O.B. Davenport, Iowa

1291TC		WHP48A, 18.5 HP* Pistol Grip Control Commercial Hydrostatic Drive Walk-Behind Mower with 48 In. Deck	7,299.00

DESTINATION

0202		United States and Canada	In Base Price
0230		Australia and New Zealand	Same Price
0195		Mexico	Same Price
0250		Other	Same Price

ATTACHMENTS FOR FIELD CONVERSION

		Miscellaneous:	
	TCB11744	Sulky	541.41
		Mower Deck and Mower Deck Attachments:	
	TCB11740	48 In. Mulch Kit	245.03
	BTC10643	Grass Collector, 3 Cu Ft.	329.56
		Weights:	
	BTC10484	Weight Kit *(Model Year 2013 and newer)*	114.49

WH52A, 18.5 HP* Twin Loop Control Commercial Hydrostatic Drive Walk-Behind Mower with 52 In. Deck

Equipment for Base Machine

18.5 HP*
Vertical-Shaft Air Cooled Engine (603cc, 36.8 cu. in)
Full Pressure Lubrication System with Replaceable Oil Filter
Electric Start
10cc Hydro-Gear Pumps
6-Position Hydrostatic Adjustment
Parker-Ross Wheel Motors
Low Center of Gravity
Operator Presence System
Dual Hydrostatic Wheel Drive
Dual Element Air Cleaner
52 In. Fully Floating Commercial Side Discharge Mower Deck
7-Gauge Fabricated Steel Mower Deck
Aluminum Spindle Housings
1.5-5.0 In. Height of Cut with 14 Cut Height Settings
4 Anti-Scalp Wheels
Twin Loop Controls with Speed Index Bar and Reverse Index Bar
Adjustable Height Operator Station
7 MPH Mowing Speed
3 MPH Reverse Speed
5.8 U.S. Gallon Fuel Capacity
16x7.5-8 Rear Tires
9x3.5-4 Front Caster Tires
Electric PTO Clutch
Tire Engaging Park Brake
English/Spanish Operator's Safety Video and Labels

*The engine horsepower and torque information are provided by the engine manufacturer to be used for comparison purposes only. Actual operating horsepower and torque will be less. Refer to the engine manufacturer's web site for additional information.

CODE	ATTACHMENT IDENTIFIER	DESCRIPTION	SUGGESTED LIST PRICE USD ($)

Select One Code From Each Required Category

BASE MACHINE

F.O.B. Davenport, Iowa

1280TC		WH52A, 18.5 HP* Twin Loop Control Commercial Hydrostatic Drive Walk-Behind Mower with 52 In. Deck	7,699.00

DESTINATION

0202		United States and Canada	In Base Price
0230		Australia and New Zealand	Same Price
0195		Mexico	Same Price
0250		Other	Same Price

ATTACHMENTS FOR FIELD CONVERSION

		Miscellaneous:	
	TCB11744	Sulky	541.41
		Mower Deck and Mower Deck Attachments:	
	TCB11741	52 In. Mulch Kit	267.50
	BTC10643	Grass Collector, 3 Cu Ft.	329.56
		Weights:	
	BTC10484	Weight Kit *(Model Year 2013 and newer)*	114.49

WHP52A, 18.5 HP* Pistol Grip Control Commercial Hydrostatic Drive Walk-Behind Mower with 52 In. Deck

Equipment for Base Machine

18.5 HP*
  Vertical-Shaft Air Cooled
  Engine (603cc, 36.8 cu. in)
Full Pressure Lubrication
  System with Replaceable
Oil Filter
Electric Start
Dual Element Air Cleaner
10cc Hydro-Gear Pumps
  6-Position Hydrostatic
  Adjustment
Parker-Ross Wheel Motors
Low Center of Gravity
Operator Presence System
Dual Hydrostatic Wheel Drive
52 In. Fully Floating
  Commercial Side Discharge
  Mower Deck
7-Gauge Fabricated Steel Mower
Deck
Aluminum Spindle Housings
1.5-5.0 In. Height of Cut with
  14 Cut Height Settings
4 Anti-Scalp Wheels
Pistol Grip Direction Control
Adjustable Height Operator
  Station
7 MPH Mowing Speed
3 MPH Reverse Speed
5.8 U.S. Gallon Fuel Capacity
16x7.5-8 Rear Tires
9x3.5-4 Front Caster Tires
Electric PTO Clutch
Tire Engaging Park Brake
English/Spanish Operator's
Safety Video and Labels

*The engine horsepower and torque information are provided by the engine manufacturer to be used for comparison purposes only. Actual operating horsepower and torque will be less. Refer to the engine manufacturer's web site for additional information.

CODE	ATTACHMENT IDENTIFIER	DESCRIPTION	SUGGESTED LIST PRICE USD ($)

Select One Code From Each Required Category

BASE MACHINE

F.O.B. Davenport, Iowa

1281TC		WHP52A, 18.5 HP* Pistol Grip Control Commercial Hydrostatic Drive Walk-Behind Mower with 52 In. Deck	7,699.00

DESTINATION

0202		United States and Canada	In Base Price
0230		Australia and New Zealand	Same Price
0195		Mexico	Same Price
0250		Other	Same Price

ATTACHMENTS FOR FIELD CONVERSION

		Miscellaneous:	
	TCB11744	Sulky	541.41
		Mower Deck and Mower Deck Attachments:	
	TCB11741	52 In. Mulch Kit	267.50
	BTC10643	Grass Collector, 3 Cu Ft.	329.56
		Weights:	
	BTC10484	Weight Kit *(Model Year 2013 and newer)*	114.49

652B 22HP* Commercial QuikTrak with 52 In. 7-Gauge Fixed Deck

Equipment for Base Machine

22HP*
  Vertical-Shaft Air Cooled Gas Engine 726cc (44.3 cu. in.)
Full Pressure Lubrication System With Replaceable Oil Filter
Heavy Duty Canister Air Cleaner
Dry Replaceable Filter Element with Secondary Safety Element
12 Volt Charge System
12cc Hydro-Gear Transmission Pumps
15 cu. in. Hydro-Gear Wheel Motors
Dual Wheel Parking Brake
Operator Presence System
Platform
52 In. Fixed, Side Discharge
7 Ga. Fabricated Steel Deck
Cast Iron Spindle Housing
1.25 - 5 In. Cutting Heights in 0.25 In. Increments
Dual Lever Direction/Speed Control with Reverse Bar
9.5 MPH Forward / 5.5 MPH Reverse
5.6 U.S. Gallon Fuel Capacity with Fuel Shutoff Valve
20 x 10-8 In. 4PR Turf Drive Tires
11 x 4-5 In. Front Caster Tires
Electric PTO Clutch
Digital Hourmeter
Thick, Insulated Leaning Pad
* @ 3600 RPM engine manufacturer certified gross power tested in accordance with SAE J1995, 726cc. The engine horsepower and torque information is provided by the engine manufacturer to be used for comparison purposes only. Actual operating horsepower and torque will be less. Refer to the engine manufacturer#s web site for additional information.

CODE	ATTACHMENT IDENTIFIER	DESCRIPTION	SUGGESTED LIST PRICE USD ($)

Select One Code From Each Required Category

BASE MACHINE

F.O.B. Davenport, Iowa

2370TC		652B 22HP* Commercial QuikTrak with 52 In. 7-Gauge Fixed Deck	8,465.00

DESTINATION

001A		United States and Canada	In Base Price

ATTACHMENTS FOR FIELD CONVERSION

		Engine:	
	AM108146	Spark Arrester Screen for Muffler	See Parts
		Mower Deck and Mower Deck Attachments:	
	BTC10560	Mulch Kit (52 In.)	309.23

648R 22HP* Commercial QuikTrak with 48 In. 7-Gauge Floating Deck

Equipment for Base Machine

22HP*
Vertical-Shaft Air Cooled Gas Engine 726cc (44.3 cu. in.)
Full Pressure Lubrication System With Replaceable Oil Filter
Heavy Duty Canister Air Cleaner
Dry Replaceable Filter Element with Secondary Safety Element
12 Volt Charge System
Dual Hydrostatic Wheel Drive
12cc Hydro-Gear Transmission
15 cu. in. Hydro-Gear Wheel Motors
Dual Wheel Parking Brake
Operator Presence System
Platform
48 In. Floating, Side Discharge
7 Ga. Fabricated Steel Mower Deck
Cast Iron Spindle Housing
Pin Height of Cut Adjustment
No-tool Lever Assisted Height Cut Adjustment
1.5 - 5 In. Cutting Heights in 0.25 In. Increments
Dual Lever Direction/Speed Control with Reverse Bar
9.5 MPH Forward/5.5 MPH Reverse
5.6 U.S. Gallon Fuel Capacity with Fuel Shutoff Valve
20 x 10-8 In. 4PR Turf Drive Tires
13x6.5-6 Semi Pnuematic Front Caster Tires
Electric PTO Clutch
Digital Hourmeter
Thick, Insulated Leaning Pad
* @ 3600 RPM engine manufacturer certified gross power tested in accordance with SAE J1995, 726cc. The engine horsepower and torque information is provided by the engine manufacturer to be used for comparison purposes only. Actual operating horsepower and torque will be less. Refer to the engine manufacturer#s web site for additional information.

CODE	ATTACHMENT IDENTIFIER	DESCRIPTION	SUGGESTED LIST PRICE USD ($)

Select One Code From Each Required Category

BASE MACHINE

F.O.B. Davenport, Iowa

2320TC	648R 22HP* Commercial QuikTrak with 48 In. 7-Gauge Floating Deck	9,065.00

DESTINATION

001A	United States and Canada	In Base Price

ATTACHMENTS FOR FIELD CONVERSION

	Engine:	
AM108146	Spark Arrester Screen for Muffler	See Parts
	Mower Deck and Mower Deck Attachments:	
BTC10537	Mulch Kit (48 In.)	298.53

652R 23.5HP* Commercial QuikTrak with 52 In. 7-Gauge Floating Deck

Equipment for Base Machine

23.5HP*
Vertical-Shaft Air Cooled Gas Engine 726cc (44.3 cu. in.)
Full Pressure Lubrication System With Replaceable Oil Filter
Heavy Duty Canister Air Cleaner
Dry Replaceable Filter Element with Secondary Safety Element
12 Volt Charge System
Dual Hydrostatic Wheel Drive
12cc Hydro-Gear Transmission
15 cu. in. Hydro-Gear Wheel Motors
Dual Wheel Parking Brake
Operator Presence System
Platform
52 In. Floating, Side Discharge
7 Ga. Fabricated Steel Mower Deck
Cast Iron Spindle Housing
Pin Height of Cut Adjustment
No-tool Lever Assisted Height Cut Adjustment
1.5 - 5 In. Cutting Heights in 0.25 In. Increments
Dual Lever Direction/Speed Control with Reverse Bar
9.5 MPH Forward/5.5 MPH Reverse
5.6 U.S. Gallon Fuel Capacity with Fuel Shutoff Valve
20 x 10-8 In. 4PR Turf Drive Tires
13x6.5-6 Semi Pnuematic Front Caster Tires
Electric PTO Clutch
Digital Hourmeter
Thick, Insulated Leaning Pad
* @ 3600 RPM engine manufacturer certified gross power tested in accordance with SAE J1995, 726cc. The engine horsepower and torque information is provided by the engine manufacturer to be used for comparison purposes only. Actual operating horsepower and torque will be less. Refer to the engine manufacturer#s web site for additional information.

CODE	ATTACHMENT IDENTIFIER	DESCRIPTION	SUGGESTED LIST PRICE USD ($)

Select One Code From Each Required Category

BASE MACHINE

F.O.B. Davenport, Iowa

2310TC		652R 23.5HP* Commercial QuikTrak with 52 In. 7-Gauge Floating Deck	9,465.00

DESTINATION

001A		United States and Canada	In Base Price

ATTACHMENTS FOR FIELD CONVERSION

		Engine:	
	AM108146	Spark Arrester Screen for Muffler	See Parts
		Mower Deck and Mower Deck Attachments:	
	BTC10560	Mulch Kit (52 In.)	309.23

652R EFI 24.6HP* Commercial QuikTrak with 52 In. 7-Gauge Floating Deck

Equipment for Base Machine

24.6 HP*
Vertical-Shaft Air Cooled Electronically Fuel Injected Closed Loop System Engine (45.6 Cu. In.) 747cc, 18.3 kW
Full Pressure Lubrication System With Replaceable Oil Filter
Heavy Duty Canister Air Cleaner
Dry Replaceable Filter Element with Secondary Safety Element
12 Volt Charge System
Dual Hydrostatic Wheel Drive
12cc Hydro-Gear Transmission
15 cu. in. Hydro-Gear Wheel Motors
Dual Wheel Parking Brake
Operator Presence System
Platform
52 In. Floating, Side Discharge
7 Ga. Fabricated Steel Mower Deck
Cast Iron Spindle Housing
Pin Height of Cut Adjustment
No-tool Lever Assisted Height Cut Adjustment
1.5 - 5 In. Cutting Heights in 0.25 In. Increments
Dual Lever Direction/Speed Control with Reverse Bar
9.5 MPH Forward/5.5 MPH Reverse
5.6 U.S. Gallon Fuel Capacity with Fuel Shutoff Valve
20 x 10-8 In. 4PR Turf Drive Tires
13x6.5-6 Semi Pnuematic Front Caster Tires
Electric PTO Clutch
Digital Hourmeter
Thick, Insulated Leaning Pad
* @ 3600 RPM engine manufacturer certified gross power tested in accordance with SAE J1995, 747cc. The engine horsepower and torque information is provided by the engine manufacturer to be used for comparison purposes only. Actual operating horsepower and torque will be less. Refer to the engine manufacturer#s web site for additional information.

CODE	ATTACHMENT IDENTIFIER	DESCRIPTION	SUGGESTED LIST PRICE USD ($)

Select One Code From Each Required Category

BASE MACHINE

F.O.B. Davenport, Iowa

2311TC	652R EFI 24.6HP* Commercial QuikTrak with 52 In. 7-Gauge Floating Deck	9,965.00

DESTINATION

001A	United States and Canada	In Base Price

ATTACHMENTS FOR FIELD CONVERSION

	Engine:	
AM108146	Spark Arrester Screen for Muffler	See Parts
	Mower Deck and Mower Deck Attachments:	
BTC10560	Mulch Kit (52 In.)	309.23

661R 23.5HP* Commercial QuikTrak with 61 In. 7-Gauge Floating Deck

Equipment for Base Machine

23.5HP*
Vertical-Shaft Air Cooled Gas Engine 726cc (44.3 cu. in.)
Full Pressure Lubrication System With Replaceable Oil Filter
Heavy Duty Canister Air Cleaner
Dry Replaceable Filter Element with Secondary Safety Element
12 Volt Charge System
Dual Hydrostatic Wheel Drive
12cc Hydro-Gear Transmission
15 cu. in. Hydro-Gear Wheel Motors
Dual Wheel Parking Brake
Operator Presence System
Platform
61 In. Floating, Side Discharge
7 Ga. Fabricated Steel Mower Deck
Cast Iron Spindle Housing
Pin Height of Cut Adjustment
No-tool Lever Assisted Height Cut Adjustment
1.5 - 5 In. Cutting Heights in 0.25 In. Increments
Dual Lever Direction/Speed Control with Reverse Bar
9.5 MPH Forward/5.5 MPH Reverse
5.6 U.S. Gallon Fuel Capacity with Fuel Shutoff Valve
20 x 10-8 In. 4PR Turf Drive Tires
13x6.5-6 Semi Pnuematic Front Caster Tires
Electric PTO Clutch
Digital Hourmeter
Thick, Insulated Leaning Pad
* @ 3600 RPM engine manufacturer certified gross power tested in accordance with SAE J1995, 726cc. The engine horsepower and torque information is provided by the engine manufacturer to be used for comparison purposes only. Actual operating horsepower and torque will be less. Refer to the engine manufacturer#s web site for additional information.

CODE	ATTACHMENT IDENTIFIER	DESCRIPTION	SUGGESTED LIST PRICE USD ($)

Select One Code From Each Required Category

BASE MACHINE

F.O.B. Davenport, Iowa

2300TC	661R 23.5HP* Commercial QuikTrak with 61 In. 7-Gauge Floating Deck	10,065.00

DESTINATION

001A	United States and Canada	In Base Price

ATTACHMENTS FOR FIELD CONVERSION

	Engine:	
AM108146	Spark Arrester Screen for Muffler	See Parts
	Mower Deck and Mower Deck Attachments:	
BTC10561	Mulch Kit (61 In.)	319.93

661R EFI 24.6HP* Commercial QuikTrak with 61 In. 7-Gauge Floating Deck

Equipment for Base Machine

24.6 HP*
Vertical-Shaft Air Cooled Electronically Fuel Injected Closed Loop System Engine (45.6 Cu. In.) 747cc, 18.3 kW
Full Pressure Lubrication System With Replaceable Oil Filter
Heavy Duty Canister Air Cleaner
Dry Replaceable Filter Element with Secondary Safety Element
12 Volt Charge System
Dual Hydrostatic Wheel Drive
12cc Hydro-Gear Transmission
15 cu. in. Hydro-Gear Wheel Motors
Dual Wheel Parking Brake
Operator Presence System
Platform
61 In. Floating, Side Discharge
7 Ga. Fabricated Steel Mower Deck
Cast Iron Spindle Housing
Pin Height of Cut Adjustment
No-tool Lever Assisted Height Cut Adjustment
1.5 - 5 In. Cutting Heights in 0.25 In. Increments
Dual Lever Direction/Speed Control with Reverse Bar
9.5 MPH Forward/5.5 MPH Reverse
5.6 U.S. Gallon Fuel Capacity with Fuel Shutoff Valve
20 x 10-8 In. 4PR Turf Drive Tires
13x6.5-6 Semi Pnuematic Front Caster Tires
Electric PTO Clutch
Digital Hourmeter
Thick, Insulated Leaning Pad
* @ 3600 RPM engine manufacturer certified gross power tested in accordance with SAE J1995, 747cc. The engine horsepower and torque information is provided by the engine manufacturer to be used for comparison purposes only. Actual operating horsepower and torque will be less. Refer to the engine manufacturer#s web site for additional information.

CODE	ATTACHMENT IDENTIFIER	DESCRIPTION	SUGGESTED LIST PRICE USD ($)

Select One Code From Each Required Category

BASE MACHINE

F.O.B. Davenport, Iowa

2301TC	661R EFI 24.6HP* Commercial QuikTrak with 61 In. 7-Gauge Floating Deck	10,565.00

DESTINATION

001A	United States and Canada	In Base Price

ATTACHMENTS FOR FIELD CONVERSION

	Engine:	
AM108146	Spark Arrester Screen for Muffler	See Parts
	Mower Deck and Mower Deck Attachments:	
BTC10561	Mulch Kit (61 In.)	319.93

997 Commercial L. C. Diesel Max-Frame Z-Trak with 60 In. Side Discharge 7-Iron PRO Deck

Equipment for Base Machine

31 Gross HP Yanmar Horizontal Shaft Direct Injected Liquid Cooled Diesel Engine (81 Cu. In.)
1.5 x 3.0 In. Steel Tubular Frame - 7 Gauge
Full Pressure Lubrication System With Replaceable Oil Filter
Heavy-Duty Canister Air Cleaner; Dual Element, Dry-Type with Safety Element and Air Service Indicator
12 Volt with 40 AMP Regulated Charge System
Dual Hydrostatic Wheel Drive
Kanzaki Dual Unitized Pump
Dual Wheel Parking Brake
Operator Presence System
Folding Two Post ROPS (Roll-Over Protective Structure) and Seat Belt
60 In. 7-Iron PRO Commercial Side Discharge Mower Deck
7-Gauge Stamped Steel Mower Deck
8 In. Aluminum Spindle Housing
One-Touch Dial and Electric Deck Lift Height of Cut Adjustment
Full Floating Suspension Deck 1.5 - 5.0 In. Cutting Heights in 0.25 In. Increments
Dual Lever Direction/Speed Control
Quick-Service Hinged Foot Platform
Fully Enclosed Engine Compartment
Ergonomic Operator Contoured Soft Touch Grips and Integrated Handle Controls
11.5 MPH Mowing Speed
12 U.S. Gallon Fuel Capacity with Fuel Shutoff Valve
26x12-12 In. Square Shoulder 4PR Turf Drive Tires
15x6-6 4PR Front Caster Tires
Right Hand Control Console Cluster
Cup & Tool Holder
Low Oil Pressure Warning Light
Battery Charge Light
Hydraulic PTO Clutch
Digital Hourmeter
Deluxe Comfort Seat with Armrests

CODE	ATTACHMENT IDENTIFIER	DESCRIPTION	SUGGESTED LIST PRICE USD ($)
		Select One Code From Each Required Category	
		BASE MACHINE	
		F.O.B. Raleigh, North Carolina	
095ATC		997 Commercial L. C. Diesel Max-Frame Z-Trak with 60 In. Side Discharge 7-Iron PRO Deck	19,735.00
		ATTACHMENTS - ORDER AS DESIRED	
		European CE Kit:	
9100		European CE 997 Z-Trak with 60 In. SD Mower Deck *This Code Must be Ordered to Receive a 997 Z-Trak Mower Which Meets CE Requirements.*	248.00
		ATTACHMENTS FOR FIELD CONVERSION	
		Engine:	
	TCA19917	B20 Biodiesel Conversion Kit *This kit converts one machine to use B20 Diesel fuel.*	See Parts
		Miscellaneous:	
	TCA18513	Deluxe Comfort Seat with Armrest	See Parts
	TCB11281	Front Light (2) Kit	238.61
	DMB210226	Rear Bumper Kit	464.39
	TCB10915	Suspension Seat Kit	308.16
	TCB11711	X-Large E-Crate Cover	See Parts

997 Commercial L. C. Diesel Max-Frame Z-Trak with 60 In. Side Discharge 7-Iron PRO Deck

Continued

CODE	ATTACHMENT IDENTIFIER	DESCRIPTION	SUGGESTED LIST PRICE USD ($)
		ATTACHMENTS FOR FIELD CONVERSION Continued...	
		Mower Deck and Mower Deck Attachments:	
	DMB210112	Hydraulic Deck Lift *For Model Year '05 Machines Not Equipped with Standard Hydraulic Deck Lift.*	560.69
	TCB10953	Mulch Kit (60 In. 7-Iron, 7-Iron II and 7-Iron PRO)	319.93
	TCB11230	Roller Striping Kit for 60 In. Deck *For Model Year '11 and Later (Serial # 060000-).*	439.77
	TCB10802	Roller Striping Kit for 60 In. Side Discharge Deck *For Model Year '10 and Prior Serial # -059999).*	439.77

997 Commercial L. C. Diesel Max-Frame Z-Trak with 60 In. Mulch On Demand 7-Gauge Deck

Equipment for Base Machine

31 Gross HP Yanmar Horizontal Shaft Direct Injected Liquid Cooled Diesel Engine (81 Cu. In.)
1.5 x 3.0 In. Steel Tubular Frame - 7 Gauge
Full Pressure Lubrication System With Replaceable Oil Filter
Heavy-Duty Canister Air Cleaner; Dual Element, Dry-Type with Safety Element and Air Service Indicator
12 Volt with 40 AMP Regulated Charge System
Dual Hydrostatic Wheel Drive
Kanzaki Dual Unitized Pump
Dual Wheel Parking Brake
Operator Presence System
Folding Two Post ROPS (Roll-Over Protective Structure) and Seat Belt
60 In. 7-Iron PRO Commercial Mulch On Demand Mower Deck
7-Gauge Stamped Steel Mower Deck
8 In. Aluminum Spindle Housings
One-Touch Dial and Electric Deck Lift Height of Cut Adjustment
Full Floating Suspension Deck
1.5 - 5.0 In. Cutting Heights in 0.25 In. Increments
Dual Lever Direction/Speed Control
Quick-Service Hinged Foot Platform
Fully Enclosed Engine Compartment
Ergonomic Operator Contoured Soft Touch Grips and Integrated Handle Controls
11.5 MPH Mowing Speed
12 U.S. Gallon Fuel Capacity with Fuel Shutoff Valve
26x12-12 In. Square Shoulder 4PR Turf Drive Tires
15x6-6 4PR Front Caster Tires
Right Hand Control Console Cluster
Cup & Tool Holder
Low Oil Pressure Warning Light
Battery Charge Light
Hydraulic PTO Clutch
Digital Hourmeter
Deluxe Comfort Seat with Armrests

CODE	ATTACHMENT IDENTIFIER	DESCRIPTION	SUGGESTED LIST PRICE USD ($)

Select One Code From Each Required Category

BASE MACHINE

F.O.B. Raleigh, North Carolina

095DTC		997 Commercial L. C. Diesel Max-Frame Z-Trak with 60 In. Mulch On Demand 7-Gauge Deck	20,595.00

ATTACHMENTS FOR FIELD CONVERSION

		Engine:	
	TCA19917	B20 Biodiesel Conversion Kit	See Parts
		Miscellaneous:	
	TCA18513	Deluxe Comfort Seat with Armrest	See Parts
	TCB11281	Front Light (2) Kit	238.61
	DMB210226	Rear Bumper Kit	464.39
	TCB10915	Suspension Seat Kit	308.16
	TCB11711	X-Large E-Crate Cover	See Parts
		Mower Deck and Mower Deck Attachments:	
	TCB11230	Roller Striping Kit for 60 In. Deck *For Model Year '11 and Later (Serial # 060000-).*	439.77

997 Commercial L. C. Diesel Max-Frame Z-Trak with 60 In. Rear Discharge 7-Gauge Deck

Equipment for Base Machine

31 Gross HP Yanmar Horizontal Shaft Direct Injected Liquid Cooled Diesel Engine (81 Cu. In.)
1.5 x 3.0 In. Steel Tubular Frame - 7 Gauge
Full Pressure Lubrication System With Replaceable Oil Filter
Heavy-Duty Canister Air Cleaner; Dual Element, Dry-Type with Safety Element and Air Service Indicator
12 Volt with 40 AMP Regulated Charge System
Dual Hydrostatic Wheel Drive
Kanzaki Dual Unitized Pump
Dual Wheel Parking Brake
Operator Presence System
Folding Two Post ROPS (Roll-Over Protective Structure) and Seat Belt
60 In. 7-Iron PRO Commercial Side Discharge Mower Deck
7-Gauge Stamped Steel Mower Deck
8 In. Aluminum Spindle Housing
One-Touch Dial and Electric Deck Lift Height of Cut Adjustment
Full Floating Suspension Deck 1.5 - 5.0 In. Cutting Heights in 0.25 In. Increments
Dual Lever Direction/Speed Control
Quick-Service Hinged Foot Platform
Fully Enclosed Engine Compartment
Ergonomic Operator Contoured Soft Touch Grips and Integrated Handle Controls
11.5 MPH Mowing Speed
12 U.S. Gallon Fuel Capacity with Fuel Shutoff Valve
26x12-12 In. Square Shoulder 4PR Turf Drive Tires
15x6-6 4PR Front Caster Tires
Right Hand Control Console Cluster
Cup & Tool Holder
Low Oil Pressure Warning Light
Battery Charge Light
Hydraulic PTO Clutch
Digital Hourmeter
Deluxe Comfort Seat with Armrests

CODE	ATTACHMENT IDENTIFIER	DESCRIPTION	SUGGESTED LIST PRICE USD ($)

Select One Code From Each Required Category

BASE MACHINE

F.O.B. Raleigh, North Carolina

095CTC		997 Commercial L. C. Diesel Max-Frame Z-Trak with 60 In. Rear Discharge 7-Gauge Deck	19,972.00

ATTACHMENTS - ORDER AS DESIRED

European CE Kit:

9100		European CE 997 Z-Trak with 60 In. RD Mower Deck *This Code Must be Ordered to Receive a 997 Z-Trak Mower Which Meets CE Requirements.*	248.00

ATTACHMENTS FOR FIELD CONVERSION

Engine:

	TCA19917	B20 Biodiesel Conversion Kit *This kit converts one machine to use B20 Diesel fuel.*	See Parts

Miscellaneous:

	TCA18513	Deluxe Comfort Seat with Armrest	See Parts
	TCB11281	Front Light (2) Kit	238.61
	DMB210226	Rear Bumper Kit	464.39
	TCB10915	Suspension Seat Kit	308.16
	TCB11711	X-Large E-Crate Cover	See Parts

997 Commercial L. C. Diesel Max-Frame Z-Trak with 60 In. Rear Discharge 7-Gauge Deck

Continued

CODE	ATTACHMENT IDENTIFIER	DESCRIPTION	SUGGESTED LIST PRICE USD ($)
		ATTACHMENTS FOR FIELD CONVERSION Continued...	
		Mower Deck and Mower Deck Attachments:	
	DMB210112	Hydraulic Deck Lift *For Model Year '05 Machines Not Equipped with Standard Hydraulic Deck Lift.*	560.69
	TCB10953	Mulch Kit (60 In. 7-Iron, 7-Iron II and 7-Iron PRO)	319.93

997 Commercial L. C. Diesel Max-Frame Z-Trak with 72 In. Side Discharge 7-Iron PRO Deck

Equipment for Base Machine

31 Gross HP Yanmar Horizontal Shaft Direct Injected Liquid Cooled Diesel Engine (81 Cu. In.)
1.5 x 3.0 In. Steel Tubular Frame - 7 Gauge
Full Pressure Lubrication System With Replaceable Oil Filter
Heavy-Duty Canister Air Cleaner; Dual Element, Dry-Type with Safety Element and Air Service Indicator
12 Volt with 40 AMP Regulated Charge System
Dual Hydrostatic Wheel Drive
Kanzaki Dual Unitized Pump
Dual Wheel Parking Brake
Operator Presence System
Folding Two Post ROPS (Roll-Over Protective Structure) and Seat Belt
60 In. 7-Iron PRO Commercial Side Discharge Mower Deck
7-Gauge Stamped Steel Mower Deck
8 In. Aluminum Spindle Housing
One-Touch Dial and Electric Deck Lift Height of Cut Adjustment
Full Floating Suspension Deck 1.5 - 5.0 In. Cutting Heights in 0.25 In. Increments
Dual Lever Direction/Speed Control
Quick-Service Hinged Foot Platform
Fully Enclosed Engine Compartment
Ergonomic Operator Contoured Soft Touch Grips and Integrated Handle Controls
11.5 MPH Mowing Speed
12 U.S. Gallon Fuel Capacity with Fuel Shutoff Valve
26x12-12 In. Square Shoulder 4PR Turf Drive Tires
15x6-6 4PR Front Caster Tires
Right Hand Control Console Cluster
Cup & Tool Holder
Low Oil Pressure Warning Light
Battery Charge Light
Hydraulic PTO Clutch
Digital Hourmeter
Deluxe Comfort Seat with Armrests

CODE	ATTACHMENT IDENTIFIER	DESCRIPTION	SUGGESTED LIST PRICE USD ($)
		Select One Code From Each Required Category	
		BASE MACHINE	
		F.O.B. Raleigh, North Carolina	
095BTC		997 Commercial L. C. Diesel Max-Frame Z-Trak with 72 In. Side Discharge 7-Iron PRO Deck	20,344.00
		ATTACHMENTS - ORDER AS DESIRED	
		European CE Kit:	
9100		European CE 997 Z-Trak with 72 In. SD Mower Deck *This Code Must be Ordered to Receive a 997 Z-Trak Mower Which Meets CE Requirements.*	248.00
		ATTACHMENTS FOR FIELD CONVERSION	
		Engine:	
	TCA19917	B20 Biodiesel Conversion Kit *This kit converts one machine to use B20 Diesel fuel.*	See Parts
		Miscellaneous:	
	TCA18513	Deluxe Comfort Seat with Armrest	See Parts
	TCB11281	Front Light (2) Kit	238.61
	DMB210226	Rear Bumper Kit	464.39
	TCB10915	Suspension Seat Kit	308.16
	TCB11711	X-Large E-Crate Cover	See Parts

997 Commercial L. C. Diesel Max-Frame Z-Trak with 72 In. Side Discharge 7-Iron PRO Deck

Continued

CODE	ATTACHMENT IDENTIFIER	DESCRIPTION	SUGGESTED LIST PRICE USD ($)
		ATTACHMENTS FOR FIELD CONVERSION Continued...	
		Mower Deck and Mower Deck Attachments:	
	DMB210112	Hydraulic Deck Lift *For Model Year '05 Machines Not Equipped with Standard Hydraulic Deck Lift.*	560.69
	TCB10951	Mulch Kit (72 In. 7-Iron, 7-Iron II and 7-Iron PRO)	331.70
	TCB11231	Roller Striping Kit for 72 In. Deck *For Model year '11 and Later (Serial # 060000-).*	439.77
	TCB10811	Roller Striping Kit for 72 In. Side Discharge Deck *For Model Year '10 and Prior Serial # -059999).*	439.77

Z915B Commercial ZTrak

Equipment for Base Machine

23.9 HP*
Vertical-Shaft Air Cooled Engine (44.2 Cu. In.) 725cc, 17.8 kW
Full Pressure Lubrication System with Replaceable Oil Filter
Heavy Duty Canister Air Cleaner; Dry Replaceable Filter Element with Secondary Safety Element
12 Volt with 15 AMP Regulated Charge System
Dual Hydrostatic Wheel Drive
TuffTorq Heavy Duty Ground Drive
Hand Actuated Parking Brake
Steel Channel Frame
Operator Presence System
Folding Two Post ROPS (Roll-Over Protective Structure) and Seat Belt
48 In. 7-Iron II Side Discharge Mower Deck
7-Gauge Stamped Steel Mower Deck
8 In. Aluminum Spindle Housing
One-Touch Dial and Foot Spring Assisted Height of Cut Adjustment
Single-Turn Deck Transport Lock System
Full Floating Suspension Deck
1.0 - 5.5 In. Cutting Heights in 0.25 In. Increments
Dual Lever Direction/Speed Control
Wide Control Lever Bends for Increased Operator Comfort
Quick-Service Removable Foot Platform
10.0 MPH Travel Speed
11.5 U.S. Gallon Fuel Capacity
24x9.5-12 In. Square Shoulder 4PR Turf Drive Tires (48 In.)
24x12-12 In. Square Shoulder 4PR Turf Drive Tires (54 In. & 60 In.)
13x5-6 Pneumatic Front Caster Tires
Right Hand Control Console Cluster
Cup Holder
Fuel Gauge
Electric PTO Clutch
Digital Hourmeter
* @ 3600 RPM engine manufacturer certified gross power tested in accordance with SAE J1995, 725cc. The engine horsepower and torque information is provided by the engine manufacturer to be used for comparison purposes only. Actual operating horsepower and torque will be less. Refer to the engine manufacturer#s web site for additional information.

CODE	ATTACHMENT IDENTIFIER	DESCRIPTION	SUGGESTED LIST PRICE USD ($)
		Select One Code From Each Required Category	
		BASE MACHINE	
		F.O.B. Raleigh, North Carolina	
2130TC		Z915B Commercial ZTrak *Not Available for Sale in California.*	8,125.00
		DESTINATION	
0202		United States and Canada	In Base Price
0230		Australia and New Zealand	Same Price
0195		Mexico	Same Price
0250		Other	Same Price
		MOWER DECK	
1500		48 In. 7-Iron II Side Discharge Mower Deck *7-Gauge Stamped Steel Mower Deck. 8 In. Aluminum Spindle Housings.*	In Base Price
1502		54 In. 7-Iron II Side Discharge Mower Deck *7-Gauge Stamped Steel Mower Deck. 8 In. Aluminum Spindle Housings.*	270.00
1504		60 In. 7-Iron II Side Discharge Mower Deck *7-Gauge Stamped Steel Mower Deck. 8 In. Aluminum Spindle Housings.*	540.00

Z915B Commercial ZTrak

Continued

CODE	ATTACHMENT IDENTIFIER	DESCRIPTION	SUGGESTED LIST PRICE USD ($)
		SEATS	
2000		Deluxe Comfort Seat with Armrests	In Base Price
2001		Deluxe Comfort Seat with Armrests and Isolation *Includes Isolation System to Reduce Shock/Vibration*	195.00
		ATTACHMENTS FOR FIELD CONVERSION	
		Engine:	
	AM115837	Spark Arrester Screen for Muffler	See Parts
		Miscellaneous:	
	TCU31258	Cast Iron Bumper	See Parts
	TCB11281	Front Light (2) Kit	238.61
	TCB11531	Hitch Kit	32.10
	TCB11710	Large E-Crate Cover *Not for X-large E-Crate used on 72" deck machines.*	See Parts
	TCB11248	Trash Receptacle Kit	92.01
		Mower Deck and Mower Deck Attachments:	
	TCB10952	Mulch Kit (48 In. 7-Iron, 7-Iron II and 7-Iron PRO)	298.53
	TCB11469	Mulch Kit (54 In. 7-Iron, 7-Iron II, 7-Iron PRO and HC)	309.23
	TCB10953	Mulch Kit (60 In. 7-Iron, 7-Iron II and 7-Iron PRO)	319.93
	BTC10442	Rear Anti-Scalp Wheel Kit *For 7-Iron II Deck fitted to Z900B-Series only.*	170.13
	BTC10591	Rear Anti-Scalp Wheel Kit *For 7-Iron II Deck fitted to Z900B-Series only.*	170.13
	BTC10445	Rear Anti-Scalp Wheel Kit *For 7-Iron II Deck fitted to Z900B-Series only.*	170.13
	BTC10285	Rubber Flap Striping Kit for 48" Deck	419.44
	BTC10286	Rubber Flap Striping Kit for 54" & 60" Decks	439.77
		Order Zone:	
	LP40112	Beacon Light Kit	In Catalog
	LP1400	Floor Mat	In Catalog
	LPA11548	Sun Canopy	In Catalog

Z920M Commercial ZTrak

Equipment for Base Machine

23.5 HP*
Vertical-Shaft Air Cooled Engine (44.3 Cu. In.) 726cc,17.5 kW
Full Pressure Lubrication System with Replaceable Oil Filter
Heavy Duty Canister Air Cleaner; Dry Replaceable Filter Element with Secondary Safety Element
12 Volt with 20 AMP Regulated Charge System
Dual Hydrostatic Wheel Drive
TuffTorq Heavy Duty Ground Drive
Hand Actuated Parking Brake
Steel Channel Frame
Operator Presence System
Folding Two Post ROPS (Roll-Over Protective Structure) and Seat Belt
48 In. 7-Iron PRO Side Discharge Mower Deck
7-Gauge Stamped Steel Mower Deck
8 In. Aluminum Spindle Housing
Rear Anti-Scalp Wheels
One-Touch Dial and Foot Spring Assisted Height of Cut Adjustment
Single-Turn Deck Transport Lock System
Full Floating Suspension Deck
1.0 - 5.5 In. Cutting Heights in 0.25 In. Increments
Dual Lever Direction/Speed Control
Wide Control Lever Bends for Increased Operator Comfort
Quick-Service Removable Foot Platform
10 MPH Travel Speed
11.5 U.S. Gallon Fuel Capacity
24x9.5-12 In. Square Shoulder 4PR Turf Drive Tires (48 In.)
24x12-12 In. Square Shoulder 4PR Turf Drive Tires (54 In. & 60 In.)
13x6.5-6 Semi-Pneumatic Front Caster Tires
Rear Bumper
Right Hand Control Console Cluster
Cup Holder
Fuel Gauge
Electric PTO Clutch
Digital Hourmeter
* @ 3600 RPM engine manufacturer certified gross power tested in accordance with SAE J1995, 726cc. The engine horsepower and torque information is provided by the engine manufacturer to be used for comparison purposes only. Actual operating horsepower and torque will be less. Refer to the engine manufacturer#s web site for additional information.

CODE	ATTACHMENT IDENTIFIER	DESCRIPTION	SUGGESTED LIST PRICE USD ($)

Select One Code From Each Required Category

BASE MACHINE

F.O.B. Raleigh, North Carolina

2140TC		Z920M Commercial ZTrak *Available for Sale in all 50 states. California must select option code 1500, 48" 7-Iron PRO Side Discharge Mowing Deck.*	9,329.00

DESTINATION

0202		United States and Canada	In Base Price
0230		Australia and New Zealand	Same Price
0195		Mexico	Same Price
0250		Other	Same Price

MOWER DECK

1500		48 In. 7-Iron PRO Side Discharge Mower Deck *7-Gauge Stamped Steel Mower Deck. 8 In. Aluminum Spindle Housings. Rear Anti-Scalp Wheels.*	In Base Price
1501		48 In. 7-Iron PRO Mulch On Demand Mower Deck *7-Gauge Stamped Steel Mower Deck. 8 In. Aluminum Spindle Housings. Rear Anti-Scalp Wheels.*	870.00

Z920M Commercial ZTrak
Continued

CODE	ATTACHMENT IDENTIFIER	DESCRIPTION	SUGGESTED LIST PRICE USD ($)
		MOWER DECK Continued...	
1502		54 In. 7-Iron PRO Side Discharge Mower Deck *7-Gauge Stamped Steel Mower Deck. 8 In. Aluminum Spindle Housings. Rear Anti-Scalp Wheels.*	270.00
1504		60 In. 7-Iron PRO Side Discharge Mower Deck *7-Gauge Stamped Steel Mower Deck. 8 In. Aluminum Spindle Housings. Rear Anti-Scalp Wheels.*	540.00
		SEATS	
2000		Deluxe Comfort Seat with Armrests	In Base Price
2001		Deluxe Comfort Seat with Armrests and Isolation *Includes Isolation System to Reduce Shock/Vibration*	195.00
2002		Fully Adjustable Suspension Seat with Armrests *Adjustable Back Rest and Lumbar Support. Adjustable for Operator Weight. Reduces Shock/Vibration and Increases Comfort.*	475.00
		ATTACHMENTS FOR FIELD CONVERSION	
		Engine:	
	AM115837	Spark Arrester Screen for Muffler	See Parts
		Miscellaneous:	
	TCB11281	Front Light (2) Kit	238.61
	TCB11531	Hitch Kit	32.10
	TCB11710	Large E-Crate Cover *Not for X-large E-Crate used on 72" deck machines.*	See Parts
	TCB11248	Trash Receptacle Kit	92.01
		Mower Deck and Mower Deck Attachments:	
	TCB10952	Mulch Kit (48 In. 7-Iron, 7-Iron II and 7-Iron PRO)	298.53
	TCB11469	Mulch Kit (54 In. 7-Iron, 7-Iron II, 7-Iron PRO and HC)	309.23
	TCB10953	Mulch Kit (60 In. 7-Iron, 7-Iron II and 7-Iron PRO)	319.93
	BTC10285	Rubber Flap Striping Kit for 48" Deck	419.44
	BTC10286	Rubber Flap Striping Kit for 54" & 60" Decks	439.77
		Order Zone:	
	LP40112	Beacon Light Kit	In Catalog
	LP1400	Floor Mat	In Catalog
	LPA11548	Sun Canopy	In Catalog

Z920M Commercial ZTrak

Equipment for Base Machine

23.5 HP*
Vertical-Shaft Air Cooled Engine (44.3 Cu. In.) 726cc,17.5 kW
Full Pressure Lubrication System with Replaceable Oil Filter
Heavy Duty Canister Air Cleaner; Dry Replaceable Filter Element with Secondary Safety Element
12 Volt with 20 AMP Regulated Charge System
Dual Hydrostatic Wheel Drive
TuffTorq Heavy Duty Ground Drive
Hand Actuated Parking Brake
Steel Channel Frame
Operator Presence System
Folding Two Post ROPS (Roll-Over Protective Structure) and Seat Belt
54 In. 7-Iron PRO Side Discharge Mower Deck
7-Gauge Stamped Steel Mower Deck
8 In. Aluminum Spindle Housing
Rear Anti-Scalp Wheels
One-Touch Dial and Foot Spring Assisted Height of Cut Adjustment
Single-Turn Deck Transport Lock System
Full Floating Suspension Deck
1.0 - 5.5 In. Cutting Heights in 0.25 In. Increments
Dual Lever Direction/Speed Control
Wide Control Lever Bends for Increased Operator Comfort
Quick-Service Removable Foot Platform
10 MPH Travel Speed
11.5 U.S. Gallon Fuel Capacity
24x12-12 In. Square Shoulder 4PR Turf Drive Tires (54 In.)
13x6.5-6 Semi-Pneumatic Front Caster Tires
Rear Bumper
Right Hand Control Console Cluster
Cup Holder
Fuel Gauge
Electric PTO Clutch
Digital Hourmeter

* @ 3600 RPM engine manufacturer certified gross power tested in accordance with SAE J1995, 726cc. The engine horsepower and torque information is provided by the engine manufacturer to be used for comparison purposes only. Actual operating horsepower and torque will be less. Refer to the engine manufacturer?s web site for additional information.

CODE	ATTACHMENT IDENTIFIER	DESCRIPTION	SUGGESTED LIST PRICE USD ($)

Select One Code From Each Required Category

BASE MACHINE

F.O.B. Raleigh, North Carolina

2141TC	Z920M Commercial ZTrak *Available for Sale in California only.*	9,329.00

DESTINATION

0202	United States and Canada	In Base Price
0230	Australia and New Zealand	Same Price
0195	Mexico	Same Price
0250	Other	Same Price

MOWER DECK

1502	54 In. 7-Iron PRO Side Discharge Mower Deck *7-Gauge Stamped Steel Mower Deck. 8 In. Aluminum Spindle Housings. Rear Anti-Scalp Wheels.*	270.00

SEATS

2000	Deluxe Comfort Seat with Armrests	In Base Price
2001	Deluxe Comfort Seat with Armrests and Isolation	195.00

Z920M Commercial ZTrak
Continued

CODE	ATTACHMENT IDENTIFIER	DESCRIPTION	SUGGESTED LIST PRICE USD ($)
		SEATS Continued... *Includes Isolation System to Reduce Shock/Vibration*	
2002		Fully Adjustable Suspension Seat with Armrests *Adjustable Back Rest and Lumbar Support. Adjustable for Operator Weight. Reduces Shock/Vibration and Increases Comfort.*	475.00

ATTACHMENTS FOR FIELD CONVERSION

		Engine:	
	AM115837	Spark Arrester Screen for Muffler	See Parts
		Miscellaneous:	
	TCB11281	Front Light (2) Kit	238.61
	TCB11531	Hitch Kit	32.10
	TCB11710	Large E-Crate Cover *Not for X-large E-Crate used on 72" deck machines.*	See Parts
	TCB11248	Trash Receptacle Kit	92.01
		Mower Deck and Mower Deck Attachments:	
	TCB11469	Mulch Kit (54 In. 7-Iron, 7-Iron II, 7-Iron PRO and HC)	309.23
	TCB10953	Mulch Kit (60 In. 7-Iron, 7-Iron II and 7-Iron PRO)	319.93
	BTC10286	Rubber Flap Striping Kit for 54" & 60" Decks	439.77
		Order Zone:	
	LP40112	Beacon Light Kit	In Catalog
	LP1400	Floor Mat	In Catalog
	LPA11548	Sun Canopy	In Catalog

Z925M EFI Commercial ZTrak

Equipment for Base Machine

24.6 HP*
Vertical-Shaft Air Cooled Electronically Fuel Injected Closed Loop System Engine (45.6 Cu. In.) 747cc, 18.3 kW
Full Pressure Lubrication System with Replaceable Oil Filter
Heavy Duty Canister Air Cleaner; Dry Replaceable Filter Element with Secondary Safety Element
12 Volt with 20 AMP Regulated Charge System
Dual Hydrostatic Wheel Drive
TuffTorq Heavy Duty Ground Drive
Hand Actuated Parking Brake
Steel Channel Frame
Operator Presence System
Folding Two Post ROPS (Roll-Over Protective Structure) and Seat Belt
54 In. 7-Iron PRO Side Discharge Mower Deck
7-Gauge Stamped Steel Mower Deck
8 In. Aluminum Spindle Housing
Rear Anti-Scalp Wheels
One-Touch Dial and Foot Spring Assisted Height of Cut Adjustment
Single-Turn Deck Transport Lock System
Full Floating Suspension Deck
1.0 - 5.5 In. Cutting Heights in 0.25 In. Increments
Dual Lever Direction/Speed Control
Wide Control Lever Bends for Increased Operator Comfort
Quick-Service Removable Foot Platform
10 MPH Travel Speed
11.5 U.S. Gallon Fuel Capacity
24x12-12 In. Square Shoulder 4PR Turf Drive Tires
13x6.5-6 Semi-Pneumatic Front Caster Tires
Rear Bumper
Right Hand Control Console Cluster
Cup Holder
Fuel Gauge
Electric PTO Clutch
Digital Hourmeter

* @ 3600 RPM engine manufacturer certified gross power tested in accordance with SAE J1995, 747cc. The engine horsepower and torque information is provided by the engine manufacturer to be used for comparison purposes only. Actual operating horsepower and torque will be less. Refer to the engine manufacturer#s web site for additional information.

CODE	ATTACHMENT IDENTIFIER	DESCRIPTION	SUGGESTED LIST PRICE USD ($)

Select One Code From Each Required Category

BASE MACHINE

F.O.B. Raleigh, North Carolina

2150TC	Z925M EFI Commercial ZTrak *Not Available for Sale in California.*	10,269.00

DESTINATION

0202	United States and Canada	In Base Price
0230	Australia and New Zealand	Same Price
0195	Mexico	Same Price
0250	Other	Same Price

MOWER DECK

1502	54 In. 7-Iron PRO Side Discharge Mower Deck *7-Gauge Stamped Steel Mower Deck. 8 In. Aluminum Spindle Housings. Rear Anti-Scalp Wheels.*	In Base Price
1503	54 In. 7-Iron PRO Mulch On Demand Mower Deck *7-Gauge Stamped Steel Mower Deck. 8 In. Aluminum Spindle Housings. Rear Anti-Scalp Wheels.*	870.00
1504	60 In. 7-Iron PRO Side Discharge Mower Deck	270.00

Z925M EFI Commercial ZTrak
Continued

CODE	ATTACHMENT IDENTIFIER	DESCRIPTION	SUGGESTED LIST PRICE USD ($)
		MOWER DECK Continued... *7-Gauge Stamped Steel Mower Deck. 8 In. Aluminum Spindle Housings. Rear Anti-Scalp Wheels.*	
		SEATS	
2000		Deluxe Comfort Seat with Armrests	In Base Price
2001		Deluxe Comfort Seat with Armrests and Isolation *Includes Isolation System to Reduce Shock/Vibration*	195.00
2002		Fully Adjustable Suspension Seat with Armrests *Adjustable Back Rest and Lumbar Support. Adjustable for Operator Weight. Reduces Shock/Vibration and Increases Comfort.*	475.00
		ATTACHMENTS FOR FIELD CONVERSION	
		Engine:	
	AM115837	Spark Arrester Screen for Muffler	See Parts
		Miscellaneous:	
	TCB11281	Front Light (2) Kit	238.61
	TCB11531	Hitch Kit	32.10
	TCB11710	Large E-Crate Cover *Not for X-large E-Crate used on 72" deck machines.*	See Parts
	TCB11248	Trash Receptacle Kit	92.01
		Mower Deck and Mower Deck Attachments:	
	TCB11469	Mulch Kit (54 In. 7-Iron, 7-Iron II, 7-Iron PRO and HC)	309.23
	TCB10953	Mulch Kit (60 In. 7-Iron, 7-Iron II and 7-Iron PRO)	319.93
	BTC10286	Rubber Flap Striping Kit for 54" & 60" Decks	439.77
		Order Zone:	
	LP40112	Beacon Light Kit	In Catalog
	LP1400	Floor Mat	In Catalog
	LPA11548	Sun Canopy	In Catalog

Z925M Flex Fuel Commercial ZTrak

Equipment for Base Machine

24.6 HP*
Vertical-Shaft Air Cooled Electronically Fuel Injected Closed Loop System Flex Fuel (E0 to E85) Engine (45.6 Cu. In.) 747cc, 18.3 kW
Full Pressure Lubrication System with Replaceable Oil Filter
Heavy Duty Canister Air Cleaner; Dry Replaceable Filter Element with Secondary Safety Element
12 Volt with 20 AMP Regulated Charge System
Dual Hydrostatic Wheel Drive
TuffTorq Heavy Duty Ground Drive
Hand Actuated Parking Brake
Steel Channel Frame
Operator Presence System
Folding Two Post ROPS (Roll-Over Protective Structure) and Seat Belt
54 In. 7-Iron PRO Side Discharge Mower Deck
7-Gauge Stamped Steel Mower Deck
8 In. Aluminum Spindle Housing
Rear Anti-Scalp Wheels
One-Touch Dial and Foot Spring Assisted Height of Cut Adjustment
Single-Turn Deck Transport Lock System
Full Floating Suspension Deck
1.0 - 5.5 In. Cutting Heights in 0.25 In. Increments
Dual Lever Direction/Speed Control
Wide Control Lever Bends for Increased Operator Comfort
Quick-Service Removable Foot Platform
10 MPH Travel Speed
11.5 U.S. Gallon Fuel Capacity
24x12-12 In. Square Shoulder 4PR Turf Drive Tires
13x6.5-6 Semi-Pneumatic Front Caster Tires
Rear Bumper
Right Hand Control Console Cluster
Cup Holder
Fuel Gauge
Electric PTO Clutch
Digital Hourmeter
* @ 3600 RPM engine manufacturer certified gross power tested in accordance with SAE J1995, 747cc. The engine horsepower and torque information is provided by the engine manufacturer to be used for comparison purposes only. Actual operating horsepower and torque will be less. Refer to the engine manufacturer?s web site for additional information.

CODE	ATTACHMENT IDENTIFIER	DESCRIPTION	SUGGESTED LIST PRICE USD ($)

Select One Code From Each Required Category

BASE MACHINE

F.O.B. Raleigh, North Carolina

2151TC	Z925M Flex Fuel Commercial ZTrak *Not available for Sale in California.*	10,539.00

DESTINATION

0202	United States and Canada	In Base Price
0230	Australia and New Zealand	Same Price
0195	Mexico	Same Price
0250	Other	Same Price

MOWER DECK

1502	54 In. 7-Iron PRO Side Discharge Mower Deck *7-Gauge Stamped Steel Mower Deck. 8 In. Aluminum Spindle Housings. Rear Anti-Scalp Wheels.*	In Base Price
1504	60 In. 7-Iron PRO Side Discharge Mower Deck *7-Gauge Stamped Steel Mower Deck. 8 In. Aluminum Spindle Housings. Rear Anti-Scalp Wheels.*	270.00

Z925M Flex Fuel Commercial ZTrak

Continued

CODE	ATTACHMENT IDENTIFIER	DESCRIPTION	SUGGESTED LIST PRICE USD ($)
		SEATS	
2000		Deluxe Comfort Seat with Armrests	In Base Price
2001		Deluxe Comfort Seat with Armrests and Isolation *Includes Isolation System to Reduce Shock/Vibration*	195.00
2002		Fully Adjustable Suspension Seat with Armrests *Adjustable Back Rest and Lumbar Support. Adjustable for Operator Weight. Reduces Shock/Vibration and Increases Comfort.*	475.00

Z930M Commercial ZTrak

Equipment for Base Machine

25.5 HP*
Vertical-Shaft Air Cooled Engine (52.0 Cu. In.) 852cc,19.0 kW
Full Pressure Lubrication System with Replaceable Oil Filter
Heavy Duty Canister Air Cleaner; Dry Replaceable Filter Element with Secondary Safety Element
12 Volt with 20 AMP Regulated Charge System
Dual Hydrostatic Wheel Drive
TuffTorq Heavy Duty Ground Drive
Hand Actuated Parking Brake
Steel Channel Frame
Operator Presence System
Folding Two Post ROPS (Roll-Over Protective Structure) and Seat Belt
60 In. 7-Iron PRO Side Discharge Mower Deck
7-Gauge Stamped Steel Mower Deck
8 In. Aluminum Spindle Housing
Rear Anti-Scalp Wheels
One-Touch Dial and Foot Spring Assisted Height of Cut Adjustment
Single-Turn Deck Transport Lock System
Full Floating Suspension Deck
1.0 - 5.5 In. Cutting Heights in 0.25 In. Increments
Dual Lever Direction/Speed Control
Wide Control Lever Bends for Increased Operator Comfort
Quick-Service Removable Foot Platform
10 MPH Travel Speed
11.5 U.S. Gallon Fuel Capacity
24x12-12 In. Square Shoulder 4PR Turf Drive Tires (60" & 72")
13x6.5-6 Semi-Pneumatic Front Caster Tires
Rear Bumper
Right Hand Control Console Cluster
Cup Holder
Fuel Gauge
Electric PTO Clutch
Digital Hourmeter
* @ 3600 RPM engine manufacturer certified gross power tested in accordance with SAE J1995, 852cc. The engine horsepower and torque information is provided by the engine manufacturer to be used for comparison purposes only. Actual operating horsepower and torque will be less. Refer to the engine manufacturer#s web site for additional information.

CODE	ATTACHMENT IDENTIFIER	DESCRIPTION	SUGGESTED LIST PRICE USD ($)

Select One Code From Each Required Category

BASE MACHINE

F.O.B. Raleigh, North Carolina

2160TC	Z930M Commercial ZTrak *Not Available for Sale in California.*	10,269.00

DESTINATION

0202	United States and Canada	In Base Price
0230	Australia and New Zealand	Same Price
0195	Mexico	Same Price
0250	Other	Same Price

MOWER DECK

1504	60 In. 7-Iron PRO Side Discharge Mower Deck *7-Gauge Stamped Steel Mower Deck. 8 In. Aluminum Spindle Housings. Rear Anti-Scalp Wheels.*	In Base Price
1505	60 In. 7-Iron PRO Mulch On Demand Mower Deck *7-Gauge Stamped Steel Mower Deck. 8 In. Aluminum Spindle Housings. Rear Anti-Scalp Wheels.*	870.00
1506	72 In. 7-Iron PRO Side Discharge Mower Deck *7-Gauge Stamped Steel Mower Deck. 8 In. Aluminum Spindle Housings. Rear Anti-Scalp*	540.00

Z930M Commercial ZTrak
Continued

CODE	ATTACHMENT IDENTIFIER	DESCRIPTION	SUGGESTED LIST PRICE USD ($)
		MOWER DECK Continued...	
		Wheels.	
		SEATS	
2000		Deluxe Comfort Seat with Armrests	In Base Price
2001		Deluxe Comfort Seat with Armrests and Isolation *Includes Isolation System to Reduce Shock/Vibration*	195.00
2002		Fully Adjustable Suspension Seat with Armrests *Adjustable Back Rest and Lumbar Support. Adjustable for Operator Weight. Reduces Shock/Vibration and Increases Comfort.*	475.00
		ATTACHMENTS FOR FIELD CONVERSION	
		Engine:	
	AM115837	Spark Arrester Screen for Muffler	See Parts
		Miscellaneous:	
	TCB11281	Front Light (2) Kit	238.61
	TCB11531	Hitch Kit	32.10
	TCB11710	Large E-Crate Cover *Not for X-large E-Crate used on 72" deck machines.*	See Parts
	TCB11248	Trash Receptacle Kit	92.01
		Mower Deck and Mower Deck Attachments:	
	TCB10953	Mulch Kit (60 In. 7-Iron, 7-Iron II and 7-Iron PRO)	319.93
	TCB10951	Mulch Kit (72 In. 7-Iron, 7-Iron II and 7-Iron PRO)	331.70
	BTC10286	Rubber Flap Striping Kit for 54" & 60" Decks	439.77
	BTC10287	Rubber Flap Striping Kit for 72" Deck	449.40
		Order Zone:	
	LP40112	Beacon Light Kit	In Catalog
	LP1400	Floor Mat	In Catalog
	LPA11548	Sun Canopy	In Catalog

Z930M EFI Commercial ZTrak

Equipment for Base Machine

25.3 HP*
Vertical-Shaft Air Cooled Electronically Fuel Injected Closed Loop System Engine (45.6 Cu. In.) 747cc, 18.3 kW
Full Pressure Lubrication System with Replaceable Oil Filter
Heavy Duty Canister Air Cleaner; Dry Replaceable Filter Element with Secondary Safety Element
12 Volt with 20 AMP Regulated Charge System
Dual Hydrostatic Wheel Drive
TuffTorq Heavy Duty Ground Drive
Hand Actuated Parking Brake
Steel Channel Frame
Operator Presence System
Folding Two Post ROPS (Roll-Over Protective Structure) and Seat Belt
60 In. 7-Iron PRO Side Discharge Mower Deck
7-Gauge Stamped Steel Mower Deck
8 In. Aluminum Spindle Housing
Rear Anti-Scalp Wheels
One-Touch Dial and Foot Spring Assisted Height of Cut Adjustment
Single-Turn Deck Transport Lock System
Full Floating Suspension Deck
1.0 - 5.5 In. Cutting Heights in 0.25 In. Increments
Dual Lever Direction/Speed Control
Wide Control Lever Bends for Increased Operator Comfort
Quick-Service Removable Foot Platform
10 MPH Travel Speed
11.5 U.S. Gallon Fuel Capacity
24x12-12 In. Square Shoulder 4PR Turf Drive Tires
13x6.5-6 Semi-Pneumatic Front Caster Tires
Rear Bumper
Right Hand Control Console Cluster
Cup Holder
Fuel Gauge
Electric PTO Clutch
Digital Hourmeter

* @ 3600 RPM engine manufacturer certified gross power tested in accordance with SAE J1995, 747cc. The engine horsepower and torque information is provided by the engine manufacturer to be used for comparison purposes only. Actual operating horsepower and torque will be less. Refer to the engine manufacturer#s web site for additional information.

CODE	ATTACHMENT IDENTIFIER	DESCRIPTION	SUGGESTED LIST PRICE USD ($)

Select One Code From Each Required Category

BASE MACHINE

F.O.B. Raleigh, North Carolina

2161TC	Z930M EFI Commercial ZTrak *Not Available for Sale in California.*	10,799.00

DESTINATION

0202	United States and Canada	In Base Price
0230	Australia and New Zealand	Same Price
0195	Mexico	Same Price
0250	Other	Same Price

MOWER DECK

1504	60 In. 7-Iron PRO Side Discharge Mower Deck *7-Gauge Stamped Steel Mower Deck. 8 In. Aluminum Spindle Housings. Rear Anti-Scalp Wheels.*	In Base Price
1505	60 In. 7-Iron PRO Mulch On Demand Mower Deck *7-Gauge Stamped Steel Mower Deck. 8 In. Aluminum Spindle Housings. Rear Anti-Scalp Wheels.*	870.00

Z930M EFI Commercial ZTrak
Continued

CODE	ATTACHMENT IDENTIFIER	DESCRIPTION	SUGGESTED LIST PRICE USD ($)
		SEATS	
2000		Deluxe Comfort Seat with Armrests	In Base Price
2001		Deluxe Comfort Seat with Armrests and Isolation *Includes Isolation System to Reduce Shock/Vibration*	195.00
2002		Fully Adjustable Suspension Seat with Armrests *Adjustable Back Rest and Lumbar Support. Adjustable for Operator Weight. Reduces Shock/Vibration and Increases Comfort.*	475.00
		ATTACHMENTS FOR FIELD CONVERSION	
		Engine:	
	AM115837	Spark Arrester Screen for Muffler	See Parts
		Miscellaneous:	
	TCB11281	Front Light (2) Kit	238.61
	TCB11531	Hitch Kit	32.10
	TCB11710	Large E-Crate Cover *Not for X-large E-Crate used on 72" deck machines.*	See Parts
	TCB11248	Trash Receptacle Kit	92.01
		Mower Deck and Mower Deck Attachments:	
	TCB10953	Mulch Kit (60 In. 7-Iron, 7-Iron II and 7-Iron PRO)	319.93
	TCB10951	Mulch Kit (72 In. 7-Iron, 7-Iron II and 7-Iron PRO)	331.70
	BTC10286	Rubber Flap Striping Kit for 54" & 60" Decks	439.77
		Order Zone:	
	LP40112	Beacon Light Kit	In Catalog
	LP1400	Floor Mat	In Catalog
	LPA11548	Sun Canopy	In Catalog

Z920R Commercial ZTrak

Equipment for Base Machine

23.5 HP*
Vertical-Shaft Air Cooled Engine (44.3 Cu. In.) 726cc, 17.5 kW
Full Pressure Lubrication System with Replaceable Oil Filter
Heavy Duty Canister Air Cleaner; Dry Replaceable Filter Element with Secondary Safety Element
12 Volt with 20 AMP Regulated Charge System
Dual Hydrostatic Wheel Drive
TuffTorq Heavy Duty Ground Drive With Cross Porting
Foot Actuated Parking Brake
Steel Channel Frame
Operator Presence System
Folding Two Post ROPS (Roll-Over Protective Structure) and Seat Belt
48 In. 7-Iron PRO Side Discharge Mower Deck
7-Gauge Stamped Steel Mower Deck
8 In. Aluminum Spindle Housing
Rear Anti-Scalp Wheels
One-Touch Dial and Power Height of Cut Adjustment
Ergonomic Operator Contoured Soft Touch Grips and Integrated Handle Controls
Single-Turn Deck Transport Lock System
Full Floating Suspension Deck
1.0 - 5.5 In. Cutting Heights in 0.25 In. Increments
Dual Lever Direction/Speed Control
Wide Control Lever Bends for Increased Operator Comfort
Quick-Service Removable Foot Platform
12.0 MPH Travel Speed
11.5 U.S. Gallon Fuel Capacity
24x9.5-12 In. Square Shoulder 4PR Turf Drive Tires (48")
24x12-12 In. Square Shoulder 4PR Turf Drive Tires (54")
13x6.5-6 Semi-Pneumatic Front Caster Tires
Rear Bumper
Right Hand Control Console Cluster
Cup Holder
Fuel Gauge
Electric PTO Clutch
Digital Hourmeter and Diagnostic Pkg.
* @ 3600 RPM engine manufacturer certified gross power tested in accordance with SAE J1995, 726cc. The engine horsepower and torque information is provided by the engine manufacturer to be used for comparison purposes only. Actual operating horsepower and torque will be less. Refer to the engine manufacturer#s web site for additional information.

CODE	ATTACHMENT IDENTIFIER	DESCRIPTION	SUGGESTED LIST PRICE USD ($)

Select One Code From Each Required Category

BASE MACHINE

F.O.B. Raleigh, North Carolina

2220TC	Z920R Commercial ZTrak *Not Available for Sale in California.*	11,099.00

DESTINATION

0202	United States and Canada	In Base Price
0230	Australia and New Zealand	Same Price
0195	Mexico	Same Price
0250	Other	Same Price

MOWER DECK

1500	48 In. 7-Iron PRO Side Discharge Mower Deck *7-Gauge Stamped Steel Mower Deck. 8 In. Aluminum Spindle Housings. Rear Anti-Scalp Wheels.*	In Base Price
1502	54 In. 7-Iron PRO Side Discharge Mower Deck *7-Gauge Stamped Steel Mower Deck. 8 In. Aluminum Spindle Housings. Rear Anti-Scalp Wheels.*	270.00

Z920R Commercial ZTrak
Continued

CODE	ATTACHMENT IDENTIFIER	DESCRIPTION	SUGGESTED LIST PRICE USD ($)
		SEATS	
2000		Deluxe Comfort Seat with Armrests	In Base Price
2001		Deluxe Comfort Seat with Armrests and Isolation *Includes Isolation System to Reduce Shock/Vibration*	195.00
2002		Fully Adjustable Suspension Seat with Armrests *Adjustable Back Rest and Lumbar Support. Adjustable for Operator Weight. Reduces Shock/Vibration and Increases Comfort.*	475.00
		ATTACHMENTS FOR FIELD CONVERSION	
		Engine:	
	AM115837	Spark Arrester Screen for Muffler	See Parts
		Miscellaneous:	
	TCB11281	Front Light (2) Kit	238.61
	TCB11531	Hitch Kit	32.10
	TCB11710	Large E-Crate Cover *Not for X-large E-Crate used on 72" deck machines.*	See Parts
	TCB11248	Trash Receptacle Kit	92.01
	TCB11711	X-Large E-Crate Cover *Not for large E-Crate used on 48"-60" deck machines.*	See Parts
		Mower Deck and Mower Deck Attachments:	
	TCB10952	Mulch Kit (48 In. 7-Iron, 7-Iron II and 7-Iron PRO)	298.53
	TCB11469	Mulch Kit (54 In. 7-Iron, 7-Iron II, 7-Iron PRO and HC)	309.23
	BTC10285	Rubber Flap Striping Kit for 48" Deck	419.44
	BTC10286	Rubber Flap Striping Kit for 54" & 60" Decks	439.77
		Order Zone:	
	LP40112	Beacon Light Kit	In Catalog
	LP1400	Floor Mat	In Catalog
	LPA11548	Sun Canopy	In Catalog

Z930R Commercial Ztrak

Equipment for Base Machine

25.5 HP*
Vertical-Shaft Air Cooled Engine (52.0 Cu. In.) 852cc, 19.0 kW
Full Pressure Lubrication System with Replaceable Oil Filter
Heavy Duty Canister Air Cleaner; Dry Replaceable Filter Element with Secondary Safety Element
12 Volt with 20 AMP Regulated Charge System
Dual Hydrostatic Wheel Drive
TuffTorq Heavy Duty Ground Drive With Cross Porting
Foot Actuated Parking Brake
Steel Channel Frame
Operator Presence System
Folding Two Post ROPS (Roll-Over Protective Structure) and Seat Belt
54 In. 7-Iron PRO Side Discharge Mower Deck
7-Gauge Stamped Steel Mower Deck
8 In. Aluminum Spindle Housing
Rear Anti-Scalp Wheels
One-Touch Dial and Power Height of Cut Adjustment
Ergonomic Operator Contoured Soft Touch Grips and Integrated Handle Controls
Single-Turn Deck Transport Lock System
Full Floating Suspension Deck
1.0 - 5.5 In. Cutting Heights in 0.25 In. Increments
Dual Lever Direction/Speed Control
Wide Control Lever Bends for Increased Operator Comfort
Quick-Service Removable Foot Platform
12 MPH Travel Speed
11.5 U.S. Gallon Fuel Capacity
24x12-12 In. Square Shoulder 4PR Turf Drive Tires
13x6.5-6 Semi-Pneumatic Front Caster Tires
Rear Bumper
Right Hand Control Console Cluster
Cup Holder
Fuel Gauge
Electric PTO Clutch
Digital Hourmeter and Diagnostic Pkg.
* @ 3600 RPM engine manufacturer certified gross power tested in accordance with SAE J1995, 852cc. The engine horsepower and torque information is provided by the engine manufacturer to be used for comparison purposes only. Actual operating horsepower and torque will be less. Refer to the engine manufacturer#s web site for additional information.

CODE	ATTACHMENT IDENTIFIER	DESCRIPTION	SUGGESTED LIST PRICE USD ($)

Select One Code From Each Required Category

BASE MACHINE

F.O.B. Raleigh, North Carolina

2180TC	Z930R Commercial Ztrak *Not Available for Sale in California.*	11,759.00

DESTINATION

0202	United States and Canada	In Base Price
0230	Australia and New Zealand	Same Price
0195	Mexico	Same Price
0250	Other	Same Price

MOWER DECK

1502	54 In. 7-Iron PRO Side Discharge Mower Deck *7-Gauge Stamped Steel Mower Deck. 8 In. Aluminum Spindle Housings. Rear Anti-Scalp Wheels.*	In Base Price
1503	54 In. 7-Iron PRO Mulch On Demand Mower Deck *7-Gauge Stamped Steel Mower Deck. 8 In. Aluminum Spindle Housings. Rear Anti-Scalp Wheels.*	870.00

Z930R Commercial Ztrak
Continued

CODE	ATTACHMENT IDENTIFIER	DESCRIPTION	SUGGESTED LIST PRICE USD ($)
		MOWER DECK Continued...	
1504		60 In. 7-Iron PRO Side Discharge Mower Deck *7-Gauge Stamped Steel Mower Deck. 8 In. Aluminum Spindle Housings. Rear Anti-Scalp Wheels.*	270.00
		SEATS	
2000		Deluxe Comfort Seat with Armrests	In Base Price
2001		Deluxe Comfort Seat with Armrests and Isolation *Includes Isolation System to Reduce Shock/Vibration*	195.00
2002		Fully Adjustable Suspension Seat with Armrests *Adjustable Back Rest and Lumbar Support. Adjustable for Operator Weight. Reduces Shock/Vibration and Increases Comfort.*	475.00
		ATTACHMENTS FOR FIELD CONVERSION	
		Engine:	
	AM115837	Spark Arrester Screen for Muffler	See Parts
		Miscellaneous:	
	TCB11281	Front Light (2) Kit	238.61
	TCB11531	Hitch Kit	32.10
	TCB11710	Large E-Crate Cover *Not for X-large E-Crate used on 72" deck machines.*	See Parts
	TCB11248	Trash Receptacle Kit	92.01
		Mower Deck and Mower Deck Attachments:	
	TCB11469	Mulch Kit (54 In. 7-Iron, 7-Iron II, 7-Iron PRO and HC)	309.23
	TCB10953	Mulch Kit (60 In. 7-Iron, 7-Iron II and 7-Iron PRO)	319.93
	BTC10286	Rubber Flap Striping Kit for 54" & 60" Decks	439.77
		Order Zone:	
	LP40112	Beacon Light Kit	In Catalog
	LP1400	Floor Mat	In Catalog
	LPA11548	Sun Canopy	In Catalog

Z950R Commercial ZTrak

Equipment for Base Machine

27.0 HP*
Vertical-Shaft Air Cooled Engine (52.0 Cu. In.) 852cc, 20.1 kW
Full Pressure Lubrication System with Replaceable Oil Filter
Heavy Duty Canister Air Cleaner; Dry Replaceable Filter Element with Secondary Safety Element
12 Volt with 20 AMP Regulated Charge System
Dual Hydrostatic Wheel Drive
TuffTorq Heavy Duty Ground Drive With Cross Porting
Foot Actuated Parking Brake
Steel Channel Frame
Operator Presence System
Folding Two Post ROPS (Roll-Over Protective Structure) and Seat Belt
60 In. 7-Iron PRO Side Discharge Mower Deck
7-Gauge Stamped Steel Mower Deck
8 In. Aluminum Spindle Housing
Rear Anti-Scalp Wheels
One-Touch Dial and Power Height of Cut Adjustment
Ergonomic Operator Contoured Soft Touch Grips and Integrated Handle Controls
Single-Turn Deck Transport Lock System
Full Floating Suspension Deck
1.0 - 5.5 In. Cutting Heights in 0.25 In. Increments
Dual Lever Direction/Speed Control
Wide Control Lever Bends for Increased Operator Comfort
Quick-Service Removable Foot Platform
12 MPH Travel Speed
11.5 U.S. Gallon Fuel Capacity
24x12-12 In. Square Shoulder 4PR Turf Drive Tires
13x6.5-6 Semi-Pneumatic Front Caster Tires
Rear Bumper
Right Hand Control Console Cluster
Cup Holder
Fuel Gauge
Electric PTO Clutch
Digital Hourmeter and Diagnostic Pkg.
* @ 3600 RPM engine manufacturer certified gross power tested in accordance with SAE J1995, 852cc. The engine horsepower and torque information is provided by the engine manufacturer to be used for comparison purposes only. Actual operating horsepower and torque will be less. Refer to the engine manufacturer#s web site for additional information.

CODE	ATTACHMENT IDENTIFIER	DESCRIPTION	SUGGESTED LIST PRICE USD ($)

Select One Code From Each Required Category

BASE MACHINE

F.O.B. Raleigh, North Carolina

2190TC	Z950R Commercial ZTrak *Not Available for Sale in California.*	12,429.00

DESTINATION

0202	United States and Canada	In Base Price
0230	Australia and New Zealand	Same Price
0195	Mexico	Same Price
0250	Other	Same Price

MOWER DECK

1504	60 In. 7-Iron PRO Side Discharge Mower Deck *7-Gauge Stamped Steel Mower Deck. 8 In. Aluminum Spindle Housings. Rear Anti-Scalp Wheels.*	In Base Price
1505	60 In. 7-Iron PRO Mulch On Demand Mower Deck *7-Gauge Stamped Steel Mower Deck. 8 In. Aluminum Spindle Housings. Rear Anti-Scalp Wheels.*	870.00

Z950R Commercial ZTrak
Continued

CODE	ATTACHMENT IDENTIFIER	DESCRIPTION	SUGGESTED LIST PRICE USD ($)
		MOWER DECK Continued...	
1506		72 In. 7-Iron PRO Side Discharge Mower Deck *7-Gauge Stamped Steel Mower Deck. 8 In. Aluminum Spindle Housings. Rear Anti-Scalp Wheels.*	540.00
		SEATS	
2000		Deluxe Comfort Seat with Armrests	In Base Price
2001		Deluxe Comfort Seat with Armrests and Isolation *Includes Isolation System to Reduce Shock/Vibration*	195.00
2002		Fully Adjustable Suspension Seat with Armrests *Adjustable Back Rest and Lumbar Support. Adjustable for Operator Weight. Reduces Shock/Vibration and Increases Comfort.*	475.00
		ATTACHMENTS FOR FIELD CONVERSION	
		Engine:	
	AM115837	Spark Arrester Screen for Muffler	See Parts
		Miscellaneous:	
	TCB11281	Front Light (2) Kit	238.61
	TCB11531	Hitch Kit	32.10
	TCB11710	Large E-Crate Cover *Not for X-large E-Crate used on 72" deck machines.*	See Parts
	TCB11248	Trash Receptacle Kit	92.01
	TCB11711	X-Large E-Crate Cover *Not for large E-Crate used on 48"-60" deck machines.*	See Parts
		Mower Deck and Mower Deck Attachments:	
	TCB10953	Mulch Kit (60 In. 7-Iron, 7-Iron II and 7-Iron PRO)	319.93
	TCB10951	Mulch Kit (72 In. 7-Iron, 7-Iron II and 7-Iron PRO)	331.70
	BTC10286	Rubber Flap Striping Kit for 54" & 60" Decks	439.77
	BTC10287	Rubber Flap Striping Kit for 72" Deck	449.40
		Order Zone:	
	LP40112	Beacon Light Kit	In Catalog
	LP1400	Floor Mat	In Catalog
	LPA11548	Sun Canopy	In Catalog

Z960R Commercial ZTrak

Equipment for Base Machine

31.0 HP*
Vertical-Shaft Air Cooled Engine (61.0 Cu. In.) 999cc, 23.1 kW)
Full Pressure Lubrication System with Replaceable Oil Filter
Heavy Duty Canister Air Cleaner; Dry Replaceable Filter Element with Secondary Safety Element
12 Volt with 20 AMP Regulated Charge System
Dual Hydrostatic Wheel Drive
TuffTorq Heavy Duty Ground Drive With Cross Porting
Foot Actuated Parking Brake
Steel Channel Frame
Operator Presence System
Folding Two Post ROPS (Roll-Over Protective Structure) and Seat Belt
60 In. 7-Iron PRO Side Discharge Mower Deck
7-Gauge Stamped Steel Mower Deck
8 In. Aluminum Spindle Housing
Rear Anti-Scalp Wheels
One-Touch Dial and Power Height of Cut Adjustment
Ergonomic Operator Contoured Soft Touch Grips and Integrated Handle Controls
Single-Turn Deck Transport Lock System
Full Floating Suspension Deck
1.0 - 5.5 In. Cutting Heights in 0.25 In. Increments
Dual Lever Direction/Speed Control
Wide Control Lever Bends for Increased Operator Comfort
Quick-Service Removable Foot Platform
12 MPH Travel Speed
11.5 U.S. Gallon Fuel Capacity
24x12-12 In. Square Shoulder 4PR Turf Drive Tires
13x6.5-6 Semi-Pneumatic Front Caster Tires
Rear Bumper
Right Hand Control Console Cluster
Cup Holder
Fuel Gauge
Electric PTO Clutch
Digital Hourmeter and Diagnostic Pkg.
* @ 3600 RPM engine manufacturer certified gross power tested in accordance with SAE J1995, 999cc. The engine horsepower and torque information is provided by the engine manufacturer to be used for comparison purposes only. Actual operating horsepower and torque will be less. Refer to the engine manufacturer#s web site for additional information.

CODE	ATTACHMENT IDENTIFIER	DESCRIPTION	SUGGESTED LIST PRICE USD ($)

Select One Code From Each Required Category

BASE MACHINE

F.O.B. Raleigh, North Carolina

2200TC	Z960R Commercial ZTrak *Not Available for Sale in California.*	13,099.00

DESTINATION

0202	United States and Canada	In Base Price
0230	Australia and New Zealand	Same Price
0195	Mexico	Same Price
0250	Other	Same Price

MOWER DECK

1504	60 In. 7-Iron PRO Side Discharge Mower Deck *7-Gauge Stamped Steel Mower Deck. 8 In. Aluminum Spindle Housings. Rear Anti-Scalp Wheels.*	In Base Price
1505	60 In. 7-Iron PRO Mulch On Demand Mower Deck *7-Gauge Stamped Steel Mower Deck. 8 In. Aluminum Spindle Housings. Rear Anti-Scalp Wheels.*	870.00

Z960R Commercial ZTrak
Continued

CODE	ATTACHMENT IDENTIFIER	DESCRIPTION	SUGGESTED LIST PRICE USD ($)
		MOWER DECK Continued...	
1506		72 In. 7-Iron PRO Side Discharge Mower Deck *7-Gauge Stamped Steel Mower Deck. 8 In. Aluminum Spindle Housings. Rear Anti-Scalp Wheels.*	540.00
		SEATS	
2000		Deluxe Comfort Seat with Armrests	In Base Price
2001		Deluxe Comfort Seat with Armrests and Isolation *Includes Isolation System to Reduce Shock/Vibration*	195.00
2002		Fully Adjustable Suspension Seat with Armrests *Adjustable Back Rest and Lumbar Support. Adjustable for Operator Weight. Reduces Shock/Vibration and Increases Comfort.*	475.00
		ATTACHMENTS FOR FIELD CONVERSION	
		Engine:	
	AM115837	Spark Arrester Screen for Muffler	See Parts
		Miscellaneous:	
	TCB11281	Front Light (2) Kit	238.61
	TCB11531	Hitch Kit	32.10
	TCB11710	Large E-Crate Cover *Not for X-large E-Crate used on 72" deck machines.*	See Parts
	TCB11248	Trash Receptacle Kit	92.01
	TCB11711	X-Large E-Crate Cover *Not for large E-Crate used on 48"-60" deck machines.*	See Parts
		Mower Deck and Mower Deck Attachments:	
	TCB10953	Mulch Kit (60 In. 7-Iron, 7-Iron II and 7-Iron PRO)	319.93
	TCB10951	Mulch Kit (72 In. 7-Iron, 7-Iron II and 7-Iron PRO)	331.70
	BTC10286	Rubber Flap Striping Kit for 54" & 60" Decks	439.77
	BTC10287	Rubber Flap Striping Kit for 72" Deck	449.40
		Order Zone:	
	LP40112	Beacon Light Kit	In Catalog
	LP1400	Floor Mat	In Catalog
	LPA11548	Sun Canopy	In Catalog

Z970R Commercial ZTrak

Equipment for Base Machine

35.0 HP*
Vertical-Shaft Air Cooled Engine (61.0 Cu. In.) 999cc, 26.1 kW)
Full Pressure Lubrication System with Replaceable Oil Filter
Heavy Duty Canister Air Cleaner; Dry Replaceable Filter Element with Secondary Safety Element
12 Volt with 20 AMP Regulated Charge System
Dual Hydrostatic Wheel Drive
TuffTorq Heavy Duty Ground Drive With Cross Porting
Steel Channel Frame
Operator Presence System
Folding Two Post ROPS (Roll-Over Protective Structure) and Seat Belt
72 In. 7-Iron PRO Side Discharge Mower Deck
7-Gauge Stamped Steel Mower Deck
8 In. Aluminum Spindle Housing
Rear Anti-Scalp Wheels
One-Touch Dial and Power Height of Cut Adjustment
Ergonomic Operator Contoured Soft Touch Grips and Integrated Handle Controls
Single-Turn Deck Transport Lock System
Full Floating Suspension Deck
1.0 - 5.5 In. Cutting Heights in 0.25 In. Increments
Dual Lever Direction/Speed Control
Wide Control Lever Bends for Increased Operator Comfort
Quick-Service Removable Foot Platform
12 MPH Travel Speed
11.5 U.S. Gallon Fuel Capacity
24x12-12 In. Square Shoulder 4PR Turf Drive Tires
13x6.5-6 Semi-Pneumatic Front Caster Tires
Rear Bumper
Right Hand Control Console Cluster
Cup Holder
Fuel Gauge
Electric PTO Clutch
Digital Hourmeter and Diagnostic Pkg.
* @ 3600 RPM engine manufacturer certified gross power tested in accordance with SAE J1995, 999cc. The engine horsepower and torque information is provided by the engine manufacturer to be used for comparison purposes only. Actual operating horsepower and torque will be less. Refer to the engine manufacturer#s web site for additional information.

CODE	ATTACHMENT IDENTIFIER	DESCRIPTION	SUGGESTED LIST PRICE USD ($)

Select One Code From Each Required Category

BASE MACHINE

F.O.B. Raleigh, North Carolina

2210TC	Z970R Commercial ZTrak *Not Available for Sale in California.*	14,169.00

DESTINATION

0202	United States and Canada	In Base Price
0230	Australia and New Zealand	Same Price
0195	Mexico	Same Price
0250	Other	Same Price

MOWER DECK

1506	72 In. 7-Iron PRO Side Discharge Mower Deck *7-Gauge Stamped Steel Mower Deck. 8 In. Aluminum Spindle Housings. Rear Anti-Scalp Wheels.*	In Base Price

SEATS

2000	Deluxe Comfort Seat with Armrests	In Base Price

Z970R Commercial ZTrak
Continued

CODE	ATTACHMENT IDENTIFIER	DESCRIPTION	SUGGESTED LIST PRICE USD ($)
		SEATS Continued...	
2001		Deluxe Comfort Seat with Armrests and Isolation *Includes Isolation System to Reduce Shock/Vibration*	195.00
2002		Fully Adjustable Suspension Seat with Armrests *Adjustable Back Rest and Lumbar Support. Adjustable for Operator Weight. Reduces Shock/Vibration and Increases Comfort.*	475.00
		ATTACHMENTS FOR FIELD CONVERSION	
		Engine:	
	AM115837	Spark Arrester Screen for Muffler	See Parts
		Miscellaneous:	
	TCB11281	Front Light (2) Kit	238.61
	TCB11531	Hitch Kit	32.10
	TCB11248	Trash Receptacle Kit	92.01
	TCB11711	X-Large E-Crate Cover *Not for large E-Crate used on 48"-60" deck machines.*	See Parts
		Mower Deck and Mower Deck Attachments:	
	TCB10951	Mulch Kit (72 In. 7-Iron, 7-Iron II and 7-Iron PRO)	331.70
	BTC10287	Rubber Flap Striping Kit for 72" Deck	449.40
		Order Zone:	
	LP40112	Beacon Light Kit	In Catalog
	LP1400	Floor Mat	In Catalog
	LPA11548	Sun Canopy	In Catalog

60 In. 7-Iron PRO Commercial Side Discharge Mower Deck (For 997 Diesel ZTrak)

Equipment for Base Machine

60 In. Cutting Width
(3) HD Spindles, Blades
One Piece Stamped Deck
1.5-5.0 In. Height of Cut
Deep Deck Design
Quick Release Belt Shields
(2) Rear Adjustable
Gauge Wheel
Front and Rear Anti-Scalp Wheels
Steel Bar Reinforcement
Offset Spindles
8 In. Aluminum Spindle Housing
Hinged Side Discharge Chute
Greaseable Spindles
7-Iron PRO 7-Gauge (.177 In.)
Steel
Splined Shaft Drive
Baffling System

CODE	ATTACHMENT IDENTIFIER	DESCRIPTION	SUGGESTED LIST PRICE USD ($)
		Select One Code From Each Required Category	
		BASE MACHINE	
0336TC		60 In. 7-Iron PRO Commercial Side Discharge Mower Deck (For 997 Diesel ZTrak)	2,760.00
		ATTACHMENTS FOR FIELD CONVERSION	
		Mower Deck and Mower Deck Attachments:	
	TCB10953	Mulch Kit (60 In. 7-Iron, 7-Iron II and 7-Iron PRO)	319.93
	TCB11230	Roller Striping Kit for 60 In. Deck *For Model Year '11 and Later Power Units (Serial # 060000-) or Serialized Replacement Decks (Serial # 010001-).*	439.77

60 In. 7-Gauge Steel Commercial Rear Discharge Mower Deck (For 997 Diesel ZTrak Mowers

Equipment for Base Machine

60 In. Cutting Width
(3) HD Spindles, Blades
Fabricated Deck
1.5-5 In. Height of Cut
Deep Deck Design
Vehicle Enclosure Kit
Quick Release Belt Shields
Front Anti-Scalp Wheels
Steel Bar Reinforcement
Offset Spindles
8 In. Aluminum Spindle Housing
Rear Discharge Chute
Greaseable Spindles
7-Gauge (.177 In.) Steel
Splined Shaft Drive
Baffling System

CODE	ATTACHMENT IDENTIFIER	DESCRIPTION	SUGGESTED LIST PRICE USD ($)
		Select One Code From Each Required Category	
		BASE MACHINE	
0510TC		60 In. 7-Gauge Steel Commercial Rear Discharge Mower Deck (For 997 Diesel ZTrak Mowers	3,390.00

60 In. 7-Iron PRO Commercial Mulch-On-Demand Mower Deck (For 997 Diesel ZTrak)

Equipment for Base Machine

60 In. Cutting Width
(3) HD Spindles, Blades
One Piece Stamped Deck
1.5-5.0 In. Height of Cut
Mulch On Demand System
Deep Deck Design
Quick Release Belt Shields
(2) Rear Adjustable
Gauge Wheel
Front and Rear Anti-Scalp Wheels
Steel Bar Reinforcement
Offset Spindles
8 In. Aluminum Spindle Housing
Hinged Side Discharge Chute
Greaseable Spindles
7-Iron PRO 7-Gauge (.177 In.)
Steel
Splined Shaft Drive
Baffling System

CODE	ATTACHMENT IDENTIFIER	DESCRIPTION	SUGGESTED LIST PRICE USD ($)
		Select One Code From Each Required Category	
		BASE MACHINE	
0335TC		60 In. 7-Iron PRO Commercial Mulch-On-Demand Mower Deck (For 997 Diesel ZTrak)	3,630.00
		ATTACHMENTS FOR FIELD CONVERSION	
		Mower Deck and Mower Deck Attachments:	
	TCB11230	Roller Striping Kit for 60 In. Deck *For Model Year '11 and Later Power Units (Serial # 060000-) or Serialized Replacement Decks (Serial # 010001-).*	439.77

72 In. 7-Iron II Commercial Side Discharge Mower Deck (For 997 Diesel ZTrak Mowers)

Equipment for Base Machine

72 In. Cutting Width
(3) HD Spindles, Blades
One Piece Stamped Deck
1.5-5 In. Height of Cut
Deep Deck Design
Quick Release Belt Shields
(2) Rear Adjustable
Gauge Wheels
Front and Rear Anti-Scalp Wheels
Steel Bar Reinforcement
Offset Spindles
8 In. Aluminum Spindle Housing
Hinged Side Discharge Chute
Greaseable Spindles
7-Iron PRO 7-Gauge (.177 In.)
Steel
Splined Shaft Drive
Baffling System

CODE	ATTACHMENT IDENTIFIER	DESCRIPTION	SUGGESTED LIST PRICE USD ($)
		Select One Code From Each Required Category	
		BASE MACHINE	
0345TC		72 In. 7-Iron II Commercial Side Discharge Mower Deck (For 997 Diesel ZTrak Mowers)	3,180.00
		ATTACHMENTS FOR FIELD CONVERSION	
		Mower Deck and Mower Deck Attachments:	
	TCB10951	Mulch Kit (72 In. 7-Iron, 7-Iron II and 7-Iron PRO)	331.70
	TCB11231	Roller Striping Kit for 72 In. Deck *For Model Year '11 and Later Power Units (Serial # 060000-) or Serialized Replacement Decks (Serial # 010001-).*	439.77

8 Bushel 2-Bag Material Collection System (For 48 In./54 In./60 In. Z900 B Series and 48 In./54 In. Z900 M/R Series Mowers including Mulch-On-Demand Decks)

Equipment for Base Machine

```
2 Bag Collection Hopper
8 Bushel Capacity
ABS Plastic Hopper Top
Mechanical Hopper Top Lock
Horizontal 7-Iron
Blower Configuration
Steel Blower Housing
5 Blade Commercial Impeller
14 In. Impeller Diameter
Easy-To-Empty Bags
8 In. Diameter Chute
Quick Detach Blower
Weight Bracket
```

CODE	ATTACHMENT IDENTIFIER	DESCRIPTION	SUGGESTED LIST PRICE USD ($)
		Select One Code From Each Required Category	
		BASE MACHINE	
		F.O.B. Davenport, Iowa	
0786TC		8 Bushel 2-Bag Material Collection System (For 48 In./54 In./60 In. Z900 B Series and 48 In./54 In. Z900 M/R Series Mowers including Mulch-On-Demand Decks) *When Installing 2-Bag MCS on Z900 B Series Models, Rear Anti-Scalp Wheel Kit (BTC10445 for 48 In., BTC10442 for 54 In./60 In.) is Required.* *Not Compatible with Model Year 2012 and Prior ZTrak Mowers.* *Refer to Sales Manual for Proper Ballast Requirements.*	1,820.00
		DESTINATION	
001A		United States and Canada	In Base Price
001C		Australia and New Zealand	Same Price
		ATTACHING PARTS	
1003		Attaching Parts for 48 In. 7-Iron II and 7-Iron PRO Decks *For all Z900 B/M/R Series with 48" side discharge decks.*	In Base Price
1004		Attaching Parts for 60 In. Z900 B Series 7-Iron II Decks *For Z900B Series.*	In Base Price
1005		Attaching Parts for 48 In. and 54 In 7-Iron PRO Mulch-on-Demand Decks *For all Z900M/R Series with 48" & 54" Mulch-on-Demand decks.*	234.00
1006		Attaching Parts for 54 In. 7-Iron II and 7-Iron PRO Decks *For all Z900 B/M/R Series with 54" side discharge decks. DFS MCS for Z900 M & R Series only.*	In Base Price
		BLOWER	
2000		7-Iron Blower for 7-Iron, 7-Iron PRO and 7-Iron PRO Mulch-On-Demand Decks	In Base Price
2010		Less Blower	-728.00
		CHUTE	
3000		Chute	In Base Price

8 Bushel 2-Bag Material Collection System (For 48 In./54 In./60 In. Z900 B Series and 48 In./54 In. Z900 M/R Series Mowers including Mulch-On-Demand Decks)

Continued

CODE	ATTACHMENT IDENTIFIER	DESCRIPTION	SUGGESTED LIST PRICE USD ($)
		CHUTE Continued...	
3010		Less Chute	-137.00
		ATTACHMENTS FOR FIELD CONVERSION	
		Material Collection System:	
	TCB11690	7-Iron Blower for 7-Iron, 7-Iron PRO and 7-Iron PRO Mulch-On-Demand Decks	835.67
	BTC10360	Attaching Parts for 48 In. 7-Iron II and 7-Iron PRO Decks *For all Z900 B/M/R Series with 48" side discharge decks.*	865.63
	BTC10361	Attaching Parts for 48 In. and 54 In 7-Iron PRO Mulch-on-Demand Decks *For all Z900 M/R Series with 48" & 54" Mulch-on-Demand decks.*	1,112.80
	BTC10362	Attaching Parts for 54 In. 7-Iron II and 7-Iron PRO Decks *For all Z900 B/M/R Series with 54" side discharge decks.*	865.63
	BTC10366	Attaching Parts for 60 In. 7-Iron II Decks *For all Z900 B Series with 60" side discharge decks.*	865.63
	BTC10539	Chute	157.29
		Mower Deck and Mower Deck Attachments:	
	BTC10442	Rear Anti-Scalp Wheel Kit *For all Z900 B Series with 54" 7-Iron II side discharge decks.*	170.13
	BTC10591	Rear Anti-Scalp Wheel Kit *For all Z900 B Series with 60" 7-Iron II side discharge decks.*	170.13
	BTC10445	Rear Anti-Scalp Wheel Kit *For all Z900 B Series with 48" 7-Iron II side discharge decks.*	170.13
		Weights:	
	R66949	Quik-Tatch Weight, 42 Lb.	62.06

8 Bushel 2-Bag Material Collection System (For 48 In. / 54 In. / 60 In. Z-Trak Estate and 48 In. / 54 In. Z-Trak PRO Mowers including Mulch-On-Demand decks)

Equipment for Base Machine

```
2 Bag Collection Hopper
8 Bushel Capacity
ABS Plastic Hopper Top
Mechanical Hopper Top Lock
Horizontal 7-Iron
Blower Configuration
Steel Blower Housing
5 Blade Commercial Impeller
14 In. Impeller Diameter
Easy-To-Empty Bags
8 In. Diameter Chute
Quick Detach Blower
Weight Bracket
```

CODE	ATTACHMENT IDENTIFIER	DESCRIPTION	SUGGESTED LIST PRICE USD ($)
		Select One Code From Each Required Category	
		BASE MACHINE	
		F.O.B. Davenport, Iowa	
0783TC		8 Bushel 2-Bag Material Collection System (For 48 In. / 54 In. / 60 In. Z-Trak Estate and 48 In. / 54 In. Z-Trak PRO Mowers including Mulch-On-Demand decks) *When Installing 2-Bag MCS on ZTrak Estate Models, Rear Anti-Scalp Wheel Kit (TCB11228)are Required.* *Not Compatible with Model Year 2007 and Prior ZTrak Mowers.* *Refer to Sales Manual for Proper Ballast Requirements.*	1,810.00
		ATTACHING PARTS	
1003		Attaching Parts for 48 In. 7-Iron Estate and 7-Iron PRO Decks *For all Z500A, Z800A & Z900A with 48" side discharge decks.*	In Base Price
1004		Attaching Parts for 60 In. Z-Trak Estate *For Z520A.*	In Base Price
1005		Attaching Parts for 48 In. and 54 In 7-Iron PRO Mulch-on-Demand Decks *For all Z800A & Z900A with 48" & 54" Mulch-on-Demand decks.*	234.00
1006		Attaching Parts for 54 In. 7-Iron Estate and 7-Iron PRO Decks *For all Z500A, Z800A & Z900A with 54" side discharge decks.*	In Base Price
		BLOWER	
2000		7-Iron Blower for 7-Iron, 7-Iron PRO and 7-Iron PRO Mulch-On-Demand Decks	In Base Price
2010		Less Blower	-728.00
		CHUTE	
3000		Chute	In Base Price
3010		Less Chute	-137.00
		ATTACHMENTS FOR FIELD CONVERSION	
		Material Collection System:	
	TCB11690	7-Iron Blower for 7-Iron, 7-Iron PRO and 7-Iron PRO Mulch-On-Demand Decks	835.67

8 Bushel 2-Bag Material Collection System (For 48 In. / 54 In. / 60 In. Z-Trak Estate and 48 In. / 54 In. Z-Trak PRO Mowers including Mulch-On-Demand decks)

Continued

CODE	ATTACHMENT IDENTIFIER	DESCRIPTION	SUGGESTED LIST PRICE USD ($)
		ATTACHMENTS FOR FIELD CONVERSION Continued...	
	TCB11732	Attaching Parts for 48 In. 7-Iron Estate and 7-Iron PRO Decks *For all Z500A, Z800A & Z900A with 48" side discharge decks.*	865.63
	TCB11735	Attaching Parts for 48 In. and 54 In 7-Iron PRO Mulch-on-Demand Decks *For all Z800A & Z900A with 48" & 54" Mulch-on-Demand decks.*	1,112.80
	TCB11736	Attaching Parts for 54 In. 7-Iron Estate and 7-Iron PRO Decks *For all Z500A, Z800A & Z900A with 54" side discharge decks.*	865.63
	TCB11734	Attaching Parts for 60 In. Z-Trak Estate *For Z520A.*	865.63
	TCB11234	Chute	157.29
		Mower Deck and Mower Deck Attachments:	
	TCB11228	Rear Anti-Scalp Wheel Kit	170.13
		Weights:	
	R66949	Quik-Tatch Weight, 42 Lb.	62.06

14 Bushel 3-Bag Material Collection System (For 48 In./54 In./60 In. Z900 B/M/R Series And 72 In. Z900 M/R Series Mowers including Mulch-On-Demand Decks)

Equipment for Base Machine

3-Bag Collection Hopper
14 Bushel Capacity
Steel Hopper Top
Mechanical Hopper Top Lock
Horizontal 7-Iron
Blower Configuration
Steel Blower Housing
5 Blade Commercial Impeller
14 In. Impeller Diameter
Easy-To-Empty Bags
8 In. Diameter Chute
Quick Detach Blower
Weight Bracket

CODE	ATTACHMENT IDENTIFIER	DESCRIPTION	SUGGESTED LIST PRICE USD ($)
		Select One Code From Each Required Category	
		BASE MACHINE	
		F.O.B. Davenport, Iowa	
0788TC		14 Bushel 3-Bag Material Collection System (For 48 In./54 In./60 In. Z900 B/M/R Series And 72 In. Z900 M/R Series Mowers including Mulch-On-Demand Decks) *Not Compatible with Model Year 2012 and Prior Z-Trak Mowers.* *Not Compatible with Z-Trak Estate Mowers.* *Refer to Sales Manual for Proper Ballast Requirements.*	2,920.00
		DESTINATION	
001A		United States and Canada	In Base Price
001C		Australia and New Zealand	Same Price
		ATTACHING PARTS	
1005		Attaching Parts for 48 In. 7-Iron PRO Decks *For all Z900 B/M/R Series with 48" side discharge decks.* *DFS MCS for Z900 M & R Series only.*	In Base Price
1006		Attaching Parts for 60 In. 7-Iron PRO Decks *For all Z900 B/M/R Series with 60" side discharge decks.* *DFS MCS for Z900 M & R Series only.*	In Base Price
1007		Attaching Parts for 72 In. 7-Iron PRO Decks *For all Z900 M/R Series with 72" side discharge decks.*	In Base Price
1008		Attaching Parts for 48 In. and 54 In. 7-Iron PRO Mulch-on-Demand Decks *For all Z900 M/R Series with 48" & 54" Mulch-on-Demand decks.*	120.00
1009		Attaching Parts for 60 In. 7-Iron PRO Mulch-on-Demand Decks *For all Z900 M/R Series with 60" Mulch-on-Demand decks.*	120.00
1010		Less Attaching Parts	-1,048.00
1011		Attaching Parts for 54 In. 7-Iron PRO Decks *For all Z900 B/M/R Series with 54" side discharge decks.* *DFS MCS for Z900 M & R Series only.*	In Base Price

14 Bushel 3-Bag Material Collection System (For 48 In./54 In./60 In. Z900 B/M/R Series And 72 In. Z900 M/R Series Mowers including Mulch-On-Demand Decks)

Continued

CODE	ATTACHMENT IDENTIFIER	DESCRIPTION	SUGGESTED LIST PRICE USD ($)
		BLOWER	
2000		7-Iron Blower for 7-Iron, 7-Iron PRO and 7-Iron PRO Mulch-On-Demand Decks	In Base Price
2010		Less Blower	-728.00
		ATTACHMENTS FOR FIELD CONVERSION	
		Material Collection System:	
	TCB11690	7-Iron Blower for 7-Iron, 7-Iron PRO and 7-Iron PRO Mulch-On-Demand Decks	835.67
	BTC10221	Attaching Parts for 48 In. 7-Iron PRO Decks *For all Z900 B/M/R Series with 48" side discharge decks.* *DFS MCS for Z900 M & R Series only.*	1,202.69
	BTC10363	Attaching Parts for 54 In. 7-Iron PRO Decks *For all Z900 B/M/R Series with 54" side discharge decks.* *DFS MCS for Z900 M & R Series only.*	1,202.69
	BTC10368	Attaching Parts for 60 In. 7-Iron PRO Decks *For all Z900 B/M/R Series with 60" side discharge decks.* *DFS MCS for Z900 M & R Series only.*	1,178.07
	BTC10370	Attaching Parts for 72 In. 7-Iron PRO Decks *For all Z900 M/R Series with 72" side discharge decks.*	1,202.69
	BTC10365	Attaching Parts for 48 In. and 54 In. 7-Iron PRO Mulch-on-Demand Decks *For all Z900M/R Series with 48" & 54" Mulch-on-Demand decks.*	1,340.71
	BTC10369	Attaching Parts for 60 In. 7-Iron PRO Mulch-on-Demand Decks *For all Z900M/R Series with 60" Mulch-on-Demand decks.*	1,340.71
		Weights:	
	R66949	Quik-Tatch Weight, 42 Lb.	62.06

14 Bushel 3-Bag Material Collection System (For Z-Trak PRO 48 In./54 In./60 In./72 In. Mowers including Mulch-On-Demand Decks)

Equipment for Base Machine

3-Bag Collection Hopper
14 Bushel Capacity
Steel Hopper Top
Mechanical Hopper Top Lock
Horizontal 7-Iron
Blower Configuration
Steel Blower Housing
5 Blade Commercial Impeller
14 In. Impeller Diameter
Easy-To-Empty Bags
8 In. Diameter Chute
Quick Detach Blower
Weight Bracket

CODE	ATTACHMENT IDENTIFIER	DESCRIPTION	SUGGESTED LIST PRICE USD ($)
		Select One Code From Each Required Category	
		BASE MACHINE	
		F.O.B. Davenport, Iowa	
0784TC		14 Bushel 3-Bag Material Collection System (For Z-Trak PRO 48 In./54 In./60 In./72 In. Mowers including Mulch-On-Demand Decks) *Not Compatible with Model Year 2007 and Prior Z-Trak Mowers.* *Not Compatible with Z-Trak Estate Mowers.* *Refer to Sales Manual for Proper Ballast Requirements.*	2,830.00
		ATTACHING PARTS	
1005		Attaching Parts for 48 In. 7-Iron PRO Decks *For Model Year 2009 Z820A Serial Numbers 20001 and above.* *For Model Year 2010-up Z920A Serial Numbers 10001 and above.*	In Base Price
1006		Attaching Parts for 60 In. 7-Iron PRO Decks *For all Z800A, Z900A w/60" side discharge decks.*	In Base Price
1007		Attaching Parts for 72 In. 7-Iron PRO Decks *For all Z800A, Z900A with 72" side discharge decks*	In Base Price
1008		Attaching Parts for 48 In. and 54 In. 7-Iron PRO Mulch-on-Demand Decks *For all Z800A, Z900A with 48" & 54" Mulch-on-Demand decks*	120.00
1009		Attaching Parts for 60 In. 7-Iron PRO Mulch-on-Demand Decks *For all Z800A, Z900A with 60" Mulch-on-Demand decks.*	120.00
1010		Less Attaching Parts	-1,048.00
1011		Attaching Parts for 54 In. 7-Iron PRO Decks *For all Z800A, Z900A w/54" side discharge decks.*	In Base Price
		BLOWER	
2000		7-Iron Blower for 7-Iron, 7-Iron PRO and 7-Iron PRO Mulch-On-Demand Decks	In Base Price
2010		Less Blower	-728.00

ATTACHMENTS FOR FIELD CONVERSION

14 Bushel 3-Bag Material Collection System (For Z-Trak PRO 48 In./54 In./60 In./72 In. Mowers including Mulch-On-Demand Decks)

Continued

CODE	ATTACHMENT IDENTIFIER	DESCRIPTION	SUGGESTED LIST PRICE USD ($)
		ATTACHMENTS FOR FIELD CONVERSION Continued...	
		Material Collection System:	
	TCB11690	7-Iron Blower for 7-Iron, 7-Iron PRO and 7-Iron PRO Mulch-On-Demand Decks	835.67
	TCB11705	Attaching Parts for 48 In. 7-Iron PRO Decks *For Model Year 2009 Z820A Serial Numbers 20001 and above.* *For Model Year 2010-up Z920A Serial Numbers 10001 and above.*	1,202.69
	TCB11704	Attaching Parts for 54 In. 7-Iron PRO Decks *For all Z800A, Z900A w/54" side discharge decks.*	1,202.69
	TCB11686	Attaching Parts for 60 In. 7-Iron PRO Decks *For all Z800A, Z900A w/60" side discharge decks.*	1,178.07
	TCB11707	Attaching Parts for 72 In. 7-Iron PRO Decks *For all Z800A, Z900A with 72" side discharge decks.*	1,202.69
	TCB11703	Attaching Parts for 48 In. and 54 In. 7-Iron PRO Mulch-on-Demand Decks *For all Z800A, Z900A with 48" & 54" Mulch-on-Demand decks.*	1,340.71
	TCB11706	Attaching Parts for 60 In. 7-Iron PRO Mulch-on-Demand Decks *For all Z800A, Z900A with 60" Mulch-on-Demand decks*	1,340.71
		Weights:	
	R66949	Quik-Tatch Weight, 42 Lb.	62.06

14 Bushel Dump From Seat Material Collection System (For 48 In./54 In./60 In. Z900 B/M/R Series Mowers And 72 In. Z900 M/R Series Mowers including Mulch-On-Demand Decks)

Equipment for Base Machine

High Density Polypropylene Hopper
14 Bushel Capacity
Mechanical Dump From Operator Seat
Horizontal 7-Iron Blower Configuration
Steel Blower Housing
5 Blade Commercial Impeller
14 In. Impeller Diameter
8 In. Diameter Chute
Quick Detach Blower
Weight Bracket

CODE	ATTACHMENT IDENTIFIER	DESCRIPTION	SUGGESTED LIST PRICE USD ($)
		Select One Code From Each Required Category	
		BASE MACHINE	
		F.O.B. Davenport, Iowa	
0787TC		14 Bushel Dump From Seat Material Collection System (For 48 In./54 In./60 In. Z900 B/M/R Series Mowers And 72 In. Z900 M/R Series Mowers including Mulch-On-Demand Decks) *Not Compatible with Model Year 2012 and Prior Z-Trak Mowers.* *Not Compatible with Z-Trak Estate Mowers.* *Refer to Sales Manual for Proper Ballast Requirements.*	3,145.00
		DESTINATION	
001A		United States and Canada	In Base Price
001C		Australia and New Zealand	Same Price
		ATTACHING PARTS	
1005		Attaching Parts for 48 In. 7-Iron PRO Decks *For all Z900 B/M/R Series with 48" side discharge decks.* *DFS MCS for Z900 M & R Series only.*	In Base Price
1006		Attaching Parts for 60 In. 7-Iron PRO Decks *For all Z900 B/M/R Series with 60" side discharge decks.* *DFS MCS for Z900 M & R Series only.*	In Base Price
1007		Attaching Parts for 72 In. 7-Iron PRO Decks *For all Z900 M/R Series with 72" side discharge decks.*	In Base Price
1008		Attaching Parts for 48 In. and 54 In. 7-Iron PRO Mulch-on-Demand Decks *For all Z900 M/R Series with 48" & 54" Mulch-on-Demand decks.*	120.00
1009		Attaching Parts for 60 In. 7-Iron PRO Mulch-on-Demand Decks *For all Z900 M/R Series with 60" Mulch-on-Demand decks.*	120.00
1010		Less Attaching Parts	-1,048.00
1011		Attaching Parts for 54 In. 7-Iron PRO Decks *For all Z900 B/M/R Series with 54" side discharge decks.* *DFS MCS for Z900 M & R Series only.*	In Base Price

14 Bushel Dump From Seat Material Collection System (For 48 In./54 In./60 In. Z900 B/M/R Series Mowers And 72 In. Z900 M/R Series Mowers including Mulch-On-Demand Decks)

Continued

CODE	ATTACHMENT IDENTIFIER	DESCRIPTION	SUGGESTED LIST PRICE USD ($)
		BLOWER	
2000		7-Iron Blower for 7-Iron, 7-Iron PRO and 7-Iron PRO Mulch-On-Demand Decks	In Base Price
2010		Less Blower	-728.00
		ATTACHMENTS FOR FIELD CONVERSION	
		Material Collection System:	
	TCB11690	7-Iron Blower for 7-Iron, 7-Iron PRO and 7-Iron PRO Mulch-On-Demand Decks	835.67
	BTC10221	Attaching Parts for 48 In. 7-Iron PRO Decks *For all Z900 B/M/R Series with 48" side discharge decks.* *DFS MCS for Z900 M & R Series only.*	1,202.69
	BTC10363	Attaching Parts for 54 In. 7-Iron PRO Decks *For all Z900 B/M/R Series with 54" side discharge decks.* *DFS MCS for Z900 M & R Series only.*	1,202.69
	BTC10368	Attaching Parts for 60 In. 7-Iron PRO Decks *For all Z900 B/M/R Series with 60" side discharge decks.* *DFS MCS for Z900 M & R Series only.*	1,178.07
	BTC10370	Attaching Parts for 72 In. 7-Iron PRO Decks *For all Z900 M/R Series with 72" side discharge decks.*	1,202.69
	BTC10365	Attaching Parts for 48 In. and 54 In. 7-Iron PRO Mulch-on-Demand Decks *For all Z900M/R Series with 48" & 54" Mulch-on-Demand decks.*	1,340.71
	BTC10369	Attaching Parts for 60 In. 7-Iron PRO Mulch-on-Demand Decks *For all Z900M/R Series with 60" Mulch-on-Demand decks.*	1,340.71
		Weights:	
	R66949	Quik-Tatch Weight, 42 Lb.	62.06

14 Bushel Dump From Seat Material Collection System (For Z-Trak PRO 48 In./54 In./60 In./72 In. Mowers including Mulch-On-Demand Decks)

Equipment for Base Machine

High Density Polypropylene Hopper
14 Bushel Capacity
Mechanical Dump From Operator Seat
Horizontal 7-Iron Blower Configuration
Steel Blower Housing
5 Blade Commercial Impeller
14 In. Impeller Diameter
8 In. Diameter Chute
Quick Detach Blower
Weight Bracket

CODE	ATTACHMENT IDENTIFIER	DESCRIPTION	SUGGESTED LIST PRICE USD ($)

Select One Code From Each Required Category

BASE MACHINE

F.O.B. Davenport, Iowa

0785TC	14 Bushel Dump From Seat Material Collection System (For Z-Trak PRO 48 In./54 In./60 In./72 In. Mowers including Mulch-On-Demand Decks) *Not Compatible with Model Year 2007 and Prior Z-Trak Mowers.* *Not Compatible with Z-Trak Estate Mowers.* *Refer to Sales Manual for Proper Ballast Requirements.*	3,065.00

ATTACHING PARTS

1005	Attaching Parts for 48 In. 7-Iron PRO Decks *For Model Year 2009 Z820A Serial Numbers 20001 and above.* *For Model Year 2010-up Z920A Serial Numbers 10001 and above.*	In Base Price
1006	Attaching Parts for 60 In. 7-Iron PRO Decks *For all Z800A, Z900A w/60" side discharge decks.*	In Base Price
1007	Attaching Parts for 72 In. 7-Iron PRO Decks *For all Z800A, Z900A with 72" side discharge decks*	In Base Price
1008	Attaching Parts for 48 In. and 54 In. 7-Iron PRO Mulch-on-Demand Decks *For all Z800A, Z900A with 48" & 54" Mulch-on-Demand decks*	120.00
1009	Attaching Parts for 60 In. 7-Iron PRO Mulch-on-Demand Decks *For all Z800A, Z900A with 60" Mulch-on-Demand decks.*	120.00
1010	Less Attaching Parts	-1,048.00
1011	Attaching Parts for 54 In. 7-Iron PRO Decks *For all Z800A, Z900A w/54" side discharge decks.*	In Base Price

BLOWER

2000	7-Iron Blower for 7-Iron, 7-Iron PRO and 7-Iron PRO Mulch-On-Demand Decks	In Base Price
2010	Less Blower	-728.00

ATTACHMENTS FOR FIELD CONVERSION

14 Bushel Dump From Seat Material Collection System (For Z-Trak PRO 48 In./54 In./60 In./72 In. Mowers including Mulch-On-Demand Decks)

Continued

CODE	ATTACHMENT IDENTIFIER	DESCRIPTION	SUGGESTED LIST PRICE USD ($)
		ATTACHMENTS FOR FIELD CONVERSION Continued...	
		Material Collection System:	
	TCB11690	7-Iron Blower for 7-Iron, 7-Iron PRO and 7-Iron PRO Mulch-On-Demand Decks	835.67
	TCB11705	Attaching Parts for 48 In. 7-Iron PRO Decks *For Model Year 2009 Z820A Serial Numbers 20001 and above.* *For Model Year 2010-up Z920A Serial Numbers 10001 and above.*	1,202.69
	TCB11704	Attaching Parts for 54 In. 7-Iron PRO Decks *For all Z800A, Z900A w/54" side discharge decks.*	1,202.69
	TCB11686	Attaching Parts for 60 In. 7-Iron PRO Decks *For all Z800A, Z900A w/60" side discharge decks.*	1,178.07
	TCB11707	Attaching Parts for 72 In. 7-Iron PRO Decks *For all Z800A, Z900A with 72" side discharge decks.*	1,202.69
	TCB11703	Attaching Parts for 48 In. and 54 In. 7-Iron PRO Mulch-on-Demand Decks *For all Z800A, Z900A with 48" & 54" Mulch-on-Demand decks.*	1,340.71
	TCB11706	Attaching Parts for 60 In. 7-Iron PRO Mulch-on-Demand Decks *For all Z800A, Z900A with 60" Mulch-on-Demand decks*	1,340.71
		Weights:	
	R66949	Quik-Tatch Weight, 42 Lb.	62.06

8 Bushel 2-Bag Material Collection System
For 717A, 727A, 737 & 757 Mowers only

Equipment for Base Machine

2 Bag Collection Hopper
8 Bushel Capacity
Polyethylene Hopper Top
Mechanical Hopper Top Lock
Horizontal 7-Iron Blower Configuration
Steel Blower Housing
Lower Weight Bracket
5 Blade Commercial Impeller
14 In. Impeller Diameter
Easy-To-Empty Bags
7 In. Diameter Chute
Quick Detach Blower
Weight Bracket

CODE	ATTACHMENT IDENTIFIER	DESCRIPTION	SUGGESTED LIST PRICE USD ($)
		Select One Code From Each Required Category	
		BASE MACHINE	
		F.O.B. Davenport, Iowa	
0770TC		8 Bushel 2-Bag Material Collection System For 717A, 727A, 737 & 757 Mowers only *Compatible with both 7-Iron and 7-Iron II Decks. Due to Overall Power Consumption with 757 Mulch-On-Demand and MCS, this Combination is not Recommended.* *Refer to Sales Manual for Proper Ballast Requirements.*	2,010.00
		FRONT WEIGHTS	
2000		(2) Caster Wheel Weights for 717A, 727A Mini-Frame Z-TRAK 7-Iron and 7-Iron II Mowers	In Base Price
2001		Lower Weight Bracket for 737, 757, 757 Mulch on Demand Mid-Frame Z-TRAK 7-Iron and 7-Iron II Mowers *Requires (2) R66949 42 Lb. Quik-Tatch Weights.*	In Base Price
		ATTACHING PARTS	
3000		Attaching Parts for 48 In. and 54 In. 7-Iron and 7-Iron II Decks (717A, 727A)	In Base Price
3001		Attaching Parts for 54 In. 7-Iron and 7-Iron II Decks (737, 757)	In Base Price
3002		Attaching Parts for 60 In. 7-Iron and 7-Iron II Decks (737, 757)	In Base Price
3003		Attaching Parts for 60 In. 7-Iron and 7-Iron II Mulch on Demand Deck (757)	In Base Price
3010		Less Attaching Parts	-426.00
		ATTACHMENTS FOR FIELD CONVERSION	
		Material Collection System:	
	TCB11690	7-Iron Blower for 7-Iron, 7-Iron PRO and 7-Iron PRO Mulch-On-Demand Decks	835.67
	TCB11075	Attaching Parts for 48 In. and 54 In. 7-Iron and 7-Iron II Decks (717A, 727A)	488.99
	TCB11074	Attaching Parts for 54 In. 7-Iron and 7-Iron II Decks (737, 757)	488.99

8 Bushel 2-Bag Material Collection System
For 717A, 727A, 737 & 757 Mowers only

Continued

CODE	ATTACHMENT IDENTIFIER	DESCRIPTION	SUGGESTED LIST PRICE USD ($)
		ATTACHMENTS FOR FIELD CONVERSION Continued...	
	TCB11088	Attaching Parts for 60 In. 7-Iron and 7-Iron II Mulch on Demand Deck (757)	488.99
	TCB11076	Attaching Parts for 60 In. 7-Iron and 7-Iron II Decks (737, 757)	See Parts
	TCB11234	Chute	157.29
		Weights:	
	TCB10900	(1) Caster Wheel Weight *For 717A, 727A Mini-Frame Z-TRAK Mowers. Requires Additional Attaching Hardware: (1) N231578 (2) E54809, (2) 24M7180.*	133.76
	TCB11099	Lower Weight Bracket *Requires R66949 Quik-Tatch Weight 42 lb., Refer to Sales Manual for Proper Ballast Requirements.*	153.01
	R66949	Quik-Tatch Weight, 42 Lb.	62.06

14 Bushel 3-Bag Material Collection System For 737, 757, 777, 797 Mowers only

Equipment for Base Machine

3-Bag Collection Hopper
14 Bushel Capacity
Polyethylene Hopper Top
 with Gas Cylinder Lift Assist
  and Mechanical Hopper Top Lock
Horizontal 7-Iron Blower
 Configuration
Steel Blower Housing
Upper and Lower Weight Brackets
5 Blade Commercial Impeller
14 In. Impeller Diameter
Easy-To-Empty Bags
8 In. Diameter Chute
Quick Detach Blower

CODE	ATTACHMENT IDENTIFIER	DESCRIPTION	SUGGESTED LIST PRICE USD ($)
		Select One Code From Each Required Category	
		BASE MACHINE	
		F.O.B. Davenport, Iowa	
0771TC		14 Bushel 3-Bag Material Collection System For 737, 757, 777, 797 Mowers only *Compatible with both 7-Iron and 7-Iron II Decks. Due to Overall Power Consumption with 757 Mulch-On-Demand and MCS, this Combination is not Recommended. Refer to Sales Manual for Proper Ballast Requirements.*	2,660.00
		CHUTES	
1000		Chute for 54 In. and 60 In. 7-Iron and 7-Iron II Decks (737, 757) and 757 Mulch-On-Demand	In Base Price
1001		Chute for 60 In. 7-Iron and 7-Iron II Decks (777, 797 and 777 Mulch on Demand)	In Base Price
1002		Chute for 72 In. 7-Iron and 7-Iron II Decks (777, 797)	In Base Price
1010		Less Chute	-208.00
		ATTACHING PARTS	
3000		Attaching Parts for 54 In. 7-Iron and 7-Iron II Decks (737, 757)	In Base Price
3001		Attaching Parts for 60 In. and 72 In. 7-Iron and 7-Iron II Decks (737, 757, 777, 797)	In Base Price
3002		Attaching Parts for 60 In. 7-Iron and 7-Iron II Mulch on Demand Decks (757, 777)	In Base Price
3010		Less Attaching Parts	-426.00
		ATTACHMENTS FOR FIELD CONVERSION	
		Material Collection System:	
	TCB11690	7-Iron Blower for 7-Iron, 7-Iron PRO and 7-Iron PRO Mulch-On-Demand Decks	835.67
	TCB11048	Attaching Parts for 54 In. 7-Iron and 7-Iron II Decks (737, 757)	488.99
	TCB11050	Attaching Parts for 60 In. 7-Iron and 7-Iron II Mulch on Demand Decks (757, 777)	488.99

14 Bushel 3-Bag Material Collection System For 737, 757, 777, 797 Mowers only
Continued

CODE	ATTACHMENT IDENTIFIER	DESCRIPTION	SUGGESTED LIST PRICE USD ($)
		ATTACHMENTS FOR FIELD CONVERSION Continued...	
	TCB11047	Attaching Parts for 60 In. and 72 In. 7-Iron and 7-Iron II Decks (737, 757, 777, 797)	488.99
	TCB11079	Chute for 54 In. and 60 In.7-Iron and 7-Iron II Decks (737, 757) and 757 Mulch-On-Demand	237.54
	TCB11052	Chute for 60 In. 7-Iron and 7-Iron II Decks (777, 797 and 777 Mulch on Demand)	237.54
	TCB11053	Chute for 72 In. 7-Iron and 7-Iron II Decks (777, 797)	237.54
		Weights:	
	TCB11099	Lower Weight Bracket *Requires R66949 Quik-Tatch Weight 42 lb., Refer to Sales Manual for Proper Ballast Requirements.*	153.01
	R66949	Quik-Tatch Weight, 42 Lb.	62.06
	TCB11100	Upper Weight Bracket *Requires R66949 Quik-Tatch Weight 42 lb., Refer to Sales Manual for Proper Ballast Requirements.*	123.06

14 Bushel Dump From Seat Material Collection System for 737, 757, 777 & 797 Mowers only

Equipment for Base Machine

Polypropylene Hopper
14 Bushel Capacity
Mechanical Dump From Operator Seat
Attaching Framework
Horizontal 7-Iron Blower Configuration
Steel Blower Housing
Upper and Lower Weight Brackets
5 Blade Commercial Impeller
14 In. Impeller Diameter
8 In. Diameter Chute
Quick Detach Blower
Weight Bracket

CODE	ATTACHMENT IDENTIFIER	DESCRIPTION	SUGGESTED LIST PRICE USD ($)
		Select One Code From Each Required Category	
		BASE MACHINE	
		F.O.B. Raleigh, North Carolina	
0772TC		14 Bushel Dump From Seat Material Collection System for 737, 757, 777 & 797 Mowers only *Compatible with both 7-Iron and 7-Iron II Decks. Due to Overall Power Consumption with 757 Mulch-On-Demand and MCS, this Combination is not Recommended.* *Refer to Sales Manual for Proper Ballast Requirements.*	2,950.00
		CHUTES	
1000		Chute for 54 In. and 60 In. 7-Iron and 7-Iron II Decks (737, 757) and 757 Mulch-On-Demand	In Base Price
1001		Chute for 60 In. 7-Iron and 7-Iron II Decks (777, 797 and 777 Mulch on Demand)	In Base Price
1002		Chute for 72 In. 7-Iron and 7-Iron II Decks (777, 797)	In Base Price
1010		Less Chute	-208.00
		ATTACHING PARTS	
3000		Attaching Parts for 54 In. 7-Iron and 7-Iron II Decks (737, 757)	In Base Price
3001		Attaching Parts for 60 In. and 72 In. 7-Iron and 7-Iron II Decks (737, 757, 777, 797)	In Base Price
3002		Attaching Parts for 60 In. 7-Iron and 7-Iron II Mulch on Demand Decks (757, 777)	In Base Price
3010		Less Attaching Parts	-426.00
		ATTACHMENTS FOR FIELD CONVERSION	
		Material Collection System:	
	TCB11690	7-Iron Blower for 7-Iron, 7-Iron PRO and 7-Iron PRO Mulch-On-Demand Decks	835.67
	TCB11048	Attaching Parts for 54 In. 7-Iron and 7-Iron II Decks (737, 757)	488.99
	TCB11050	Attaching Parts for 60 In. 7-Iron and 7-Iron II Mulch on Demand Decks (757, 777)	488.99

14 Bushel Dump From Seat Material Collection System for 737, 757, 777 & 797 Mowers only

Continued

CODE	ATTACHMENT IDENTIFIER	DESCRIPTION	SUGGESTED LIST PRICE USD ($)
		ATTACHMENTS FOR FIELD CONVERSION Continued...	
	TCB11047	Attaching Parts for 60 In. and 72 In. 7-Iron and 7-Iron II Decks (737, 757, 777, 797)	488.99
	TCB11079	Chute for 54 In. and 60 In.7-Iron and 7-Iron II Decks (737, 757) and 757 Mulch-On-Demand	237.54
	TCB11052	Chute for 60 In. 7-Iron and 7-Iron II Decks (777, 797 and 777 Mulch on Demand)	237.54
	TCB11053	Chute for 72 In. 7-Iron and 7-Iron II Decks (777, 797)	237.54
		Weights:	
	TCB11099	Lower Weight Bracket *Requires R66949 Quik-Tatch Weight 42 lb., Refer to Sales Manual for Proper Ballast Requirements.*	153.01
	R66949	Quik-Tatch Weight, 42 Lb.	62.06
	TCB11100	Upper Weight Bracket *Requires R66949 Quik-Tatch Weight 42 lb., Refer to Sales Manual for Proper Ballast Requirements.*	123.06

13 Bushel Dump From Seat Material Collection System For 997 60/72 In. Side Discharge Diesel Z-TRAK Mowers

Equipment for Base Machine

High Density Polyethylene Hopper
Tubular Steel Frame With Polypropylene Fabric Door
13 Bushel Capacity
Mechanical Dump From Operator Seat
Attaching Framework
7-Iron Blower
Steel Blower Housing
Upper Weight Bracket
14 In. Impeller Diameter
6 In. Diameter Chute
Quick Detach Blower
Weight Bracket

CODE	ATTACHMENT IDENTIFIER	DESCRIPTION	SUGGESTED LIST PRICE USD ($)
		Select One Code From Each Required Category	
		BASE MACHINE	
		F.O.B. Raleigh, North Carolina	
0774TC		13 Bushel Dump From Seat Material Collection System For 997 60/72 In. Side Discharge Diesel Z-TRAK Mowers *Compatible with 7-Iron PRO Decks.* *Not Compatible with Mini, Mid, Max Frame Ztraks and 997/60 In. Rear Discharge Ztrak. Machines with 7-Iron and 7-Iron II Decks or serial numbers prior to 060001 must order BTC10022.* *Refer to Sales Manual for Proper Ballast Requirements.*	3,395.00
		BLOWER	
2000		7-Iron Blower for 7-Iron, 7-Iron PRO and 7-Iron PRO Mulch-On-Demand Decks	In Base Price
2010		Less 7-Iron Blower for 7-Iron, 7-Iron PRO and 7-Iron PRO Mulch-On-Demand Decks	-715.00
		ATTACHMENTS FOR FIELD CONVERSION	
		Material Collection System:	
	TCB11690	7-Iron Blower for 7-Iron, 7-Iron PRO and 7-Iron PRO Mulch-On-Demand Decks	835.67
	BTC10022	Attaching Parts for Blower	85.60
		Weights:	
	R66949	Quik-Tatch Weight, 42 Lb.	62.06
	DMA210494	Upper Weight Bracket (997) *Equipment for Base Machine Weight Bracket, Order if so needed. Refer to Sales Manual for Proper Ballast Requirements. Refer to Parts Catalog for Additional Required Hardware.*	See Parts

13 Bushel Dump From Seat Material Collection System For 997 60/72 In. Side Discharge Diesel Z-TRAK Mowers

Equipment for Base Machine

High Density Polyethylene Hopper
Tubular Steel Frame With
Polypropylene Fabric Door
13 Bushel Capacity
Mechanical Dump From Operator
Seat
Attaching Framework
7-Iron Blower
Steel Blower Housing
Upper Weight Bracket
14 In. Impeller Diameter
6 In. Diameter Chute
Quick Detach Blower
Weight Bracket

CODE	ATTACHMENT IDENTIFIER	DESCRIPTION	SUGGESTED LIST PRICE USD ($)

Select One Code From Each Required Category

BASE MACHINE

F.O.B. Raleigh, North Carolina

0775TC	13 Bushel Dump From Seat Material Collection System For 997 60/72 In. Side Discharge Diesel Z-TRAK Mowers *For MY13 997 with 60/72 In. side discharge decks and 60 In. Mulch-On-Demand decks only. Refer to Sales Manual for Proper Ballast Requirements.*	3,395.00

DESTINATION

001A	United States and Canada	In Base Price
001B	Europe	Same Price
001C	Australia and New Zealand	Same Price
001D	Other	Same Price

ATTACHING PARTS

3405	Attaching Parts for 60 In. 7-Iron PRO Decks *For all 997 w/60" side discharge decks.*	In Base Price
3406	Attaching Parts for 72 In. 7-Iron PRO Decks *For all 997 w/72" side discharge decks.*	13.00
3408	Attaching Parts for 60 In. 7-Iron PRO Mulch-On-Demand Decks *For all 997 w/60" Mulch-On-Demand decks.*	188.00
3490	Less Attaching Parts	-284.00

BLOWER

3500	7-Iron Blower for 7-Iron PRO and 7-Iron PRO Mulch-On-Demand Decks	In Base Price
3520	Less Blower	-715.00

ATTACHMENTS FOR FIELD CONVERSION

13 Bushel Dump From Seat Material Collection System For 997 60/72 In. Side Discharge Diesel Z-TRAK Mowers

Continued

CODE	ATTACHMENT IDENTIFIER	DESCRIPTION	SUGGESTED LIST PRICE USD ($)
		ATTACHMENTS FOR FIELD CONVERSION Continued...	
		Material Collection System:	
	TCB11690	7-Iron Blower for 7-Iron, 7-Iron PRO and 7-Iron PRO Mulch-On-Demand Decks	835.67
	BTC10264	Attaching Parts for Blower *For all 997 with 72" side discharge decks.*	340.26
	BTC10265	Attaching Parts for Blower *For all 997 with 60" Mulch-On-Demand decks.*	540.36
	BTC10266	Attaching Parts for Blower *For all 997 with 60" side discharge decks.*	326.36
		Weights:	
	R66949	Quik-Tatch Weight, 42 Lb.	62.06
	DMA210494	Upper Weight Bracket (997) *Equipment for Base Machine Weight Bracket, Order if so needed. Refer to Sales Manual for Proper Ballast Requirements. Refer to Parts Catalog for Additional Required Hardware.*	See Parts

Current Attachments for Non-Current Commercial Zero-Turn-Radius Mowers and Equipment

CODE	ATTACHMENT IDENTIFIER	DESCRIPTION	SUGGESTED LIST PRICE USD ($)
		ATTACHMENTS FOR FIELD CONVERSION	
		2-Bag Material Collection System (0751TC):	
	TCB10596	Power Flow Chute	128.40
		Miscellaneous:	
	TCB10455	Deck Platform Footrest Kit	See Parts
	TCB10967	Deluxe Comfort Seat with Armrests	520.01
	TCB10035	Front Light (2) Kit	See Parts
	TCB10418	Two Wheels with 20X10-10 Turf Drive Tires	See Parts
	TCB10432	Two Wheels with 20X11-10 Knobby Traction Tires	See Parts
	TCB10975	Upper ROPS Hoop *Certified to Meet SAE J2194. For Use with Standard Folding ROPS.*	See Parts

1420 Series II Commercial Front Mower (Less Mower Deck)

Equipment for Base Machine

25.6 Gross (24 Net) HP Yanmar Three Cylinder Liquid-Cooled Gas Engine (53.6 Cu. In.)
Dual Element Air Cleaner
Air Restrictor Indicator
12V Electric Start
12V Outlet
55 AMP Automotive Alternator
16 U.S. Gallon Fuel Capacity
Two Pedal Hydrostatic Foot Control
Hydrostatic Transmission
Hydrostatic Front Wheel Drive
Hydrostatic Power Steering
Differential Front Wheel Lock
Locking Engine Compartment
Front Light
23x10.50-12 In. 4PR Turf Drive Tires
18x8.50-8 In. 4PR Turf Steering Tires (2WD)
18x8.50-10 In. 4PR Turf Steering Tires (4WD)
Transmission Oil Cooler
Individual Turn Assist Brakes
Wet Disk Brakes
Master Stop Brake
Dual Hydraulic Implement Lift Cylinders
Less Mower Deck
Hourmeter
Fuel Gauge
Tilt Steering Wheel
Storage Bin
Live Independent PTO
PTO Shaft Drive
Operator Presence System
Low Oil Pressure Warning Light
Deluxe Suspension Seat with Armrests
Folding Two Post ROPS (Roll-Over Protective Structure) and Retractable Seat Belt
Cast Iron Rear Bumper
Operator Training Video
Hydraulic Oil Temp. Light-Buzzer-PTO Kill

CODE	ATTACHMENT IDENTIFIER	DESCRIPTION	SUGGESTED LIST PRICE USD ($)

Select One Code From Each Required Category

BASE MACHINE

F.O.B. Raleigh, North Carolina

0065TC		1420 Series II Commercial Front Mower (Less Mower Deck)	18,280.00

DRIVE SYSTEM

1000		Two Wheel Drive	In Base Price
1001		Four Wheel Drive (Full Time or On Demand)	2,913.00

DRIVE WHEELS WITH TIRES (TWO)

2000		23x10.50-12 4PR Turf Drive Tires	In Base Price
2001		23x8.50-12 4PR Turf Drive Tires	-35.00
2010		Less Drive Wheels and Tires	-332.00

SEATS

3000		Deluxe Suspension Seat with Armrests	In Base Price
3001		Comfort Adjust Suspension Seat with Armrests	66.00
3002		Air Ride Suspension Seat with Armrests	468.00

ATTACHMENTS FOR FIELD CONVERSION

		Engine:	
	AR87167	Engine Coolant Heater (110 Volt)	See Parts
		Hydraulics:	
	TCB11475	Double Spool Auxiliary Hydraulic Kit	714.76

1420 Series II Commercial Front Mower (Less Mower Deck)
Continued

CODE	ATTACHMENT IDENTIFIER	DESCRIPTION	SUGGESTED LIST PRICE USD ($)
		ATTACHMENTS FOR FIELD CONVERSION Continued...	
	TCB10566	Hydraulic Weight Transfer Kit	299.60
	TCB11474	Single Spool Auxiliary Hydraulic Kit	510.39
		Miscellaneous:	
	TCB10325	(1) Exterior Mirror Kit *Mounts to 4-Post ROPS.*	160.50
	BTC10293	4-Post ROPS Conversion Kit with Canopy *Converts Standard 2-Post ROPS to 4-Post with Canopy.* **Required for new Hard Cab BTC10295.* **Required for new Soft Cab BTC10336.* *(Not compatible with Old Hard Cab BTC10024 and Old Soft Cab BTC10023).* ***Discontinued - 4 Post ROPS Kit TCB10941 only compatible with Old Hard Cab BTC10024 and Old Soft Cab BTC10023.*	1,667.06
	TCB11198	4-Post ROPS Upgrade Kit *Kit Contains Wiring Harness, Acoustic Headliner, Work Lights and Hardware. Requires TCB10941 4-Post ROPS Conversion Kit with Canopy. Kit is not Required if Ordering a Soft or Hard Cab.*	850.66
	TCB11372	Air Ride Suspension Seat with Armrests	1,501.21
	TCB10538	Breakaway Beacon Light *Hard or Soft Cab with 4-Post ROPS Required.*	315.66
	TCB11274	Comfort Adjust Suspension Seat with Armrests *Requires TCB11275 Seat Bracket Kit.*	783.24
	TCB11273	Deluxe Suspension Seat with Armrests	963.00
	TCB10608	Electronic Cruise Control Kit	284.61
	TCB10620	Front Windshield *Can be Used without Cab for Wind Protection. Mounts to 4-Post ROPS.*	492.20
	TCB11095	Front Worklight (2) Kit *Requires 4-Post ROPS Conversion Kit with Canopy.*	178.69
	TCA12055	Orifice Kit *Slows Mower Deck Rate of Drop.*	See Parts
	TCB10305	Rear Hitch	110.21
	TCB11275	Seat Bracket Kit *For Comfort Adjust Suspension Seat (TCB11274).*	260.01
	TCB10981	Single Speed Front Windshield Wiper	371.29
	TCA12058	Slow Moving Vehicle (SMV) Kit	See Parts
	TY15956	Tire Chains (Pair) for 23x10.50-12 In. Drive Tires	See Parts

1420 Series II Commercial Front Mower (Less Mower Deck)
Continued

CODE	ATTACHMENT IDENTIFIER	DESCRIPTION	SUGGESTED LIST PRICE USD ($)
		ATTACHMENTS FOR FIELD CONVERSION Continued...	
	TY15841	Tire Chains (Pair) for 23x8.50-12 In. Drive Tires	See Parts
	TCA13791	Vehicle Enclosure Kit	See Parts
		Weights:	
	BM17985	Mounting Hardware (1) for Attaching One Wheel Weight *Attaches (1) 50 lb. Weight to GTs, GXs, X500 M-Ts and F1400s.*	11.77
	R66949	Quik-Tatch Weight, 42 Lb.	62.06
	TCB10303	Rear Weight Mounting Kit *Recommended for Ballast when Using Certain Implements. See Sales Manual for Instructions.*	103.79
		Wheels and Tires Front:	
	TCB10013	Dual Wheel Conversion Kit For 23x8.50-12 In. Drive Tires	282.49
	TCB10502	Two Wheels with 23x10.50-12 In. 4PR Turf Drive Tires	380.91
	TCB10413	Two Wheels with 23x8.50-12 In. 4PR Turf Drive Tires	352.03
		SERVICE CONTRACTS - RESIDENTIAL OWNERS/USE	
		Visit http://www.JohnDeere.com/ServicePlans for more information on John Deere Service Contracts. May not be Available in Parts of the U.S., Not Available in Canada. Price may vary due to driving distance and/or time from machine to dealership location.	
		John Deere Extended Service Plan - 3-Year Option *3-year extended service plan. (1 year of extended service protection); 3-years of warranty transportation.*	469.99
		John Deere Extended Service Plan - 4-Year Option *4-year extended service plan. (2 years of extended service protection); 4-years of warranty transportation.*	869.99

1435 Series II Commercial Front Mower (Less Mower Deck)

Equipment for Base Machine

24.2 Gross HP Yanmar Three Cylinder Liquid-Cooled Diesel Engine (62 Cu. In.)
Dual Element Air Cleaner
Air Restrictor Indicator
12V Electric Start
12V Outlet
55 AMP Automotive Alternator
16 U.S. Gallon Fuel Capacity
Two Pedal Hydrostatic Foot Control
Hydrostatic Transmission
Hydrostatic Front Wheel Drive
Hydrostatic Power Steering
Differential Front Wheel Lock
Locking Engine Compartment
Front Light
23x10.50-12 In. 4PR Turf Drive Tires
18x8.50-8 In. 4PR Turf Steering Tires (2WD)
18x8.50-10 In. 4PR Turf Steering Tires (4WD)
Transmission Oil Cooler
Individual Turn Assist Brakes
Wet Disk Brakes
Master Stop Brake
Dual Hydraulic Implement Lift Cylinders
Less Mower Deck
Hourmeter
Fuel Gauge
Tilt Steering Wheel
Storage Bin
Live Independent PTO
PTO Shaft Drive
Operator Presence System
Low Oil Pressure Warning Light
Deluxe Suspension Seat with Armrests
Folding Two Post ROPS (Roll-Over Protective Structure) and Retractable Seat Belt
Cast Iron Rear Bumper
Operator Training Video
Hydraulic Oil Temp. Light-Buzzer-PTO Kill

CODE	ATTACHMENT IDENTIFIER	DESCRIPTION	SUGGESTED LIST PRICE USD ($)

Select One Code From Each Required Category

BASE MACHINE

F.O.B. Raleigh, North Carolina

0077TC	1435 Series II Commercial Front Mower (Less Mower Deck)	18,420.00

DRIVE SYSTEM

1000	Two Wheel Drive	In Base Price
1001	Four Wheel Drive (Full Time or On Demand)	2,913.00

DRIVE WHEELS WITH TIRES (TWO)

2000	23x10.50-12 4PR Turf Drive Tires	In Base Price
2001	23x8.50-12 4PR Turf Drive Tires	-35.00
2010	Less Drive Wheels and Tires	-332.00

SEATS

3000	Deluxe Suspension Seat with Armrests	In Base Price
3001	Comfort Adjust Suspension Seat with Armrests	66.00
3002	Air Ride Suspension Seat with Armrests	468.00

ATTACHMENTS - ORDER AS DESIRED

1435 Series II Commercial Front Mower (Less Mower Deck)

Continued

CODE	ATTACHMENT IDENTIFIER	DESCRIPTION	SUGGESTED LIST PRICE USD ($)
		ATTACHMENTS - ORDER AS DESIRED Continued...	
		European CE Kit:	
9100		European CE Conversion Kit, 1400 Series II and 1500 Series II Tractor Unit *This Code Must be Ordered to Receive a 1400 Series II or 1500 Series II Commercial Front Mower Which Meets CE Mark Requirements. Kit will Include Seat Lockdown Latch, Pictorial Decals and Operator's Manual in English, French, German, Spanish and Italian.*	28.00
		ATTACHMENTS FOR FIELD CONVERSION	
		Engine:	
	TCA19916	B20 Biodiesel Conversion Kit	See Parts
	AR87167	Engine Coolant Heater (110 Volt)	See Parts
		European CE Kit:	
	TCB10691	European CE Lift Arm Extension Kit *This Bundle Must be Ordered with a 72 In. Side Discharge Mower Deck if Front Mowers are Equipped with TCB10690 European CE Road Homologation Kit.*	372.36
	TCB10690	European CE Road Homologation Kit *Kit Includes Front Hitch Assembly with Attaching Hardware, Front and Rear Turn Signals, Flashers, Horn, 7 Pin Connector Kit, License Plate Bracket with Lights, (2) ROPS Mounted Working Lights, Hazard Switch, Wiring Harness and Turn Brake Pedals with Locking Latch. Homologation Kit Requires TCB10941, 4-Post ROPS Conversion Kit with Canopy and TCB11198 4-Post ROPS Upgrade Kit.*	2,310.13
		Hydraulics:	
	TCB11475	Double Spool Auxiliary Hydraulic Kit	714.76
	TCB10566	Hydraulic Weight Transfer Kit	299.60
	TCB11474	Single Spool Auxiliary Hydraulic Kit	510.39
		Miscellaneous:	
	TCB10325	(1) Exterior Mirror Kit *Mounts to 4-Post ROPS.*	160.50
	BTC10293	4-Post ROPS Conversion Kit with Canopy *Converts Standard 2-Post ROPS to 4-Post with Canopy.* **Required for new Hard Cab BTC10295.* **Required for new Soft Cab BTC10336.* *(Not compatible with Old Hard Cab BTC10024 and Old Soft Cab BTC10023).* ***Discontinued - 4 Post ROPS Kit TCB10941 only compatible with Old Hard Cab BTC10024 and Old Soft Cab BTC10023.*	1,667.06
	TCB11198	4-Post ROPS Upgrade Kit *Kit Contains Wiring Harness, Acoustic Headliner, Work Lights and Hardware. Requires TCB10941 4-Post ROPS Conversion Kit with Canopy. Kit is not Required if Ordering a Soft or Hard Cab.*	850.66

1435 Series II Commercial Front Mower (Less Mower Deck)

Continued

CODE	ATTACHMENT IDENTIFIER	DESCRIPTION	SUGGESTED LIST PRICE USD ($)
		ATTACHMENTS FOR FIELD CONVERSION Continued...	
	TCB11372	Air Ride Suspension Seat with Armrests	1,501.21
	TCB10538	Breakaway Beacon Light *Hard or Soft Cab with 4-Post ROPS Required.*	315.66
	TCB11274	Comfort Adjust Suspension Seat with Armrests *Requires TCB11275 Seat Bracket Kit.*	783.24
	TCB11273	Deluxe Suspension Seat with Armrests	963.00
	TCB10608	Electronic Cruise Control Kit	284.61
	TCB10620	Front Windshield *Can be Used without Cab for Wind Protection. Mounts to 4-Post ROPS.*	492.20
	TCB11095	Front Worklight (2) Kit *Requires 4-Post ROPS Conversion Kit with Canopy.*	178.69
	TCA12055	Orifice Kit *Slows Mower Deck Rate of Drop.*	See Parts
	TCB10305	Rear Hitch	110.21
	TCB11275	Seat Bracket Kit *For Comfort Adjust Suspension Seat (TCB11274).*	260.01
	TCB10981	Single Speed Front Windshield Wiper	371.29
	TCA12058	Slow Moving Vehicle (SMV) Kit	See Parts
	TY15956	Tire Chains (Pair) for 23x10.50-12 In. Drive Tires	See Parts
	TY15841	Tire Chains (Pair) for 23x8.50-12 In. Drive Tires	See Parts
	TCA13791	Vehicle Enclosure Kit	See Parts
		Weights:	
	BM17985	Mounting Hardware (1) for Attaching One Wheel Weight *Attaches (1) 50 lb. Weight to GTs, GXs, X500 M-Ts and F1400s.*	11.77
	R66949	Quik-Tatch Weight, 42 Lb.	62.06
	TCB10303	Rear Weight Mounting Kit *Recommended for Ballast when Using Certain Implements. See Sales Manual for Instructions.*	103.79
		Wheels and Tires Front:	
	TCB10013	Dual Wheel Conversion Kit For 23x8.50-12 In. Drive Tires	282.49
	TCB10502	Two Wheels with 23x10.50-12 In. 4PR Turf Drive Tires	380.91
	TCB10413	Two Wheels with 23x8.50-12 In. 4PR Turf Drive Tires	352.03

SERVICE CONTRACTS - RESIDENTIAL OWNERS/USE

Visit http://www.JohnDeere.com/ServicePlans for more information on John

1435 Series II Commercial Front Mower (Less Mower Deck)

Continued

CODE	ATTACHMENT IDENTIFIER	DESCRIPTION	SUGGESTED LIST PRICE USD ($)
		SERVICE CONTRACTS - RESIDENTIAL OWNERS/USE Continued... *Deere Service Contracts. May not be Available in Parts of the U.S., Not Available in Canada. Price may vary due to driving distance and/or time from machine to dealership location.*	
		John Deere Extended Service Plan - 3-Year Option *3-year extended service plan. (1 year of extended service protection); 3-years of warranty transportation.*	469.99
		John Deere Extended Service Plan - 4-Year Option *4-year extended service plan. (2 years of extended service protection); 4-years of warranty transportation.*	869.99

1445 Series II Commercial Front Mower (Less Mower Deck)

Equipment for Base Machine

30.9 Gross (29.5 Net) HP Yanmar Three Cylinder Liquid-Cooled Diesel Engine (81.2 Cu. In.)
Dual Element Air Cleaner
Air Restrictor Indicator
12V Electric Start
12V Outlet
55 AMP Automotive Alternator
16 U.S. Gallon Fuel Capacity
Two Pedal Hydrostatic Foot Control
Hydrostatic Transmission
Hydrostatic Front Wheel Drive
Hydrostatic Power Steering
Differential Front Wheel Lock
Locking Engine Compartment
Front Light
23x10.50-12 In. 4PR Turf Drive Tires
18x8.50-8 In. 4PR Turf Steering Tires (2WD)
18x8.50-10 In. 4PR Turf Steering Tires (4WD)
Transmission Oil Cooler
Individual Turn Assist Brakes
Wet Disk Brakes
Master Stop Brake
Dual Hydraulic Implement Lift Cylinders
Less Mower Deck
Hourmeter
Fuel Gauge
Tilt Steering Wheel
Storage Bin
Live Independent PTO
PTO Shaft Drive
Operator Presence System
Low Oil Pressure Warning Light
Deluxe Suspension Seat with Armrests
Folding Two Post ROPS (Roll-Over Protective Structure) and Retractable Seat Belt
Cast Iron Rear Bumper
Operator Training Video
Hydraulic Oil Temp Light-Buzzer-PTO Kill

CODE	ATTACHMENT IDENTIFIER	DESCRIPTION	SUGGESTED LIST PRICE USD ($)

Select One Code From Each Required Category

BASE MACHINE

F.O.B. Raleigh, North Carolina

0085TC	1445 Series II Commercial Front Mower (Less Mower Deck)	20,965.00

DRIVE SYSTEM

1000	Two Wheel Drive	In Base Price
1001	Four Wheel Drive (Full Time or On Demand)	2,913.00

DRIVE WHEELS WITH TIRES (TWO)

2000	23x10.50-12 4PR Turf Drive Tires	In Base Price
2001	23x8.50-12 4PR Turf Drive Tires	-35.00
2010	Less Drive Wheels and Tires	-332.00

SEATS

3000	Deluxe Suspension Seat with Armrests	In Base Price
3001	Comfort Adjust Suspension Seat with Armrests	66.00
3002	Air Ride Suspension Seat with Armrests	469.00

ATTACHMENTS - ORDER AS DESIRED

1445 Series II Commercial Front Mower (Less Mower Deck)

Continued

CODE	ATTACHMENT IDENTIFIER	DESCRIPTION	SUGGESTED LIST PRICE USD ($)
		ATTACHMENTS - ORDER AS DESIRED Continued...	
		European CE Kit:	
9100		European CE Conversion Kit, 1400 Series II and 1500 Series II Tractor Unit *This Code Must be Ordered to Receive a 1400 Series II or 1500 Series II Commercial Front Mower Which Meets CE Mark Requirements. Kit will Include Seat Lockdown Latch, Pictorial Decals and Operator's Manual in English, French, German, Spanish and Italian.*	28.00
		ATTACHMENTS FOR FIELD CONVERSION	
		Engine:	
	TCA19917	B20 Biodiesel Conversion Kit *This kit converts one machine to use B20 Diesel fuel.*	See Parts
	AR87167	Engine Coolant Heater (110 Volt)	See Parts
		European CE Kit:	
	TCB10691	European CE Lift Arm Extension Kit *This Bundle Must be Ordered with a 72 In. Side Discharge Mower Deck if Front Mowers are Equipped with TCB10690 European CE Road Homologation Kit.*	372.36
	TCB10690	European CE Road Homologation Kit *Kit Includes Front Hitch Assembly with Attaching Hardware, Front and Rear Turn Signals, Flashers, Horn, 7 Pin Connector Kit, License Plate Bracket with Lights, (2) ROPS Mounted Working Lights, Hazard Switch, Wiring Harness and Turn Brake Pedals with Locking Latch. Homologation Kit Requires TCB10941, 4-Post ROPS Conversion Kit with Canopy and TCB11198 4-Post ROPS Upgrade Kit.*	2,310.13
		Hydraulics:	
	TCB11475	Double Spool Auxiliary Hydraulic Kit	714.76
	TCB10566	Hydraulic Weight Transfer Kit	299.60
	TCB11474	Single Spool Auxiliary Hydraulic Kit	510.39
		Miscellaneous:	
	TCB10325	(1) Exterior Mirror Kit *Mounts to 4-Post ROPS.*	160.50
	BTC10293	4-Post ROPS Conversion Kit with Canopy *Converts Standard 2-Post ROPS to 4-Post with Canopy.* **Required for new Hard Cab BTC10295.* **Required for new Soft Cab BTC10336.* *(Not compatible with Old Hard Cab BTC10024 and Old Soft Cab BTC10023).* ***Discontinued - 4 Post ROPS Kit TCB10941 only compatible with Old Hard Cab BTC10024 and Old Soft Cab BTC10023.*	1,667.06
	TCB11198	4-Post ROPS Upgrade Kit *Kit Contains Wiring Harness, Acoustic Headliner, Work Lights and Hardware. Requires TCB10941 4-Post ROPS Conversion Kit with Canopy. Kit is not Required if Ordering a Soft or Hard Cab.*	850.66

1445 Series II Commercial Front Mower (Less Mower Deck)
Continued

CODE	ATTACHMENT IDENTIFIER	DESCRIPTION	SUGGESTED LIST PRICE USD ($)
		ATTACHMENTS FOR FIELD CONVERSION Continued...	
	TCB11372	Air Ride Suspension Seat with Armrests	1,501.21
	TCB10538	Breakaway Beacon Light *Hard or Soft Cab with 4-Post ROPS Required.*	315.66
	TCB11274	Comfort Adjust Suspension Seat with Armrests *Requires TCB11275 Seat Bracket Kit.*	783.24
	TCB11273	Deluxe Suspension Seat with Armrests	963.00
	TCB10608	Electronic Cruise Control Kit	284.61
	TCB10620	Front Windshield *Can be Used without Cab for Wind Protection. Mounts to 4-Post ROPS.*	492.20
	TCB11095	Front Worklight (2) Kit *Requires 4-Post ROPS Conversion Kit with Canopy.*	178.69
	TCA12055	Orifice Kit *Slows Mower Deck Rate of Drop.*	See Parts
	TCB10305	Rear Hitch	110.21
	TCB11275	Seat Bracket Kit *For Comfort Adjust Suspension Seat (TCB11274).*	260.01
	TCB10981	Single Speed Front Windshield Wiper	371.29
	TCA12058	Slow Moving Vehicle (SMV) Kit	See Parts
	TY15956	Tire Chains (Pair) for 23x10.50-12 In. Drive Tires	See Parts
	TY15841	Tire Chains (Pair) for 23x8.50-12 In. Drive Tires	See Parts
	TCA13791	Vehicle Enclosure Kit	See Parts
		Weights:	
	BM17985	Mounting Hardware (1) for Attaching One Wheel Weight *Attaches (1) 50 lb. Weight to GTs, GXs, X500 M-Ts and F1400s.*	11.77
	R66949	Quik-Tatch Weight, 42 Lb.	62.06
	TCB10303	Rear Weight Mounting Kit *Recommended for Ballast when Using Certain Implements. See Sales Manual for Instructions.*	103.79
		Wheels and Tires Front:	
	TCB10013	Dual Wheel Conversion Kit For 23x8.50-12 In. Drive Tires	282.49
	TCB10502	Two Wheels with 23x10.50-12 In. 4PR Turf Drive Tires	380.91
	TCB10413	Two Wheels with 23x8.50-12 In. 4PR Turf Drive Tires	352.03

SERVICE CONTRACTS - RESIDENTIAL OWNERS/USE

Visit http://www.JohnDeere.com/ServicePlans for more information on John

1445 Series II Commercial Front Mower (Less Mower Deck)

Continued

CODE	ATTACHMENT IDENTIFIER	DESCRIPTION	SUGGESTED LIST PRICE USD ($)
		SERVICE CONTRACTS - RESIDENTIAL OWNERS/USE Continued... *Deere Service Contracts. May not be Available in Parts of the U.S., Not Available in Canada. Price may vary due to driving distance and/or time from machine to dealership location.*	
		John Deere Extended Service Plan - 3-Year Option *3-year extended service plan. (1 year of extended service protection); 3-years of warranty transportation.*	469.99
		John Deere Extended Service Plan - 4-Year Option *4-year extended service plan. (2 years of extended service protection); 4-years of warranty transportation.*	869.99

1545 Series II Commercial Front Mower (Less Mower Deck)

Equipment for Base Machine

30.9 Gross (29.5 Net) HP Yanmar Three Cylinder Liquid-Cooled Diesel Engine (81.2 Cu.In.)
Dual Element Air Cleaner
Air Restrictor Indicator
12V Electric Start
12V Outlet
55 AMP Automotive Alternator
16 U.S. Gallon Fuel Capacity
Two Pedal Hydrostatic Foot Control
Hydrostatic Transmission
Two-Speed Transaxle
Hydrostatic Four Wheel Drive
Full Time 4WD / On-Demand 4WD, Full-Time 2WD
Hydrostatic Power Steering
Differential Front Wheel Lock
Locking Engine Compartment
Front Light
26x12.00-12 In. Square Shoulder 6PR Turf Drive Tires
20x10.00-10 In. 6PR Round Shoulder Steering Tires
Transmission Oil Cooler
Individual Turn Assist Brakes
Wet Disk Brakes
Master Stop Brake
Dual Hydraulic Implement Lift Cylinders
Less Mower Deck
Hourmeter
Fuel Gauge
Tilt Steering Wheel
Storage Bin
Live Independent PTO
PTO Shaft Drive
Operator Presence System
Low Oil Pressure Warning Light
Deluxe Suspension Seat with Armrests
Folding Two Post ROPS (Roll-Over Protective Structure) and Retractable Seat Belt
Cast Iron Rear Bumper
Operator Training Video
Hydraulic Oil Temp Light-Buzzer-PTO Kill

CODE	ATTACHMENT IDENTIFIER	DESCRIPTION	SUGGESTED LIST PRICE USD ($)

Select One Code From Each Required Category

BASE MACHINE

F.O.B. Raleigh, North Carolina

0444TC		1545 Series II Commercial Front Mower (Less Mower Deck)	25,627.00

SEATS

3000		Deluxe Suspension Seat with Armrests	In Base Price
3001		Comfort Adjust Suspension Seat with Armrests	66.00
3002		Air Ride Suspension Seat with Armrests	468.00

ATTACHMENTS - ORDER AS DESIRED

European CE Kit:

9100		European CE Conversion Kit, 1400 Series II and 1500 Series II Traction Unit *This Code Must be Ordered to Receive a 1400 Series II or 1500 Series II Commercial Front Mower Which Meets CE Requirements. Kit will Include Seat Lockdown Latch, Pictorial Decals and Operator's Manuals in English, French, German, Spanish and Italian.*	28.00

ATTACHMENTS FOR FIELD CONVERSION

Engine:

	TCA19917	B20 Biodiesel Conversion Kit *This kit converts one machine to use B20 Diesel fuel.*	See Parts
	AR87167	Engine Coolant Heater (110 Volt)	See Parts

1545 Series II Commercial Front Mower (Less Mower Deck)
Continued

CODE	ATTACHMENT IDENTIFIER	DESCRIPTION	SUGGESTED LIST PRICE USD ($)
		ATTACHMENTS FOR FIELD CONVERSION Continued...	
		European CE Kit:	
	TCB10691	European CE Lift Arm Extension Kit *This Bundle Must be Ordered with a 72 In. Side Discharge Mower Deck if Front Mowers are Equipped with TCB10690 European CE Road Homologation Kit.*	372.36
	TCB10690	European CE Road Homologation Kit *Kit Includes Front Hitch Assembly with Attaching Hardware, Front and Rear Turn Signals, Flashers, Horn, 7 Pin Connector Kit, License Plate Bracket with Lights, (2) ROPS Mounted Working Lights, Hazard Switch, Wiring Harness and Turn Brake Pedals with Locking Latch. Homologation Kit Requires TCB10941, 4-Post ROPS Conversion Kit with Canopy and TCB11198 4-Post ROPS Upgrade Kit.*	2,310.13
		Hydraulics:	
	TCB11475	Double Spool Auxiliary Hydraulic Kit	714.76
	TCB10566	Hydraulic Weight Transfer Kit	299.60
	TCB11474	Single Spool Auxiliary Hydraulic Kit	510.39
		Miscellaneous:	
	TCB10325	(1) Exterior Mirror Kit *Mounts to 4-Post ROPS.*	160.50
	BTC10293	4-Post ROPS Conversion Kit with Canopy *Converts Standard 2-Post ROPS to 4-Post with Canopy.* **Required for new Hard Cab BTC10295.* **Required for new Soft Cab BTC10336.* *(Not compatible with Old Hard Cab BTC10024 and Old Soft Cab BTC10023).* ***Discontinued - 4 Post ROPS Kit TCB10941 only compatible with Old Hard Cab BTC10024 and Old Soft Cab BTC10023.*	1,667.06
	TCB11198	4-Post ROPS Upgrade Kit *Kit Contains Wiring Harness, Acoustic Headliner, Work Lights and Hardware. Requires TCB10941 4-Post ROPS Conversion Kit with Canopy. Kit is not Required if Ordering a Soft or Hard Cab.*	850.66
	TCB11372	Air Ride Suspension Seat with Armrests	1,501.21
	TCB10538	Breakaway Beacon Light *Hard or Soft Cab with 4-Post ROPS Required.*	315.66
	TCB11274	Comfort Adjust Suspension Seat with Armrests *Requires TCB11275 Seat Bracket Kit.*	783.24
	TCB11273	Deluxe Suspension Seat with Armrests	963.00
	TCB10608	Electronic Cruise Control Kit	284.61
	TCB10620	Front Windshield *Can be Used without Cab for Wind Protection. Mounts to 4-Post ROPS.*	492.20

1545 Series II Commercial Front Mower (Less Mower Deck)
Continued

CODE	ATTACHMENT IDENTIFIER	DESCRIPTION	SUGGESTED LIST PRICE USD ($)
		ATTACHMENTS FOR FIELD CONVERSION Continued...	
	TCB11095	Front Worklight (2) Kit *Requires 4-Post ROPS Conversion Kit with Canopy.*	178.69
	TCA12055	Orifice Kit *Slows Mower Deck Rate of Drop.*	See Parts
	TCB10305	Rear Hitch	110.21
	TCB11275	Seat Bracket Kit *For Comfort Adjust Suspension Seat (TCB11274).*	260.01
	TCB10981	Single Speed Front Windshield Wiper	371.29
	TCA12058	Slow Moving Vehicle (SMV) Kit	See Parts
	TCA13791	Vehicle Enclosure Kit	See Parts
		Seats / Wheels / Tires:	
	TY15958	Tire Chains (Pair) for 26x12-12 Tires	See Parts
		Weights:	
	R66949	Quik-Tatch Weight, 42 Lb.	62.06
	TCB10303	Rear Weight Mounting Kit *Recommended for Ballast when Using Certain Implements. See Sales Manual for Instructions.*	103.79
		Wheels and Tires Front:	
	TCB10556	Two Wheels with 26x12-12 In., 6PR Turf Drive Tires	532.86
		SERVICE CONTRACTS - RESIDENTIAL OWNERS/USE	
		Visit http://www.JohnDeere.com/ServicePlans for more information on John Deere Service Contracts. May not be Available in Parts of the U.S., Not Available in Canada. Price may vary due to driving distance and/or time from machine to dealership location.	
		John Deere Extended Service Plan - 3-Year Option *3-year extended service plan. (1 year of extended service protection); 3-years of warranty transportation.*	469.99
		John Deere Extended Service Plan - 4-Year Option *4-year extended service plan. (2 years of extended service protection); 4-years of warranty transportation.*	869.99

1565 Series II Commercial Front Mower (Less Mower Deck)

Equipment for Base Machine

37.8 Gross (35.9 Net) HP Yanmar Three Cylinder Liquid-Cooled Diesel Engine (100.2 Cu.In.)
Dual Element Air Cleaner
Air Restrictor Indicator
12V Electric Start
12V Outlet
55 AMP Automotive Alternator
16 U.S. Gallon Fuel Capacity
Two Pedal Hydrostatic Foot Control
Hydrostatic Transmission
Two-Speed Transaxle
Hydrostatic Four Wheel Drive
Full Time 4WD / On-Demand 4WD, Full-Time 2WD
Hydrostatic Power Steering
Differential Front Wheel Lock
Locking Engine Compartment
Front Light
26x12.00-12 In. Square Shoulder 6PR Turf Drive Tires
20x10.00-10 In. 6PR Round Shoulder Steering Tires
Transmission Oil Cooler
Individual Turn Assist Brakes
Wet Disk Brakes
Master Stop Brake
Dual Hydraulic Implement Lift Cylinders
Less Mower Deck
Hourmeter
Fuel Gauge
Tilt Steering Wheel
Storage Bin
Live Independent PTO
PTO Shaft Drive
Operator Presence System
Low Oil Pressure Warning Light
Deluxe Suspension Seat with Armrests
Folding Two Post ROPS (Roll-Over Protective Structure) and Retractable Seat Belt
Cast Iron Rear Bumper
Operator Training Video
Hydraulic Oil Temp. Light-Buzzer-PTO Kill

CODE	ATTACHMENT IDENTIFIER	DESCRIPTION	SUGGESTED LIST PRICE USD ($)

Select One Code From Each Required Category

BASE MACHINE

F.O.B. Raleigh, North Carolina

0174TC		1565 Series II Commercial Front Mower (Less Mower Deck)	27,768.00

SEATS

3000		Deluxe Suspension Seat with Armrests	In Base Price
3001		Comfort Adjust Suspension Seat with Armrests	66.00
3002		Air Ride Suspension Seat with Armrests	468.00

ATTACHMENTS - ORDER AS DESIRED

European CE Kit:

9100		European CE Conversion Kit, 1400 Series II and 1500 Series II Traction Unit *This Code Must be Ordered to Receive a 1400 Series II or 1500 Series II Commercial Front Mower Which Meets CE Requirements. Kit will Include Seat Lockdown Latch, Pictorial Decals and Operator's Manuals in English, French, German, Spanish and Italian.*	28.00

ATTACHMENTS FOR FIELD CONVERSION

Engine:

	TCA19917	B20 Biodiesel Conversion Kit *This kit converts one machine to use B20 Diesel fuel.*	See Parts
	AR87167	Engine Coolant Heater (110 Volt)	See Parts

1565 Series II Commercial Front Mower (Less Mower Deck)
Continued

CODE	ATTACHMENT IDENTIFIER	DESCRIPTION	SUGGESTED LIST PRICE USD ($)
		ATTACHMENTS FOR FIELD CONVERSION Continued...	
		European CE Kit:	
	TCB10691	European CE Lift Arm Extension Kit *This Bundle Must be Ordered with a 72 In. Side Discharge Mower Deck if Front Mowers are Equipped with TCB10690 European CE Road Homologation Kit.*	372.36
	TCB10690	European CE Road Homologation Kit *Kit Includes Front Hitch Assembly with Attaching Hardware, Front and Rear Turn Signals, Flashers, Horn, 7 Pin Connector Kit, License Plate Bracket with Lights, (2) ROPS Mounted Working Lights, Hazard Switch, Wiring Harness and Turn Brake Pedals with Locking Latch. Homologation Kit Requires TCB10941, 4-Post ROPS Conversion Kit with Canopy and TCB11198 4-Post ROPS Upgrade Kit.*	2,310.13
		Hydraulics:	
	TCB11475	Double Spool Auxiliary Hydraulic Kit	714.76
	TCB10566	Hydraulic Weight Transfer Kit	299.60
	TCB11474	Single Spool Auxiliary Hydraulic Kit	510.39
		Miscellaneous:	
	TCB10325	(1) Exterior Mirror Kit *Mounts to 4-Post ROPS.*	160.50
	BTC10293	4-Post ROPS Conversion Kit with Canopy *Converts Standard 2-Post ROPS to 4-Post with Canopy.* **Required for new Hard Cab BTC10295.* **Required for new Soft Cab BTC10336.* *(Not compatible with Old Hard Cab BTC10024 and Old Soft Cab BTC10023).* ***Discontinued - 4 Post ROPS Kit TCB10941 only compatible with Old Hard Cab BTC10024 and Old Soft Cab BTC10023.*	1,667.06
	TCB11198	4-Post ROPS Upgrade Kit *Kit Contains Wiring Harness, Acoustic Headliner, Work Lights and Hardware. Requires TCB10941 4-Post ROPS Conversion Kit with Canopy. Kit is not Required if Ordering a Soft or Hard Cab.*	850.66
	TCB11372	Air Ride Suspension Seat with Armrests	1,501.21
	TCB10538	Breakaway Beacon Light *Hard or Soft Cab with 4-Post ROPS Required.*	315.66
	TCB11274	Comfort Adjust Suspension Seat with Armrests *Requires TCB11275 Seat Bracket Kit.*	783.24
	TCB11273	Deluxe Suspension Seat with Armrests	963.00
	TCB10608	Electronic Cruise Control Kit	284.61
	TCB10620	Front Windshield *Can be Used without Cab for Wind Protection. Mounts to 4-Post ROPS.*	492.20

1565 Series II Commercial Front Mower (Less Mower Deck)

Continued

CODE	ATTACHMENT IDENTIFIER	DESCRIPTION	SUGGESTED LIST PRICE USD ($)
		ATTACHMENTS FOR FIELD CONVERSION Continued...	
	TCB11095	Front Worklight (2) Kit *Requires 4-Post ROPS Conversion Kit with Canopy.*	178.69
	TCA12055	Orifice Kit *Slows Mower Deck Rate of Drop.*	See Parts
	TCB10305	Rear Hitch	110.21
	TCB11275	Seat Bracket Kit *For Comfort Adjust Suspension Seat (TCB11274).*	260.01
	TCB10981	Single Speed Front Windshield Wiper	371.29
	TCA12058	Slow Moving Vehicle (SMV) Kit	See Parts
	TCA13791	Vehicle Enclosure Kit	See Parts
		Seats / Wheels / Tires:	
	TY15958	Tire Chains (Pair) for 26x12-12 Tires	See Parts
		Weights:	
	R66949	Quik-Tatch Weight, 42 Lb.	62.06
	TCB10303	Rear Weight Mounting Kit *Recommended for Ballast when Using Certain Implements. See Sales Manual for Instructions.*	103.79
		Wheels and Tires Front:	
	TCB10556	Two Wheels with 26x12-12 In., 6PR Turf Drive Tires	532.86
		SERVICE CONTRACTS - RESIDENTIAL OWNERS/USE	
		Visit http://www.JohnDeere.com/ServicePlans for more information on John Deere Service Contracts. May not be Available in Parts of the U.S., Not Available in Canada. Price may vary due to driving distance and/or time from machine to dealership location.	
		John Deere Extended Service Plan - 3-Year Option *3-year extended service plan. (1 year of extended service protection); 3-years of warranty transportation.*	469.99
		John Deere Extended Service Plan - 4-Year Option *4-year extended service plan. (2 years of extended service protection); 4-years of warranty transportation.*	869.99

48 In. 11-Gauge Steel Commercial Side Discharge Mower Deck (For F725 and F735 Front Mowers)

Equipment for Base Machine

48 In. Cutting Width
(3) HD Spindles, Blades
Fabricated Deck
1-4 In. Height of Cut
Deep Deck Design
(2) Front Pneumatic Caster Wheels
Quick Release Belt Shields
(1) Rear Left Adjustable Gauge Wheel
Front and Rear Anti-Scalp
Rollers
Offset Spindles
Hinged Side Discharge Chute
Greaseable Spindles
11-Gauge (.120 In.) Steel
Splined Shaft Drive
Baffling System
70 Degrees Rotate for Service
Single Point Height of Cut Adjustment
Less Lift Arms

CODE	ATTACHMENT IDENTIFIER	DESCRIPTION	SUGGESTED LIST PRICE USD ($)
		Select One Code From Each Required Category	
		BASE MACHINE	
		F.O.B. Davenport, Iowa	
9019TC		48 In. 11-Gauge Steel Commercial Side Discharge Mower Deck (For F725 and F735 Front Mowers)	2,160.00
		LIFT ARMS FOR F735	
1000		Lift Arms For 48 In. and 54 In. Side Discharge Mower Deck *For F735 Mower Only. Lift Arms are Standard on F725 Mower.*	368.00
1010		Less Lift Arms	In Base Price
		ATTACHMENTS FOR FIELD CONVERSION	
		Mower Deck and Mower Deck Attachments:	
	BM17870	48 In. Front Edge Kit	86.67
	BM19918	48 In. Mulch Kit	232.19
	BM19384	48 In. and 54 In. Mower Lift Arms *For F735 Mower Only. Lift Arms are Standard on F725 Mower.*	See Parts
	M135589	Hi Lift Blade For 48 In. Mower	See Parts
	AM115361	Leaf Mulcher Kit	See Parts
	M115495	Medium Lift Blade for 48 In. Deck	See Parts
	M113517	Mulching Blade For 48 In. Mower	See Parts

54 In. 11-Gauge Steel Commercial Side Discharge Mower Deck (For F725 and F735 Front Mowers)

Equipment for Base Machine

54 In. Cutting Width
(3) HD Spindles, Blades
Fabricated Deck
1-4 In. Height of Cut
Deep Deck Design
(2) Front Pneumatic Caster Wheels
Quick Release Belt Shields
(1) Rear Left Adjustable Gauge Wheel
Front and Rear Anti-Scalp
Rollers
Offset Spindles
Hinged Side Discharge Chute
Greaseable Spindles
11-Gauge (.120 In.) Steel
Splined Shaft Drive
Baffling System
70 Degrees Rotate For Service
Single Point Height or Cut Adjustment
Less Lift Arms

CODE	ATTACHMENT IDENTIFIER	DESCRIPTION	SUGGESTED LIST PRICE USD ($)
		Select One Code From Each Required Category	
		BASE MACHINE	
		F.O.B. Davenport, Iowa	
9020TC		54 In. 11-Gauge Steel Commercial Side Discharge Mower Deck (For F725 and F735 Front Mowers)	2,300.00
		LIFT ARMS FOR F735	
1000		Lift Arms For 48 In. and 54 In. Side Discharge Mower Deck *For F735 Mower Only. Lift Arms are Standard on F725 Mower.*	368.00
1010		Less Lift Arms	In Base Price
		ATTACHMENTS FOR FIELD CONVERSION	
		Mower Deck and Mower Deck Attachments:	
	BM19384	48 In. and 54 In. Mower Lift Arms *For F735 Mower Only. Lift Arms are Standard on F725 Mower.*	See Parts
	BM17871	54 In. Front Edge Kit	84.53
	BM17869	54 In. Tricycler Mulching Kit	245.03
	M115496	Cut Performance Blade for 54 In. Mower	See Parts
	M135590	Hi Lift Blade for 54 In. Mower	See Parts
	AM115361	Leaf Mulcher Kit	See Parts
	M113518	Mulching Blade for 54 In. Mower	See Parts
	AM115596	Rear Lip Kit (1992 and prior) for 54 In. Mower	See Parts

60 In. 7-Iron Commercial Side Discharge Mower Deck With Lift Arms (For 735 Front Mowers)

Equipment for Base Machine

60 In. Cutting Width
(3) HD Spindles, Blades
One Piece Stamped Deck
1-6 In. Height of Cut
Deep Deck Design
(2) Front Pneumatic Caster Wheels
Quick Release Belt Shields
(1) Rear Left Adjustable Gauge Wheel
Front and Rear Anti-Scalp
Rollers
3/4 In. Steel Reinforcement Bar
Offset Spindles
Hinged Side Discharge Chute
Greaseable Spindles
7-Gauge (.177 In.) Steel
Splined Shaft Drive
Baffling System
70 Degrees Rotate for Service
Four Point Height of Cut Adjustment
Lift Arms

CODE	ATTACHMENT IDENTIFIER	DESCRIPTION	SUGGESTED LIST PRICE USD ($)

Select One Code From Each Required Category

BASE MACHINE

F.O.B. Davenport, Iowa

9022TC		60 In. 7-Iron Commercial Side Discharge Mower Deck With Lift Arms (For 735 Front Mowers)	3,400.00

ATTACHMENTS FOR FIELD CONVERSION

Mower Deck and Mower Deck Attachments:

	BM20495	Gauge Wheel (Front Left and Right) Kit *For 7-Iron Commercial Mower Decks.*	149.80
	AM115361	Leaf Mulcher Kit *For 48 In. and 54 In. Mowers.*	See Parts
	TCB10953	Mulch Kit (60 In. 7-Iron, 7-Iron II and 7-Iron PRO)	319.93

60 In. 7-Iron II Commercial Side Discharge Mower Deck (For 1400 Series II and Non-Series II Front Mowers)

Equipment for Base Machine

60 In. Cutting Width
(3) HD Spindles, Blades
One Piece Stamped Deck
1-6 In. Height of Cut
Deep Deck Design
(2) Front Pneumatic Caster Wheels
Quick Release Belt Shields
(1) Rear Left Adjustable Gauge Wheel
Front and Rear Anti-Scalp Rollers
3/4 In. Steel Reinforcement Bar
Offset Spindles
Hinged Side Discharge Chute
Greaseable Spindles
7-Gauge (.177 In.) Steel
Splined Shaft Drive
Baffling System
90 Degrees Rotate for Service

CODE	ATTACHMENT IDENTIFIER	DESCRIPTION	SUGGESTED LIST PRICE USD ($)
		Select One Code From Each Required Category	
		BASE MACHINE	
		F.O.B. Raleigh, North Carolina	
0331TC		60 In. 7-Iron II Commercial Side Discharge Mower Deck (For 1400 Series II and Non-Series II Front Mowers) *Will not Retrofit F900, F1145 Series Front Mowers.*	4,070.00
		ATTACHMENTS - ORDER AS DESIRED	
		ATTACHMENTS FOR FIELD CONVERSION	
		Miscellaneous:	
	TCA13791	Vehicle Enclosure Kit	See Parts
		Mower Deck and Mower Deck Attachments:	
	TCB10953	Mulch Kit (60 In. 7-Iron, 7-Iron II and 7-Iron PRO)	319.93

62 In. 7-Gauge Steel Commercial Rear Discharge Mower Deck (For 1400 Series II and Non-Series II Front Mowers)

Equipment for Base Machine

62 In. Cutting Width
(3) HD Spindles, Blades
Fabricated Deck
1-5 In. Height of Cut
Deep Deck Design
Vehicle Enclosure Kit
(2) Front Pneumatic
Caster Wheels
Quick Release Belt Shields
(2) Rear Anti-Scalp Wheels
Front Anti-Scalp Rollers
3/4 In. Steel Reinforcement
Bar
Offset Spindles
Rear Discharge Chute
Greaseable Spindles
7-Gauge (.177 In.) Steel
Splined Shaft Drive
Baffling System
70 Degrees Rotate for Service

CODE	ATTACHMENT IDENTIFIER	DESCRIPTION	SUGGESTED LIST PRICE USD ($)
		Select One Code From Each Required Category	
		BASE MACHINE	
		F.O.B. Raleigh, North Carolina	
0351TC		62 In. 7-Gauge Steel Commercial Rear Discharge Mower Deck (For 1400 Series II and Non-Series II Front Mowers) *Will not Retrofit F900, F1145 Series Front Mowers. Not Compatible with Dual Wheels.*	4,230.00
		ATTACHMENTS - ORDER AS DESIRED	
		European CE Kit:	
9100		European CE Conversion Kit, 62 In. 7-Gauge Steel Commercial Rear Discharge Mower Deck *This Code Must be Ordered to Receive a 62 In. Mower Deck Which Meets CE Mark Requirements. Kit Includes Low Lift Cutting Blades, Upstop Brackets, Pictorial Decals, English, French, German, Spanish and Italian Operator's Manual.*	72.00
		ATTACHMENTS FOR FIELD CONVERSION	
		Mower Deck and Mower Deck Attachments:	
	TCB10553	62 In. Rear Discharge Mulching Kit	220.41
	TCB10523	62 In. Rear-Discharge Mower Deck Deflector Kit	217.21

72 In. 7-Iron II Commercial Side Discharge Mower Deck (For 1400/1500 Series II and Non-Series II Front Mowers)

Equipment for Base Machine

72 In. Cutting Width
(3) HD Spindles, Blades
One Piece Stamped Deck
1-6 In. Height of Cut
Deep Deck Design
(2) Front Pneumatic Caster Wheels
Quick Release Belt Shields
(2) Rear Adjustable Gauge Wheels
Front and Rear Anti-Scalp Rollers
3/4 In. Steel Reinforcement Bar
Offset Spindles
Hinged Side Discharge Chute
Greaseable Spindles
7-Gauge (.177 In.) Steel
Splined Shaft Drive
Baffling System
90 Degrees Rotate for Service

CODE	ATTACHMENT IDENTIFIER	DESCRIPTION	SUGGESTED LIST PRICE USD ($)
		Select One Code From Each Required Category	
		BASE MACHINE	
		F.O.B. Raleigh, North Carolina	
0341TC		72 In. 7-Iron II Commercial Side Discharge Mower Deck (For 1400/1500 Series II and Non-Series II Front Mowers) *Will not Retrofit F900, F1145 Series Front Mowers. Ballast Recommendations: (1) 42 Lb. (R66949) Quik-Tatch Weight Mounted on Rear Weight Mounting Kit (TCB10303).*	4,787.00
		ATTACHMENTS FOR FIELD CONVERSION	
		European CE Kit:	
	TCB10691	European CE Lift Arm Extension Kit *This Bundle Must be Ordered with a 72 In. Side Discharge Mower Deck if Front Mowers are Equipped with TCB10690 European CE Road Homologation Kit.*	372.36
		Miscellaneous:	
	TCA13791	Vehicle Enclosure Kit	See Parts
		Mower Deck and Mower Deck Attachments:	
	TCB10584	72 In. Side Discharge Anti-Scalp Wheel (Rear Right) Kit *For 7-Iron (Non 7-Iron II) Decks Only.*	92.01
	TCB10951	Mulch Kit (72 In. 7-Iron, 7-Iron II and 7-Iron PRO)	331.70
		Weights:	
	R66949	Quik-Tatch Weight, 42 Lb.	62.06
	TCB10303	Rear Weight Mounting Kit *Recommended for Ballast when Using Certain Implements. See Sales Manual for Instructions.*	103.79

72 In. Fastback 7-Gauge Steel Commercial Rear Discharge Mower Deck (For 1400/1500 Series II and Non-Series II Front Mowers)

Equipment for Base Machine

72 In. Cutting Width
(3) HD Spindles, Blades
Fabricated Deck
1-6 In. Height of Cut
Deep Deck Design
Vehicle Enclosure Kit
(2) Front Pneumatic Caster Wheels
Quick Release Belt Shields
(2) Rear Anti-Scalp Wheels
Front Anti-Scalp Rollers
3/4 In. Steel Reinforcement Bar
Offset Spindles
Rear Discharge Chute
Greaseable Spindles
7-Gauge (.177 In.) Steel
Splined Shaft Drive
Baffling System
90 Degrees Rotate for Service

CODE	ATTACHMENT IDENTIFIER	DESCRIPTION	SUGGESTED LIST PRICE USD ($)
		Select One Code From Each Required Category	
		BASE MACHINE	
		F.O.B. Raleigh, North Carolina	
0551TC		72 In. Fastback 7-Gauge Steel Commercial Rear Discharge Mower Deck (For 1400/1500 Series II and Non-Series II Front Mowers) *Will not Retrofit F900, F1145 Series Front Mowers. Ballast Recommendations: (1) 42 Lb. (R66949) Quick-Tatch Weight Mounted on Rear Weight Mounting Kit(TCB10303).*	4,669.00
		ATTACHMENTS FOR FIELD CONVERSION	
		Mower Deck and Mower Deck Attachments:	
	DMA210906	72 In. Deflector Kit	See Parts
	DMB210223	72 In. Rear Discharge Anti-Scalp Wheel (Front Pair) Kit	176.56
	DMB210099	72 In. Rear Discharge Mulching Kit	415.16
		Weights:	
	R66949	Quik-Tatch Weight, 42 Lb. *For Use with TCB10303 Rear Weight Mounting Kit.*	62.06
	TCB10303	Rear Weight Mounting Kit *Recommended for Ballast when Using Certain Implements. See Sales Manual for Instructions.*	103.79

72 In. 7-Iron V-Flex Commercial Side Discharge Mower Deck (For 1445/1500 Series II and Non-Series II Front Mowers)

Equipment for Base Machine

72 In. Cutting Width
(3) HD Spindles, Blades
(3) One Piece Stamped Decks
1-4 In. Height of Cut with Rear Roller Kit
1-5 In. Height of Cut with Rear Wheel Kit
Deep Deck Design
(4) Front Pneumatic Caster Wheels
20 Degrees of Wing Deck Articulation
Rear Wheel Kit
Hinged Side Discharge Chute
Greasable Spindles
7 Gauge (.177 In.) Steel
Splined Shaft Drive
45 Degrees Rotate for Service

CODE	ATTACHMENT IDENTIFIER	DESCRIPTION	SUGGESTED LIST PRICE USD ($)
		Select One Code From Each Required Category	
		BASE MACHINE	
		F.O.B. Davenport, Iowa	
0050TC		72 In. 7-Iron V-Flex Commercial Side Discharge Mower Deck (For 1445/1500 Series II and Non-Series II Front Mowers) *Will not Retrofit F900, F1145 Series Front Mowers. Can not be Used with the MCS 600 Hydraulic High-Dump Material Collection System. (3) 42 Lb. (R66949) Quick-Tatch Weights Mounted on Rear Weight Mounting Kit (TCB10303) is Recommended for Ballast. (2) Lift Cylinders(TCA13394) are Required for use with 1445 Front Mowers with Serial Numbers prior to 030001. Hydraulic Weight Transfer Kit (TCB10566) is Required for use with, 72-In V-Flex Mower Deck.*	7,925.00
		Rear Rollers, Wheels	
1000		Rear Wheel Kit *Includes (3) Rear Solid Rubber Caster Wheels and (2) Anti-Scalp Wheels.*	In Base Price
1001		Rear Roller Kit *Includes (3) 26" Smooth Solid Rollers.*	1,132.00
		ATTACHMENTS - ORDER AS DESIRED	
		European CE Kit:	
9100		European CE Version 72 In. 7-Iron V-Flex Commercial Side Discharge Mower Deck for 1445 Front Mowers Only *Not for 1445 Series II Mowers. This Code Must be Ordered for 72 In. 7-Iron V-Flex Mower Deck on 1445 Mowers Which Meet CE Mark Requirements. Kit Includes Pictorial Decals, Low Noise European Blades, Steel Shielding for Belt Drive System, Drive Shaft Guard, Lowered Front Lip and Operator's Manual in English, French, German, Spanish and Italian.*	335.00
		ATTACHMENTS FOR FIELD CONVERSION	

72 In. 7-Iron V-Flex Commercial Side Discharge Mower Deck (For 1445/1500 Series II and Non-Series II Front Mowers)

Continued

CODE	ATTACHMENT IDENTIFIER	DESCRIPTION	SUGGESTED LIST PRICE USD ($)
		ATTACHMENTS FOR FIELD CONVERSION Continued...	
		European CE Kit:	
	TCB10771	European CE Hydraulic Wing Lift Kit *Meets CE Requirements. Requires Single Spool Auxiliary Hydraulic Kit (TCB11747).*	802.50
		Hydraulics:	
	TCB10566	Hydraulic Weight Transfer Kit	299.60
	TCB10653	Hydraulic Wing Lift Kit *Order TCB10771 For Region II Only. Requires Single Spool Auxiliary Hydraulic Kit (TCB11474).*	744.71
	TCB11474	Single Spool Auxiliary Hydraulic Kit	510.39
		Miscellaneous:	
	TCA13394	(1) Lift Cylinder	See Parts
		Mower Deck and Mower Deck Attachments:	
	TCB10581	Mulch Kit (72 In. V-Flex)	635.59
	TCB10614	Rear Roller Kit *Includes (3) 26" Smooth Solid Rollers.*	1,728.06
	TCB10578	Rear Wheel Kit *Includes (3) Rear Solid Rubber Caster Wheels and (2) Anti-Scalp Wheels.*	516.81
		Weights:	
	R66949	Quik-Tatch Weight, 42 Lb. *For Use with TCB10303 Rear Weight Mounting Kit.*	62.06
	TCB10303	Rear Weight Mounting Kit	103.79
		Wheels and Tires Front:	
	TCB10013	Dual Wheel Conversion Kit For 23x8.50-12 In. Drive Tires *Requires (2) Sets of 23x8.50-12 Tires and Wheels. Not Compatible with 62 In. Rear Discharge Mower, 1545 and 1565 Mowers.*	282.49
	TCB10413	Two Wheels with 23x8.50-12 In. 4PR Turf Drive Tires	352.03

60 In. Heavy-Duty Hydraulic Angling Front Blade (For 1400/1500 Series II and Non-Series II Front Mowers)

Equipment for Base Machine

60 In. Clearing Width "Straight"
52 In. Clearing Width "Fully Angled"
0 Degrees Straight, 15-30 Degrees Left or Right Blade Angle
Hydraulic Angling
Replaceable Cutting Edge

Heavy-Duty, 7-Gauge Steel Reinforced Angle Bar on Back of Blade
Spring Breakaway - Lockout Pin
(2) 8-Position, Adjustable Skid Shoes
Less Lift Arms

CODE	ATTACHMENT IDENTIFIER	DESCRIPTION	SUGGESTED LIST PRICE USD ($)
		Select One Code From Each Required Category	
		BASE MACHINE	
		F.O.B. Davenport, Iowa	
0390TC		60 In. Heavy-Duty Hydraulic Angling Front Blade (For 1400/1500 Series II and Non-Series II Front Mowers) *Single Spool Auxiliary Hydraulic Kit (TCB11474) is Required for Operation of Chute Rotation. Ballast Recommendations: (6) 42 Lb. Quick-Tatch Weights (R66949) Mounted on Rear Weight Mounting Kit (TCB10303).*	1,698.00
		LIFT ARMS	
1000		Lift Arms and Hardware	213.00
1010		Less Lift Arms	In Base Price
		ATTACHMENTS - ORDER AS DESIRED	
		European CE Kit:	
9100		European CE Conversion Kit for 60 In. H.D. Hydraulic Angling Front Blade *This Code Must be Ordered to Receive a 60 In. Front Blade Which Meets CE Reqirements. Kit Includes Fuel Hose Conduit, Pictorial Decals, Operator's Manual in English, French, German, Spanish and Italian.*	13.00
		ATTACHMENTS FOR FIELD CONVERSION	
		Hydraulics:	
	TCB11474	Single Spool Auxiliary Hydraulic Kit	510.39
		Miscellaneous:	
	TCB10449	Front Blade Lift Arms and Hardware Kit	243.96
	AM119321	Heavy Duty Skid Shoe (1)	See Parts
	M142885	Heavy Duty Skid Shoe (1)	See Parts
	TY15956	Tire Chains (Pair) for 23x10.50-12 In. Drive Tires	See Parts

60 In. Heavy-Duty Hydraulic Angling Front Blade (For 1400/1500 Series II and Non-Series II Front Mowers)

Continued

CODE	ATTACHMENT IDENTIFIER	DESCRIPTION	SUGGESTED LIST PRICE USD ($)
		ATTACHMENTS FOR FIELD CONVERSION Continued...	
	TY15841	Tire Chains (Pair) for 23x8.50-12 In. Drive Tires	See Parts
		Weights:	
	BM17972	50 Lb. Cast Iron Wheel Weight (1) *For 23x8.50-12 and 23x10.50-12 Drive Wheels.*	128.40
	BM17985	Mounting Hardware (1) for Attaching One Wheel Weight *Attaches (1) 50 lb. Weight to GTs, GXs, X500 M-Ts and F1400s.*	11.77
	R66949	Quik-Tatch Weight, 42 Lb.	62.06
	TCB10303	Rear Weight Mounting Kit *Recommended for Ballast when Using Certain Implements. See Sales Manual for Instructions.*	103.79

Hard Cab (For 1400/1500 Series II and Non-Series II Front Mowers)

Equipment for Base Machine

Modular Design
Side Panels with Doors
Rear Panel with Window
Two Work Lights with Wiring Harness

Accoustic Canopy Liner

CODE	ATTACHMENT IDENTIFIER	DESCRIPTION	SUGGESTED LIST PRICE USD ($)
		Select One Code From Each Required Category	
		BASE MACHINE	
		F.O.B. Davenport, Iowa	
0228TC		Hard Cab (For 1400/1500 Series II and Non-Series II Front Mowers) *Requires Code 9006 (BTC10293) 4-Post ROPS Conversion Kit with Canopy and Code 9000 (TCB10620) Front Windshield.*	2,995.00
		ATTACHMENTS - ORDER AS DESIRED	
		Miscellaneous:	
9000		Front Windshield *Can be Used without Cab for Wind Protection. Mounts to 4-Post ROPS.*	460.00
9001		Single Speed Front Windshield Wiper	347.00
9002		(1) Exterior Mirror Kit	132.00
9004		Cab Integrated Heater/Defroster Kit *For 1400/1500 Series II Mowers Only. Must Order (1) of the Following Aditional Parts for Specific Models:* *1420; M139144, M802329, AM117237, M81353 and 14H785* *1435; M139144* *1445/1545; TCU19226* *1565; M138867*	899.00
9005		Cab Integrated Heater/Defroster and Air Conditioner *For 1445/1500 Series II Mowers Only. Compressor Bracket Kit TCB10823 or TCB10824 is Required for AC Installation. Must Order (1) of the Following Aditional Parts for Specific Models:* *1445/1545; TCU19226* *1565; M138867*	2,304.00
9006		4-Post ROPS Conversion Kit with Canopy *Converts Standard 2-Post ROPS to 4-Post with Canopy.*	1,558.00
		ATTACHMENTS FOR FIELD CONVERSION	
		Miscellaneous:	
	TCB10325	(1) Exterior Mirror Kit	160.50

Hard Cab (For 1400/1500 Series II and Non-Series II Front Mowers)
Continued

CODE	ATTACHMENT IDENTIFIER	DESCRIPTION	SUGGESTED LIST PRICE USD ($)
		ATTACHMENTS FOR FIELD CONVERSION Continued...	
	BTC10293	4-Post ROPS Conversion Kit with Canopy *Converts Standard 2-Post ROPS to 4-Post with Canopy.* **Required for new Hard Cab BTC10295.* **Required for new Soft Cab BTC10336.* *(Not compatible with Old Hard Cab BTC10024 and Old Soft Cab BTC10023).* ***Discontinued - 4 Post ROPS Kit TCB10941 only compatible with Old Hard Cab BTC10024 and Old Soft Cab BTC10023.*	1,667.06
	TCB10538	Breakaway Beacon Light *Hard or Soft Cab with 4-Post ROPS Required.*	315.66
	TCB10821	Cab Integrated Heater/Defroster Kit *For 1400/1500 Series II Mowers Only. Must Order (1) of the Following Aditional Parts for Specific Models:* *1420; M139144, M802329, AM117237, M81353 and 14H785* *1435; M139144* *1445/1545; TCU19226* *1565; M138867*	961.93
	TCB10822	Cab Integrated Heater/Defroster and Air Conditioner *For 1445/1500 Series II Mowers Only. Compressor Bracket Kit TCB10823 or TCB10824 is Required for AC Installation. Must Order (1) of the Following Aditional Parts for Specific Models:* *1445/1545; TCU19226* *1565; M138867*	2,465.29
	BTC10377	Compressor Bracket Kit *Required for 1445/1545 AC Installation.*	185.11
	BTC10378	Compressor Bracket Kit	206.51
	TCB10326	Floor Mounted Heater/Defroster Kit *For Series II and Non Series II 1400/1500 Mowers. Must Order (1) of the Following Additional Parts for Specific Models:* *1420; M139144, M802329, AM117237, M81353 and 14H785* *1435; M139144* *1445/1545; M138867* *1565; M138288*	786.46
	TCB10620	Front Windshield *Can be Used without Cab for Wind Protection. Mounts to 4-Post ROPS.*	492.20
	TCB11095	Front Worklight (2) Kit *Requires 4-Post ROPS Conversion Kit with Canopy.*	178.69
	TCB10662	Rear Worklight (2) Kit *Hard or Soft Cab with 4-Post ROPS Required.*	238.61
	TCB10981	Single Speed Front Windshield Wiper	371.29

Soft Cab (For 1400/1500 Series II and Non-Series II Front Mowers)

Equipment for Base Machine

Modular Design
Side Panels with Doors
Rear Panel with Window
Two Work Lights with Wiring Harness

Accoustic Canopy Liner

CODE	ATTACHMENT IDENTIFIER	DESCRIPTION	SUGGESTED LIST PRICE USD ($)
		Select One Code From Each Required Category	
		BASE MACHINE	
		F.O.B. Davenport, Iowa	
0227TC		Soft Cab (For 1400/1500 Series II and Non-Series II Front Mowers) *Requires Code 9004 (BTC10293) 4-Post ROPS Conversion Kit with Canopy and Code 9000 (TCB10620) Front Windshield.*	2,135.00
		ATTACHMENTS - ORDER AS DESIRED	
		Miscellaneous:	
9000		Front Windshield *Can be Used without Cab for Wind Protection. Mounts to 4-Post ROPS.*	460.00
9001		Single Speed Front Windshield Wiper	347.00
9002		(1) Exterior Mirror Kit	132.00
9003		Floor Mounted Heater/Defroster Kit *For Series II and Non-Series II 1400/1500 Mowers. Can not be upgraded to AC Compatible. Must Order (1) of the Following Additional Parts for Specific Models:* *1420; M139144, M802329, AM117237, M81353, 14H785, M805564, M805702* *1435; M139144, M805564, M805702* *1445/1545; TCU19226, M805565, M805834, M805835* *1565; M138867, M805565, M805834, M805835*	735.00
9004		4-Post ROPS Conversion Kit with Canopy *Converts Standard 2-Post ROPS to 4-Post with Canopy.*	1,558.00
		ATTACHMENTS FOR FIELD CONVERSION	
		Miscellaneous:	
	TCB10325	(1) Exterior Mirror Kit	160.50
	BTC10293	4-Post ROPS Conversion Kit with Canopy *Converts Standard 2-Post ROPS to 4-Post with Canopy.* **Required for new Hard Cab BTC10295.* **Required for new Soft Cab BTC10336.* *(Not compatible with Old Hard Cab BTC10024 and Old Soft Cab BTC10023).* ***Discontinued - 4 Post ROPS Kit TCB10941 only compatible with Old Hard Cab BTC10024 and Old Soft Cab BTC10023.*	1,667.06

Soft Cab (For 1400/1500 Series II and Non-Series II Front Mowers)

Continued

CODE	ATTACHMENT IDENTIFIER	DESCRIPTION	SUGGESTED LIST PRICE USD ($)
		ATTACHMENTS FOR FIELD CONVERSION Continued...	
	TCB10538	Breakaway Beacon Light *Hard or Soft Cab with 4-Post ROPS Required.*	315.66
	BTC10377	Compressor Bracket Kit *Required for 1445/1545 AC Installation.*	185.11
	BTC10378	Compressor Bracket Kit	206.51
	TCB10326	Floor Mounted Heater/Defroster Kit *For Series II and Non-Series II 1400/1500 Mowers. Can not be upgraded to AC Compatible. Must Order (1) of the Following Additional Parts for Specific Models:* *1420; M139144, M802329, AM117237, M81353, 14H785, M805564, M805702* *1435; M139144, M805564, M805702* *1445/1545; TCU19226, M805565, M805834, M805835* *1565; M138867, M805565, M805834, M805835*	786.46
	TCB10620	Front Windshield *Can be Used without Cab for Wind Protection. Mounts to 4-Post ROPS.*	492.20
	TCB11095	Front Worklight (2) Kit *Requires 4-Post ROPS Conversion Kit with Canopy.*	178.69
	TCB10662	Rear Worklight (2) Kit *Hard or Soft Cab with 4-Post ROPS Required.*	238.61
	TCB10981	Single Speed Front Windshield Wiper	371.29

Material Collection System (For F725, F735 Front Mowers)

Equipment for Base Machine

9 Bushel Capacity
Polyethylene Hopper
Less Power Flow Blower

CODE	ATTACHMENT IDENTIFIER	DESCRIPTION	SUGGESTED LIST PRICE USD ($)
		Select One Code From Each Required Category	
		BASE MACHINE	
		F.O.B. Davenport, Iowa	
1341M		Material Collection System (For F725, F735 Front Mowers)	2,091.00
		POWER FLOW BLOWER	
1000		Power Flow Blower for 48 In. Mower	461.00
1001		Power Flow Blower for 54 In. Mower	461.00
1002		Less Power Flow Blower	In Base Price
		ATTACHMENTS FOR FIELD CONVERSION	
		Material Collection System Power Flow Blowers:	
	BM19089	Blower Assembly for 48 In. Mower	541.41
	BM19090	Blower Assembly for 54 In. Mower	541.41
		Material Collection System:	
	BM17545	Tub Inserts	See Parts

MCS 600 Hydraulic High-Dump Material Collection System (For 1400 4WD/1500 Series II and Non-Series II Front Mowers)

Equipment for Base Machine

17 Bushel Capacity
Hydraulic Dump System
High Performance Blower
Lift Height - 6.23 Ft.
Clam Shell Design
Fiberglass Structure

Easy To Dump System
Low Noise System
6 Blade Commercial Blower

CODE	ATTACHMENT IDENTIFIER	DESCRIPTION	SUGGESTED LIST PRICE USD ($)
		Select One Code From Each Required Category	
		BASE MACHINE	
		F.O.B. Davenport, Iowa	
0801TC		MCS 600 Hydraulic High-Dump Material Collection System (For 1400 4WD/1500 Series II and Non-Series II Front Mowers) *Mowers Require TCB10567 Rear Auxillary Hydraulic Kit and TCB10388 Two-Spool Auxillary Hydraulic Kit.* **Drive Coupler AM102741 is required for all MCS 600 Material Collection Systems.* *All 1400 4WD Mowers can not be Operated with MCS and Cab. MCS can not be Used with the 72 In. 7-Iron V-Flex Commercial Side Discharge Mower Deck.*	6,220.00
		CHUTE	
1000		72 In. Chute with MCS Adapter	In Base Price
1001		60 In. Chute with MCS Adapter	Same Price
1010		Less Chute and Less MCS Adapter	-316.00
		ATTACHMENTS FOR FIELD CONVERSION	
		Hydraulics:	
	TCB11475	Double Spool Auxiliary Hydraulic Kit	714.76
	TCB10567	Rear Auxiliary Hydraulic Outlet Kit	314.59
		Material Collection System:	
	TCB11588	60 In. Chute with MCS Adapter	362.73
	TCB11589	72 In. Chute with MCS Adapter	362.73
	AM102741	Drive Coupler *Needs to be ordered with all MCS 600 Material Collection systems for installation on 1400 and 1500 series Front Mowers.*	See Parts
	TCA14116	MCS Support Stands	See Parts

60 Heavy-Duty Rotary Broom (For 1400/1500 Series II and Non-Series II Front Mowers)

Equipment for Base Machine

57 In. Clearing Width "Straight"
50 In. Clearing Width "Fully Angled"
0 Degrees Straight, 15-30 Degrees Left or Right Brush Angle
26 In. Diameter Polypropylene Brush
Heavy Duty Center Drive Gearbox
Storage Stand
Less Lift Arms and Drive Shaft
Chain and Sprocket Final Drive
(2) Caster Wheels
Steel Hood

CODE	ATTACHMENT IDENTIFIER	DESCRIPTION	SUGGESTED LIST PRICE USD ($)
		Select One Code From Each Required Category	
		BASE MACHINE	
		F.O.B. Davenport, Iowa	
0500TC		60 Heavy-Duty Rotary Broom (For 1400/1500 Series II and Non-Series II Front Mowers) *Single Spool Auxiliary Hydraulic Kit(TCB11474) is Required for Operation of Hydraulic Angling. Ballast Recommendations: (6) 42 Lb.Quik-Tatch Weights (R66949)Mounted on Rear Weight Mounting Kit (TCB10303).*	3,215.00
		LIFT ARMS AND DRIVE SHAFT	
1000		Lift Arms, Cylinders, Drive Shaft and Hardware	1,617.00
1010		Less Lift Arms Cylinders, Drive Shaft and Hardware	In Base Price
		ATTACHMENTS FOR FIELD CONVERSION	
		Hydraulics:	
	TCB11474	Single Spool Auxiliary Hydraulic Kit	510.39
		Miscellaneous:	
	BM20706	19.25x12.5x6.5 Heavy Duty Wheel Kit	361.66
	TCB10391	60 Rotary Broom Lift Arms, Drive Shaft and Hardware Kit	1,854.31
	TCB10392	Debris Deflector	408.74
	AM128682	Wafers, Polypropylene Bristle (Pack of 16)	See Parts
	AM128683	Wafers, Steel Bristle (Pack of 16)	See Parts
		Weights:	
	BM17972	50 Lb. Cast Iron Wheel Weight (1) *For 23x8.50-12 and 23x10.50-12 Drive Wheels.*	128.40
	BM17985	Mounting Hardware (1) for Attaching One Wheel Weight *Attaches (1) 50 lb. Weight to GTs, GXs, X500 M-Ts and F1400s.*	11.77

60 Heavy-Duty Rotary Broom (For 1400/1500 Series II and Non-Series II Front Mowers)

Continued

CODE	ATTACHMENT IDENTIFIER	DESCRIPTION	SUGGESTED LIST PRICE USD ($)
		ATTACHMENTS FOR FIELD CONVERSION Continued...	
	R66949	Quik-Tatch Weight, 42 Lb.	62.06
	TCB10303	Rear Weight Mounting Kit *Recommended for Ballast when Using Certain Implements. See Sales Manual for Instructions.*	103.79

46 In. Single-Stage Snow Thrower (For F725 and F735 Front Mowers)

Equipment for Base Machine

46 In. Clearing Width
12 In. Diameter Auger
Reversible and Replaceable Cutting Blade
Center Deflector Plate
Adjustable Spout Deflector
Adjustable Skid Shoes
Electric Spout Rotation
Drift Knife

CODE	ATTACHMENT IDENTIFIER	DESCRIPTION	SUGGESTED LIST PRICE USD ($)
		Select One Code From Each Required Category	
		BASE MACHINE	
		F.O.B. Davenport, Iowa	
3290M		46 In. Single-Stage Snow Thrower (For F725 and F735 Front Mowers) *BM19384 is Required for use on F735 Mowers.* *See Sales Manual for Ballast Requirements.*	2,240.00
		ATTACHMENTS FOR FIELD CONVERSION	
		Miscellaneous:	
	AM128337	Left-Side Skid Shoe Plate and Hardware	See Parts
	AM128336	Right-Side Skid Shoe Plate and Hardware	See Parts
		Mower Deck and Mower Deck Attachments:	
	BM19384	48 In. and 54 In. Mower Lift Arms *For F735 Mower Only. Lift Arms are Standard on F725 Mower.*	See Parts
		Weights:	
	R66949	Quik-Tatch Weight, 42 Lb.	62.06

47 In. Heavy-Duty Two-Stage Snow Blower (For 1400 Series II and Non-Series II Front Mowers)

Equipment for Base Machine

Two-Stage Design
Hydraulic Lift
47 In. Clearing Width
15.5 In. Diameter Impeller
16 In. Diameter Auger
(4) Spare Shear Bolts Mounted to Shell
Adjustable Spout Cap Deflector
Large, Adjustable Skid Shoes
Reversible, Replaceable Scraper Blade
Hydraulic Discharge Chute
Rotation 90 Degrees Right and Left (180 Degrees Total)
HD Auger Bevel Gearbox Drive
Less Lift Arms and Drive Shaft

CODE	ATTACHMENT IDENTIFIER	DESCRIPTION	SUGGESTED LIST PRICE USD ($)
		Select One Code From Each Required Category	
		BASE MACHINE	
		F.O.B. Davenport, Iowa	
0370TC		47 In. Heavy-Duty Two-Stage Snow Blower (For 1400 Series II and Non-Series II Front Mowers) *Will Retrofit F900 and F1145 Mowers. Single-Spool Auxiliary Hydraulic Kit (TCB11474) is required for operation of Shoot Rotation. Ballast Recommendations: (4) 42 Lb. Quik-Tatch Weights (R66949) Mounted on Rear Weight Mounting Kit (TCB10303). 23x8.5-12 In. Tires are recommended to stay with-in Cleaning Width.*	4,099.00
		LIFT ARMS AND DRIVE SHAFT	
1000		Lift Arms, Drive Shaft and Hardware	435.00
1010		Less Lift Arms, Drive Shaft and Hardware *To Attach Snow Blower to F900/F1145 Front Mowers, See Sales Manual for instruction.*	In Base Price
		ATTACHMENTS FOR FIELD CONVERSION	
		Hydraulics:	
	TCB11474	Single Spool Auxiliary Hydraulic Kit	510.39
		Miscellaneous:	
	M88984	Drift Blade *Requires (4) 19H1914 Bolts and (4) N10217 Lock Nuts.*	See Parts
	TY15956	Tire Chains (Pair) for 23x10.50-12 In. Drive Tires	See Parts
	TY15841	Tire Chains (Pair) for 23x8.50-12 In. Drive Tires	See Parts
	TCB10448	Two-Stage Snow Blower Lift Arms, Drive Shaft and Hardware Kit	498.61
		Weights:	
	BM17972	50 Lb. Cast Iron Wheel Weight (1) *For 23x8.50-12 and 23x10.50-12 Drive Wheels.*	128.40

47 In. Heavy-Duty Two-Stage Snow Blower (For 1400 Series II and Non-Series II Front Mowers)

Continued

CODE	ATTACHMENT IDENTIFIER	DESCRIPTION	SUGGESTED LIST PRICE USD ($)
		ATTACHMENTS FOR FIELD CONVERSION Continued...	
	BM17985	Mounting Hardware (1) for Attaching One Wheel Weight *Attaches (1) 50 lb. Weight to GTs, GXs, X500 M-Ts and F1400s.*	11.77
	R66949	Quik-Tatch Weight, 42 Lb.	62.06
	TCB10303	Rear Weight Mounting Kit *Recommended for Ballast when Using Certain Implements. See Sales Manual for Instructions.*	103.79

60 In. Heavy-Duty Two-Stage Snow Blower (For 1400/1500 Series II and Non-Series II Front Mowers)

Equipment for Base Machine

```
Two-Stage Design                    Scraper Blade
Hydraulic Lift                     Hydraulic Discharge Chute
59 In. Clearing Width               Rotation 90 Degrees Right and
60 In. Overall Width                  Left
16 In. Diameter Auger              HD Auger Gearbox Drive
Adjustable Spout Cap Deflector     Less Lift Arms and Drive Shaft
Large, Adjustable Skid Shoes
Reversible, Replaceable
```

CODE	ATTACHMENT IDENTIFIER	DESCRIPTION	SUGGESTED LIST PRICE USD ($)
		Select One Code From Each Required Category	
		BASE MACHINE	
		F.O.B. Davenport, Iowa	
0380TC		60 In. Heavy-Duty Two-Stage Snow Blower (For 1400/1500 Series II and Non-Series II Front Mowers) *Single Spool Auxiliary Hydraulic Kit (TCB11474) is Required for Operation of Chute Rotation. Ballast Recommendations: (6) 42 Lb. Quick-Tatch Weights (R66949) Mounted on Rear Weight Mounting Kit (TCB10303).*	4,619.00
		LIFT ARMS AND DRIVE SHAFT	
1000		Lift Arms, Drive Shaft and Hardware	435.00
1010		Less Lift Arms *To Attach Snow Blower to F900/F1145 Front Mowers, See Sales Manual for Instruction.*	In Base Price
		ATTACHMENTS FOR FIELD CONVERSION	
		Hydraulics:	
	TCB11474	Single Spool Auxiliary Hydraulic Kit	510.39
		Miscellaneous:	
	M88984	Drift Blade *Requires (4) 19H1914 Bolts and (4) N10217 Lock Nuts.*	See Parts
	TY15956	Tire Chains (Pair) for 23x10.50-12 In. Drive Tires	See Parts
	TY15841	Tire Chains (Pair) for 23x8.50-12 In. Drive Tires	See Parts
	TCB10448	Two-Stage Snow Blower Lift Arms, Drive Shaft and Hardware Kit	498.61
		Weights:	
	BM17972	50 Lb. Cast Iron Wheel Weight (1) *For 23x8.50-12 and 23x10.50-12 Drive Wheels.*	128.40
	BM17985	Mounting Hardware (1) for Attaching One Wheel Weight *Attaches (1) 50 lb. Weight to GTs, GXs, X500 M-Ts and F1400s.*	11.77

60 In. Heavy-Duty Two-Stage Snow Blower (For 1400/1500 Series II and Non-Series II Front Mowers)

Continued

CODE	ATTACHMENT IDENTIFIER	DESCRIPTION	SUGGESTED LIST PRICE USD ($)
		ATTACHMENTS FOR FIELD CONVERSION Continued...	
	R66949	Quik-Tatch Weight, 42 Lb.	62.06
	TCB10303	Rear Weight Mounting Kit *Recommended for Ballast when Using Certain Implements. See Sales Manual for Instructions.*	103.79

Current Attachments for Non-Current Commercial Front Mowers and Equipment

CODE	ATTACHMENT IDENTIFIER	DESCRIPTION	SUGGESTED LIST PRICE USD ($)
		ATTACHMENTS FOR FIELD CONVERSION	
		Miscellaneous:	
	BM18123	2000 RPM Front PTO (F900's)	1,241.20
	BM17714	Auxiliary Hydraulic Kit For F900 Series and F1145	174.41
		Mower Deck and Mower Deck Attachments:	
	BM17436	72 In. Commercial Side Discharge Mower Deck (For F1145)	4,909.16

1600 Turbo Series II Commercial Wide Area Mower with 4-Post ROPS Canopy

Equipment for Base Machine

57.3 Gross (55.3Net) HP Yanmar Four Cylinder Liquid Cooled Turbo-Charged Diesel Engine Displacement (122 Cu. In.)
Dual Element Air Cleaner
Air Restriction Indicator
55 AMP Automotive Alternator
22 U.S. Gallon Fuel Capacity
Two Pedal Hydrostatic Foot Control
Hydrostatic Power Steering
Hydrostatic Transmission
Two Speed Transaxle
Hydrostatic Four Wheel Drive On-Demand or Full-time Mechanical Rear Wheel Drive
Differential Front Wheel Lock
128 In. Cutting Width
Front Head Light
26x12-12 In. 6PR Drive Tires
18x9.5-8 In. 6PR Steering Tires
Electronic Cruise Control
Radiator/Oil Cooler
Individual Turn Assist Brakes
Wet Disk Brakes
Master Stop Brake
7-Gauge Fabricated Steel Mower Decks
Hydraulic Deck Drive
Belt Drive Blades
Center Deck (1) 62 In. Commercial Rear Discharge, Three Blade, Center Mower Deck
70-Degree Rotate for Service (2) 42 In. Commercial Rear Discharge, Two Blade, Wing Mower Decks
90-Degree Rotate for Service Side Wing Decks
Run Flat Deck Caster Tires
Impact Absorbing Wing Decks
Hourmeter
Fuel Gauge
Tilt Steering Wheel
Operator Presence System
Engine Heater Light
Engine Coolant Temperature Light
Low Oil Pressure Warning Light
Battery Discharge Light
Water Temperature Gauge
Air Ride Suspension Seat with Backangle Adjustment, Armrests, and Seat Belt
Four-Post ROPS(Roll- Over Protective Structure) with Canopy Meets ISO21299
Cup Holder

CODE	ATTACHMENT IDENTIFIER	DESCRIPTION	SUGGESTED LIST PRICE USD ($)

Select One Code From Each Required Category

BASE MACHINE

F.O.B. Raleigh, North Carolina

0704TC		1600 Turbo Series II Commercial Wide Area Mower with 4-Post ROPS Canopy	66,021.00

ATTACHMENTS FOR FIELD CONVERSION

		Engine:	
	TCA19918	B20 Biodiesel Conversion Kit	See Parts
		Miscellaneous:	
	TCB11580	Breakaway Beacon Light Kit *Applicable with serial numbers starting with 090001.*	554.26
	TCB11701	Road Light Kit *Requires TCB11581 Work Light Kit. Kit Includes Two Combination Turn Signals/Warning Flashers/Taillights, Mounting Brackets, Wiring Harness and Turn Signal Switch. Applicable for serial numbers starting with 090001.*	695.50
	TCA13825	Slow Moving Vehicle Sign Kit	See Parts
	TCB11581	Work Light Kit *Kit Includes Four Lights, Mounting Brackets, Wiring Harness and On/Off Switch. Applicable for serial numbers starting with 090001* *The model year 2010 and earlier, wiring harness part number TCA13797 is not part of this kit and must be ordered separately.*	480.43
		Mower Deck and Mower Deck Attachments:	
	TCA20363	Semi pneumatic caster tire	See Parts

1600 Turbo Series II Commercial Wide Area Mower with 4-Post ROPS Canopy
Continued

CODE	ATTACHMENT IDENTIFIER	DESCRIPTION	SUGGESTED LIST PRICE USD ($)
		ATTACHMENTS FOR FIELD CONVERSION Continued...	
	TCB10507	Tricycler Mulching Kit *Includes Mulch Blades, Baffles and Deflector Shields For Center and Wing Mower Decks. Applicable for serial numbers below 1TC1600TPBT100007. The model year 2011 and earlier.*	522.16
	BTC10335	Tricycler Mulching Kit *Applicable for serial numbers starting with 1TC1600TPBT100007 and higher. The model year 2012 and later.*	522.16

1600 Turbo Series II Commercial Wide Area Mower With 2 Post Folding ROPS

Equipment for Base Machine

57.3 Gross (55.3Net) HP Yanmar Four Cylinder Liquid Cooled
57.3 Turbo-Charged Diesel Engine Displacement (122 Cu. In.)
Dual Element Air Cleaner
Air Restriction Indicator
55 AMP Automotive Alternator
22 U.S. Gallon Fuel Capacity
Two Pedal Hydrostatic Foot Control
Hydrostatic Power Steering
Hydrostatic Transmission
Two Speed Transaxle
Hydrostatic Four Wheel Drive On-Demand or Full-time
Mechanical Rear Wheel Drive
Differential Front Wheel Lock
128 In. Cutting Width
Front Head Light
26x12-12 In. 6PR Drive Tires
18x9.5-8 In. 6PR Steering Tires
Electronic Cruise Control
Radiator/Oil Cooler
Individual Turn Assist Brakes
Wet Disk Brakes
Master Stop Brake
7-Gauge Fabricated Steel Mower Decks
Hydraulic Deck Drive
Belt Drive Blades
Center Deck (1) 62 In. Commercial Rear Discharge, Three Blade, Center Mower Deck
70-Degree Rotate for Service
(2) 42 In. Commercial Rear Discharge, Two Blade, Wing Mower Decks
90-Degree Rotate for Service Side Wing Decks
Run Flat Deck Caster Tires
Impact Absorbing Wing Decks
Hourmeter
Fuel Gauge
Tilt Steering Wheel
Operator Presence System
Engine Heater Light
Engine Coolant Temperature Light
Low Oil Pressure Warning Light
Battery Discharge Light
Water Temperature Gauge
Air Ride Suspension Seat With Backangle Adjustment, Armrests, and Seat Belt
Folding Two-Post ROPS (Roll- Over Protective Structure) Meets ISO21299
Cup Holder

CODE	ATTACHMENT IDENTIFIER	DESCRIPTION	SUGGESTED LIST PRICE USD ($)

Select One Code From Each Required Category

BASE MACHINE

F.O.B. Raleigh, North Carolina

0703TC		1600 Turbo Series II Commercial Wide Area Mower With 2 Post Folding ROPS	64,360.00

ATTACHMENTS FOR FIELD CONVERSION

		Miscellaneous:	
	TCB11580	Breakaway Beacon Light Kit *Applicable with serial numbers starting with 090001.*	554.26
	TCB11701	Road Light Kit *Requires TCB11581 Work Light Kit. Kit Includes Two Combination Turn Signals/Warning Flashers/Taillights, Mounting Brackets, Wiring Harness and Turn Signal Switch. Applicable for serial numbers starting with 090001.*	695.50
	TCA13825	Slow Moving Vehicle Sign Kit	See Parts
	TCB11581	Work Light Kit *Kit Includes Four Lights, Mounting Brackets, Wiring Harness and On/Off Switch. Applicable for serial numbers starting with 090001* *The model year 2010 and earlier, wiring harness part number TCA13797 is not part of this kit and must be ordered separately.*	480.43
		Mower Deck and Mower Deck Attachments:	
	TCA20363	Semi pneumatic caster tire	See Parts

1600 Turbo Series II Commercial Wide Area Mower With 2 Post Folding ROPS
Continued

CODE	ATTACHMENT IDENTIFIER	DESCRIPTION	SUGGESTED LIST PRICE USD ($)
		ATTACHMENTS FOR FIELD CONVERSION Continued...	
	TCB10507	Tricycler Mulching Kit *Includes Mulch Blades, Baffles and Deflector Shields For Center and Wing Mower Decks. Applicable for serial numbers below 1TC1600TPBT100007. The model year 2011 and earlier.*	522.16
	BTC10335	Tricycler Mulching Kit *Applicable for serial numbers starting with 1TC1600TPBT100007 and higher. The model year 2012 and later.*	522.16

(MY2013) 1025R Sub-Compact Utility Tractor (18 PTO hp)

Equipment for Base Machine

ENGINE:
Yanmar 3 Cylinder Liquid Cooled Diesel Engine
Tier IV EPA Emmissions Certified
Engine HP 24.2 (17.8 kW), PS PTO HP 18.0 (13.4 kW)
Rated Speed 3200 RPM
Indirect Fuel Injection
Auto Bleed Fuel System
Glow Plug Cold Starting Aid
Anti-Freeze
Dry Type Air Cleaner With Safety Element
Fully Enclosed Engine and Muffler With Horizontal Exhaust
5.6 Gallon Fuel Tank Capacity (21.2 L)
Hand Throttle
Key Engine Shut Off

TRANSMISSION:
Hydrostatic Transmission: Infinitely Variable - 2 Speed Transaxle
2-Pedal Foot Operated Speed and Direction Control
Differential Lock
Cruise Control

FRONT/REAR AXLE:
Flanged Rear Axle
Spur Gear Final Drive
4WD

STEERING AND BRAKES:
Hydrostatic Power Steering
Tilt Steering
Wheel Brakes
Park Brake
Wet Disk Brakes

HYDRAULICS:
Open Center Hydraulic System
Hydraulic Pump - Total Flow 6.3 GPM (24 L/min) with Filter
Working Pressure (2000 PSI)
Dual Mid SCV Standard

PTO:
Hydrostatic Model:
Mid PTO Standard Equipment
Independent Mid and Rear PTO
540-RPM Rear PTO
Hydraulic PTO Clutch
PTO Brake
Separate or Simultaneous Operation of Mid and Rear PTO
Flip Up PTO Shield

ROCKSHAFT, 3-PT. HITCH, AND HITCH PLATE:
Rockshaft
Limited Category 1, 3-Pt. Position Control Hitch
Rate of Drop/Stop Valve
Hitch Plate

INSTRUMENTATION:
Fuel Gauge
Tachometer/Hour Meter
Oil Pressure Indicator Light
Coolant Temperature Light
Alternator Indicator Light
Flashing Warning Light Indicator

ELECTRICAL:
12-Volt Electrical System
Wet Battery With 500 Cold Cranking Amps
40 Amp Alternator
Key Ignition Starter With Neutral Start Switch

LIGHTS:
Two Front Halogen Head Lights
Two Flashing Warning Lights
Two Fender Lights

OPERATOR PROTECTIVE STRUCTURE:
Folding ROPS (Roll-Over Protective Structure)
** Meets SAE J2194 and OSHA 1928 ROPS Certification Standards
Deluxe Cushion Seat With Seat Belt
Operator Presence System

MISCELLANEOUS:
SMV Emblem
Front Weight Bracket
Tilt-Up Hood
Cupholder - Left Console
Mower Deck Height Adjustment
Tool Box
12V Outlet
Floor Mat

BASE MACHINE (4WD):
Engage on the go 4WD
Two - Steel Wheels With 26x12-12 4PR (R4) Rear Tires
Two - Steel Wheels With 18x8.50-10 4PR (R4) Front Tires

Interim Tier IV EPA Emmissions Certified Engine HP 25.2 (18.5 kW), PS PTO HP 18.0 (13.4 kW) Rated Speed 3200 RPM

CODE	ATTACHMENT IDENTIFIER	DESCRIPTION	SUGGESTED LIST PRICE USD ($)

Select One Code From Each Required Category

BASE MACHINE

F.O.B. Grovetown, Georgia

0284LV	(MY2013) 1025R Sub-Compact Utility Tractor (18 PTO hp)	13,361.00

OPERATORS MANUAL

0409	English North American Operator's Manual and Decal Kit	In Base Price
0437	Spanish North American Operator's Manual and Decal Kit	Same Price

REAR WHEELS WITH TIRES (TWO)

(MY2013) 1025R Sub-Compact Utility Tractor (18 PTO hp)
Continued

CODE	ATTACHMENT IDENTIFIER	DESCRIPTION	SUGGESTED LIST PRICE USD ($)
		REAR WHEELS WITH TIRES (TWO) Continued...	
5203		26X12-12 4 PR Rear R3 Turf Bias	Same Price
5204		26X12-12 4PR Rear R4 Ind Bias	In Base Price
		FRONT WHEELS WITH TIRES (TWO)	
6203		18X8.50-10 4 PR Front R3 Turf Bias	Same Price
6204		18X8.50-10 4PR Front R4 Ind Bias	In Base Price
		ATTACHMENTS FOR FIELD CONVERSION	
		Engine:	
	AM134805	Engine Block Heater Adapter	See Parts
	AR87167	Engine Coolant Heater (110 Volt) *Requires AM134805 Engine Block Heater Adapter.*	See Parts
	AM108146	Spark Arrester Screen for Muffler	See Parts
		Hitch:	
	LVU12858	iMatch Quick Hitch Bushings	See Parts
	LVB25255	iMatch Quick Hitch Category 1 *Bushings NOT included. Orderable through parts (LVU15507).*	315.70
	LVB25976	iMatch Quick Hitch Category 1 with adjustable top hook	350.90
		Hood Guards:	
	BW15901	Deluxe Hood Guard (1023E, 1025R & 1026R Tractors) *Standard on H120 Loaders.*	226.60
	BW15900	Hood Guard - (1023E, 1025R & 1026R Tractors) *Standard on D120 Loaders.*	203.57
		Hydraulics:	
	LVB25956	Power Beyond Kit *Includes Rear Mounted Hydraulic Couplers and Hose.*	169.40
	LVB25837	Rear Hydraulic Kit *Not compatible with LVB25956 (Power Beyond Kit) or LVB25838 (Third SCV Kit).*	298.10
	LVB25838	Third Selective Control Valve Kit *Not compatible with LVB25956 (Power Beyond Kit).*	660.00
		Lighting:	
	LVB25547	Auxiliary Rear Work Light Kit (1 Light) *Includes Wiring Harness. Not Compatible with Forward Lighting Kit (LVB25546). Not for use with Cab Tractors.*	62.70
	LVB25546	Forward Lighting Kit (2 Lights) *Requires Light Brush Guard Kit LBV25016.* *Cannot be used with Rear Work Lighting Kit (LVB25547) at the same time.*	95.70
	BLV10319	Warning Light Brush Guard Kit (Two Guards)	49.50
		Miscellaneous:	
	LVB26110	Loader Mount Toolbox Kit	63.80

(MY2013) 1025R Sub-Compact Utility Tractor (18 PTO hp)
Continued

CODE	ATTACHMENT IDENTIFIER	DESCRIPTION	SUGGESTED LIST PRICE USD ($)
		ATTACHMENTS FOR FIELD CONVERSION Continued...	
		Operator Environment:	
	TY25324	Weather Protection Umbrella	See Parts
		Order Zone: *For ordering and pricing information on the below product, Dealers can refer to the John Deere Order Zone site via the Pathways Home Page, then "Sales" then "John Deere Licensed Products" then "Order Zone GenII". Customers must contact your local JD Dealer.*	
	720969235	3-Point Hitch Tractor Receiver Hitch	In Catalog
	312012523	ABS Plastic Canopy	In Catalog
		Seats / Wheels / Tires:	
	TY15958	Tire Chains (Pair) for 26x12-12 Tires	See Parts
		Spanish North American Kit:	
	LVB26209	Spanish North American Owner's Manual and Decal Kit	119.90
		Weights:	
	BM17972	50 Lb. Cast Iron Wheel Weight (1)	128.40
	BM17976	50 Lb. Wheel Weight, Rear Plastic (1) with Mounting Hardware	66.34
	BM17973	72 Lb. Cast Iron Starter Wheel Weight (1)	181.90
	LVB25363	Front Weight Bracket Extension Kit (1023E, 1025R, 1026R, 2305, 2025R, 2320, 2520) *Includes Extension Bracket and Hardware (Including Rod and Spring Pins) to hold up to seven Quik-Tatch Weights.*	210.10
	BM18101	Mounting Hardware (1) for Attaching 72 Lb. Starter Weight and (2) 50 Lb. Cast Iron Weights on 26 In. Tire	28.89
	BM18089	Mounting Hardware (1) for Attaching 72 Lb. Starter Weight on 26x12-12 Tire	21.40
	BM17977	Mounting Hardware (1) for Attaching Two 50 lb. Weights to 23 In., 24 In. or 26 In. Tires	20.33
	R66949	Quik-Tatch Weight, 42 Lb. *Requires (1)M128726 Rod, and (2)A15147 Spring Clips.*	62.06
		Wheels and Tires Front:	
	LVB25848	Two Steel Wheels with 18L-18.5-10 In. 4PR Industrial (R4) Front Tires	311.30
	LVB25850	Two Steel Wheels with 18L-8.5-10 In. 4PR Turf (R3) Front Tires	295.90
		Wheels and Tires Rear:	
	LVB25849	Two Steel Wheels with 26x12.00-12 In. 4PR (R3) Turf Tires	657.80
	LVB25847	Two Steel Wheels with 26x12.00-12 In. 4PR (R4) Rear Tires	677.60

EXTENDED WARRANTY - RESIDENTIAL OWNERS/USE

Visit http://www.JohnDeere.com/ServicePlans for more information on John Deere Service Contracts. May not be Available in Parts of the U.S., Not Available in Canada. Price may vary due to driving distance and/or time from machine to dealership location.

(MY2013) 1025R Sub-Compact Utility Tractor (18 PTO hp)
Continued

(MY2013) 1025R TLB Sub-Compact Utility Tractor (18 PTO hp)

Equipment for Base Machine

ENGINE:
Yanmar 3 Cylinder Liquid Cooled Diesel Engine
Tier IV EPA Emmissions Certified
Engine HP 24.2 (17.8 kW), PS PTO HP 18.0 (13.4 kW)
Rated Speed 3200 RPM
Indirect Fuel Injection
Auto Bleed Fuel System
Glow Plug Cold Starting Aid
Anti-Freeze
Dry Type Air Cleaner With Safety Element
Fully Enclosed Engine and Muffler With Horizontal Exhaust
5.6 Gallon Fuel Tank Capacity (21.2 L)
Hand Throttle
Key Engine Shut Off

TRANSMISSION:
Hydrostatic Transmission:
Infinitely Variable - 2 Speed Transaxle
2-Pedal Foot Operated Speed and Direction Control
Differential Lock
Cruise Control

FRONT/REAR AXLE:
Flanged Rear Axle
Spur Gear Final Drive
4WD

STEERING AND BRAKES:
Hydrostatic Power Steering
Tilt Steering
Wheel Brakes
Park Brake
Wet Disk Brakes

HYDRAULICS:
Open Center Hydraulic System
Hydraulic Pump - Total Flow 6.3 GPM (24 L/min) with Filter
Working Pressure (2000 PSI)
Dual Mid SCV Standard

PTO:
Hydrostatic Model:
Mid PTO Standard Equipment
Independent Mid and Rear PTO
540-RPM Rear PTO
Hydraulic PTO Clutch
PTO Brake
Separate or Simultaneous Operation of Mid and Rear PTO
Flip Up PTO Shield

ROCKSHAFT, 3-PT. HITCH, AND HITCH PLATE:
Rockshaft
Limited Category 1, 3-Pt. Position Control Hitch
Rate of Drop/Stop Valve
Hitch Plate

INSTRUMENTATION:
Fuel Gauge
Tachometer/Hour Meter
Oil Pressure Indicator Light
Coolant Temperature Light
Alternator Indicator Light
Flashing Warning Light Indicator

ELECTRICAL:
12-Volt Electrical System
Wet Battery With 500 Cold Cranking Amps
40 Amp Alternator
Key Ignition Starter With Neutral Start Switch

LIGHTS:
Two Front Halogen Head Lights
Two Flashing Warning Lights
Two Fender Lights

OPERATOR PROTECTIVE STRUCTURE:
Folding ROPS (Roll-Over Protective Structure)
** Meets SAE J2194 and OSHA 1928 ROPS Certification Standards
Deluxe Cushion Seat With Seat Belt
Operator Presence System

MISCELLANEOUS:
SMV Emblem
Front Weight Bracket
Tilt-Up Hood
Cupholder - Left Console
Mower Deck Height Adjustment
Tool Box
12V Outlet
Floor Mat

BASE MACHINE (4WD):
Engage on the go 4WD
Two - Steel Wheels With 26x12-12 4PR (R4) Rear Tires
Two - Steel Wheels With 18x8.50-10 4PR (R4) Front Tires

Interim Tier IV EPA Emmissions Certified Engine HP 25.2 (18.5 kW), PS PTO HP 18.0 (13.4 kW) Rated Speed 3200 RPM

LOADER:
49 In.(1250 mm) Quick Change Materials Bucket
Quick Change Attachment Carrier
Quik-Park Loader Mounting System
Mounting Frame for 1023E and 1026R Series Tractors
Deluxe Hood Guard
Mechanical Bucket Level Indicator
Oil Line Cover

BACKHOE:
6 ft. 2 In. (1.89 m) Digging Depth
One Double Acting Swing Cylinder
150 Degree Swing
Narrow Control Console
Two Lever Control
Six Spool Control Valve Hydraulics
12 In. Bucket
Swivel Seat Bracket
Transport Locking Pins
Hydraulic Stabilizers
Subframe Mounting and Power Beyond Hydraulics

CODE	ATTACHMENT IDENTIFIER	DESCRIPTION	SUGGESTED LIST PRICE USD ($)

Select One Code From Each Required Category

BASE MACHINE

F.O.B. Grovetown, Georgia

0283LV	(MY2013) 1025R TLB Sub-Compact Utility Tractor (18 PTO hp) *Base Machine Suggested List Price Does Include:*	22,348.00

(MY2013) 1025R TLB Sub-Compact Utility Tractor (18 PTO hp)

Continued

CODE	ATTACHMENT IDENTIFIER	DESCRIPTION	SUGGESTED LIST PRICE USD ($)
		BASE MACHINE Continued... *- H120 NSL Loader* *- 260 Backhoe(with 12" Backhoe Bucket)* *- Installation Charge of $535 USD.* *- Three-point hitch WILL be included and arrive with the tractor in a box attached to the backhoe.*	
		OPERATORS MANUAL	
0409		English North American Operator's Manual and Decal Kit	In Base Price
0437		Spanish North American Operator's Manual and Decal Kit	Same Price
		REAR WHEELS WITH TIRES (TWO)	
5203		26X12-12 4 PR Rear R3 Turf Bias	Same Price
5204		26X12-12 4PR Rear R4 Ind Bias	In Base Price
		FRONT WHEELS WITH TIRES (TWO)	
6203		18X8.50-10 4 PR Front R3 Turf Bias	Same Price
6204		18X8.50-10 4PR Front R4 Ind Bias	In Base Price
		ATTACHMENTS FOR FIELD CONVERSION	
		Buckets:	
	BW14144	49 In. (1250mm) Loader Materials Bucket - Quik Change	723.80
	BW15896	49 in. (1250mm) Materials Bucket - Pin ON	671.00
	BW14145	53 In. (1350mm) Loader Materials Bucket - Quik Change	785.40
	BW14146	61 In. (1550mm) Loader Materials Bucket - Quik Change	823.90
	LVB24975	8 In. Backhoe Bucket (0.63 Cu. Ft.)	365.20
		Engine:	
	AM134805	Engine Block Heater Adapter	See Parts
	AR87167	Engine Coolant Heater (110 Volt) *Requires AM134805 Engine Block Heater Adapter.*	See Parts
	AM108146	Spark Arrester Screen for Muffler	See Parts
		Hitch:	
	LVU12858	iMatch Quick Hitch Bushings	See Parts
	LVB25255	iMatch Quick Hitch Category 1 *Bushings NOT included. Orderable through parts (LVU15507).*	315.70
	LVB25976	iMatch Quick Hitch Category 1 with adjustable top hook	350.90
		Lighting:	
	LVB25547	Auxiliary Rear Work Light Kit (1 Light) *Includes Wiring Harness. Not Compatible with Forward Lighting Kit (LVB25546). Not for use with Cab Tractors.*	62.70

(MY2013) 1025R TLB Sub-Compact Utility Tractor (18 PTO hp)

Continued

CODE	ATTACHMENT IDENTIFIER	DESCRIPTION	SUGGESTED LIST PRICE USD ($)
		ATTACHMENTS FOR FIELD CONVERSION Continued...	
	LVB25546	Forward Lighting Kit (2 Lights) *Requires Light Brush Guard Kit LBV25016.* *Cannot be used with Rear Work Lighting Kit (LVB25547) at the same time.*	95.70
	BLV10319	Warning Light Brush Guard Kit (Two Guards)	49.50
		Miscellaneous:	
	BW15476	Bucket Level Indicator	60.50
	LVB26110	Loader Mount Toolbox Kit	63.80
		Operator Environment:	
	TY25324	Weather Protection Umbrella	See Parts
		Order Zone: *For ordering and pricing information on the below product, Dealers can refer to the John Deere Order Zone site via the Pathways Home Page, then "Sales" then "John Deere Licensed Products" then "Order Zone GenII". Customers must contact your local JD Dealer.*	
	312012523	ABS Plastic Canopy	In Catalog
		Seats / Wheels / Tires:	
	TY15958	Tire Chains (Pair) for 26x12-12 Tires	See Parts
		Spanish North American Kit:	
	LVB26209	Spanish North American Owner's Manual and Decal Kit	119.90
		Weights:	
	BM17972	50 Lb. Cast Iron Wheel Weight (1)	128.40
	BM17976	50 Lb. Wheel Weight, Rear Plastic (1) with Mounting Hardware	66.34
	BM17973	72 Lb. Cast Iron Starter Wheel Weight (1)	181.90
	LVB25363	Front Weight Bracket Extension Kit (1023E, 1025R, 1026R, 2305, 2025R, 2320, 2520) *Includes Extension Bracket and Hardware (Including Rod and Spring Pins) to hold up to seven Quik-Tatch Weights.*	210.10
	BM18101	Mounting Hardware (1) for Attaching 72 Lb. Starter Weight and (2) 50 Lb. Cast Iron Weights on 26 In. Tire	28.89
	BM18089	Mounting Hardware (1) for Attaching 72 Lb. Starter Weight on 26x12-12 Tire	21.40
	BM17977	Mounting Hardware (1) for Attaching Two 50 lb. Weights to 23 In., 24 In. or 26 In. Tires	20.33
	R66949	Quik-Tatch Weight, 42 Lb. *Requires (1)M128726 Rod, and (2)A15147 Spring Clips.*	62.06
		Wheels and Tires Front:	
	LVB25848	Two Steel Wheels with 18L-18.5-10 In. 4PR Industrial (R4) Front Tires	311.30
	LVB25850	Two Steel Wheels with 18L-8.5-10 In. 4PR Turf (R3) Front Tires	295.90
		Wheels and Tires Rear:	
	LVB25849	Two Steel Wheels with 26x12.00-12 In. 4PR (R3) Turf Tires	657.80

(MY2013) 1025R TLB Sub-Compact Utility Tractor (18 PTO hp)

Continued

CODE	ATTACHMENT IDENTIFIER	DESCRIPTION	SUGGESTED LIST PRICE USD ($)
		ATTACHMENTS FOR FIELD CONVERSION Continued...	
	LVB25847	Two Steel Wheels with 26x12.00-12 In. 4PR (R4) Rear Tires	677.60

EXTENDED WARRANTY - RESIDENTIAL OWNERS/USE

Visit http://www.JohnDeere.com/ServicePlans for more information on John Deere Service Contracts. May not be Available in Parts of the U.S., Not Available in Canada. Price may vary due to driving distance and/or time from machine to dealership location.

1023E Tractor

Equipment for Base Machine

ENGINE:
Yanmar 3 Cylinder Liquid Cooled Diesel Engine
Interim Tier IV EPA Emmissions Certified
Engine HP 22.4 (16.5 kW), PS PTO HP 15.3 (11.4 kW)
Rated Speed 3200 RPM
Indirect Fuel Injection
Auto Bleed Fuel System
Glow Plug Cold Starting Aid
Anti-Freeze
Dry Type Air Cleaner With Safety Element
Fully Enclosed Engine and Muffler With Horizontal Exhaust
5.6 Gallon Fuel Tank Capacity (21.2 L)
Hand Throttle
Key Engine Shut Off
TRANSMISSION:
Hydrostatic Transmission: Infinitely Variable - 2 Speed Transaxle
Twin Touch Pedals and Direction Control
Differential Lock
FRONT/REAR AXLE:
Flanged Rear Axle
Spur Gear Final Drive
4WD
STEERING AND BRAKES:
Hydrostatic Power Steering
Wheel Brakes
Park Brake
Wet Disk Brakes
HYDRAULICS:
Open Center Hydraulic System
Hydraulic Pump - Total Flow 6.3 GPM (24 L/min) with Filter
Working Pressure (2000 PSI)
Dual Mid SCV Standard
PTO:
Hydrostatic Model:
Mid PTO Standard Equipment
Independent Mid and Rear PTO
540-RPM Rear PTO
Hydraulic PTO Clutch
PTO Brake
Separate or Simultaneous Operation of Mid and Rear PTO
Flip Up PTO Shield
ROCKSHAFT, 3-PT. HITCH, AND HITCH PLATE:
Rockshaft
Limited Category 1, 3-Pt. Hitch
Rate of Drop/Stop Valve
Hitch Plate
INSTRUMENTATION:
Fuel Gauge
Tachometer/Hour Meter
Oil Pressure Indicator Light
Coolant Temperature Light
Alternator Indicator Light
Flashing Warning Light Indicator
ELECTRICAL:
12-Volt Electrical System
Wet Battery With 500 Cold Cranking Amps
40 Amp Alternator
Key Ignition Starter With Neutral Start Switch
LIGHTS:
Two Front Halogen Head Lights
Two Flashing Warning Lights
OPERATOR PROTECTIVE STRUCTURE:
Folding ROPS (Roll-Over Protective Structure)
** Meets SAE J2194 and OSHA 1928 ROPS Certification Standards
Seat Belt
Operator Presence System
MISCELLANEOUS:
SMV Emblem
Front Weight Bracket
Tilt-Up Hood
Cupholder - Left Console
Mower Deck Height Adjustment
BASE MACHINE (4WD):
Engage on the go 4WD
Two - Steel Wheels With 26x12-12 4PR (R4) Rear Tires
Two - Steel Wheels With 18x8.50-10 4PR (R4) Front Tires
Interim Tier IV EPA Emmissions Certified Engine HP 22.4 (16.5 kW), PS PTO HP 15.3 (11.4 kW) Rated Speed 3200 RPM

CODE	ATTACHMENT IDENTIFIER	DESCRIPTION	SUGGESTED LIST PRICE USD ($)

Select One Code From Each Required Category

BASE MACHINE

F.O.B. Grovetown, Georgia

0250LV	1023E Tractor	11,296.00

WHEELS WITH TIRES (TWO)

4300	18X8.50-10 4 PR Front R3 Turf Tire 26X12-12 4 PR Rear R3 Turf Tire	Same Price
4400	18X8.50-10 4PR Front R4 Ind Bias 26X12-12 4PR Rear R4 Ind Bias	In Base Price

ATTACHMENTS - ORDER AS DESIRED

Spanish North American Kit:

9800	Spanish North American Operator's Manual and Decal Kit	No Charge

1023E Tractor
Continued

CODE	ATTACHMENT IDENTIFIER	DESCRIPTION	SUGGESTED LIST PRICE USD ($)
		ATTACHMENTS FOR FIELD CONVERSION	
		Engine:	
	MIA881629	Engine Block Heater Adapter	See Parts
	AR87167	Engine Coolant Heater (110 Volt) *Requires MIA881629 Engine Block Heater Adapter and 57M9425 P-clamp.*	See Parts
	AM108146	Spark Arrester Screen for Muffler	See Parts
		Hitch:	
	LVU12858	iMatch Quick Hitch Bushings	See Parts
	LVB25255	iMatch Quick Hitch Category 1 *Bushings NOT included. Orderable through parts (LVU15507).*	315.70
	LVB25976	iMatch Quick Hitch Category 1 with adjustable top hook	350.90
		Hood Guards:	
	BW15901	Deluxe Hood Guard (1023E, 1025R & 1026R Tractors) *Standard on H120 Loaders.*	226.60
	BW15900	Hood Guard - (1023E, 1025R & 1026R Tractors) *Standard on D120 Loaders.*	203.57
		Hydraulics:	
	LVB25956	Power Beyond Kit *Includes Rear Mounted Hydraulic Couplers and Hose.*	169.40
	LVB25837	Rear Hydraulic Kit *Not compatible with LVB25956 (Power Beyond Kit) or LVB25838 (Third SCV Kit).*	298.10
	LVB25838	Third Selective Control Valve Kit *Not compatible with LVB25956 (Power Beyond Kit).*	660.00
		Lighting:	
	LVB25547	Auxiliary Rear Work Light Kit (1 Light) *Includes Wiring Harness. Not Compatible with Forward Lighting Kit (LVB25546). Not for use with Cab Tractors.*	62.70
	LVB25546	Forward Lighting Kit (2 Lights) *Requires Light Brush Guard Kit LBV25016 and Lighting Kit Harness LVB26026. Can be used with Rear Work Lighting Kit (LVB25547) at the same time.*	95.70
	LVB26026	Rear Work Light Harness Kit *Required to use with Rear Work Light LVB25547.*	22.00
	LVB25016	Warning Light Brush Guard Kit (Two Guards)	49.50
		Miscellaneous:	
	LVB26110	Loader Mount Toolbox Kit	63.80
		Operator Environment:	
	TY25324	Weather Protection Umbrella	See Parts

1023E Tractor
Continued

CODE	ATTACHMENT IDENTIFIER	DESCRIPTION	SUGGESTED LIST PRICE USD ($)
		ATTACHMENTS FOR FIELD CONVERSION Continued...	
		Order Zone: *For ordering and pricing information on the below product, Dealers can refer to the John Deere Order Zone site via the Pathways Home Page, then "Sales" then "John Deere Licensed Products" then "Order Zone GenII". Customers must contact your local JD Dealer.*	
	720969235	3-Point Hitch Tractor Receiver Hitch	In Catalog
	312012523	ABS Plastic Canopy	In Catalog
		Seats / Wheels / Tires:	
	TY15958	Tire Chains (Pair) for 26x12-12 Tires	See Parts
		Spanish North American Kit:	
	LVB26209	Spanish North American Owner's Manual and Decal Kit	119.90
		Weights:	
	BM17972	50 Lb. Cast Iron Wheel Weight (1)	128.40
	BM17976	50 Lb. Wheel Weight, Rear Plastic (1) with Mounting Hardware	66.34
	BM17973	72 Lb. Cast Iron Starter Wheel Weight (1)	181.90
	LVB25363	Front Weight Bracket Extension Kit (1023E, 1025R, 1026R, 2305, 2025R, 2320, 2520)	210.10
	BM18101	Mounting Hardware (1) for Attaching 72 Lb. Starter Weight and (2) 50 Lb. Cast Iron Weights on 26 In. Tire	28.89
	BM18089	Mounting Hardware (1) for Attaching 72 Lb. Starter Weight on 26x12-12 Tire	21.40
	BM17977	Mounting Hardware (1) for Attaching Two 50 lb. Weights to 23 In., 24 In. or 26 In. Tires	20.33
	R66949	Quik-Tatch Weight, 42 Lb. *Requires (1)M128726 Rod, and (2)A15147 Spring Clips.*	62.06
		Wheels and Tires Front:	
	LVB25848	Two Steel Wheels with 18L-18.5-10 In. 4PR Industrial (R4) Front Tires	311.30
	LVB25850	Two Steel Wheels with 18L-8.5-10 In. 4PR Turf (R3) Front Tires	295.90
		Wheels and Tires Rear:	
	LVB25849	Two Steel Wheels with 26x12.00-12 In. 4PR (R3) Turf Tires	657.80
	LVB25847	Two Steel Wheels with 26x12.00-12 In. 4PR (R4) Rear Tires	677.60

EXTENDED WARRANTY - RESIDENTIAL OWNERS/USE

Visit http://www.JohnDeere.com/ServicePlans for more information on John Deere Service Contracts. May not be Available in Parts of the U.S., Not Available in Canada. Price may vary due to driving distance and/or time from machine to dealership location.

(MY2013) 2025R Compact Utility Tractor (18 PTO hp)

Equipment for Base Machine

ENGINE:
Yanmar 3 Cylinder Liquid Cooled Diesel Engine
Tier IV EPA Emmissions Certified
Engine HP 24.2 (17.8 kW)**
PTO HP 18.0 (13.4 kW)
Rated Speed 3000 RPM
**Manufacturer's Estimate of Power (ISO) per 97/68/EC
68 Cu. In. Displacement (1.115 L)
Indirect Fuel Injection
Auto Bleed Fuel System
Glow Plug Cold Starting Aid
Anti-Freeze
Dry Type Air Cleaner With Safety Element
Fully Enclosed Engine and Muffler With Horizontal Exhaust
6.1 Gallon Fuel Tank Capacity (23.0 L)
Hand Throttle
Key Engine Shut Off

TRANSMISSION:
Hydrostatic Transmission: Infinitely Variable - 2 Speed Transaxle
2-Pedal Foot Operated Speed and Direction Control
Differential Lock

FRONT/REAR AXLE:
Flanged Rear Axle
Spur Gear Final Drive
4WD

STEERING AND BRAKES:
Hydrostatic Power Steering
Individual Wheel Brakes
Park Brake
Wet Disk Brakes

HYDRAULICS:
Open Center Hydraulic System
Dual Gear Pump - Maximum Total Flow 5.6 GPM (21.2 LPM)
Steering Pump 2.2 GPM (8.5 LPM)
Implement Pump 3.4 GPM (12.7 LPM)
Dual Mid-SCV Standard

PTO:
Mid PTO Standard Equipment
Independent Mid and Rear PTO
Mid PTO Brake
Rear PTO Brake
Separate or Simultaneous Operation of Mid and Rear PTO
540-RPM Rear PTO
Hydraulic PTO Clutch

ROCKSHAFT, 3-PT. HITCH, AND DRAWBAR:
Rockshaft
Category 1, 3-Pt. Hitch With Position Control
Rate of Drop/Stop Valve
Adjustable Drawbar

INSTRUMENTATION:
Electric Fuel Gauge
Tachometer/Hour Meter
Oil Pressure Indicator Light
Coolant Temperature Light
Alternator Indicator Light
PTO Engagement Light
Park Brake Light
Flashing Warning Light Indicator

ELECTRICAL:
12-Volt Electrical System
Wet Battery With 500 Cold Cranking Amps
20 Amp Alternator
Key Ignition Starter With Neutral Start Switch

LIGHTS:
Two Front Halogen Head Lights
Two Flashing Warning Lights
**Turn Signal Indication per Current ASAE Lighting Standard

OPERATOR PROTECTIVE STRUCTURE:
Folding ROPS (Roll-Over Protective Structure
**Meets ASAE/SAE/OSHA Standard
Deluxe Cushion Seat With Seat Belt
Isolated Foot Rest
Operator Presence System

MISCELLANEOUS:
SMV Emblem
Front Weight Bracket
One-piece Hood

BASE MACHINE (4WD):
Engage on the go 4WD
Anti-Wrapping Guard for 4WD Drive Shaft
Two - Steel Wheels With 31X13.5-15 4PR (R3) Rear Tires
Two - Steel Wheels With 23X8.5-12 4PR (R3) Front Tires

CODE	ATTACHMENT IDENTIFIER	DESCRIPTION	SUGGESTED LIST PRICE USD ($)

Select One Code From Each Required Category

BASE MACHINE

F.O.B. Grovetown, Georgia

1510LV	(MY2013) 2025R Compact Utility Tractor (18 PTO hp)	14,345.00

OPERATORS MANUAL

0409	English North American Operator's Manual and Decal Kit	In Base Price
0437	Spanish North American Operator's Manual and Decal Kit	Same Price
0450	Austrailan Operator's Manual and Decal Kit	Same Price

(MY2013) 2025R Compact Utility Tractor (18 PTO hp)
Continued

CODE	ATTACHMENT IDENTIFIER	DESCRIPTION	SUGGESTED LIST PRICE USD ($)
		OPERATORS MANUAL Continued...	
0413		French Canadian Operator's Manual and Decal Kit	Same Price
		REAR WHEELS WITH TIRES (TWO)	
		All Tires are of Bias Ply Construction	
5205		31X13.5-15 4PR Rear R3 Turf Bias	In Base Price
5206		12-16.5 6PR Rear R4 Ind. Bias	-100.00
		FRONT WHEELS WITH TIRES (TWO)	
		All Tires are of Bias Ply Construction	
6205		23X8.5-12 4PR Front R3 Turf Bias	In Base Price
6206		23X8.50-12 6PR Front R4 Ind. Bias	88.00
		ATTACHMENTS FOR FIELD CONVERSION	
		Engine:	
	AM134805	Engine Block Heater Adapter	See Parts
	AR87167	Engine Coolant Heater (110 Volt) *Requires AM134805 Engine Block Heater Adapter.*	See Parts
	AM108146	Spark Arrester Screen for Muffler	See Parts
		Fenders:	
	LVB25652	Rear FenderExtension Kit	165.00
		Hitch:	
	LVU12858	iMatch Quick Hitch Bushings	See Parts
	LVB25255	iMatch Quick Hitch Category 1 *Bushings NOT included. Orderable through parts (LVU15507).*	315.70
	LVB25976	iMatch Quick Hitch Category 1 with adjustable top hook	350.90
		Hood Guards:	
	BW15217	Hood Guard (2025R, 2210, 2305, 2320)	242.00
		Hydraulics:	
	LVB25822	Loader/Mower Mechanical Diverter Valve Kit (2305, 2025R, 2320) *Diverter is not compatible with Mechanical Mower Lift system.*	409.81
	BLV10381	Power Beyond Kit *Not Compatible with Third SCV kit BLV10382/LVB26166* *Includes Rear Mounted Hydraulic Couplers and Hose for Use with Backhoe on 2025R and 2032R Tractors* *Equipped with Dual SCV.*	455.40
	LVB25606	Rear Hydraulic Outlet Kit *Routes Dual Mid SCVs to Rear of Tractor*	308.00
	BLV10382	Third Selective Control Valve Kit Without Detent *Not Compatible with but REQUIRES Power Beyond Kit BLV10381/LVB25603. See instruction sheet for details.*	836.00

(MY2013) 2025R Compact Utility Tractor (18 PTO hp)
Continued

CODE	ATTACHMENT IDENTIFIER	DESCRIPTION	SUGGESTED LIST PRICE USD ($)
		ATTACHMENTS FOR FIELD CONVERSION Continued...	
		Lighting:	
	LVB25547	Auxiliary Rear Work Light Kit (1 Light) *Includes Wiring Harness. Not Compatible with Forward Lighting Kit (LVB25546). Not for use with Cab Tractors.*	62.70
	LVB25546	Forward Lighting Kit (2 Lights) *Requires Light Brush Guard Kit, LVB25016. Not Compatible with Rear Work Lighting Kit (LVB25547).*	95.70
	BLV10319	Warning Light Brush Guard Kit (Two Guards)	49.50
		Miscellaneous:	
	LVB19942	High Capacity Alternator Kit (35 amp)	525.80
	RE19428	Safety Chain Support Kit	See Parts
		Operator Environment:	
	TY25324	Weather Protection Umbrella	See Parts
		Order Zone:	
	720969235	3-Point Hitch Tractor Receiver Hitch	In Catalog
	312012523	ABS Plastic Canopy	In Catalog
	LP95223	Medium Seat Cover	In Catalog
		Spanish North American Kit:	
	LVB25992	Spanish North American Operator's Manual and Decal Kit	97.90
		Transmission:	
	AR94493	Transmission Oil Heater *Serial #(H205509 -)*	See Parts
		Weights:	
	BM17987	Attaching Hardware for Rear Wheel Weight, 60 Lb.	16.50
	LVB25363	Front Weight Bracket Extension Kit (1023E, 1025R, 1026R, 2305, 2025R, 2320, 2520)	210.10
	R66949	Quik-Tatch Weight, 42 Lb. *Requires (1)M128726 Rod, and (4)A15147 Spring Clips.*	62.06
	BM17965	Rear Wheel Weight, 60 Lb. *Starter and Additional Weight for 15, 16, 16.5 and 17.5-Inch Wheel. Requires BM17987.*	140.80
		Wheels and Tires Front:	
	LVB24806	1 position steel wheels with 23x8.5-12 4PR (R3) Front tires	388.30
	LVB24804	2 Position Steel Wheels with 23x8.50-12 6PR (R4) Front Tires	509.30
		Wheels and Tires Rear:	
	LVB24803	2 position steel wheels with 12-16.5 6PR (R4) Rear tires	897.60
	LVB24805	2 position steel wheels with 31x13.5-15 4PR (R3) Rear Tires	849.20

EXTENDED WARRANTY - RESIDENTIAL OWNERS/USE

(MY2013) 2025R Compact Utility Tractor (18 PTO hp)

Continued

CODE	ATTACHMENT IDENTIFIER	DESCRIPTION	SUGGESTED LIST PRICE USD ($)
		EXTENDED WARRANTY - RESIDENTIAL OWNERS/USE	
		Continued...	
		Visit http://www.JohnDeere.com/ServicePlans for more information on John Deere Service Contracts. May not be Available in Parts of the U.S., Not Available in Canada. Price may vary due to driving distance and/or time from machine to dealership location.	

(MY2013) 2032R Compact Utility Tractor (24 PTO hp)

Equipment for Base Machine

ENGINE:
Yanmar 3 Cylinder Liquid Cooled Diesel Engine*
Interim Tier IV EPA Emmissions Certified
Engine HP 31.7 (23.3 kW)**
PTO HP 23.5 (17.5 kW)
Rated Speed 2500 RPM
**Manufacturer's Estimate of Power (ISO) per 97/68/EC
100.2 Cu. In. Displacement (1.642 L)
Direct Fuel Injection
Auto Bleed Fuel System
Fully Enclosed Engine and Muffler with Horizontal Exhaust
7.1 Gallon Fuel Tank Capacity (27 L)
Hand Throttle
Air-Heater Cold Starting Aid
Anti-Freeze
Dry Type Air Cleaner with Safety Element
Key Engine Shut Off

TRANSMISSION:
Hydrostatic Transmission
Infinitely Variable - 2 Speed Transaxle
2-Pedal Foot Operated Speed and Direction Control
Cruise Control
Transmission Oil Cooler
Differential Lock

FRONT/REAR AXLE:
Flanged Rear Axle
Spur Gear Final Drive
4WD

STEERING AND BRAKES:
Hydrostatic Power Steering
Individual Wheel Brakes
Park Brake
Wet Disk Brakes

HYDRAULICS:
Open Center Hydraulic System
Dual Gear Pumps
Hydraulic Pump - Total Flow 10.5 GPM (39.6 LPM)
Steering Pump 5.5 GPM (20.8 LPM)
Implement Pump 5 GPM (18.8 LPM) with Filter
Dual Mid-SCV Standard

PTO:
Mid PTO Standard Equipment
Independent Mid and Rear PTO
540-RPM Rear PTO
Hydraulic PTO Clutch
Mid PTO Brake
Rear PTO Brake
Separate or Simultaneous Operation of Mid and Rear PTO
Flip Up Rear PTO Shield

ROCKSHAFT, 3-PT. HITCH, AND DRAWBAR:
Rockshaft
Category 1, 3-Pt. Hitch with Position Control
Rate of Drop/Stop Valve
Adjustable Drawbar

INSTRUMENTATION:
Electric Fuel Gauge
Tachometer/Hour Meter
Oil Pressure Indicator Light
Coolant Temperature Light
Alternator Indicator Light
PTO Engagement Light
Park Brake Light
Flashing Warning Light Indicator

ELECTRICAL:
12-Volt Outlet
12-Volt Electrical System
Wet Battery with 500 Cold Cranking Amps
40 Amp Alternator
Key Ignition Starter with Neutral Start Switch

LIGHTS:
Two Front Halogen Head Lights
Two Flashing Warning Lights
**Turn Signal Indication per Current ASAE Lighting Standard

OPERATOR PROTECTIVE STRUCTURE:
Folding ROPS (Roll-Over-Protective Structure)
**Meets ASAE/SAE/OSHA Standards
Deluxe Cushion Seat with Seat Belt
Isolated Foot Rest
Operator Presence System

MISCELLANEOUS:
SMV Emblem
Front Weight Bracket
Tilt-Up Hood

BASE MACHINE (4WD):
Engage on the go 4WD
Anti-Wrapping Guard for 4WD Drive Shaft
Two - Steel Wheels with 14-17.5 6PR (R4) Rear Tires
Two - Steel Wheels with 23x8.5-12 6PR (R4) Front Tires

CODE	ATTACHMENT IDENTIFIER	DESCRIPTION	SUGGESTED LIST PRICE USD ($)

Select One Code From Each Required Category

BASE MACHINE

F.O.B. Grovetown, Georgia

1530LV	(MY2013) 2032R Compact Utility Tractor (24 PTO hp)	18,595.00

OPERATORS MANUAL

0409	English North American Operator's Manual and Decal Kit	In Base Price
0437	Spanish North American Operator's Manual and Decal Kit	Same Price
0450	Austrailan Operator's Manual and Decal Kit	Same Price

(MY2013) 2032R Compact Utility Tractor (24 PTO hp)

Continued

CODE	ATTACHMENT IDENTIFIER	DESCRIPTION	SUGGESTED LIST PRICE USD ($)
		OPERATORS MANUAL Continued...	
0413		French Canadian Operator's Manual and Decal Kit	Same Price
		REAR WHEELS WITH TIRES (TWO)	
		All Tires are of Bias Ply Construction	
5207		36X14-15 4 PR Rear R3 Turf Bias	-24.00
5208		14-17.5 6PR Rear R4 Ind. Bias	In Base Price
		FRONT WHEELS WITH TIRES (TWO)	
		All Tires are of Bias Ply Construction	
6206		23X8.50-12 6PR Front R4 Ind. Bias	In Base Price
6207		24x8.5-14 4 PR Front R3 Turf Bias	Same Price
		ATTACHMENTS FOR FIELD CONVERSION	
		Engine:	
	AR87167	Engine Coolant Heater (110 Volt)	See Parts
	AM108146	Spark Arrester Screen for Muffler	See Parts
		Fenders:	
	LVB25652	Rear FenderExtension Kit	165.00
		Hitch:	
	LVU12858	iMatch Quick Hitch Bushings	See Parts
	LVB25255	iMatch Quick Hitch Category 1 *Bushings NOT included. Orderable through parts (LVU15507).*	315.70
	LVB25976	iMatch Quick Hitch Category 1 with adjustable top hook	350.90
		Hood Guards:	
	BW15634	Hood Guard (2032R, 2520, 2720)	292.60
		Hydraulics:	
	LVB25823	Loader/Mower Mechanical Diverter Valve Kit (2032R, 2520, 2720) *Diverter is not compatible with Mechanical Mower Lift system.*	540.10
	BLV10381	Power Beyond Kit *Not Compatible with Third SCV kit BLV10382/LVB26166* *Includes Rear Mounted Hydraulic Couplers and Hose for Use with Backhoe on 2025R and 2032R Tractors* *Equipped with Dual SCV.*	455.40
	LVB25606	Rear Hydraulic Outlet Kit *Routes Dual Mid SCVs to Rear of Tractor*	308.00
	BLV10382	Third Selective Control Valve Kit Without Detent *Not Compatible with but REQUIRES Power Beyond Kit BLV10381/LVB25603. See instruction sheet for details.*	836.00

(MY2013) 2032R Compact Utility Tractor (24 PTO hp)
Continued

CODE	ATTACHMENT IDENTIFIER	DESCRIPTION	SUGGESTED LIST PRICE USD ($)
		ATTACHMENTS FOR FIELD CONVERSION Continued...	
		Lighting:	
	LVB25547	Auxiliary Rear Work Light Kit (1 Light) *Includes Wiring Harness. Not Compatible with Forward Lighting Kit (LVB25546). Not for use with Cab Tractors.*	62.70
	LVB25546	Forward Lighting Kit (2 Lights) *Requires Light Brush Guard Kit, LVB25016. Not Compatible with Rear Work Lighting Kit (LVB25547).*	95.70
	BLV10319	Warning Light Brush Guard Kit (Two Guards)	49.50
		Miscellaneous:	
	RE19428	Safety Chain Support Kit	See Parts
		Operator Environment:	
	TY25324	Weather Protection Umbrella	See Parts
		Order Zone:	
	720969235	3-Point Hitch Tractor Receiver Hitch	In Catalog
	312012523	ABS Plastic Canopy	In Catalog
	LP95223	Medium Seat Cover	In Catalog
		Spanish North American Kit:	
	LVB25994	Spanish North American Operator's Manual and Decal Kit	97.90
		Transmission:	
	AR94493	Transmission Oil Heater *Requires AR95434 Cord Set, R34557 Clamp and (2) R44302, Self Locking Straps.*	See Parts
		Weights:	
	BM17987	Attaching Hardware for Rear Wheel Weight, 60 Lb.	16.50
	LVB25363	Front Weight Bracket Extension Kit (1023E, 1025R, 1026R, 2305, 2025R, 2320, 2520) *Includes Extension Bracket and Hardware (Including Rod and Spring Pins) to hold up to Twelve Quik-Tatch Weights.*	210.10
	H148916	Front Weight Retainer Shaft	See Parts
	R66949	Quik-Tatch Weight, 42 Lb. *Requires (1) H148916 Rod and (2) AR60372 Spring Clips.*	62.06
	BM17965	Rear Wheel Weight, 60 Lb. *Starter and Additional Weight for 15, 16, 16.5 and 17.5-Inch Wheel. Requires BM17987.*	140.80
	AR60372	Spring Locking Pin	See Parts
		Wheels and Tires Front:	
	LVB24804	2 Position Steel Wheels with 23x8.50-12 6PR (R4) Front Tires	509.30
	LVB25556	2 Position Steel Wheels with 24x8.5-14 4PR (R3) Front Tires	539.00
		Wheels and Tires Rear:	
	LVB25557	2 Position Steel Wheels with 14-17.5 6PR (R4) Rear Tires	1,225.40

(MY2013) 2032R Compact Utility Tractor (24 PTO hp)

Continued

CODE	ATTACHMENT IDENTIFIER	DESCRIPTION	SUGGESTED LIST PRICE USD ($)
		ATTACHMENTS FOR FIELD CONVERSION Continued...	
	LVB25555	2 Position Steel Wheels with 36x14.00-15 4PR (R3) Rear Tires	1,194.60

EXTENDED WARRANTY - RESIDENTIAL OWNERS/USE

Visit http://www.JohnDeere.com/ServicePlans for more information on John Deere Service Contracts. May not be Available in Parts of the U.S., Not Available in Canada. Price may vary due to driving distance and/or time from machine to dealership location.

3032E Compact Utility Tractor (25 PTO hp)

Equipment for Base Machine

ENGINE:
Yanmar Liquid Cooled
Diesel Engine
Interim Tier IV EPA Emmissions
Certified
Engine HP 31.4 (23.1 kW)
PTO HP 25.0 (18.6 kW) HST
Rated Speed 2500 RPM
**Manufacturers Estimate of
Power (ISO) per 97/68 EC

TRANSMISSION:
4-Wheel Drive
HST Transmission
2 Ranges
Differential Lock (Control
Integrated with Brake Pedal)

HYDRAULICS:
9.3 GPM (35.2 LPM) Total Flow
5.3 GPM (20.1 LPM) Implement
Pump
4.0 GPM (15.1 LPM) Steering Pump

PTO:
Independent 540 RPM Rear PTO
Electronically Engaged Wet
Clutch

ELECTRICAL:
12-Volt System
40 Amp Alternator
Key Ignition Starter with
Pre-Heat While Cranking
Maintenance Free Battery with
500 Cold Cranking Amps

OPERATOR PROTECTIVE STRUCTURE:
Adjustable Vinyl Seat
without suspension
Fixed ROPS (Roll-Over
Protective Structure)
Meets ASAE S478 and OSHA
1928.51
ROPS Certification Standard
Retractable Seat Belt
Operator Presence with
Safety Interlock System

BASE MACHINE (4WD):
7.00-14 6PR (R1) Agricultural
Front Tires
11.2-24 6PR (R1) Agricultural
Rear Tires

CODE	ATTACHMENT IDENTIFIER	DESCRIPTION	SUGGESTED LIST PRICE USD ($)

Select One Code From Each Required Category

BASE MACHINE

F.O.B. Grovetown, Georgia

1471LV	3032E Compact Utility Tractor (25 PTO hp)	15,539.00

TRANSMISSION

2025	HST Transmission	In Base Price

WHEELS WITH TIRES (TWO)

4515	25x8.50-14 6PR Front R4 Industrial 15-19.5 4PR Rear R4 Industrial	227.00
4520	27x8.50-15 6PR Front R3 Turf 41x14.0-20 4PR Rear R3 Turf	227.00
4525	7-14 6PR Front R1 Agricultural 11.2-24 6PR Rear R1 Agricultural	In Base Price

ATTACHMENTS - ORDER AS DESIRED

9001	Rear Drawbar	144.00
9500	305 Loader Factory Installation *Code 9500 will generate a separate order for the loader with the following codes: 2561P, 1000, 2000, 4095, 5000, 8122. Loader pricing is not reflected in the code 9500 list price, see loader price pages. Loader will be invoiced separately.*	190.00

*Three-Point Hitch Ballast is Required for Stability.
Please Review the "Tractor Ballast Requirements" in
the Sales Manual for Proper Ballasting.*

3032E Compact Utility Tractor (25 PTO hp)

Continued

CODE	ATTACHMENT IDENTIFIER	DESCRIPTION	SUGGESTED LIST PRICE USD ($)
		ATTACHMENTS - ORDER AS DESIRED Continued...	
		Spanish North American Kit:	
9800		Spanish North American Owners Manual and Decal Kit	No Charge
		ATTACHMENTS FOR FIELD CONVERSION	
		Ballast Box:	
	BW15073	Ballast Box	269.50
	BW15074	Ballast Box Extension	128.70
		Engine:	
	AR87167	Engine Coolant Heater (110 Volt)	See Parts
	LVA13457	Spark Arrester Screen	See Parts
		Hitch:	
	LVB25811	Rear Drawbar Kit	130.90
	LVU12858	iMatch Quick Hitch Bushings	See Parts
	LVB25255	iMatch Quick Hitch Category 1 *Bushings NOT included. Orderable through parts (LVU15507).*	315.70
	LVB25976	iMatch Quick Hitch Category 1 with adjustable top hook	350.90
		Hood Guards:	
	LVB25998	Hood Guard *Hood Guard is Standard with Loader.*	246.40
		Hydraulics:	
	LVB25743	Rear Hydraulic Kit	852.50
		Lighting:	
	LVB25547	Auxiliary Rear Work Light Kit (1 Light) *Includes Wiring Harness. Not Compatible with Forward Lighting Kit (LVB25546). Not for use with Cab Tractors.*	62.70
	LVB25546	Forward Lighting Kit (2 Lights) *Requires Light Brush Guard Kit, LVB25016. Not Compatible with Rear Work Lighting Kit (LVB25547).*	95.70
	LVB25016	Warning Light Brush Guard Kit (Two Guards)	49.50
		Miscellaneous:	
	LVB25764	Cruise Control Kit	235.40
	RE19428	Safety Chain Support Kit	See Parts
	TY4453	Tire Chains *For use with 11.2-24 (R1) and 15-19.5 (R4) Rear Tires*	See Parts
	TY15651	Tire Chains *For use with 25x8.50-14 (R4) Front Tires*	See Parts
	TY15653	Tire Chains *For use with 7-14 (R1) Front Tires*	See Parts

3032E Compact Utility Tractor (25 PTO hp)

Continued

CODE	ATTACHMENT IDENTIFIER	DESCRIPTION	SUGGESTED LIST PRICE USD ($)
		ATTACHMENTS FOR FIELD CONVERSION Continued...	
	TY4457	Tire Chains *For use with 41x14.0-20 (R3) Rear Tires*	See Parts
	TY15649	Tire Chains *For use with 27x8.50-15 (R3) Front Tires*	See Parts
		Operator Environment:	
	LVB25334	Canopy - Standard *Requires LVB25332 Canopy Mounting Bracket and Hardware Kit.*	572.00
	LVB25332	Canopy Mounting Bracket and Hardware Kit	103.40
	TY25324	Weather Protection Umbrella	See Parts
		Spanish North American Kit:	
	LVB26105	Spanish North American Operators Manual and Decal Kit	77.00
		Transmission:	
	AR94493	Transmission Oil Heater *Requires AR95434 Cord Set, R34557 Clamp and (2) R44302, Self Locking Straps.*	See Parts
		Weights:	
	BM19937	Attaching Hardware for Additional Rear Wheel Weight, 55 Lb.	9.90
	BM19936	Attaching Hardware for Rear Wheel Starter Weight, 45 Lb.	11.00
	BM19951	Attaching Hardware for Rear Wheel Weight	7.70
	BM19938	Attaching Hardware for Starter Rear Wheel Weight, 60 Lb. for 16 In. and 19.5 In. Wheel	9.90
	LVB24952	Front Weight Bracket Extension Kit *Includes Extension Bracket and all Hardware (Including Rod and Spring Pins) to Hold up tp Ten Front Quik-Tatch Weights.*	188.10
	R66949	Quik-Tatch Weight, 42 Lb. *Requires (1) LVB24952.*	62.06
	BM19780	Quik-Tatch Weight, 70 lb. *Requires (1) LVB24952.*	108.90
	BM17969	Rear Wheel Starter Weight, 45 Lb. *For use with 11.2-24 R1 Agricultural Rear Tires.*	140.80
	BM17968	Rear Wheel Weight, 55 Lb.	140.80
	BM17965	Rear Wheel Weight, 60 Lb. *For use with 41x14.00-20 R3 Turf Rear Tires and 15.00-19.5 R4 Industrial Rear Tires. Maximum three (3) Weights per Wheel.*	140.80
		Wheels and Tires Front:	
	LVB25672	Two 2 position Steel Wheel with 7X14 In. 6PR (R1) Front Tires	467.50
	LVB25674	Two 2 Position Steel Wheels with 25x8.50-14 In. 6PR (R4) Front Tires	550.00

3032E Compact Utility Tractor (25 PTO hp)

Continued

CODE	ATTACHMENT IDENTIFIER	DESCRIPTION	SUGGESTED LIST PRICE USD ($)
		ATTACHMENTS FOR FIELD CONVERSION Continued...	
	LVB25671	Two 2 Position Steel Wheels with 27x8.50-15 In. 6PR (R3) Front Tires	562.10
		Wheels and Tires Rear:	
	BLV10148	Two 1 Position Steel Wheels with 11.2-24 6PR R1 Ag Tires	1,331.00
	LVB24878	Two 1 Position Steel Wheels with 15-19.5 4PR Industrial Tires	1,536.70
	LVB24877	Two 1 Position Steel Wheels with 41x14.0-20 4PR R3 Turf Tires	1,524.60

EXTENDED WARRANTY - RESIDENTIAL OWNERS/USE

Visit http://www.JohnDeere.com/ServicePlans for more information on John Deere Service Contracts. May not be Available in Parts of the U.S., Not Available in Canada. Price may vary due to driving distance and/or time from machine to dealership location.

3038E Compact Utility Tractor (30 PTO hp)

Equipment for Base Machine

ENGINE:
Yanmar Liquid Cooled Diesel Engine
Interim Tier IV EPA Emmissions Certified
Engine HP 37.1 (27.3 kW)
PTO HP 30.0 (22.4 kW) HST
Rated Speed 2500 RPM
**Manufacturers Estimate of Power (ISO) per 97/68 EC

TRANSMISSION:
4-Wheel Drive
HST Transmission
2 Ranges
Differential Lock (Control Integrated with Brake Pedal)

HYDRAULICS:
9.3 GPM (35.2 LPM) Total Flow
5.3 GPM (20.1 LPM) Implement Pump
4.0 GPM (15.1 LPM) Steering Pump

PTO:
Independent 540 RPM Rear PTO
Electronically Engaged Wet Clutch
ELECTRICAL:
12-Volt System
40 Amp Alternator
Key Ignition Starter with Accessory and Pre-Heat Position
Maintenance Free Battery with 500 Cold Cranking Amps

OPERATOR PROTECTIVE STRUCTURE:
Adjustable Vinyl Seat without suspension
Fixed ROPS (Roll-Over Protective Structure)
Meets ASAE S478 and OSHA 1928.51 ROPS Certification Standard
Retractable Seat Belt
Operator Presence with Safety Interlock System

BASE MACHINE (4WD):
7.00-14 6PR (R1) Agricultural Front Tires
11.2-24 6PR (R1) Agricultural Rear Tires

CODE	ATTACHMENT IDENTIFIER	DESCRIPTION	SUGGESTED LIST PRICE USD ($)

Select One Code From Each Required Category

BASE MACHINE

F.O.B. Grovetown, Georgia

1481LV	3038E Compact Utility Tractor (30 PTO hp)	16,952.00

TRANSMISSION

2025	HST Transmission	In Base Price

WHEELS WITH TIRES (TWO)

4515	25x8.50-14 6PR Front R4 Industrial 15-19.5 4PR Rear R4 Industrial	227.00
4520	27x8.50-15 6PR Front R3 Turf 41x14.0-20 4PR Rear R3 Turf	227.00
4525	7-14 6PR Front R1 Agricultural 11.2-24 6PR Rear R1 Agricultural	In Base Price

ATTACHMENTS - ORDER AS DESIRED

9001	Rear Drawbar	144.00
9500	305 Loader Factory Installation *Code 9500 will generate a separate order for the loader with the following codes: 2561P, 1000, 2000, 4095, 5000, 8122. Loader pricing is not reflected in the code 9500 list price, see loader price pages. Loader will be invoiced separately.*	190.00

Three-Point Hitch Ballast is Required for Stability. Please Review the "Tractor Ballast Requirements" in the Sales Manual for Proper Ballasting.

3038E Compact Utility Tractor (30 PTO hp)

Continued

CODE	ATTACHMENT IDENTIFIER	DESCRIPTION	SUGGESTED LIST PRICE USD ($)
		ATTACHMENTS - ORDER AS DESIRED Continued...	
		Spanish North American Kit:	
9800		Spanish North American Owners Manual and Decal Kit	No Charge
		ATTACHMENTS FOR FIELD CONVERSION	
		Ballast Box:	
	BW15073	Ballast Box	269.50
	BW15074	Ballast Box Extension	128.70
		Engine:	
	AR87167	Engine Coolant Heater (110 Volt)	See Parts
	LVA13457	Spark Arrester Screen	See Parts
		Hitch:	
	LVB25811	Rear Drawbar Kit	130.90
	LVU12858	iMatch Quick Hitch Bushings	See Parts
	LVB25255	iMatch Quick Hitch Category 1 *Bushings NOT included. Orderable through parts (LVU15507).*	315.70
	LVB25976	iMatch Quick Hitch Category 1 with adjustable top hook	350.90
		Hood Guards:	
	LVB25998	Hood Guard *Hood Guard is Standard with Loader.*	246.40
		Hydraulics:	
	LVB25743	Rear Hydraulic Kit	852.50
		Lighting:	
	LVB25547	Auxiliary Rear Work Light Kit (1 Light) *Includes Wiring Harness. Not Compatible with Forward Lighting Kit (LVB25546). Not for use with Cab Tractors.*	62.70
	LVB25546	Forward Lighting Kit (2 Lights) *Requires Light Brush Guard Kit, LVB25016. Not Compatible with Rear Work Lighting Kit (LVB25547).*	95.70
	LVB25016	Warning Light Brush Guard Kit (Two Guards)	49.50
		Miscellaneous:	
	LVB25764	Cruise Control Kit	235.40
	RE19428	Safety Chain Support Kit	See Parts
	TY4453	Tire Chains *For use with 11.2-24 (R1) and 15-19.5 (R4) Rear Tires*	See Parts
	TY15651	Tire Chains *For use with 25x8.50-14 (R4) Front Tires*	See Parts
	TY15653	Tire Chains *For use with 7-14 (R1) Front Tires*	See Parts

3038E Compact Utility Tractor (30 PTO hp)

Continued

CODE	ATTACHMENT IDENTIFIER	DESCRIPTION	SUGGESTED LIST PRICE USD ($)
		ATTACHMENTS FOR FIELD CONVERSION Continued...	
	TY4457	Tire Chains *For use with 41x14.0-20 (R3) Rear Tires*	See Parts
	TY15649	Tire Chains *For use with 27x8.50-15 (R3) Front Tires*	See Parts
		Operator Environment:	
	LVB25334	Canopy - Standard *Requires LVB25332 Canopy Mounting Bracket and Hardware Kit.*	572.00
	LVB25332	Canopy Mounting Bracket and Hardware Kit	103.40
	TY25324	Weather Protection Umbrella	See Parts
		Spanish North American Kit:	
	LVB26105	Spanish North American Operators Manual and Decal Kit	77.00
		Transmission:	
	AR94493	Transmission Oil Heater *Requires AR95434 Cord Set, R34557 Clamp and (2) R44302, Self Locking Straps.*	See Parts
		Weights:	
	BM19937	Attaching Hardware for Additional Rear Wheel Weight, 55 Lb.	9.90
	BM19936	Attaching Hardware for Rear Wheel Starter Weight, 45 Lb.	11.00
	BM19951	Attaching Hardware for Rear Wheel Weight	7.70
	BM19938	Attaching Hardware for Starter Rear Wheel Weight, 60 Lb. for 16 In. and 19.5 In. Wheel	9.90
	LVB24952	Front Weight Bracket Extension Kit *Includes Extension Bracket and all Hardware (Including Rod and Spring Pins) to Hold up tp Ten Front Quik-Tatch Weights.*	188.10
	R66949	Quik-Tatch Weight, 42 Lb. *Requires (1) LVB24952.*	62.06
	BM19780	Quik-Tatch Weight, 70 lb. *Requires (1) LVB24952.*	108.90
	BM17969	Rear Wheel Starter Weight, 45 Lb. *For use with 11.2-24 R1 Agricultural Rear Tires.*	140.80
	BM17968	Rear Wheel Weight, 55 Lb.	140.80
	BM17965	Rear Wheel Weight, 60 Lb. *For use with 41x14.00-20 R3 Turf Rear Tires and 15.00-19.5 R4 Industrial Rear Tires. Maximum three (3) Weights per Wheel.*	140.80
		Wheels and Tires Front:	
	LVB25672	Two 2 position Steel Wheel with 7X14 In. 6PR (R1) Front Tires	467.50
	LVB25674	Two 2 Position Steel Wheels with 25x8.50-14 In. 6PR (R4) Front Tires	550.00

3038E Compact Utility Tractor (30 PTO hp)

Continued

CODE	ATTACHMENT IDENTIFIER	DESCRIPTION	SUGGESTED LIST PRICE USD ($)
		ATTACHMENTS FOR FIELD CONVERSION Continued...	
	LVB25671	Two 2 Position Steel Wheels with 27x8.50-15 In. 6PR (R3) Front Tires	562.10
		Wheels and Tires Rear:	
	BLV10148	Two 1 Position Steel Wheels with 11.2-24 6PR R1 Ag Tires	1,331.00
	LVB24878	Two 1 Position Steel Wheels with 15-19.5 4PR Industrial Tires	1,536.70
	LVB24877	Two 1 Position Steel Wheels with 41x14.0-20 4PR R3 Turf Tires	1,524.60

EXTENDED WARRANTY - RESIDENTIAL OWNERS/USE

Visit http://www.JohnDeere.com/ServicePlans for more information on John Deere Service Contracts. May not be Available in Parts of the U.S., Not Available in Canada. Price may vary due to driving distance and/or time from machine to dealership location.

3320 Compact Utility Tractor (25 - 26 PTO hp)

Equipment for Base Machine

ENGINE:
Yanmar Liquid Cooled Diesel Engine
Interim Tier IV EPA Emissions Certified
Engine HP 32.8 (24.1 kW)**
PTO HP 25.0 (18.6 kW) HST
PTO HP 25.5 (19.0 kW) PRT
Rated Speed 2600 RPM
**Manufatures Estimate of Power (ISO) per 97/68 EC

TRANSMISSION:
4-Wheel Drive
PRT Transmission (3320)
Differential Lock

HYDRAULICS:
Dual Mid Selective Control Valve with Joystick Control Lever, Float, Regenerative Function, and SCV and Regenerative Lockout

PTO:
Independent 540 RPM Rear PTO
Electronically Engaged with Mechanical Mid-Both-Rear Selector

ELECTRICAL:
12-Volt Electrical System
40 Amp Alternator
Key Ignition Starter with Accessory and Pre-Heat Position
Maintenance Free Battery with 500 Cold Cranking Amps
OPERATOR PROTECTIVE STRUCTURE:
Deluxe Adjustable Vinyl Seat with Retractable Seat Belt
Folding ROPS (Roll-Over Protective Structure) Meets SAE J2194 and OSHA 1928 ROPS Certification Standards
Isolated Foot Rest
ComfortGard Cab (Optional):
12 Volt Auxilary Power Outlet
Air Conditioning and Heater
Cell Phone Holder
Deluxe Fabric Covered Seat with Retractable Seat Belt
Armrests
Dual Forward Work Lights
Exclusive Raised Header Bar
Two Speed Front Windshield Wiper/Washer
Fully Isolated Cab
High Impact Polymer Fenders with Integrated Tail Lights
Radio Preparation (w/antenna, speakers, wiring, media player storage slot)
Molded Rubber Floormat
Operator Manual Holder
Rearview Mirror (Inside)
Monitor Mounting Bosses (2 sets)
Right Hand and Left Hand Console Storage
Right Hand Control Center
Sealed Quiet Cabin
Sun Visor
Swing-Out Rear Window w/removable rear plug for monitor or controller wiring harnesses
Tilt Steering
Two Front/Two Rear Roof Mounted Warning Lights
Operator Presence with Safety Interlock System

BASE MACHINE (4WD):
11.2-24 6PR (R1) Rear Tires
7-14 6PR (R1) Front Tires

CODE	ATTACHMENT IDENTIFIER	DESCRIPTION	SUGGESTED LIST PRICE USD ($)

Select One Code From Each Required Category

BASE MACHINE

F.O.B. Grovetown, Georgia

6803LV	3320 Compact Utility Tractor (25 - 26 PTO hp)	21,166.00

OPERATOR STATION

1505	Open Station with Standard Seat	In Base Price
1510	Cab with Standard Seat *Requires Option Codes 2025 (eHydro), 2500 (Less Mid PTO) and 7010 (Dual Mid SCV).*	7,529.00

TRANSMISSION

2015	12F/12R PowrReverser	In Base Price
2025	eHydro	1,093.00

Mid PTO

2500	Less Mid PTO	In Base Price
2505	Mid PTO	454.00

3320 Compact Utility Tractor (25 - 26 PTO hp)
Continued

CODE	ATTACHMENT IDENTIFIER	DESCRIPTION	SUGGESTED LIST PRICE USD ($)
		Mid PTO Continued... *Available only as Dealer-installed Option on 3320 Model Cab Tractors.*	
		WHEELS WITH TIRES (TWO)	
4515		25x8.50-14 6PR Front R4 Ind 2 Pos. 15-19.5 6PR Rear R4 Ind. 2 Pos.	230.00
4520		27x8.50-15 6PR Front R3 Turf 2 Pos. 41x14.0-20 4PR Rear R3 Turf 2 Pos.	361.00
4525		7-14 6PR Front R1 Bar 2 Pos. 11.2-24 6PR Rear R1 Bar 8 Pos.	In Base Price
4570		25x10.5LL-15 6PR Front R3 Turf Special 2 Pos. 41x18LL-16.1 6PR Rear R3 Turf Special 2Pos.	1,276.00
4575		27x8.5-15 6PR Front R4 Ind. 2 Pos. 43x16-20 4PR Rear R4 Ind. 2 Pos.	410.00
		SELECTIVE CONTROL VALVES	
7010		Dual Mid Selective Control Valve	In Base Price
7030		Dual Mid & Single Electrohydraulic Rear SCV *Available only as Dealer-installed Option on 3320-3720 Model Cab with standard seat tractors.*	898.00
		ATTACHMENTS - ORDER AS DESIRED	
		Operator Environment:	
9520		Factory Installed Stereo (Jensen Receiver, Weather Band, Auxiliary Port, and iPod compatibility)	471.00
		Operator Manual and Decal Kit:	
9800		Spanish North American Operator's Manual and Decal Kit	No Charge
9998		China Operator's Manual and Decal Kit	No Charge
9980		Japan Operator's Manual and Decal Kit	No Charge
9981		Bangladesh Operator's Manual and Decal Kit	No Charge
9982		Korea Operator's Manual and Decal Kit	No Charge
9983		Thailand Operator's Manual and Decal Kit	No Charge
		ATTACHMENTS FOR FIELD CONVERSION	
		Engine:	
	AR87167	Engine Coolant Heater (110 Volt)	See Parts
	LVA13457	Spark Arrester Screen	See Parts
	LVB25884	Vertical Exhaust Kit	385.00

3320 Compact Utility Tractor (25 - 26 PTO hp)
Continued

CODE	ATTACHMENT IDENTIFIER	DESCRIPTION	SUGGESTED LIST PRICE USD ($)
		ATTACHMENTS FOR FIELD CONVERSION Continued...	
		Fenders:	
	LVB25686	Front Fender Kit	521.40
	LVB24860	Rear Fender Extension Kit (Cab Only)	259.60
	LVB25684	Rear Fender Extension Kit (Open Station Only)	259.60
		Hitch:	
	LVB25308	Telescoping Draft Links	342.10
	LVB25255	iMatch Quick Hitch Category 1 *Bushings NOT included. Orderable through parts (LVU15507).*	315.70
	LVB25976	iMatch Quick Hitch Category 1 with adjustable top hook	350.90
		Hood Guards:	
	BWA1190	Deluxe Hood Guard (3120-3720)	568.70
	BW15222	Deluxe Hood Guard Attachment	316.80
	BW15219	Hood Guard (3120-3720)	251.90
		Hydraulics:	
	LVB26035	4th & 5th Selective Control Valve Kit (Open Station Only) *Includes Rear Mounted Couplers, Hydraulic Lines and SCV Lever. Starting with MY2011. Not backward compatible. See Sales Manual for MY2011 serial number break.*	852.50
	LVB24854	Electric Diverter Kit (Cab Only) *Includes Two Additional SCV's Additional SCV's (Either Third and Fourth or Fourth and Fifth). Not compatible with MY2011 tractors. See sales manual for details.*	1,472.90
	LVB26076	Electric Diverter Kit (Cab Only) *Includes Two Additional SCV's Additional SCV's (Either Third and Fourth or Fourth and Fifth)* *Starting with MY2011. Not backward compatible. See Sales Manual for MY2011 serial number break*	1,537.80
	LVB25507	Electric Diverter Kit (Open Station Only) *Includes Diverter Valve, Two Sets of Rear Mounted couplers, Hydraulic Lines and Selector Switch. Not compatible with MY2011 tractors. See sales manual for details.*	1,478.40
	LVB26075	Electric Diverter Kit (Open Station Only) *Includes Diverter Valve, Two Sets of Rear Mounted couplers, Hydraulic Lines and Selector Switch. Starting with MY2011. Not backward compatible. See Sales Manual for MY2011 serial number break.*	1,537.80
	LVB26031	Electrohydraulic Third SCV Kit (Cab Only) *Includes Rear Mounted Couplers, Hydraulic Lines and SCV Lever. Starting with MY2011. Not backward compatible. See Sales Manual for MY2011 serial number break.*	1,112.10
	LVB26030	Electrohydraulic Third SCV Kit (Open Station Only) *For 3120-3720 Tractors, Dual SCV is Standard. Starting with MY2011. Not backward compatible. See Sales Manual for MY2011 serial number break.*	1,112.10

3320 Compact Utility Tractor (25 - 26 PTO hp)
Continued

CODE	ATTACHMENT IDENTIFIER	DESCRIPTION	SUGGESTED LIST PRICE USD ($)
		ATTACHMENTS FOR FIELD CONVERSION Continued...	
	LVB25781	Power Beyond Kit (Cab Tractors Only) *Includes Rear Mounted Hydraulic Couplers and Hoses for Use with Backhoe on 3120-3720 Cab Tractors. Not compatible with MY2011 tractors. See sales manual for details.*	396.00
	LVB26069	Power Beyond Kit (Cab Tractors Only) *Includes Rear Mounted Hydraulic Couplers and Hoses for use with Backhoe on 3120-3720 Cab Tractors. Starting with MY2011. Not backward compatible. See Sales Manual for MY2011 serial number break.*	412.50
	LVB25505	Power Beyond Kit (Open Station Only) *Includes Rear Mounted Hydraulic Couplers and Hoses for Use with Backhoe on 3120-3720, 4105 Open Station Tractors. Not compatible with MY2011 tractors. See sales manual for details.*	334.40
	LVB26064	Power Beyond Kit (Open Station Only) *Includes Rear Mounted Hydraulic Couplers and Hoses for Use with Backhoe on 3120-3720, 4105 Open Station Tractors. Starting with MY2011. Not backward compatible. See Sales Manual for MY2011 serial number break.*	412.50
	LVB25506	Third Selective Control Valve Kit (Open Station Only) *For 3120-3720 Tractors, Dual SCV is Standard. Not compatible with MY2011 or older tractors. See sales manual for details.*	278.30
	LVB24845	Third Selective control Valve Kit (Cab Only) *Includes Rear Mounted Couplers, Hydraulic Lines and SCV Lever. Not compatible with MY2011 or older tractors. See sales manual for details.*	333.30
	LVB25311	Top and Tilt Field Kit *Requires Electric Diverter Kit. For 3320 and 3520 MY2011 and prior*	1,125.30
	LVB26160	Top and Tilt Field Kit *Requires Electric Diverter Kit.* *Prior to MY2011 order LVB25311.*	1,236.40
		Lighting:	
	LVB25547	Auxiliary Rear Work Light Kit (1 Light) *Includes Wiring Harness. Not Compatible with Forward Lighting Kit (LVB25546). Not for use with Cab Tractors.*	62.70
	LVB24852	Beacon Light Kit (Cab Only)	236.50
	LVB25546	Forward Lighting Kit (2 Lights) *Requires Light Brush Guard Kit, LVB25016.* *Open Station Only.*	95.70
	LVB24853	Rear Work Light Kit (2 Lights) (Cab Only) *Cab is Pre-Wired.*	150.70
	LVB25016	Warning Light Brush Guard Kit (Two Guards)	49.50
		Miscellaneous:	
	LVB25015	55 Amp Alternator	304.70
	LVB25971	7-Pin Trailer Connector (Cab) *Serial # (H500599 -)*	107.80
	LVB25960	7-Pin Trailer Connector (Open Station)	271.70

3320 Compact Utility Tractor (25 - 26 PTO hp)
Continued

CODE	ATTACHMENT IDENTIFIER	DESCRIPTION	SUGGESTED LIST PRICE USD ($)
		ATTACHMENTS FOR FIELD CONVERSION Continued...	
	LVB25866	Automotive Style Cruise, Load Match, Speed Match, and Upgraded Motion Match Switch	112.20
	LVB25607	Back-up Alarm Kit *Requires eHydro Transmission Option.*	126.50
	LVB24851	Horn Kit (Cab Only)	47.30
	TY4453	Tire Chains *For use with LVB25532 and LVB25495 Rear Tires. Not for use with Cab Tractors.*	See Parts
	TY15651	Tire Chains *For use with LVB25674 Front Tires.*	See Parts
	TY15653	Tire Chains *For use with LVB25672 Front Tires. Not for use with Cab Tractors*	See Parts
	TY4457	Tire Chains *For Use With LVB25496 Rear Tires.*	See Parts
	TY15649	Tire Chains *For use with 27x8.50-15 (R3) Front Tires*	See Parts
	LVB24930	Tool Box Kit *Cab Only.*	61.60
		Operator Environment:	
	LVB24983	Air Seat Suspension Kit (Cab Only)	723.80
	LVB25688	Air Seat Suspension Kit (Open Station Only) *Includes Air Ride Suspension Only. Used with Seat that Ships With Tractor.*	657.80
	LVB26065	Cab Speaker and Radio Mount Kit *Cab Only. Compatible only with MY2010 or previous models. See sales manual for details.*	90.20
	LVB25334	Canopy - Standard	572.00
	LVB25332	Canopy Mounting Bracket and Hardware Kit	103.40
	LVB24876	Cigarette Lighter/Ashtray Kit (Cab Only) *For 3320, 3520, 3720, 4320, 4520 and 4720 Tractors.*	47.30
	LVB24844	External Mirror Kit (Cab Only)	184.80
	LVB24856	Rear Wiper Kit (Cab Only)	280.50
	SWJHD1620	Stereo with AM/FM, Weatherband, SIRIUS Satellite and iPod Ready *Stereo included with option Code 9520 when configuring Tractor.*	See Parts
	TY25324	Weather Protection Umbrella	See Parts
		Order Zone:	
	720969235	3-Point Hitch Tractor Receiver Hitch	In Catalog
	LP95233	Large Seat Cover	In Catalog

3320 Compact Utility Tractor (25 - 26 PTO hp)
Continued

CODE	ATTACHMENT IDENTIFIER	DESCRIPTION	SUGGESTED LIST PRICE USD ($)
		ATTACHMENTS FOR FIELD CONVERSION Continued...	
	LP95333	ROPS Organizer	In Catalog
		PTO:	
	LVB24846	Mid PTO Control Kit (Cab Only)	158.40
	LVB25537	Mid PTO Kit *Note: 3X20 Tractors equipped with RIO(Reverse Implement Option) and PRT transmission are not compatible with mid-mount mowers(for grooming).* *Tractors with serial numbers ending with 910000(OOS) and above will have RIO.* *Tractors with serial numbers ending with 940000(cab) and above will have RIO.*	656.70
		Spanish North American Kit:	
	LVB25997	Spanish North American Operator's Manual and Decal Kit *Cab Tractors.* *For 3320 and 3520 Tractors*	86.90
	LVB25989	Spanish North American Operator's Manual and Decal Kit *Open Station Tractors.* *For 3320 and 3520 Tractors*	70.40
	LVB26181	Spanish North American Operator's Manual and Decal Kit *Cab Tractors.*	90.20
	LVB26180	Spanish North American Operator's Manual and Decal Kit *Open Station Tractors.*	72.60
		Transmission:	
	LVA11189	Load Match Switch	See Parts
	LVB26139	PRT Oil Cooler Kit	291.50
	AR94493	Transmission Oil Heater *Requires AR95434 Cord Set, R34557 Clamp and (2) R44302, Self Locking Straps.*	See Parts
		Vandal Protection:	
	AL113087	Vandal Protection, Lockable Fuel Tank Cap *Cab Only.*	See Parts
		Weights:	
	BM19940	Attaching Hardware for Additional Rear Wheel Weight, 110 lb.	13.20
	BM19937	Attaching Hardware for Additional Rear Wheel Weight, 55 Lb.	9.90
	LVB25004	Attaching Hardware for Starter Rear Wheel Weight, 55 Lb.	52.80
	LVBM19607	Front Quik-Tatch Weight Kit (3020 Series, 3203, 4105) *Includes Rod and Spring Pins for Front Quik-Tatch Weights.*	46.20
	LVBM19581	Front Weight Bracket Extension Kit (3203, 3020 Series, 4105) *Includes Extension Bracket and All Hardware (Including Rod and Spring Pins) to Hold up to Ten Front Quik-Tatch Weights.*	238.70
	R66949	Quik-Tatch Weight, 42 Lb. *Requires (1) LVBM19607, Front Quik-Tatch Weight Kit.*	62.06
	BM19780	Quik-Tatch Weight, 70 lb. *Requires (1) LVBM19607, Front Quik-Tatch Weight Kit.*	108.90

3320 Compact Utility Tractor (25 - 26 PTO hp)
Continued

CODE	ATTACHMENT IDENTIFIER	DESCRIPTION	SUGGESTED LIST PRICE USD ($)
		ATTACHMENTS FOR FIELD CONVERSION Continued...	
	BM17968	Rear Wheel Weight, 55 Lb. *Starter and Additional Weight for 19.5 and 20 In. Wheel.*	140.80
	T19293	Weight, Rear Wheel 110 Lb. *Starter and Additional Weight for 24 In. Wheel. Requires Attaching Hardware 4 each of 03H1605 (Bolt) and 14H1039 (Nut) for Starter Weight and BM19940 for Additional Weight.*	277.64
		Wheels and Tires Front:	
	LVB25672	Two 2 position Steel Wheel with 7X14 In. 6PR (R1) Front Tires	467.50
	LVB25670	Two 2 Position Steel Wheels with 25x10.5LL-15 In. 6PR (R3) Turf Special Front Tires	770.00
	LVB25674	Two 2 Position Steel Wheels with 25x8.50-14 In. 6PR (R4) Front Tires	550.00
	LVB25673	Two 2 Position Steel Wheels with 27x8.5-15 In. 6PR (R4) Front Tires	606.10
	LVB25671	Two 2 Position Steel Wheels with 27x8.50-15 In. 6PR (R3) Front Tires	562.10
		Wheels and Tires Rear:	
	LVB25532	Two 2 Position Steel Wheels with 15-19.5 In. 6PR (R4) Rear Tires	1,552.10
	LVB25496	Two 2 Position Steel Wheels with 41x14.0-20 In. 4PR (R3) Rear Tires	1,655.50
	LVB25498	Two 2 Position Steel Wheels with 41x18LL-16.1 In. 6PR (R3) Turf Special Rear Tires	2,649.90
	LVB25494	Two 2 Position Steel Wheels with 43x16-20 In. 4PR (R4) Rear Tires	1,673.10
	LVB25495	Two 8 Position Steel Wheels with 11.2-24 In. 6PR (R1) Rear Tires	1,346.40

EXTENDED WARRANTY - RESIDENTIAL OWNERS/USE

Visit http://www.JohnDeere.com/ServicePlans for more information on John Deere Service Contracts. May not be Available in Parts of the U.S., Not Available in Canada. Price may vary due to driving distance and/or time from machine to dealership location.

3520 Compact Utility Tractor (30 - 31 PTO hp)

Equipment for Base Machine

ENGINE:
Yanmar Liquid Cooled Diesel Engine
Interim Tier IV EPA Emissions Certified
Engine HP 37.1 (27.3 kW)**
PTO HP 30.0 (22.4 kW) HST
PTO HP 30.5(22.7 kW) PRT
Rated Speed 2600 RPM
**Manufacturer's Estimate of Power (ISO) per 97/68 EC

TRANSMISSION:
4-Wheel Drive
PRT Transmission (3520)
Differential Lock

HYDRAULICS:
Dual Mid Selective Control Valve with Joystick Control Lever, Float, Regenerative Function, and SCV and Regenerative Lockout
PTO:
Independent 540 RPM Rear PTO
Electronically Engaged with Mechanical Mid-Both-Rear Selector
ELECTRICAL:
12-Volt Electrical System
40 Amp Alternator
Key Ignition Starter with Accessory and Pre-Heat Position
Maintenance Free Battery with 500 Cold Cranking Amps

OPERATOR PROTECTIVE STRUCTURE:
Deluxe Adjustable Vinyl Seat with Retractable Seat Belt
Folding ROPS (Roll-Over Protective Structure) Meets SAE J2194 and OSHA 1928 ROPS Certification Standards
Isolated Foot Rest
ComfortGard Cab (Optional):
12 Volt Auxilary Power Outlet
Air Conditioning and Heater
Cell Phone Holder
Deluxe Fabric Covered Seat with Retractable Seat Belt
Armrests
Dual Forward Work Lights
Exclusive Raised Header Bar
Two Speed Front Windshield Wiper/Washer
Fully Isolated Cab
High Impact Polymer Fenders with Integrated Tail Lights
Radio Preparation (w/antenna, speakers, wiring, media player storage slot)
Molded Rubber Floormat
Operator Manual Holder
Rearview Mirror (Inside)
Monitor Mounting Bosses (2 sets)
Right Hand and Left Hand Console Storage
Right Hand Control Center
Sealed Quiet Cabin
Sun Visor
Swing-Out Rear Window w/removable rear plug for monitor or controller wiring harnesses
Tilt Steering
Two Front/Two Rear Roof Mounted Warning Lights
Operator Presence with Safety Interlock System

BASE MACHINE (4WD):
11.2-24 6PR (R1) Rear Tires
7-14 6PR (R1) Front Tires

CODE	ATTACHMENT IDENTIFIER	DESCRIPTION	SUGGESTED LIST PRICE USD ($)

Select One Code From Each Required Category

BASE MACHINE

F.O.B. Grovetown, Georgia

6813LV	3520 Compact Utility Tractor (30 - 31 PTO hp)	23,395.00

OPERATOR STATION

1505	Open Station with Standard Seat *Option Codes 2035 (Auto HST), 7030 (Mid Dual and Single Electrohydraulic Rear SCV) and 2505 (Mid PTO) not available as package on Open Station Tractors.*	In Base Price
1510	Cab with Standard Seat *Requires Option Codes 2025 (eHydro), 2500 (Less Mid PTO) and 7010 (Dual Mid SCV).*	7,529.00
1515	Deluxe Cab with Standard Seat *Includes Rear Wiper and Rear Work Light. Requires Option codes 2025 (eHydro), 2505 (Mid PTO) and 7030 (Mid DSCV and Single Electrohydraulic Rear SCV). "Deluxe" Implies Mid PTO, Mid DSCV and Single Electrohydraulic Rear SCV.*	8,403.00

TRANSMISSION

2015	12F/12R PowrReverser	In Base Price

3520 Compact Utility Tractor (30 - 31 PTO hp)
Continued

CODE	ATTACHMENT IDENTIFIER	DESCRIPTION	SUGGESTED LIST PRICE USD ($)
		TRANSMISSION Continued...	
2025		eHydro	1,093.00
		Mid PTO	
2500		Less Mid PTO	In Base Price
2505		Mid PTO *Available only as Dealer-installed Option on 3520 Model Cab with standard seat Tractors.*	454.00
		WHEELS WITH TIRES (TWO)	
4515		25x8.50-14 6PR Front R4 Ind 2 Pos. 15-19.5 6PR Rear R4 Ind. 2 Pos.	230.00
4520		27x8.50-15 6PR Front R3 Turf 2 Pos. 41x14.0-20 4PR Rear R3 Turf 2 Pos.	361.00
4525		7-14 6PR Front R1 Bar 2 Pos. 11.2-24 6PR Rear R1 Bar 8 Pos.	In Base Price
4570		25x10.5LL-15 6PR Front R3 Turf Special 2 Pos. 41x18LL-16.1 6PR Rear R3 Turf Special 2Pos.	1,276.00
4575		27x8.5-15 6PR Front R4 Ind. 2 Pos. 43x16-20 4PR Rear R4 Ind. 2 Pos.	410.00
		SELECTIVE CONTROL VALVES	
7010		Dual Mid Selective Control Valve	In Base Price
7030		Dual Mid & Single Electrohydraulic Rear SCV *Available only as Dealer-installed Option on 3320-3720 Model Cab with standard seat tractors.*	898.00
		ATTACHMENTS - ORDER AS DESIRED	
		Operator Environment:	
9520		Factory Installed Stereo (Jensen Receiver, Weather Band, Auxiliary Port, and iPod compatibility)	471.00
		Operator Manual and Decal Kit:	
9800		Spanish North American Operator's Manual and Decal Kit	No Charge
9998		China Operator's Manual and Decal Kit	No Charge
9981		Bangladesh Operator's Manual and Decal Kit	No Charge
9982		Korea Operator's Manual and Decal Kit	No Charge
9983		Thailand Operator's Manual and Decal Kit	No Charge

ATTACHMENTS FOR FIELD CONVERSION

3520 Compact Utility Tractor (30 - 31 PTO hp)
Continued

CODE	ATTACHMENT IDENTIFIER	DESCRIPTION	SUGGESTED LIST PRICE USD ($)
		ATTACHMENTS FOR FIELD CONVERSION Continued...	
		Engine:	
	AR87167	Engine Coolant Heater (110 Volt)	See Parts
	LVA13457	Spark Arrester Screen	See Parts
	LVB25884	Vertical Exhaust Kit	385.00
		Fenders:	
	LVB25686	Front Fender Kit	521.40
	LVB24860	Rear Fender Extension Kit (Cab Only)	259.60
	LVB25684	Rear Fender Extension Kit (Open Station Only)	259.60
		Hitch:	
	LVB25308	Telescoping Draft Links	342.10
	LVB25255	iMatch Quick Hitch Category 1 *Bushings NOT included. Orderable through parts (LVU15507).*	315.70
	LVB25976	iMatch Quick Hitch Category 1 with adjustable top hook	350.90
		Hood Guards:	
	BWA1190	Deluxe Hood Guard (3120-3720)	568.70
	BW15222	Deluxe Hood Guard Attachment	316.80
	BW15219	Hood Guard (3120-3720)	251.90
		Hydraulics:	
	LVB26035	4th & 5th Selective Control Valve Kit (Open Station Only) *Includes Rear Mounted Couplers, Hydraulic Lines and SCV Lever. Starting with MY2011. Not backward compatible. See Sales Manual for MY2011 serial number break.*	852.50
	LVB24854	Electric Diverter Kit (Cab Only) *Includes Two Additional SCV's Additional SCV's (Either Third and Fourth or Fourth and Fifth). Not compatible with MY2011 tractors. See sales manual for details.*	1,472.90
	LVB26076	Electric Diverter Kit (Cab Only) *Includes Two Additional SCV's Additional SCV's (Either Third and Fourth or Fourth and Fifth)* *Starting with MY2011. Not backward compatible. See Sales Manual for MY2011 serial number break*	1,537.80
	LVB25507	Electric Diverter Kit (Open Station Only) *Includes Diverter Valve, Two Sets of Rear Mounted couplers, Hydraulic Lines and Selector Switch. Not compatible with MY2011 tractors. See sales manual for details.*	1,478.40
	LVB26075	Electric Diverter Kit (Open Station Only) *Includes Diverter Valve, Two Sets of Rear Mounted couplers, Hydraulic Lines and Selector Switch. Starting with MY2011. Not backward compatible. See Sales Manual for MY2011 serial number break.*	1,537.80
	LVB26031	Electrohydraulic Third SCV Kit (Cab Only) *Includes Rear Mounted Couplers, Hydraulic Lines and SCV Lever. Starting with MY2011. Not backward compatible. See Sales Manual for MY2011 serial number break.*	1,112.10

3520 Compact Utility Tractor (30 - 31 PTO hp)
Continued

CODE	ATTACHMENT IDENTIFIER	DESCRIPTION	SUGGESTED LIST PRICE USD ($)
		ATTACHMENTS FOR FIELD CONVERSION Continued...	
	LVB26030	Electrohydraulic Third SCV Kit (Open Station Only) *For 3120-3720 Tractors, Dual SCV is Standard. Starting with MY2011. Not backward compatible. See Sales Manual for MY2011 serial number break.*	1,112.10
	LVB25781	Power Beyond Kit (Cab Tractors Only) *Includes Rear Mounted Hydraulic Couplers and Hoses for Use with Backhoe on 3120-3720 Cab Tractors. Not compatible with MY2011 tractors. See sales manual for details.*	396.00
	LVB26069	Power Beyond Kit (Cab Tractors Only) *Includes Rear Mounted Hydraulic Couplers and Hoses for use with Backhoe on 3120-3720 Cab Tractors. Starting with MY2011. Not backward compatible. See Sales Manual for MY2011 serial number break.*	412.50
	LVB25505	Power Beyond Kit (Open Station Only) *Includes Rear Mounted Hydraulic Couplers and Hoses for Use with Backhoe on 3120-3720, 4105 Open Station Tractors. Not compatible with MY2011 tractors. See sales manual for details.*	334.40
	LVB26064	Power Beyond Kit (Open Station Only) *Includes Rear Mounted Hydraulic Couplers and Hoses for Use with Backhoe on 3120-3720, 4105 Open Station Tractors. Starting with MY2011. Not backward compatible. See Sales Manual for MY2011 serial number break.*	412.50
	LVB25506	Third Selective Control Valve Kit (Open Station Only) *For 3120-3720 Tractors, Dual SCV is Standard. Not compatible with MY2011 or older tractors. See sales manual for details.*	278.30
	LVB24845	Third Selective control Valve Kit (Cab Only) *Includes Rear Mounted Couplers, Hydraulic Lines and SCV Lever. Not compatible with MY2011 or older tractors. See sales manual for details.*	333.30
	LVB25311	Top and Tilt Field Kit *Requires Electric Diverter Kit. For 3320 and 3520 MY2011 and prior*	1,125.30
	LVB26160	Top and Tilt Field Kit *Requires Electric Diverter Kit.* *Prior to MY2011 order LVB25311.*	1,236.40
		Lighting:	
	LVB25547	Auxiliary Rear Work Light Kit (1 Light) *Includes Wiring Harness. Not Compatible with Forward Lighting Kit (LVB25546). Not for use with Cab Tractors.*	62.70
	LVB24852	Beacon Light Kit (Cab Only)	236.50
	LVB25546	Forward Lighting Kit (2 Lights) *Requires Light Brush Guard Kit, LVB25016.* *Open Station Only.*	95.70
	LVB24853	Rear Work Light Kit (2 Lights) (Cab Only) *Cab is Pre-Wired.*	150.70
	LVB25016	Warning Light Brush Guard Kit (Two Guards)	49.50
		Miscellaneous:	
	LVB25015	55 Amp Alternator	304.70

3520 Compact Utility Tractor (30 - 31 PTO hp)
Continued

CODE	ATTACHMENT IDENTIFIER	DESCRIPTION	SUGGESTED LIST PRICE USD ($)
		ATTACHMENTS FOR FIELD CONVERSION Continued...	
	LVB25971	7-Pin Trailer Connector (Cab) *Serial # (H512472 -)*	107.80
	LVB25960	7-Pin Trailer Connector (Open Station)	271.70
	LVB25866	Automotive Style Cruise, Load Match, Speed Match, and Upgraded Motion Match Switch	112.20
	LVB25607	Back-up Alarm Kit *Requires eHydro Transmission Option.*	126.50
	LVB24851	Horn Kit (Cab Only)	47.30
	TY4453	Tire Chains *For use with LVB25532 and LVB25495 Rear Tires. Not for use with Cab Tractors.*	See Parts
	TY15651	Tire Chains *For use with LVB25674 Front Tires.*	See Parts
	TY15653	Tire Chains *For use with LVB25672 Front Tires. Not for use with Cab Tractors*	See Parts
	TY4457	Tire Chains *For Use With LVB25496 Rear Tires.*	See Parts
	TY15649	Tire Chains *For use with 27x8.50-15 (R3) Front Tires*	See Parts
	LVB24930	Tool Box Kit *Cab Only.*	61.60
		Operator Environment:	
	LVB24983	Air Seat Suspension Kit (Cab Only)	723.80
	LVB25688	Air Seat Suspension Kit (Open Station Only) *Includes Air Ride Suspension Only. Used with Seat that Ships With Tractor.*	657.80
	LVB26065	Cab Speaker and Radio Mount Kit *Cab Only. Compatible only with MY2010 or previous models. See sales manual for details.*	90.20
	LVB25334	Canopy - Standard	572.00
	LVB25332	Canopy Mounting Bracket and Hardware Kit	103.40
	LVB24876	Cigarette Lighter/Ashtray Kit (Cab Only) *For 3320, 3520, 3720, 4320, 4520 and 4720 Tractors.*	47.30
	LVB24844	External Mirror Kit (Cab Only)	184.80
	RE289848	Radio, Deere/Delco AM/FM Stereo with Clock, Front Audio Input Jack for MP3 Players, and Weatherband *Requires LVB26065 Cab Speaker and Radio Mount Kit.* *Cab only. Compatible only with MY2010 or previous models.*	434.00

3520 Compact Utility Tractor (30 - 31 PTO hp)
Continued

CODE	ATTACHMENT IDENTIFIER	DESCRIPTION	SUGGESTED LIST PRICE USD ($)
		ATTACHMENTS FOR FIELD CONVERSION Continued...	
	RE289852	Radio, Deere/Delco AM/FM Stereo with Single Compact Disc Player, Clock, Front Audio Input Jack for MP3 Players, and Weatherband *Requires LVB26065 Cab Speaker and Radio Mount Kit.* *Cab only. Compatible only with MY2010 or previous models.*	849.00
	LVB24856	Rear Wiper Kit (Cab Only)	280.50
	SWJHD1620	Stereo with AM/FM, Weatherband, SIRIUS Satellite and iPod Ready *Stereo included with option Code 9520 when configuring Tractor.*	See Parts
	TY25324	Weather Protection Umbrella	See Parts
		Order Zone:	
	720969235	3-Point Hitch Tractor Receiver Hitch	In Catalog
	LP95233	Large Seat Cover	In Catalog
	LP95333	ROPS Organizer	In Catalog
		PTO:	
	LVB24846	Mid PTO Control Kit (Cab Only)	158.40
	LVB25537	Mid PTO Kit *Note: 3X20 Tractors equipped with RIO(Reverse Implement Option) and PRT transmission are not compatible with mid-mount mowers(for grooming).* *Tractors with serial numbers ending with 910000(OOS) and above will have RIO.* *Tractors with serial numbers ending with 940000(cab) and above will have RIO.*	656.70
		Spanish North American Kit:	
	LVB25997	Spanish North American Operator's Manual and Decal Kit *Cab Tractors.* *For 3320 and 3520 Tractors*	86.90
	LVB25989	Spanish North American Operator's Manual and Decal Kit *Open Station Tractors.* *For 3320 and 3520 Tractors*	70.40
	LVB26181	Spanish North American Operator's Manual and Decal Kit *Cab Tractors.*	90.20
	LVB26180	Spanish North American Operator's Manual and Decal Kit *Open Station Tractors.*	72.60
		Transmission:	
	LVA11189	Load Match Switch	See Parts
	LVB26139	PRT Oil Cooler Kit	291.50
	AR94493	Transmission Oil Heater *Requires AR95434 Cord Set, R34557 Clamp and (2) R44302, Self Locking Straps.*	See Parts
		Vandal Protection:	
	AL113087	Vandal Protection, Lockable Fuel Tank Cap *Cab Only.*	See Parts
		Weights:	
	BM19940	Attaching Hardware for Additional Rear Wheel Weight, 110 lb.	13.20

3520 Compact Utility Tractor (30 - 31 PTO hp)
Continued

CODE	ATTACHMENT IDENTIFIER	DESCRIPTION	SUGGESTED LIST PRICE USD ($)
		ATTACHMENTS FOR FIELD CONVERSION Continued...	
	BM19937	Attaching Hardware for Additional Rear Wheel Weight, 55 Lb.	9.90
	LVB25004	Attaching Hardware for Starter Rear Wheel Weight, 55 Lb.	52.80
	LVBM19607	Front Quik-Tatch Weight Kit (3020 Series, 3203, 4105) *Includes Rod and Spring Pins for Front Quik-Tatch Weights.*	46.20
	LVBM19581	Front Weight Bracket Extension Kit (3203, 3020 Series, 4105) *Includes Extension Bracket and All Hardware (Including Rod and Spring Pins) to Hold up to Ten Front Quik-Tatch Weights.*	238.70
	R66949	Quik-Tatch Weight, 42 Lb. *Requires (1) LVBM19607, Front Quik-Tatch Weight Kit.*	62.06
	BM19780	Quik-Tatch Weight, 70 lb. *Requires (1) LVBM19607, Front Quik-Tatch Weight Kit.*	108.90
	BM17968	Rear Wheel Weight, 55 Lb. *Starter and Additional Weight for 19.5 and 20 In. Wheel.*	140.80
	T19293	Weight, Rear Wheel 110 Lb. *Starter and Additional Weight for 24 In. Wheel.* *Requires Attaching Hardware 4 each of 03H1605 (Bolt) and 14H1039 (Nut) for Starter Weight and BM19940 for Additional Weight.*	277.64
		Wheels and Tires Front:	
	LVB25672	Two 2 position Steel Wheel with 7X14 In. 6PR (R1) Front Tires	467.50
	LVB25670	Two 2 Position Steel Wheels with 25x10.5LL-15 In. 6PR (R3) Turf Special Front Tires	770.00
	LVB25674	Two 2 Position Steel Wheels with 25x8.50-14 In. 6PR (R4) Front Tires	550.00
	LVB25673	Two 2 Position Steel Wheels with 27x8.5-15 In. 6PR (R4) Front Tires	606.10
	LVB25671	Two 2 Position Steel Wheels with 27x8.50-15 In. 6PR (R3) Front Tires	562.10
		Wheels and Tires Rear:	
	LVB25532	Two 2 Position Steel Wheels with 15-19.5 In. 6PR (R4) Rear Tires	1,552.10
	LVB25496	Two 2 Position Steel Wheels with 41x14.0-20 In. 4PR (R3) Rear Tires	1,655.50
	LVB25498	Two 2 Position Steel Wheels with 41x18LL-16.1 In. 6PR (R3) Turf Special Rear Tires	2,649.90
	LVB25494	Two 2 Position Steel Wheels with 43x16-20 In. 4PR (R4) Rear Tires	1,673.10
	LVB25495	Two 8 Position Steel Wheels with 11.2-24 In. 6PR (R1) Rear Tires	1,346.40

3520 Compact Utility Tractor (30 - 31 PTO hp)

Continued

CODE	ATTACHMENT IDENTIFIER	DESCRIPTION	SUGGESTED LIST PRICE USD ($)
		EXTENDED WARRANTY - RESIDENTIAL OWNERS/USE	
		Visit http://www.JohnDeere.com/ServicePlans for more information on John Deere Service Contracts. May not be Available in Parts of the U.S., Not Available in Canada. Price may vary due to driving distance and/or time from machine to dealership location.	

3720 Compact Utility Tractor (35 PTO hp)

Equipment for Base Machine

ENGINE:
Yanmar Liquid Cooled
Diesel Engine
Interim Tier IV EPA Emissions
Certified
Engine HP 43.2 (31.8 kW)**
PTO HP 35.0 (26.1 kW)
Rated Speed 2600 RPM
**Manufacturer's Estimate of
Power (ISO) per 97/68 EC

TRANSMISSION:
4-Wheel Drive
eHydro Transmission (3720)
Differential Lock

HYDRAULICS:
Dual Mid Selective Control
Valve with Joystick Control
Lever, Float, Regenerative
Function, and SCV and
Regenerative Lockout

PTO:
Independent 540 RPM Rear PTO
Electronically Engaged with
Mechanical Mid-Both-Rear
Selector

ELECTRICAL:
12-Volt Electrical System
40 Amp Alternator
Key Ignition Starter with
Accessory and Pre-Heat
Position
Maintenance Free Battery with
500 Cold Cranking Amps

OPERATOR PROTECTIVE STRUCTURE:
Deluxe Adjustable Vinyl Seat
with Retractable Seat Belt
Folding ROPS (Roll-Over
Protective Structure)
Meets SAE J2194 and OSHA
1928 ROPS Certification
Standards
Isolated Foot Rest
ComfortGard Cab (Optional):
12 Volt Auxilary Power Outlet
Air Conditioning and Heater
Cell Phone Holder
Deluxe Fabric Covered Seat with
Retractable Seat Belt
Armrests
Dual Forward Work Lights
Exclusive Raised Header Bar
Two Speed Front Windshield
Wiper/Washer
Fully Isolated Cab
High Impact Polymer Fenders with
Integrated Tail Lights
Radio Preparation (w/antenna,
speakers, wiring, media player
storage slot)
Molded Rubber Floormat
Operator Manual Holder
Rearview Mirror (Inside)
Monitor Mounting Bosses (2 sets)
Right Hand and Left Hand Console
Storage
Right Hand Control Center
Sealed Quiet Cabin
Sun Visor
Swing-Out Rear
Window w/removable
rear plug for monitor or
controller
wiring harnesses
Tilt Steering
Two Front/Two Rear Roof Mounted
Warning Lights
Operator Presence with
Safety Interlock System

BASE MACHINE (4WD):
11.2-24 6PR (R1) Rear Tires
7-14 6PR (R1) Front Tires

CODE	ATTACHMENT IDENTIFIER	DESCRIPTION	SUGGESTED LIST PRICE USD ($)

Select One Code From Each Required Category

BASE MACHINE

F.O.B. Grovetown, Georgia

6823LV	3720 Compact Utility Tractor (35 PTO hp)	27,088.00

OPERATOR STATION

1505	Open Station with Standard Seat *Option Codes 2035 (Auto HST), 7030 (Mid Dual and Single Electrohydraulic Rear SCV) and 2505 (Mid PTO) not available as package on Open Station Tractors. Requires option Codes 2500 (Less Mid PTO) and 7010 (Mid DSCV)*	In Base Price
1506	Open Station with Air Ride Seat *Option Codes 2035 (Auto HST), 7010 (Mid Dual SCV) and 2500 (Less Mid PTO) not available as package on Open Station Tractors with Air Ride Seat.*	344.00
1510	Cab with Standard Seat	7,529.00
1514	Deluxe Cab with Air Ride Seat *Includes Rear Wiper and Rear Work Light. Requires Option Codes 2025 (eHydro), 2505 (Mid PTO) and 7030 (Mid DSCV and Single Electrohydraulic Rear SCV). "Deluxe" Implies Mid PTO, Mid DSCV and Single Electrohydraulic Rear SCV.*	8,960.00

3720 Compact Utility Tractor (35 PTO hp)

Continued

CODE	ATTACHMENT IDENTIFIER	DESCRIPTION	SUGGESTED LIST PRICE USD ($)
		TRANSMISSION	
2025		eHydro	In Base Price
		Mid PTO	
2500		Less Mid PTO	In Base Price
2505		Mid PTO *Available only as Dealer-installed Option on 3520 Model Cab with standard seat Tractors.*	454.00
		WHEELS WITH TIRES (TWO)	
4515		25x8.50-14 6PR Front R4 Ind 2 Pos. 15-19.5 6PR Rear R4 Ind. 2 Pos.	230.00
4520		27x8.50-15 6PR Front R3 Turf 2 Pos. 41x14.0-20 4PR Rear R3 Turf 2 Pos.	361.00
4525		7-14 6PR Front R1 Bar 2 Pos. 11.2-24 6PR Rear R1 Bar 8 Pos.	In Base Price
4570		25x10.5LL-15 6PR Front R3 Turf Special 2 Pos. 41x18LL-16.1 6PR Rear R3 Turf Special 2Pos.	1,276.00
4575		27x8.5-15 6PR Front R4 Ind. 2 Pos. 43x16-20 4PR Rear R4 Ind. 2 Pos.	410.00
4595		Less Wheels and Tires	-364.00
		SELECTIVE CONTROL VALVES	
7010		Dual Mid Selective Control Valve	In Base Price
7030		Dual Mid & Single Electrohydraulic Rear SCV *Available only as Dealer-installed Option on 3320-3720 Model Cab with standard seat tractors.*	898.00
		ATTACHMENTS - ORDER AS DESIRED	
		Operator Environment:	
9520		Factory Installed Stereo (Jensen Receiver, Weather Band, Auxiliary Port, and iPod compatibility)	471.00
		Operator Manual and Decal Kit:	
9800		Spanish North American Operator's Manual and Decal Kit	No Charge
9998		China Operator's Manual and Decal Kit	No Charge
9981		Bangladesh Operator's Manual and Decal Kit	No Charge
9982		Korea Operator's Manual and Decal Kit	No Charge
9983		Thailand Operator's Manual and Decal Kit	No Charge

ATTACHMENTS FOR FIELD CONVERSION

3720 Compact Utility Tractor (35 PTO hp)
Continued

CODE	ATTACHMENT IDENTIFIER	DESCRIPTION	SUGGESTED LIST PRICE USD ($)
		ATTACHMENTS FOR FIELD CONVERSION Continued...	
		Engine:	
	AR87167	Engine Coolant Heater (110 Volt)	See Parts
	LVA13457	Spark Arrester Screen	See Parts
	LVB25884	Vertical Exhaust Kit	385.00
		Fenders:	
	LVB25686	Front Fender Kit	521.40
	LVB24860	Rear Fender Extension Kit (Cab Only)	259.60
	LVB25684	Rear Fender Extension Kit (Open Station Only)	259.60
		Hitch:	
	LVB25308	Telescoping Draft Links *For Use on Tractors Equipped with Horizontal-Bar Stabilizers.*	342.10
	LVB25255	iMatch Quick Hitch Category 1 *Bushings NOT included. Orderable through parts (LVU15507).*	315.70
	LVB25976	iMatch Quick Hitch Category 1 with adjustable top hook	350.90
		Hood Guards:	
	BWA1190	Deluxe Hood Guard (3120-3720)	568.70
	BW15222	Deluxe Hood Guard Attachment	316.80
	BW15219	Hood Guard (3120-3720)	251.90
		Hydraulics:	
	LVB26035	4th & 5th Selective Control Valve Kit (Open Station Only) *Includes Rear Mounted Couplers, Hydraulic Lines and SCV Lever. Starting with MY2011. Not backward compatible. See Sales Manual for MY2011 serial number break.*	852.50
	LVB24854	Electric Diverter Kit (Cab Only) *Includes Two Additional SCV's Additional SCV's (Either Third and Fourth or Fourth and Fifth). Not compatible with MY2011 tractors. See sales manual for details.*	1,472.90
	LVB26076	Electric Diverter Kit (Cab Only) *Includes Two Additional SCV's Additional SCV's (Either Third and Fourth or Fourth and Fifth)* *Starting with MY2011. Not backward compatible. See Sales Manual for MY2011 serial number break*	1,537.80
	LVB25507	Electric Diverter Kit (Open Station Only) *Includes Diverter Valve, Two Sets of Rear Mounted couplers, Hydraulic Lines and Selector Switch. Not compatible with MY2011 tractors. See sales manual for details.*	1,478.40
	LVB26075	Electric Diverter Kit (Open Station Only) *Includes Diverter Valve, Two Sets of Rear Mounted couplers, Hydraulic Lines and Selector Switch. Starting with MY2011. Not backward compatible. See Sales Manual for MY2011 serial number break.*	1,537.80

3720 Compact Utility Tractor (35 PTO hp)
Continued

CODE	ATTACHMENT IDENTIFIER	DESCRIPTION	SUGGESTED LIST PRICE USD ($)
		ATTACHMENTS FOR FIELD CONVERSION Continued...	
	LVB26031	Electrohydraulic Third SCV Kit (Cab Only) *Includes Rear Mounted Couplers, Hydraulic Lines and SCV Lever. Starting with MY2011. Not backward compatible. See Sales Manual for MY2011 serial number break.*	1,112.10
	LVB26030	Electrohydraulic Third SCV Kit (Open Station Only) *For 3120-3720 Tractors, Dual SCV is Standard. Starting with MY2011. Not backward compatible. See Sales Manual for MY2011 serial number break.*	1,112.10
	LVB25781	Power Beyond Kit (Cab Tractors Only) *Includes Rear Mounted Hydraulic Couplers and Hoses for Use with Backhoe on 3120-3720 Cab Tractors. Not compatible with MY2011 tractors. See sales manual for details.*	396.00
	LVB26069	Power Beyond Kit (Cab Tractors Only) *Includes Rear Mounted Hydraulic Couplers and Hoses for use with Backhoe on 3120-3720 Cab Tractors. Starting with MY2011. Not backward compatible. See Sales Manual for MY2011 serial number break.*	412.50
	LVB25505	Power Beyond Kit (Open Station Only) *Includes Rear Mounted Hydraulic Couplers and Hoses for Use with Backhoe on 3120-3720, 4105 Open Station Tractors. Not compatible with MY2011 tractors. See sales manual for details.*	334.40
	LVB26064	Power Beyond Kit (Open Station Only) *Includes Rear Mounted Hydraulic Couplers and Hoses for Use with Backhoe on 3120-3720, 4105 Open Station Tractors. Starting with MY2011. Not backward compatible. See Sales Manual for MY2011 serial number break.*	412.50
	LVB25506	Third Selective Control Valve Kit (Open Station Only) *For 3120-3720 Tractors, Dual SCV is Standard. Not compatible with MY2011 or older tractors. See sales manual for details.*	278.30
	LVB24845	Third Selective control Valve Kit (Cab Only) *Includes Rear Mounted Couplers, Hydraulic Lines and SCV Lever. Not compatible with MY2011 or older tractors. See sales manual for details.*	333.30
	LVB25311	Top and Tilt Field Kit *Requires Electric Diverter Kit. For 3320 and 3520 MY2011 and prior*	1,125.30
	LVB26160	Top and Tilt Field Kit *Requires Electric Diverter Kit.* *Prior to MY2011 order LVB25311.*	1,236.40
		Lighting:	
	LVB25547	Auxiliary Rear Work Light Kit (1 Light) *Includes Wiring Harness. Not Compatible with Forward Lighting Kit (LVB25546). Not for use with Cab Tractors.*	62.70
	LVB24852	Beacon Light Kit (Cab Only)	236.50
	LVB25546	Forward Lighting Kit (2 Lights) *Requires Light Brush Guard Kit, LVB25016.* *Open Station Only.*	95.70
	LVB24853	Rear Work Light Kit (2 Lights) (Cab Only) *Cab is Pre-Wired.*	150.70
	LVB25016	Warning Light Brush Guard Kit (Two Guards)	49.50

3720 Compact Utility Tractor (35 PTO hp)
Continued

CODE	ATTACHMENT IDENTIFIER	DESCRIPTION	SUGGESTED LIST PRICE USD ($)
		ATTACHMENTS FOR FIELD CONVERSION Continued...	
		Miscellaneous:	
	LVB25015	55 Amp Alternator	304.70
	LVB25971	7-Pin Trailer Connector (Cab) *Serial # (H522565 -)*	107.80
	LVB25960	7-Pin Trailer Connector (Open Station)	271.70
	LVB25866	Automotive Style Cruise, Load Match, Speed Match, and Upgraded Motion Match Switch	112.20
	LVB25607	Back-up Alarm Kit *Requires eHydro Transmission Option.*	126.50
	LVB24851	Horn Kit (Cab Only)	47.30
	TY4453	Tire Chains *For use with LVB25532 and LVB25495 Rear Tires. Not for use with Cab Tractors.*	See Parts
	TY15651	Tire Chains *For use with LVB25674 Front Tires.*	See Parts
	TY15653	Tire Chains *For use with LVB25672 Front Tires. Not for use with Cab Tractors*	See Parts
	TY4457	Tire Chains *For Use With LVB25496 Rear Tires.*	See Parts
	TY15649	Tire Chains *For use with 27x8.50-15 (R3) Front Tires*	See Parts
	LVB24930	Tool Box Kit *Cab Only.*	61.60
		Operator Environment:	
	LVB24983	Air Seat Suspension Kit (Cab Only)	723.80
	LVB25688	Air Seat Suspension Kit (Open Station Only) *Includes Air Ride Suspension Only. Used with Seat that Ships With Tractor.*	657.80
	LVB26065	Cab Speaker and Radio Mount Kit *Cab Only. Compatible only with MY2010 or previous models. See sales manual for details.*	90.20
	LVB25334	Canopy - Standard	572.00
	LVB25332	Canopy Mounting Bracket and Hardware Kit	103.40
	LVB24876	Cigarette Lighter/Ashtray Kit (Cab Only) *For 3320, 3520, 3720, 4320, 4520 and 4720 Tractors.*	47.30
	LVB24844	External Mirror Kit (Cab Only)	184.80
	RE289848	Radio, Deere/Delco AM/FM Stereo with Clock, Front Audio Input Jack for MP3 Players, and Weatherband *Requires LVB26065 Cab Speaker and Radio Mount Kit.* *Cab only. Compatible only with MY2010 or previous models.*	434.00

3720 Compact Utility Tractor (35 PTO hp)
Continued

CODE	ATTACHMENT IDENTIFIER	DESCRIPTION	SUGGESTED LIST PRICE USD ($)
		ATTACHMENTS FOR FIELD CONVERSION Continued...	
	RE289852	Radio, Deere/Delco AM/FM Stereo with Single Compact Disc Player, Clock, Front Audio Input Jack for MP3 Players, and Weatherband *Requires LVB26065 Cab Speaker and Radio Mount Kit.* *Cab only. Compatible only with MY2010 or previous models.*	849.00
	LVB24856	Rear Wiper Kit (Cab Only)	280.50
	SWJHD1620	Stereo with AM/FM, Weatherband, SIRIUS Satellite and iPod Ready *Stereo included with option Code 9520 when configuring Tractor.*	See Parts
	TY25324	Weather Protection Umbrella	See Parts
		Order Zone:	
	720969235	3-Point Hitch Tractor Receiver Hitch	In Catalog
	LP95233	Large Seat Cover	In Catalog
	LP95333	ROPS Organizer	In Catalog
		PTO:	
	LVB24846	Mid PTO Control Kit (Cab Only)	158.40
	LVB25537	Mid PTO Kit *Note: 3X20 Tractors equipped with RIO(Reverse Implement Option) and PRT transmission are not compatible with mid-mount mowers(for grooming).* *Tractors with serial numbers ending with 910000(OOS) and above will have RIO.* *Tractors with serial numbers ending with 940000(cab) and above will have RIO.*	656.70
		Spanish North American Kit:	
	LVB26181	Spanish North American Operator's Manual and Decal Kit *Cab Tractors.*	90.20
	LVB26180	Spanish North American Operator's Manual and Decal Kit *Open Station Tractors.*	72.60
		Transmission:	
	LVA11189	Load Match Switch	See Parts
	LVB26139	PRT Oil Cooler Kit	291.50
	AR94493	Transmission Oil Heater *Requires AR95434 Cord Set, R34557 Clamp and (2) R44302, Self Locking Straps.*	See Parts
		Vandal Protection:	
	AL113087	Vandal Protection, Lockable Fuel Tank Cap *Cab Only.*	See Parts
		Weights:	
	BM19940	Attaching Hardware for Additional Rear Wheel Weight, 110 lb.	13.20
	BM19937	Attaching Hardware for Additional Rear Wheel Weight, 55 Lb.	9.90
	LVB25004	Attaching Hardware for Starter Rear Wheel Weight, 55 Lb.	52.80
	LVBM19607	Front Quik-Tatch Weight Kit (3020 Series, 3203, 4105) *Includes Rod and Spring Pins for Front Quik-Tatch Weights.*	46.20

3720 Compact Utility Tractor (35 PTO hp)
Continued

CODE	ATTACHMENT IDENTIFIER	DESCRIPTION	SUGGESTED LIST PRICE USD ($)
		ATTACHMENTS FOR FIELD CONVERSION Continued...	
	LVBM19581	Front Weight Bracket Extension Kit (3203, 3020 Series, 4105) *Includes Extension Bracket and All Hardware (Including Rod and Spring Pins) to Hold up to Ten Front Quik-Tatch Weights.*	238.70
	R66949	Quik-Tatch Weight, 42 Lb. *Requires (1) LVBM19607, Front Quik-Tatch Weight Kit.*	62.06
	BM19780	Quik-Tatch Weight, 70 lb. *Requires (1) LVBM19607, Front Quik-Tatch Weight Kit.*	108.90
	BM17968	Rear Wheel Weight, 55 Lb. *Starter and Additional Weight for 19.5 and 20 In. Wheel.*	140.80
	T19293	Weight, Rear Wheel 110 Lb. *Starter and Additional Weight for 24 In. Wheel. Requires Attaching Hardware 4 each of 03H1605 (Bolt) and 14H1039 (Nut) for Starter Weight and BM19940 for Additional Weight.*	277.64
		Wheels and Tires Front:	
	LVB25672	Two 2 position Steel Wheel with 7X14 In. 6PR (R1) Front Tires	467.50
	LVB25670	Two 2 Position Steel Wheels with 25x10.5LL-15 In. 6PR (R3) Turf Special Front Tires	770.00
	LVB25674	Two 2 Position Steel Wheels with 25x8.50-14 In. 6PR (R4) Front Tires	550.00
	LVB25673	Two 2 Position Steel Wheels with 27x8.5-15 In. 6PR (R4) Front Tires	606.10
	LVB25671	Two 2 Position Steel Wheels with 27x8.50-15 In. 6PR (R3) Front Tires	562.10
		Wheels and Tires Rear:	
	LVB25532	Two 2 Position Steel Wheels with 15-19.5 In. 6PR (R4) Rear Tires	1,552.10
	LVB25496	Two 2 Position Steel Wheels with 41x14.0-20 In. 4PR (R3) Rear Tires	1,655.50
	LVB25498	Two 2 Position Steel Wheels with 41x18LL-16.1 In. 6PR (R3) Turf Special Rear Tires	2,649.90
	LVB25494	Two 2 Position Steel Wheels with 43x16-20 In. 4PR (R4) Rear Tires	1,673.10
	LVB25495	Two 8 Position Steel Wheels with 11.2-24 In. 6PR (R1) Rear Tires	1,346.40

EXTENDED WARRANTY - RESIDENTIAL OWNERS/USE

Visit http://www.JohnDeere.com/ServicePlans for more information on John Deere Service Contracts. May not be Available in Parts of the U.S., Not Available in Canada. Price may vary due to driving distance and/or time from machine to dealership location.

4105 Compact Utility Tractor (33 PTO hp)

Equipment for Base Machine

ENGINE:
Yanmar Liquid Cooled
TurboDiesel Engine
Interim Tier IV EPA Emmissions
Certified
Engine HP 40.2 (29.8 kW)**
PTO HP 32.5 (24.2 kW) HST
Rated Speed 2600 RPM
**Manufactures Estimate of
Power (ISO) per 97/68 EC
TRANSMISSION:
4-Wheel Drive
HST Transmission
Differential Lock
HYDRAULICS:
Dual Mid Selective Control
Valve with Joystick Control
Lever, Float, Regenerative
Function, and SCV Lockout
PTO:
Independent 540 RPM Rear PTO
Electronically Actuated
ELECTRICAL:
12-Volt Electrical System
40 Amp Alternator
Key Ignition Starter with
Accessory and Pre-Heat
Position
Maintenance Free Battery with
500 Cold Cranking Amps
OPERATOR PROTECTIVE STRUCTURE:
Adjustable High Back Vinyl Seat
with Spring Suspension
Fixed ROPS (Roll-Over
Protective Structure)
Meets ASAE S478 and OSHA 1928
ROPS Certification Standards
Operator Presence with Safety
Interlock System
BASE MACHINE (4WD):
R1 or R4 Tires

CODE	ATTACHMENT IDENTIFIER	DESCRIPTION	SUGGESTED LIST PRICE USD ($)

Select One Code From Each Required Category

BASE MACHINE

F.O.B. Grovetown, Georgia

1493LV	4105 Compact Utility Tractor (33 PTO hp)	21,674.00

Operator Station

1505	Open Station with Standard Seat	In Base Price

TRANSMISSION

2025	HST Transmission	In Base Price

Mid PTO

2500	Less Mid PTO	In Base Price

WHEELS WITH TIRES (TWO)

4555	8-16 6PR Front R1 Bar 14.9-24 8PR Rear R1 Bar	In Base Price
4560	10.00-16.5 6PR Front R4 Ind. 17.5L-24 8PR Rear R4 Ind.	432.00

SELECTIVE CONTROL VALVES

7010	Dual Mid Selective Control Valve	In Base Price

ATTACHMENTS - ORDER AS DESIRED

	Spanish North American Kit:	
9800	Spanish North American Operator's Manual and Decal Kit	No Charge

ATTACHMENTS FOR FIELD CONVERSION

4105 Compact Utility Tractor (33 PTO hp)

Continued

CODE	ATTACHMENT IDENTIFIER	DESCRIPTION	SUGGESTED LIST PRICE USD ($)
		ATTACHMENTS FOR FIELD CONVERSION Continued...	
		Engine:	
	AT118553	Air Cleaner Service Indicator (Donaldson)	See Parts
	AR87167	Engine Coolant Heater (110 Volt) *Diesel Engines Only.*	See Parts
	LVA13457	Spark Arrester Screen	See Parts
	LVB25884	Vertical Exhaust Kit	385.00
		Hitch:	
	LVB25308	Telescoping Draft Links	342.10
	LVU15507	iMatch Quick Hitch Bushings	See Parts
	LVB25255	iMatch Quick Hitch Category 1 *Bushings NOT included. Orderable through parts (LVU15507).*	315.70
	LVB25976	iMatch Quick Hitch Category 1 with adjustable top hook	350.90
		Hood Guards:	
	BW15783	Hood Guard (4105) *For Tractor serial numbers 1LV4105HKAH410001 and below For Tractors 1LV4105HKAH410001 and above use BW16040.*	251.90
	BW16040	Hood Guard (4105) *For Tractor serial numbers 1LV4105HKAH410001 and above. For Tractors 1LV4105HKAH410001 and below, use BW15783.*	251.90
		Hydraulics:	
	LVB26030	Electrohydraulic Third SCV Kit (Open Station Only) *For 3120-3720 and 4105 Tractors, Dual SCV is Standard. Starting with MY2011. Not backward compatible. See Sales Manual for MY2011 serial number break.*	1,112.10
	LVB25505	Power Beyond Kit (Open Station Only) *Includes Rear Mounted Hydraulic Couplers and Hoses for Use with Backhoe on 3120-3720, 4105 Open Station Tractors. Not compatible with MY2011 tractors. See sales manual for details.*	334.40
	LVB26064	Power Beyond Kit (Open Station Only) *Includes Rear Mounted Hydraulic Couplers and Hoses for Use with Backhoe on 3120-3720, 4105 Open Station Tractors. Starting with MY2011. Not backward compatible. See Sales Manual for MY2011 serial number break.*	412.50
		Lighting:	
	LVB25547	Auxiliary Rear Work Light Kit (1 Light) *Includes Wiring Harness. Not Compatible with Forward Lighting Kit (LVB25546). Not for use with Cab Tractors.*	62.70
	LVB25546	Forward Lighting Kit (2 Lights) *Requires Light Brush Guard Kit, LVB25016. Not Compatible with Rear Work Lighting Kit (LVB25547).*	95.70
	LVB25016	Warning Light Brush Guard Kit (Two Guards)	49.50
		Miscellaneous:	
	LVB25015	55 Amp Alternator	304.70
	LVB26021	Cruise Control Kit	304.70

4105 Compact Utility Tractor (33 PTO hp)

Continued

CODE	ATTACHMENT IDENTIFIER	DESCRIPTION	SUGGESTED LIST PRICE USD ($)
		ATTACHMENTS FOR FIELD CONVERSION Continued...	
	TY16202	Tire Chains *For Use with 17.5L-24 In. 8 (R4) Rear Tires*	See Parts
		Operator Environment:	
	LVB25334	Canopy - Standard *Requires LVB25332 Canopy Mounting Bracket and Hardware Kit.*	572.00
	LVB25332	Canopy Mounting Bracket and Hardware Kit	103.40
		Order Zone:	
	720969235	3-Point Hitch Tractor Receiver Hitch	In Catalog
	LP95333	ROPS Organizer	In Catalog
		Spanish North American Kit:	
	LVB25990	Spanish North American Operators Manual and Decal Kit *For 4105 Tractor*	68.20
	LVB26188	Spanish North American Operators Manual and Decal Kit	77.00
		Transmission:	
	AR94493	Transmission Oil Heater *Requires AR95434 Cord Set, R34557 Clamp and (2) R44302, Self Locking Straps.*	See Parts
		Weights:	
	BM19940	Attaching Hardware for Additional Rear Wheel Weight, 110 lb.	13.20
	LVBM19607	Front Quik-Tatch Weight Kit (3020 Series, 3203, 4105) *Includes Rod and Spring Pins for Front Quik-Tatch Weights.*	46.20
	LVBM19581	Front Weight Bracket Extension Kit (3203, 3020 Series, 4105) *Includes Extension Bracket and All Hardware (Including Rod and Spring Pins) to Hold up to Ten Front Quik-Tatch Weights.*	238.70
	R66949	Quik-Tatch Weight, 42 Lb. *Requires CH15318, Pin.*	62.06
	BM19780	Quik-Tatch Weight, 70 lb. *Requires (1) LVB24952.*	108.90
	T19293	Weight, Rear Wheel 110 Lb.	277.64
		Wheels and Tires Front:	
	BM19108	Two 2 Position Steel Wheels With 10-16.5 In. 6 PR (R4) Front Tires	949.30
		Wheels and Tires Rear:	
	LVB26029	Steel Wheels with 17.5L-24 6PR R4 Rear Tires	2,211.00

EXTENDED WARRANTY - RESIDENTIAL OWNERS/USE

Visit http://www.JohnDeere.com/ServicePlans for more information on John Deere Service Contracts. May not be Available in Parts of the U.S., Not Available in Canada. Price may vary due to driving distance and/or time from machine to dealership location.

4120 Compact Utility Tractor (35 - 37 PTO hp)

Equipment for Base Machine

ENGINE:
John Deere PowerTech
4 Cylinder Liquid Cooled
Turbocharged Diesel Engine
Interim Tier IV EPA Emmissions
Certified
Engine HP 43.0 (31.6 kW)**
PTO HP 37.0 (27.6 kW)PRT
PTO HP 35.0 (26.1 kW) HST
Rated Speed 2400 RPM
**Manufacturers Estimate of
Power (ISO) per 97/68 EC

TRANSMISSION:
PowrReverser Transmission:
Synchronized - 12 Speeds
Forward, 12 Speeds Reverse
Dual Multi-Disk Wet Clutches
Differential Lock
4-Wheel Drive

HYDRAULICS:
Dual Mid Selective Control
Valve with Joystick Control
Lever, Float, Regenerative
Function, and SCV and
Regenerative Lockout

INSTRUMENTATION:
Performance Tracking System
Diagnostic Control Panel
Hour Meter
Speedometer (eHydro only)
MotionMatch (eHydro only)
LoadMatch (eHydro only)

ELECTRICAL:
12-Volt Electrical System
70 Amp Alternator
Key Ignition Starter with
Accessory and Pre-Heat
Position
Wet Battery with 770
Cold Cranking Amps

OPERATOR PROTECTIVE STRUCTURE:
Deluxe Adjustable Vinyl Seat
with Retractable Seat Belt
Folding ROPS (Roll-Over
Protective Structure)
Meets SAE J2194 and OSHA
1928 ROPS Certification
Standards for North America
and Europe
Isolated Foot Rest
Operator Presence with
Safety Interlock

BASE MACHINE (4WD):
Two 8 Position Steel Wheels
with 13.6-28 4PR (R1)
Rear Tires
Two 2 Position Steel Wheels
with 8-16 6PR (R1)
Front Tires

CODE	ATTACHMENT IDENTIFIER	DESCRIPTION	SUGGESTED LIST PRICE USD ($)
		Select One Code From Each Required Category	
		BASE MACHINE	
		F.O.B. Grovetown, Georgia	
6835LV		4120 Compact Utility Tractor (35 - 37 PTO hp)	27,405.00
		OPERATOR STATION	
1505		Open Station with Standard Seat	In Base Price
		TRANSMISSION	
2015		12F/12R PowrReverser *Not Available on Cab Tractors.*	In Base Price
2025		eHydro	1,475.00
		WHEELS WITH TIRES (TWO)	
4540		27x10.5-15 4PR Front R3 Turf 2 Pos. Bias 44X18.0-20 4PR Rear R3 Turf 2 Pos. Bias	204.00
4550		8-16 6PR Front R1 2 Pos. Bias 13.6-28 4PR Rear R1 Bar 8 Pos. Bias	In Base Price
4580		10-16.5 6PR Front R4 Ind. 2 Pos. Bias 16.9L-24 6PR Rear R4 Ind. 2 Pos. Bias	477.00
4565		27-12LL-15 6PR Front R3 Turf Special 2 Pos. Bias 22.5LL-16.1 6PR Rear R3 Turf Special 2 Pos. Bias	1,679.00

4120 Compact Utility Tractor (35 - 37 PTO hp)

Continued

CODE	ATTACHMENT IDENTIFIER	DESCRIPTION	SUGGESTED LIST PRICE USD ($)
		SELECTIVE CONTROL VALVES	
7010		Dual Mid SCV	In Base Price
		ATTACHMENTS - ORDER AS DESIRED	
		Operator Environment:	
		Spanish North American Kit:	
9800		Spanish North American Operator's Manual and Decal Kit	No Charge
		ATTACHMENTS FOR FIELD CONVERSION	
		Engine:	
	LVA13458	Spark Arrester Screen	See Parts
	LVB25561	Vertical Exhaust Kit *PRT Serial #(- 615000), HST Serial #(- 610000).*	232.10
	LVB25765	Vertical Exhaust Kit *PRT Serial #(615001 -), HST Serial #(610001 -).*	386.10
	RE51650	Water Separator Clear Bowl	See Parts
		Fenders:	
	LVB25685	Front Fender Kit	521.40
	LVB25683	Rear Fender Extension Kit (Open Station Only)	272.80
		Hitch:	
	LVB25309	Telescoping Draft Links	378.40
	LVB25255	iMatch Quick Hitch Category 1 *Bushings NOT included. Orderable through parts (LVU15507).*	315.70
	LVB25976	iMatch Quick Hitch Category 1 with adjustable top hook	350.90
		Hood Guards:	
	BW15222	Deluxe Hood Guard Attachment	316.80
	BW15221	Hood Guard (4120-4720)	251.90
		Hydraulics:	
	LVB26072	4th & 5th Electrohydraulic SCV Kit (Cab Only) *Includes Rear Mounted Couplers, Hydraulic Lines and SCV Lever. Starting with MY2011. Not backward compatible. See Sales Manual for MY2011 serial number break. Also see SCV Options Table under Notes for the appropriate parts needed for installation.*	1,365.10
	LVB26037	4th & 5th Selective Control Valve Kit (Open Station Only) *Includes Rear Mounted Couplers, Hydraulic Lines and SCV Lever. Starting with MY2011. Not backward compatible. See Sales Manual for MY2011 serial number break.*	852.50
	LVB25511	Electric Diverter Kit (Open Station Only) *Includes Two Additional SCV's (Either Third and Fourth or Fourth and Fifth) Not compatible with MY2011 tractors. See sales manual for details.*	1,478.40
	LVB26077	Electric Diverter Kit (Open Station Only) *Includes two additional SCV's.*	1,478.40

4120 Compact Utility Tractor (35 - 37 PTO hp)
Continued

CODE	ATTACHMENT IDENTIFIER	DESCRIPTION	SUGGESTED LIST PRICE USD ($)
		ATTACHMENTS FOR FIELD CONVERSION Continued...	
	LVB26032	Electrohydraulic Third SCV Kit (Open Station Only) *Includes Rear Mounted Couplers, Hydraulic Lines and SCV Lever. Starting with MY2011. Not backward compatible. See Sales Manual for MY2011 serial number break.*	1,112.10
	LVB25512	Power Beyond Kit (Open Station Only) *Includes Rear Mounted Hydraulic Couplers and Hose for Use with Backhoe on 4510-4710 and 4120-4720 Open Station Tractors. Not compatible with MY2011 tractors. See sales manual for details.*	317.90
	LVB26066	Power Beyond Kit (Open Station Only) *Includes Rear Mounted Hydraulic Couplers and Hose for Use with Backhoe on 4510-4710 and 4120-4720 Open Station Tractors. Starting with MY2011. Not backward compatible. See Sales Manual for MY2011 serial number break.*	412.50
	LVB25513	Third Selective Control Valve Kit (Open Station Only) *Includes Rear Mounted Couplers, Hydraulic Lines and SCV Lever. Not compatible with MY2011 or older tractors. See sales manual for details.*	278.30
	LVB25312	Top and Tilt Field Kit *Requires Electric Diverter Kit. For 4120, 4320 and 4520 MY2011 and prior.*	1,125.30
	LVB26161	Top and Tilt Field Kit *Requires Electric Diverter Kit. Prior to MY2011 order LVB25312.*	1,236.40
		Kits and Accessories:	
	RE527545	Engine Block Heater	See Parts
		Lighting:	
	LVB25547	Auxiliary Rear Work Light Kit (1 Light) *Includes Wiring Harness. Not Compatible with Forward Lighting Kit (LVB25546). Not for use with Cab Tractors.*	62.70
	LVB25546	Forward Lighting Kit (2 Lights) *Requires Light Brush Guard Kit, LVB25236. Open Station Only.*	95.70
	LVB25236	Warning Light Brush Guard Kit (Two Guards) *Open Station Only.*	61.60
		Miscellaneous:	
	LVB25960	7-Pin Trailer Connector (Open Station)	271.70
	LVB25866	Automotive Style Cruise, Load Match, Speed Match, and Upgraded Motion Match Switch	112.20
	LVB25607	Back-up Alarm Kit *Requires eHydro Transmission Option.*	126.50
	TY15201	Tire Chains *For Use with 10-16.5 In. 6 PR (R4) Front Tires*	See Parts
	TY15988	Tire Chains *For Use with 44X18.00-20 In. 4PR (R3) Rear Tires*	See Parts
	TY16202	Tire Chains *For Use with 17.5L-24 In. 8 (R4) Rear Tires*	See Parts

4120 Compact Utility Tractor (35 - 37 PTO hp)
Continued

CODE	ATTACHMENT IDENTIFIER	DESCRIPTION	SUGGESTED LIST PRICE USD ($)
		ATTACHMENTS FOR FIELD CONVERSION Continued...	
	TY4462	Tire Chains *For Use with 13.6-28 In. 4PR (R1) Rear Tires.*	See Parts
	LVB24865	Tool Box Kit	165.00
		Operator Environment:	
	LVB25688	Air Seat Suspension Kit (Open Station Only) *Includes Air Ride Suspension Only. Used with Seat that Ships With Tractor.*	657.80
	LVB25334	Canopy - Standard	572.00
	LVB25332	Canopy Mounting Bracket and Hardware Kit	103.40
	LVB25501	Seat Armrest Kit *Open Station Only, Standard on Cab Tractors.*	140.80
	TY25324	Weather Protection Umbrella	See Parts
		Order Zone:	
	720969235	3-Point Hitch Tractor Receiver Hitch	In Catalog
	LP95233	Large Seat Cover	In Catalog
	LP95333	ROPS Organizer	In Catalog
		PTO:	
	LVB25959	Mid PTO Kit *4X20 Tractors with SN ending in 916000 (OOS) and 946000 (Cab) are NOT compatible with mid-mount mowers.* *Cab Tractors Require LVB24847 Mid PTO Controls.*	740.30
		Spanish North American Kit:	
	LVB25996	Spanish North American Operator's Manual and Decal Kit *Cab Tractors.* *For 4120, 4320 and 4520 Tractors*	78.10
	LVB26186	Spanish North American Operator's Manual and Decal Kit *Cab Tractors.*	80.30
	LVB25988	Spanish North American Operators Manual and Decal Kit *Open Station Tractors.* *For 4120, 4320 and 4520 Tractors*	62.70
	LVB26185	Spanish North American Operators Manual and Decal Kit *Open Station Tractors.*	64.90
		Transmission:	
	LVB25865	PRT Oil Cooler Kit	280.50
	AR94493	Transmission Oil Heater *Requires AR95434 Cord Set, R34557 Clamp and (2) R44302, Self Locking Straps.*	See Parts
		Weights:	
	BM19940	Attaching Hardware for Additional Rear Wheel Weight, 110 lb.	13.20
	BM19937	Attaching Hardware for Additional Rear Wheel Weight, 55 Lb.	9.90

4120 Compact Utility Tractor (35 - 37 PTO hp)
Continued

CODE	ATTACHMENT IDENTIFIER	DESCRIPTION	SUGGESTED LIST PRICE USD ($)
		ATTACHMENTS FOR FIELD CONVERSION Continued...	
	BM19939	Attaching Hardware for Starter Rear Wheel Weight, 110 lb.	36.30
	LVB25004	Attaching Hardware for Starter Rear Wheel Weight, 55 Lb.	52.80
	LVB25705	Front Quik-Tatch Weight Kit (4020 Series) *Includes Rod and Spring Pins for Front Quik-Tatch Weights.*	44.00
	LVBM19596	Front Weight Bracket Extension Kit (4020 Series) *Includes Extension Bracket and All Hardware (Including Rod and Spring Pins) to Hold up to Twelve Front Quik-Tatch Weights.*	255.20
	R66949	Quik-Tatch Weight, 42 Lb. *Requires (1) LVB25705, Front Weight Pin Kit.*	62.06
	BM19780	Quik-Tatch Weight, 70 lb. *Requires (1) LVB25705, Front Quik-Tatch Weight Kit.*	108.90
	BM17968	Rear Wheel Weight, 55 Lb. *Starter and Additional Weight for 19.5 and 20 In. Wheel.*	140.80
	T19293	Weight, Rear Wheel 110 Lb. *Starter and Additional Weight for 24 and 28 In. Wheel.*	277.64
		Wheels and Tires Front:	
	BM19108	Two 2 Position Steel Wheels With 10-16.5 In. 6 PR (R4) Front Tires	949.30
	LVB25007	Two 2 Position Steel Wheels With 27-12LL-15 In. 6 PR (R3) Turf Special Front Tires	1,080.20
	BM19083	Two 2 Position Steel Wheels With 8-16 In. 6 PR (R1) Front Tires	678.70
	LVB25108	Two 2 Position Steel Wheels with 27X10.50-15 In. 4PR (R3) Front Tires	606.10
		Wheels and Tires Rear:	
	LVB25981	Two 2 Position Steel Wheels With 17.5L-24 In. 6PR (R4) Rear Tires	2,261.60
	BM19208	Two 2 Position Steel Wheels With 22.5LL-16.1 In. 6 PR (R3) Turf Special Rear Tires	3,687.20
	LVB25000	Two 2 Position Steel Wheels With 44X18.00-20 In. 4 PR (R3) Rear Tires	2,248.40
	BLV10328	Two 2 Position Steel Wheels With 16.9L-24 In. 6PR (R4) Rear Tires	3,064.60
	BM19113	Two 8 Position Steel Wheels With 13.6-28 In. 4PR (R1) Rear Tires	1,916.20

4320 Compact Utility Tractor (40 PTO hp)

Equipment for Base Machine

ENGINE:
John Deere PowerTech
4 Cylinder Liquid Cooled
Turbocharged Diesel Engine
Interim Tier IV EPA Emmissions
Certified
Engine HP 48.0 (35.3 kW)**
PTO HP 39.9 (29.8 kW)
Rated Engine Speed 2400 RPM
**Manufacturers Estimate of
Power
(ISO) per 97/68 EC

TRANSMISSION:
PowrReverser Transmission:
Synchronized - 12 Speeds
Forward, 12 Speeds Reverse
Dual Multi-Disk Wet Clutches
Differential Lock
4-Wheel Drive

HYDRAULICS:
Dual Mid Selective Control
Valve with Joystick Control
Lever, Float, Regenerative
Function, and SCV and
Regenerative Lockout

INSTRUMENTATION:
Performance Tracking System
Diagnostic Control Panel
Hour Meter
Speedometer (eHydro only)
MotionMatch (eHydro only)
LoadMatch (eHydro only)

ELECTRICAL:
12-Volt Electrical System
70 Amp Alternator
Key Ignition Starter with
Accessory and Pre-Heat
Position
Wet Battery with 770
Cold Cranking Amps

OPERATOR PROTECTIVE STRUCTURE:
Deluxe Adjustable Vinyl Seat
with Retractable Seat Belt
Folding ROPS (Roll-Over
Protective Structure)
Meets SAE J2194 and OSHA
1928 ROPS Certification
Standards for North America
and Europe
Isolated Foot Rest
Operator Presence with
Safety Interlock

CAB:
12 Volt Auxilary Power Outlet
Air Conditioning and Heater
Armrests
Cell Phone Holder
Deluxe Fabric Covered Seat with
Retractable Seat Belt
Dual Forward Work Lights
Two Speed Front Windshield
Wiper/Washer
Fully Isolated Deluxe Cab
High Impact Polymer Fenders with
Integrated Tail Lights
Radio Preparation (w/antenna,
speakers,
wiring, media player storage
slot
Molded Rubber Floormat
Operator Manual Holder
Rearview Mirror (inside)
Monitor Bosses (2 sets)
Right Hand and Left Hand Console
Storage
Right Hand Control Center
Sealed Quiet Cabin
Sun visor
Swing-Out Rear
Window w/removable
plug for monitor or controller
harnesses
Tilt Steering
Two Front/Two Rear Roof Mounted
Warning Lights

BASE MACHINE (4WD):
Two 8 Position Steel Wheels
with 13.6-28 4PR (R1)
Rear Tires
Two 2 Position Steel Wheels
with 8-16 6PR (R1)
Front Tires

CODE	ATTACHMENT IDENTIFIER	DESCRIPTION	SUGGESTED LIST PRICE USD ($)

Select One Code From Each Required Category

BASE MACHINE

F.O.B. Grovetown, Georgia

6845LV	4320 Compact Utility Tractor (40 PTO hp)	29,700.00

OPERATOR STATION

1505	Open Station with Standard Seat	In Base Price
1510	Cab with Standard Seat *Requires Option Codes 2025 (eHydro) and 7010 (Mid DSCV).*	7,529.00

TRANSMISSION

2015	12F/12R PowrReverser *Not Available on Cab Tractors.*	In Base Price
2025	eHydro	1,639.00

4320 Compact Utility Tractor (40 PTO hp)

Continued

CODE	ATTACHMENT IDENTIFIER	DESCRIPTION	SUGGESTED LIST PRICE USD ($)
		WHEELS WITH TIRES (TWO)	
4540		27x10.5-15 4PR Front R3 Turf 2 Pos. Bias 44X18.0-20 4PR Rear R3 Turf 2 Pos. Bias	204.00
4550		8-16 6PR Front R1 2 Pos. Bias 13.6-28 4PR Rear R1 Bar 8 Pos. Bias	In Base Price
4580		10-16.5 6PR Front R4 Ind. 2 Pos. Bias 16.9L-24 6PR Rear R4 Ind. 2 Pos. Bias	477.00
4565		27-12LL-15 6PR Front R3 Turf Special 2 Pos. Bias 22.5LL-16.1 6PR Rear R3 Turf Special 2 Pos. Bias	1,679.00
		SELECTIVE CONTROL VALVES	
7010		Dual Mid SCV	In Base Price
7030		Dual Mid & Single Electrohydraulic Rear SCV *Available only as dealer-installed option on 4320-4720 Cab Tractors.*	934.00
		ATTACHMENTS - ORDER AS DESIRED	
		Operator Environment:	
9520		Factory Installed Stereo (Jensen Receiver, Weather Band, Auxiliary Port, and iPod compatibility)	480.00
		Spanish North American Kit:	
9800		Spanish North American Operator's Manual and Decal Kit	No Charge
		ATTACHMENTS FOR FIELD CONVERSION	
		Engine:	
	LVA13458	Spark Arrester Screen	See Parts
	LVB25561	Vertical Exhaust Kit *PRT Serial #(- 630000), HST Serial #(- 620000).*	232.10
	LVB25765	Vertical Exhaust Kit *PRT Serial #(630001 -), HST Serial #(620001 -).*	386.10
	RE51650	Water Separator Clear Bowl	See Parts
		Fenders:	
	LVB25685	Front Fender Kit	521.40
	LVB24860	Rear Fender Extension Kit (Cab Only)	259.60
	LVB25683	Rear Fender Extension Kit (Open Station Only)	272.80
		Hitch:	
	LVB25309	Telescoping Draft Links	378.40
	LVB25255	iMatch Quick Hitch Category 1 *Bushings NOT included. Orderable through parts (LVU15507).*	315.70
	LVB25976	iMatch Quick Hitch Category 1 with adjustable top hook	350.90

4320 Compact Utility Tractor (40 PTO hp)
Continued

CODE	ATTACHMENT IDENTIFIER	DESCRIPTION	SUGGESTED LIST PRICE USD ($)
		ATTACHMENTS FOR FIELD CONVERSION Continued...	
		Hood Guards:	
	BW15222	Deluxe Hood Guard Attachment	316.80
	BW15221	Hood Guard (4120-4720)	251.90
		Hydraulics:	
	LVB26072	4th & 5th Electrohydraulic SCV Kit (Cab Only) *Includes Rear Mounted Couplers, Hydraulic Lines and SCV Lever. Starting with MY2011. Not backward compatible. See Sales Manual for MY2011 serial number break. Also see SCV Options Table under Notes for the appropriate parts needed for installation.*	1,365.10
	LVB26037	4th & 5th Selective Control Valve Kit (Open Station Only) *Includes Rear Mounted Couplers, Hydraulic Lines and SCV Lever. Starting with MY2011. Not backward compatible. See Sales Manual for MY2011 serial number break.*	852.50
	LVB24855	Electric Diverter Kit (Cab Only) *Includes Two Additional SCV's (Either Third and Fourth or Fourth and Fifth) Not compatible with MY2011 and later tractors. See sales manual for details.*	1,478.40
	LVB25511	Electric Diverter Kit (Open Station Only) *Includes Two Additional SCV's (Either Third and Fourth or Fourth and Fifth) Not compatible with MY2011 tractors. See sales manual for details.*	1,478.40
	LVB26077	Electric Diverter Kit (Open Station Only) *Includes two additional SCV's.*	1,478.40
	LVB26033	Electrohydraulic Third SCV Kit (Cab Only) *Includes Rear Mounted Couplers, Hydraulic Lines and SCV Lever. Starting with MY2011. Not backward compatible. See Sales Manual for MY2011 serial number break.*	1,112.10
	LVB26032	Electrohydraulic Third SCV Kit (Open Station Only) *Includes Rear Mounted Couplers, Hydraulic Lines and SCV Lever. Starting with MY2011. Not backward compatible. See Sales Manual for MY2011 serial number break.*	1,112.10
	LVB26078	Electronic Diverter Kit (Cab Only) *Includes two additional SCV's.*	1,478.40
	LVB25780	Power Beyond Kit (Cab Only) *Not compatible with MY2011 tractors. See sales manual for details.*	336.60
	LVB26071	Power Beyond Kit (Cab Only) *Starting with MY2011. Not backward compatible. See Sales Manual for MY2011 serial number break.*	412.50
	LVB25512	Power Beyond Kit (Open Station Only) *Includes Rear Mounted Hydraulic Couplers and Hose for Use with Backhoe on 4510-4710 and 4120-4720 Open Station Tractors. Not compatible with MY2011 tractors. See sales manual for details.*	317.90
	LVB26066	Power Beyond Kit (Open Station Only) *Includes Rear Mounted Hydraulic Couplers and Hose for Use with Backhoe on 4510-4710 and 4120-4720 Open Station Tractors. Starting with MY2011. Not backward compatible. See Sales Manual for MY2011 serial number break.*	412.50

4320 Compact Utility Tractor (40 PTO hp)
Continued

CODE	ATTACHMENT IDENTIFIER	DESCRIPTION	SUGGESTED LIST PRICE USD ($)
		ATTACHMENTS FOR FIELD CONVERSION Continued...	
	LVB24848	Third Selective Control Valve Kit (Cab Only) *Includes Rear Mounted Couplers, Hydraulic Lines and SCV Lever. Not compatible with MY2011 or older tractors. See sales manual for details.*	278.30
	LVB25513	Third Selective Control Valve Kit (Open Station Only) *Includes Rear Mounted Couplers, Hydraulic Lines and SCV Lever. Not compatible with MY2011 or older tractors. See sales manual for details.*	278.30
	LVB25312	Top and Tilt Field Kit *Requires Electric Diverter Kit. For 4120, 4320 and 4520 MY2011 and prior.*	1,125.30
	LVB26161	Top and Tilt Field Kit *Requires Electric Diverter Kit.* *Prior to MY2011 order LVB25312.*	1,236.40
		Kits and Accessories:	
	RE527545	Engine Block Heater	See Parts
		Lighting:	
	LVB25547	Auxiliary Rear Work Light Kit (1 Light) *Includes Wiring Harness. Not Compatible with Forward Lighting Kit (LVB25546). Not for use with Cab Tractors.*	62.70
	LVB24852	Beacon Light Kit (Cab Only)	236.50
	LVB25546	Forward Lighting Kit (2 Lights) *Requires Light Brush Guard Kit, LVB25236.* *Open Station Only.*	95.70
	LVB24853	Rear Work Light Kit (2 Lights) (Cab Only) *Cab is Pre-Wired.*	150.70
	LVB25236	Warning Light Brush Guard Kit (Two Guards) *Open Station Only.*	61.60
		Miscellaneous:	
	LVB25971	7-Pin Trailer Connector (Cab) *Serial # (H620553 -)*	107.80
	LVB25960	7-Pin Trailer Connector (Open Station)	271.70
	LVB25866	Automotive Style Cruise, Load Match, Speed Match, and Upgraded Motion Match Switch	112.20
	LVB25607	Back-up Alarm Kit *Requires eHydro Transmission Option.*	126.50
	LVB24851	Horn Kit (Cab Only)	47.30
	TY15201	Tire Chains *For Use with 10-16.5 In. 6 PR (R4) Front Tires*	See Parts
	TY15988	Tire Chains *For Use with 44X18.00-20 In. 4PR (R3) Rear Tires*	See Parts
	TY16202	Tire Chains *For Use with 17.5L-24 In. 8 (R4) Rear Tires*	See Parts

4320 Compact Utility Tractor (40 PTO hp)
Continued

CODE	ATTACHMENT IDENTIFIER	DESCRIPTION	SUGGESTED LIST PRICE USD ($)
		ATTACHMENTS FOR FIELD CONVERSION Continued...	
	TY4462	Tire Chains *For Use with 13.6-28 In. 4PR (R1) Rear Tires.*	See Parts
	LVB24865	Tool Box Kit	165.00
		Operator Environment:	
	LVB24983	Air Seat Suspension Kit (Cab Only)	723.80
	LVB25688	Air Seat Suspension Kit (Open Station Only) *Includes Air Ride Suspension Only. Used with Seat that Ships With Tractor.*	657.80
	LVB26065	Cab Speaker and Radio Mount Kit *Cab Only. Compatible only with MY2010 or previous models. See sales manual for details.*	90.20
	LVB25334	Canopy - Standard	572.00
	LVB25332	Canopy Mounting Bracket and Hardware Kit	103.40
	LVB24876	Cigarette Lighter/Ashtray Kit (Cab Only) *For 3320, 3520, 3720, 4320, 4520 and 4720 Tractors.*	47.30
	LVB24844	External Mirror Kit (Cab Only)	184.80
	LVB24856	Rear Wiper Kit (Cab Only)	280.50
	LVB25501	Seat Armrest Kit *Open Station Only, Standard on Cab Tractors.*	140.80
	SWJHD1620	Stereo with AM/FM, Weatherband, SIRIUS Satellite and iPod Ready *Stereo included with option Code 9520 when configuring Tractor.*	See Parts
	TY25324	Weather Protection Umbrella	See Parts
		Order Zone:	
	720969235	3-Point Hitch Tractor Receiver Hitch	In Catalog
	LP95233	Large Seat Cover	In Catalog
	LP95333	ROPS Organizer	In Catalog
		PTO:	
	LVB24847	Mid PTO Controls (Cab Only)	171.60
	LVB25959	Mid PTO Kit *4X20 Tractors with SN ending in 916000 (OOS) and 946000 (Cab) are NOT compatible with mid-mount mowers.* *Cab Tractors Require LVB24847 Mid PTO Controls.*	740.30
		Spanish North American Kit:	
	LVB25996	Spanish North American Operator's Manual and Decal Kit *Cab Tractors.* *For 4120, 4320 and 4520 Tractors*	78.10
	LVB26186	Spanish North American Operator's Manual and Decal Kit *Cab Tractors.*	80.30

4320 Compact Utility Tractor (40 PTO hp)
Continued

CODE	ATTACHMENT IDENTIFIER	DESCRIPTION	SUGGESTED LIST PRICE USD ($)
		ATTACHMENTS FOR FIELD CONVERSION Continued...	
	LVB25988	Spanish North American Operators Manual and Decal Kit *Open Station Tractors.* *For 4120, 4320 and 4520 Tractors*	62.70
	LVB26185	Spanish North American Operators Manual and Decal Kit *Open Station Tractors.*	64.90
		Transmission:	
	LVB25865	PRT Oil Cooler Kit	280.50
	AR94493	Transmission Oil Heater *Requires AR95434 Cord Set, R34557 Clamp and (2) R44302, Self Locking Straps.*	See Parts
		Vandal Protection:	
	AL113087	Vandal Protection, Lockable Fuel Tank Cap *Cab Only.*	See Parts
		Weights:	
	BM19940	Attaching Hardware for Additional Rear Wheel Weight, 110 lb.	13.20
	BM19937	Attaching Hardware for Additional Rear Wheel Weight, 55 Lb.	9.90
	BM19939	Attaching Hardware for Starter Rear Wheel Weight, 110 lb.	36.30
	LVB25004	Attaching Hardware for Starter Rear Wheel Weight, 55 Lb.	52.80
	LVB25705	Front Quik-Tatch Weight Kit (4020 Series) *Includes Rod and Spring Pins for Front Quik-Tatch Weights.*	44.00
	LVBM19596	Front Weight Bracket Extension Kit (4020 Series) *Includes Extension Bracket and All Hardware (Including Rod and Spring Pins) to Hold up to Twelve Front Quik-Tatch Weights.*	255.20
	R66949	Quik-Tatch Weight, 42 Lb. *Requires (1) LVB25705, Front Weight Pin Kit.*	62.06
	BM19780	Quik-Tatch Weight, 70 lb. *Requires (1) LVB25705, Front Quik-Tatch Weight Kit.*	108.90
	BM17968	Rear Wheel Weight, 55 Lb. *Starter and Additional Weight for 19.5 and 20 In. Wheel.*	140.80
	T19293	Weight, Rear Wheel 110 Lb. *Starter and Additional Weight for 24 and 28 In. Wheel.*	277.64
		Wheels and Tires Front:	
	BM19108	Two 2 Position Steel Wheels With 10-16.5 In. 6 PR (R4) Front Tires	949.30
	LVB25007	Two 2 Position Steel Wheels With 27-12LL-15 In. 6 PR (R3) Turf Special Front Tires	1,080.20
	BM19083	Two 2 Position Steel Wheels With 8-16 In. 6 PR (R1) Front Tires	678.70
	LVB25108	Two 2 Position Steel Wheels with 27X10.50-15 In. 4PR (R3) Front Tires	606.10
		Wheels and Tires Rear:	

4320 Compact Utility Tractor (40 PTO hp)

Continued

CODE	ATTACHMENT IDENTIFIER	DESCRIPTION	SUGGESTED LIST PRICE USD ($)
		ATTACHMENTS FOR FIELD CONVERSION Continued...	
	LVB25981	Two 2 Position Steel Wheels With 17.5L-24 In. 6PR (R4) Rear Tires	2,261.60
	BM19208	Two 2 Position Steel Wheels With 22.5LL-16.1 In. 6 PR (R3) Turf Special Rear Tires	3,687.20
	LVB25000	Two 2 Position Steel Wheels With 44X18.00-20 In. 4 PR (R3) Rear Tires	2,248.40
	BLV10328	Two 2 Position Steel Wheels With 16.9L-24 In. 6PR (R4) Rear Tires	3,064.60
	BM19113	Two 8 Position Steel Wheels With 13.6-28 In. 4PR (R1) Rear Tires	1,916.20

4520 Compact Utility Tractor (50 - 52 PTO)

Equipment for Base Machine

ENGINE:
John Deere PowerTech
4 Cylinder Liquid Cooled
Turbocharged Diesel Engine
Interim Tier IV EPA Emmissions
Certified
Engine HP 60.0 (44.1 kW)**
PTO HP 50.0 (37.3 kW) HST
PTO HP 52.0 (38.8 kW) PRT
Rated Speed 2400 RPM
**Manufacturer's Estimate of
Power (ISO) Per 97/68 EC

TRANSMISSION:
PowrReverser Transmission:
Synchronized - 12 Speeds
Forward, 12 Speeds Reverse
Dual Multi-Disk Wet Clutches
Differential Lock
4-Wheel Drive

HYDRAULICS:
Dual Mid Selective Control
Valve with Joystick Control
Lever, Float, Regenerative
Function, and SCV and
Regenerative Lockout

INSTRUMENTATION:
Performance Tracking System
Diagnostic Control Panel
Hour Meter
Speedometer (eHydro only)
MotionMatch (eHydro only)
LoadMatch (eHydro only)

ELECTRICAL:
12-Volt Electrical System
70 Amp Alternator
Key Ignition Starter with
Accessory and Pre-Heat
Position
Wet Battery with 770
Cold Cranking Amps

OPERATOR PROTECTIVE STRUCTURE:
Deluxe Adjustable Vinyl Seat
with Retractable Seat Belt
Folding ROPS (Roll-Over
Protective Structure)
Meets SAE J2194 and OSHA
1928 ROPS Certification
Standards for North America
and Europe
Isolated Foot Rest
Operator Presence with
Safety Interlock

CAB:
12 Volt Auxilary Power Outlet
Air Conditioning and Heater
Armrests
Cell Phone Holder
Deluxe Fabric Covered Seat with
Retractable Seat Belt
Dual Forward Work Lights
Exclusive Raised Header Bar
Two Speed Front Windshield
Wiper/Washer
Fully Isolated Deluxe Cab
High Impact Polymer Fenders with
Integrated Tail Lights
Radio Preparation (w/antenna,
speakers,
wiring, media player storage
slot)
Molded Rubber Floormat
Operator Manual Holder
Rearview Mirror (inside)
Monitor Mounting Bosses (2 sets)
Right Hand and Left Hand Console
Storage
Right Hand Control Center
Sealed Quiet Cabin
Sun visor
Swing-Out Rear
Window w/removable
rear plug for monitor or
controller
wiring harnesses
Tilt Steering
Two Front/Two Rear Roof Mounted
Warning Lights

BASE MACHINE (4WD):
Two 8 Position Steel Wheels
with 13.6-28 4PR (R1)
Rear Tires
Two 2 Position Steel Wheels
with 8-16 6PR (R1)
Front Tires

CODE	ATTACHMENT IDENTIFIER	DESCRIPTION	SUGGESTED LIST PRICE USD ($)

Select One Code From Each Required Category

BASE MACHINE

F.O.B. Grovetown, Georgia

6855LV	4520 Compact Utility Tractor (50 - 52 PTO)	31,667.00

OPERATOR STATION

1505	Open Station with Standard Seat	In Base Price
1510	Cab with Standard Seat *Requires Transmission Option Codes 2025 (eHydro) or 2045 (eHydro with 540/540E PTO) and SCV Option Code 7010 (Mid DSCV).*	7,529.00

TRANSMISSION

2015	12F/12R PowrReverser	In Base Price
2025	eHydro	1,857.00

4520 Compact Utility Tractor (50 - 52 PTO)

Continued

CODE	ATTACHMENT IDENTIFIER	DESCRIPTION	SUGGESTED LIST PRICE USD ($)
		TRANSMISSION Continued...	
2045		eHydro with 540/540E PTO *Option Codes 2045 (eHydro with 540/540E PTO), 7010 (Dual Mid SCV) and 7030 (Dual Mid and Single Electrohydraulic Rear SCV) Not Available on Open Station Tractors.*	2,404.00
2055		12F/12R Power Reverser with 540/540E PTO *Option Code 2055 (12F/12R Power Reverser with 540/540E PTO), 7010 (Dual Mid SCV) and 7030 (Dual Mid and Single Electrohydraulic Rear SCV) Not Available on Open Station Tractors.*	536.00
		WHEELS WITH TIRES (TWO)	
4540		27x10.5-15 4PR Front R3 Turf 2 Pos. Bias 44X18.0-20 4PR Rear R3 Turf 2 Pos. Bias	204.00
4550		8-16 6PR Front R1 2 Pos. Bias 13.6-28 4PR Rear R1 Bar 8 Pos. Bias	In Base Price
4580		10-16.5 6PR Front R4 Ind. 2 Pos. Bias 16.9L-24 6PR Rear R4 Ind. 2 Pos. Bias	477.00
4565		27-12LL-15 6PR Front R3 Turf Special 2 Pos. Bias 22.5LL-16.1 6PR Rear R3 Turf Special 2 Pos. Bias	1,679.00
		SELECTIVE CONTROL VALVES	
7010		Dual Mid SCV	In Base Price
7030		Dual Mid & Single Electrohydraulic Rear SCV *Available only as dealer-installed option on 4320-4720 Cab Tractors.*	934.00
		ATTACHMENTS - ORDER AS DESIRED	
		Operator Environment:	
9520		Factory Installed Stereo (Jensen Receiver, Weather Band, Auxiliary Port, and iPod compatibility)	480.00
		Spanish North American Kit:	
9800		Spanish North American Operator's Manual and Decal Kit	No Charge
		ATTACHMENTS FOR FIELD CONVERSION	
		Engine:	
	LVA13458	Spark Arrester Screen	See Parts
	LVB25561	Vertical Exhaust Kit *PRT Serial #(- 655000), HST Serial #(- 650000).*	232.10
	LVB25765	Vertical Exhaust Kit *PRT Serial #(655001 -), HST Serial #(650001 -).*	386.10
	RE51650	Water Separator Clear Bowl	See Parts
		Fenders:	
	LVB25685	Front Fender Kit	521.40

4520 Compact Utility Tractor (50 - 52 PTO)
Continued

CODE	ATTACHMENT IDENTIFIER	DESCRIPTION	SUGGESTED LIST PRICE USD ($)
		ATTACHMENTS FOR FIELD CONVERSION Continued...	
	LVB24860	Rear Fender Extension Kit (Cab Only)	259.60
	LVB25683	Rear Fender Extension Kit (Open Station Only)	272.80
		Hitch:	
	LVB25309	Telescoping Draft Links	378.40
	LVB25255	iMatch Quick Hitch Category 1 *Bushings NOT included. Orderable through parts (LVU15507).*	315.70
	LVB25976	iMatch Quick Hitch Category 1 with adjustable top hook	350.90
		Hood Guards:	
	BW15222	Deluxe Hood Guard Attachment	316.80
	BW15221	Hood Guard (4120-4720)	251.90
		Hydraulics:	
	LVB26072	4th & 5th Electrohydraulic SCV Kit (Cab Only) *Includes Rear Mounted Couplers, Hydraulic Lines and SCV Lever. Starting with MY2011. Not backward compatible. See Sales Manual for MY2011 serial number break. Also see SCV Options Table under Notes for the appropriate parts needed for installation.*	1,365.10
	LVB26037	4th & 5th Selective Control Valve Kit (Open Station Only)	852.50
	LVB24855	Electric Diverter Kit (Cab Only) *Includes Two Additional SCV's (Either Third and Fourth or Fourth and Fifth) Not compatible with MY2011 and later tractors. See sales manual for details.*	1,478.40
	LVB25511	Electric Diverter Kit (Open Station Only) *Includes Two Additional SCV's (Either Third and Fourth or Fourth and Fifth) Not compatible with MY2011 tractors. See sales manual for details.*	1,478.40
	LVB26077	Electric Diverter Kit (Open Station Only) *Includes two additional SCV's.*	1,478.40
	LVB26033	Electrohydraulic Third SCV Kit (Cab Only) *Includes Rear Mounted Couplers, Hydraulic Lines and SCV Lever. Starting with MY2011. Not backward compatible. See Sales Manual for MY2011 serial number break.*	1,112.10
	LVB26032	Electrohydraulic Third SCV Kit (Open Station Only) *Includes Rear Mounted Couplers, Hydraulic Lines and SCV Lever. Starting with MY2011. Not backward compatible. See Sales Manual for MY2011 serial number break.*	1,112.10
	LVB26078	Electronic Diverter Kit (Cab Only) *Includes two additional SCV's.*	1,478.40
	LVB25780	Power Beyond Kit (Cab Only) *Not compatible with MY2011 tractors. See sales manual for details.*	336.60
	LVB26071	Power Beyond Kit (Cab Only) *Starting with MY2011. Not backward compatible. See Sales Manual for MY2011 serial number break.*	412.50

4520 Compact Utility Tractor (50 - 52 PTO)
Continued

CODE	ATTACHMENT IDENTIFIER	DESCRIPTION	SUGGESTED LIST PRICE USD ($)
		ATTACHMENTS FOR FIELD CONVERSION Continued...	
	LVB25512	Power Beyond Kit (Open Station Only) *Includes Rear Mounted Hydraulic Couplers and Hose for Use with Backhoe on 4510-4710 and 4120-4720 Open Station Tractors. Not compatible with MY2011 tractors. See sales manual for details.*	317.90
	LVB26066	Power Beyond Kit (Open Station Only) *Includes Rear Mounted Hydraulic Couplers and Hose for Use with Backhoe on 4510-4710 and 4120-4720 Open Station Tractors. Starting with MY2011. Not backward compatible. See Sales* *Manual for MY2011 serial number break.*	412.50
	LVB24848	Third Selective Control Valve Kit (Cab Only) *Includes Rear Mounted Couplers, Hydraulic Lines and SCV Lever. Not compatible with MY2011 or older tractors. See sales manual for details.*	278.30
	LVB25513	Third Selective Control Valve Kit (Open Station Only) *Includes Rear Mounted Couplers, Hydraulic Lines and SCV Lever. Not compatible with MY2011 or older tractors. See sales manual for details.*	278.30
	LVB25312	Top and Tilt Field Kit *Requires Electric Diverter Kit. For 4120, 4320 and 4520 MY2011 and prior.*	1,125.30
	LVB26161	Top and Tilt Field Kit *Requires Electric Diverter Kit.* *Prior to MY2011 order LVB25312.*	1,236.40
		Kits and Accessories:	
	RE527545	Engine Block Heater	See Parts
		Lighting:	
	LVB25547	Auxiliary Rear Work Light Kit (1 Light) *Includes Wiring Harness. Not Compatible with Forward Lighting Kit (LVB25546). Not for use with Cab Tractors.*	62.70
	LVB24852	Beacon Light Kit (Cab Only)	236.50
	LVB25546	Forward Lighting Kit (2 Lights) *Requires Light Brush Guard Kit, LVB25236.* *Open Station Only.*	95.70
	LVB24853	Rear Work Light Kit (2 Lights) (Cab Only) *Cab is Pre-Wired.*	150.70
	LVB25236	Warning Light Brush Guard Kit (Two Guards) *Open Station Only.*	61.60
		Miscellaneous:	
	LVB25971	7-Pin Trailer Connector (Cab) *Serial # (H650360 -)*	107.80
	LVB25960	7-Pin Trailer Connector (Open Station)	271.70
	LVB25867	Automotive Style Cruise Load Match, Speed Match and Uppgraded Motion Match Switch *Serial # (655001 -)*	112.20
	LVB25866	Automotive Style Cruise, Load Match, Speed Match, and Upgraded Motion Match Switch *Serial # (-655000).*	112.20

4520 Compact Utility Tractor (50 - 52 PTO)
Continued

CODE	ATTACHMENT IDENTIFIER	DESCRIPTION	SUGGESTED LIST PRICE USD ($)
		ATTACHMENTS FOR FIELD CONVERSION Continued...	
	LVB25607	Back-up Alarm Kit *Requires eHydro Transmission Option.*	126.50
	LVB24851	Horn Kit (Cab Only)	47.30
	TY15201	Tire Chains *For Use with 10-16.5 In. 6 PR (R4) Front Tires*	See Parts
	TY15988	Tire Chains *For Use with 44X18.00-20 In. 4PR (R3) Rear Tires*	See Parts
	TY16202	Tire Chains *For Use with 17.5L-24 In. 8 (R4) Rear Tires*	See Parts
	TY4462	Tire Chains *For Use with 13.6-28 In. 4PR (R1) Rear Tires.*	See Parts
	LVB24865	Tool Box Kit	165.00
		Operator Environment:	
	LVB24983	Air Seat Suspension Kit (Cab Only)	723.80
	LVB25688	Air Seat Suspension Kit (Open Station Only) *Includes Air Ride Suspension Only. Used with Seat that Ships With Tractor.*	657.80
	LVB26065	Cab Speaker and Radio Mount Kit *Cab Only. Compatible only with MY2010 or previous models. See sales manual for details.*	90.20
	LVB25334	Canopy - Standard	572.00
	LVB25332	Canopy Mounting Bracket and Hardware Kit	103.40
	LVB24876	Cigarette Lighter/Ashtray Kit (Cab Only) *For 3320, 3520, 3720, 4320, 4520 and 4720 Tractors.*	47.30
	LVB24844	External Mirror Kit (Cab Only)	184.80
	LVB24856	Rear Wiper Kit (Cab Only)	280.50
	LVB25501	Seat Armrest Kit *Open Station Only, Standard on Cab Tractors.*	140.80
	SWJHD1620	Stereo with AM/FM, Weatherband, SIRIUS Satellite and iPod Ready *Stereo included with option Code 9520 when configuring Tractor.*	See Parts
	TY25324	Weather Protection Umbrella	See Parts
		Order Zone:	
	720969235	3-Point Hitch Tractor Receiver Hitch	In Catalog
	LP95233	Large Seat Cover	In Catalog
	LP95333	ROPS Organizer	In Catalog

4520 Compact Utility Tractor (50 - 52 PTO)

Continued

CODE	ATTACHMENT IDENTIFIER	DESCRIPTION	SUGGESTED LIST PRICE USD ($)
		ATTACHMENTS FOR FIELD CONVERSION Continued...	
		PTO:	
	LVB24847	Mid PTO Controls (Cab Only)	171.60
	LVB25959	Mid PTO Kit *4X20 Tractors with SN ending in 916000 (OOS) and 946000 (Cab) are NOT compatible with mid-mount mowers.* *Cab Tractors Require LVB24847 Mid PTO Controls.*	740.30
		Spanish North American Kit:	
	LVB25996	Spanish North American Operator's Manual and Decal Kit *Cab Tractors.* *For 4120, 4320 and 4520 Tractors*	78.10
	LVB26186	Spanish North American Operator's Manual and Decal Kit *Cab Tractors.*	80.30
	LVB25988	Spanish North American Operators Manual and Decal Kit *Open Station Tractors.* *For 4120, 4320 and 4520 Tractors*	62.70
	LVB26185	Spanish North American Operators Manual and Decal Kit *Open Station Tractors.*	64.90
		Transmission:	
	LVB25865	PRT Oil Cooler Kit	280.50
	AR94493	Transmission Oil Heater *Requires AR95434 Cord Set, R34557 Clamp and (2) R44302, Self Locking Straps.*	See Parts
		Vandal Protection:	
	AL113087	Vandal Protection, Lockable Fuel Tank Cap *Cab Only.*	See Parts
		Weights:	
	BM19940	Attaching Hardware for Additional Rear Wheel Weight, 110 lb.	13.20
	BM19937	Attaching Hardware for Additional Rear Wheel Weight, 55 Lb.	9.90
	BM19939	Attaching Hardware for Starter Rear Wheel Weight, 110 lb.	36.30
	LVB25004	Attaching Hardware for Starter Rear Wheel Weight, 55 Lb.	52.80
	LVB25705	Front Quik-Tatch Weight Kit (4020 Series) *Includes Rod and Spring Pins for Front Quik-Tatch Weights.*	44.00
	LVBM19596	Front Weight Bracket Extension Kit (4020 Series) *Includes Extension Bracket and All Hardware (Including Rod and Spring Pins) to Hold up to Twelve Front Quik-Tatch Weights.*	255.20
	R66949	Quik-Tatch Weight, 42 Lb. *Requires (1) LVB25705, Front Weight Pin Kit.*	62.06
	BM19780	Quik-Tatch Weight, 70 lb. *Requires (1) LVB25705, Front Quik-Tatch Weight Kit.*	108.90
	BM17968	Rear Wheel Weight, 55 Lb. *Starter and Additional Weight for 19.5 and 20 In. Wheel.*	140.80

4520 Compact Utility Tractor (50 - 52 PTO)
Continued

CODE	ATTACHMENT IDENTIFIER	DESCRIPTION	SUGGESTED LIST PRICE USD ($)
		ATTACHMENTS FOR FIELD CONVERSION Continued...	
	T19293	Weight, Rear Wheel 110 Lb. *Starter and Additional Weight for 24 and 28 In. Wheel.*	277.64
		Wheels and Tires Front:	
	BM19108	Two 2 Position Steel Wheels With 10-16.5 In. 6 PR (R4) Front Tires	949.30
	LVB25007	Two 2 Position Steel Wheels With 27-12LL-15 In. 6 PR (R3) Turf Special Front Tires	1,080.20
	BM19083	Two 2 Position Steel Wheels With 8-16 In. 6 PR (R1) Front Tires	678.70
	LVB25108	Two 2 Position Steel Wheels with 27X10.50-15 In. 4PR (R3) Front Tires	606.10
		Wheels and Tires Rear:	
	LVB25981	Two 2 Position Steel Wheels With 17.5L-24 In. 6PR (R4) Rear Tires	2,261.60
	BM19208	Two 2 Position Steel Wheels With 22.5LL-16.1 In. 6 PR (R3) Turf Special Rear Tires	3,687.20
	LVB25000	Two 2 Position Steel Wheels With 44X18.00-20 In. 4 PR (R3) Rear Tires	2,248.40
	BLV10328	Two 2 Position Steel Wheels With 16.9L-24 In. 6PR (R4) Rear Tires	3,064.60
	BM19113	Two 8 Position Steel Wheels With 13.6-28 In. 4PR (R1) Rear Tires	1,916.20

EXTENDED WARRANTY - RESIDENTIAL OWNERS/USE

Visit http://www.JohnDeere.com/ServicePlans for more information on John Deere Service Contracts. May not be Available in Parts of the U.S., Not Available in Canada. Price may vary due to driving distance and/or time from machine to dealership location.

4720 Compact Utility Tractor (56 PTO hp)

Equipment for Base Machine

ENGINE:
John Deere PowerTech
4 Cylinder Liquid Cooled
Turbocharged Diesel Engine
Interim Tier IV EPA Emmissions
Certified
Engine HP 66.0 (48.5 kW)**
PTO HP 56.0 (41.8 kW)
Rated Speed 2400 RPM
**Manufacturer's Estimate of
Power (ISO) per 97/68 EC

TRANSMISSION:
eHydro Transmission (4720)

HYDRAULICS:
Dual Mid Selective Control
Valve with Joystick Control
Lever, Float, Regenerative
Function, and SCV and
Regenerative Lockout

INSTRUMENTATION:
Performance Tracking System
Diagnostic Control Panel
Hour Meter
Speedometer (eHydro only)
MotionMatch (eHydro only)
LoadMatch (eHydro only)

ELECTRICAL:
12-Volt Electrical System
70 Amp Alternator
Key Ignition Starter with
Accessory and Pre-Heat
Position
Wet Battery with 770
Cold Cranking Amps

OPERATOR PROTECTIVE STRUCTURE:
Deluxe Adjustable Vinyl Seat
with Retractable Seat Belt
Folding ROPS (Roll-Over
Protective Structure)
Meets SAE J2194 and OSHA
1928 ROPS Certification
Standards for North America
and Europe
Isolated Foot Rest
Operator Presence with
Safety Interlock

CAB:
12 Volt Auxilary Power Outlet
Air Conditioning and Heater
Armrests
Cell Phone Holder
Deluxe Fabric Covered Seat with
Retractable Seat Belt
Dual Forward Work Lights
Exclusive Raised Header Bar
Two Speed Front Windshield
Wiper/Washer
Rear Wiper
Fully Isolated Deluxe Cab
High Impact Polymer Fenders with
Integrated Tail Lights
Radio Preparation (w/antenna,
speakers,
wiring, media player storage
slot)
Molded Rubber Floormat
Operator Manual Holder
Rearview Mirror (inside)
Monitor Mounting Bosses (2 sets)
Right Hand and Left Hand Console
Storage
Right Hand Control Center
Sealed Quiet Cabin
Swing-Out Rear
Window w/removable
rear plug for monitor or
controller
wiring harnesses
Swing-Out Rear Window
Tilt Steering
Two Front/Two Rear Roof Mounted
Warning Lights
Rear Work Light

BASE MACHINE (4WD):
Two 8 Position Steel Wheels
with 13.6-28 4PR (R1)
Rear Tires
Two 2 Position Steel Wheels
with 8-16 6PR (R1)
Front Tires

CODE	ATTACHMENT IDENTIFIER	DESCRIPTION	SUGGESTED LIST PRICE USD ($)

Select One Code From Each Required Category

BASE MACHINE

F.O.B. Grovetown, Georgia

6865LV	4720 Compact Utility Tractor (56 PTO hp) *Information on this Sheet is Informational Only. All 4720 Tractors are Available as Package Tractors.*	35,633.00

OPERATOR STATION

1505	Open Station with Standard Seat	In Base Price
1506	Open Station with Air Ride Seat *Requires Option Codes 7030 (Dual Mid & Single Electrohydraulic Rear SCV)*	344.00
1514	Cab with Air Ride Seat *Includes Rear Wiper and Rear Work Light. Requires Transmission Option 2025 (eHydro) or 2045 (eHydro with 540/540E PTO and SCV Option Code 7010 (Mid DSCV).*	8,600.00

4720 Compact Utility Tractor (56 PTO hp)

Continued

CODE	ATTACHMENT IDENTIFIER	DESCRIPTION	SUGGESTED LIST PRICE USD ($)
		TRANSMISSION	
2025		eHydro	In Base Price
2045		eHydro with 540/540E PTO *Option Codes 2045 (eHydro with 540/540E PTO), 7010 (Dual Mid SCV) and 7030 (Dual Mid and Single Electrohydraulic Rear SCV) Not Available on Open Station Tractors.*	536.00
		WHEELS WITH TIRES (TWO)	
4540		27x10.5-15 4PR Front R3 Turf 2 Pos. Bias 44X18.0-20 4PR Rear R3 Turf 2 Pos. Bias	204.00
4550		8-16 6PR Front R1 2 Pos. Bias 13.6-28 4PR Rear R1 Bar 8 Pos. Bias	In Base Price
4580		10-16.5 6PR Front R4 Ind. 2 Pos. Bias 16.9L-24 6PR Rear R4 Ind. 2 Pos. Bias	477.00
4565		27-12LL-15 6PR Front R3 Turf Special 2 Pos. Bias 22.5LL-16.1 6PR Rear R3 Turf Special 2 Pos. Bias	1,679.00
		SELECTIVE CONTROL VALVES	
7010		Dual Mid SCV	In Base Price
7030		Dual Mid & Single Electrohydraulic Rear SCV *Available only as dealer-installed option on 4320-4720 Cab Tractors.*	934.00
		ATTACHMENTS - ORDER AS DESIRED	
		Operator Environment:	
9520		Factory Installed Stereo (Jensen Receiver, Weather Band, Auxiliary Port, and iPod compatibility)	480.00
		Spanish North American Kit:	
9800		Spanish North American Operator's Manual and Decal Kit	No Charge
		ATTACHMENTS FOR FIELD CONVERSION	
		Engine:	
	LVA13458	Spark Arrester Screen	See Parts
	LVB25561	Vertical Exhaust Kit *Serial #(- 670000).*	232.10
	LVB25765	Vertical Exhaust Kit *Serial #(670001 -).*	386.10
	RE51650	Water Separator Clear Bowl	See Parts
		Fenders:	
	LVB25685	Front Fender Kit	521.40
	LVB24860	Rear Fender Extension Kit (Cab Only)	259.60
	LVB25683	Rear Fender Extension Kit (Open Station Only)	272.80

4720 Compact Utility Tractor (56 PTO hp)
Continued

CODE	ATTACHMENT IDENTIFIER	DESCRIPTION	SUGGESTED LIST PRICE USD ($)
		ATTACHMENTS FOR FIELD CONVERSION Continued...	
		Hitch:	
	LVB25309	Telescoping Draft Links	378.40
	LVB25255	iMatch Quick Hitch Category 1 *Bushings NOT included. Orderable through parts (LVU15507).*	315.70
	LVB25976	iMatch Quick Hitch Category 1 with adjustable top hook	350.90
		Hood Guards:	
	BW15222	Deluxe Hood Guard Attachment	316.80
	BW15221	Hood Guard (4120-4720)	251.90
		Hydraulics:	
	LVB26072	4th & 5th Electrohydraulic SCV Kit (Cab Only) *Includes Rear Mounted Couplers, Hydraulic Lines and SCV Lever. Starting with MY2011. Not backward compatible. See Sales Manual for MY2011 serial number break. Also see SCV Options Table under Notes for the appropriate parts needed for installation.*	1,365.10
	LVB26037	4th & 5th Selective Control Valve Kit (Open Station Only) *Includes Rear Mounted Couplers, Hydraulic Lines and SCV Lever. Starting with MY2011. Not backward compatible. See Sales Manual for MY2011 serial number break.*	852.50
	LVB24855	Electric Diverter Kit (Cab Only) *Includes Two Additional SCV's (Either Third and Fourth or Fourth and Fifth) Not compatible with MY2011 and later tractors. See sales manual for details.*	1,478.40
	LVB25511	Electric Diverter Kit (Open Station Only) *Includes Two Additional SCV's (Either Third and Fourth or Fourth and Fifth) Not compatible with MY2011 tractors. See sales manual for details.*	1,478.40
	LVB26077	Electric Diverter Kit (Open Station Only) *Includes two additional SCV's.*	1,478.40
	LVB26033	Electrohydraulic Third SCV Kit (Cab Only) *Includes Rear Mounted Couplers, Hydraulic Lines and SCV Lever. Starting with MY2011. Not backward compatible. See Sales Manual for MY2011 serial number break.*	1,112.10
	LVB26032	Electrohydraulic Third SCV Kit (Open Station Only) *Includes Rear Mounted Couplers, Hydraulic Lines and SCV Lever. Starting with MY2011. Not backward compatible. See Sales Manual for MY2011 serial number break.*	1,112.10
	LVB26078	Electronic Diverter Kit (Cab Only) *Includes two additional SCV's.*	1,478.40
	LVB25780	Power Beyond Kit (Cab Only) *Not compatible with MY2011 tractors. See sales manual for details.*	336.60
	LVB26071	Power Beyond Kit (Cab Only) *Starting with MY2011. Not backward compatible. See Sales Manual for MY2011 serial number break.*	412.50

4720 Compact Utility Tractor (56 PTO hp)
Continued

CODE	ATTACHMENT IDENTIFIER	DESCRIPTION	SUGGESTED LIST PRICE USD ($)
		ATTACHMENTS FOR FIELD CONVERSION Continued...	
	LVB25512	Power Beyond Kit (Open Station Only) *Includes Rear Mounted Hydraulic Couplers and Hose for Use with Backhoe on 4510-4710 and 4120-4720 Open Station Tractors. Not compatible with MY2011 tractors. See sales manual for details.*	317.90
	LVB26066	Power Beyond Kit (Open Station Only) *Includes Rear Mounted Hydraulic Couplers and Hose for Use with Backhoe on 4510-4710 and 4120-4720 Open Station Tractors. Starting with MY2011. Not backward compatible. See Sales* *Manual for MY2011 serial number break.*	412.50
	LVB24848	Third Selective Control Valve Kit (Cab Only) *Includes Rear Mounted Couplers, Hydraulic Lines and SCV Lever. Not compatible with MY2011 or older tractors. See sales manual for details.*	278.30
	LVB25513	Third Selective Control Valve Kit (Open Station Only) *Includes Rear Mounted Couplers, Hydraulic Lines and SCV Lever. Not compatible with MY2011 or older tractors. See sales manual for details.*	278.30
	LVB25312	Top and Tilt Field Kit *Requires Electric Diverter Kit. For 4120, 4320 and 4520 MY2011 and prior.*	1,125.30
	LVB26161	Top and Tilt Field Kit *Requires Electric Diverter Kit.* *Prior to MY2011 order LVB25312.*	1,236.40
		Kits and Accessories:	
	RE527545	Engine Block Heater	See Parts
		Lighting:	
	LVB25547	Auxiliary Rear Work Light Kit (1 Light) *Includes Wiring Harness. Not Compatible with Forward Lighting Kit (LVB25546). Not for use with Cab Tractors.*	62.70
	LVB24852	Beacon Light Kit (Cab Only)	236.50
	LVB25546	Forward Lighting Kit (2 Lights) *Requires Light Brush Guard Kit, LVB25236.* *Open Station Only.*	95.70
	LVB24853	Rear Work Light Kit (2 Lights) (Cab Only) *Cab is Pre-Wired.*	150.70
	LVB25236	Warning Light Brush Guard Kit (Two Guards) *Open Station Only.*	61.60
		Miscellaneous:	
	LVB25971	7-Pin Trailer Connector (Cab) *Serial # (H670871 -)*	107.80
	LVB25960	7-Pin Trailer Connector (Open Station)	271.70
	LVB25867	Automotive Style Cruise Load Match, Speed Match and Uppgraded Motion Match Switch *Serial # (670001 -)*	112.20
	LVB25866	Automotive Style Cruise, Load Match, Speed Match, and Upgraded Motion Match Switch *Serial # (-670000).*	112.20

4720 Compact Utility Tractor (56 PTO hp)
Continued

CODE	ATTACHMENT IDENTIFIER	DESCRIPTION	SUGGESTED LIST PRICE USD ($)
		ATTACHMENTS FOR FIELD CONVERSION Continued...	
	LVB25607	Back-up Alarm Kit *Requires eHydro Transmission Option.*	126.50
	LVB24851	Horn Kit (Cab Only)	47.30
	TY15201	Tire Chains *For Use with 10-16.5 In. 6 PR (R4) Front Tires*	See Parts
	TY15988	Tire Chains *For Use with 44X18.00-20 In. 4PR (R3) Rear Tires*	See Parts
	TY16202	Tire Chains *For Use with 17.5L-24 In. 8 (R4) Rear Tires*	See Parts
	TY4462	Tire Chains *For Use with 13.6-28 In. 4PR (R1) Rear Tires.*	See Parts
	LVB24865	Tool Box Kit	165.00
		Operator Environment:	
	LVB24983	Air Seat Suspension Kit (Cab Only)	723.80
	LVB25688	Air Seat Suspension Kit (Open Station Only) *Includes Air Ride Suspension Only. Used with Seat that Ships With Tractor.*	657.80
	LVB26065	Cab Speaker and Radio Mount Kit *Cab Only. Compatible only with MY2010 or previous models. See sales manual for details.*	90.20
	LVB25334	Canopy - Standard	572.00
	LVB25332	Canopy Mounting Bracket and Hardware Kit	103.40
	LVB24876	Cigarette Lighter/Ashtray Kit (Cab Only) *For 3320, 3520, 3720, 4320, 4520 and 4720 Tractors.*	47.30
	LVB24844	External Mirror Kit (Cab Only)	184.80
	RE289848	Radio, Deere/Delco AM/FM Stereo with Clock, Front Audio Input Jack for MP3 Players, and Weatherband *Requires LVB26065 Cab Speaker and Radio Mount Kit.* *Cab only. Compatible only with MY2010 or previous models.*	434.00
	RE289852	Radio, Deere/Delco AM/FM Stereo with Single Compact Disc Player, Clock, Front Audio Input Jack for MP3 Players, and Weatherband *Requires LVB26065 Cab Speaker and Radio Mount Kit.* *Cab only. Compatible only with MY2010 or previous models.*	849.00
	LVB24856	Rear Wiper Kit (Cab Only)	280.50
	LVB25501	Seat Armrest Kit *Open Station Only, Standard on Cab Tractors.*	140.80
	SWJHD1620	Stereo with AM/FM, Weatherband, SIRIUS Satellite and iPod Ready *Stereo included with option Code 9520 when configuring Tractor.*	See Parts
	TY25324	Weather Protection Umbrella	See Parts

4720 Compact Utility Tractor (56 PTO hp)
Continued

CODE	ATTACHMENT IDENTIFIER	DESCRIPTION	SUGGESTED LIST PRICE USD ($)
		ATTACHMENTS FOR FIELD CONVERSION Continued...	
		Order Zone:	
	720969235	3-Point Hitch Tractor Receiver Hitch	In Catalog
	LP95233	Large Seat Cover	In Catalog
	LP95333	ROPS Organizer	In Catalog
		PTO:	
	LVB24847	Mid PTO Controls (Cab Only)	171.60
	LVB25959	Mid PTO Kit *4X20 Tractors with SN ending in 916000 (OOS) and 946000 (Cab) are NOT compatible with mid-mount mowers.* *Cab Tractors Require LVB24847 Mid PTO Controls.*	740.30
		Spanish North American Kit:	
	LVB26186	Spanish North American Operator's Manual and Decal Kit *Cab Tractors.*	80.30
	LVB26185	Spanish North American Operators Manual and Decal Kit *Open Station Tractors.*	64.90
		Transmission:	
	AR94493	Transmission Oil Heater *Requires AR95434 Cord Set, R34557 Clamp and (2) R44302, Self Locking Straps.*	See Parts
		Vandal Protection:	
	AL113087	Vandal Protection, Lockable Fuel Tank Cap *Cab Only.*	See Parts
		Weights:	
	BM19940	Attaching Hardware for Additional Rear Wheel Weight, 110 lb.	13.20
	BM19937	Attaching Hardware for Additional Rear Wheel Weight, 55 Lb.	9.90
	BM19939	Attaching Hardware for Starter Rear Wheel Weight, 110 lb.	36.30
	LVB25004	Attaching Hardware for Starter Rear Wheel Weight, 55 Lb.	52.80
	LVB25705	Front Quik-Tatch Weight Kit (4020 Series) *Includes Rod and Spring Pins for Front Quik-Tatch Weights.*	44.00
	LVBM19596	Front Weight Bracket Extension Kit (4020 Series) *Includes Extension Bracket and All Hardware (Including Rod and Spring Pins) to Hold up to Twelve Front Quik-Tatch Weights.*	255.20
	R66949	Quik-Tatch Weight, 42 Lb. *Requires (1) LVB25705, Front Weight Pin Kit.*	62.06
	BM19780	Quik-Tatch Weight, 70 lb. *Requires (1) LVB25705, Front Quik-Tatch Weight Kit.*	108.90
	BM17968	Rear Wheel Weight, 55 Lb. *Starter and Additional Weight for 19.5 and 20 In. Wheel.*	140.80
	T19293	Weight, Rear Wheel 110 Lb. *Starter and Additional Weight for 24 and 28 In. Wheel.*	277.64
		Wheels and Tires Front:	

4720 Compact Utility Tractor (56 PTO hp)
Continued

CODE	ATTACHMENT IDENTIFIER	DESCRIPTION	SUGGESTED LIST PRICE USD ($)
		ATTACHMENTS FOR FIELD CONVERSION Continued...	
	BM19108	Two 2 Position Steel Wheels With 10-16.5 In. 6 PR (R4) Front Tires	949.30
	LVB25007	Two 2 Position Steel Wheels With 27-12LL-15 In. 6 PR (R3) Turf Special Front Tires	1,080.20
	BM19083	Two 2 Position Steel Wheels With 8-16 In. 6 PR (R1) Front Tires	678.70
	LVB25108	Two 2 Position Steel Wheels with 27X10.50-15 In. 4PR (R3) Front Tires	606.10
		Wheels and Tires Rear:	
	LVB25981	Two 2 Position Steel Wheels With 17.5L-24 In. 6PR (R4) Rear Tires	2,261.60
	BM19208	Two 2 Position Steel Wheels With 22.5LL-16.1 In. 6 PR (R3) Turf Special Rear Tires	3,687.20
	LVB25000	Two 2 Position Steel Wheels With 44X18.00-20 In. 4 PR (R3) Rear Tires	2,248.40
	BLV10328	Two 2 Position Steel Wheels With 16.9L-24 In. 6PR (R4) Rear Tires	3,064.60
	BM19113	Two 8 Position Steel Wheels With 13.6-28 In. 4PR (R1) Rear Tires	1,916.20

EXTENDED WARRANTY - RESIDENTIAL OWNERS/USE

Visit http://www.JohnDeere.com/ServicePlans for more information on John Deere Service Contracts. May not be Available in Parts of the U.S., Not Available in Canada. Price may vary due to driving distance and/or time from machine to dealership location.

7 Backhoe (For 3005, 790, 770 Tractors)

Equipment for Base Machine

7.5 ft. (2.3 m) Digging Depth
Quik-Tatch Mounting
180 Degree Swing
Control Console
Two Lever Control
Six Spool Control Valve
9 In. Bucket
Operator's Seat with
Transport Lock
Hydraulic Stabilizers with
Combination Grouser and
Smooth Pads
Mountings, Hydraulics,
Subframe and Rear Hanger
Brackets for 790 Tractor

CODE	ATTACHMENT IDENTIFIER	DESCRIPTION	SUGGESTED LIST PRICE USD ($)
		Select One Code From Each Required Category	
		BASE MACHINE	
		F.O.B. Davenport, Iowa	
0512TY		7 Backhoe (For 3005, 790, 770 Tractors) *Tractors Must be Equipped with a Front Loader. 3005, 790 and 770 Tractors Require BM18005 Power Beyond Kit and AM107212 ROPS Extension Kit. On 3005, 790 Tractors with 11.2-24, 4PR (R1) Tires, the Stabilizer will not Contact Ground for Adequate Stability.*	7,895.00
		MOUNTINGS, HYDRAULICS, SUBFRAME, AND REAR HANGER	
1002		Less Mountings, Hydraulics, Subframe and Rear Hanger Brackets	-1,303.00
1005		Mountings, Hydraulics, Subframe and Rear Hanger Brackets for 3005, 770 and 790 Tractors with 419, 300 or 70 Loader	In Base Price
		Buckets:	
4000		9 In. Bucket	In Base Price
4001		13 In. Bucket	47.00
4002		16 In. Bucket	78.00
4003		20 In. Bucket	153.00
4004		Less Bucket	-351.00
		ATTACHMENTS FOR FIELD CONVERSION	
		Buckets:	
	BM19558	13 In. Bucket (1.04 Cu. Ft.)	469.70
	BM19559	16 In. Bucket (1.33 Cu. Ft.)	506.00
	BM19560	20 In. Bucket (1.74 Cu. Ft.)	595.10
	BM19557	9 In. Bucket (0.64 Cu. Ft.)	413.60

7 Backhoe (For 3005, 790, 770 Tractors)
Continued

CODE	ATTACHMENT IDENTIFIER	DESCRIPTION	SUGGESTED LIST PRICE USD ($)
		ATTACHMENTS FOR FIELD CONVERSION Continued...	
		Hydraulics:	
	BM18005	Power Beyond Kit (3005, 790, 770)	317.90
	BM16763	Power Beyond Kit (55 Series) *See Sales Manual for Serial Number Breaks.*	278.30
		Miscellaneous:	
	BM22373	Mountings, Hydraulics, Subframe and Rear Hanger Brackets for 3005, 770 and 790 Tractors with 419, 300 or 70 Loader	1,536.70
		Operator Environment:	
	AM107212	10 In. Extension for Roll-Gard Cross Tube *Required for Use with 7 Backhoe on 3005, 790 and 770 Tractors.*	See Parts
	AM119856	Tall Roll-Gard *Required for Use with 7 Backhoe on 755, 855, 955 Tractors.*	See Parts

8B Backhoe (For 4005, 990, 870, 970, 1070 Tractors)

Equipment for Base Machine

8.5 ft. (2.6 m) Digging Depth
Quik-Tatch Mounting
180 Degree Swing
Control Console
Two Lever Control
Six Spool Control Valve
12 In. Bucket
Operators Seat with Transport Lock
Hydraulic Stabilizers with Combination Grouser and Smooth Pads
Mountings, Hydraulics, Subframe and Rear Hanger Brackets for 4005, 870, 970,990 and 1070 Tractors

CODE	ATTACHMENT IDENTIFIER	DESCRIPTION	SUGGESTED LIST PRICE USD ($)
		Select One Code From Each Required Category	
		BASE MACHINE	
		F.O.B. Davenport, Iowa	
1840M		8B Backhoe (For 4005, 990, 870, 970, 1070 Tractors) *Tractors Must be Equipped with a Front Loader and Require BM18010 Power Beyond Kit. For 990 Tractors Above Serial No. LV0990G590001, Refer to Sales Manual for Additional Parts.*	8,995.00
		MOUNTINGS, HYDRAULICS, SUBFRAME, AND REAR HANGER	
1000		Mountings, Hydraulics, Subframe and Rear Hanger Brackets for 4005, 870, 970, 990 and 1070 Tractors	In Base Price
1004		Less Mountings, Hydraulics and Subframe	-1,400.00
		Buckets:	
3000		12 In. Bucket	In Base Price
3001		18 In. Bucket	75.00
3002		24 In. Bucket	158.00
3003		36 In. Bucket	300.00
3004		Less Bucket	-596.00
		ATTACHMENTS - ORDER AS DESIRED	
		ATTACHMENTS FOR FIELD CONVERSION	
		Buckets:	
	BM19568	12 In. Standard Bucket (1.53 Cu. Ft.)	702.90
	BM19569	18 In. Standard Bucket (2.47 Cu. Ft.)	792.00
	BM19570	24 In. Standard Bucket (3.48 Cu. Ft.)	888.80

8B Backhoe (For 4005, 990, 870, 970, 1070 Tractors)

Continued

CODE	ATTACHMENT IDENTIFIER	DESCRIPTION	SUGGESTED LIST PRICE USD ($)
		ATTACHMENTS FOR FIELD CONVERSION Continued...	
	BM19571	36 In. Standard Bucket (5.50 Cu. Ft.)	1,056.00
		Hydraulics:	
	BM18010	Power Beyond Kit	334.40
		Miscellaneous:	
	AH75164	Elbow Assy., 90 Degree Adjustable *Order AH75164 or AV43772 When 8, 8A or 8B Backhoe is Mounted on 850 (SN 009000 and Below) or 950 (SN 012000 and Below) Tractors.*	See Parts
	BM17019	Mountings, Hydraulics, Subframe and Rear Hanger Brackets (4005, 870, 970, 990, 1070)	1,650.00

260 Backhoe
(For 2305, 2210, 1023E, 1025R, 1026R Tractors)
Equipment for Base Machine

6 ft. 2 In. (1.89 m) Digging Depth
One Double Acting Swing Cylinder
150 Degree Swing
Narrow Control Console
Two Lever Control
Six Spool Control Valve
Hydraulics
8 In. Bucket
Swivel Seat Bracket
Transport Locking Pins
Hydraulic Stabilizers
Subframe Mounting

CODE	ATTACHMENT IDENTIFIER	DESCRIPTION	SUGGESTED LIST PRICE USD ($)
		Select One Code From Each Required Category	
		BASE MACHINE	
		F.O.B. Davenport, Iowa	
1161LV		260 Backhoe (For 2305, 2210, 1023E, 1025R, 1026R Tractors) *Tractors Must be Equipped with a Front Loader and a Power Beyond Hydraulic kit LVB25956 (except 2305 and 2210). If Ordering for a 2210 Tractor, LVB24980 Seat Kit is Required. Tire chains are not compatible with backhoe.* *Only 17 digit Serial No. 260 backhoes (with updated mainframe) are compatible with 1023E, 1025R, and 1026R.*	5,690.00
		SUBFRAME MOUNTING/POWER BEYOND HYDRAULICS	
1001		Subframe Mounting/Power Beyond Hydraulics (For 2305 Tractors) *AM105466 and AM105467 Couplers are required or need to be included in code.*	-71.00
1002		Subframe Mounting/Power Beyond Hydraulics (For 2210 Tractors) *AM105466 and AM105467 Couplers are required or need to be included in code.*	-71.00
1005		Subframe Mounting (For 1023E Tractors) *Power Beyond kit LVB25956 is required on tractor.*	In Base Price
1006		Subframe Mounting (For 1025R and 1026R Tractors) *Power Beyond kit LVB25956 is required on tractor.*	Same Price
1010		Less Subframe Mounting/Power Beyond Hydraulics	-1,115.00
		Buckets:	
2000		8 In. Bucket (0.63 Cu. Ft.)	In Base Price
2001		12 In. Bucket (0.90 Cu. Ft.)	56.00
2002		16 In. Bucket (1.31 Cu. Ft.)	96.00
2010		Less Bucket	-310.00

ATTACHMENTS - ORDER AS DESIRED

260 Backhoe
(For 2305, 2210, 1023E, 1025R, 1026R Tractors)
Continued

CODE	ATTACHMENT IDENTIFIER	DESCRIPTION	SUGGESTED LIST PRICE USD ($)
		ATTACHMENTS - ORDER AS DESIRED Continued...	
		Spanish North American Kit:	
9430		Spanish North American Operator's Manual and Decal Kit	No Charge
		ATTACHMENTS FOR FIELD CONVERSION	
		Buckets:	
	LVB24976	12 In. Backhoe Bucket (0.90 Cu. Ft.)	430.10
	LVB24977	16 In. Backhoe Bucket (1.31 Cu. Ft.)	478.50
	LVB24975	8 In. Backhoe Bucket (0.63 Cu. Ft.)	365.20
		Hydraulics:	
	LVB25956	Power Beyond Kit	169.40
		Miscellaneous:	
	BM19556	Rubber Street Pad Kit	138.60
	LVB24980	Seat Kit (2210) *2210 Tractor Seats need to be Upgraded to the 2305 Seat to Work with Swivel Mechanism. Kit Includes Bracket for SMV Sign.*	162.80
	LVB24982	Stabilizer Cylinder Protection Kit	123.20
		Mountings and Hardware for Tractors:	
	BLV10161	Subframe Mounting (For 1023E Tractors) *Power Beyond kit LVB25956 is required on tractor.*	1,314.50
	BLV10162	Subframe Mounting (For 1025R, 1026R Tractors) *Power Beyond kit LVB25956 is required on tractor.*	1,314.50
	LVB24973	Subframe Mounting/Power Beyond Hydraulics Kit (For 2210 Tractors with 260 Backhoe)	1,229.80
	LVB25969	Subframe Mounting/Power Beyond Hydraulics Kit (For 2305 Tractors with 260 Backhoe)	1,229.80
		Operator Manual and Decal Kit:	
	BLV10060	Spanish North American Operator's Manual and Decal Kit	17.60

46 Backhoe (For 2032R, 2520, 2720, 4100, 4110, 4115 Tractors)

Equipment for Base Machine

6.5 ft. (2.0 m) Digging Depth
Two Double Acting Swing Cylinders
180 Degree Swing
Narrow Control Console
Two Lever Control
Six Spool Control Valve Hydraulics
9 In. Bucket
Operator's Seat with Transport Lock
Hydraulic Stabilizers with Flip-Over Pads
Subframe Mounting

CODE	ATTACHMENT IDENTIFIER	DESCRIPTION	SUGGESTED LIST PRICE USD ($)
		Select One Code From Each Required Category	
		BASE MACHINE	
		F.O.B. Davenport, Iowa	
1150LV		46 Backhoe (For 2032R, 2520, 2720, 4100, 4110, 4115 Tractors) *The 46 Backhoe is not Compatible with a Mid-Mount Mower Deck, See Sales Manual. Tractors Must be Equipped with a 200X/200CX Front Loader and Power Beyond Kit. With Full Axle Oscillation and Sharp Turning Angle, Tires have some Interference with 200X/200CX Loader Tubes when 46 Backhoe is Installed on 4115 Tractors. This Condition is Worse with R3 Tires than R4's. 4100, 4110, 4115 Tractors Require Folding ROPS and Tall ROPS Upper Hoop Kit (LVB25573).*	7,240.00
		SUBFRAME MOUNTING	
1000		Subframe Mounting (For 4100, 4110 Tractors)	Same Price
1002		Subframe Mounting (For 4115 Tractors)	Same Price
1004		Subframe Mounting (For 2032R, 2520, 2720)	Same Price
1010		Less Subframe Mounting	-1,020.00
		Buckets:	
2000		9 In. Bucket (0.64 Cu. Ft.)	In Base Price
2001		13 In. Bucket (1.04 Cu. Ft.)	47.00
2002		16 In. Bucket (1.33 Cu. Ft.)	78.00
2003		20 In. Bucket (1.74 Cu. Ft.)	153.00
2004		24 In. Bucket (2.14 Cu. Ft.)	210.00
2010		Less Bucket	-351.00
		ATTACHMENTS FOR FIELD CONVERSION	
		Buckets:	
	BM19558	13 In. Bucket (1.04 Cu. Ft.)	469.70
	BM19559	16 In. Bucket (1.33 Cu. Ft.)	506.00

46 Backhoe (For 2032R, 2520, 2720, 4100, 4110, 4115 Tractors)

Continued

CODE	ATTACHMENT IDENTIFIER	DESCRIPTION	SUGGESTED LIST PRICE USD ($)
		ATTACHMENTS FOR FIELD CONVERSION Continued...	
	BM19560	20 In. Bucket (1.74 Cu. Ft.)	595.10
	BM19561	24 In. Bucket (2.14 Cu. Ft.)	662.20
	BM19557	9 In. Bucket (0.64 Cu. Ft.)	413.60
		Hydraulics:	
	LVB25603	Power Beyond Kit *Not Compatible with Third SCV kit BLV1038/LVB26166* *Includes Rear Mounted Hydraulic Couplers and Hose for Use with Backhoe on 2320, 2520, 2720 Tractors.* *Equipped with Dual SCV.*	357.50
	BLV10381	Power Beyond Kit *Not Compatible with Third SCV kit BLV1038/LVB26166* *Includes Rear Mounted Hydraulic Couplers and Hose for Use with Backhoe on 2025R, 2032R, 2320, 2520, 2720, 4100, 4110, and 4115 Tractors* *Equipped with Dual SCV.*	455.40
		Mountings and Hardware for Tractors:	
	LVB24842	Subframe Mounting Kit (For 2025R, 2320 Tractors with 46 Backhoe)	1,201.20
	LVB25883	Subframe Mounting Kit (For 2032R, 2520, 2720 Tractors with 46 Backhoe)	1,201.20
	LVB25417	Subframe Mounting Kit (For 4100, 4110 Tractors with 46 Backhoe)	1,201.20
	LVB24843	Subframe Mounting Kit (For 4115 Tractors with 46 Backhoe)	1,201.20
		Operator Environment:	
	LVB25573	Tall ROPS Upper Hoop Kit *Required for Use with 46 Backhoe on 4100, 4110, 4115 Tractors.*	212.30
		Operator Manual and Decal Kit:	
	LVB25581	Operator's Manual and Decal Kit - French	No Charge

375 Backhoe (For 3120-3720, 4105, 4300-4400, 4310-4410 Tractors)

Equipment for Base Machine

7 ft. 8 In. (2.3 m) Digging Depth
Quik-Tatch Mounting
Two Double Acting Swing Cylinders
180 Degree Swing
Narrow Control Console
Two Lever Control
Six Spool Control Valve Hydraulics
9 In. Bucket
Operator's Seat with Transport Lock
Hydraulic Stabilizers with Flip-Over Pads
Rockshaft Assist Mounting Brackets and Hardware for 3120-3720, 4105 Open Station Tractors

CODE	ATTACHMENT IDENTIFIER	DESCRIPTION	SUGGESTED LIST PRICE USD ($)

Select One Code From Each Required Category

BASE MACHINE

F.O.B. Davenport, Iowa

6120LV		375 Backhoe (For 3120-3720, 4105, 4300-4400, 4310-4410 Tractors) *Tractor's Must be Equipped with a Front Loader and Power Beyond Kit. 4105 Tractor Requires LVB25930 Parking Extension Kit. See Sales Manual for 4300-4400, 4310-4410 Tractor/Backhoe Requirements.*	8,450.00

MOUNTING BRACKETS AND HARDWARE FOR TRACTOR

1002		Rockshaft Assist Mounting Brackets and Hardware for 3120-3720, 4105 Open Station Tractors	In Base Price
1004		Rockshaft Assist Mounting Brackets and Hardware for 4300-4400 and 4310-4410 Tractors with Heavy Duty Sub-Frame	491.00
1005		Rockshaft Assist Mounting Brackets and Hardware for 3320-3720 Cab Tractors	315.00
1010		Less Mounting Brackets and Hardware	-470.00

Buckets:

3000		9 In. Bucket (0.64 Cu. Ft.)	In Base Price
3001		13 In. Bucket (1.04 Cu. Ft.)	47.00
3002		16 In. Bucket (1.33 Cu. Ft.)	78.00
3003		20 In. Bucket (1.74 Cu. Ft.)	153.00
3004		24 In. Bucket (2.14 Cu. Ft.)	210.00
3005		36 In. Bucket (3.34 Cu. Ft.)	352.00
3010		Less Bucket	-351.00

ATTACHMENTS - ORDER AS DESIRED

375 Backhoe (For 3120-3720, 4105, 4300-4400, 4310-4410 Tractors)

Continued

CODE	ATTACHMENT IDENTIFIER	DESCRIPTION	SUGGESTED LIST PRICE USD ($)
		ATTACHMENTS - ORDER AS DESIRED Continued...	
		Spanish North American Kit:	
9430		Spanish North American Operator's Manual and Decal Kit	No Charge
		ATTACHMENTS FOR FIELD CONVERSION	
		Buckets:	
	BM19558	13 In. Bucket (1.04 Cu. Ft.)	469.70
	BM19559	16 In. Bucket (1.33 Cu. Ft.)	506.00
	BM19560	20 In. Bucket (1.74 Cu. Ft.)	595.10
	BM19561	24 In. Bucket (2.14 Cu. Ft.)	662.20
	BM19562	36 In. Bucket (3.34 Cu. Ft.)	829.40
	BM19557	9 In. Bucket (0.64 Cu. Ft.)	413.60
		Hydraulics:	
	LVB25085	Power Beyond Kit *Includes Rear Mounted Hydraulic Couplers and Hoses for Use with Backhoe on 4310-4410 Tractors.*	335.50
	LVB25781	Power Beyond Kit (Cab Tractors Only) *Includes Rear Mounted Hydraulic Couplers and Hoses for Use with Backhoe on 3120-3720 Cab Tractors. Not compatible with MY2011 tractors. See sales manual for details.*	396.00
	LVB26069	Power Beyond Kit (Cab Tractors Only) *Includes Rear Mounted Hydraulic Couplers and Hoses for use with Backhoe on 3120-3720 Cab Tractors. Starting with MY2011. Not backward compatible. See Sales Manual for MY2011 serial number break.*	412.50
	LVB25505	Power Beyond Kit (Open Station Only) *Includes Rear Mounted Hydraulic Couplers and Hoses for Use with Backhoe on 3120-3720, 4105 Open Station Tractors. Not compatible with MY2011 tractors. See sales manual for details.*	334.40
	LVB26064	Power Beyond Kit (Open Station Only) *Includes Rear Mounted Hydraulic Couplers and Hoses for Use with Backhoe on 3120-3720, 4105 Open Station Tractors. Starting with MY2011. Not backward compatible. See Sales Manual for MY2011 serial number break.*	412.50
	LVB25221	Power Beyond Kit with RCV Filter *Includes Rear Mounted Hydraulic Couplers and Hoses for Use with Backhoe on 4300-4400 Tractors.*	408.10
		Miscellaneous:	
	BM19556	Rubber Street Pad Kit	138.60
	LVB25238	Stablizer Cylinder Protection Kit	177.10
	LVB26056	Thumb *Only compatible with a 2010 model or later backhoe with a serial number greater than LV0375X030000. Not compatible with 9 In. Budket (BM19557).*	787.60

375 Backhoe (For 3120-3720, 4105, 4300-4400, 4310-4410 Tractors)

Continued

CODE	ATTACHMENT IDENTIFIER	DESCRIPTION	SUGGESTED LIST PRICE USD ($)
		ATTACHMENTS FOR FIELD CONVERSION Continued...	
		Mountings and Hardware for Tractors:	
	LVB24795	Heavy-Duty Subframe Kit *See Sales Manual for 4300-4400, 4310-4410 Tractor/Backhoe Requirements.*	579.70
	LVB25611	Rockshaft Assist Mounting Brackets and Hardware (3120-3720 Open Station Tractors)	553.30
	BM19564	Rockshaft Assist Mounting Brackets and Hardware (4300-4400, 4310-4410)	553.30
	LVB26149	Rockshaft Assist Mounting Brackets and Hardware (3320-3720 Cab Tractors)	922.90
		Operator Manual and Decal Kit:	
	BLV10058	Spanish North American Operator's Manual and Decal Kit	17.60

485 Backhoe
(For 3120-3720 Open Station, 4120-4720, 4300-4400, 4310-4410, 4500-4700, 4510-4710, 5045E-5075E, 5103-5403 Tractors)

Equipment for Base Machine

8 ft. 9 In.(2.7 m) Digging Depth
Quick-Tatch Mounting
Two Double Acting Swing Cylinders
180 Degree Swing
Narrow Control Console
Two Lever Control
Six Spool Control Valve Hydraulics
12 In. Bucket
Operator's Seat with Transport Locks
Hydraulic Stabilizers with Flip-Over Pads
Rockshaft Assist Mounting Brackets, Hardware and Adapter Frame Plate for 4510-4710 and 4120-4720 Tractors

CODE	ATTACHMENT IDENTIFIER	DESCRIPTION	SUGGESTED LIST PRICE USD ($)
		Select One Code From Each Required Category	
		BASE MACHINE	
		F.O.B. Davenport, Iowa	
6131LV		485 Backhoe (For 3120-3720 Open Station, 4120-4720, 4300-4400, 4310-4410, 4500-4700, 4510-4710, 5045E-5075E, 5103-5403 Tractors) *Does Not Fit Cab 3320-3720 Tractors. Tractors Must be Equipped with a Front Loader and Power Beyond Kit. Installation of LVB25628 PRT Oil Cooler Kit is Recommended for 4000 Twenty Series Tractors with a PRT Trans. and Equipped with a Backhoe that will be used for Extended Continuous Periods of Time. See Sales Manual for 4300 Through 4710 Tractor/Backhoe Requirements.*	9,850.00
		MOUNTING BRACKETS AND HARDWARE FOR TRACTOR	
1001		Rockshaft Assist Mounting Brackets and Hardware (4300-4400, 4310-4410) with Heavy Duty Sub-Frame	-264.00
1005		Rockshaft Assist Mounting Brackets and Hardware (3120-3720 Open Station Tractors)	-430.00
1006		Subframe Mounting Brackets, Hydraulics and Hardware For 5045E-5075E Series Tractors and 5103-5403 Series Tractors *Compatible with serial numbers after PY5103UO13641, PY5203U005570, PY5303U007753, and PY5403U000735.*	108.00
1007		Rockshaft Assist Mounting Brackets and Hardware (4120-4720. See notes below on 4500-4700 and 4510-4710) *4320-4720 Cab Tractors Equipped with Mid-PTO Require LVB25876 Cab/Backhoe/Mid PTO Additional Mounting Kit. See Sales Manual for Serial Numbers. For 4500-4700 and 4510-4710 Tractors Manufactured Before Nov. '02, See Sales Manual for Additional Required Service Parts.*	In Base Price
1010		Less Mounting Brackets and Hardware	-899.00
		ADAPTER FRAME FOR BACKHOE	
2000		Adapter Frame Weldment Plate (3120-3720, 4300-4400, 4310-4410)	-41.00

485 Backhoe
(For 3120-3720 Open Station, 4120-4720, 4300-4400, 4310-4410, 4500-4700, 4510-4710, 5045E-5075E, 5103-5403 Tractors)

Continued

CODE	ATTACHMENT IDENTIFIER	DESCRIPTION	SUGGESTED LIST PRICE USD ($)
		ADAPTER FRAME FOR BACKHOE Continued...	
2003		Adapter Frame Weldment Plate (4120-4720, 4500-4700 and 4510-4710)	In Base Price
2010		Less Adapter Frame Weldment Plate	-934.00
		Buckets:	
3000		12-Inch Bucket (1.53 Cu. Ft.)	In Base Price
3001		18-Inch Bucket (2.47 Cu. Ft.)	75.00
3002		24-Inch Bucket (3.48 Cu. Ft.)	158.00
3003		36-Inch Bucket (5.50 Cu. Ft.)	300.00
3010		Less Bucket	-596.00
		ATTACHMENTS - ORDER AS DESIRED	
		Spanish North American Kit:	
9430		Spanish North American Operator's Manual and Decal Kit	No Charge
		ATTACHMENTS FOR FIELD CONVERSION	
		Backhoe Adapter Frames:	
	LVB25613	Adapter Frame Weldment Plate (3120-3720, 4300-4400, 4310-4410)	1,020.80
	LVB26163	Adapter Frame Weldment Plate (4500-4700 and 4510-4710)	1,098.90
		Buckets:	
	BM19568	12 In. Standard Bucket (1.53 Cu. Ft.)	702.90
	LVB25173	14 In. Heavy Duty Bucket (1.74 Cu. Ft.)	777.70
	LVB25174	18 In. Heavy Duty Bucket (2.68 Cu. Ft.)	854.70
	BM19569	18 In. Standard Bucket (2.47 Cu. Ft.)	792.00
	LVB25175	24 In. Heavy Duty Bucket (3.71 Cu. Ft.)	957.00
	BM19570	24 In. Standard Bucket (3.48 Cu. Ft.)	888.80
	LVB25176	36 In. Heavy Duty Bucket (5.76 Cu. Ft.)	1,162.70
	LVB25177	40 In. Heavy Duty Bucket (6.41 Cu. Ft.)	1,241.90
		Hydraulics:	
	LVB25085	Power Beyond Kit *Includes Rear Mounted Hydraulic Couplers and Hoses for Use with Backhoe on 4310-4410 Tractors.*	335.50
	LVB25780	Power Beyond Kit (Cab Only) *Includes Rear Mounted Hydraulic Couplers and Hoses for Use with Backhoe on 4320-4720 Cab Tractors.*	336.60

485 Backhoe
(For 3120-3720 Open Station, 4120-4720, 4300-4400, 4310-4410, 4500-4700, 4510-4710, 5045E-5075E, 5103-5403 Tractors)

Continued

CODE	ATTACHMENT IDENTIFIER	DESCRIPTION	SUGGESTED LIST PRICE USD ($)
		ATTACHMENTS FOR FIELD CONVERSION Continued...	
	LVB26071	Power Beyond Kit (Cab Only) *Starting with MY2011. Not backward compatible. See Sales Manual for MY2011 serial number break.*	412.50
	LVB25505	Power Beyond Kit (Open Station Only) *Includes Rear Mounted Hydraulic Couplers and Hoses for Use with Backhoe on 3120-3720, 4105 Open Station Tractors. Not compatible with MY2011 tractors. See sales manual for details.*	334.40
	LVB25512	Power Beyond Kit (Open Station Only) *Includes Rear Mounted Hydraulic Couplers and Hose for Use with Backhoe on 4510-4710 and 4120-4720 Open Station Tractors. Not compatible with MY2011 tractors. See sales manual for details.*	317.90
	LVB26064	Power Beyond Kit (Open Station Only) *Includes Rear Mounted Hydraulic Couplers and Hoses for Use with Backhoe on 3120-3720, 4105 Open Station Tractors. Starting with MY2011. Not backward compatible. See Sales Manual for MY2011 serial number break.*	412.50
	LVB26066	Power Beyond Kit (Open Station Only) *Includes Rear Mounted Hydraulic Couplers and Hose for Use with Backhoe on 4510-4710 and 4120-4720 Open Station Tractors. Starting with MY2011. Not backward compatible. See Sales Manual for MY2011 serial number break.*	412.50
	LVB25220	Power Beyond Kit with RCV Filter *Includes Rear Mounted Hydraulic Couplers and Hoses for Use with Backhoe on 4500-4700 Tractors.*	354.20
	LVB25221	Power Beyond Kit with RCV Filter *Includes Rear Mounted Hydraulic Couplers and Hoses for Use with Backhoe on 4300-4400 Tractors.*	408.10
		Miscellaneous:	
	LVB26039	Creep to Reposition Kit *Only compatible with 4520 and 4720 tractors starting with Model Year 2011, and the latest 485 Backhoe LVB26189 and Adaptor LVB26163. Ensure software is LVA16028P or later. Previous software versions are not compatible with this kit.*	957.00
	BM19556	Rubber Street Pad Kit	138.60
	LVB25239	Stabilizer Cylinder Protection Kit	177.10
	LVB26057	Thumb *Only compatible with a 2010 model or later backhoe with a serial number greater than LV0485X030000. Not compatible with 12 In. Standard Bucket (BM19568) or 14 In. Heavy Duty Bucket (LVB25173).*	1,014.20
		Mountings and Hardware for Tractors:	
	LVB25876	Cab/Backhoe/Mid PTO Additional Mounting Kit *Required in addition to Order Code 1003 for 4320-4720 Cab Tractors Equipped with Mid PTO.*	114.40
	LVB24795	Heavy-Duty Subframe Kit *Required for Use on 4300-4400, 4310-4410 Tractors with a 48, 448 or 485 Backhoe.*	579.70

485 Backhoe
(For 3120-3720 Open Station, 4120-4720, 4300-4400, 4310-4410, 4500-4700, 4510-4710, 5045E-5075E, 5103-5403 Tractors)

Continued

CODE	ATTACHMENT IDENTIFIER	DESCRIPTION	SUGGESTED LIST PRICE USD ($)
		ATTACHMENTS FOR FIELD CONVERSION Continued...	
	LVB25611	Rockshaft Assist Mounting Brackets and Hardware (3120-3720 Open Station Tractors)	553.30
	LVB26148	Rockshaft Assist Mounting Brackets and Hardware (4120-4720. See notes below on 4500-4700 and 4510-4710) *4320-4720 Cab Tractors Equipped with Mid-PTO Require LVB25876 Cab/Backhoe/Mid PTO Additional Mounting Kit. See Sales Manual for Serial Numbers. For 4500-4700 and 4510-4710 Tractors Manufactured Before Nov. '02, See Sales Manual for Additional Required Service Parts.*	1,059.30
	BM19564	Rockshaft Assist Mounting Brackets and Hardware (4300-4400, 4310-4410)	553.30
	LVB26092	Subframe Mounting Brackets, Hydraulics and Hardware For 5045E-5075E Series Tractors and 5103-5403 Series Tractors *Compatible with serial numbers after PY5103UO13641, PY5203U005570, PY5303U007753, and PY5403U000735.*	2,192.30
		Operator Manual and Decal Kit:	
	BLV10058	Spanish North American Operator's Manual and Decal Kit	17.60
		Transmission:	
	LVB25865	PRT Oil Cooler Kit *Required for 4120-4720 PRT Tractors*	280.50

270A Backhoe (For 2025R, 2320 Tractors)

Equipment for Base Machine

7 ft. Digging Depth
One Double Acting Swing Cylinder
150 Degree Swing
Narrow Control Console
Two Lever Control
Six Spool Control Valve Hydraulics
8 In. Bucket
Operator's Seat
Hydraulic Stabilizers
Subframe Mounting (3 Point Hitch Assist)
Transport Locks

CODE	ATTACHMENT IDENTIFIER	DESCRIPTION	SUGGESTED LIST PRICE USD ($)
		Select One Code From Each Required Category	
		BASE MACHINE	
		F.O.B. Davenport, Iowa	
6150LV		270A Backhoe (For 2025R, 2320 Tractors) *Tractors Must be Equipped with a Front Loader and Power Beyond Kit. Mechanical mower lift system will not work with backhoe mounted.*	8,025.00
		Buckets:	
3001		8 In. Bucket (0.63 Cu. Ft.)	In Base Price
3002		12 In. Bucket (0.90 Cu. Ft.)	61.00
3003		16 In. Bucket (1.31 Cu. Ft.)	106.00
		SUBFRAME MOUNTING	
1003		Subframe Mounting (For 2025R, 2320 Tractors)	In Base Price
1010		Less Subframe Mounting	-1,263.00
		ATTACHMENTS FOR FIELD CONVERSION	
		Buckets:	
	BLV10025	12 In. Bucket (0.66 Cu. Ft.)	443.30
	BLV10026	16 In. Bucket (0.90 Cu. Ft.)	492.80
	BLV10024	8 In. Bucket (0.42 Cu. Ft.)	376.20
		Hydraulics:	
	LVB25603	Power Beyond Kit *Includes Rear Mounted Hydraulic Couplers and Hose for Use with Backhoe on 2320 Tractors.* *Equipped with Dual SCV.* *Not Compatible with Third SCV kit BLV1038/LVB26166*	357.50
		Miscellaneous:	
	BM19556	Rubber Street Pad Kit	138.60
	BLV10023	Thumb *Not compatible with 8 In. Bucket (BLV10024).*	658.90

270A Backhoe (For 2025R, 2320 Tractors)

Continued

CODE	ATTACHMENT IDENTIFIER	DESCRIPTION	SUGGESTED LIST PRICE USD ($)
		ATTACHMENTS FOR FIELD CONVERSION Continued...	
		Mountings and Hardware for Tractors:	
	BLV10021	Subframe Mounting Kit (For 2025R, 2320 Tractors with 270A Backhoe)	1,489.40

54 In. Quick-Hitch Front Blade (For X400/X500 HDGT's, X700's, 425-455, 1023E, 1025R, 1026R, 2210, 2305, 2025R, 2032R, 2320, 2520, 2720, 4010, 4100, 4110 and 4115 Tractors)

Equipment for Base Machine

```
54 In. Clearing Width
 "Straight"
48 In. Clearing Width
 "Fully Angled"
Replaceable Cutting Edge
Heavy 11-Gauge, Curved Blade
Angled Left or Right Up
 to 27 Degrees
Two Adjustable Skid Shoes
Reinforced Angle Bar on
 Back of Blade
Spring Breakaway with
 Lock-Out Pin
Less Front Hitch
Less Hydraulic Angling
```

CODE	ATTACHMENT IDENTIFIER	DESCRIPTION	SUGGESTED LIST PRICE USD ($)
		Select One Code From Each Required Category	
		BASE MACHINE	
		F.O.B. Davenport, Iowa	
1491M		54 In. Quick-Hitch Front Blade (For X400/X500 HDGT's, X700's, 425-455, 1023E, 1025R, 1026R, 2210, 2305, 2025R, 2032R, 2320, 2520, 2720, 4010, 4100, 4110 and 4115 Tractors) *X700, X710, X465, X475 and 425 Require BM20761 Hydraulic Coupler Kit.* *Compact Tractors Require Dual Selective Control Valve and Front Attaching Support Kit. See Sales Manual for Front Attaching Support Requirements.* *See Sales Manual for Ballast Requirements.*	515.00
		FRONT QUICK-HITCH	
1000		Front Quick-Hitch and Hydraulic Lift (For X400/X500 HDGT's, X700's)	603.00
1001		Front Quick-Hitch and Hydraulic Lift (425, 445, 455)	625.00
1006		Front Quick-Hitch and Hydraulic Lift (2210, 2305)	641.00
1007		Front Quick-Hitch and Hydraulic Lift (2025R, 2032R, 2320, 2520, 2720, 4010, 4100, 4110, 4115)	688.00
1008		Front Quick-Hitch and Hydraulic Lift(1023E, 1025R, 1026R)	688.00
1010		Less Front Quick-Hitch	In Base Price
		HYDRAULIC ANGLING (REQUIRED FOR OPERATION)	
2000		Hydraulic Angling (For X400/X500 HDGT's, X700's) *BM20761 Hydraulic Coupler Kit Required on X700, X710, X465 and X475.*	186.00
2001		Hydraulic Angling (425, 445, 455) *BM20761 Hydraulic Coupler Kit Required on 425 Tractor.*	161.00
2005		Hydraulic Angling (2210, 2305)	187.00
2006		Hydraulic Angling (2025R, 2032R, 2320, 2520, 2720, 4010, 4100, 4110, 4115)	193.00

54 In. Quick-Hitch Front Blade (For X400/X500 HDGT's, X700's, 425-455, 1023E, 1025R, 1026R, 2210, 2305, 2025R, 2032R, 2320, 2520, 2720, 4010, 4100, 4110 and 4115 Tractors)

Continued

CODE	ATTACHMENT IDENTIFIER	DESCRIPTION	SUGGESTED LIST PRICE USD ($)
		HYDRAULIC ANGLING (REQUIRED FOR OPERATION) Continued...	
2007		Hydraulic Angling (1023E, 1025R, 1026R)	187.00
2010		Less Hydraulic Angling	In Base Price
		ATTACHMENTS - ORDER AS DESIRED	
		European CE Kit:	
9100		European CE Certification Kit	No Charge
		ATTACHMENTS FOR FIELD CONVERSION	
		Front Hitch:	
	LVB26047	Front Quick-Hitch and Hydraulic Lift (1023E, 1025R, 1026R)	788.59
	LVB24898	Front Quick-Hitch and Hydraulic Lift (2025R, 2032R, 2320 - 2720) *Fits also 4010, 4100, 4110 and 4115 Tractors for 47SB only.*	788.59
	BM20921	Front Quick-Hitch and Hydraulic Lift (2305) *Fits also 2210 Tractors (for 47SB only).*	736.16
	BM17347	Front Quick-Hitch and Hydraulic Lift (415, 425, 445, 455)	715.83
	BM19782	Front Quick-Hitch and Hydraulic Lift (X400/X500 HDGT's, X700's)	692.29
		Hydraulics:	
	LVB26108	Hydraulic Angling (1023E, 1025R, 1026R)	215.07
	LVB24901	Hydraulic Angling (2025R, 2032R, 2320, 2520, 2720, 4010, 4100, 4110, 4115)	220.41
	BM17650	Hydraulic Angling (415, 425, 445, 455)	185.11
	BM20837	Hydraulic Angling (X400/X500 HDGT's, X700's)	212.93
	BM20922	Hydraulic Angling Kit (2210, 2305)	215.07
	BM20761	Hydraulic Coupler Kit *Required on X700, X465, X475 and 425 Tractors.*	54.57
		Miscellaneous:	
	BM20714	Click-N-Go Bracket (X400/X500 HDGT's, X700's)	112.36
	LVB25302	Front Attaching Support Kit *For 2520, 2720, 4100, 4110, 4115 Tractors. See Sales Manual for Front Attaching Support Requirements.*	59.91
	LVB26046	Front Attaching Support Kit (1023E, 1025R, 1026R) *See Sales Manual for Front Attaching Support Requirements.*	67.41
	LVB24895	Front Attaching Support Kit (2025R, 2320) *See Sales Manual for Front Attaching Support Requirements.*	82.39
	LVB25396	Front Attaching Support Kit (2305) *Fits also 2210 Tractors (for 47SB only.) See Sales Manual for Front Attaching Support Requirements.*	59.91

54 In. Quick-Hitch Front Blade (For X400/X500 HDGT's, X700's, 425-455, 1023E, 1025R, 1026R, 2210, 2305, 2025R, 2032R, 2320, 2520, 2720, 4010, 4100, 4110 and 4115 Tractors)

Continued

CODE	ATTACHMENT IDENTIFIER	DESCRIPTION	SUGGESTED LIST PRICE USD ($)
		ATTACHMENTS FOR FIELD CONVERSION Continued...	
	LVB24899	Front Hitch/Mid-Mount Mower Combo Bracket (2025R, 2032R, 2320-2720) *Compatible with 4115 Tractor also. Required for Tool Free Change Between 54D or 62D OnRamp Mid-Mount Mower and Quik-Tatch Front Hitch (2025R, 2032R, 2320, 2520, 2720, 4115).*	127.33
	BM20753	Front Light Kit *For X400/X500 HDGT and X700 Series Garden Tractors.*	207.59
	AM119321	Heavy Duty Skid Shoe (1)	See Parts
	TY15956	Tire Chains (Pair) for 23x10.50-12 In. Drive Tires *All Wheel Steer Tractors with Standard 23x10.50-12 In. Tires Require BM18021 Wheel Spacer Kit to Provide Clearance Between Tire Chains and Steering Linkage.*	See Parts
	TY15845	Tire Chains (Pair) for 23x10.50-12 In. Rear Tires (318, 322, 332)	See Parts
	TY15841	Tire Chains (Pair) for 23x8.50-12 In. Drive Tires	See Parts
	BM22725	Wheel Spacer Kit *For all Wheel Steer Tractors when Installing TY15956 Chains.*	157.29
		Order Zone:	
	LP54000	54 In. Tractor Shovel *For X400/X500 HDGT's and X700's Only. Go to Order Zone for Specific Requirements.*	In Catalog
		Seats / Wheels / Tires:	
	TY15958	Tire Chains (Pair) for 26x12-12 Tires	See Parts
		Weights:	
	BM20715	Ballast Box (Click-N-Go) (X400/X500 HDGT's, X700's) *Requires BM20714 Click-N-Go Bracket.*	283.56
	R66949	Quik-Tatch Weight, 42 Lb.	62.06
	BM20779	Rear Click-N-Go Weight Bracket (X400/X500 HDGT's, X700's) *Requires BM20714 Click-N-Go Bracket.*	156.21

366 Front Mounted Blade (For 3120-3720 Tractors)

Equipment for Base Machine

66 In. Blade with Spring Trip
Hydraulic Angling
Skid Shoes
A-frame Quick Change System (Common with 59 In. Snow Blower)
Hydraulic Hoses
Mounting Frame

CODE	ATTACHMENT IDENTIFIER	DESCRIPTION	SUGGESTED LIST PRICE USD ($)
		Select One Code From Each Required Category	
		BASE MACHINE	
		F.O.B. Davenport, Iowa	
6004M		366 Front Mounted Blade (For 3120-3720 Tractors) *Not for use with 4200-4410 Tractors.* *3120-3720 Tractors with Mid-Mount Mowers for use with Front Three-Point Hitch with A-Frame require LVB25820 (AutoConnect decks) or LVB24810 (old 7-Iron decks)*	3,600.00
		FRONT HITCH	
1000		Front Three-Point Hitch with A-Frame Quick Attach System (3120-3720)	In Base Price
1010		Less Front Three-Point Hitch with A-Frame Quick Attach System	-1,328.00
		ATTACHMENTS FOR FIELD CONVERSION	
		Front Hitch:	
	LVB24797	A-Frame Quick Attach System (3120-3720)	190.46
	BM20921	Front Quick-Hitch and Hydraulic Lift (2305) *Fits also 2210 Tractors (for 47SB only).*	736.16
	LVB25878	Front Three-Point Hitch (3120-3720)	1,248.69
		Front PTO:	
	LVB25759	Front PTO Bracket (3120-3720)	82.39
		Miscellaneous:	
	LVB25820	Front Three-Point Hitch/Mid Mount Brackets *Required for use with LVB24815 Front Three-Point Hitch with A-Frame (3120-3720 Tractors Only)and AutoConenct Mowers.*	166.10
	LVB24810	Front Three-Point Hitch/Mid Mount Mower Draft Arms *Required for use with LVB25878 Front Three-Point Hitch with A-Frame (3120-3720 Tractors Only) and old 7-Iron Mid-Mount Mowers.*	228.99

84 Front Mounted Blade (For 4500-4700, 4510-4710 Tractors)

Equipment for Base Machine

84 In. Blade with Spring Trip
Hydraulic Angling
Skid Shoes
Lift Cylinder
Hydraulic Hoses
Mounting Frame

CODE	ATTACHMENT IDENTIFIER	DESCRIPTION	SUGGESTED LIST PRICE USD ($)
		Select One Code From Each Required Category	
		BASE MACHINE	
		F.O.B. Davenport, Iowa	
3680M		84 Front Mounted Blade (For 4500-4700, 4510-4710 Tractors) *Tractor Requires Dual Selective Control Valve.* *Not for Use with 4120-4720 Tractors.*	3,655.00

iMatch Quick Hitch

CODE	ATTACHMENT IDENTIFIER	DESCRIPTION	SUGGESTED LIST PRICE USD ($)
		ATTACHMENTS FOR FIELD CONVERSION	
		AutoHitch Implement Side Components - Tillers:	
	LVB25621	AutoHitch Implement Components for John Deere 647 *LVB24978 AutoHitch Retrofit Kit is Required for Proper Installation on 647 Tillers With Serial Numbers Prior to LV0647B010001.*	226.60
	LVB25622	AutoHitch Implement Components for John Deere 655 *LVB24946 AutoHitch Retrofit Kit is Required for Proper Installation on 655 Tillers With Serial Numbers Prior to LV0655B010001.*	266.20
	LVB25676	AutoHitch Implement Components for John Deere 665, 673 *LVB25744 AutoHitch Retrofit Kit is Required for Proper Installation on 665 Tillers With Serial Numbers Prior to LV0665B010001, and 673 Tillers With Serial Numbers Prior to LV0673B010001.*	300.30
	LVB25677	AutoHitch Implement Components for John Deere 681 *LVB25588 AutoHitch Retrofit Kit is Required for Proper Installation on 681 Tillers With Serial Numbers Prior to LV0681B010001.*	311.30
	LVB24978	AutoHitch Retrofit Kit (647 Tiller) *Required for Proper Installation on 647 Tillers With Serial Numbers Prior to LV0647B010001.*	132.00
	LVB24946	AutoHitch Retrofit Kit (655 Tiller) *Required for Proper Installation on 655 Tillers With Serial Numbers Prior to LV0655B010001.*	166.10
	LVB25744	AutoHitch Retrofit Kit (665, 673 Tiller) *Required for Proper Installation on 665 Tillers With Serial Numbers Prior to LV0665B010001, and 673 Tillers With Serial Numbers Prior to LV0673B010001.*	166.10
		Hitch:	
	LVB25976	iMatch Quick Hitch Category 1 with adjustable top hook	350.90
		Miscellaneous:	
	LVB25821	AutoHitch DVD	3.57
	LVB24964	AutoHitch Implement Components for Frontier RC1048, RC1060, RC2048, RC2060 John Deere LX4, LX5 Rotary Cutters *LX4 and LX5 Require (2) LVU19248 From Service Parts.*	416.90
	LVB24965	AutoHitch Implement Components for Frontier RC1072, RC2072 & John Deere LX6 Rotary Cutters *LX6 Require (2) LVU19248 From Service Parts.*	368.50
	LVB24961	AutoHitch Implement Components for John Deere MX5 Rotary Cutter	434.50
	LVB24963	AutoHitch Implement Components for John Deere MX6 Rotary Cutter	368.50
	LVU19248	LX AutoHitch Lower Bushing *(2) Required per LX Rotary Cutter.*	See Parts
	LVB25675	iMatch AutoHitch PTO Coupler	513.63

300 Loader

Equipment for Base Machine

Quik-Park Loader Mounting System
Quik Change Attachment Carrier
Mounting Frame
Hood Guard
Bucket Level Indicator

61 In.(1550 mm) Materials Bucket
Less Ballast Box

CODE	ATTACHMENT IDENTIFIER	DESCRIPTION	SUGGESTED LIST PRICE USD ($)
		Select One Code From Each Required Category	
		BASE MACHINE	
		EX-WORKS Laredo, Texas: Martinez, Georgia; Waterloo, Iowa; Frisco, Texas; Grimsby, Ontario	
2491P		300 Loader *For 3005, 790, 770, 3203 Tractors.*	3,737.00
		TRACTOR MOUNTING FRAME	
2000		Mounting Frame, Hoses and Hood Guard (790 Serial No. LV0790G790001-) *770, 790 Hood Guard (BW15350) is Required to Install Loader.*	Same Price
2010		Mounting Frame and Hoses (770, 790 Serial No. - LV0790G790000) *770, 790 Hood Guard (BW15350) is Required to Install Loader.*	212.00
2020		Mounting Frame, Hoses and Hood Guard (3203)	-210.00
2030		Mounting Frame, Hoses amd Hood Guard (3005)	In Base Price
2095		Less Mounting Frame, Hoses and Hood Guard	-899.00
		BALLAST	
		Three Point Hitch Ballast is Required For Loader Stability. See Operator's Manual For Ballast Recommendations. For Ballast Box Use with iMatch Quik Hitch, Code 9090 or BW15056 is Required.	
4000		Ballast Box	223.00
4010		Ballast Box with Extension	329.00
4095		Less Ballast Box	In Base Price
		BUCKET	
		Additional Bucket Options are Available as "9000" Codes.	
8000		61 In. (1550 mm) Materials Bucket	In Base Price
8095		Less Bucket	-699.00

ATTACHMENTS - ORDER AS DESIRED

300 Loader
Continued

CODE	ATTACHMENT IDENTIFIER	DESCRIPTION	SUGGESTED LIST PRICE USD ($)
		ATTACHMENTS - ORDER AS DESIRED Continued...	
		Miscellaneous:	
9090		iMatch / Quik-Coupler Bushing Kit	82.00
9095		Australian Code of Practice Kit *Kit Includes Australian Warning Labels.*	No Charge
		Buckets:	
9015		53 In. (1350mm) Loader Materials Bucket - Quik Change	714.00
9020		61 In. (1550mm) Loader Materials Bucket - Quik Change	749.00
9025		73 In. (1850mm) Loader Materials Bucket	859.00
9030		61 In. (1550 mm) Loader Heavy Duty Bucket with Holes for Cutting Edge	916.00
		Cutting Edges:	
9080		61 In. (1550 mm) Replaceable Bucket Cutting Edge with Hardware	141.00
9082		73 In. (1850 mm) Replaceable Bucket Cutting Edge with Hardware	171.00
		Spanish North American Kit:	
9100		Spanish North American Operator's Manual and Decal Kit	No Charge
		Tooth Bars:	
9070		61 In. (1550 mm) Tooth Bar for Bucket	422.00
9072		73 In. (1850 mm) Tooth Bar for Bucket	490.00
		ATTACHMENTS FOR FIELD CONVERSION	
		Ballast Box:	
	BW15073	Ballast Box	269.50
	BW15074	Ballast Box Extension	128.70
		Buckets:	
	BW14145	53 In. (1350mm) Loader Materials Bucket - Quik Change	785.40
	BW14764	61 In. (1550 mm) Loader Heavy Duty Bucket with Holes for Cutting Edge	1,007.60
	BW14146	61 In. (1550mm) Loader Materials Bucket - Quik Change	823.90
	BW14147	73 In. (1850mm) Loader Materials Bucket	944.90
		Cutting Edges:	
	BW14762	61 In. (1550 mm) Replaceable Bucket Cutting Edge with Hardware	155.10
	BW14763	73 In. (1850 mm) Replaceable Bucket Cutting Edge with Hardware	188.10
		Hood Guards:	
	BW15848	Hood Guard (3005, 4005)	246.40
	BW15534	Hood Guard (3203)	251.90
	BW15350	Hood Guard (770, 790)	251.90

300 Loader
Continued

CODE	ATTACHMENT IDENTIFIER	DESCRIPTION	SUGGESTED LIST PRICE USD ($)
		ATTACHMENTS FOR FIELD CONVERSION Continued...	
		Miscellaneous:	
	BW15389	Australian Code of Practice Kit *Kit Includes Australian Warning Labels.*	See Parts
	BW15223	Bucket Level Indicator	62.70
	BW15349	Hoses and Parts *For 3005, 770, 790 Tractors.*	293.70
	BW15599	Hoses and Parts	336.60
	BW15357	Oil Line Conversion Kit *For 770, 790 Serial No. - LV0790G790000.*	243.10
	BW15056	iMatch / Quik-Coupler Bushing Kit	90.20
		Mounting Frames:	
	BW15206	Mounting Frame (3005, 770, 790) *3005, 770, 790 Hood Guard (BW15350) is Required to Install Loader.*	520.30
	BW15204	Mounting Frame (4200-4400, 4210-4400, 3120-3720, 3203 Open Station Tractors)	215.60
	BWA1199	Mounting Frame with Hoses and Parts and Hood Guard (770, 790 Serial No.- LV0790G790000)	1,309.00
	BWA1198	Mounting Frame with Hoses and Parts and Hood Guard (For 790 Serial No. LV0790G790001-)	1,065.90
	BWA1503	Mounting Frame with Hoses and Parts and Hood Guard (3005)	1,060.40
	BWA1355	Mounting Frame with Hoses and Parts and Hood Guard (3203)	804.10
		Tooth Bars:	
	BW15227	61 In. (1550 mm) Tooth Bar for Bucket	464.20
	BW15228	73 In. (1850 mm) Tooth Bar for Bucket	539.00

305 Loader

Equipment for Base Machine

Non Parking Loader
Quik Change Attachment Carrier
Mounting Frame
Hood Guard
Single Lever Control Value
(2 Function)

Tractor to Valve Oil Line Kit
61 In. (1550mm) Materials Bucket
Less Ballast Box

CODE	ATTACHMENT IDENTIFIER	DESCRIPTION	SUGGESTED LIST PRICE USD ($)
		Select One Code From Each Required Category	
		BASE MACHINE	
		EX-WORKS Laredo, Texas: Martinez, Georgia; Waterloo, Iowa; Frisco, Texas; Grimsby, Ontario	
2561P		305 Loader *For 3032E and 3038E Tractors.*	4,122.00
		TRACTOR MOUNTING FRAME	
1000		Mounting Frame	In Base Price
		HYRDAULIC CONTROLS	
2000		Single Lever Control Valve (2 Function) and Tractor to Valve Oil Line Kit	In Base Price
		BALLAST	
		Three Point Hitch Ballast is Required For Loader Stability. See Operator's Manual For Ballast Recommendations. For Ballast Box Use with iMatch Quik Hitch, Code 9090 or BW15056 is Required.	
4095		Less Ballast Box *Three Point Hitch Ballast Is Required For Loader Stability. Please Review the Tractor Ballast Requirements in the Sales Manual for Proper Ballasting. BW15073 Ballast Box and BW15074 Ballast Box Extension Available for Order Under Attachments for Field Conversion.*	In Base Price
		HOOD GUARD	
5000		Hood Guard	In Base Price
		BUCKET	
8122		61 In. (1550 mm) Materials Bucket	In Base Price

ATTACHMENTS - ORDER AS DESIRED

305 Loader
Continued

CODE	ATTACHMENT IDENTIFIER	DESCRIPTION	SUGGESTED LIST PRICE USD ($)
		ATTACHMENTS - ORDER AS DESIRED Continued...	
		Miscellaneous:	
9608		Australian Compliance Kit *Kit consists of:* *BW16288 - 305 Anti Spill Kit* *BW16289 - 305 Service Lock* *BW16244 - Australian Code of Practice.*	608.00
		Spanish North American Kit:	
9100		Spanish North American Operator's Manual and Decal Kit	No Charge
		ATTACHMENTS FOR FIELD CONVERSION	
		Ballast Box:	
	BW15073	Ballast Box	269.50
	BW15074	Ballast Box Extension	128.70
		Buckets:	
	BW15863	61 In. (1550mm) Loader Materials Bucket	830.50
		European CE Kit:	
	BW15834	European CE Conversion Kit, 305 Loader	See Parts
		Hood Guards:	
	LVB25998	Hood Guard *Hood Guard is Standard with Loader.*	246.40
		Miscellaneous:	
	BW16288	Anti Spill Kit *For 305 Loader - Australia Only*	451.00
	BW15872	Parking Stand Kit	393.80
	BW16289	Service Lock *For 305 Loader - Australia Only*	150.70
	BW15056	iMatch / Quik-Coupler Bushing Kit	90.20
		Spanish North American Kit:	
	BW15835	Spanish North American Operator's Manual and Decal Kit	0.00

300X Loader

Equipment for Base Machine

```
Quik-Park Loader Mounting System   Less Ballast Box
Quik Change Attachment Carrier
Mounting Frame
Hood Guard
Bucket Level Indicator
61 In.(1550 mm) Materials Bucket
```

CODE	ATTACHMENT IDENTIFIER	DESCRIPTION	SUGGESTED LIST PRICE USD ($)
		Select One Code From Each Required Category	
		BASE MACHINE	
		EX-WORKS Laredo, Texas: Martinez, Georgia; Waterloo, Iowa; Frisco, Texas; Grimsby, Ontario	
2521P		300X Loader *For 3120-3720, 3203, 4200-4400, 4210-4410 Tractors.*	4,369.00
		TRACTOR MOUNTING FRAME	
2000		Mounting Frame and Hoses (3120-3720, 3203 Open Station Tractors, 4200-4400, 4210-4410)	In Base Price
2005		Mounting Frame and Hoses (3320-3720 Cab Tractors)	Same Price
2095		Less Mounting Frame and Hoses	-469.00
		HOOD GUARD	
5000		Hood Guard (4200-4400, 4210-4410)	Same Price
5005		Hood Guard (3120-3720)	In Base Price
5010		Deluxe Hood Guard (3120-3720)	268.00
5030		Hood Guard (3203)	Same Price
5095		Less Hood Guard	-214.00
		BALLAST	
		Three Point Hitch Ballast is Required For Loader Stability. See Operator's Manual For Ballast Recommendations. For Ballast Box Use with iMatch Quik Hitch, Code 9090 or BW15056 is Required.	
4000		Ballast Box	223.00
4010		Ballast Box with Extension	329.00
4095		Less Ballast Box	In Base Price
		BUCKET	
		Additional Bucket Options are Available as "9000" Codes.	

300X Loader
Continued

CODE	ATTACHMENT IDENTIFIER	DESCRIPTION	SUGGESTED LIST PRICE USD ($)
		BUCKET Continued...	
8000		61 In. (1550 mm) Materials Bucket	In Base Price
8095		Less Bucket	-699.00
		ATTACHMENTS - ORDER AS DESIRED	
		Buckets:	
9015		53 In. (1350mm) Loader Materials Bucket - Quik Change	714.00
9020		61 In. (1550mm) Loader Materials Bucket - Quik Change	749.00
9025		73 In. (1850mm) Loader Materials Bucket	859.00
9030		61 In. (1550 mm) Loader Heavy Duty Bucket with Holes for Cutting Edge	916.00
		Cutting Edges:	
9080		61 In. (1550 mm) Replaceable Bucket Cutting Edge with Hardware	141.00
9082		73 In. (1850 mm) Replaceable Bucket Cutting Edge with Hardware	171.00
		Miscellaneous:	
9090		iMatch / Quik-Coupler Bushing Kit	82.00
9095		Australian Code of Practice Kit *Kit Includes Australian Warning Labels.*	No Charge
		Spanish North American Kit:	
9100		Spanish North American Operator's Manual and Decal Kit	No Charge
		Tooth Bars:	
9070		61 In. (1550 mm) Tooth Bar for Bucket	422.00
9072		73 In. (1850 mm) Tooth Bar for Bucket	490.00
		ATTACHMENTS FOR FIELD CONVERSION	
		Ballast Box:	
	BW15073	Ballast Box	269.50
	BW15074	Ballast Box Extension	128.70
		Buckets:	
	BW14145	53 In. (1350mm) Loader Materials Bucket - Quik Change	785.40
	BW14764	61 In. (1550 mm) Loader Heavy Duty Bucket with Holes for Cutting Edge	1,007.60
	BW14146	61 In. (1550mm) Loader Materials Bucket - Quik Change	823.90
	BW14147	73 In. (1850mm) Loader Materials Bucket	944.90
		Cutting Edges:	
	BW14762	61 In. (1550 mm) Replaceable Bucket Cutting Edge with Hardware	155.10
	BW14763	73 In. (1850 mm) Replaceable Bucket Cutting Edge with Hardware	188.10

300X Loader
Continued

CODE	ATTACHMENT IDENTIFIER	DESCRIPTION	SUGGESTED LIST PRICE USD ($)
		ATTACHMENTS FOR FIELD CONVERSION Continued...	
		Hood Guards:	
	BWA1190	Deluxe Hood Guard (3120-3720)	568.70
	BW15222	Deluxe Hood Guard Attachment	316.80
	BW14378	Hood Guard *For 4200-4400, 4210-4400 Tractors.*	259.60
	BW15219	Hood Guard (3120-3720)	251.90
	BW15534	Hood Guard (3203)	251.90
		Miscellaneous:	
	BW15389	Australian Code of Practice Kit *Kit Includes Australian Warning Labels.*	See Parts
	BW15223	Bucket Level Indicator	62.70
	BW15056	iMatch / Quik-Coupler Bushing Kit	90.20
		Mounting Frames:	
	BW15456	Mounting Frame (3320-3720, 4320-4720 Cab Tractors)	215.60
	BW15204	Mounting Frame (4200-4400, 4210-4400, 3120-3720, 3203 Open Station Tractors)	215.60
	BWA1191	Mounting Frame with Hoses (3203)	552.20
	BWA1248	Mounting Frame with Hoses and Parts (3320-3720 Cab Tractors)	552.20
		Tooth Bars:	
	BW15227	61 In. (1550 mm) Tooth Bar for Bucket	464.20
	BW15228	73 In. (1850 mm) Tooth Bar for Bucket	539.00

300CX Loader

Equipment for Base Machine

```
Quik-Park Loader Mounting System   Less Ballast Box
Quik Change Attachment Carrier
Mounting Frame
Hood Guard
Bucket Level Indicator
61 In.(1550 mm) Materials Bucket
```

CODE	ATTACHMENT IDENTIFIER	DESCRIPTION	SUGGESTED LIST PRICE USD ($)

Select One Code From Each Required Category

BASE MACHINE

EX-WORKS Laredo, Texas: Martinez, Georgia; Waterloo, Iowa; Frisco, Texas; Grimsby, Ontario

2532P	300CX Loader *For 3120-3720, 3203, 4005, 4105, 990, 970, 1070, 4300-4400, 4310-4410 Tractors.*	4,988.00

DESTINATION

Operator's Manual

0202	United States *Operator's Manual.*	In Base Price
0184	Canada *English Operator's Manual and French Operator's Manual, Decal Kit.*	Same Price
0230	Australia *Operator's Manual.*	Same Price
0237	New Zealand *Operator's Manual.*	Same Price

TRACTOR MOUNTING FRAME

2005	Mounting Frame and Hoses (3320-3720 Cab Tractors)	Same Price
2000	Mounting Frame and Hoses (3120-3720 Open Station Tractors, 4300-4400, 4310-4410)	In Base Price
2010	Mounting Frame and Hoses (4005, 990, 970, 1070 Tractors) *For 970, 990 (Serial No. - LV0990G590000) and 1070 Tractors, Refer to Parts Catalog for Additional Oil Lines Required.*	22.00
2020	Mounting Frame and Hoses (3203)	35.00
2030	Mounting Frame and Hoses (4105)	101.00
2095	Less Mounting Frame and Hoses	-433.00

HOOD GUARD

5000	Hood Guard (4300-4400, 4310-4410)	Same Price

300CX Loader
Continued

CODE	ATTACHMENT IDENTIFIER	DESCRIPTION	SUGGESTED LIST PRICE USD ($)
		HOOD GUARD Continued...	
5005		Hood Guard (3120-3720)	In Base Price
5010		Deluxe Hood Guard (3120-3720)	268.00
5030		Hood Guard (3203)	Same Price
5095		Less Hood Guard	-214.00
5015		Hood Guard (990, 970, 1070) *Required For Loader Installation on 970, 990, 1070 Tractors, Includes Front Weight Bracket.*	-65.00
5020		Hood Guard (4105) *Required for Loader Installation.*	Same Price
5025		Hood Guard (4005)	Same Price
		BALLAST	
		Three Point Hitch Ballast is Required For Loader Stability. See Operator's Manual For Ballast Recommendations. For Ballast Box Use with iMatch Quik Hitch, Code 9090 or BW15056 is Required.	
4000		Ballast Box	223.00
4010		Ballast Box with Extension	329.00
4095		Less Ballast Box	In Base Price
		BUCKET	
		Additional Bucket Options are Available as "9000" Codes.	
8000		61 In. (1550 mm) Materials Bucket	In Base Price
8095		Less Bucket	-699.00
		ATTACHMENTS - ORDER AS DESIRED	
		Miscellaneous:	
9200		Skid Steer Attachment Carrier *See Sales Manual for Compatible Attachments.*	552.00
9090		iMatch / Quik-Coupler Bushing Kit	82.00
9608		Australian Compliance Kit *Kit consists of:* *BW16253 - 300X Anti Spill Kit* *BW16260 - 300X Service Lock* *BW16244 - Australian Code of Practice*	715.00
9049		Third Function Hydraulic Lines and Hoses *If Used with Skid Steer Attachments, Couplers will not Match.* *The Following Parts are Required to Convert for this Application:* *(1) KV14216, (1) KV15976 and (2) AT191333.*	372.00
		Buckets:	

300CX Loader
Continued

CODE	ATTACHMENT IDENTIFIER	DESCRIPTION	SUGGESTED LIST PRICE USD ($)
		ATTACHMENTS - ORDER AS DESIRED Continued...	
9020		61 In. (1550mm) Loader Materials Bucket - Quik Change	749.00
9025		73 In. (1850mm) Loader Materials Bucket	859.00
9030		61 In. (1550 mm) Loader Heavy Duty Bucket with Holes for Cutting Edge	916.00
9035		73 In. (1850 mm) Loader Heavy Duty Bucket with Holes for Cutting Edge	1,026.00
9040		73 In. (1850 mm) Loader High Volume Bucket	1,231.00
9041		85 In. (2150 mm) Loader High Volume Bucket	1,517.00
		Cutting Edges:	
9080		61 In. (1550 mm) Replaceable Bucket Cutting Edge with Hardware	141.00
9082		73 In. (1850 mm) Replaceable Bucket Cutting Edge with Hardware	171.00
		Spanish North American Kit:	
9100		Spanish North American Operator's Manual and Decal Kit	No Charge
		Tooth Bars:	
9070		61 In. (1550 mm) Tooth Bar for Bucket	422.00
9072		73 In. (1850 mm) Tooth Bar for Bucket	490.00
		ATTACHMENTS FOR FIELD CONVERSION	
		BUCKETS:	
	AT332288	56 in. Dirt Bucket (12.3 cu. ft.) with Edge	888.00
	AT333697	60 in. Dirt Bucket (14.3 cu. ft.) with Edge	928.00
	KV24751	66 in. Construction Bucket (16.2 cu. ft.) with Edge	1,128.00
	KV22801	66 in. Utility Bucket (20.6 cu. ft.)	953.00
		Ballast Box:	
	BW15073	Ballast Box	269.50
	BW15074	Ballast Box Extension	128.70
		Buckets, Attachments & Accessories (Loaders):	
	LVB25341	72 In. Quik-Tatch Standard Front Loader Bucket *Requires Skid Steer Attachment Carrier.*	1,129.70
		Buckets:	
	BW14764	61 In. (1550 mm) Loader Heavy Duty Bucket with Holes for Cutting Edge	1,007.60
	BW14146	61 In. (1550mm) Loader Materials Bucket - Quik Change	823.90
	KV11636	66 in. Foundry Bucket (14.6 cu. ft.)	853.00
	BW14765	73 In. (1850 mm) Loader Heavy Duty Bucket with Holes for Cutting Edge	1,128.60
	BW14658	73 In. (1850 mm) Loader High Volume Bucket	1,354.10

300CX Loader
Continued

CODE	ATTACHMENT IDENTIFIER	DESCRIPTION	SUGGESTED LIST PRICE USD ($)
		ATTACHMENTS FOR FIELD CONVERSION Continued...	
	BW14147	73 In. (1850mm) Loader Materials Bucket	944.90
	BW15273	85 In. (2150 mm) Loader High Volume Bucket	1,668.70
		Cutting Edges:	
	T225190	56 in. Bolt-On Cutting Edge *NOTE: Requires additional hardware; see Parts.*	See Parts
	KV17819	60 in. Bolt-On Cutting Edge *NOTE: Requires additional hardware; see Parts.*	See Parts
	BW14762	61 In. (1550 mm) Replaceable Bucket Cutting Edge with Hardware	155.10
	U16748	66 in. Bolt-On Cutting Edge *NOTE: Requires additional hardware; see Parts.*	See Parts
	T32742	72 in. Bolt-On Cutting Edge *NOTE: Requires additional hardware; see Parts.*	See Parts
	BW14763	73 In. (1850 mm) Replaceable Bucket Cutting Edge with Hardware	188.10
		Hood Guards:	
	BWA1190	Deluxe Hood Guard (3120-3720)	568.70
	BW15222	Deluxe Hood Guard Attachment	316.80
	BW14378	Hood Guard *For 4300-4400, 4310-4410 Tractors.*	259.60
	BW15416	Hood Guard *For 970, 990 and 1070 Tractors. Required For Loader Installation on 970, 990, 1070 Tractors, Includes Front Weight Bracket.*	176.00
	BW15848	Hood Guard (3005, 4005)	246.40
	BW15219	Hood Guard (3120-3720)	251.90
	BW15534	Hood Guard (3203)	251.90
	BW16040	Hood Guard (4105)	251.90
		Miscellaneous:	
	BW16050	Anti -Drop Valve Kit - Bucket Circuit *For 300CX Loader*	352.00
	BW16049	Anti -Drop Valve Kit - Lift Circuit *For 300CX Loader*	352.00
	BW16253	Anti Spill Kit *For 300CX - Australia Only.*	589.60
	BW16244	Australian Code of Practice *For 300CS and 400CX - Australia Only.*	See Parts
	BW15389	Australian Code of Practice Kit *Kit Includes Australian Warning Labels.*	See Parts

300CX Loader
Continued

CODE	ATTACHMENT IDENTIFIER	DESCRIPTION	SUGGESTED LIST PRICE USD ($)
		ATTACHMENTS FOR FIELD CONVERSION Continued...	
	BW15223	Bucket Level Indicator	62.70
	BW15352	Hoses and Parts *For 4005, 990, 970, 1070 Tractors.*	265.10
	BW15599	Hoses and Parts *For 4105.*	336.60
	BW15762	Hoses and Parts *For 3120, 3320, 3520, 3720, 4300, 4400, 4310 and 4410 Open Station Tractors.* *For 3320, 3520 and 3720 Cab Tractors.*	294.80
	BW16260	Service Lock *For 300CX - Australia Only.*	196.90
	BW15244	Skid Steer Attachment Carrier *See Sales Manual for Compatible Attachments.*	607.20
	BW16138	Third Function Hydraulic Lines and Hoses *If Used with Skid Steer Attachments, Couplers will not Match.* *The Following Parts are Required to Convert for this Application:* *(1) KV14216, (1) KV15976 and (2) AT191333.*	409.20
	BW15056	iMatch / Quik-Coupler Bushing Kit	90.20
		Mounting Frames:	
	BW15347	Mounting Frame *For 4005, 970, 990, and 1070 Tractors.*	271.70
	BW15456	Mounting Frame (3320-3720, 4320-4720 Cab Tractors)	215.60
	BW15682	Mounting Frame (4105)	292.60
	BW15204	Mounting Frame (4200-4400, 4210-4400, 3120-3720, 3203 Open Station Tractors)	215.60
	BWA1191	Mounting Frame with Hoses (3203)	552.20
	BWA1201	Mounting Frame with Hoses (4005, 990, 970, 1070 Tractors) *Must Order Appropriate Hood Guard. For 970, 990 (Serial No. - LV0990G590000) and 1070 Tractors, Refer to Parts Catalog for Additional Oil Lines Required.*	536.80
	BWA1276	Mounting Frame with Hoses and Parts (3320-3720 Cab Tractors)	510.40
	BWA1452	Mounting Frame with Hoses and Parts (4105)	629.20
	BWA1200	Mounting Frame with Hoses and Parts (4300-4400, 4310-4410, 3120-3720 Open Station Tractors)	510.40
		Tooth Bars:	
	AT337951	56 in. Tooth Bar - 6 Teeth	426.00
	KV12292	60 in. Tooth Bar - 7 Teeth	433.00
	BW15227	61 In. (1550 mm) Tooth Bar for Bucket	464.20

300CX Loader
Continued

CODE	ATTACHMENT IDENTIFIER	DESCRIPTION	SUGGESTED LIST PRICE USD ($)
		ATTACHMENTS FOR FIELD CONVERSION Continued...	
	KV12294	66 in. Tooth Bar - 7 Teeth *Toothbars cannot be on a Bucket along with a HD Cutting Edge. Requires Installation Instruction KV15661. Compatible with Appropriate CWP Attachments Only.*	451.00
	KV11598	72 in. Tooth Bar - 7 Teeth *Toothbars cannot be on a Bucket along with a HD Cutting Edge. Requires Installation Instruction KV15661. Compatible with Appropriate CWP Attachments Only.*	489.00
	BW15228	73 In. (1850 mm) Tooth Bar for Bucket	539.00

400X Loader

Equipment for Base Machine

```
Quik-Park Loader Mounting System   Less Ballast Box
Quik Change Attachment Carrier
Mounting Frame
Hood Guard
Bucket Level Indicator
73 In.(1850 mm) Materials Bucket
```

CODE	ATTACHMENT IDENTIFIER	DESCRIPTION	SUGGESTED LIST PRICE USD ($)
		Select One Code From Each Required Category	
		BASE MACHINE	
		EX-WORKS Laredo, Texas: Martinez, Georgia; Waterloo, Iowa; Frisco, Texas; Grimsby, Ontario	
2541P		400X Loader *For 4120-4720, 4500-4700, 4510-4710 Tractors.*	5,345.00
		TRACTOR MOUNTING FRAME	
2000		Mounting Frame (4120-4720 Open Station Tractors, 4500-4700, 4510-4710, 4120-4720) Tractors.	In Base Price
2005		Mounting Frame (4320-4720 Cab Tractors)	Same Price
2095		Less Mounting Frame	-183.00
		HOOD GUARD	
5000		Hood Guard (4500-4700, 4510-4710)	Same Price
5005		Hood Guard (4120-4720)	In Base Price
5010		Deluxe Hood Guard (4120-4720)	269.00
5095		Less Hood Guard	-214.00
		BALLAST	
		Three Point Hitch Ballast is Required For Loader Stability. See Operator's Manual For Ballast Recommendations. For Ballast Box Use with iMatch Quik Hitch, Code 9090 or BW15056 is Required.	
4000		Ballast Box	223.00
4010		Ballast Box with Extension	329.00
4095		Less Ballast Box	In Base Price
		BUCKET	
		Additional Bucket Options are Available as "9000" Codes.	
8000		73 In. (1850 mm) Materials Bucket	In Base Price

400X Loader
Continued

CODE	ATTACHMENT IDENTIFIER	DESCRIPTION	SUGGESTED LIST PRICE USD ($)
		BUCKET Continued...	
8095		Less Bucket	-802.00
		ATTACHMENTS - ORDER AS DESIRED	
		Miscellaneous:	
9049		Third Function Hydraulic Lines and Hoses *If Used with Skid Steer Attachments, Couplers will not Match.* *The Following Parts are Required to Convert for this Application:* *(1) KV14216, (1) KV15976 and (2) AT191333.*	372.00
9090		iMatch / Quik-Coupler Bushing Kit	82.00
9095		Australian Code of Practice Kit *Kit Includes Australian Warning Labels.*	No Charge
9200		Skid Steer Attachment Carrier *See Sales Manual for Compatible Attachments.*	552.00
		Buckets:	
9020		61 In. (1550mm) Loader Materials Bucket - Quik Change	749.00
9025		73 In. (1850mm) Loader Materials Bucket	859.00
9030		61 In. (1550 mm) Loader Heavy Duty Bucket with Holes for Cutting Edge	916.00
9035		73 In. (1850 mm) Loader Heavy Duty Bucket with Holes for Cutting Edge	1,026.00
9040		73 In. (1850 mm) Loader High Volume Bucket	1,231.00
9041		85 In. (2150 mm) Loader High Volume Bucket	1,517.00
		Cutting Edges:	
9080		61 In. (1550 mm) Replaceable Bucket Cutting Edge with Hardware	141.00
9082		73 In. (1850 mm) Replaceable Bucket Cutting Edge with Hardware	171.00
		Spanish North American Kit:	
9100		Spanish North American Operator's Manual and Decal Kit	No Charge
		Tooth Bars:	
9070		61 In. (1550 mm) Tooth Bar for Bucket	422.00
9072		73 In. (1850 mm) Tooth Bar for Bucket	490.00
		ATTACHMENTS FOR FIELD CONVERSION	
		BUCKETS:	
	KV24751	66 in. Construction Bucket (16.2 cu. ft.) with Edge	1,128.00
	KV22801	66 in. Utility Bucket (20.6 cu. ft.)	953.00
		Ballast Box:	
	BW15073	Ballast Box	269.50
	BW15074	Ballast Box Extension	128.70
		Buckets, Attachments & Accessories (Loaders):	

400X Loader
Continued

CODE	ATTACHMENT IDENTIFIER	DESCRIPTION	SUGGESTED LIST PRICE USD ($)
		ATTACHMENTS FOR FIELD CONVERSION Continued...	
	LVB25343	72 In. Quik-Tatch Heavy Duty 4-in-1 Front Loader Bucket	3,549.70
	LVB25342	72 In. Quik-Tatch Heavy Duty Front Loader Bucket w/Replaceable Cutting Edge	1,359.60
	LVB25341	72 In. Quik-Tatch Standard Front Loader Bucket	1,129.70
	LVB25345	84 In. Light Material Bucket	1,392.60
		Buckets:	
	BW14764	61 In. (1550 mm) Loader Heavy Duty Bucket with Holes for Cutting Edge	1,007.60
	BW14146	61 In. (1550mm) Loader Materials Bucket - Quik Change	823.90
	KV11636	66 in. Foundry Bucket (14.6 cu. ft.)	853.00
	BW14765	73 In. (1850 mm) Loader Heavy Duty Bucket with Holes for Cutting Edge	1,128.60
	BW14658	73 In. (1850 mm) Loader High Volume Bucket	1,354.10
	BW14147	73 In. (1850mm) Loader Materials Bucket	944.90
	BW15273	85 In. (2150 mm) Loader High Volume Bucket	1,668.70
		Cutting Edges:	
	BW14762	61 In. (1550 mm) Replaceable Bucket Cutting Edge with Hardware	155.10
	U16748	66 in. Bolt-On Cutting Edge *NOTE: Requires additional hardware; see Parts.*	See Parts
	T32742	72 in. Bolt-On Cutting Edge *NOTE: Requires additional hardware; see Parts.*	See Parts
	BW14763	73 In. (1850 mm) Replaceable Bucket Cutting Edge with Hardware	188.10
		European CE Kit:	
	AW34781	European CE (France) Anti-Drop Valve Kit	See Parts
		Hood Guards:	
	BWA1184	Deluxe Hood Guard (4120-4720 Tractors)	568.70
	BW15222	Deluxe Hood Guard Attachment	316.80
	BW14378	Hood Guard	259.60
	BW15221	Hood Guard (4120-4720)	251.90
		Miscellaneous:	
	BW15389	Australian Code of Practice Kit *Kit Includes Australian Warning Labels.*	See Parts
	BW15223	Bucket Level Indicator	62.70
	BW15760	Hoses and Parts	234.30

400X Loader
Continued

CODE	ATTACHMENT IDENTIFIER	DESCRIPTION	SUGGESTED LIST PRICE USD ($)
		ATTACHMENTS FOR FIELD CONVERSION Continued...	
	BW15244	Skid Steer Attachment Carrier *See Sales Manual for Compatible Attachments.*	607.20
	BW16139	Third Function Hydraulic Lines and Hoses *If Used with Skid Steer Attachments, Couplers will not Match.* *The Following Parts are Required to Convert for this Application:* *(1) KV14216, (1) KV15976 and (2) AT191333.*	409.20
	BW15056	iMatch / Quik-Coupler Bushing Kit	90.20
		Mounting Frames:	
	BW15456	Mounting Frame (3320-3720, 4320-4720 Cab Tractors)	215.60
	BW15205	Mounting Frame (4500-4700, 4510-4710, 4120-4720 Open Station Tractors)	215.60
		Tooth Bars:	
	BW15227	61 In. (1550 mm) Tooth Bar for Bucket	464.20
	KV12294	66 in. Tooth Bar - 7 Teeth	451.00
	KV11598	72 in. Tooth Bar - 7 Teeth	489.00
	BW15228	73 In. (1850 mm) Tooth Bar for Bucket	539.00

400CX Loader

Equipment for Base Machine

```
Quik-Park Loader Mounting System   73 In.(1850 mm) Materials Bucket
Quik Change Attachment Carrier     Less Ballast Box
Mechanical Self-Leveling
Mounting Frame
Hood Guard
Bucket Level Indicator
```

CODE	ATTACHMENT IDENTIFIER	DESCRIPTION	SUGGESTED LIST PRICE USD ($)
		Select One Code From Each Required Category	
		BASE MACHINE	
		EX-WORKS Laredo, Texas: Martinez, Georgia; Waterloo, Iowa; Frisco, Texas; Grimsby, Ontario	
2552P		400CX Loader *For 4120-4720, 4500-4700, 4510-4710 Tractors.*	5,948.00
		DESTINATION	
		Operator's Manual	
0202		United States *Operator's Manual.*	In Base Price
0184		Canada *English Operator's Manual and French Operator's Manual, Decal Kit.*	Same Price
0230		Australia *Operator's Manual.*	Same Price
0237		New Zealand *Operator's Manual.*	Same Price
		TRACTOR MOUNTING FRAME	
2000		Mounting Frame (4500-4700, 4510-4710, 4120-4720)	In Base Price
2095		Less Mounting Frame	-183.00
2005		Mounting Frame (4320-4720 Cab Tractors)	Same Price
		HOOD GUARD	
5000		Hood Guard (4500-4700, 4510-4710)	Same Price
5005		Hood Guard (4120-4720)	In Base Price
5010		Deluxe Hood Guard (4120-4720)	269.00
5095		Less Hood Guard	-214.00
		BALLAST	

400CX Loader
Continued

CODE	ATTACHMENT IDENTIFIER	DESCRIPTION	SUGGESTED LIST PRICE USD ($)
		BALLAST Continued...	
		Three Point Hitch Ballast is Required For Loader Stability. See Operator's Manual For Ballast Recommendations. For Ballast Box Use with iMatch Quik Hitch, Code 9090 or BW15056 is Required.	
4000		Ballast Box	223.00
4010		Ballast Box with Extension	329.00
4095		Less Ballast Box	In Base Price
		BUCKET	
		Additional Bucket Options are Available as "9000" Codes.	
8000		73 In. (1850 mm) Materials Bucket	In Base Price
8095		Less Bucket	-802.00
		ATTACHMENTS - ORDER AS DESIRED	
		Miscellaneous:	
9200		Skid Steer Attachment Carrier *See Sales Manual for Compatible Attachments.*	552.00
9090		iMatch / Quik-Coupler Bushing Kit	82.00
9608		Australian Compliance Kit *Kit consists of:* *BW16210 - 400CX Service Lock* *BW16244 - Australia Code of Practice*	195.00
9049		Third Function Hydraulic Lines and Hoses *If Used with Skid Steer Attachments, Couplers will not Match.* *The Following Parts are Required to Convert for this Application:* *(1) KV14216, (1) KV15976 and (2) AT191333.*	372.00
		Buckets:	
9020		61 In. (1550mm) Loader Materials Bucket - Quik Change	749.00
9025		73 In. (1850mm) Loader Materials Bucket	859.00
9030		61 In. (1550 mm) Loader Heavy Duty Bucket with Holes for Cutting Edge	916.00
9035		73 In. (1850 mm) Loader Heavy Duty Bucket with Holes for Cutting Edge	1,026.00
9040		73 In. (1850 mm) Loader High Volume Bucket	1,231.00
9041		85 In. (2150 mm) Loader High Volume Bucket	1,517.00
		Cutting Edges:	
9080		61 In. (1550 mm) Replaceable Bucket Cutting Edge with Hardware	141.00
9082		73 In. (1850 mm) Replaceable Bucket Cutting Edge with Hardware	171.00
		Spanish North American Kit:	
9100		Spanish North American Operator's Manual and Decal Kit	No Charge

400CX Loader
Continued

CODE	ATTACHMENT IDENTIFIER	DESCRIPTION	SUGGESTED LIST PRICE USD ($)
		ATTACHMENTS - ORDER AS DESIRED Continued...	
		Tooth Bars:	
9070		61 In. (1550 mm) Tooth Bar for Bucket	422.00
9072		73 In. (1850 mm) Tooth Bar for Bucket	490.00
		ATTACHMENTS FOR FIELD CONVERSION	
		BUCKETS:	
	KV24751	66 in. Construction Bucket (16.2 cu. ft.) with Edge	1,128.00
	KV22801	66 in. Utility Bucket (20.6 cu. ft.)	953.00
		Ballast Box:	
	BW15073	Ballast Box	269.50
	BW15074	Ballast Box Extension	128.70
		Buckets, Attachments & Accessories (Loaders):	
	LVB25343	72 In. Quik-Tatch Heavy Duty 4-in-1 Front Loader Bucket *Requires Skid Steer Attachment Carrier and Third Function Hydraulic Line and Hose Kit. CWP Powered Buckets come with Flat Face Couplers and Turf Loaders do not. A Coupler Change out on the 3rd SCV Line Kit will be Required to Properly Interface with the CWP Hydraulic Attachments. See Sales Manual.*	3,549.70
	LVB25342	72 In. Quik-Tatch Heavy Duty Front Loader Bucket w/Replaceable Cutting Edge *Requires Skid Steer Attachment Carrier.*	1,359.60
	LVB25341	72 In. Quik-Tatch Standard Front Loader Bucket *Requires Skid Steer Attachment Carrier.*	1,129.70
	LVB25345	84 In. Light Material Bucket *Requires Skid Steer Attachment Carrier.*	1,392.60
		Buckets:	
	BW14764	61 In. (1550 mm) Loader Heavy Duty Bucket with Holes for Cutting Edge	1,007.60
	BW14146	61 In. (1550mm) Loader Materials Bucket - Quik Change	823.90
	KV11636	66 in. Foundry Bucket (14.6 cu. ft.)	853.00
	BW14765	73 In. (1850 mm) Loader Heavy Duty Bucket with Holes for Cutting Edge	1,128.60
	BW14658	73 In. (1850 mm) Loader High Volume Bucket	1,354.10
	BW14147	73 In. (1850mm) Loader Materials Bucket	944.90
	BW15273	85 In. (2150 mm) Loader High Volume Bucket	1,668.70
		Cutting Edges:	
	BW14762	61 In. (1550 mm) Replaceable Bucket Cutting Edge with Hardware	155.10
	U16748	66 in. Bolt-On Cutting Edge *NOTE: Requires additional hardware; see Parts.*	See Parts

400CX Loader
Continued

CODE	ATTACHMENT IDENTIFIER	DESCRIPTION	SUGGESTED LIST PRICE USD ($)
		ATTACHMENTS FOR FIELD CONVERSION Continued...	
	T32742	72 in. Bolt-On Cutting Edge *NOTE: Requires additional hardware; see Parts.*	See Parts
	BW14763	73 In. (1850 mm) Replaceable Bucket Cutting Edge with Hardware	188.10
		European CE Kit:	
	AW34781	European CE (France) Anti-Drop Valve Kit	See Parts
		Hood Guards:	
	BWA1184	Deluxe Hood Guard (4120-4720 Tractors)	568.70
	BW15222	Deluxe Hood Guard Attachment	316.80
	BW14378	Hood Guard *For 4500-4700, 4510-4710 Tractors.*	259.60
	BW15221	Hood Guard (4120-4720)	251.90
		Miscellaneous:	
	BW16244	Australian Code of Practice *For 300CS and 400CX - Australia Only.*	See Parts
	BW15389	Australian Code of Practice Kit *Kit Includes Australian Warning Labels.*	See Parts
	BW15446	Bucket Level Indicator	62.70
	AW34729	Coupler Conversion Kit	See Parts
	BW15760	Hoses and Parts	234.30
	BW16210	Service Lock *For 400CX - Australia Only.*	214.50
	BW15244	Skid Steer Attachment Carrier *See Sales Manual for Compatible Attachments.*	607.20
	BW16139	Third Function Hydraulic Lines and Hoses *If Used with Skid Steer Attachments, Couplers will not Match.* *The Following Parts are Required to Convert for this Application:* *(1) KV14216, (1) KV15976 and (2) AT191333.*	409.20
	BW15056	iMatch / Quik-Coupler Bushing Kit	90.20
		Mounting Frames:	
	BW15456	Mounting Frame (3320-3720, 4320-4720 Cab Tractors)	215.60
	BW15205	Mounting Frame (4500-4700, 4510-4710, 4120-4720 Open Station Tractors)	215.60
		Tooth Bars:	
	BW15227	61 In. (1550 mm) Tooth Bar for Bucket	464.20
	KV12294	66 in. Tooth Bar - 7 Teeth *Toothbars cannot be on a Bucket along with a HD Cutting Edge. Requires Installation Instruction KV15661. Compatible with Appropriate CWP Attachments Only.*	451.00

400CX Loader
Continued

CODE	ATTACHMENT IDENTIFIER	DESCRIPTION	SUGGESTED LIST PRICE USD ($)
		ATTACHMENTS FOR FIELD CONVERSION Continued...	
	KV11598	72 in. Tooth Bar - 7 Teeth *Toothbars cannot be on a Bucket along with a HD Cutting Edge. Requires Installation Instruction KV15661. Compatible with Appropriate CWP Attachments Only.*	489.00
	BW15228	73 In. (1850 mm) Tooth Bar for Bucket	539.00

D120 NSL Loader

Equipment for Base Machine

49 In.(1250 mm) Pin-On Materials Bucket
Basic Loader Mounting System
Mounting Frame for 1023E, 1025R and non-current 1026R Series Tractors

Hood Guard

CODE	ATTACHMENT IDENTIFIER	DESCRIPTION	SUGGESTED LIST PRICE USD ($)
		Select One Code From Each Required Category	
		BASE MACHINE	
		EX-WORKS Laredo, Texas; Marinez, Georgia; Waterloo, Iowa; Frisco, Texas; Grimsby, Ontario	
1751P		D120 NSL Loader *For 1023E, 1025R and noncurrent 1026R Tractors.*	2,561.00
		DESTINATION	
0202		Operator's Manual - UNITED STATES OF AMERICA	In Base Price
0184		Operator's Manual - CANADA *French OM and Decal Kit BW15952 Print-On-Demand through JD Bookstore.*	Same Price
		BALLAST	
		Three Point Hitch Ballast is Required For Loader Stability. See Operator's Manual For Ballast Recommendations. For Ballast Box Use with iMatch Quik Hitch, Code 9600 or BW15056 is Required.	
6000		Ballast Box	223.00
6010		Ballast Box with Extension	329.00
6995		Less Ballast Box	In Base Price
		ATTACHMENTS - ORDER AS DESIRED	
		Miscellaneous:	
9600		iMatch Quik-Coupler Bushing Kit	82.00
		ATTACHMENTS FOR FIELD CONVERSION	
		Attachment Carrier:	
	BW15939	John Deere CUT Carrier *Compatible with Quick-Change Buckets*	289.30
		Ballast Box:	
	BW15073	Ballast Box	269.50
	BW15074	Ballast Box Extension	128.70

D120 NSL Loader

Continued

CODE	ATTACHMENT IDENTIFIER	DESCRIPTION	SUGGESTED LIST PRICE USD ($)
		ATTACHMENTS FOR FIELD CONVERSION Continued...	
		Buckets:	
	BW14144	49 In. (1250mm) Loader Materials Bucket - Quik Change	723.80
	BW15896	49 in. (1250mm) Materials Bucket - Pin ON	671.00
	BW14145	53 In. (1350mm) Loader Materials Bucket - Quik Change	785.40
	BW14146	61 In. (1550mm) Loader Materials Bucket - Quik Change	823.90
		Hood Guards:	
	BW15901	Deluxe Hood Guard (1023E, 1025R & 1026R Tractors)	226.60
	BW15900	Hood Guard - (1023E, 1025R & 1026R Tractors)	203.57
		Miscellaneous:	
	BW16242	Anti Spill Kit *Australia Only - for H120.*	283.80
	BW16244	Australian Code of Practice *Australia Only.*	See Parts
	BW15476	Bucket Level Indicator	60.50
	BW16274	H120 Service Lock *Australia Only - for H120.*	187.00
		Mounting Frames:	
	BW15898	Mounting Frame *For 1023E and 1026R Tractors.*	410.30

H120 NSL Loader

Equipment for Base Machine

49 In.(1250 mm) Quick Change Materials Bucket
Quick Change Attachment Carrier
Quik-Park Loader Mounting System
Mounting Frame for 1023E, 1025R and non-current 1026R Series Tractors
Deluxe Hood Guard
Mechanical Bucket Level Indicator
Oil Line Cover

CODE	ATTACHMENT IDENTIFIER	DESCRIPTION	SUGGESTED LIST PRICE USD ($)
		Select One Code From Each Required Category	
		BASE MACHINE	
		EX-WORKS Laredo, Texas; Marinez, Georgia; Waterloo, Iowa; Frisco, Texas; Grimsby, Ontario	
1761P		H120 NSL Loader *For 1023E, 1025R and noncurrent 1026R Tractors.*	3,269.00
		DESTINATION	
0202		Operator's Manual - UNITED STATES OF AMERICA	In Base Price
0184		Operator's Manual - CANADA *French OM and Decal Kit BW15952 Print-On-Demand through JD Bookstore.*	Same Price
0230		Operator's Manual & Decals - AUSTRALIA *Australian Code of Practice and Decals.* *Requires Code 9608 - Australian Compliance Kit.*	Same Price
0237		Operator's Manual & Decals - NEW ZEALAND	Same Price
0081		Operator's Manual & Decals - KAZAKHASTAN (KAZAKH, RUSSIAN)	Same Price
0123		Operator's Manual & Decals - AUSTRIA	Same Price
0126		Operator's Manual & Decals - BELIGUM (FRENCH EXPORT, GERMAN, DUTCH)	Same Price
0130		Operator's Manual & Decals - CROATIA	Same Price
0131		Operator's Manual & Decals - CYPRUS	Same Price
0132		Operator's Manual & Decals - CZECH REPUBLIC	Same Price
0133		Operator's Manual & Decals - DENMARK	Same Price
0134		Operator's Manual & Decals - ESTONIA	Same Price
0135		Operator's Manual & Decals - FINLAND	Same Price
0136		Operator's Manual & Decals - FRANCE *French (Region 2) Operator's Manual and Decals.*	Same Price
0138		Operator's Manual & Decals - GERMANY	Same Price

H120 NSL Loader
Continued

CODE	ATTACHMENT IDENTIFIER	DESCRIPTION	SUGGESTED LIST PRICE USD ($)
		DESTINATION Continued...	
0139		Operator's Manual & Decals - GREECE	Same Price
0140		Operator's Manual & Decals - HUNGARY	Same Price
0142		Operator's Manual & Decals - IRELAND	Same Price
0143		Operator's Manual & Decals - ITALY	Same Price
0147		Operator's Manual & Decals - LITHUANIA	Same Price
0148		Operator's Manual & Decals - LUXEMOURG (FRENCH EXPORT, GERMAN)	Same Price
0154		Operator's Manual & Decals - NETHERLANDS	Same Price
0155		Operator's Manual & Decals - NORWAY	Same Price
0156		Operator's Manual & Decals - POLAND	Same Price
0157		Operator's Manual & Decals - PORTUGAL	Same Price
0158		Operator's Manual & Decals - ROMANIA	Same Price
0160		Operator's Manual & Decals - SERBIA	Same Price
0161		Operator's Manual & Decals - SLOVAKIA	Same Price
0162		Operator's Manual & Decals - SLOVENIA	Same Price
0163		Operator's Manual - SPAIN *Spanish (Region 2) Operator's Manual and Decals.*	Same Price
0164		Operator's Manual & Decals - SWEDEN	Same Price
0165		Operator's Manual & Decals - SWITZERLAND (FRENCH EXPORT, GERMAN, ITALIAN)	Same Price
0166		Operator's Manual & Decals - UKRAINE	Same Price
0167		Operator's Manual & Decals - UNITED KINGDOM *English (Region 2) Operator's Manual and Decals.*	Same Price
		BALLAST	
		Three Point Hitch Ballast is Required For Loader Stability. See Operator's Manual For Ballast Recommendations. For Ballast Box Use with iMatch Quik Hitch, Code 9600 or BW15056 is Required.	
6000		Ballast Box	223.00
6010		Ballast Box with Extension	329.00
6995		Less Ballast Box	In Base Price
		ATTACHMENT CARRIER	

H120 NSL Loader
Continued

CODE	ATTACHMENT IDENTIFIER	DESCRIPTION	SUGGESTED LIST PRICE USD ($)
		ATTACHMENT CARRIER Continued...	
7020		John Deere CUT Carrier	In Base Price
7095		Less Carrier	-245.00
		BUCKETS	
8110		49 In. (1250 mm) Quick Change Materials Bucket	In Base Price
8111		49 In. (1250 mm) Pin-On Materials Bucket	-45.00
8115		53 In. (1350 mm) Quick Change Materials Buckets	52.00
8995		Less Bucket	-614.00
		ATTACHMENTS - ORDER AS DESIRED	
		Miscellaneous:	
9600		iMatch Quik-Coupler Bushing Kit	82.00
9112		Spanish (Region 3) Operator's Manual and Decal Kit	No Charge
9605		Bucket Level Indicator - Cab Only	162.00
9606		Hoses and Clamp *To Update H120 Loaders for Cab Tractors.*	65.00
9608		Australian Compliance Kit *Required when ordering Destination Code 0230.* *Kit consists of:* *BW16242 - Anti Spill Kit* *BW16244 - Australian Code of Practice* *BW16274 - H120 Service Lock*	415.00
		ATTACHMENTS FOR FIELD CONVERSION	
		Attachment Carrier:	
	BW15939	John Deere CUT Carrier *Compatible with Quick-Change Buckets*	289.30
		Ballast Box:	
	BW15073	Ballast Box	269.50
	BW15074	Ballast Box Extension	128.70
		Buckets:	
	BW14144	49 In. (1250mm) Loader Materials Bucket - Quik Change	723.80
	BW15896	49 in. (1250mm) Materials Bucket - Pin ON	671.00
	BW14145	53 In. (1350mm) Loader Materials Bucket - Quik Change	785.40
	BW14146	61 In. (1550mm) Loader Materials Bucket - Quik Change	823.90
		Hood Guards:	
	BW15901	Deluxe Hood Guard (1023E, 1025R & 1026R Tractors)	226.60

H120 NSL Loader

Continued

CODE	ATTACHMENT IDENTIFIER	DESCRIPTION	SUGGESTED LIST PRICE USD ($)
		ATTACHMENTS FOR FIELD CONVERSION Continued...	
	BW15900	Hood Guard - (1023E, 1025R & 1026R Tractors)	203.57
		Miscellaneous:	
	BW15476	Bucket Level Indicator	60.50
	BW16145	Bucket Level Indicator - Cab Only	178.20
	BW16182	Hoses and Clamp *To Update H120 Loaders for Cab Tractors.*	71.50
		Mounting Frames:	
	BW15898	Mounting Frame *For 1023E and 1026R Tractors.*	410.30

H130 NSL Loader

Equipment for Base Machine

Quik-Park Loader Mounting System
Mounting Frame for 2025R and noncurrent 2320 Tractors
Hood Guard for 2025R and noncurrent 2210, 2305, 2320
Quik-Tach Attachment Carrier
49 In.(1250 mm) Quik Tach Materials Bucket (6.0 ft^3)
Mechanical Bucket Level Indicator
Oil Line Cover

CODE	ATTACHMENT IDENTIFIER	DESCRIPTION	SUGGESTED LIST PRICE USD ($)

Select One Code From Each Required Category

BASE MACHINE

EX-WORKS Laredo, Texas; Marinez, Georgia; Waterloo, Iowa; Frisco, Texas; Grimsby, Ontario

2371P	H130 NSL Loader *For 2025R and 2032R and noncurrent 2305, 2320, 2520 and 2720 Tractors.*	3,375.00

DESTINATION

0202	Operator's Manual - UNITED STATES OF AMERICA	In Base Price
0184	Operator's Manual - CANADA *French OM and Decal Kit BW15952 Print-On-Demand through JD Bookstore.*	Same Price
0230	Operator's Manual & Decals - AUSTRALIA *Australian Code of Practice and Decals.* *Requires Code 9608 - Australian Compliance Kit.*	Same Price
0237	Operator's Manual & Decals - NEW ZEALAND	Same Price
0133	Operator's Manual & Decals - DENMARK	Same Price
0072	Operator's Manual & Decals - CHINA	Same Price
0079	Operator's Manual & Decals - JAPAN	Same Price
0105	Operator's Manual & Decals - TURKEY	Same Price
0123	Operator's Manual & Decals - AUSTRIA	Same Price
0126	Operator's Manual & Decals - BELIGUM (FRENCH EXPORT, GERMAN, DUTCH)	Same Price
0131	Operator's Manual & Decals - CYPRUS	Same Price
0132	Operator's Manual & Decals - CZECH REPUBLIC	Same Price
0135	Operator's Manual & Decals - FINLAND	Same Price
0136	Operator's Manual & Decals - FRANCE *French (Region 2) Operator's Manual and Decals.*	Same Price
0138	Operator's Manual & Decals - GERMANY	Same Price

H130 NSL Loader
Continued

CODE	ATTACHMENT IDENTIFIER	DESCRIPTION	SUGGESTED LIST PRICE USD ($)
		DESTINATION Continued...	
0139		Operator's Manual & Decals - GREECE	Same Price
0140		Operator's Manual & Decals - HUNGARY	Same Price
0142		Operator's Manual & Decals - IRELAND	Same Price
0143		Operator's Manual & Decals - ITALY	Same Price
0147		Operator's Manual & Decals - LITHUANIA	Same Price
0148		Operator's Manual & Decals - LUXEMOURG (FRENCH EXPORT, GERMAN)	Same Price
0154		Operator's Manual & Decals - NETHERLANDS	Same Price
0155		Operator's Manual & Decals - NORWAY	Same Price
0156		Operator's Manual & Decals - POLAND	Same Price
0157		Operator's Manual & Decals - PORTUGAL	Same Price
0158		Operator's Manual & Decals - ROMANIA	Same Price
0161		Operator's Manual & Decals - SLOVAKIA	Same Price
0163		Operator's Manual - SPAIN *Spanish (Region 2) Operator's Manual and Decals.*	Same Price
0164		Operator's Manual & Decals - SWEDEN	Same Price
0165		Operator's Manual & Decals - SWITZERLAND (FRENCH EXPORT, GERMAN, ITALIAN)	Same Price
0166		Operator's Manual & Decals - UKRAINE	Same Price
0167		Operator's Manual & Decals - UNITED KINGDOM *English (Region 2) Operator's Manual and Decals.*	Same Price
		TRACTOR MOUNTING FRAME	
1200		Mounting Frame *For 2305*	Same Price
1201		Mounting Frame *For 2025R and noncurrent 2320*	In Base Price
1202		Mounting Frame (noncurrent 2520) *For noncurrent 2520*	Same Price
1203		Mounting Frame *For 2032R and noncurrent 2720*	Same Price
1995		Less Mounting Frame	-348.00
		HOOD GUARD	

H130 NSL Loader
Continued

CODE	ATTACHMENT IDENTIFIER	DESCRIPTION	SUGGESTED LIST PRICE USD ($)
		HOOD GUARD Continued...	
5200		Hood Guard *For 2025R and noncurrent 2210, 2305, 2320*	In Base Price
5201		Hood Guard *For 2032R and noncurrent 2520 and 2720*	Same Price
5995		Less Hood Guard	-205.00
		BALLAST	
		Three Point Hitch Ballast is Required For Loader Stability. See Operator's Manual For Ballast Recommendations. For Ballast Box Use with iMatch Quik Hitch, Code 9090 or BW15056 is Required.	
6000		Ballast Box	223.00
6010		Ballast Box with Extension	329.00
6995		Less Ballast Box	In Base Price
		ATTACHMENT CARRIER	
7020		John Deere CUT Carrier *Order with Bucket Codes 8110, 8115, 8120*	In Base Price
7095		Less Carrier	-245.00
		BUCKETS	
8110		49 In. (1250 mm) Quick Change Materials Bucket	In Base Price
8111		49 In. (1250 mm) Pin-On Materials Bucket	-45.00
8115		53 In. (1350 mm) Quick Change Materials Buckets	52.00
8120		61 In. (1550 mm) Materials Bucket	85.00
8995		Less Bucket	-614.00
		ATTACHMENTS - ORDER AS DESIRED	
		Miscellaneous:	
9600		iMatch Quik-Coupler Bushing Kit	82.00
9112		Spanish (Region 3) Operator's Manual and Decal Kit	No Charge
9605		Bucket Level Indicator - Cab Only	162.00
9606		Hoses and Clamp	65.00
9608		Australian Compliance Kit *Required when ordering Destination Code 0230.* *Kit consists of:* *BW16198 - Anti Spill Kit* *BW16244 - Australian Code of Practice* *BW16278 - H130 Service Lock* *W56435 - Operators Manual (Australia)*	679.00

H130 NSL Loader
Continued

CODE	ATTACHMENT IDENTIFIER	DESCRIPTION	SUGGESTED LIST PRICE USD ($)
		ATTACHMENTS - ORDER AS DESIRED Continued...	
9104		Spanish N.A. Operator's Manual and Decal Kit	No Charge
		ATTACHMENTS FOR FIELD CONVERSION	
		Attachment Carrier:	
	BW15939	John Deere CUT Carrier	289.30
		Ballast Box:	
	BW15073	Ballast Box	269.50
	BW15074	Ballast Box Extension	128.70
		Buckets:	
	BW14144	49 In. (1250mm) Loader Materials Bucket - Quik Change	723.80
	BW15896	49 in. (1250mm) Materials Bucket - Pin ON	671.00
	BW14145	53 In. (1350mm) Loader Materials Bucket - Quik Change	785.40
	BW14146	61 In. (1550mm) Loader Materials Bucket - Quik Change	823.90
		Hood Guards:	
	BW15217	Hood Guard (2025R, 2210, 2305, 2320) *For 2025R and noncurrent 2210, 2305, 2320 Tractors*	242.00
	BW15634	Hood Guard (2032R, 2520, 2720) *For 2032R and noncurrent 2520, 2720 Tractors*	292.60
		Miscellaneous:	
	BW16198	Anti Spill Kit *Australia Only - for H120, H130*	559.90
	BW16244	Australian Code of Practice *Australia Only.*	See Parts
	BW15476	Bucket Level Indicator	60.50
	BW16145	Bucket Level Indicator - Cab Only	178.20
	BW16182	Hoses and Clamp	71.50
	BW16278	Service Lock *Australia Only - for H130.*	187.00
	BW15980	Spanish N.A. Operator's Manual and Decal Kit	See Parts
		Mounting Frames:	
	BW15324	Mounting Frame *For 2025R and noncurrent 2320 Tractors*	410.30
	BW15426	Mounting Frame *For noncurrent 2305 Tractors*	410.30
	BW15731	Mounting Frame *For noncurrent 2520 Tractors*	410.30

H130 NSL Loader
Continued

CODE	ATTACHMENT IDENTIFIER	DESCRIPTION	SUGGESTED LIST PRICE USD ($)
		ATTACHMENTS FOR FIELD CONVERSION Continued...	
	BW15730	Mounting Frame *For 2032R and noncurrent 2720 Tractors*	410.30

3-Bag Power Flow System (For 1023E, 1025R, 1026R, 2305, 2025R, 2032R, 2320, 2520, 2720, 2210 and 4115)

Equipment for Base Machine

```
14 Bushel Capacity                Less Power Flow
Polyethylene Hopper Top
3 Polyester Bags
Attaching Parts
Chute
```

CODE	ATTACHMENT IDENTIFIER	DESCRIPTION	SUGGESTED LIST PRICE USD ($)
		Select One Code From Each Required Category	
		BASE MACHINE	
		F.O.B. Davenport, Iowa	
140BGX		3-Bag Power Flow System (For 1023E, 1025R, 1026R, 2305, 2025R, 2032R, 2320, 2520, 2720, 2210 and 4115) *Tractors Require a High Performance Power Flow Kit for the Appropriate Mower Deck Which Must be Ordered Seperately. Tractors Using OnRamp Mower Decks also Require Approporiate OnRamp Belt Cover Kit. Not Compatible with 72-Inch Decks. 1 Series tractors also require a hitch plate that must be ordered seprately. (5) R66949 Quik-Tatch Weights are Recommended for Proper Ballast.*	1,449.00
		ATTACHMENTS FOR FIELD CONVERSION	
		Material Collection System Power Flow Blowers:	
	BM22697	54C/54X/54D High-Performance Blower Assembly (X300/X500 M-T/X700, 1023E, 1025R, 1026R, 2305, 2025R, 2320, 2210 and 4115)	541.41
	BM24514	60HC Power Flow (For use with X700 HC and 7-Iron Decks and 1023E, 1025R and 1026R Decks) *Not compatible with Cabs.*	719.04
	BM21496	62 In. High Performance Power Flow (For Use with 62C or 62D Mower Decks X700, 2305, 2025R, 2032R, 2320, 2520, 2720, 2210 and 4115)	541.41
		Miscellaneous:	
	LVB24947	54D OnRamp Belt Cover Kit (2025R, 2032R, 2320, 2520, 2720) *Required for Use with 54D OnRamp Mower Deck.*	56.71
	LVB24948	62D OnRamp Belt Cover Kit (2025R, 2032R, 2320, 2520, 2720) *Required for Use with 62D OnRamp Mower Deck.*	79.19
	BLV10028	Hitch Plate for 3 Bag MCS on 54D and 60D (1023E, 1025R, 1026R) *Required for Use with 54D and 60D mower decks.*	53.50
	LVB24957	Small Chasis MCS Chute (1023E, 1025R, 1026R, 2305, 2025R, 2032R, 2320, 2520, 2720, 2210 and 4115)	263.21
		Weights:	
	R66949	Quik-Tatch Weight, 42 Lb. *When Installed on 1023E, 1025R, 1026R, 2305, 2025R, 2032R, 2320, 2520, 2720, 2210, or 4115 Tractors, (1) M128726 Rod and (4) A15147 Spring Clips are Required.*	62.06

3-Bag Power Flow System (For 1023E, 1025R, 1026R, 2305, 2025R, 2032R, 2320, 2520, 2720, 2210 and 4115)

Continued

48 In. Shaft Driven Convertible Mower Deck (48C/48X)

Equipment for Base Machine

48 In. Shaft Driven convertible Mower Deck (48C/48X)
48 In. cutting width
Side discharge
Mulching capable
Material collection capable
Heavy duty 4 point mounting system
(4) Heavy duty rotateable gage wheels
40mm blade overlap
Formed heavy duty 10 Gauge steel
Formed edge around deck shell
Front anti-scalp roller
Shaft drive
Wash port
Greaseable deck spindles

CODE	ATTACHMENT IDENTIFIER	DESCRIPTION	SUGGESTED LIST PRICE USD ($)

Select One Code From Each Required Category

BASE MACHINE

F.O.B. Janesville, Wisconsin

9070M		48 In. Shaft Driven Convertible Mower Deck (48C/48X) *When mounting on Signature Series Tractors (X710, 730, X734, X738, X739, X750, X754, X758), also order BM24370 Draft Arms and Upstop Kit.*	1,300.00

DESTINATION

0202		United States and Canada	In Base Price
0230		Australia and New Zealand	Same Price
0195		Mexico	Same Price
0250		All Other Countries	Same Price

ATTACHMENTS FOR FIELD CONVERSION

Mower Deck and Mower Deck Attachments:

	BM24370	48C Draft arm kit, X700 Signature Series	63.13
	AM130907	Mower Deck Leveling Gauge	See Parts

54 In. Shaft Driven Convertible Mower Deck (54C/54X)

Equipment for Base Machine

54 In. Shaft Driven convertible Mower Deck (54C/54X)
54 In. cutting width
Side discharge
Mulching capable
Material collection capable
Heavy duty 4 point mounting system
(4) Heavy duty rotateable gage wheels
40mm blade overlap
Formed heavy duty 3.4 mm steel
Formed edge around deck shell
Front anti-scalp roller
Shaft drive
Wash port
Greaseable deck spindles

CODE	ATTACHMENT IDENTIFIER	DESCRIPTION	SUGGESTED LIST PRICE USD ($)
		Select One Code From Each Required Category	
		BASE MACHINE	
		F.O.B. Janesville, Wisconsin	
9071M		54 In. Shaft Driven Convertible Mower Deck (54C/54X)	1,300.00
		DESTINATION	
0202		United States and Canada	In Base Price
0230		Australia and New Zealand	Same Price
0195		Mexico	Same Price
0250		All Other Countries	Same Price
		ATTACHING PARTS/MOWER DECK LIFT	
1000		Attaching Parts for 2305, 2210 (Mechanical Mower Lift)	260.00
1001		Attaching Parts for 2305 (Independent Mower Lift) *Independent Lift is not Available on 2210.*	480.00
1010		Less Attaching Parts	In Base Price
		ATTACHMENTS FOR FIELD CONVERSION	
		Hydraulics:	
	LVB25630	Independent Lift Kit for 2305, 2025R, 2320 Tractors *Requires LVB25620 (Code 1001) Attaching Parts.* *Requires LVB25631 (Independent Lift Attaching Parts). Not Available for 2210 Tractors.*	298.53
	LVB25822	Loader/Mower Mechanical Diverter Valve Kit (2305, 2025R, 2320)	409.81
		Miscellaneous:	
	LVB25631	Attaching Parts for 2305 (Independent Mower Lift) *Requires LVB25630 (Independent Lift Kit). Not Available for 2210 Tractors.*	188.31
	LVB25419	Attaching Parts for 2305, 2210 (Mechanical Mower Lift)	298.53
		Mower Deck and Mower Deck Attachments:	
	BM24370	48C Draft arm kit, X700 Signature Series	63.13

54 In. Shaft Driven Convertible Mower Deck (54C/54X)

Continued

CODE	ATTACHMENT IDENTIFIER	DESCRIPTION	SUGGESTED LIST PRICE USD ($)
		ATTACHMENTS FOR FIELD CONVERSION Continued...	
	AM130907	Mower Deck Leveling Gauge	See Parts
	BM20827	Mulch Kit (54C/54D/54X)	212.93
	BM23648	Roller Striping Kit (X400/X500 HDGT, X700s) *Compatible with MY2004- (SN 040, 001-) 54C, 54X, 62X, and 60-In. 7-Iron Mowers used on X400/X500 HDGT and X700 Ultimate Tractors. 60HC Mowers used on X700 Signature Series Tractors. See Sales Manual for Additional Parts Requirements on MY2004-MY2007 (SN 040,001-100,000) 54C, 54X, 62C and 62X Decks.*	278.20
		Spanish North American Kit:	
	LVB26015	N American Spanish OM	19.26
	LVB26020	North American Spanish Labels	14.99

62 In. Shaft Driven Convertible Mower Deck (62C/62X)

Equipment for Base Machine

62 In. Shaft Driven convertible Mower Deck (62C/62X)
62 In. cutting width
Side discharge
Mulching capable
Material collection capable
Heavy duty 4 point mounting system
(4) Heavy duty rotateable gage wheels
40mm blade overlap
Formed heavy duty 3.4 mm steel
Formed edge around deck shell
Front anti-scalp roller
Shaft drive
Wash port
Greaseable deck spindles

CODE	ATTACHMENT IDENTIFIER	DESCRIPTION	SUGGESTED LIST PRICE USD ($)
		Select One Code From Each Required Category	
		BASE MACHINE	
		F.O.B. Janesville, Wisconsin	
9072M		62 In. Shaft Driven Convertible Mower Deck (62C/62X)	1,700.00
		DESTINATION	
0202		United States and Canada	In Base Price
0230		Australia and New Zealand	Same Price
0195		Mexico	Same Price
0250		All Other Countries	Same Price
		ATTACHING PARTS/MOWER DECK LIFT	
1000		Attaching Parts for 2305, 2210 (Mechanical Mower Lift)	260.00
1001		Attaching Parts for 2305 (Independent Mower Lift) *Independent Lift is not Available on 2210.*	480.00
1010		Less Attaching Parts	In Base Price
		ATTACHMENTS FOR FIELD CONVERSION	
		Hydraulics:	
	LVB25630	Independent Lift Kit for 2305, 2025R, 2320 Tractors *Requires LVB25620 (Code 1001) Attaching Parts.* *Requires LVB25631 (Independent Lift Attaching Parts). Not Available for 2210 Tractors.*	298.53
	LVB25822	Loader/Mower Mechanical Diverter Valve Kit (2305, 2025R, 2320)	409.81
		Miscellaneous:	
	LVB25631	Attaching Parts for 2305 (Independent Mower Lift) *Requires LVB25630 (Independent Lift Kit). Not Available for 2210 Tractors.*	188.31
	LVB25419	Attaching Parts for 2305, 2210 (Mechanical Mower Lift)	298.53
		Mower Deck and Mower Deck Attachments:	
	BM24370	48C Draft arm kit, X700 Signature Series	63.13

62 In. Shaft Driven Convertible Mower Deck (62C/62X)

Continued

CODE	ATTACHMENT IDENTIFIER	DESCRIPTION	SUGGESTED LIST PRICE USD ($)
		ATTACHMENTS FOR FIELD CONVERSION Continued...	
	AM130907	Mower Deck Leveling Gauge	See Parts
	BM21890	Mulch Kit (62C/62D/62X)	233.26
	BM23648	Roller Striping Kit (X400/X500 HDGT, X700s) *Compatible with MY2004- (SN 040, 001-) 54C, 54X, 62X, and 60-In. 7-Iron Mowers used on X400/X500 HDGT and X700 Ultimate Tractors. 60HC Mowers used on X700 Signature Series Tractors. See Sales Manual for Additional Parts Requirements on MY2004-MY2007 (SN 040,001-100,000) 54C, 54X, 62C and 62X Decks.*	278.20
		Spanish North American Kit:	
	LVB26015	N American Spanish OM	19.26
	LVB26020	North American Spanish Labels	14.99

54D In. OnRamp Mid-Mount Side Discharge Mower (For 2025R, 2320 Tractor)

Equipment for Base Machine

54 In. Cutting Width
Three Cutting Blades
10 Gauge Stamped Steel Deck
Front and Rear Quick Release Gauge Wheels with Memory Setting
PTO Shaft
Quick Release Belt Shields
Anti-Scalp Front Roller
Hinged Discharge Chute
Greasable Spindles
Front Lip Reinforcement
Less Attaching Parts
Deck Lockup
Mower Wash Port

CODE	ATTACHMENT IDENTIFIER	DESCRIPTION	SUGGESTED LIST PRICE USD ($)
		Select One Code From Each Required Category	
		BASE MACHINE	
		F.O.B. Davenport, Iowa	
0172LV		54D In. OnRamp Mid-Mount Side Discharge Mower (For 2025R, 2320 Tractor)	1,874.00
		ATTACHING PARTS/MOWER DECK LIFT	
1001		Attaching Parts (Mechanical Mower Lift) *For Independent Mower Lift, Code 1001 and LVB25630 Must be Ordered.*	362.00
1010		Less Attaching Parts	In Base Price
		ATTACHMENTS - ORDER AS DESIRED	
		Spanish North American Kit:	
9430		Spanish North American Operator's Manual and Decal Kit	No Charge
		ATTACHMENTS FOR FIELD CONVERSION	
		Hydraulics:	
	LVB25630	Independent Lift Kit for 2305, 2025R, 2320 Tractors *Requires LVB25620 (Code 1001) Attaching Parts.*	298.53
	LVB25822	Loader/Mower Mechanical Diverter Valve Kit (2305, 2025R, 2320)	409.81
		Miscellaneous:	
	LVB25620	Attaching Parts for 2025R, 2320 Tractor (Mechanical Mower Lift)	420.20
	LVB24899	Front Hitch/Mid-Mount Mower Combo Bracket (2025R, 2032R, 2320-2720) *Compatible with 4115 Tractor also. Required for Tool Free Change Between 54D or 62D OnRamp Mid-Mount Mower and Quik-Tatch Front Hitch (2025R, 2032R, 2320, 2520, 2720, 4115).*	127.33
		Mower Deck and Mower Deck Attachments:	
	AM130907	Mower Deck Leveling Gauge	See Parts
	BM20827	Mulch Kit (54C/54D/54X)	212.93

54D In. OnRamp Mid-Mount Side Discharge Mower (For 2025R, 2320 Tractor)

Continued

CODE	ATTACHMENT IDENTIFIER	DESCRIPTION	SUGGESTED LIST PRICE USD ($)
		ATTACHMENTS FOR FIELD CONVERSION Continued...	
		Spanish North American Kit:	
	LVB26015	N American Spanish OM	19.26
	LVB26020	North American Spanish Labels	14.99

54D In. Mid-Mount Side Discharge Mower (For 1023E, 1025R, 1026R Tractor)

Equipment for Base Machine

54 In. Cutting Width
Three Cutting Blades
10 Gauge Stamped Steel Deck
(4) Front and Rear Adjustable
  and Quick Release Gauge
  Wheels with Memoey Settings
PTO Shaft with Manual Connection
Quick Release Belt Shields
Hinged Discharge Chute
Greasable Spindles
Deck Lockup
Mower Wash Port

CODE	ATTACHMENT IDENTIFIER	DESCRIPTION	SUGGESTED LIST PRICE USD ($)
		Select One Code From Each Required Category	
		BASE MACHINE	
		F.O.B. Davenport, Iowa	
5310M		54D In. Mid-Mount Side Discharge Mower (For 1023E, 1025R, 1026R Tractor)	1,940.00
		ATTACHING PARTS/TRACTOR SELECTION	
1000		Attaching Parts 1023E, 1025R, 1026R Tractors (Mechanical Mower Lift)	In Base Price
1001		Attaching Parts 1023E, 1025R, 1026R Tractors (Hydraulic Mower Lift)	179.00
1010		Less Attaching Parts *PTO lift system not included. Only compatible with a tractor that already has a mower lift installed.*	-400.00
		PTO CONNECTION	
2000		Manual PTO Connection	In Base Price
2001		Auto PTO Coupler	247.00
2010		Less Drive Shaft	-182.00
		ATTACHMENTS FOR FIELD CONVERSION	
		Miscellaneous:	
	LVB26043	Attaching Parts 1023E, 1025R, 1026R Tractors (Hydraulic Mower Lift)	680.90
	LVB26042	Attaching Parts 1023E, 1025R, 1026R Tractors (Mechanical Mower Lift)	471.90
		Mower Deck and Mower Deck Attachments:	
	AM130907	Mower Deck Leveling Gauge	See Parts
	BM20827	Mulch Kit (54C/54D/54X)	212.93
		PTO Connection:	
	LVB26045	Auto PTO Coupler	506.00
	LVB26044	Manual PTO Connection	214.50
		Spanish North American Kit:	

54D In. Mid-Mount Side Discharge Mower (For 1023E, 1025R, 1026R Tractor)

Continued

CODE	ATTACHMENT IDENTIFIER	DESCRIPTION	SUGGESTED LIST PRICE USD ($)
		ATTACHMENTS FOR FIELD CONVERSION Continued...	
	LVB26020	North American Spanish Labels	14.99

62D In. OnRamp Mid-Mount Side Discharge Mower (For 2025R, 2320 Tractor)

Equipment for Base Machine

62 In. Cutting Width
Three Cutting Blades
10 Gauge Stamped Steel Deck
Front and Rear Quick Release Gauge Wheels with Memory Settings
PTO Shaft
Quick Release Belt Shields
Anti-Scalp Front Roller
Hinged Discharge Chute
Greasable Spindles
Front Lip Reinforcement
Less Attaching Parts
Deck Lockup
Mower Wash Port

CODE	ATTACHMENT IDENTIFIER	DESCRIPTION	SUGGESTED LIST PRICE USD ($)
		Select One Code From Each Required Category	
		BASE MACHINE	
		F.O.B. Davenport, Iowa	
0180LV		62D In. OnRamp Mid-Mount Side Discharge Mower (For 2025R, 2320 Tractor)	2,536.00
		ATTACHING PARTS/MOWER DECK LIFT	
1001		Attaching Parts (Mechanical Mower Lift) *For Independent Mower Lift, Code 1001 and LVB25630 Must be Ordered.*	362.00
1010		Less Attaching Parts	In Base Price
		ATTACHMENTS - ORDER AS DESIRED	
		Spanish North American Kit:	
9430		Spanish North American Operator's Manual and Decal Kit	No Charge
		ATTACHMENTS FOR FIELD CONVERSION	
		Hydraulics:	
	LVB25630	Independent Lift Kit for 2305, 2025R, 2320 Tractors *Requires LVB25620 (Code 1001) Attaching Parts.*	298.53
	LVB25822	Loader/Mower Mechanical Diverter Valve Kit (2305, 2025R, 2320)	409.81
		Miscellaneous:	
	LVB25620	Attaching Parts for 2025R, 2320 Tractor (Mechanical Mower Lift)	420.20
	LVB24899	Front Hitch/Mid-Mount Mower Combo Bracket (2025R, 2032R, 2320-2720) *Compatible with 4115 Tractor also. Required for Tool Free Change Between 54D or 62D OnRamp Mid-Mount Mower and Quik-Tatch Front Hitch (2025R, 2032R, 2320, 2520, 2720, 4115).*	127.33
		Mower Deck and Mower Deck Attachments:	
	AM130907	Mower Deck Leveling Gauge	See Parts
	BM21890	Mulch Kit (62C/62D/62X)	233.26

62D In. OnRamp Mid-Mount Side Discharge Mower (For 2025R, 2320 Tractor)

Continued

CODE	ATTACHMENT IDENTIFIER	DESCRIPTION	SUGGESTED LIST PRICE USD ($)
		ATTACHMENTS FOR FIELD CONVERSION Continued...	
		Spanish North American Kit:	
	LVB26020	North American Spanish Labels	14.99

62D In. OnRamp Mid-Mount Side Discharge Mower (For 2032R, 2520, 2720, 4115 Tractors)

Equipment for Base Machine

62 In. Cutting Width
Three Cutting Blades
10 Gauge Stamped Steel Deck
Front and Rear Quick Release Gauge Wheels with Memory Setting
PTO Shaft
Quick Release Belt Shields
Anti-Scalp Front Roller
Hinged Discharge Chute
Greasable Spindles
Front Lip Reinforcement
Less Attaching Parts
Mower Wash Port

CODE	ATTACHMENT IDENTIFIER	DESCRIPTION	SUGGESTED LIST PRICE USD ($)
		Select One Code From Each Required Category	
		BASE MACHINE	
		F.O.B. Davenport, Iowa	
0190LV		62D In. OnRamp Mid-Mount Side Discharge Mower (For 2032R, 2520, 2720, 4115 Tractors)	2,959.00
		ATTACHING PARTS/MOWER DECK LIFT	
1001		Attaching Parts (Mechanical Mower Lift) *For Independent Mower Lift (Not Available for 4115), LVB25605* *Must be Ordered with Code 1010 (Less Attaching Parts).*	400.00
1010		Less Attaching Parts	In Base Price
		ATTACHMENTS - ORDER AS DESIRED	
		Spanish North American Kit:	
9430		Spanish North American Operator's Manual and Decal Kit	No Charge
		ATTACHMENTS FOR FIELD CONVERSION	
		Hydraulics:	
	LVB25605	Independent Lift Kit for 2032R, 2520, 2720 *Not Available for 4115 Tractor.*	951.50
	LVB25823	Loader/Mower Mechanical Diverter Valve Kit (2032R, 2520, 2720)	540.10
		Miscellaneous:	
	LVB25902	Attaching Parts for 2032R, 2520, 2720, 4115 (Mechanical Mower Lift)	471.90
	LVB24899	Front Hitch/Mid-Mount Mower Combo Bracket (2025R, 2032R, 2320-2720) *Compatible with 4115 Tractor also. Required for Tool Free Change Between 54D or 62D OnRamp Mid-Mount Mower and Quik-Tatch Front Hitch (2025R, 2032R, 2320, 2520, 2720, 4115).*	127.33
		Mower Deck and Mower Deck Attachments:	
	AM130907	Mower Deck Leveling Gauge	See Parts
	LVB24962	Mower Height Latch Kit *For Use with Mechanical Mower Lift.*	160.60

62D In. OnRamp Mid-Mount Side Discharge Mower (For 2032R, 2520, 2720, 4115 Tractors)

Continued

CODE	ATTACHMENT IDENTIFIER	DESCRIPTION	SUGGESTED LIST PRICE USD ($)
		ATTACHMENTS FOR FIELD CONVERSION Continued...	
	BM21890	Mulch Kit (62C/62D/62X)	233.26
		Spanish North American Kit:	
	LVB26015	N American Spanish OM	19.26
	LVB26020	North American Spanish Labels	14.99

60D AutoConnect 7-Iron Mid-Mount Side Discharge Mower (For 3120-3720, 4310-4410 Tractors)

Equipment for Base Machine

60 In. Cutting Width
Three Cutting Blades
7 Gauge Stamped Steel Deck
Front and Rear Quick Release
Gauge Wheels with Memory Settings
PTO Shaft
Quick Release Belt Shields
Anti-Scalp Front Skid
Hinged Discharge Chute
Greasable Spindles
Front Lip Reinforcement
AutoConnect Mower Lift
Deck Lockup

CODE	ATTACHMENT IDENTIFIER	DESCRIPTION	SUGGESTED LIST PRICE USD ($)
		Select One Code From Each Required Category	
		BASE MACHINE	
		F.O.B. Davenport, Iowa	
7011LV		60D AutoConnect 7-Iron Mid-Mount Side Discharge Mower (For 3120-3720, 4310-4410 Tractors) *3000 Twenty Tractors Equipped with PRT Transmission (SN ending in 910000 and above) are NOT compatible with mid-mount mowers. 3120-3720 Tractors Require Mid PTO. Mower Deck is Not Compatible with R3 Turf Special Tires. LVB25820 Front Three-Point/Mid Mount Brackets is required if Tractor is also equipped with LVB24815 Front Three-Point Hitch with A-Frame (3120-3720 Tractors Only) and a Mid-Mount Mower. For Installation of Mid-Mount Mower on Cab Tractor, Must Order (1) LVA14927, (3) 19M7785, (1) 19M7788, (1) LVA15373 and (1) 34H311 Through Service Parts. See Sales Manual for 4310-4410 Requirements.*	3,385.00
		DESTINATION	
0202		United States and Canada	In Base Price
0195		Mexico	Same Price
		AUTOCONNECT MOWER LIFT	
1000		AutoConnect Mower Lift (3120-3720) *3000 Twenty Tractors Equipped with PRT Transmission (SN ending in 910000 and above) are NOT compatible with Mid-Mount Mowers. Includes Mid Hydraulic Cylinder Lift Kit.*	In Base Price
1010		Less AutoConnect Mower Lift	-1,213.00
		ATTACHMENTS - ORDER AS DESIRED	
9430		Spanish North American Operator's Manual and Decal Kit	No Charge
		ATTACHMENTS FOR FIELD CONVERSION	
		Hydraulics:	
	LVB25084	Third Selective Control Valve Kit *For 4310-4410 Tractors, Requires Dual SCV.*	316.80
	LVB25506	Third Selective Control Valve Kit (Open Station Only)	278.30

60D AutoConnect 7-Iron Mid-Mount Side Discharge Mower (For 3120-3720, 4310-4410 Tractors)

Continued

CODE	ATTACHMENT IDENTIFIER	DESCRIPTION	SUGGESTED LIST PRICE USD ($)
		ATTACHMENTS FOR FIELD CONVERSION Continued...	
	LVB24845	Third Selective control Valve Kit (Cab Only) *For 3320-3720 Tractors. Includes Rear Mounted Couplers, Hydraulic Lines and SCV Lever.*	333.30
		Miscellaneous:	
	LVB25544	Bracket Kit *Required to Install 60D In. Mower on 4310-4410 Tractors Manufactured after January 2003. See Sales Manual for Specific Serial Numbers.*	56.10
	LVB25820	Front Three-Point Hitch/Mid Mount Brackets *Required for use with LVB24815 Front Three-Point Hitch with A-Frame (3120-3720 Tractors Only)and AutoConenct Mowers.*	166.10
		Mower Deck and Mower Deck Attachments:	
	BM23978	60HC Mulch Kit *60D (for 3 Family Tractors) before SN 050001 is compatible with Mulch Kit TCB10953.*	238.61
	TCB10953	Mulch Kit (60 In. 7-Iron, 7-Iron II and 7-Iron PRO)	319.93

60D 7-Iron Mid Mount Side Discharge Mower (For 1023E, 1025R, 1026R Tractors)

Equipment for Base Machine

60 In. Cutting Width
Three Cutting Blades
7 Gauge Stamped Steel Deck
(4) Front and Rear Adjustable and Quick Release Gauge Wheels with Memoey Settings
PTO Shaft with Manual Connection
Quick Release Belt Shields
Hinged Discharge Chute
Greasable Spindles
Front Lip Reinforcement
Deck Lockup
Mower Wash Port

CODE	ATTACHMENT IDENTIFIER	DESCRIPTION	SUGGESTED LIST PRICE USD ($)
		Select One Code From Each Required Category	
		BASE MACHINE	
		F.O.B. Davenport, Iowa	
5320M		60D 7-Iron Mid Mount Side Discharge Mower (For 1023E, 1025R, 1026R Tractors)	2,350.00
		ATTACHING PARTS/TRACTOR SELECTION	
1000		Attaching Parts 1023E, 1025R, 1026R Tractors (Mechanical Mower Lift)	In Base Price
1001		Attaching Parts 1023E, 1025R, 1026R Tractors (Hydraulic Mower Lift)	179.00
1010		Less Attaching Parts *PTO lift system not included. Only compatible with a tractor that already has a mower lift installed.*	-400.00
		PTO CONNECTION	
2000		Manual PTO Connection	In Base Price
2001		Auto PTO Coupler	247.00
2010		Less Drive Shaft	-182.00
		ATTACHMENTS - ORDER AS DESIRED	
		Spanish North American Kit:	
9430		Spanish North American Operator's Manual and Decal Kit	No Charge
		ATTACHMENTS FOR FIELD CONVERSION	
		Miscellaneous:	
	LVB26043	Attaching Parts 1023E, 1025R, 1026R Tractors (Hydraulic Mower Lift)	680.90
	LVB26042	Attaching Parts 1023E, 1025R, 1026R Tractors (Mechanical Mower Lift)	471.90
		Mower Deck and Mower Deck Attachments:	
	BM23978	60HC Mulch Kit *60D (for 1 Family Tractors) before SN 030001 is compatible with Mulch Kit TCB10953.*	238.61

60D 7-Iron Mid Mount Side Discharge Mower (For 1023E, 1025R, 1026R Tractors)

Continued

CODE	ATTACHMENT IDENTIFIER	DESCRIPTION	SUGGESTED LIST PRICE USD ($)
		ATTACHMENTS FOR FIELD CONVERSION Continued...	
	AM130907	Mower Deck Leveling Gauge	See Parts
	TCB10953	Mulch Kit (60 In. 7-Iron, 7-Iron II and 7-Iron PRO)	319.93
		PTO Connection:	
	LVB26045	Auto PTO Coupler	506.00
	LVB26044	Manual PTO Connection	214.50
		Spanish North American Kit:	
	LVB26020	North American Spanish Labels	14.99

72 In. Mid-Mount Side Discharge Mower (For 2032R, 2520, 2720, 4115 Tractors)

Equipment for Base Machine

72 In. Cutting Width
Three Cutting Blades
9 Gauge Stamped Steel Deck
Front and Rear Adjustable Gauge Wheels
PTO Shaft
Mower Lift: Steel Rods from Tractor Rockshaft
Quick Release Belt Shields
Spring Loaded Front Gauge Wheels
Anti-Scalp Rollers (3)
Hinged Discharge Chute
Greasable Spindles
Front Lip Reinforcement
Less Attaching Parts

CODE	ATTACHMENT IDENTIFIER	DESCRIPTION	SUGGESTED LIST PRICE USD ($)
		Select One Code From Each Required Category	
		BASE MACHINE	
		F.O.B. Davenport, Iowa	
0040LV		72 In. Mid-Mount Side Discharge Mower (For 2032R, 2520, 2720, 4115 Tractors) *Tractors Must be Eqquipped with Front Attaching Support Kit.* *See Sales Manual for Front Attaching Support Requirements.*	3,220.00
		ATTACHING PARTS/MOWER DECK LIFT	
1000		Attaching Parts	583.00
1010		Less Attaching Parts	In Base Price
		ATTACHMENTS - ORDER AS DESIRED	
		Spanish North American Kit:	
9430		Spanish North American Operator's Manual and Decal Kit	No Charge
		European CE Kit:	
9300		European CE Version 72 In. Mid-Mount Side Discharge Mower *This Code Must be Ordered to Receive a 72 In. Mid-Mount Side Discharge Mower Which Meets CE Requirements for Decals.*	No Charge
		Miscellaneous:	
9435		Swedish Operator's Manual	No Charge
		ATTACHMENTS FOR FIELD CONVERSION	
		Miscellaneous:	
	LVB25263	Attaching Parts	687.50
	LVB25302	Front Attaching Support Kit *See Sales Manual for Front Attaching Support Requirements.*	59.91
		Mower Deck and Mower Deck Attachments:	
	BM18151	72 In. Tricycler Mulch Kit	359.70
	LVB24962	Mower Height Latch Kit	160.60
		Spanish North American Kit:	

72 In. Mid-Mount Side Discharge Mower (For 2032R, 2520, 2720, 4115 Tractors)

Continued

CODE	ATTACHMENT IDENTIFIER	DESCRIPTION	SUGGESTED LIST PRICE USD ($)
		ATTACHMENTS FOR FIELD CONVERSION Continued...	
	LVB26020	North American Spanish Labels	14.99
	LVB26017	North American Spanish OM	19.80

72D AutoConnect 7-Iron Mid-Mount Side Discharge Mower(For 3120-3720 Tractors)

Equipment for Base Machine

72 In. Cutting Width
Three Cutting Blades
7 Gauge Stamped Steel Deck
Front and Rear Quick Release
Gauge Wheels with Memory Settings
PTO Shaft
Quick Release Belt Shields
Anti-Scalp Front Skid
Hinged Discharge Chute
Greasable Spindles
Front Lip Reinforcement
AutoConnect Mower Lift
Deck Lockup

CODE	ATTACHMENT IDENTIFIER	DESCRIPTION	SUGGESTED LIST PRICE USD ($)
		Select One Code From Each Required Category	
		BASE MACHINE	
		F.O.B. Davenport, Iowa	
7021LV		72D AutoConnect 7-Iron Mid-Mount Side Discharge Mower(For 3120-3720 Tractors) *3000 Twenty Tractors Equipped with PRT Transmission (SN ending in 910000 and above) are NOT compatible with Mid-Mount Mowers. 3120-3720 Tractors Require Mid PTO. Mower Deck is Not Compatible with R3 Turf Special or R1 Tires, See Sales Manual for Tire/Mower Clearance Chart. LVB25820 Front Three-Point/Mid Mount Brackets is Required if Tractor is also equipped with LVB24815 Front Three-Point Hitch with A-Frame (3120-3720 Tractors Only) and a Mid-Mount Mower. For Installation of Mid-Mount Mower on Cab Tractor, Must Order (1) LVA14927, (3) 19M7785 , (1) 19M7788, (1) LVA15373 and (1) 34H311 Through Service Parts. See Sales Manual for 4310-4410 Requirements.*	4,059.00
		DESTINATION	
0202		United States and Canada	In Base Price
0195		Mexico	Same Price
		AUTOCONNECT MOWER LIFT	
1000		AutoConnect Mower Lift (3120-3720) *3000 Twenty Tractors Equipped with PRT Transmission (SN ending in 910000 and above) are NOT compatible with Mid-Mount Mowers. Includes Mid Hydraulic Cylinder Lift Kit.*	In Base Price
1010		Less AutoConnect Mower Lift	-1,213.00
		ATTACHMENTS - ORDER AS DESIRED	
9430		Spanish North American Operator's Manual and Decal Kit	No Charge
		ATTACHMENTS FOR FIELD CONVERSION	
		Hydraulics:	
	LVB25084	Third Selective Control Valve Kit *For 4310-4410 Tractors, Requires Dual SCV.*	316.80
	LVB25506	Third Selective Control Valve Kit (Open Station Only)	278.30

72D AutoConnect 7-Iron Mid-Mount Side Discharge Mower(For 3120-3720 Tractors)

Continued

CODE	ATTACHMENT IDENTIFIER	DESCRIPTION	SUGGESTED LIST PRICE USD ($)
		ATTACHMENTS FOR FIELD CONVERSION Continued...	
	LVB24845	Third Selective control Valve Kit (Cab Only) *For 3320-3720 Tractors. Includes Rear Mounted Couplers, Hydraulic Lines and SCV Lever.*	333.30
		Miscellaneous:	
	BLV10079	AutoConnect Mower Lift Kit (3120-3720, 4310-4410) *3000 Twenty Tractors Equipped with PRT Transmission (SN ending in 910000 and above) are NOT compatible with Mid-Mount Mowers. Includes Mid Hydraulic Cylinder Lift Kit.*	1,412.40
	LVB25544	Bracket Kit *Required to Install 72D In. Mower on 4310-4410 Tractors Manufactured after January 2003. See Sales Manual for Specific Serial Numbers.*	56.10
	LVB25820	Front Three-Point Hitch/Mid Mount Brackets *Required for use with LVB24815 Front Three-Point Hitch with A-Frame (3120-3720 Tractors Only)and AutoConenct Mowers.*	166.10
		Mower Deck and Mower Deck Attachments:	
	TCB10951	Mulch Kit (72 In. 7-Iron, 7-Iron II and 7-Iron PRO)	331.70

72 In. 7-Iron Mid-Mount Side Discharge Mower (For 4120-4720, 4500-4700, 4510-4710 Tractors)

Equipment for Base Machine

```
72 In. Cutting Width                Anti-Scalp Rollers (2)
Three Cutting Blades                Hinged Discharge Chute
7 Gauge Stamped Steel Deck          Greasable Spindles
Front and Rear Adjustable           Front Lip Reinforcement
 Gauge Wheels                       Less Attaching Parts
Mowerlift: Steel Rods from          Less PTO Shaft
 Tractor Rockshaft                  Deck Lockup
Removable Belt Shields
Spring Loaded Front Gauge Wheels
```

CODE	ATTACHMENT IDENTIFIER	DESCRIPTION	SUGGESTED LIST PRICE USD ($)
		Select One Code From Each Required Category	
		BASE MACHINE	
		F.O.B. Davenport, Iowa	
0042LV		72 In. 7-Iron Mid-Mount Side Discharge Mower (For 4120-4720, 4500-4700, 4510-4710 Tractors) *4000 Twenty Tractors with SN ending in 916000 (OOS) and 946000 (CAB) and above are NOT compatible with Mid-Mount Mowers. Tractors Require Mid PTO. Mower Deck is Not Compatible with R3 Turf Special or R1 Tires, R4 Tires will Rub if Deck is Raised to Full Transport Height. See Sales Manual for Tire/Mower Clearance Chart. 4510-4710 Tractors Require LVU14258 Oil Filter when Installing 72 In. Mower to Prevent Contact Between the Oil Filter and Mower Lift System. 00 Series and 10 Series Tractors Require (2) M148759 Front Plates for Installation of Mower Deck.*	3,220.00
		ATTACHING PARTS/MOWER DECK LIFT	
1000		Attaching Parts *Includes PTO Shaft.*	1,255.00
1010		Less Attaching Parts	In Base Price
		ATTACHMENTS - ORDER AS DESIRED	
		Spanish North American Kit:	
9430		Spanish North American Operator's Manual and Decal Kit	No Charge
		European CE Kit:	
9300		European CE Version 72 In. Mid-Mount Side Discharge Mower *This Code Must be Ordered to Receive a 72 In. Mid-Mount Side Discharge Mower Which Meets CE Requirements for Decals.*	No Charge
		Miscellaneous:	
9435		Swedish Operator's Manual	No Charge
		ATTACHMENTS FOR FIELD CONVERSION	

72 In. 7-Iron Mid-Mount Side Discharge Mower (For 4120-4720, 4500-4700, 4510-4710 Tractors)

Continued

CODE	ATTACHMENT IDENTIFIER	DESCRIPTION	SUGGESTED LIST PRICE USD ($)
		ATTACHMENTS FOR FIELD CONVERSION Continued...	
		Miscellaneous:	
	LVB25554	7-Iron Deck Attaching Parts and PTO Shaft *00 Series and 10 Series Tractors require (2) M148759 Front Plates for Installation of Mower Deck.*	1,479.50
	M148759	Front Plate	See Parts
	LVU14258	Oil Filter	See Parts
		Mower Deck and Mower Deck Attachments:	
	TCB10951	Mulch Kit (72 In. 7-Iron, 7-Iron II and 7-Iron PRO)	331.70
		Spanish North American Kit:	
	LVB26018	N. American Spanish OM	19.80
	LVB26020	North American Spanish Labels	14.99

52 In. Quick-Hitch Rotary Broom (For X400/X500, HDGT's, X700's, 1023E, 1025R, 1026R, 2210, 2305, 2025R, 2032R, 2320, 2520, 2720, 4010, 4100, 4110, 4115 Tractors)

Equipment for Base Machine

52 In. Clearing Width "Straight"
48 In. Clearing Width "Angled"
Storage Stands
21 In. Diameter Polypropylene Brush
Gearbox with 3:1 Reduction
Heavy Duty No. 50 Chain Drive
(2) Adjustable Rear Mounting
Caster Wheels
Brush Head Height Adjustment
Three Spare Driveshaft Shear Bolts "Mounted to Shell"
Less Front Quick-Hitch
Less Hydraulic Angling
Less Front PTO
Less Implement Drive Shaft

CODE	ATTACHMENT IDENTIFIER	DESCRIPTION	SUGGESTED LIST PRICE USD ($)

Select One Code From Each Required Category

BASE MACHINE

F.O.B. Davenport, Iowa

3880M		52 In. Quick-Hitch Rotary Broom (For X400/X500, HDGT's, X700's, 1023E, 1025R, 1026R, 2210, 2305, 2025R, 2032R, 2320, 2520, 2720, 4010, 4100, 4110, 4115 Tractors) *X700, X710, X465 and X475 Requires BM20761 Hydraulic Coupler Kit. See Sales Manual for Ballast Requirements.* *Not Compatible with BM17347, 425-455 Quick-Hitch Updated for Use on X400/X500 HDGT's and X700's with BM20979 Front-Hitch Angling Retro-Fit Kit.* *Compact Tractors Require Dual Selective Control Valve and Front Attaching Support Kit. See Sales Manual for Front Attaching Support Requirements.*	2,142.00

FRONT QUICK-HITCH

1000		Front Quick-Hitch and Hydraulic Lift (For X400/X500 HDGT's, X700's)	603.00
1001		Front Quick-Hitch and Hydraulic Lift (1023E, 1025R, 1026R)	688.00
1005		Front Quick-Hitch and Hydraulic Lift (2210, 2305)	641.00
1006		Front Quick-Hitch and Hydraulic Lift (2025R, 2032R, 2320, 2520, 2720, 4010, 4100, 4110, 4115)	688.00
1010		Less Front Quick-Hitch	In Base Price

HYDRAULIC ANGLING CYLINDER

2001		Hydraulic Angling (1023E, 1025R, 1026R)	187.00
2000		Hydraulic Angling (For X400/X500 HDGT's, X700's)	186.00
2005		Hydraulic Angling (2210, 2305)	187.00
2006		Hydraulic Angling (2025R, 2032R, 2320, 2520, 2720, 4010, 4100, 4110, 4115)	193.00
2010		Less Hydraulic Angling	In Base Price

52 In. Quick-Hitch Rotary Broom (For X400/X500, HDGT's, X700's, 1023E, 1025R, 1026R, 2210, 2305, 2025R, 2032R, 2320, 2520, 2720, 4010, 4100, 4110, 4115 Tractors)

Continued

CODE	ATTACHMENT IDENTIFIER	DESCRIPTION	SUGGESTED LIST PRICE USD ($)
		HYDRAULIC ANGLING CYLINDER Continued...	
		2000 RPM FRONT PTO KIT	
3000		2WD 2000 RPM Front PTO (X400 HDGT's, X700, X720, X724, X740, X744, X710, X730, X734, X750, X754)	231.00
3001		4WD 2000 RPM Front PTO (X500 HDGT's, X728, X729, X748, X749, X738, X739, X758) *For European RII Homologation Tractors, also order BM20978* *Front PTO Shield. Required to Meet Homologation Standards.* *Not Required for CE.*	245.00
3003		2000 RPM Front PTO (4100 and 4110)	254.00
3004		2000 RPM Front PTO (4010 and 4115)	254.00
3005		2000 RPM Front PTO (2210, 2305)	268.00
3006		2000 RPM Front PTO (2025R, 2320)	249.00
3007		2000 RPM Front PTO (2032R, 2520, 2720)	249.00
3009		2000 RPM Front PTO (1023E, 1025R, 1026R) *For tractors with RIO.Serial numbers starting:* *1023E - 1LV1023ETCH210309* *1026R - 1LV1026RHCH210658* *1026R Tractor Loader Backhoe - 1LV1026RECH210659* *Fits all 1025R Tractors*	322.00
3010		Less 2000 RPM Front PTO	In Base Price
		IMPLEMENT DRIVE SHAFT	
4000		Implement Drive Shaft (X400/X500 HDGT's, X700's, 1023E, 1025R, 1026R, 2210, 2305)	245.00
4001		European RII Implement Drive Shaft *Includes Shielding for CE, Supplemental CE Labels, FIGS OM.* *for X400/X500 HDGT's and X700's.*	290.00
4002		Implement Drive Shaft (2025R, 2032R, 2320, 2520, 2720, 4010, 4100, 4110, 4115)	255.00
4010		Less Implement Drive Shaft	In Base Price
		ATTACHMENTS FOR FIELD CONVERSION	
		Front Hitch:	
	LVB26047	Front Quick-Hitch and Hydraulic Lift (1023E, 1025R, 1026R)	788.59
	LVB24898	Front Quick-Hitch and Hydraulic Lift (2025R, 2032R, 2320 - 2720) *Fits also 4010, 4100, 4110 and 4115 Tractors for 47SB only.*	788.59
	BM20921	Front Quick-Hitch and Hydraulic Lift (2305) *Fits also 2210 Tractors (for 47SB only).*	736.16

52 In. Quick-Hitch Rotary Broom (For X400/X500, HDGT's, X700's, 1023E, 1025R, 1026R, 2210, 2305, 2025R, 2032R, 2320, 2520, 2720, 4010, 4100, 4110, 4115 Tractors)

Continued

CODE	ATTACHMENT IDENTIFIER	DESCRIPTION	SUGGESTED LIST PRICE USD ($)
		ATTACHMENTS FOR FIELD CONVERSION Continued...	
	BM19782	Front Quick-Hitch and Hydraulic Lift (X400/X500 HDGT's, X700's) *Also Order BM20837, Angling Cylinder to Hydraulically Angle the Front Hitch.*	692.29
		Front PTO:	
	BLV10051	2000 RPM Front PTO (1023E, 1025R, 1026R) *For tractors with RIO.Serial numbers starting:* *1023E - 1LV1023ETCH210309* *1026R - 1LV1026RHCH210658* *1026R Tractor Loader Backhoe - 1LV1026RECH210659* *Fits all 1025R Tractors*	369.16
	LVB24801	2000 RPM Front PTO (2025R, 2032R, 2520, 2720, 3120-3720)	285.69
	LVB24900	2000 RPM Front PTO (2025R, 2320)	285.69
	LVB25966	2000 RPM Front PTO (2210, 2305)	306.01
	BM18695	2000 RPM Front PTO (4100, 4110)	291.04
	LVB25305	2000 RPM Front PTO Kit (4010, 4115)	291.04
	BM24361	2000 RPM Mid-to-Front PTO Kit, 2WD (X400 HDGT's, X700's) *For Homologation Tractors, also Order BM20966 Front PTO Shield. Required to Meet Homologation Standards. Not Required for CE.*	298.53
	BM20991	2000 RPM Mid-to-Front PTO Kit, 2WD (X400 HDGT's, X700, X720, X724, X740, X744) *For European RII Homologation Tractors, also Order BM20966 Front PTO Shield. Required to Meet Homologation Standards. Not Required for CE.*	264.29
	BM24362	4WD 2000 RPM Front PTO (X500 HDGT's, X700's) *For European RII Homologation Tractors, also Order BM20978 Front PTO Shield. Required to Meet Homologation Standards. Not Required for CE.*	298.53
	BM22560	4WD 2000 RPM Front PTO (X500 HDGT's, X728, X729, X748, X749) *For European RII Homologation Tractors, also Order BM20978 Front PTO Shield. Required to Meet Homologation Standards. Not Required for CE.*	281.41
	BM20978	Front PTO Shield *For BM20382 (4WD) 2000 RPM Front PTO when used on X595 or X748. Required to Meet Homologation Standards. Not Required for CE.*	139.10
	BM20966	Front PTO Shield Kit *For BM20991 (2WD) 2000 RPM Front PTO when used on X495 or X740. Required to Meet Homologation Standards. Not Required for CE.*	97.37
		Hydraulics:	
	LVB26108	Hydraulic Angling (1023E, 1025R, 1026R)	215.07
	LVB24901	Hydraulic Angling (2025R, 2032R, 2320, 2520, 2720, 4010, 4100, 4110, 4115)	220.41
	BM20837	Hydraulic Angling (X400/X500 HDGT's, X700's) *For BM19782 Front Quick Hitch*	212.93

52 In. Quick-Hitch Rotary Broom (For X400/X500, HDGT's, X700's, 1023E, 1025R, 1026R, 2210, 2305, 2025R, 2032R, 2320, 2520, 2720, 4010, 4100, 4110, 4115 Tractors)

Continued

CODE	ATTACHMENT IDENTIFIER	DESCRIPTION	SUGGESTED LIST PRICE USD ($)
		ATTACHMENTS FOR FIELD CONVERSION Continued...	
	BM20922	Hydraulic Angling Kit (2210, 2305)	215.07
	BM20761	Hydraulic Coupler Kit *Required on X700, X465, X475 and 425 Tractors.*	54.57
		Miscellaneous:	
	BM20714	Click-N-Go Bracket (X400/X500 HDGT's, X700's)	112.36
	BM21777	Deflector Kit for 52 Broom	60.99
	LVB25302	Front Attaching Support Kit *For 2520, 2720, 4100, 4110, 4115 Tractors. See Sales Manual for Front Attaching Support Requirements.*	59.91
	LVB26046	Front Attaching Support Kit (1023E, 1025R, 1026R) *See Sales Manual for Front Attaching Support Requirements.*	67.41
	LVB24895	Front Attaching Support Kit (2025R, 2320) *See Sales Manual for Front Attaching Support Requirements.*	82.39
	LVB25396	Front Attaching Support Kit (2305) *Fits also 2210 Tractors (for 47SB only.) See Sales Manual for Front Attaching Support Requirements.*	59.91
	LVB24899	Front Hitch/Mid-Mount Mower Combo Bracket (2025R, 2032R, 2320-2720) *Compatible with 4115 Tractor also. Required for Tool Free Change Between 54D or 62D OnRamp Mid-Mount Mower and Quik-Tatch Front Hitch (2025R, 2032R, 2320, 2520, 2720, 4115).*	127.33
	BM20753	Front Light Kit *For X400/X500 HDGT and X700 Series Garden Tractors.*	207.59
	BM20836	Implement Drive Shaft (2025R, 2032R, 2320, 2520, 2720, 4010, 4100, 4110, 4115)	293.19
	BM21854	Implement Drive Shaft for Rotary Brooms (X400/X500 HDGT's, X700's, 425-455, 1023E, 1025R, 1026R, 2210, 2305)	281.41
	BM21853	Thatching Wheel Kit for 52 Broom	263.21
	TY25326	Tire Chains for 26x10.50-12 Turf Drive Tires *For X400 All Wheel Steer Tractors with Standard 26x10.5-12 In Tires.*	See Parts
	BM22725	Wheel Spacer Kit *For all Wheel Steer Tractors when Installing TY15956 Chains.*	157.29
		Seats / Wheels / Tires:	
	TY15958	Tire Chains (Pair) for 26x12-12 Tires	See Parts
		Weights:	
	BM20715	Ballast Box (Click-N-Go) (X400/X500 HDGT's, X700's) *Requires BM20714 Click-N-Go Bracket.*	283.56
	R66949	Quik-Tatch Weight, 42 Lb.	62.06
	BM20779	Rear Click-N-Go Weight Bracket (X400/X500 HDGT's, X700's) *Requires BM20714 Click-N-Go Bracket.*	156.21

52 In. Quick-Hitch Rotary Broom (For X400/X500, HDGT's, X700's, 1023E, 1025R, 1026R, 2210, 2305, 2025R, 2032R, 2320, 2520, 2720, 4010, 4100, 4110, 4115 Tractors)

Continued

60 In. Heavy-Duty Rotary Broom (For X400/X500 HDGT's, X700's, 1023E, 1025R, 1026R, 2305, 2025R, 2032R, 2320, 2520, 2720, 3120-3720, 2210, 4010 Thru 4400-4410 Tractors)

Equipment for Base Machine

57 In. Clearing Width "Straight"
50 In. Clearing Width "Angled"
Storage Stands
26 In. Diameter Polypropylene Brush
Gearbox with 3:1 Reduction
Chain and Sprocket Final Drive
(2) Adjustable Rear Mounted Caster Wheels
Broom Head Float
Four Spare Driveshaft Shear Bolts Two Sizes, "Mounted to Shell"
Less Mounting Frame
Less Front Quick-Hitch
Less Front PTO
Less Implement Drive Shaft

CODE	ATTACHMENT IDENTIFIER	DESCRIPTION	SUGGESTED LIST PRICE USD ($)
		Select One Code From Each Required Category	
		BASE MACHINE	
		F.O.B. Davenport, Iowa	
3790M		60 In. Heavy-Duty Rotary Broom (For X400/X500 HDGT's, X700's, 1023E, 1025R, 1026R, 2305, 2025R, 2032R, 2320, 2520, 2720, 3120-3720, 2210, 4010 Thru 4400-4410 Tractors) *X710, X465 and X475 Tractors Require BM20761 Hydraulic Coupler Kit.* *Not Compatible with BM17347, 400 Series Quick Hitch.* *Compact Tractors Require Dual Selective Control Valve and Mid PTO. Small Chassis Compact Tractors also Require Front Attaching Support Kit. See Sales Manual for Front Attaching Support Requirements. 3120-3720 Tractors with Mid-Mount Mowers for use with Front Three-Point Hitch with A-Frame require LVB25820 (AutoConnect decks) or LVB24810 (old 7-Iron decks).*	3,279.00
		MOUNTING FRAME	
1000		Mounting Frame (X400/X500 HDGT's, X700's, 1023E, 1025R, 1026R, 2210, 2305, 2025R, 2032R, 2320, 2520, 2720, 4010, 4100, 4110, 4115)	385.00
1001		Mounting Frame with Drive Shaft and Hydraulic Angling (4200-4400 and 4210-4410)	1,182.00
1002		Mounting Frame with Drive Shaft and Hydraulic Angling (3120-3720)	802.00
1010		Less Mounting Frame	In Base Price
		FRONT QUICK-HITCH / HYDRAULIC LIFT	
2000		Front Quick-Hitch and Hydraulic Lift (X400/X500 HDGT's, X700's)	603.00
2002		Front Quick-Hitch and Hydraulic Lift (4210-4410)	725.00
2003		Front Quick-Hitch and Hydraulic Lift (4200-4400) *Availability Limited to Dealer Inventory.*	725.00
2004		Front Quick-Hitch and Hydraulic Lift (2210, 2305)	641.00

60 In. Heavy-Duty Rotary Broom (For X400/X500 HDGT's, X700's, 1023E, 1025R, 1026R, 2305, 2025R, 2032R, 2320, 2520, 2720, 3120-3720, 2210, 4010 Thru 4400-4410 Tractors)

Continued

CODE	ATTACHMENT IDENTIFIER	DESCRIPTION	SUGGESTED LIST PRICE USD ($)
		FRONT QUICK-HITCH / HYDRAULIC LIFT Continued...	
2005		Front Quick-Hitch and Hydraulic Lift (2025R, 2032R, 2320, 2520, 2720, 4010, 4100, 4110, 4115)	688.00
2006		Front Three-Point Hitch with A-Frame Quick Attach System (3120-3720)	1,242.00
2007		Front Quick-Hitch and Hydraulic Lift (1023E, 1025R, 1026R)	688.00
2010		Less Front Quick-Hitch and Hydraulic Lift	In Base Price
		HYDRAULIC ANGLING	
		Hydraulic Angling for 3120-3720, 4200-4400 and 4210-4410 Tractors are Included in Code 1001/1002.	
3000		Hydraulic Angling (X400/X500 HDGT's, X700's)	186.00
3002		Hydraulic Angling Kit (2210, 2305)	187.00
3003		Hydraulic Angling (2025R, 2032R, 2320, 2520, 2720, 4010, 4100, 4110, 4115)	193.00
3004		Hydraulic Angling (1023E, 1025R, 1026R)	187.00
3010		Less Hydraulic Angling	In Base Price
		2000 RPM FRONT PTO KIT	
4000		2WD Front PTO (X400 HDGT's, X700, X720, X724, X740, X744, X710, X730, X734, X750, X754)	231.00
4001		4WD Front PTO (X500 HDGT's, X728, X729, X748, X749, X738, X739, X758)	245.00
4002		2000 RPM Front PTO Kit (4100, 4110)	254.00
4003		2000 RPM Front PTO Kit (4010, 4115)	254.00
4004		2000 RPM Front PTO Kit (4200-4400, 4210-4410)	214.00
4005		2000 RPM Front PTO Kit (2210, 2305)	268.00
4006		2000 RPM Front PTO Kit (2025R, 2320)	249.00
4007		2000 RPM Front PTO Kit (2032R, 2520, 2720, 3120-3720)	249.00
4008		2000 RPM Front PTO (1023E, 1026R) *For tractors without RIO.Serial numbers before:* *1023E - 1LV1023ETCH210309* *1026R - 1LV1026RHCH210658* *1026R Tractor Loader Backhoe - 1LV1026RECH210659*	268.00
4009		2000 RPM Front PTO (1023E, 1025R, 1026R) *For tractors with RIO.Serial numbers starting:* *1023E - 1LV1023ETCH210309* *1026R - 1LV1026RHCH210658* *1026R Tractor Loader Backhoe - 1LV1026RECH210659* *Fits all 1025R Tractors*	322.00

60 In. Heavy-Duty Rotary Broom (For X400/X500 HDGT's, X700's, 1023E, 1025R, 1026R, 2305, 2025R, 2032R, 2320, 2520, 2720, 3120-3720, 2210, 4010 Thru 4400-4410 Tractors)

Continued

CODE	ATTACHMENT IDENTIFIER	DESCRIPTION	SUGGESTED LIST PRICE USD ($)
		2000 RPM FRONT PTO KIT Continued...	
4010		Less 2000 RPM Front PTO Kit	In Base Price
		IMPLEMENT DRIVE SHAFT	
		Drive Shaft for 3120-3720, 4200-4400 and 4210-4410 Tractors are Included in Code 1001/1002.	
5001		Implement Drive Shaft (2025R, 2032R, 2320, 2520, 2720, 4010, 4100, 4110, 4115)	255.00
5003		Implement Drive Shaft (X400/X500 HDGT's, X700's, 1023E, 1025R, 1026R, 2210, 2305)	245.00
5010		Less Implement Drive Shaft	In Base Price
		ATTACHMENTS FOR FIELD CONVERSION	
		Front Hitch:	
	LVB24797	A-Frame Quick Attach System (3120-3720)	190.46
	LVB26047	Front Quick-Hitch and Hydraulic Lift (1023E, 1025R, 1026R)	788.59
	LVB24898	Front Quick-Hitch and Hydraulic Lift (2025R, 2032R, 2320 - 2720) *Fits also 4010, 4100, 4110 and 4115 Tractors for 47SB only.*	788.59
	BM20921	Front Quick-Hitch and Hydraulic Lift (2305) *Fits also 2210 Tractors (for 47SB only).*	736.16
	LVB25306	Front Quick-Hitch and Hydraulic Lift (4210-4410)	830.31
	BM19782	Front Quick-Hitch and Hydraulic Lift (X400/X500 HDGT's, X700's)	692.29
	LVB25878	Front Three-Point Hitch (3120-3720)	1,248.69
	LVB24815	Front Three-Point Hitch with A-Frame Quick Attach System (3120-3720) *Consists of (1) LVB24797, (1) LVB25759, (1) LVB25878.*	See Parts
		Front PTO:	
	BLV10051	2000 RPM Front PTO (1023E, 1025R, 1026R) *For tractors with RIO.Serial numbers starting:* *1023E - 1LV1023ETCH210309* *1026R - 1LV1026RHCH210658* *1026R Tractor Loader Backhoe - 1LV1026RECH210659* *Fits all 1025R Tractors*	369.16
	LVB24801	2000 RPM Front PTO (2025R, 2032R, 2520, 2720, 3120-3720)	285.69
	LVB24900	2000 RPM Front PTO (2025R, 2320)	285.69
	LVB25966	2000 RPM Front PTO (2210, 2305)	306.01
	BM18695	2000 RPM Front PTO (4100, 4110)	291.04
	BM19576	2000 RPM Front PTO (4200-4400, 4210-4410)	245.03
	LVB25305	2000 RPM Front PTO Kit (4010, 4115)	291.04

60 In. Heavy-Duty Rotary Broom (For X400/X500 HDGT's, X700's, 1023E, 1025R, 1026R, 2305, 2025R, 2032R, 2320, 2520, 2720, 3120-3720, 2210, 4010 Thru 4400-4410 Tractors)

Continued

CODE	ATTACHMENT IDENTIFIER	DESCRIPTION	SUGGESTED LIST PRICE USD ($)
		ATTACHMENTS FOR FIELD CONVERSION Continued...	
	BM24361	2000 RPM Mid-to-Front PTO Kit, 2WD (X400 HDGT's, X700's) *For Homologation Tractors, also Order BM20966 Front PTO Shield. Required to Meet Homologation Standards. Not Required for CE.*	298.53
	BM20991	2000 RPM Mid-to-Front PTO Kit, 2WD (X400 HDGT's, X700, X720, X724, X740, X744) *For European RII Homologation Tractors, also Order BM20966 Front PTO Shield. Required to Meet Homologation Standards. Not Required for CE.*	264.29
	BM24362	4WD 2000 RPM Front PTO (X500 HDGT's, X700's)	298.53
	BM22560	4WD 2000 RPM Front PTO (X500 HDGT's, X728, X729, X748, X749) *For European RII Homologation Tractors, also Order BM20978 Front PTO Shield. Required to Meet Homologation Standards. Not Required for CE.*	281.41
	LVB25759	Front PTO Bracket (3120-3720)	82.39
		Hydraulics:	
	LVB26108	Hydraulic Angling (1023E, 1025R, 1026R)	215.07
	LVB24901	Hydraulic Angling (2025R, 2032R, 2320, 2520, 2720, 4010, 4100, 4110, 4115)	220.41
	BM20837	Hydraulic Angling (X400/X500 HDGT's, X700's)	212.93
	BM20922	Hydraulic Angling Kit (2210, 2305)	215.07
	BM20761	Hydraulic Coupler Kit *Required on X700, X465, X475 and 425 Tractors.*	54.57
		Miscellaneous:	
	BM20706	19.25x12.5x6.5 Heavy Duty Wheel Kit	361.66
	BM20714	Click-N-Go Bracket (X400/X500 HDGT's, X700's)	112.36
	BM19805	Debris Deflector	408.74
	LVB25302	Front Attaching Support Kit *For 2520, 2720, 4100, 4110, 4115 Tractors. See Sales Manual for Front Attaching Support Requirements.*	59.91
	LVB26046	Front Attaching Support Kit (1023E, 1025R, 1026R) *See Sales Manual for Front Attaching Support Requirements.*	67.41
	LVB24895	Front Attaching Support Kit (2025R, 2320) *See Sales Manual for Front Attaching Support Requirements.*	82.39
	LVB25396	Front Attaching Support Kit (2305) *Fits also 2210 Tractors (for 47SB only.) See Sales Manual for Front Attaching Support Requirements.*	59.91
	LVB24899	Front Hitch/Mid-Mount Mower Combo Bracket (2025R, 2032R, 2320-2720) *Compatible with 4115 Tractor also. Required for Tool Free Change Between 54D or 62D OnRamp Mid-Mount Mower and Quik-Tatch Front Hitch (2025R, 2032R, 2320, 2520, 2720, 4115).*	127.33

60 In. Heavy-Duty Rotary Broom (For X400/X500 HDGT's, X700's, 1023E, 1025R, 1026R, 2305, 2025R, 2032R, 2320, 2520, 2720, 3120-3720, 2210, 4010 Thru 4400-4410 Tractors)

Continued

CODE	ATTACHMENT IDENTIFIER	DESCRIPTION	SUGGESTED LIST PRICE USD ($)
		ATTACHMENTS FOR FIELD CONVERSION Continued...	
	BM20753	Front Light Kit *For X400/X500 HDGT and X700 Series Garden Tractors.*	207.59
	LVB25820	Front Three-Point Hitch/Mid Mount Brackets *Required for use with LVB24815 Front Three-Point Hitch with A-Frame (3120-3720 Tractors Only)and AutoConenct Mowers.*	166.10
	LVB24810	Front Three-Point Hitch/Mid Mount Mower Draft Arms	228.99
	BM20836	Implement Drive Shaft (2025R, 2032R, 2320, 2520, 2720, 4010, 4100, 4110, 4115)	293.19
	LVB24956	Implement Drive Shaft (3120-3720)	169.06
	BM21854	Implement Drive Shaft for Rotary Brooms (X400/X500 HDGT's, X700's, 425-455, 1023E, 1025R, 1026R, 2210, 2305)	281.41
	BM20626	Mounting Frame (X400/X500 HDGT's, X700's, 1023E, 1025R, 1026R, 2210, 2305, 2025R, 2032R, 2320, 2520, 2720, 4010, 4100, 4110, 4115)	440.84
	LVB25879	Mounting Frame and Hydraulic Angling (3120-3720)	761.84
	BM19804	Mounting Frame with Drive Shaft and Hydraulic Angling (4200-4400, 4210-4410)	1,355.69
	AM128682	Wafers, Polypropylene Bristle (Pack of 16)	See Parts
	AM128683	Wafers, Steel Bristle (Pack of 16)	See Parts
		Weights:	
	BM17972	50 Lb. Cast Iron Wheel Weight (1)	128.40
	BM17976	50 Lb. Wheel Weight, Rear Plastic (1) with Mounting Hardware	66.34
	BM17973	72 Lb. Cast Iron Starter Wheel Weight (1)	181.90
	BM20715	Ballast Box (Click-N-Go) (X400/X500 HDGT's, X700's) *Requires BM20714 Click-N-Go Bracket.*	283.56
	BM18101	Mounting Hardware (1) for Attaching 72 Lb. Starter Weight and (2) 50 Lb. Cast Iron Weights on 26 In. Tire	28.89
	BM18089	Mounting Hardware (1) for Attaching 72 Lb. Starter Weight on 26x12-12 Tire	21.40
	BM17977	Mounting Hardware (1) for Attaching Two 50 lb. Weights to 23 In., 24 In. or 26 In. Tires *Two Wheel Steer only.*	20.33
	BM18094	Mounting Hardware (1), for Attaching 1 Wheel Weight. 4-Wheel Steer Only.	21.40
	R66949	Quik-Tatch Weight, 42 Lb.	62.06
	BM20779	Rear Click-N-Go Weight Bracket (X400/X500 HDGT's, X700's) *Requires BM20714 Click-N-Go Bracket.*	156.21

60 In. Heavy-Duty Rotary Broom (For X400/X500 HDGT's, X700's, 1023E, 1025R, 1026R, 2305, 2025R, 2032R, 2320, 2520, 2720, 3120-3720, 2210, 4010 Thru 4400-4410 Tractors)

Continued

CODE	ATTACHMENT IDENTIFIER	DESCRIPTION	SUGGESTED LIST PRICE USD ($)
		ATTACHMENTS FOR FIELD CONVERSION Continued...	
	BM17964	Wheel Weight (Cast Iron, Front, 30 Lb. 8 In.)	101.66
	BM17978	Wheel Weight Mounting Hardware (1) for Attaching Front Wheel Weight	10.70

47 In. Quick-Hitch Two-Stage Snow Blower (X400/X500 HDGT's, X700's, 425-455, 1023E, 1025R, 1026R, 2210, 2305, 2025R, 2032R, 2320, 2520, 2720, 4010, 4100, 4110, 4115 Tractors)

Equipment for Base Machine

Hydraulic Discharge Chute Rotation 100 Degrees Right and Left
47 In. Clearing Width "Straight"
15.5 In. Diameter Impeller
16 In. Diameter Auger
Shear Bolt Protection
Adjustable Spout Cap Deflector
Two-Stage Design
Wear Plates
Reversible and Replaceable Scraper Blade
Four Extra Shear Bolts
"Shell Mounted"
Hydraulic Chute Angling
Less Front Quick-Hitch
Less Front PTO
Less Implement Drive and Upstop

CODE	ATTACHMENT IDENTIFIER	DESCRIPTION	SUGGESTED LIST PRICE USD ($)
		Select One Code From Each Required Category	
		BASE MACHINE	
		F.O.B. Davenport, Iowa	
1473M		47 In. Quick-Hitch Two-Stage Snow Blower (X400/X500 HDGT's, X700's, 425-455, 1023E, 1025R, 1026R, 2210, 2305, 2025R, 2032R, 2320, 2520, 2720, 4010, 4100, 4110, 4115 Tractors) *BM20761 Hydraulic Coupler Kit Required on X700, X465, X475 and 425 Tractors.* *Compact Tractors Require Dual Selective Control Valve and Front Attaching Support Kit. See Sales Maual for Front Attaching Support Requirements.* *See Sales Manual for Ballast requirements.*	2,130.00
		FRONT QUICK-HITCH	
2000		Front Quick-Hitch and Hydraulic Lift (425, 445, 455)	625.00
2005		Front Quick-Hitch and Hydraulic Lift (For X400/X500 HDGT's, X700's)	603.00
2006		Front Quick-Hitch and Hydraulic Lift (2210, 2305)	641.00
2007		Front Qiuck-Hitch and Hydraulic Lift (2025R, 2032R, 2320, 2520, 2720, 4010, 4100, 4110, 4115)	688.00
2008		Front Quick-Hitch and Hydraulic Lift (1023E, 1025R, 1026R) *Also requires LVB26046, Front Attaching Support (1023E, 1025R, 1026R).*	688.00
2010		Less Front Quick-Hitch	In Base Price
		2000 RPM FRONT PTO KIT	
3000		2000 RPM Front PTO (425, 445, 455)	231.00
3003		2000 RPM Front PTO (4100, 4110)	254.00
3004		2WD 2000 RPM Front PTO (X400 HDGT's, X700, X720, X724, X740, X744, X710, X730, X734, X750, X754)	231.00
3005		4WD 2000 RPM Front PTO (X500 HDGT's, X728, X729, X748, X749)	245.00

47 In. Quick-Hitch Two-Stage Snow Blower (X400/X500 HDGT's, X700's, 425-455, 1023E, 1025R, 1026R, 2210, 2305, 2025R, 2032R, 2320, 2520, 2720, 4010, 4100, 4110, 4115 Tractors)

Continued

CODE	ATTACHMENT IDENTIFIER	DESCRIPTION	SUGGESTED LIST PRICE USD ($)
		2000 RPM FRONT PTO KIT Continued...	
3006		2000 RPM Front PTO (4010, 4115)	254.00
3007		2000 RPM Front PTO (2210, 2305)	268.00
3008		2000 RPM Front PTO Kit (2025R, 2320)	249.00
3009		2000 RPM Front PTO (2032R, 2520, 2720)	249.00
3010		Less Power Take Off	In Base Price
3012		2000 RPM Front PTO (1023E, 1025R, 1026R)	322.00
		IMPLEMENT DRIVE AND UPSTOP	
4000		Implement Drive and Upstop (425, 445, 455)	217.00
4003		Implement Drive and Upstop (For X400/X500 HDGT's, X700's)	217.00
4005		Implement Drive and Upstop (2025R, 2032R, 2320, 2520, 2720, 4010, 4100, 4110, 4115)	362.00
4006		Implement Drive and Upstop (2210, 2305)	413.00
4007		Implement Drive and Upstop (1023E, 1025R, 1026R)	413.00
4010		Less Implement Drive and Upstop	In Base Price
		ATTACHMENTS FOR FIELD CONVERSION	
		Front Hitch:	
	LVB26047	Front Quick-Hitch and Hydraulic Lift (1023E, 1025R, 1026R)	788.59
	LVB24898	Front Quick-Hitch and Hydraulic Lift (2025R, 2032R, 2320 - 2720) *Fits also 4010, 4100, 4110 and 4115 Tractors for 47SB only.*	788.59
	BM20921	Front Quick-Hitch and Hydraulic Lift (2305) *Fits also 2210 Tractors (for 47SB only).*	736.16
	BM17347	Front Quick-Hitch and Hydraulic Lift (415, 425, 445, 455)	715.83
	BM19782	Front Quick-Hitch and Hydraulic Lift (X400/X500 HDGT's, X700's)	692.29
		Front PTO:	
	BLV10051	2000 RPM Front PTO (1023E, 1025R, 1026R)	369.16
	LVB24801	2000 RPM Front PTO (2025R, 2032R, 2520, 2720, 3120-3720)	285.69
	LVB24900	2000 RPM Front PTO (2025R, 2320)	285.69
	LVB25966	2000 RPM Front PTO (2210, 2305)	306.01
	BM18695	2000 RPM Front PTO (4100, 4110)	291.04

47 In. Quick-Hitch Two-Stage Snow Blower (X400/X500 HDGT's, X700's, 425-455, 1023E, 1025R, 1026R, 2210, 2305, 2025R, 2032R, 2320, 2520, 2720, 4010, 4100, 4110, 4115 Tractors)

Continued

CODE	ATTACHMENT IDENTIFIER	DESCRIPTION	SUGGESTED LIST PRICE USD ($)
		ATTACHMENTS FOR FIELD CONVERSION Continued...	
	BM17330	2000 RPM Front PTO (415, 425, 445, 455) *European Region II 455 Requires BM17861.*	264.29
	LVB25305	2000 RPM Front PTO Kit (4010, 4115)	291.04
	BM24361	2000 RPM Mid-to-Front PTO Kit, 2WD (X400 HDGT's, X700's) *For Homologation Tractors, also Order BM20966 Front PTO Shield. Required to Meet Homologation Standards. Not Required for CE.*	298.53
	BM20991	2000 RPM Mid-to-Front PTO Kit, 2WD (X400 HDGT's, X700, X720, X724, X740, X744) *For Homologation Tractors, also Order BM20966 Front PTO Shield. Required to Meet Homologation Standards. Not Required for CE.*	264.29
	BM24362	4WD 2000 RPM Front PTO (X500 HDGT's, X700's) *For European RII Homologation Tractors, also Order BM20978 Front PTO Shield. Required to Meet Homologation Standards. Not Required for CE.*	298.53
	BM22560	4WD 2000 RPM Front PTO (X500 HDGT's, X728, X729, X748, X749) *For European RII Homologation Tractors, also Order BM20978 Front PTO Shield. Required to Meet Homologation Standards. Not Required for CE.*	281.41
		Hydraulics:	
	BM20761	Hydraulic Coupler Kit *Required on X700, X465, X475 and 425 Tractors.*	54.57
	BM20896	Hydraulic Retro Kit *Required to fit a Customer's 425, 445 and 455 Snow Blower or Snow Thrower on a New X400/X500 HDGT or X700 Series Tractor.*	28.89
		Miscellaneous:	
	BM20714	Click-N-Go Bracket (X400/X500 HDGT's, X700's)	112.36
	M88984	Drift Blade	See Parts
	LVB25302	Front Attaching Support Kit *For 2520, 2720, 4100, 4110, 4115 Tractors. See Sales Manual for Front Attaching Support Requirements.*	59.91
	LVB26046	Front Attaching Support Kit (1023E, 1025R, 1026R) *See Sales Manual for Front Attaching Support Requirements.*	67.41
	LVB24895	Front Attaching Support Kit (2025R, 2320) *2025R, 2320 Tractors with 200X or 200CX Hood Guard Require Attaching Support Kit.*	82.39
	LVB25396	Front Attaching Support Kit (2305) *Fits also 2210 Tractors (for 47SB only.) See Sales Manual for Front Attaching Support Requirements.*	59.91
	LVB24899	Front Hitch/Mid-Mount Mower Combo Bracket (2025R, 2032R, 2320-2720) *Compatible with 4115 Tractor also. Required for Tool Free Change Between 54D or 62D OnRamp Mid-Mount Mower and Quik-Tatch Front Hitch (2025R, 2032R, 2320, 2520, 2720, 4115).*	127.33

47 In. Quick-Hitch Two-Stage Snow Blower (X400/X500 HDGT's, X700's, 425-455, 1023E, 1025R, 1026R, 2210, 2305, 2025R, 2032R, 2320, 2520, 2720, 4010, 4100, 4110, 4115 Tractors)

Continued

CODE	ATTACHMENT IDENTIFIER	DESCRIPTION	SUGGESTED LIST PRICE USD ($)
		ATTACHMENTS FOR FIELD CONVERSION Continued...	
	BM20753	Front Light Kit *For X400/X500 HDGT and X700 Series Garden Tractors.*	207.59
	AM119321	Heavy Duty Skid Shoe (1) *For Snow Blowers Serial Numbered up to 060000.*	See Parts
	LVB26135	Implement Drive and Upstop (1023E, 1025R, 1026R, 2210, 2305)	475.09
	LVB24902	Implement Drive and Upstop (2025R, 2032R, 2320, 2520, 2720) *Fits also 4010, 4100, 4110 and 4115 Tractors (for 47SB only).*	415.16
	BM20871	Implement Drive and Upstop (425, 445, 455, F900's)	249.31
	BM23236	Implement Drive and Upstop (X400/X500 HDGT's, X700's)	249.31
	AM128337	Left-Side Skid Shoe Plate and Hardware	See Parts
	BM20960	Remote Spout Cap Control Kit *For 425-455, 318, 322, 332, 420, 430, X400/X500 HDGT's, F900's, X700's, 2210, 2305, 4010, 4100, 4110, 4115 Tractors. See Sales Manual for Required Attaching Parts.*	124.11
	LVB24958	Remote Spout Cap Control Kit *For 2025R, 2032R, 2320, 2520, 2720 Tractors. See Sales Manual for Required Attaching Parts.*	146.59
	LVB26213	Remote Spout Cap Control Kit *For 1023E, 1025R and 1026R Tractors. See Sales Manual for Required Attaching Parts.*	197.96
	AM128336	Right-Side Skid Shoe Plate and Hardware	See Parts
	M157831	Skid shoe, Plastic (1) *For 44-, 47-, and 54-in. Snow Blowers. Two required.*	See Parts
	TY15956	Tire Chains (Pair) for 23x10.50-12 In. Drive Tires *All Wheel Steer Tractors with Standard 23x10.50-12 In. Tires Require BM18021 Wheel Spacer Kit to Provide Clearance Between Tire Chains and Steering Linkage.*	See Parts
	TY15845	Tire Chains (Pair) for 23x10.50-12 In. Rear Tires (318, 322, 332)	See Parts
	TY15841	Tire Chains (Pair) for 23x8.50-12 In. Drive Tires *Compatible on all Wheel Steer Tractors with BM17332 Tires.*	See Parts
	BM22725	Wheel Spacer Kit *For all Wheel Steer Tractors when Installing TY15956 Chains.*	157.29
		Seats / Wheels / Tires:	
	TY15958	Tire Chains (Pair) for 26x12-12 Tires	See Parts
		Weights:	
	BM20715	Ballast Box (Click-N-Go) (X400/X500 HDGT's, X700's) *Requires BM20714 Click-N-Go Bracket.*	283.56
	R66949	Quik-Tatch Weight, 42 Lb.	62.06

47 In. Quick-Hitch Two-Stage Snow Blower (X400/X500 HDGT's, X700's, 425-455, 1023E, 1025R, 1026R, 2210, 2305, 2025R, 2032R, 2320, 2520, 2720, 4010, 4100, 4110, 4115 Tractors)

Continued

CODE	ATTACHMENT IDENTIFIER	DESCRIPTION	SUGGESTED LIST PRICE USD ($)
		ATTACHMENTS FOR FIELD CONVERSION Continued...	
	BM20779	Rear Click-N-Go Weight Bracket (X400/X500 HDGT's, X700's) *Requires BM20714 Click-N-Go Bracket.*	156.21

54 In. Quick-Hitch Two-Stage Snow Blower (X400/X500 HDGT's, X700's, 1023E, 1025R, 1026R, 2305, 2025R, 2032R, 2320-2720 Tractors)

Equipment for Base Machine

Hydraulic Discharge Chute
Rotation 100 Degrees Right and Left
54 In. Clearing Width "Straight"
15 In. Diameter Impeller
16 In. Diameter Auger
Shear Bolt Protection
Adjustable Spout Cap Deflector
Two-Stage Design
Wear Plates
Reversible and Replaceable Scraper Blade
Four Extra Shear Bolts "Shell Mounted"
Hydraulic Chute Angling
Less Front Quick-Hitch
Less Front PTO
Less Implement Drive and Upstop

CODE	ATTACHMENT IDENTIFIER	DESCRIPTION	SUGGESTED LIST PRICE USD ($)
		Select One Code From Each Required Category	
		BASE MACHINE	
		F.O.B. Davenport, Iowa	
02C1M		54 In. Quick-Hitch Two-Stage Snow Blower (X400/X500 HDGT's, X700's, 1023E, 1025R, 1026R, 2305, 2025R, 2032R, 2320-2720 Tractors) *BM20761 Hydraulic Coupler Kit Required on X700 Tractors.* *Compact Tractors Require Dual Selective Control Valve and Front Attaching Support Kit. See Sales Maual for Front Attaching Support Requirements.* *See Sales Manual for Ballast requirements.*	2,550.00
		FRONT QUICK-HITCH	
2005		Front Quick-Hitch and Hydraulic Lift (For X400/X500 HDGT's, X700's)	603.00
2006		Front Quick-Hitch and Hydraulic Lift (2305)	641.00
2007		Front Quick-Hitch and Hydraulic Lift (2025R, 2032R, 2320-2720)	688.00
2008		Front Quick-Hitch and Hydraulic Lift (1023E, 1025R, 1026R) *Also requires LVB26046, Front Attaching Support (1023E, 1025R, 1026R).*	688.00
2010		Less Front Quick-Hitch	In Base Price
		2000 RPM FRONT PTO KIT	
3004		2WD 2000 RPM Front PTO (X400 HDGT's, X700, X720, X724, X740, X744)	231.00
3005		4WD 2000 RPM Front PTO (X500 HDGT's, X728, X729, X748, X749)	245.00
3007		2000 RPM Front PTO (2305)	268.00
3008		2000 RPM Front PTO Kit (2025R, 2320)	249.00
3009		2000 RPM Front PTO (2032R, 2520, 2720)	249.00
3010		Less Power Take Off	In Base Price

54 In. Quick-Hitch Two-Stage Snow Blower (X400/X500 HDGT's, X700's, 1023E, 1025R, 1026R, 2305, 2025R, 2032R, 2320-2720 Tractors)

Continued

CODE	ATTACHMENT IDENTIFIER	DESCRIPTION	SUGGESTED LIST PRICE USD ($)
		2000 RPM FRONT PTO KIT Continued...	
3012		2000 RPM Front PTO (1023E, 1025R, 1026R)	322.00
		IMPLEMENT DRIVE AND UPSTOP	
4003		Implement Drive and Upstop (For X400/X500 HDGT's, X700's)	217.00
4005		Implement Drive and Upstop (2025R, 2032R, 2320-2720)	282.00
4006		Implement Drive and Upstop (2305)	413.00
4007		Implement Drive and Upstop (1023E, 1025R, 1026R)	413.00
4010		Less Implement Drive and Upstop	In Base Price
		ATTACHMENTS FOR FIELD CONVERSION	
		Front Hitch:	
	LVB26047	Front Quick-Hitch and Hydraulic Lift (1023E, 1025R, 1026R)	788.59
	LVB24898	Front Quick-Hitch and Hydraulic Lift (2025R, 2032R, 2320 - 2720)	788.59
	BM20921	Front Quick-Hitch and Hydraulic Lift (2305)	736.16
	BM19782	Front Quick-Hitch and Hydraulic Lift (X400/X500 HDGT's, X700's)	692.29
		Front PTO:	
	BLV10051	2000 RPM Front PTO (1023E, 1025R, 1026R)	369.16
	LVB24801	2000 RPM Front PTO (2025R, 2032R, 2520, 2720, 3120-3720)	285.69
	LVB24900	2000 RPM Front PTO (2025R, 2320)	285.69
	LVB25966	2000 RPM Front PTO (2210, 2305)	306.01
	BM24361	2000 RPM Mid-to-Front PTO Kit, 2WD (X400 HDGT's, X700's) *For Homologation Tractors, also Order BM20966 Front PTO Shield. Required to Meet Homologation Standards. Not Required for CE.*	298.53
	BM20991	2000 RPM Mid-to-Front PTO Kit, 2WD (X400 HDGT's, X700, X720, X724, X740, X744) *For Homologation Tractors, also Order BM20966 Front PTO Shield. Required to Meet Homologation Standards. Not Required for CE.*	264.29
	BM24362	4WD 2000 RPM Front PTO (X500 HDGT's, X700's) *For European RII Homologation Tractors, also Order BM20978 Front PTO Shield. Required to Meet Homologation Standards. Not Required for CE.*	298.53
	BM22560	4WD 2000 RPM Front PTO (X500 HDGT's, X728, X729, X748, X749) *For European RII Homologation Tractors, also Order BM20978 Front PTO Shield. Required to Meet Homologation Standards. Not Required for CE.*	281.41
		Hydraulics:	
	BM20761	Hydraulic Coupler Kit *Required on X700, X465, X475 and 425 Tractors.*	54.57

54 In. Quick-Hitch Two-Stage Snow Blower (X400/X500 HDGT's, X700's, 1023E, 1025R, 1026R, 2305, 2025R, 2032R, 2320-2720 Tractors)

Continued

CODE	ATTACHMENT IDENTIFIER	DESCRIPTION	SUGGESTED LIST PRICE USD ($)
		ATTACHMENTS FOR FIELD CONVERSION Continued...	
		Miscellaneous:	
	BM20714	Click-N-Go Bracket (X400/X500 HDGT's, X700's)	112.36
	M88984	Drift Blade	See Parts
	LVB25302	Front Attaching Support Kit *For 2520, 2720 Tractors. See Sales Manual for Front Attaching Support Requirements.*	59.91
	LVB26046	Front Attaching Support Kit (1023E, 1025R, 1026R) *See Sales Manual for Front Attaching Support Requirements.*	67.41
	LVB24895	Front Attaching Support Kit (2025R, 2320) *2025R, 2320 Tractors with 200X or 200CX Hood Guard Require Attaching Support Kit.*	82.39
	LVB25396	Front Attaching Support Kit (2305) *Fits also 2210 Tractors (for 47SB only.) See Sales Manual for Front Attaching Support Requirements.*	59.91
	LVB24899	Front Hitch/Mid-Mount Mower Combo Bracket (2025R, 2032R, 2320-2720) *Compatible with 4115 Tractor also. Required for Tool Free Change Between 54D or 62D OnRamp Mid-Mount Mower and Quik-Tatch Front Hitch (2025R, 2032R, 2320, 2520, 2720, 4115).*	127.33
	BM20753	Front Light Kit *For X400/X500 HDGT and X700 Series Garden Tractors.*	207.59
	LVB26135	Implement Drive and Upstop (1023E, 1025R, 1026R, 2210, 2305)	475.09
	BM23238	Implement Drive and Upstop (2025R, 2032R, 2320, 2520, 2720)	324.21
	BM23236	Implement Drive and Upstop (X400/X500 HDGT's, X700's)	249.31
	BM20960	Remote Spout Cap Control Kit *For 425-455, 318, 322, 332, 420, 430, X400/X500 HDGT's, F900's, X700's, 2210, 2305, 4010, 4100, 4110, 4115 Tractors. See Sales Manual for Required Attaching Parts.*	124.11
	LVB24958	Remote Spout Cap Control Kit *For 2025R, 2032R, 2320, 2520, 2720 Tractors. See Sales Manual for Required Attaching Parts.*	146.59
	LVB26213	Remote Spout Cap Control Kit *For 1023E, 1025R and 1026R Tractors. See Sales Manual for Required Attaching Parts.*	197.96
	M157831	Skid shoe, Plastic (1) *For 44-, 47-, and 54-in. Snow Blowers. Two required.*	See Parts
	BM22725	Wheel Spacer Kit *For all Wheel Steer Tractors when Installing TY15956 Chains.*	157.29
		Seats / Wheels / Tires:	
	TY15958	Tire Chains (Pair) for 26x12-12 Tires	See Parts
		Weights:	
	BM20715	Ballast Box (Click-N-Go) (X400/X500 HDGT's, X700's) *Requires BM20714 Click-N-Go Bracket.*	283.56

54 In. Quick-Hitch Two-Stage Snow Blower (X400/X500 HDGT's, X700's, 1023E, 1025R, 1026R, 2305, 2025R, 2032R, 2320-2720 Tractors)

Continued

CODE	ATTACHMENT IDENTIFIER	DESCRIPTION	SUGGESTED LIST PRICE USD ($)
		ATTACHMENTS FOR FIELD CONVERSION Continued...	
	R66949	Quik-Tatch Weight, 42 Lb.	62.06
	BM20779	Rear Click-N-Go Weight Bracket (X400/X500 HDGT's, X700's) *Requires BM20714 Click-N-Go Bracket.*	156.21

59 In. Two-Stage Snow Blower (For 3120-3720, 3005, 790, 855, 955, 670, 770, 4200-4400, 4210-4410 Tractors)

Equipment for Base Machine

Hydraulic Discharge Chute Rotation 100 Degrees Right and Left
59 In. Clearing Width "Straight"
16 In. Diameter Impeller
16 In. Diameter Auger
Shear Bolt Protection
Adjustable Spout Cap Deflector
Two-Stage Design
Wear Plates
Reversible and Replaceable Scraper Blade
Hydraulic Chute Angling
Less Front Hitch
Less Front PTO
Less Mounting Kit and Less Snow Blower Driveshaft

CODE	ATTACHMENT IDENTIFIER	DESCRIPTION	SUGGESTED LIST PRICE USD ($)
		Select One Code From Each Required Category	
		BASE MACHINE	
		F.O.B. Davenport, Iowa	
2758M		59 In. Two-Stage Snow Blower (For 3120-3720, 3005, 790, 855, 955, 670, 770, 4200-4400, 4210-4410 Tractors) *Availability Limited to Dealer Inventory of BM16855 for 670, 770, 790, 3005.* *Tractors Require Dual SCV, Mid PTO and Rear Wheel Ballasting.* *3120-3720 Tractors with Mid-Mount Mowers Require LVB24810 For Use with Front Three-Point Hitch with A-Frame. Current 59 In. Snow Blowers Ordered for 4200-4400 or 4210-4410 Tractors can be Converted to Work with 3120-3720 Tractors by Using the Following Bundle Numbers: LVB24815, LVB24801, LVB25741, LVB24800.*	4,050.00
		SNOW BLOWER MOUNTING KIT / DRIVESHAFT	
1000		Snow Blower Mounting Kit and Driveshaft (3005, 855, 955, 670, 770, 790, 4200-4400, 4210-4410)	597.00
1005		Snow Blower Mounting Kit and Driveshaft (3120-3720)	307.00
1010		Less Snow Blower Mounting Kit and Driveshaft	In Base Price
		FRONT HITCH	
		55 Series, 70 Series, 790 and 3005 Require Additional Service Parts, See Sales Manual.	
2000		Front Quick-Hitch and Hydraulic Lift (4210-4410)	725.00
2001		Front Quick-Hitch and Hydraulic Lift (4200-4400) *Availability Limited to Dealer Inventory.*	725.00
2002		Front Quick-Hitch and Hydraulic Lift (670, 770, 790, 3005) *Availability limited to dealer inventory.*	605.00
2004		Front Quick-Hitch and Hydraulic Lift (855, 955) *Availability Limited to Dealer Inventory.* *Components available through Service Parts.*	623.00
2005		Front Three-Point Hitch with A-Frame Quick Attach System (3120-3720)	1,224.00

59 In. Two-Stage Snow Blower (For 3120-3720, 3005, 790, 855, 955, 670, 770, 4200-4400, 4210-4410 Tractors)

Continued

CODE	ATTACHMENT IDENTIFIER	DESCRIPTION	SUGGESTED LIST PRICE USD ($)
		FRONT HITCH Continued...	
2010		Less Front Quick-Hitch and Less Hydraulic Lift	In Base Price
		FRONT PTO	
3000		2000 RPM Front PTO (4200-4400, 4210-4410)	213.00
3002		2000 RPM Front PTO (670)	370.00
3003		2000 RPM Front PTO (770, 790, 3005)	381.00
3004		2000 RPM Front PTO (855, 955)	347.00
3005		2000 RPM Front PTO (3120-3720)	249.00
3010		Less 2000 RPM Front PTO	In Base Price
		ATTACHMENTS FOR FIELD CONVERSION	
		Front Hitch:	
	LVB24797	A-Frame Quick Attach System (3120-3720)	190.46
	LVB25306	Front Quick-Hitch and Hydraulic Lift (4210-4410)	830.31
	LVB25878	Front Three-Point Hitch (3120-3720)	1,248.69
	LVB24815	Front Three-Point Hitch with A-Frame Quick Attach System (3120-3720) *Consists of (1) LVB24797, (1) LVB25759, (1) LVB25878.*	See Parts
		Front PTO:	
	LVB24801	2000 RPM Front PTO (2025R, 2032R, 2520, 2720, 3120-3720)	285.69
	BM19576	2000 RPM Front PTO (4200-4400, 4210-4410)	245.03
	BM16856	2000 RPM Front PTO (670)	424.79
	BM21379	2000 RPM Front PTO (770, 790, 3005)	436.56
	BM16494	2000 RPM Front PTO (855, 955)	399.11
	LVB25759	Front PTO Bracket (3120-3720)	82.39
		Miscellaneous:	
	LVB24810	Front Three-Point Hitch/Mid Mount Mower Draft Arms	228.99
	AM128337	Left-Side Skid Shoe Plate and Hardware	See Parts
	AM128336	Right-Side Skid Shoe Plate and Hardware	See Parts
	LVB24800	Snow Blower Drive Shaft (3120-3720)	153.01
	LVB25741	Snow Blower Mounting Kit (3120-3720) *Requires Snow Blower Driveshaft LVB24800.*	203.30

59 In. Two-Stage Snow Blower (For 3120-3720, 3005, 790, 855, 955, 670, 770, 4200-4400, 4210-4410 Tractors)

Continued

CODE	ATTACHMENT IDENTIFIER	DESCRIPTION	SUGGESTED LIST PRICE USD ($)
		ATTACHMENTS FOR FIELD CONVERSION Continued...	
	BM21660	Snow Blower Mounting Kit and Driveshaft (3005, 855, 955, 670, 770, 790, 3005, 4200-4400, 4210-4410)	683.73

647 Rotary Tiller

Equipment for Base Machine

48 In. Tilling Width
540 PTO Shaft Drive with "Quick Lock" Collar
Pre-set Slip Clutch
15-35 PTO HP Rated Main Gearbox
Breather on Gearbox and Chain Case
Dipstick on Gearbox
Sight Glass on Chain Case
7 In. Tilling Depth
14 In. Rotor Diameter
6 Hybrid Tines per Flange
6 Flanges - Total of 36 Tines
4 Position Adjustable Skidshoes
ASA 60 Roller Chain
Parking Stands
Adjustable Rear Hinged Cover Door
Center Mounted Cat 1 Hitch
iMatch & Alpha Compatible 3-Point Hitch
Drive Shaft (CUT Tractors)

CODE	ATTACHMENT IDENTIFIER	DESCRIPTION	SUGGESTED LIST PRICE USD ($)
		Select One Code From Each Required Category	
		BASE MACHINE	
		F.O.B. Davenport, Iowa	
0205LV		647 Rotary Tiller *For X400/X500 HDGT, X700 Series, 3005, 4005, 1023E, 1025R, 1026R, 3032E, 3038E, 2210, 4010, 4100, 4110, 4115, 2305, 2025R, 2032R, 2320-2720, 3203, 3120-3720, 4105 Tractors. X400/X500HDGT and X700 Series Tractors Must be Equipped with 540 RPM Rear PTO Drive and Category 1 3-Point Hitch. Front Ballast is Required, See Sales Manual for Specific Requirements. If Ordering Tiller for Use with iMatch AutoHitch, Order Code 1010 (Less Drive Shaft) as the AutoHitch Implement Side Components are Used in Place of the Tiller Drive Shaft.*	2,395.00
		DRIVE SHAFT	
1000		Drive Shaft for Compact Utility Tractors	In Base Price
1001		Drive Shaft for X400/X500 HDGT and X700 Series Tractors	30.00
1010		Less Drive Shaft	-310.00
		BRACKETS	
2000		Brackets for Compact Utility Tractors	In Base Price
2001		Brackets for X400/X500 HDGT and X700 Series Tractors	Same Price
2010		Less Brackets	-138.00
		ATTACHMENTS - ORDER AS DESIRED	
		Spanish North American Kit:	
9430		Spanish North American Operator's Manual and Decal Kit	No Charge
		ATTACHMENTS FOR FIELD CONVERSION	
		Miscellaneous:	
	BM21914	540 RPM Rear PTO Drive (X400/X500 HDGTs, X700's -June 2010 production) *Also order AM120840 Module for MY2005 and older X400 or X500 HDGTs.*	960.86

647 Rotary Tiller
Continued

CODE	ATTACHMENT IDENTIFIER	DESCRIPTION	SUGGESTED LIST PRICE USD ($)
		ATTACHMENTS FOR FIELD CONVERSION Continued...	
	LVB25769	Brackets for Compact Utility Tractors	158.36
	LVB25770	Brackets for X400/X500 HDGT and X700 Series Tractors	158.36
	LVB25518	Drive Shaft Kit (CUTS)	355.24
	LVB25545	Drive Shaft Kit (X400/X500 HDGT's, X700's)	389.49
		Spanish North American Kit:	
	BLV10081	Spanish North American Operator's Manual and Decal Kit	166.91
		Weights:	
	BM20957	9-Weight Front Weight Bracket *For X400/X500 HDGT's, X700, X720, X724, X728, X729, X740, X744, X748, X749.*	188.31
	BM24363	9-Weight Front Weight Bracket *For X400/X500 HDGT's, X700's*	188.31
	LVBM19607	Front Quik-Tatch Weight Kit (3020 Series, 3203, 4105) *Includes Rod and Spring Pins for Front Quik-Tatch Weights.*	46.20
	CH14083	Front Quik-Tatch Weight Kit (990, 4005) *Includes Rod and Spring Pins for Front Quik-Tatch Weights.*	See Parts
	LVB25363	Front Weight Bracket Extension Kit (1023E, 1025R, 1026R, 2305, 2025R, 2320, 2520) *Includes Extension Bracket and Hardware (Including Rod and Spring Pins).*	210.10
	LVBM19581	Front Weight Bracket Extension Kit (3203, 3020 Series, 4105) *Includes Extension Bracket and All Hardware (Including Rod and Spring Pins) to Hold up to Ten Front Quik-Tatch Weights.*	238.70
	BM17998	Front Weight Bracket Extension Kit (790, 3005) *Includes Extension Bracket and Hardware (Including Rod and Spring Pins) to Hold up to Four Quik-Tatch Weights.*	233.20
	R66949	Quik-Tatch Weight, 42 Lb. *For X400/X500 HDGT's and X700 Series also order M147986 Retaining Rod and Two M40461 Spring Clips. For 2210, 2305, 2025R, 2032R, 2320, 2520, 2720, 4010, 4100, 4110, and 4115 also order M128726 Retaining Rod and Four A15147 Spring Clips.*	62.06

655 Rotary Tiller

Equipment for Base Machine

55 In. Tilling Width
540 PTO Shaft Drive with "Quick Lock" Collar
Pre-set Slip Clutch
15-35 PTO HP Rated Main Gearbox
Breather on Gearbox and Chain Case
Dipstick on Gearbox
Sight Glass on Chain Case
7 In. Tilling Depth
15 In. Rotor Diameter
6 Hybrid Tines per Flange
7 Flanges - Total of 42 Tines
4 Position Adjustable Skidshoes
ASA 80 Roller Chain
Parking Stands
Adjustable Rear Hinged Cover Door
Center Mounted Cat 1 Hitch
iMatch Compatible 3-Point Hitch
PTO Drive Shaft

CODE	ATTACHMENT IDENTIFIER	DESCRIPTION	SUGGESTED LIST PRICE USD ($)
		Select One Code From Each Required Category	
		BASE MACHINE	
		F.O.B. Davenport, Iowa	
0215LV		655 Rotary Tiller *For 3005, 3032E, 3038E, 3203, 4005, 790, 990, 4100, 4110, 4115,2305, 2025R, 2032R, 2320-2720,4200-4400, 4210-4410, 3120-3720 and 4105 Tractors. Front Ballast is Required, See Sales Manual for Specific Requirements. If Ordering Tiller for Use with iMatch AutoHitch, Order Code 1010 (Less Drive Shaft) as the Auto Hitch Implement Side Components are Used in Place of the Tiller Drive Shaft.*	2,775.00
		DRIVE SHAFT	
1000		Drive Shaft	In Base Price
1010		Less Drive Shaft	-324.00
		ATTACHMENTS - ORDER AS DESIRED	
		Spanish North American Kit:	
9430		Spanish North American Operator's Manual and Decal Kit	No Charge
		ATTACHMENTS FOR FIELD CONVERSION	
		Miscellaneous:	
	LVB25625	Drive Shaft	371.29
		Spanish North American Kit:	
	BLV10081	Spanish North American Operator's Manual and Decal Kit	166.91
		Weights:	
	LVBM19607	Front Quik-Tatch Weight Kit (3020 Series, 3203, 4105) *Includes Rod and Spring Pins for Front Quik-Tatch Weights.*	46.20
	CH15318	Front Quik-Tatch Weight Kit (790, 3005) *Includes Rod and Spring Pins for Front Quik-Tatch Weights.*	See Parts
	CH14083	Front Quik-Tatch Weight Kit (990, 4005) *Includes Rod and Spring Pins for Front Quik-Tatch Weights.*	See Parts

655 Rotary Tiller
Continued

CODE	ATTACHMENT IDENTIFIER	DESCRIPTION	SUGGESTED LIST PRICE USD ($)
		ATTACHMENTS FOR FIELD CONVERSION Continued...	
	LVB25363	Front Weight Bracket Extension Kit (1023E, 1025R, 1026R, 2305, 2025R, 2320, 2520) *Includes Extension Bracket and Hardware (Including Rod and Spring Pins).*	210.10
	LVBM19581	Front Weight Bracket Extension Kit (3203, 3020 Series, 4105) *Includes Extension Bracket and All Hardware (Including Rod and Spring Pins) to Hold up to Ten Front Quik-Tatch Weights.*	238.70
	BM17998	Front Weight Bracket Extension Kit (790, 3005) *Includes Extension Bracket and Hardware (Including Rod and Spring Pins) to Hold up to Four Quik-Tatch Weights.*	233.20
	R66949	Quik-Tatch Weight, 42 Lb. *For X400/X500 HDGT's and X700 Series also order M147986 Retaining Rod and Two M40461 Spring Clips. For 2210, 2305, 2025R, 2032R, 2320, 2520, 2720, 4010, 4100, 4110, and 4115 also order M128726 Retaining Rod and Four A15147 Spring Clips.*	62.06
	BM19780	Quik-Tatch Weight, 70 lb.	108.90

665 Rotary Tiller

Equipment for Base Machine

65 In. Tilling Width
540 PTO Shaft Drive with "Quick Lock" Collar
Pre-set Slip Clutch
30-50 PTO HP Rated Main Gearbox
Breather on Gearbox and Chain Case
Dipstick on Gearbox
Sight Glass on Chain Case
7 In. Tilling Depth
16 In. Rotor Diameter
6 Hybrid Tines per Flange
8 Flanges - Total of 48 Tines
4 Position Adjustable Skidshoes
ASA 100 Roller Chain
Parking Stands
Adjustable Rear Hinged Cover Door
Center Mounted Cat 1 Hitch
iMatch Compatible 3-Point Hitch
PTO Drive Shaft

CODE	ATTACHMENT IDENTIFIER	DESCRIPTION	SUGGESTED LIST PRICE USD ($)

Select One Code From Each Required Category

BASE MACHINE

F.O.B. Davenport, Iowa

0225LV		665 Rotary Tiller *For 3038E, 4005, 790, 990, 4300-4700, 4310-4710, 3520, 3720, 4105 and 4120-4320 Tractors. Front Ballast is Required, See Sales Manual for Specific Requirements. If Ordering Tiller for Use with iMatch AutoHitch, Order Code 1010 (Less Drive Shaft) as the Auto Hitch Implement Side Components are Used in Place of the Tiller Drive Shaft.*	3,495.00

DRIVE SHAFT

1000		Drive Shaft	In Base Price
1010		Less Drive Shaft	-370.00

ATTACHMENTS - ORDER AS DESIRED

		Spanish North American Kit:	
9430		Spanish North American Operator's Manual and Decal Kit	No Charge

ATTACHMENTS FOR FIELD CONVERSION

		Miscellaneous:	
	LVB25626	Drive Shaft	424.79
		Spanish North American Kit:	
	BLV10081	Spanish North American Operator's Manual and Decal Kit	166.91
		Weights:	
	LVBM19607	Front Quik-Tatch Weight Kit (3020 Series, 3203, 4105) *Includes Rod and Spring Pins for Front Quik-Tatch Weights.*	46.20
	LVB25705	Front Quik-Tatch Weight Kit (4020 Series) *Includes Rod and Spring Pins for Front Quik-Tatch Weights.*	44.00
	CH15318	Front Quik-Tatch Weight Kit (790, 3005) *Includes Rod and Spring Pins for Front Quik-Tatch Weights.*	See Parts

665 Rotary Tiller
Continued

CODE	ATTACHMENT IDENTIFIER	DESCRIPTION	SUGGESTED LIST PRICE USD ($)
		ATTACHMENTS FOR FIELD CONVERSION Continued...	
	CH14083	Front Quik-Tatch Weight Kit (990, 4005) *Includes Rod and Spring Pins for Front Quik-Tatch Weights.*	See Parts
	LVBM19581	Front Weight Bracket Extension Kit (3203, 3020 Series, 4105) *Includes Extension Bracket and All Hardware (Including Rod and Spring Pins) to Hold up to Ten Front Quik-Tatch Weights.*	238.70
	LVBM19596	Front Weight Bracket Extension Kit (4020 Series) *Includes Extension Bracket and All Hardware (Including Rod and Spring Pins) to Hold up to Twelve Front Quik-Tatch Weights.*	255.20
	BM17998	Front Weight Bracket Extension Kit (790, 3005) *Includes Extension Bracket and Hardware (Including Rod and Spring Pins) to Hold up to Four Quik-Tatch Weights.*	233.20
	BM19780	Quik-Tatch Weight, 70 lb.	108.90

673 Rotary Tiller

Equipment for Base Machine

73 In. Tilling Width
540 PTO Shaft Drive with "Quick Lock" Collar
Pre-set Slip Clutch
30-50 PTO HP Rated Main Gearbox
Breather on Gearbox and Chain Case
Dipstick on Gearbox
Sight Glass on Chain Case
7 In. Tilling Depth
16 In. Rotor Diameter
6 Hybrid Tines per Flange
9 Flanges - Total of 54 Tines
4 Position Adjustable Skidshoes
ASA 100 Roller Chain
Parking Stands
Adjustable Rear Hinged Cover Door
Center Mounted Cat 1 Hitch
iMatch Compatible 3-Point Hitch
PTO Drive Shaft

CODE	ATTACHMENT IDENTIFIER	DESCRIPTION	SUGGESTED LIST PRICE USD ($)

Select One Code From Each Required Category

BASE MACHINE

F.O.B. Davenport, Iowa

0235LV		673 Rotary Tiller *For 4005, 990, 4500-4600, 3038E, 3520, 3720, 4510-4710, 4105, 4120, 4320 Tractors. Front Ballast is Required, See Sales Manual for Specific Requirements. If Ordering Tiller for Use with iMatch AutoHitch, Order Code 1010 (Less Drive Shaft) as the Auto Hitch Implement Side Components are Used in Place of the Tiller Drive Shaft.*	3,885.00

DRIVE SHAFT

1000		Drive Shaft	In Base Price
1010		Less Drive Shaft	-370.00

ATTACHMENTS - ORDER AS DESIRED

		Spanish North American Kit:	
9430		Spanish North American Operator's Manual and Decal Kit	No Charge

ATTACHMENTS FOR FIELD CONVERSION

		Miscellaneous:	
	LVB25626	Drive Shaft	424.79
		Spanish North American Kit:	
	BLV10081	Spanish North American Operator's Manual and Decal Kit	166.91
		Weights:	
	LVBM19607	Front Quik-Tatch Weight Kit (3020 Series, 3203, 4105) *Includes Rod and Spring Pins for Front Quik-Tatch Weights.*	46.20
	LVB25705	Front Quik-Tatch Weight Kit (4020 Series) *Includes Rod and Spring Pins for Front Quik-Tatch Weights.*	44.00
	CH14083	Front Quik-Tatch Weight Kit (990, 4005) *Includes Rod and Spring Pins for Front Quik-Tatch Weights.*	See Parts

673 Rotary Tiller
Continued

CODE	ATTACHMENT IDENTIFIER	DESCRIPTION	SUGGESTED LIST PRICE USD ($)
		ATTACHMENTS FOR FIELD CONVERSION Continued...	
	LVBM19581	Front Weight Bracket Extension Kit (3203, 3020 Series, 4105) *Includes Extension Bracket and All Hardware (Including Rod and Spring Pins) to Hold up to Ten Front Quik-Tatch Weights.*	238.70
	LVBM19596	Front Weight Bracket Extension Kit (4020 Series) *Includes Extension Bracket and All Hardware (Including Rod and Spring Pins) to Hold up to Twelve Front Quik-Tatch Weights.*	255.20
	BM19780	Quik-Tatch Weight, 70 lb.	108.90

681 Rotary Tiller

Equipment for Base Machine

81 In. Tilling Width
540 PTO Shaft Drive with "Quick Lock" Collar
Pre-set Slip Clutch
35-60 PTO HP Rated Main Gearbox
Breather on Gearbox and Chain Case
Dipstick on Gearbox
Sight Glass on Chain Case
8 In. Tilling Depth
18 In. Rotor Diameter
6 Hybrid Tines per Flange
8 Flanges - Total of 48 Tines
4 Position Adjustable Skidshoes
Gear Driveline
Parking Stands
Adjustable Rear Hinged Cover Door
Center Mounted Cat 1 Hitch
iMatch Compatible 3-Point Hitch
PTO Drive Shaft

CODE	ATTACHMENT IDENTIFIER	DESCRIPTION	SUGGESTED LIST PRICE USD ($)

Select One Code From Each Required Category

BASE MACHINE

F.O.B. Davenport, Iowa

0245LV		681 Rotary Tiller *For 4005, 990, 4500-4600, 4510-4710, 3720, 4120-4720 Tractors and 5000 Series Tractors. Front Ballast is Required, See Sales Manual for Specific Requirements. If Ordering Tiller for Use with iMatch AutoHitch, Order Code 1010 (Less Drive Shaft) as the AutoHitch Implement Side Components are Used in Place of the Tiller Drive Shaft.*	5,055.00

DRIVE SHAFT

1000		Drive Shaft	In Base Price
1010		Less Drive Shaft	-381.00

ATTACHMENTS - ORDER AS DESIRED

		Spanish North American Kit:	
9430		Spanish North American Operator's Manual and Decal Kit	No Charge

ATTACHMENTS FOR FIELD CONVERSION

		Miscellaneous:	
	LVB25627	Drive Shaft	436.56
		Spanish North American Kit:	
	BLV10081	Spanish North American Operator's Manual and Decal Kit	166.91
		Weights:	
	LVBM19607	Front Quik-Tatch Weight Kit (3020 Series, 3203, 4105) *Includes Rod and Spring Pins for Front Quik-Tatch Weights.*	46.20
	LVB25705	Front Quik-Tatch Weight Kit (4020 Series) *Includes Rod and Spring Pins for Front Quik-Tatch Weights.*	44.00
	CH14083	Front Quik-Tatch Weight Kit (990, 4005) *Includes Rod and Spring Pins for Front Quik-Tatch Weights.*	See Parts

681 Rotary Tiller
Continued

CODE	ATTACHMENT IDENTIFIER	DESCRIPTION	SUGGESTED LIST PRICE USD ($)
		ATTACHMENTS FOR FIELD CONVERSION Continued...	
	LVBM19581	Front Weight Bracket Extension Kit (3203, 3020 Series, 4105) *Includes Extension Bracket and All Hardware (Including Rod and Spring Pins) to Hold up to Ten Front Quik-Tatch Weights.*	238.70
	LVBM19596	Front Weight Bracket Extension Kit (4020 Series) *Includes Extension Bracket and All Hardware (Including Rod and Spring Pins) to Hold up to Twelve Front Quik-Tatch Weights.*	255.20
	BM19780	Quik-Tatch Weight, 70 lb.	108.90

Current Attachments for Non-Current Equipment for Compact Utility Tractors

CODE	ATTACHMENT IDENTIFIER	DESCRIPTION	SUGGESTED LIST PRICE USD ($)
		ATTACHMENTS FOR FIELD CONVERSION	
		Backhoe Adapter Frames:	
	LVB25614	Adapter Frame Weldment Plate (4120-4720 open station units manufactured before serial number 810001, or before MY 11', 4500-4700, 4510-4710)	901.00
		Miscellaneous:	
	BM16770	Attaching Parts (3005, 790)	583.00
	BM16571	Attaching Parts (790, 4010 thru 4400-4410, 3120-3720) *For 3-Bag Power Pak Material CollectionSystem (2710M)*	600.00
	LVB25405	PTO Shaft *For 550 Tiller.*	427.00
	LVB25406	PTO Shaft *For 660, 670 and 680 Tillers.*	443.00

RSX850i Green & Yellow

Equipment for Base Machine

ENGINE:
62 Engine HP*(839cc),
Electronic Fuel Injection (EFI)
Two Cylinder, Liquid-cooled,
Dual Overhead Cams,
4-Cycle Gasoline
Full Pressure, Dry Sump
w/ Reservoir Lubrication
System
Replaceable Single Dry-Type
Element Air Cleaner with
Remote Intake
7.4 Gallon (28L) Fuel
Capacity
Solid-state Ignition (12V)
Spark-arresting Muffler
ELECTRICAL:
Electric Start
38 Amp Alternator
340 CCA Battery
Four 27 Watt Halogen
Headlights
Brake and Tail Light
TRANSAXLE/TRANSMISSION:
Continuously Variable
Transmission
Full Clutch Enclosure
Two-speed Transaxle
Operator Selectable 4WD
53 mph (85 kph) Maximum
Forward Speed
On-demand True Four-Wheel
Drive System
Limited Slip; Lever Engagement
Front Differential
Traction Assist
Front and Rear Hydraulic Disk
Brakes
Foot Brake; Mechanical Disk
Actuation
Park Brake
Large Diameter half shafts
w/ TPE Boot Axles
STEERING/SUSPENSION:
Rack and Pinion Steering
Independant Front Suspension
Double A-arm w/ Coil Over Shock
& Anti-Sway Bar
(IRS) with 9 inches (229mm) of
travel
Independent Rear Suspension
Semi-trailing double A-arm
w/ Coil Over Shock & Anti-Sway
Bar (IRS) with 9 inches
(229mm) of travel
Standard 2" Rear Receiver
19.7 ft. Turning Radius
Ground Clearance: 10.5 In.
(267 mm)
Ground Clearance
(Under Foot Platform):
10.3 In (267 mm)
FRAME/STYLED PARTS:
Full, robotically welded frame
design
Side frame rails for rock
sliding
ROLL-OVER PROTECTIVE STRUCTURE
(ROPS):
1.75 In. (44.4 mm) Steel Tubular
Overhead Structure
Multiple Passenger Handholds
3-pt. Seat Belts
ISO 3471 & OSHA ROPS Certified
OPERATOR STATION:
Professional High-back Bucket
Seats; Tilt Forward
Adjustment on Driver's Seat
Glove Box
Storage Compartment Under Hood
Two Cup Holders
12v DC Outlet
Digital Instrument Cluster with
(Speed MPH, KPH, RPM, Fuel
Level, Hour meter, Odometer
w/ trip, Clock, Water Temp.,
4WD notice)
DIMENSIONS(WITH ROPS):
119 In. Long x 56.5 In.
Wide x 72 Inches High
PAYLOAD CAPACITY:
800 Lb (363 kg) Total Payload
Capacity which Includes:
200 Lb (91 kg) Driver,
200 Lb (91 kg) Passenger, and
400 Lb (181 kg) in Cargo Box
Towing Capacity:
1,200 Lb (544kg)
CARGO BOX:
32.3 In. Long x 47.6 In. Wide x
11.7 In. Deep
(820mm x 1209mm x 297mm)
8.9 cu. ft (.25 cu.m) Capacity
400 Lbs (181 kg) Box Capacity
Tilting Box; 2-sided Manual
Release
Hinged (Bottom) Tailgate
Steel Wheels
TIRES:
Front: 26x8-12 Ancla MT
(Mud Terrain Tires)
Rear: 26x10-12 Ancla MT
(Mud Terrain Tires)
SAFETY VIDEO TAPE:
Safety and Operational DVD
Operators Manual
*Engine HP is Provided by the
Engine Manufacturer to be Used
for Comparison Purposes Only,
Actual Operating HP will be
Less.

CODE	ATTACHMENT IDENTIFIER	DESCRIPTION	SUGGESTED LIST PRICE USD ($)

Select One Code From Each Required Category

BASE MACHINE

F.O.B. Janesville, Wisconsin

4760M	RSX850i Green & Yellow *Base Machine Suggested List Price Does Not Include 400 USD Destination Charge.*	12,999.00

DESTINATION

0202	US / CANADA	In Base Price
0230	Australia/New Zealand	Same Price
0195	Mexico	Same Price

RSX850i Green & Yellow
Continued

CODE	ATTACHMENT IDENTIFIER	DESCRIPTION	SUGGESTED LIST PRICE USD ($)
		DESTINATION Continued...	
0250		All Other Countries	Same Price
		WHEELS WITH TIRES (FOUR)	
1001		Yellow Steel Wheels Ancla M-T Extreme Terrain Tire	In Base Price
1007		Yellow Alloy Wheels Maxxis Bighorn Radial Tires	823.00
		DRIVER SEAT	
2000		21 In. Standard HB Seat -Yellow	In Base Price
2001		High Performance Sport Seat - Black	200.00
		PACKAGE	
5000		Protection Package *Package Consists of: Front Brushguard , OPS Black Poly Sport Roof, Cargo Box Rail.* *Must order 6010 option code when ordering 5000 option code.*	768.00
5010		Less Protection Package	In Base Price
		FRONT PROTECTION	
6000		Front Brush Guard	308.00
6001		PreRunner Bumper	308.00
6010		Less Front Brush Guard or PreRunner Bumper	In Base Price
		Attachments-Order as Desired	
		Spanish North American Kit:	
9435		Spanish North American Operator's Manual and Decal Kit	No Charge
		ATTACHMENTS FOR FIELD CONVERSION	
		Cabs/Roofs/Windshields:	
	BM23373	OPS Full No-Scratch Windshield	531.79
	BM23358	OPS Full Poly Windshield	362.73
	BM23376	OPS Glass Windshield w/ Wiper	714.76
	BM23375	OPS Half Poly Windshield	241.81
	BM23377	OPS Poly Cab *Consists of rear panel and doors. Requires OPS Poly Roof (NOT Sport) and Full Glass or Poly windshield to complete the cab.*	2,996.00
	BM23864	OPS Poly Rear Window	273.91
	BM23397	OPS Poly Roof - Black	329.56
	BM23399	OPS Poly Sport Roof - Black	329.56

RSX850i Green & Yellow
Continued

CODE	ATTACHMENT IDENTIFIER	DESCRIPTION	SUGGESTED LIST PRICE USD ($)
		ATTACHMENTS FOR FIELD CONVERSION Continued...	
	LP10314	OPS Side Mirror - Left *Available through Order Zone*	In Catalog
	LP10315	OPS Side Mirror - Right *Available through Order Zone*	In Catalog
	LP37046	OPS Soft Roof - Black *Available through Order Zone*	In Catalog
	LP37047	OPS Soft Roof - Camo *Available through Order Zone*	In Catalog
	BM24385	Replacement ROPS Kit RSX850i	426.93
		Cargo Box Options / Storage:	
	BM23849	5 Gallon Pail Holder	38.51
	BM23371	Box Mat	86.67
	BM23526	Cargo Box Rails	109.14
	BM23384	Cargo Box Wall Extensions	329.56
	BM24200	Glove Box Lock	12.84
	LP37044	OPS Overhead Organizer - Black *Available through Order Zone*	In Catalog
	LP37045	OPS Overhead Organizer - Camo *Available through Order Zone*	In Catalog
	LP25929	Rhino Grip XL - Double *Requires cargo box rails. Available through Order Zone.*	In Catalog
	LP25928	Rhino Grip XL - Single *Requires cargo box rails. Available through Order Zone.*	In Catalog
	BM23385	Tire Rack *Requires cargo box rails.*	231.76
		Carts / Hitches:	
	LPPCT10LXATV	10AT Cart *Available through Order Zone*	In Catalog
	LPPCT17ATJD	17AT Cart *Available through Order Zone.*	In Catalog
	BM23363	2" Front Receiver Hitch and Recovery Loops	109.14
	LPUT21JD	21 Steel Utility Cart *Available through Order Zone*	In Catalog
	PM05101	Ball Mount - 1.875 in. (48mm)	See Parts
	PM05201	Ball Mount - 2 in. (51mm)	See Parts
	BM22290	Drawbar - 2 in. (51mm)	38.51

RSX850i Green & Yellow
Continued

CODE	ATTACHMENT IDENTIFIER	DESCRIPTION	SUGGESTED LIST PRICE USD ($)
		ATTACHMENTS FOR FIELD CONVERSION Continued...	
		Custom & High Performance:	
	BM24356	Dual Battery Kit *Does not include the dual batteries for the kit, ordered seperately*	299.60
	BM23981	Fox 2.0 Performance Series Shocks	1,652.09
	BM22703	Seat-Belt Comfort Strap (2)	77.04
	BM23933	Sport Steering Wheel	196.89
	BM23379	Stereo and Speaker Kit *Includes mounting kit only; must choose one of the following three head units to have complete stereo:* *Radio, Heavy Duty AM / FM / WB / AUX (SWJHD1120)* *Radio, Heavy Duty AM / FM / WB / SAT / I-POD (SWJHD1620)* *Radio, AM / FM / WB / CD / AUX / SAT Ready (SWJHD3620)* *Must order head unit through Parts.*	660.19
		Lights / Signals:	
	BM24013	Beacon Light *Requires OPS Light Kit Switch Bank. Can be mounted to brake/tail light (no roof), or OPS poly roof if installed.*	219.36
	BM23442	Hella HID Sport Driving Lights *Requires OPS Light Kit Switch Bank for OPS or poly roof mounting, or PreRunner Bumper for bumper mounting.*	935.19
	BM24108	Hella Performance Spot Lights *Requires OPS Light Kit Switch Bank for OPS or poly roof mounting, or PreRunner Bumper for bumper mounting.*	343.47
	BM23370	Horn Kit	97.37
	BM24090	Long Range Light Kit *Requires OPS Light Kit Switch Bank for OPS or poly roof mounting, or PreRunner bumper for bumper mounting.*	191.53
	BM24016	Mid-Range Light Kit *Requires OPS Light Kit Switch Bank for OPS or poly roof mounting.*	123.06
	BM24089	OPS Switch Bank	67.41
		Protection:	
	BM23309	CV Guards *Aluminum*	142.31
	BM23368	Floor Mat	78.11
	BM23366	Front Brushguard	329.56
	BM23361	Nerf Bar	252.51
	BM23364	PreRunner Bumper	329.56
	BM23362	Rear Bumper	186.19
	BM23333	Underbody Armor *Aluminum*	296.39

RSX850i Green & Yellow
Continued

CODE	ATTACHMENT IDENTIFIER	DESCRIPTION	SUGGESTED LIST PRICE USD ($)
		ATTACHMENTS FOR FIELD CONVERSION Continued...	
	LP37036	Vehicle Cover - Black *Available through Order Zone*	In Catalog
	LP37037	Vehicle Cover - Camo *Available through Order Zone*	In Catalog
	LP37040	Vehicle Cover - Transportable (Black) *Available through Order Zone*	In Catalog
	LP37041	Vehicle Cover - Transportable (Camo) *Available through Order Zone*	In Catalog
		Sprayers / Pressure Washers:	
	LP39965	25 Gallon Bed Sprayer *Available through Order Zone*	In Catalog
	LP39964	45 Gallon Bed Sprayer *Available through Order Zone*	In Catalog
	LP39098	45 Gallon High Performance Bed Sprayer *Available through Order Zone*	In Catalog
	LP20485	45 Gallon Tow-Behind Sprayer *Available through Order Zone*	In Catalog
	LP22885	HP 150 in. Precision Boom	In Catalog
	LP39963	HP 45 Gallon Sprayer - Tow Behind *Available through Order Zone*	In Catalog
	LP22884	HP Boomless Nozzles	In Catalog
	LP22911	HP Standard Gator Boom	In Catalog
		Winch:	
	BM24437	Warn Winch (3000 lbs) *Requires 2 In. Front Receiver Hitch with Recovery Loops for mounting.*	770.40
	BM21392	Winch Accessories Kit	129.47
		SERVICE CONTRACTS - RESIDENTIAL OWNERS/USE	
		Visit http://www.JohnDeere.com/ServicePlans for more information on John Deere Service Contracts. May not be Available in Parts of the U.S., Not Available in Canada. Price may vary due to driving distance and/or time from machine to dealership location.	
		John Deere Extended Service Plan - 1-Year Option *1-year extended service plan. (6 months of extended service protection; 1-year of warranty transportation.)*	359.99
		John Deere Extended Service Plan - 2-Year Option *2-year extended service plan. (18 months of extended service protection; 2-years of warranty transportation.)*	799.99

RSX850i Trail Green & Yellow - PR

Equipment for Base Machine

ENGINE:
62 Engine HP*(839cc),
Electronic Fuel Injection (EFI)
Two Cylinder, Liquid-cooled,
Dual Overhead Cams,
4-Cycle Gasoline
Full Pressure, Dry Sump
w/ Reservoir Lubrication
System
Replaceable Single Dry-Type
Element Air Cleaner with
Remote Intake
7.4 Gallon (28L) Fuel
Capacity
Solid-state Ignition (12V)
Spark-arresting Muffler
ELECTRICAL:
Electric Start
38 Amp Alternator
340 CCA Battery
Four 27 Watt Halogen
Headlights
Brake and Tail Light
TRANSAXLE/TRANSMISSION:
Continuously Variable
Transmission
Full Clutch Enclosure
Two-speed Transaxle
Operator Selectable 4WD
53 mph (85 kph) Maximum
Forward Speed
On-demand True Four-Wheel
Drive System
Limited Slip; Lever Engagement
Front Differential
Traction Assist
Front and Rear Hydraulic Disk
Brakes
Foot Brake; Mechanical Disk
Actuation
Park Brake
Large Diameter half shafts
w/ TPE Boot Axles
STEERING/SUSPENSION:
Rack and Pinion Steering
Independant Front Suspension
Double A-arm w/ Coil Over Shock
& Anti-Sway Bar
(IRS) with 9 inches (229mm) of
travel
Independent Rear Suspension
Semi-trailing double A-arm
w/ Coil Over Shock & Anti-Sway
Bar (IRS) with 9 inches
(229mm)
of travel
Standard 2" Rear Receiver
19.7 ft. Turning Radius
Ground Clearance: 10.5 In.
(267 mm)
Ground Clearance
(Under Foot Platform):
10.3 In (267 mm)
FRAME/STYLED PARTS:
Full, robotically welded frame
design
Side frame rails for rock
sliding
ROLL-OVER PROTECTIVE STRUCTURE
(ROPS):
1.75 In. (44.4 mm) Steel Tubular
Overhead Structure
Multiple Passenger Handholds
3-pt. Seat Belts
ISO 3471 & OSHA ROPS Certified
OPERATOR STATION:
Professional High-back Bucket
Seats; Tilt Forward
Adjustment on Driver's Seat
Glove Box
Storage Compartment Under Hood
Two Cup Holders
12v DC Outlet
Digital Instrument Cluster with
(Speed MPH, KPH, RPM, Fuel
Level, Hour meter, Odometer
w/ trip, Clock, Water Temp.,
4WD notice)
DIMENSIONS(WITH ROPS):
119 In. Long x 56.5 In.
Wide x 72 Inches High
PAYLOAD CAPACITY:
800 Lb (363 kg) Total Payload
Capacity which Includes:
200 Lb (91 kg) Driver,
200 Lb (91 kg) Passenger, and
400 Lb (181 kg) in Cargo Box
Towing Capacity:
1,200 Lb (544kg)
CARGO BOX:
32.3 In. Long x 47.6 In. Wide x
11.7 In. Deep
(820mm x 1209mm x 297mm)
8.9 cu. ft (.25 cu.m) Capacity
400 Lbs (181 kg) Box Capacity
Tilting Box; 2-sided Manual
Release
Hinged (Bottom) Tailgate
Alloy Wheels
TIRES:
Front: 26x8-14 Maxxis Bighorns
Rear: 26x10-14 Maxxis Bighorns
TRAIL PACKAGE:
Front Brushguard, Winch, 2"
Front Receiver Hitch and
Recovery Loops, Sport Seats,
Rear Bumper, Cargo Box Rails
SAFETY VIDEO TAPE:
Safety and Operational DVD
Operators Manual
*Engine HP is Provided by the
Engine Manufacturer to be Used
for Comparison Purposes Only,
Actual Operating HP will be
Less.

CODE	ATTACHMENT IDENTIFIER	DESCRIPTION	SUGGESTED LIST PRICE USD ($)

Select One Code From Each Required Category

BASE MACHINE

F.O.B. Janesville, Wisconsin

4761M	RSX850i Trail Green & Yellow - PR *Base Machine Suggested List Price Does Not Include 400 USD Destination Charge.*	14,999.00

DESTINATION

0202	US / CANADA	In Base Price
0230	Australia/New Zealand	Same Price

RSX850i Trail Green & Yellow - PR

Continued

CODE	ATTACHMENT IDENTIFIER	DESCRIPTION	SUGGESTED LIST PRICE USD ($)
		WHEELS WITH TIRES (FOUR)	
1007		Yellow Alloy Wheels Maxxis Bighorn Radial Tires	In Base Price
		DRIVER SEAT	
2001		High Performance Sport Seat - Black	In Base Price
		PACKAGE	
5200		Trail Package *Front Brushguard, Winch 3000Lb., 2" Front Receiver Hitch and Recovery Loops, Rear Bumper, Cargo Box Rails.*	In Base Price
		ATTACHMENTS FOR FIELD CONVERSION	
		Cabs/Roofs/Windshields:	
	BM23373	OPS Full No-Scratch Windshield	531.79
	BM23358	OPS Full Poly Windshield	362.73
	BM23376	OPS Glass Windshield w/ Wiper	714.76
	BM23375	OPS Half Poly Windshield	241.81
	BM23377	OPS Poly Cab *Consists of rear panel and doors. Requires OPS Poly Roof (NOT Sport) and Full Glass or Poly windshield to complete the cab.*	2,996.00
	BM23864	OPS Poly Rear Window	273.91
	BM23397	OPS Poly Roof - Black	329.56
	BM23399	OPS Poly Sport Roof - Black	329.56
	LP10314	OPS Side Mirror - Left *Available through Order Zone*	In Catalog
	LP10315	OPS Side Mirror - Right *Available through Order Zone*	In Catalog
	LP37046	OPS Soft Roof - Black *Available through Order Zone*	In Catalog
	LP37047	OPS Soft Roof - Camo *Available through Order Zone*	In Catalog
	BM24438	Replacement ROPS Kit RSX850i	405.53
		Cargo Box Options / Storage:	
	BM23849	5 Gallon Pail Holder	38.51
	BM23371	Box Mat	86.67
	BM23384	Cargo Box Wall Extensions	329.56
	BM24200	Glove Box Lock	12.84

RSX850i Trail Green & Yellow - PR

Continued

CODE	ATTACHMENT IDENTIFIER	DESCRIPTION	SUGGESTED LIST PRICE USD ($)
		ATTACHMENTS FOR FIELD CONVERSION Continued...	
	LP37044	OPS Overhead Organizer - Black *Available through Order Zone*	In Catalog
	LP37045	OPS Overhead Organizer - Camo *Available through Order Zone*	In Catalog
	LP25929	Rhino Grip XL - Double *Requires cargo box rails. Available through Order Zone.*	In Catalog
	LP25928	Rhino Grip XL - Single *Requires cargo box rails. Available through Order Zone.*	In Catalog
	BM23385	Tire Rack *Requires cargo box rails.*	231.76
		Carts / Hitches:	
	LPPCT10LXATV	10AT Cart *Available through Order Zone*	In Catalog
	LPPCT17ATJD	17AT Cart *Available through Order Zone.*	In Catalog
	LPUT21JD	21 Steel Utility Cart *Available through Order Zone*	In Catalog
	PM05101	Ball Mount - 1.875 in. (48mm)	See Parts
	PM05201	Ball Mount - 2 in. (51mm)	See Parts
	BM22290	Drawbar - 2 in. (51mm)	38.51
		Custom & High Performance:	
	BM24356	Dual Battery Kit *Does not include the dual batteries for the kit, ordered seperately*	299.60
	BM23981	Fox 2.0 Performance Series Shocks	1,652.09
	BM22703	Seat-Belt Comfort Strap (2)	77.04
	BM23933	Sport Steering Wheel	196.89
	BM23379	Stereo and Speaker Kit *Includes mounting kit only; must choose one of the following three head units to have complete stereo:* *Radio, Heavy Duty AM / FM / WB / AUX (SWJHD1120)* *Radio, Heavy Duty AM / FM / WB / SAT / I-POD (SWJHD1620)* *Radio, AM / FM / WB / CD / AUX / SAT Ready (SWJHD3620)* *Must order head unit through Parts.*	660.19
		Lights / Signals:	
	BM24013	Beacon Light *Requires OPS Light Kit Switch Bank. Can be mounted to brake/tail light (no roof), or OPS poly roof if installed.*	219.36
	BM23442	Hella HID Sport Driving Lights *Requires OPS Light Kit Switch Bank for OPS or poly roof mounting, or PreRunner Bumper for bumper mounting.*	935.19

RSX850i Trail Green & Yellow - PR

Continued

CODE	ATTACHMENT IDENTIFIER	DESCRIPTION	SUGGESTED LIST PRICE USD ($)
		ATTACHMENTS FOR FIELD CONVERSION Continued...	
	BM24108	Hella Performance Spot Lights *Requires OPS Light Kit Switch Bank for OPS or poly roof mounting, or PreRunner Bumper for bumper mounting.*	343.47
	BM23370	Horn Kit	97.37
	BM24090	Long Range Light Kit *Requires OPS Light Kit Switch Bank for OPS or poly roof mounting, or PreRunner bumper for bumper mounting.*	191.53
	BM24016	Mid-Range Light Kit *Requires OPS Light Kit Switch Bank for OPS or poly roof mounting.*	123.06
	BM24089	OPS Switch Bank	67.41
		Protection:	
	BM23309	CV Guards *Aluminum*	142.31
	BM23368	Floor Mat	78.11
	BM23361	Nerf Bar	252.51
	BM23364	PreRunner Bumper	329.56
	BM23333	Underbody Armor *Aluminum*	296.39
	LP37036	Vehicle Cover - Black *Available through Order Zone*	In Catalog
	LP37037	Vehicle Cover - Camo *Available through Order Zone*	In Catalog
	LP37040	Vehicle Cover - Transportable (Black) *Available through Order Zone*	In Catalog
	LP37041	Vehicle Cover - Transportable (Camo) *Available through Order Zone*	In Catalog
		Sprayers / Pressure Washers:	
	LP39965	25 Gallon Bed Sprayer *Available through Order Zone*	In Catalog
	LP39964	45 Gallon Bed Sprayer *Available through Order Zone*	In Catalog
	LP39098	45 Gallon High Performance Bed Sprayer *Available through Order Zone*	In Catalog
	LP20485	45 Gallon Tow-Behind Sprayer *Available through Order Zone*	In Catalog
	LP22885	HP 150 in. Precision Boom	In Catalog
	LP39963	HP 45 Gallon Sprayer - Tow Behind *Available through Order Zone*	In Catalog

RSX850i Trail Green & Yellow - PR

Continued

CODE	ATTACHMENT IDENTIFIER	DESCRIPTION	SUGGESTED LIST PRICE USD ($)
		ATTACHMENTS FOR FIELD CONVERSION Continued...	
	LP22884	HP Boomless Nozzles	In Catalog
	LP22911	HP Standard Gator Boom	In Catalog
		Winch:	
	BM21392	Winch Accessories Kit	129.47
		SERVICE CONTRACTS - RESIDENTIAL OWNERS/USE	
		Visit http://www.JohnDeere.com/ServicePlans for more information on John Deere Service Contracts. May not be Available in Parts of the U.S., Not Available in Canada. Price may vary due to driving distance and/or time from machine to dealership location.	
		John Deere Extended Service Plan - 1-Year Option *1-year extended service plan. (6 months of extended service protection; 1-year of warranty transportation.)*	359.99
		John Deere Extended Service Plan - 2-Year Option *2-year extended service plan. (18 months of extended service protection; 2-years of warranty transportation.)*	799.99

RSX850i Sport Green & Yellow - PR

Equipment for Base Machine

ENGINE:
62 Engine HP*(839cc),
Electronic Fuel Injection (EFI)
Two Cylinder, Liquid-cooled,
Dual Overhead Cams,
4-Cycle Gasoline
Full Pressure, Dry Sump
w/ Reservoir Lubrication
System
Replaceable Single Dry-Type
Element Air Cleaner with
Remote Intake
7.4 Gallon (28L) Fuel
Capacity
Solid-state Ignition (12V)
Spark-arresting Muffler
ELECTRICAL:
Electric Start
38 Amp Alternator
340 CCA Battery
Four 27 Watt Halogen
Headlights
Brake and Tail Light
TRANSAXLE/TRANSMISSION:
Continuously Variable
Transmission
Full Clutch Enclosure
Two-speed Transaxle
Operator Selectable 4WD
53 mph (85 kph) Maximum
Forward Speed
On-demand True Four-Wheel
Drive System
Limited Slip; Lever Engagement
Front Differential
Traction Assist
Front and Rear Hydraulic Disk
Brakes
Foot Brake; Mechanical Disk
Actuation
Park Brake
Large Diameter half shafts
w/ TPE Boot Axles
STEERING/SUSPENSION:
Rack and Pinion Steering
Independant Front Suspension
Double A-arm w/ Coil Over Shock
& Anti-Sway Bar
(IRS) with 9 inches (229mm) of
travel
Independent Rear Suspension
Semi-trailing double A-arm
w/ Coil Over Shock & Anti-Sway
Bar (IRS) with 9 inches
(229mm)
of travel
Standard 2" Rear Receiver
19.7 ft. Turning Radius
Ground Clearance: 10.5 In.
(267 mm)
Ground Clearance
(Under Foot Platform):
10.3 In (267 mm)
FRAME/STYLED PARTS:
Full, robotically welded frame
design
Side frame rails for rock
sliding
ROLL-OVER PROTECTIVE STRUCTURE
(ROPS):
1.75 In. (44.4 mm) Steel Tubular
Overhead Structure
Multiple Passenger Handholds
3-pt. Seat Belts
ISO 3471 & OSHA ROPS Certified
OPERATOR STATION:
Professional High-back Bucket
Seats; Tilt Forward
Adjustment on Driver's Seat
Glove Box
Storage Compartment Under Hood
Two Cup Holders
12v DC Outlet
Digital Instrument Cluster with
(Speed MPH, KPH, RPM, Fuel
Level, Hour meter, Odometer
w/ trip, Clock, Water Temp.,
4WD notice)
DIMENSIONS(WITH ROPS):
119 In. Long x 56.5 In.
Wide x 72 Inches High
PAYLOAD CAPACITY:
800 Lb (363 kg) Total Payload
Capacity which Includes:
200 Lb (91 kg) Driver,
200 Lb (91 kg) Passenger, and
400 Lb (181 kg) in Cargo Box
Towing Capacity:
1,200 Lb (544kg)
CARGO BOX:
32.3 In. Long x 47.6 In. Wide x
11.7 In. Deep
(820mm x 1209mm x 297mm)
8.9 cu. ft (.25 cu.m) Capacity
400 Lbs (181 kg) Box Capacity
Tilting Box; 2-sided Manual
Release
Hinged (Bottom) Tailgate
Alloy Wheels
TIRES:
Front: 26x8-14 Maxxis Bighorns
Rear: 26x10-14 Maxxis Bighorns
SPORT PACKAGE:
PreRunner Bumper, Cargo Box
Rails,
Sport Seat, Sport Steering
Wheel, Fox 2.0 Performance
Series Shocks
SAFETY VIDEO TAPE:
Safety and Operational DVD
Operators Manual
*Engine HP is Provided by the
Engine Manufacturer to be Used
for Comparison Purposes Only,
Actual Operating HP will be
Less.

CODE	ATTACHMENT IDENTIFIER	DESCRIPTION	SUGGESTED LIST PRICE USD ($)

Select One Code From Each Required Category

BASE MACHINE

F.O.B. Janesville, Wisconsin

4762M	RSX850i Sport Green & Yellow - PR *Base Machine Suggested List Price Does Not Include 400 USD Destination Charge.*	15,499.00

DESTINATION

0202	US / CANADA	In Base Price
0230	Australia/New Zealand	Same Price

RSX850i Sport Green & Yellow - PR

Continued

CODE	ATTACHMENT IDENTIFIER	DESCRIPTION	SUGGESTED LIST PRICE USD ($)
		WHEELS WITH TIRES (FOUR)	
1007		Yellow Alloy Wheels Maxxis Bighorn Radial Tires	In Base Price
		DRIVER SEAT	
2001		High Performance Sport Seat - Black	In Base Price
		PACKAGE	
5300		Sport Package *PreRunner Bumper, Cargo Box Rails, Sport Steering Wheel.*	In Base Price
		ATTACHMENTS FOR FIELD CONVERSION	
		Cabs/Roofs/Windshields:	
	BM23373	OPS Full No-Scratch Windshield	531.79
	BM23358	OPS Full Poly Windshield	362.73
	BM23376	OPS Glass Windshield w/ Wiper	714.76
	BM23375	OPS Half Poly Windshield	241.81
	BM23377	OPS Poly Cab *Consists of rear panel and doors. Requires OPS Poly Roof (NOT Sport) and Full Glass or Poly windshield to complete the cab.*	2,996.00
	BM23864	OPS Poly Rear Window	273.91
	BM23397	OPS Poly Roof - Black	329.56
	BM23399	OPS Poly Sport Roof - Black	329.56
	LP10314	OPS Side Mirror - Left *Available through Order Zone*	In Catalog
	LP10315	OPS Side Mirror - Right *Available through Order Zone*	In Catalog
	LP37046	OPS Soft Roof - Black *Available through Order Zone*	In Catalog
	LP37047	OPS Soft Roof - Camo *Available through Order Zone*	In Catalog
	BM24438	Replacement ROPS Kit RSX850i	405.53
		Cargo Box Options / Storage:	
	BM23849	5 Gallon Pail Holder	38.51
	BM23371	Box Mat	86.67
	BM23384	Cargo Box Wall Extensions	329.56
	BM24200	Glove Box Lock	12.84

RSX850i Sport Green & Yellow - PR

Continued

CODE	ATTACHMENT IDENTIFIER	DESCRIPTION	SUGGESTED LIST PRICE USD ($)
		ATTACHMENTS FOR FIELD CONVERSION Continued...	
	LP37044	OPS Overhead Organizer - Black *Available through Order Zone*	In Catalog
	LP37045	OPS Overhead Organizer - Camo *Available through Order Zone*	In Catalog
	LP25929	Rhino Grip XL - Double *Requires cargo box rails. Available through Order Zone.*	In Catalog
	LP25928	Rhino Grip XL - Single *Requires cargo box rails. Available through Order Zone.*	In Catalog
	BM23385	Tire Rack *Requires cargo box rails.*	231.76
		Carts / Hitches:	
	LPPCT10LXATV	10AT Cart *Available through Order Zone*	In Catalog
	LPPCT17ATJD	17AT Cart *Available through Order Zone.*	In Catalog
	BM23363	2" Front Receiver Hitch and Recovery Loops	109.14
	LPUT21JD	21 Steel Utility Cart *Available through Order Zone*	In Catalog
	PM05101	Ball Mount - 1.875 in. (48mm)	See Parts
	PM05201	Ball Mount - 2 in. (51mm)	See Parts
	BM22290	Drawbar - 2 in. (51mm)	38.51
		Custom & High Performance:	
	BM24356	Dual Battery Kit *Does not include the dual batteries for the kit, ordered seperately*	299.60
	BM22703	Seat-Belt Comfort Strap (2)	77.04
	BM23379	Stereo and Speaker Kit *Includes mounting kit only; must choose one of the following three head units to have complete stereo:* *Radio, Heavy Duty AM / FM / WB / AUX (SWJHD1120)* *Radio, Heavy Duty AM / FM / WB / SAT / I-POD (SWJHD1620)* *Radio, AM / FM / WB / CD / AUX / SAT Ready (SWJHD3620)* *Must order head unit through Parts.*	660.19
		Lights / Signals:	
	BM24013	Beacon Light *Requires OPS Light Kit Switch Bank. Can be mounted to brake/tail light (no roof), or OPS poly roof if installed.*	219.36
	BM23442	Hella HID Sport Driving Lights *Requires OPS Light Kit Switch Bank for OPS or poly roof mounting, or PreRunner Bumper for bumper mounting.*	935.19
	BM24108	Hella Performance Spot Lights *Requires OPS Light Kit Switch Bank for OPS or poly roof mounting, or PreRunner Bumper for bumper mounting.*	343.47

RSX850i Sport Green & Yellow - PR

Continued

CODE	ATTACHMENT IDENTIFIER	DESCRIPTION	SUGGESTED LIST PRICE USD ($)
		ATTACHMENTS FOR FIELD CONVERSION Continued...	
	BM23370	Horn Kit	97.37
	BM24090	Long Range Light Kit *Requires OPS Light Kit Switch Bank for OPS or poly roof mounting, or PreRunner bumper for bumper mounting.*	191.53
	BM24016	Mid-Range Light Kit *Requires OPS Light Kit Switch Bank for OPS or poly roof mounting.*	123.06
	BM24089	OPS Switch Bank	67.41
		Protection:	
	BM23309	CV Guards *Aluminum*	142.31
	BM23368	Floor Mat	78.11
	BM23366	Front Brushguard	329.56
	BM23361	Nerf Bar	252.51
	BM23362	Rear Bumper	186.19
	BM23333	Underbody Armor *Aluminum*	296.39
	LP37036	Vehicle Cover - Black *Available through Order Zone*	In Catalog
	LP37037	Vehicle Cover - Camo *Available through Order Zone*	In Catalog
	LP37040	Vehicle Cover - Transportable (Black) *Available through Order Zone*	In Catalog
	LP37041	Vehicle Cover - Transportable (Camo) *Available through Order Zone*	In Catalog
		Sprayers / Pressure Washers:	
	LP39965	25 Gallon Bed Sprayer *Available through Order Zone*	In Catalog
	LP39964	45 Gallon Bed Sprayer *Available through Order Zone*	In Catalog
	LP39098	45 Gallon High Performance Bed Sprayer *Available through Order Zone*	In Catalog
	LP20485	45 Gallon Tow-Behind Sprayer *Available through Order Zone*	In Catalog
	LP22885	HP 150 in. Precision Boom	In Catalog
	LP39963	HP 45 Gallon Sprayer - Tow Behind *Available through Order Zone*	In Catalog
	LP22884	HP Boomless Nozzles	In Catalog

RSX850i Sport Green & Yellow - PR

Continued

CODE	ATTACHMENT IDENTIFIER	DESCRIPTION	SUGGESTED LIST PRICE USD ($)
		ATTACHMENTS FOR FIELD CONVERSION Continued...	
	LP22911	HP Standard Gator Boom	In Catalog
		Winch:	
	BM24437	Warn Winch (3000 lbs) *Requires 2 In. Front Receiver Hitch with Recovery Loops for mounting.*	770.40
	BM21392	Winch Accessories Kit	129.47
		SERVICE CONTRACTS - RESIDENTIAL OWNERS/USE	
		Visit http://www.JohnDeere.com/ServicePlans for more information on John Deere Service Contracts. May not be Available in Parts of the U.S., Not Available in Canada. Price may vary due to driving distance and/or time from machine to dealership location.	
		John Deere Extended Service Plan - 1-Year Option *1-year extended service plan. (6 months of extended service protection; 1-year of warranty transportation.)*	359.99
		John Deere Extended Service Plan - 2-Year Option *2-year extended service plan. (18 months of extended service protection; 2-years of warranty transportation.)*	799.99

RSX850i Olive & Black

Equipment for Base Machine

ENGINE:
62 Engine HP*(839cc),
Electronic Fuel Injection (EFI)
Two Cylinder, Liquid-cooled,
Dual Overhead Cams,
4-Cycle Gasoline
Full Pressure, Dry Sump
w/ Reservoir Lubrication
System
Replaceable Single Dry-Type
Element Air Cleaner with
Remote Intake
7.4 Gallon (28L) Fuel
Capacity
Solid-state Ignition (12V)
Spark-arresting Muffler
ELECTRICAL:
Electric Start
38 Amp Alternator
340 CCA Battery
Four 27 Watt Halogen
Headlights
Brake and Tail Light
TRANSAXLE/TRANSMISSION:
Continuously Variable
Transmission
Full Clutch Enclosure
Two-speed Transaxle
Operator Selectable 4WD
53 mph (85 kph) Maximum
Forward Speed
On-demand True Four-Wheel
Drive System
Limited Slip; Lever Engagement
Front Differential
Traction Assist
Front and Rear Hydraulic Disk
Brakes
Foot Brake; Mechanical Disk
Actuation
Park Brake
Large Diameter half shafts
w/ TPE Boot Axles
STEERING/SUSPENSION:
Rack and Pinion Steering
Independant Front Suspension
Double A-arm w/ Coil Over Shock
& Anti-Sway Bar
(IRS) with 9 inches (229mm) of
travel
Independent Rear Suspension
Semi-trailing double A-arm
w/ Coil Over Shock & Anti-Sway
Bar (IRS) with 9 inches
(229mm) of travel
Standard 2" Rear Receiver
19.7 ft. Turning Radius
Ground Clearance: 10.5 In.
(267 mm)
Ground Clearance
(Under Foot Platform):
10.3 In (267 mm)
FRAME/STYLED PARTS:
Full, robotically welded frame
design
Side frame rails for rock
sliding
ROLL-OVER PROTECTIVE STRUCTURE
(ROPS):
1.75 In. (44.4 mm) Steel Tubular
Overhead Structure
Multiple Passenger Handholds
3-pt. Seat Belts
ISO 3471 & OSHA ROPS Certified
OPERATOR STATION:
Professional High-back Bucket
Seats; Tilt Forward
Adjustment on Driver's Seat
Glove Box
Storage Compartment Under Hood
Two Cup Holders
12v DC Outlet
Digital Instrument Cluster with
(Speed MPH, KPH, RPM, Fuel
Level, Hour meter, Odometer
w/ trip, Clock, Water Temp.,
4WD notice)
DIMENSIONS(WITH ROPS):
119 In. Long x 56.5 In.
Wide x 72 Inches High
PAYLOAD CAPACITY:
800 Lb (363 kg) Total Payload
Capacity which Includes:
200 Lb (91 kg) Driver,
200 Lb (91 kg) Passenger, and
400 Lb (181 kg) in Cargo Box
Towing Capacity:
1,200 Lb (544kg)
CARGO BOX:
32.3 In. Long x 47.6 In. Wide x
11.7 In. Deep
(820mm x 1209mm x 297mm)
8.9 cu. ft (.25 cu.m) Capacity
400 Lbs (181 kg) Box Capacity
Tilting Box; 2-sided Manual
Release
Hinged (Bottom) Tailgate
Steel Wheels
TIRES:
Front: 26x8-12 Ancla MT
(Mud Terrain Tires)
Rear: 26x10-12 Ancla MT
(Mud Terrain Tires)
SAFETY VIDEO TAPE:
Safety and Operational DVD
Operators Manual
*Engine HP is Provided by the
Engine Manufacturer to be Used
for Comparison Purposes Only,
Actual Operating HP will be
Less.

CODE	ATTACHMENT IDENTIFIER	DESCRIPTION	SUGGESTED LIST PRICE USD ($)

Select One Code From Each Required Category

BASE MACHINE

F.O.B. Janesville, Wisconsin

4763M	RSX850i Olive & Black *Base Machine Suggested List Price Does Not Include 400 USD Destination Charge.*	13,099.00

DESTINATION

0202	US / CANADA	In Base Price
0230	Australia/New Zealand	Same Price
0195	Mexico	Same Price

RSX850i Olive & Black

Continued

CODE	ATTACHMENT IDENTIFIER	DESCRIPTION	SUGGESTED LIST PRICE USD ($)
		DESTINATION Continued...	
0250		All Other Countries	Same Price
		WHEELS WITH TIRES (FOUR)	
1004		Black Steel Wheels Ancla M-T Extreme Terrain Tire	In Base Price
1008		Silver Alloy Wheels Maxxis Bighorn Radial Tires	823.00
1009		Black Alloy Wheels Maxxis Bighorn Radial Tires	823.00
		DRIVER SEAT	
2000		21 In. Standard HB Seat-Black	In Base Price
2001		High Performance Sport Seat - Black	200.00
		PACKAGE	
5000		Protection Package *Package Consists of: Front Brushguard , OPS Black Poly Sport Roof, Cargo Box Rail.* *Must order 6010 option code when ordering 5000 option code.*	768.00
5010		Less Protection Package	In Base Price
		FRONT PROTECTION	
6000		Front Brush Guard	308.00
6001		PreRunner Bumper	308.00
6010		Less Front Brush Guard or PreRunner Bumper	In Base Price
		Attachments-Order as Desired	
		Spanish North American Kit:	
9435		Spanish North American Operator's Manual and Decal Kit	No Charge
		ATTACHMENTS FOR FIELD CONVERSION	
		Cabs/Roofs/Windshields:	
	BM23373	OPS Full No-Scratch Windshield	531.79
	BM23358	OPS Full Poly Windshield	362.73
	BM23376	OPS Glass Windshield w/ Wiper	714.76
	BM23375	OPS Half Poly Windshield	241.81
	BM23377	OPS Poly Cab *Consists of rear panel and doors. Requires OPS Poly Roof (NOT Sport) and Full Glass or Poly windshield to complete the cab.*	2,996.00
	BM23864	OPS Poly Rear Window	273.91
	BM23397	OPS Poly Roof - Black	329.56

RSX850i Olive & Black
Continued

CODE	ATTACHMENT IDENTIFIER	DESCRIPTION	SUGGESTED LIST PRICE USD ($)
		ATTACHMENTS FOR FIELD CONVERSION Continued...	
	BM23399	OPS Poly Sport Roof - Black	329.56
	LP10314	OPS Side Mirror - Left *Available through Order Zone*	In Catalog
	LP10315	OPS Side Mirror - Right *Available through Order Zone*	In Catalog
	LP37046	OPS Soft Roof - Black *Available through Order Zone*	In Catalog
	LP37047	OPS Soft Roof - Camo *Available through Order Zone*	In Catalog
	BM24385	Replacement ROPS Kit RSX850i	426.93
		Cargo Box Options / Storage:	
	BM23849	5 Gallon Pail Holder	38.51
	BM23371	Box Mat	86.67
	BM23526	Cargo Box Rails	109.14
	BM23384	Cargo Box Wall Extensions	329.56
	BM24200	Glove Box Lock	12.84
	LP37044	OPS Overhead Organizer - Black *Available through Order Zone*	In Catalog
	LP37045	OPS Overhead Organizer - Camo *Available through Order Zone*	In Catalog
	LP25929	Rhino Grip XL - Double *Requires cargo box rails. Available through Order Zone.*	In Catalog
	LP25928	Rhino Grip XL - Single *Requires cargo box rails. Available through Order Zone.*	In Catalog
	BM23385	Tire Rack *Requires cargo box rails.*	231.76
		Carts / Hitches:	
	LPPCT10LXATV	10AT Cart *Available through Order Zone*	In Catalog
	LPPCT17ATJD	17AT Cart *Available through Order Zone.*	In Catalog
	BM23363	2" Front Receiver Hitch and Recovery Loops	109.14
	LPUT21JD	21 Steel Utility Cart *Available through Order Zone*	In Catalog
	PM05101	Ball Mount - 1.875 in. (48mm)	See Parts
	PM05201	Ball Mount - 2 in. (51mm)	See Parts

RSX850i Olive & Black
Continued

CODE	ATTACHMENT IDENTIFIER	DESCRIPTION	SUGGESTED LIST PRICE USD ($)
		ATTACHMENTS FOR FIELD CONVERSION Continued...	
	BM22290	Drawbar - 2 in. (51mm)	38.51
		Custom & High Performance:	
	BM24356	Dual Battery Kit *Does not include the dual batteries for the kit, ordered seperately*	299.60
	BM23981	Fox 2.0 Performance Series Shocks	1,652.09
	BM22703	Seat-Belt Comfort Strap (2)	77.04
	BM23933	Sport Steering Wheel	196.89
	BM23379	Stereo and Speaker Kit *Includes mounting kit only; must choose one of the following three head units to have complete stereo:* *Radio, Heavy Duty AM / FM / WB / AUX (SWJHD1120)* *Radio, Heavy Duty AM / FM / WB / SAT / I-POD (SWJHD1620)* *Radio, AM / FM / WB / CD / AUX / SAT Ready (SWJHD3620)* *Must order head unit through Parts.*	660.19
		Lights / Signals:	
	BM24013	Beacon Light *Requires OPS Light Kit Switch Bank. Can be mounted to brake/tail light (no roof), or OPS poly roof if installed.*	219.36
	BM23442	Hella HID Sport Driving Lights *Requires OPS Light Kit Switch Bank for OPS or poly roof mounting, or PreRunner Bumper for bumper mounting.*	935.19
	BM24108	Hella Performance Spot Lights *Requires OPS Light Kit Switch Bank for OPS or poly roof mounting, or PreRunner Bumper for bumper mounting.*	343.47
	BM23370	Horn Kit	97.37
	BM24090	Long Range Light Kit *Requires OPS Light Kit Switch Bank for OPS or poly roof mounting, or PreRunner bumper for bumper mounting.*	191.53
	BM24016	Mid-Range Light Kit *Requires OPS Light Kit Switch Bank for OPS or poly roof mounting.*	123.06
	BM24089	OPS Switch Bank	67.41
		Protection:	
	BM23309	CV Guards *Aluminum*	142.31
	BM23368	Floor Mat	78.11
	BM23366	Front Brushguard	329.56
	BM23361	Nerf Bar	252.51
	BM23364	PreRunner Bumper	329.56
	BM23362	Rear Bumper	186.19

RSX850i Olive & Black
Continued

CODE	ATTACHMENT IDENTIFIER	DESCRIPTION	SUGGESTED LIST PRICE USD ($)
		ATTACHMENTS FOR FIELD CONVERSION Continued...	
	BM23333	Underbody Armor *Aluminum*	296.39
	LP37036	Vehicle Cover - Black *Available through Order Zone*	In Catalog
	LP37037	Vehicle Cover - Camo *Available through Order Zone*	In Catalog
	LP37040	Vehicle Cover - Transportable (Black) *Available through Order Zone*	In Catalog
	LP37041	Vehicle Cover - Transportable (Camo) *Available through Order Zone*	In Catalog
		Sprayers / Pressure Washers:	
	LP39965	25 Gallon Bed Sprayer *Available through Order Zone*	In Catalog
	LP39964	45 Gallon Bed Sprayer *Available through Order Zone*	In Catalog
	LP39098	45 Gallon High Performance Bed Sprayer *Available through Order Zone*	In Catalog
	LP20485	45 Gallon Tow-Behind Sprayer *Available through Order Zone*	In Catalog
	LP22885	HP 150 in. Precision Boom	In Catalog
	LP39963	HP 45 Gallon Sprayer - Tow Behind *Available through Order Zone*	In Catalog
	LP22884	HP Boomless Nozzles	In Catalog
	LP22911	HP Standard Gator Boom	In Catalog
		Winch:	
	BM24437	Warn Winch (3000 lbs) *Requires 2 In. Front Receiver Hitch with Recovery Loops for mounting.*	770.40
	BM21392	Winch Accessories Kit	129.47
		SERVICE CONTRACTS - RESIDENTIAL OWNERS/USE	
		Visit http://www.JohnDeere.com/ServicePlans for more information on John Deere Service Contracts. May not be Available in Parts of the U.S., Not Available in Canada. Price may vary due to driving distance and/or time from machine to dealership location.	
		John Deere Extended Service Plan - 1-Year Option *1-year extended service plan. (6 months of extended service protection; 1-year of warranty transportation.)*	359.99
		John Deere Extended Service Plan - 2-Year Option *2-year extended service plan. (18 months of extended service protection; 2-years of warranty transportation.)*	799.99

RSX850i Olive & Black
Continued

RSX850i Trail Olive & Black

Equipment for Base Machine

ENGINE:
62 Engine HP*(839cc),
Electronic Fuel Injection (EFI)
Two Cylinder, Liquid-cooled,
Dual Overhead Cams,
4-Cycle Gasoline
Full Pressure, Dry Sump
w/ Reservoir Lubrication
System
Replaceable Single Dry-Type
Element Air Cleaner with
Remote Intake
7.4 Gallon (28L) Fuel
Capacity
Solid-state Ignition (12V)
Spark-arresting Muffler
ELECTRICAL:
Electric Start
38 Amp Alternator
340 CCA Battery
Four 27 Watt Halogen
Headlights
Brake and Tail Light
TRANSAXLE/TRANSMISSION:
Continuously Variable
Transmission
Full Clutch Enclosure
Two-speed Transaxle
Operator Selectable 4WD
53 mph (85 kph) Maximum
Forward Speed
On-demand True Four-Wheel
Drive System
Limited Slip; Lever Engagement
Front Differential
Traction Assist
Front and Rear Hydraulic Disk
Brakes
Foot Brake; Mechanical Disk
Actuation
Park Brake
Large Diameter half shafts
w/ TPE Boot Axles
STEERING/SUSPENSION:
Rack and Pinion Steering
Independant Front Suspension
Double A-arm w/ Coil Over Shock
& Anti-Sway Bar
(IRS) with 9 inches (229mm) of
travel
Independent Rear Suspension
Semi-trailing double A-arm
w/ Coil Over Shock & Anti-Sway
Bar (IRS) with 9 inches
(229mm)
of travel
Standard 2" Rear Receiver
19.7 ft. Turning Radius
Ground Clearance: 10.5 In.
(267 mm)
Ground Clearance
(Under Foot Platform):
10.3 In (267 mm)
FRAME/STYLED PARTS:
Full, robotically welded frame
design
Side frame rails for rock
sliding
ROLL-OVER PROTECTIVE STRUCTURE
(ROPS):
1.75 In. (44.4 mm) Steel Tubular
Overhead Structure
Multiple Passenger Handholds
3-pt. Seat Belts
ISO 3471 & OSHA ROPS Certified
OPERATOR STATION:
Professional High-back Bucket
Seats; Tilt Forward
Adjustment on Driver's Seat
Glove Box
Storage Compartment Under Hood
Two Cup Holders
12v DC Outlet
Digital Instrument Cluster with
(Speed MPH, KPH, RPM, Fuel
Level, Hour meter, Odometer
w/ trip, Clock, Water Temp.,
4WD notice)
DIMENSIONS(WITH ROPS):
119 In. Long x 56.5 In.
Wide x 72 Inches High
PAYLOAD CAPACITY:
800 Lb (363 kg) Total Payload
Capacity which Includes:
200 Lb (91 kg) Driver,
200 Lb (91 kg) Passenger, and
400 Lb (181 kg) in Cargo Box
Towing Capacity:
1,200 Lb (544kg)
CARGO BOX:
32.3 In. Long x 47.6 In. Wide x
11.7 In. Deep
(820mm x 1209mm x 297mm)
8.9 cu. ft (.25 cu.m) Capacity
400 Lbs (181 kg) Box Capacity
Tilting Box; 2-sided Manual
Release
Hinged (Bottom) Tailgate
Alloy Wheels
TIRES:
Front: 26x8-14 Maxxis Bighorns
Rear: 26x10-14 Maxxis Bighorns
TRAIL PACKAGE:
Front Brushguard, Winch, 2"
Front Receiver Hitch and
Recovery Loops, Sport Seats,
Rear Bumper, Cargo Box Rails
SAFETY VIDEO TAPE:
Safety and Operational DVD
Operators Manual
*Engine HP is Provided by the
Engine Manufacturer to be Used
for Comparison Purposes Only,
Actual Operating HP will be
Less.

CODE	ATTACHMENT IDENTIFIER	DESCRIPTION	SUGGESTED LIST PRICE USD ($)

Select One Code From Each Required Category

BASE MACHINE

F.O.B. Janesville, Wisconsin

4764M	RSX850i Trail Olive & Black *Base Machine Suggested List Price Does Not Include 400 USD Destination Charge.*	15,099.00

DESTINATION

0202	US / CANADA	In Base Price
0230	Australia/New Zealand	Same Price

RSX850i Trail Olive & Black
Continued

CODE	ATTACHMENT IDENTIFIER	DESCRIPTION	SUGGESTED LIST PRICE USD ($)
		DESTINATION Continued...	
0195		Mexico	Same Price
0250		All Other Countries	Same Price
		WHEELS WITH TIRES (FOUR)	
1008		Silver Alloy Wheels Maxxis Bighorn Radial Tires	In Base Price
1009		Black Alloy Wheels Maxxis Bighorn Radial Tires	Same Price
		DRIVER SEAT	
2001		High Performance Sport Seat - Black	In Base Price
		PACKAGE	
5200		Trail Package *Front Brushguard, Winch 3000Lb., 2" Front Receiver Hitch and Recovery Loops, Rear Bumper, Cargo Box Rails.*	In Base Price
		Attachments-Order as Desired	
		Spanish North American Kit:	
9435		Spanish North American Operator's Manual and Decal Kit	No Charge
		ATTACHMENTS FOR FIELD CONVERSION	
		Cabs/Roofs/Windshields:	
	BM23373	OPS Full No-Scratch Windshield	531.79
	BM23358	OPS Full Poly Windshield	362.73
	BM23376	OPS Glass Windshield w/ Wiper	714.76
	BM23375	OPS Half Poly Windshield	241.81
	BM23377	OPS Poly Cab *Consists of rear panel and doors. Requires OPS Poly Roof (NOT Sport) and Full Glass or Poly windshield to complete the cab.*	2,996.00
	BM23864	OPS Poly Rear Window	273.91
	BM23397	OPS Poly Roof - Black	329.56
	BM23399	OPS Poly Sport Roof - Black	329.56
	LP10314	OPS Side Mirror - Left *Available through Order Zone*	In Catalog
	LP10315	OPS Side Mirror - Right *Available through Order Zone*	In Catalog
	LP37046	OPS Soft Roof - Black *Available through Order Zone*	In Catalog

RSX850i Trail Olive & Black
Continued

CODE	ATTACHMENT IDENTIFIER	DESCRIPTION	SUGGESTED LIST PRICE USD ($)
		ATTACHMENTS FOR FIELD CONVERSION Continued...	
	LP37047	OPS Soft Roof - Camo *Available through Order Zone*	In Catalog
	BM24438	Replacement ROPS Kit RSX850i	405.53
		Cargo Box Options / Storage:	
	BM23849	5 Gallon Pail Holder	38.51
	BM23371	Box Mat	86.67
	BM23384	Cargo Box Wall Extensions	329.56
	BM24200	Glove Box Lock	12.84
	LP37044	OPS Overhead Organizer - Black *Available through Order Zone*	In Catalog
	LP37045	OPS Overhead Organizer - Camo *Available through Order Zone*	In Catalog
	LP25929	Rhino Grip XL - Double *Requires cargo box rails. Available through Order Zone.*	In Catalog
	LP25928	Rhino Grip XL - Single *Requires cargo box rails. Available through Order Zone.*	In Catalog
	BM23385	Tire Rack *Requires cargo box rails.*	231.76
		Carts / Hitches:	
	LPPCT10LXATV	10AT Cart *Available through Order Zone*	In Catalog
	LPPCT17ATJD	17AT Cart *Available through Order Zone.*	In Catalog
	LPUT21JD	21 Steel Utility Cart *Available through Order Zone*	In Catalog
	PM05101	Ball Mount - 1.875 in. (48mm)	See Parts
	PM05201	Ball Mount - 2 in. (51mm)	See Parts
	BM22290	Drawbar - 2 in. (51mm)	38.51
		Custom & High Performance:	
	BM24356	Dual Battery Kit *Does not include the dual batteries for the kit, ordered seperately*	299.60
	BM23981	Fox 2.0 Performance Series Shocks	1,652.09
	BM22703	Seat-Belt Comfort Strap (2)	77.04
	BM23933	Sport Steering Wheel	196.89

RSX850i Trail Olive & Black
Continued

CODE	ATTACHMENT IDENTIFIER	DESCRIPTION	SUGGESTED LIST PRICE USD ($)
		ATTACHMENTS FOR FIELD CONVERSION Continued...	
	BM23379	Stereo and Speaker Kit *Includes mounting kit only; must choose one of the following three head units to have complete stereo:* *Radio, Heavy Duty AM / FM / WB / AUX (SWJHD1120)* *Radio, Heavy Duty AM / FM / WB / SAT / I-POD (SWJHD1620)* *Radio, AM / FM / WB / CD / AUX / SAT Ready (SWJHD3620)* *Must order head unit through Parts.*	660.19
		Lights / Signals:	
	BM24013	Beacon Light *Requires OPS Light Kit Switch Bank. Can be mounted to brake/tail light (no roof), or OPS poly roof if installed.*	219.36
	BM23442	Hella HID Sport Driving Lights *Requires OPS Light Kit Switch Bank for OPS or poly roof mounting, or PreRunner Bumper for bumper mounting.*	935.19
	BM24108	Hella Performance Spot Lights *Requires OPS Light Kit Switch Bank for OPS or poly roof mounting, or PreRunner Bumper for bumper mounting.*	343.47
	BM23370	Horn Kit	97.37
	BM24090	Long Range Light Kit *Requires OPS Light Kit Switch Bank for OPS or poly roof mounting, or PreRunner bumper for bumper mounting.*	191.53
	BM24016	Mid-Range Light Kit *Requires OPS Light Kit Switch Bank for OPS or poly roof mounting.*	123.06
	BM24089	OPS Switch Bank	67.41
		Protection:	
	BM23309	CV Guards *Aluminum*	142.31
	BM23368	Floor Mat	78.11
	BM23361	Nerf Bar	252.51
	BM23364	PreRunner Bumper	329.56
	BM23333	Underbody Armor *Aluminum*	296.39
	LP37036	Vehicle Cover - Black *Available through Order Zone*	In Catalog
	LP37037	Vehicle Cover - Camo *Available through Order Zone*	In Catalog
	LP37040	Vehicle Cover - Transportable (Black) *Available through Order Zone*	In Catalog
	LP37041	Vehicle Cover - Transportable (Camo) *Available through Order Zone*	In Catalog

RSX850i Trail Olive & Black
Continued

CODE	ATTACHMENT IDENTIFIER	DESCRIPTION	SUGGESTED LIST PRICE USD ($)
		ATTACHMENTS FOR FIELD CONVERSION Continued...	
		Sprayers / Pressure Washers:	
	LP39965	25 Gallon Bed Sprayer *Available through Order Zone*	In Catalog
	LP39964	45 Gallon Bed Sprayer *Available through Order Zone*	In Catalog
	LP39098	45 Gallon High Performance Bed Sprayer *Available through Order Zone*	In Catalog
	LP20485	45 Gallon Tow-Behind Sprayer *Available through Order Zone*	In Catalog
	LP22885	HP 150 in. Precision Boom	In Catalog
	LP39963	HP 45 Gallon Sprayer - Tow Behind *Available through Order Zone*	In Catalog
	LP22884	HP Boomless Nozzles	In Catalog
	LP22911	HP Standard Gator Boom	In Catalog
		Winch:	
	BM21392	Winch Accessories Kit	129.47
		SERVICE CONTRACTS - RESIDENTIAL OWNERS/USE	
		Visit http://www.JohnDeere.com/ServicePlans for more information on John Deere Service Contracts. May not be Available in Parts of the U.S., Not Available in Canada. Price may vary due to driving distance and/or time from machine to dealership location.	
		John Deere Extended Service Plan - 1-Year Option *1-year extended service plan. (6 months of extended service protection; 1-year of warranty transportation.)*	359.99
		John Deere Extended Service Plan - 2-Year Option *2-year extended service plan. (18 months of extended service protection; 2-years of warranty transportation.)*	799.99

RSX850i Sport Olive & Black

Equipment for Base Machine

ENGINE:
62 Engine HP*(839cc),
Electronic Fuel Injection (EFI)
Two Cylinder, Liquid-cooled,
Dual Overhead Cams,
4-Cycle Gasoline
Full Pressure, Dry Sump
w/ Reservoir Lubrication
System
Replaceable Single Dry-Type
Element Air Cleaner with
Remote Intake
7.4 Gallon (28L) Fuel
Capacity
Solid-state Ignition (12V)
Spark-arresting Muffler
ELECTRICAL:
Electric Start
38 Amp Alternator
340 CCA Battery
Four 27 Watt Halogen
Headlights
Brake and Tail Light
TRANSAXLE/TRANSMISSION:
Continuously Variable
Transmission
Full Clutch Enclosure
Two-speed Transaxle
Operator Selectable 4WD
53 mph (85 kph) Maximum
Forward Speed
On-demand True Four-Wheel
Drive System
Limited Slip; Lever Engagement
Front Differential
Traction Assist
Front and Rear Hydraulic Disk
Brakes
Foot Brake; Mechanical Disk
Actuation
Park Brake
Large Diameter half shafts
w/ TPE Boot Axles
STEERING/SUSPENSION:
Rack and Pinion Steering
Independant Front Suspension
Double A-arm w/ Coil Over Shock
& Anti-Sway Bar
(IRS) with 9 inches (229mm) of
travel
Independent Rear Suspension
Semi-trailing double A-arm
w/ Coil Over Shock & Anti-Sway
Bar (IRS) with 9 inches
(229mm)
of travel
Standard 2" Rear Receiver
19.7 ft. Turning Radius
Ground Clearance: 10.5 In.
(267 mm)
Ground Clearance
(Under Foot Platform):
10.3 In (267 mm)
FRAME/STYLED PARTS:
Full, robotically welded frame
design
Side frame rails for rock
sliding
ROLL-OVER PROTECTIVE STRUCTURE
(ROPS):
1.75 In. (44.4 mm) Steel Tubular
Overhead Structure
Multiple Passenger Handholds
3-pt. Seat Belts
ISO 3471 & OSHA ROPS Certified
OPERATOR STATION:
Professional High-back Bucket
Seats; Tilt Forward
Adjustment on Driver's Seat
Glove Box
Storage Compartment Under Hood
Two Cup Holders
12v DC Outlet
Digital Instrument Cluster with
(Speed MPH, KPH, RPM, Fuel
Level, Hour meter, Odometer
w/ trip, Clock, Water Temp.,
4WD notice)
DIMENSIONS(WITH ROPS):
119 In. Long x 56.5 In.
Wide x 72 Inches High
PAYLOAD CAPACITY:
800 Lb (363 kg) Total Payload
Capacity which Includes:
200 Lb (91 kg) Driver,
200 Lb (91 kg) Passenger, and
400 Lb (181 kg) in Cargo Box
Towing Capacity:
1,200 Lb (544kg)
CARGO BOX:
32.3 In. Long x 47.6 In. Wide x
11.7 In. Deep
(820mm x 1209mm x 297mm)
8.9 cu. ft (.25 cu.m) Capacity
400 Lbs (181 kg) Box Capacity
Tilting Box; 2-sided Manual
Release
Hinged (Bottom) Tailgate
Alloy Wheels
TIRES:
Front: 26x8-14 Maxxis Bighorns
Rear: 26x10-14 Maxxis Bighorns
SPORT PACKAGE:
PreRunner Bumper, Cargo Box
Rails,
Sport Seat, Sport Steering
Wheel, Fox 2.0 Performance
Series Shocks
SAFETY VIDEO TAPE:
Safety and Operational DVD
Operators Manual
*Engine HP is Provided by the
Engine Manufacturer to be Used
for Comparison Purposes Only,
Actual Operating HP will be
Less.

CODE	ATTACHMENT IDENTIFIER	DESCRIPTION	SUGGESTED LIST PRICE USD ($)

Select One Code From Each Required Category

BASE MACHINE

F.O.B. Janesville, Wisconsin

4765M	RSX850i Sport Olive & Black *Base Machine Suggested List Price Does Not Include 400 USD Destination Charge.*	15,599.00

DESTINATION

0202	US / CANADA	In Base Price
0230	Australia/New Zealand	Same Price

RSX850i Sport Olive & Black
Continued

CODE	ATTACHMENT IDENTIFIER	DESCRIPTION	SUGGESTED LIST PRICE USD ($)
		DESTINATION Continued...	
0195		Mexico	Same Price
0250		All Other Countries	Same Price
		WHEELS WITH TIRES (FOUR)	
1008		Silver Alloy Wheels Maxxis Bighorn Radial Tires	In Base Price
1009		Black Alloy Wheels Maxxis Bighorn Radial Tires	Same Price
		DRIVER SEAT	
2001		High Performance Sport Seat - Black	In Base Price
		PACKAGE	
5300		Sport Package *PreRunner Bumper, Cargo Box Rails, Sport Steering Wheel.*	In Base Price
		Attachments-Order as Desired	
		Spanish North American Kit:	
9435		Spanish North American Operator's Manual and Decal Kit	No Charge
		ATTACHMENTS FOR FIELD CONVERSION	
		Cabs/Roofs/Windshields:	
	BM23373	OPS Full No-Scratch Windshield	531.79
	BM23358	OPS Full Poly Windshield	362.73
	BM23376	OPS Glass Windshield w/ Wiper	714.76
	BM23375	OPS Half Poly Windshield	241.81
	BM23377	OPS Poly Cab *Consists of rear panel and doors. Requires OPS Poly Roof (NOT Sport) and Full Glass or Poly windshield to complete the cab.*	2,996.00
	BM23864	OPS Poly Rear Window	273.91
	BM23397	OPS Poly Roof - Black	329.56
	BM23399	OPS Poly Sport Roof - Black	329.56
	LP10314	OPS Side Mirror - Left *Available through Order Zone*	In Catalog
	LP10315	OPS Side Mirror - Right *Available through Order Zone*	In Catalog
	LP37046	OPS Soft Roof - Black *Available through Order Zone*	In Catalog
	LP37047	OPS Soft Roof - Camo *Available through Order Zone*	In Catalog

RSX850i Sport Olive & Black
Continued

CODE	ATTACHMENT IDENTIFIER	DESCRIPTION	SUGGESTED LIST PRICE USD ($)
		ATTACHMENTS FOR FIELD CONVERSION Continued...	
	BM24438	Replacement ROPS Kit RSX850i	405.53
		Cargo Box Options / Storage:	
	BM23849	5 Gallon Pail Holder	38.51
	BM23371	Box Mat	86.67
	BM23384	Cargo Box Wall Extensions	329.56
	BM24200	Glove Box Lock	12.84
	LP37044	OPS Overhead Organizer - Black *Available through Order Zone*	In Catalog
	LP37045	OPS Overhead Organizer - Camo *Available through Order Zone*	In Catalog
	LP25929	Rhino Grip XL - Double *Requires cargo box rails. Available through Order Zone.*	In Catalog
	LP25928	Rhino Grip XL - Single *Requires cargo box rails. Available through Order Zone.*	In Catalog
	BM23385	Tire Rack *Requires cargo box rails.*	231.76
		Carts / Hitches:	
	LPPCT10LXATV	10AT Cart *Available through Order Zone*	In Catalog
	LPPCT17ATJD	17AT Cart *Available through Order Zone.*	In Catalog
	BM23363	2" Front Receiver Hitch and Recovery Loops	109.14
	LPUT21JD	21 Steel Utility Cart *Available through Order Zone*	In Catalog
	PM05101	Ball Mount - 1.875 in. (48mm)	See Parts
	PM05201	Ball Mount - 2 in. (51mm)	See Parts
	BM22290	Drawbar - 2 in. (51mm)	38.51
		Custom & High Performance:	
	BM24356	Dual Battery Kit *Does not include the dual batteries for the kit, ordered seperately*	299.60
	BM22703	Seat-Belt Comfort Strap (2)	77.04
	BM23379	Stereo and Speaker Kit *Includes mounting kit only; must choose one of the following three head units to have complete stereo:* *Radio, Heavy Duty AM / FM / WB / AUX (SWJHD1120)* *Radio, Heavy Duty AM / FM / WB / SAT / I-POD (SWJHD1620)* *Radio, AM / FM / WB / CD / AUX / SAT Ready (SWJHD3620)* *Must order head unit through Parts.*	660.19
		Lights / Signals:	

RSX850i Sport Olive & Black
Continued

CODE	ATTACHMENT IDENTIFIER	DESCRIPTION	SUGGESTED LIST PRICE USD ($)
		ATTACHMENTS FOR FIELD CONVERSION Continued...	
	BM24013	Beacon Light *Requires OPS Light Kit Switch Bank. Can be mounted to brake/tail light (no roof), or OPS poly roof if installed.*	219.36
	BM23442	Hella HID Sport Driving Lights *Requires OPS Light Kit Switch Bank for OPS or poly roof mounting, or PreRunner Bumper for bumper mounting.*	935.19
	BM24108	Hella Performance Spot Lights *Requires OPS Light Kit Switch Bank for OPS or poly roof mounting, or PreRunner Bumper for bumper mounting.*	343.47
	BM23370	Horn Kit	97.37
	BM24090	Long Range Light Kit *Requires OPS Light Kit Switch Bank for OPS or poly roof mounting, or PreRunner bumper for bumper mounting.*	191.53
	BM24016	Mid-Range Light Kit *Requires OPS Light Kit Switch Bank for OPS or poly roof mounting.*	123.06
	BM24089	OPS Switch Bank	67.41
		Protection:	
	BM23309	CV Guards *Aluminum*	142.31
	BM23368	Floor Mat	78.11
	BM23366	Front Brushguard	329.56
	BM23361	Nerf Bar	252.51
	BM23362	Rear Bumper	186.19
	BM23333	Underbody Armor *Aluminum*	296.39
	LP37036	Vehicle Cover - Black *Available through Order Zone*	In Catalog
	LP37037	Vehicle Cover - Camo *Available through Order Zone*	In Catalog
	LP37040	Vehicle Cover - Transportable (Black) *Available through Order Zone*	In Catalog
	LP37041	Vehicle Cover - Transportable (Camo) *Available through Order Zone*	In Catalog
		Sprayers / Pressure Washers:	
	LP39965	25 Gallon Bed Sprayer *Available through Order Zone*	In Catalog
	LP39964	45 Gallon Bed Sprayer *Available through Order Zone*	In Catalog

RSX850i Sport Olive & Black
Continued

CODE	ATTACHMENT IDENTIFIER	DESCRIPTION	SUGGESTED LIST PRICE USD ($)
		ATTACHMENTS FOR FIELD CONVERSION Continued...	
	LP39098	45 Gallon High Performance Bed Sprayer *Available through Order Zone*	In Catalog
	LP20485	45 Gallon Tow-Behind Sprayer *Available through Order Zone*	In Catalog
	LP22885	HP 150 in. Precision Boom	In Catalog
	LP39963	HP 45 Gallon Sprayer - Tow Behind *Available through Order Zone*	In Catalog
	LP22884	HP Boomless Nozzles	In Catalog
	LP22911	HP Standard Gator Boom	In Catalog
		Winch:	
	BM24437	Warn Winch (3000 lbs) *Requires 2 In. Front Receiver Hitch with Recovery Loops for mounting.*	770.40
	BM21392	Winch Accessories Kit	129.47
		SERVICE CONTRACTS - RESIDENTIAL OWNERS/USE	
		Visit http://www.JohnDeere.com/ServicePlans for more information on John Deere Service Contracts. May not be Available in Parts of the U.S., Not Available in Canada. Price may vary due to driving distance and/or time from machine to dealership location.	
		John Deere Extended Service Plan - 1-Year Option *1-year extended service plan. (6 months of extended service protection; 1-year of warranty transportation.)*	359.99
		John Deere Extended Service Plan - 2-Year Option *2-year extended service plan. (18 months of extended service protection; 2-years of warranty transportation.)*	799.99

RSX850i Camo

Equipment for Base Machine

ENGINE:
62 Engine HP*(839cc),
Electronic Fuel Injection (EFI)
Two Cylinder, Liquid-cooled,
Dual Overhead Cams,
4-Cycle Gasoline
Full Pressure, Dry Sump
w/ Reservoir Lubrication
System
Replaceable Single Dry-Type
Element Air Cleaner with
Remote Intake
7.4 Gallon (28L) Fuel
Capacity
Solid-state Ignition (12V)
Spark-arresting Muffler
ELECTRICAL:
Electric Start
38 Amp Alternator
340 CCA Battery
Four 27 Watt Halogen
Headlights
Brake and Tail Light
TRANSAXLE/TRANSMISSION:
Continuously Variable
Transmission
Full Clutch Enclosure
Two-speed Transaxle
Operator Selectable 4WD
53 mph (85 kph) Maximum
Forward Speed
On-demand True Four-Wheel
Drive System
Limited Slip; Lever Engagement
Front Differential
Traction Assist
Front and Rear Hydraulic Disk
Brakes
Foot Brake; Mechanical Disk
Actuation
Park Brake
Large Diameter half shafts
w/ TPE Boot Axles
STEERING/SUSPENSION:
Rack and Pinion Steering
Independant Front Suspension
Double A-arm w/ Coil Over Shock
& Anti-Sway Bar
(IRS) with 9 inches (229mm) of
travel
Independent Rear Suspension
Semi-trailing double A-arm
w/ Coil Over Shock & Anti-Sway
Bar (IRS) with 9 inches
(229mm) of travel
Standard 2" Rear Receiver
19.7 ft. Turning Radius
Ground Clearance: 10.5 In.
(267 mm)
Ground Clearance
(Under Foot Platform):
10.3 In (267 mm)
FRAME/STYLED PARTS:
Full, robotically welded frame
design
Side frame rails for rock
sliding
ROLL-OVER PROTECTIVE STRUCTURE
(ROPS):
1.75 In. (44.4 mm) Steel Tubular
Overhead Structure
Multiple Passenger Handholds
3-pt. Seat Belts
ISO 3471 & OSHA ROPS Certified
OPERATOR STATION:
Professional High-back Bucket
Seats; Tilt Forward
Adjustment on Driver's Seat
Glove Box
Storage Compartment Under Hood
Two Cup Holders
12v DC Outlet
Digital Instrument Cluster with
(Speed MPH, KPH, RPM, Fuel
Level, Hour meter, Odometer
w/ trip, Clock, Water Temp.,
4WD notice)
DIMENSIONS(WITH ROPS):
119 In. Long x 56.5 In.
Wide x 72 Inches High
PAYLOAD CAPACITY:
800 Lb (363 kg) Total Payload
Capacity which Includes:
200 Lb (91 kg) Driver,
200 Lb (91 kg) Passenger, and
400 Lb (181 kg) in Cargo Box
Towing Capacity:
1,200 Lb (544kg)
CARGO BOX:
32.3 In. Long x 47.6 In. Wide x
11.7 In. Deep
(820mm x 1209mm x 297mm)
8.9 cu. ft (.25 cu.m) Capacity
400 Lbs (181 kg) Box Capacity
Tilting Box; 2-sided Manual
Release
Hinged (Bottom) Tailgate
Steel Wheels
TIRES:
Front: 26x8-12 Ancla MT
(Mud Terrain Tires)
Rear: 26x10-12 Ancla MT
(Mud Terrain Tires)
SAFETY VIDEO TAPE:
Safety and Operational DVD
Operators Manual
*Engine HP is Provided by the
Engine Manufacturer to be Used
for Comparison Purposes Only,
Actual Operating HP will be
Less.

CODE	ATTACHMENT IDENTIFIER	DESCRIPTION	SUGGESTED LIST PRICE USD ($)

Select One Code From Each Required Category

BASE MACHINE

F.O.B. Janesville, Wisconsin

4766M	RSX850i Camo *Base Machine Suggested List Price Does Not Include 400 USD Destination Charge.*	13,549.00

DESTINATION

0202	US / CANADA	In Base Price
0230	Australia/New Zealand	Same Price
0195	Mexico	Same Price

RSX850i Camo
Continued

CODE	ATTACHMENT IDENTIFIER	DESCRIPTION	SUGGESTED LIST PRICE USD ($)
		DESTINATION Continued...	
0250		All Other Countries	Same Price
		WHEELS WITH TIRES (FOUR)	
1004		Black Steel Wheels Ancla M-T Extreme Terrain Tire	In Base Price
1008		Silver Alloy Wheels Maxxis Bighorn Radial Tires	823.00
1009		Black Alloy Wheels Maxxis Bighorn Radial Tires	823.00
		DRIVER SEAT	
2000		21 In. Standard HB Seat-Black	In Base Price
2001		High Performance Sport Seat - Black	200.00
		PACKAGE	
5000		Protection Package *Package Consists of: Front Brushguard, OPS Camo Poly Roof, Cargo Box Rail.* *Must order 6010 option code when ordering 5000 option code.*	1,154.00
5010		Less Protection Package	In Base Price
		FRONT PROTECTION	
6000		Front Brush Guard	308.00
6001		PreRunner Bumper	308.00
6010		Less Front Brush Guard or PreRunner Bumper	In Base Price
		Attachments-Order as Desired	
		Spanish North American Kit:	
9435		Spanish North American Operator's Manual and Decal Kit	No Charge
		ATTACHMENTS FOR FIELD CONVERSION	
		Cabs/Roofs/Windshields:	
	BM23373	OPS Full No-Scratch Windshield	531.79
	BM23358	OPS Full Poly Windshield	362.73
	BM23376	OPS Glass Windshield w/ Wiper	714.76
	BM23375	OPS Half Poly Windshield	241.81
	BM23377	OPS Poly Cab *Consists of rear panel and doors. Requires OPS Poly Roof (NOT Sport) and Full Glass or Poly windshield to complete the cab.*	2,996.00
	BM23864	OPS Poly Rear Window	273.91
	BM23397	OPS Poly Roof - Black	329.56

RSX850i Camo
Continued

CODE	ATTACHMENT IDENTIFIER	DESCRIPTION	SUGGESTED LIST PRICE USD ($)
		ATTACHMENTS FOR FIELD CONVERSION Continued...	
	BM23853	OPS Poly Roof - Camo	714.76
	BM23399	OPS Poly Sport Roof - Black	329.56
	LP10314	OPS Side Mirror - Left *Available through Order Zone*	In Catalog
	LP10315	OPS Side Mirror - Right *Available through Order Zone*	In Catalog
	LP37046	OPS Soft Roof - Black *Available through Order Zone*	In Catalog
	LP37047	OPS Soft Roof - Camo *Available through Order Zone*	In Catalog
	BM24385	Replacement ROPS Kit RSX850i	426.93
		Cargo Box Options / Storage:	
	BM23849	5 Gallon Pail Holder	38.51
	BM23371	Box Mat	86.67
	BM23526	Cargo Box Rails	109.14
	BM23384	Cargo Box Wall Extensions	329.56
	BM24200	Glove Box Lock	12.84
	LP37044	OPS Overhead Organizer - Black *Available through Order Zone*	In Catalog
	LP37045	OPS Overhead Organizer - Camo *Available through Order Zone*	In Catalog
	LP25929	Rhino Grip XL - Double *Requires cargo box rails. Available through Order Zone.*	In Catalog
	LP25928	Rhino Grip XL - Single *Requires cargo box rails. Available through Order Zone.*	In Catalog
	BM23385	Tire Rack *Requires cargo box rails.*	231.76
		Carts / Hitches:	
	LPPCT10LXATV	10AT Cart *Available through Order Zone*	In Catalog
	LPPCT17ATJD	17AT Cart *Available through Order Zone.*	In Catalog
	BM23363	2" Front Receiver Hitch and Recovery Loops	109.14
	LPUT21JD	21 Steel Utility Cart *Available through Order Zone*	In Catalog
	PM05101	Ball Mount - 1.875 in. (48mm)	See Parts

RSX850i Camo
Continued

CODE	ATTACHMENT IDENTIFIER	DESCRIPTION	SUGGESTED LIST PRICE USD ($)
		ATTACHMENTS FOR FIELD CONVERSION Continued...	
	PM05201	Ball Mount - 2 in. (51mm)	See Parts
	BM22290	Drawbar - 2 in. (51mm)	38.51
		Custom & High Performance:	
	BM24356	Dual Battery Kit *Does not include the dual batteries for the kit, ordered seperately*	299.60
	BM23981	Fox 2.0 Performance Series Shocks	1,652.09
	BM22703	Seat-Belt Comfort Strap (2)	77.04
	BM23933	Sport Steering Wheel	196.89
	BM23379	Stereo and Speaker Kit *Includes mounting kit only; must choose one of the following three head units to have complete stereo:* *Radio, Heavy Duty AM / FM / WB / AUX (SWJHD1120)* *Radio, Heavy Duty AM / FM / WB / SAT / I-POD (SWJHD1620)* *Radio, AM / FM / WB / CD / AUX / SAT Ready (SWJHD3620)* *Must order head unit through Parts.*	660.19
		Lights / Signals:	
	BM24013	Beacon Light *Requires OPS Light Kit Switch Bank. Can be mounted to brake/tail light (no roof), or OPS poly roof if installed.*	219.36
	BM23442	Hella HID Sport Driving Lights *Requires OPS Light Kit Switch Bank for OPS or poly roof mounting, or PreRunner Bumper for bumper mounting.*	935.19
	BM24108	Hella Performance Spot Lights *Requires OPS Light Kit Switch Bank for OPS or poly roof mounting, or PreRunner Bumper for bumper mounting.*	343.47
	BM23370	Horn Kit	97.37
	BM24090	Long Range Light Kit *Requires OPS Light Kit Switch Bank for OPS or poly roof mounting, or PreRunner bumper for bumper mounting.*	191.53
	BM24016	Mid-Range Light Kit *Requires OPS Light Kit Switch Bank for OPS or poly roof mounting.*	123.06
	BM24089	OPS Switch Bank	67.41
		Protection:	
	BM23309	CV Guards *Aluminum*	142.31
	BM23368	Floor Mat	78.11
	BM23366	Front Brushguard	329.56
	BM23361	Nerf Bar	252.51
	BM23364	PreRunner Bumper	329.56

RSX850i Camo

Continued

CODE	ATTACHMENT IDENTIFIER	DESCRIPTION	SUGGESTED LIST PRICE USD ($)
		ATTACHMENTS FOR FIELD CONVERSION Continued...	
	BM23362	Rear Bumper	186.19
	BM23333	Underbody Armor *Aluminum*	296.39
	LP37036	Vehicle Cover - Black *Available through Order Zone*	In Catalog
	LP37037	Vehicle Cover - Camo *Available through Order Zone*	In Catalog
	LP37040	Vehicle Cover - Transportable (Black) *Available through Order Zone*	In Catalog
	LP37041	Vehicle Cover - Transportable (Camo) *Available through Order Zone*	In Catalog
		Sprayers / Pressure Washers:	
	LP39965	25 Gallon Bed Sprayer *Available through Order Zone*	In Catalog
	LP39964	45 Gallon Bed Sprayer *Available through Order Zone*	In Catalog
	LP39098	45 Gallon High Performance Bed Sprayer *Available through Order Zone*	In Catalog
	LP20485	45 Gallon Tow-Behind Sprayer *Available through Order Zone*	In Catalog
	LP22885	HP 150 in. Precision Boom	In Catalog
	LP39963	HP 45 Gallon Sprayer - Tow Behind *Available through Order Zone*	In Catalog
	LP22884	HP Boomless Nozzles	In Catalog
	LP22911	HP Standard Gator Boom	In Catalog
		Winch:	
	BM24437	Warn Winch (3000 lbs) *Requires 2 In. Front Receiver Hitch with Recovery Loops for mounting.*	770.40
	BM21392	Winch Accessories Kit	129.47
		SERVICE CONTRACTS - RESIDENTIAL OWNERS/USE	
		Visit http://www.JohnDeere.com/ServicePlans for more information on John Deere Service Contracts. May not be Available in Parts of the U.S., Not Available in Canada. Price may vary due to driving distance and/or time from machine to dealership location.	
		John Deere Extended Service Plan - 1-Year Option *1-year extended service plan. (6 months of extended service protection; 1-year of warranty transportation.)*	359.99
		John Deere Extended Service Plan - 2-Year Option *2-year extended service plan. (18 months of extended service protection;*	799.99

RSX850i Camo

Continued

CODE	ATTACHMENT IDENTIFIER	DESCRIPTION	SUGGESTED LIST PRICE USD ($)
		SERVICE CONTRACTS - RESIDENTIAL OWNERS/USE	
		Continued...	
		2-years of warranty transportation.)	

RSX850i Trail Camo with Black Alloys - PR

Equipment for Base Machine

ENGINE:
62 Engine HP*(839cc),
Electronic Fuel Injection (EFI)
Two Cylinder, Liquid-cooled,
Dual Overhead Cams,
4-Cycle Gasoline
Full Pressure, Dry Sump
w/ Reservoir Lubrication
System
Replaceable Single Dry-Type
Element Air Cleaner with
Remote Intake
7.4 Gallon (28L) Fuel
Capacity
Solid-state Ignition (12V)
Spark-arresting Muffler
ELECTRICAL:
Electric Start
38 Amp Alternator
340 CCA Battery
Four 27 Watt Halogen
Headlights
Brake and Tail Light
TRANSAXLE/TRANSMISSION:
Continuously Variable
Transmission
Full Clutch Enclosure
Two-speed Transaxle
Operator Selectable 4WD
53 mph (85 kph) Maximum
Forward Speed
On-demand True Four-Wheel
Drive System
Limited Slip; Lever Engagement
Front Differential
Traction Assist
Front and Rear Hydraulic Disk
Brakes
Foot Brake; Mechanical Disk
Actuation
Park Brake
Large Diameter half shafts
w/ TPE Boot Axles
STEERING/SUSPENSION:
Rack and Pinion Steering
Independant Front Suspension
Double A-arm w/ Coil Over Shock
& Anti-Sway Bar
(IRS) with 9 inches (229mm) of
travel
Independent Rear Suspension
Semi-trailing double A-arm
w/ Coil Over Shock & Anti-Sway
Bar (IRS) with 9 inches
(229mm)
of travel
Standard 2" Rear Receiver
19.7 ft. Turning Radius
Ground Clearance: 10.5 In.
(267 mm)
Ground Clearance
(Under Foot Platform):
10.3 In (267 mm)
FRAME/STYLED PARTS:
Full, robotically welded frame
design
Side frame rails for rock
sliding
ROLL-OVER PROTECTIVE STRUCTURE
(ROPS):
1.75 In. (44.4 mm) Steel Tubular
Overhead Structure
Multiple Passenger Handholds
3-pt. Seat Belts
ISO 3471 & OSHA ROPS Certified
OPERATOR STATION:
Professional High-back Bucket
Seats; Tilt Forward
Adjustment on Driver's Seat
Glove Box
Storage Compartment Under Hood
Two Cup Holders
12v DC Outlet
Digital Instrument Cluster with
(Speed MPH, KPH, RPM, Fuel
Level, Hour meter, Odometer
w/ trip, Clock, Water Temp.,
4WD notice)
DIMENSIONS(WITH ROPS):
119 In. Long x 56.5 In.
Wide x 72 Inches High
PAYLOAD CAPACITY:
800 Lb (363 kg) Total Payload
Capacity which Includes:
200 Lb (91 kg) Driver,
200 Lb (91 kg) Passenger, and
400 Lb (181 kg) in Cargo Box
Towing Capacity:
1,200 Lb (544kg)
CARGO BOX:
32.3 In. Long x 47.6 In. Wide x
11.7 In. Deep
(820mm x 1209mm x 297mm)
8.9 cu. ft (.25 cu.m) Capacity
400 Lbs (181 kg) Box Capacity
Tilting Box; 2-sided Manual
Release
Hinged (Bottom) Tailgate
Alloy Wheels
TIRES:
Front: 26x8-14 Maxxis Bighorns
Rear: 26x10-14 Maxxis Bighorns
TRAIL PACKAGE:
Front Brushguard, Winch, 2"
Front Receiver Hitch and
Recovery Loops, Sport Seats,
Rear Bumper, Cargo Box Rails
SAFETY VIDEO TAPE:
Safety and Operational DVD
Operators Manual
*Engine HP is Provided by the
Engine Manufacturer to be Used
for Comparison Purposes Only,
Actual Operating HP will be
Less.

CODE	ATTACHMENT IDENTIFIER	DESCRIPTION	SUGGESTED LIST PRICE USD ($)

Select One Code From Each Required Category

BASE MACHINE

F.O.B. Janesville, Wisconsin

4767M	RSX850i Trail Camo with Black Alloys - PR *Base Machine Suggested List Price Does Not Include 400 USD Destination Charge.*	15,549.00

DESTINATION

0202	US / CANADA	In Base Price
0230	Australia/New Zealand	Same Price

RSX850i Trail Camo with Black Alloys - PR

Continued

CODE	ATTACHMENT IDENTIFIER	DESCRIPTION	SUGGESTED LIST PRICE USD ($)
		WHEELS WITH TIRES (FOUR)	
1009		Black Alloy Wheels Maxxis Bighorn Radial Tires	In Base Price
		DRIVER SEAT	
2001		High Performance Sport Seat - Black	In Base Price
		PACKAGE	
5200		Trail Package *Front Brushguard, Winch 3000Lb., 2" Front Receiver Hitch and Recovery Loops, Rear Bumper, Cargo Box Rails.*	In Base Price
		ATTACHMENTS FOR FIELD CONVERSION	
		Cabs/Roofs/Windshields:	
	BM23373	OPS Full No-Scratch Windshield	531.79
	BM23358	OPS Full Poly Windshield	362.73
	BM23376	OPS Glass Windshield w/ Wiper	714.76
	BM23375	OPS Half Poly Windshield	241.81
	BM23377	OPS Poly Cab *Consists of rear panel and doors. Requires OPS Poly Roof (NOT Sport) and Full Glass or Poly windshield to complete the cab.*	2,996.00
	BM23864	OPS Poly Rear Window	273.91
	BM23397	OPS Poly Roof - Black	329.56
	BM23853	OPS Poly Roof - Camo	714.76
	BM23399	OPS Poly Sport Roof - Black	329.56
	LP10314	OPS Side Mirror - Left *Available through Order Zone*	In Catalog
	LP10315	OPS Side Mirror - Right *Available through Order Zone*	In Catalog
	LP37046	OPS Soft Roof - Black *Available through Order Zone*	In Catalog
	LP37047	OPS Soft Roof - Camo *Available through Order Zone*	In Catalog
	BM24438	Replacement ROPS Kit RSX850i	405.53
		Cargo Box Options / Storage:	
	BM23849	5 Gallon Pail Holder	38.51
	BM23371	Box Mat	86.67
	BM23384	Cargo Box Wall Extensions	329.56

RSX850i Trail Camo with Black Alloys - PR
Continued

CODE	ATTACHMENT IDENTIFIER	DESCRIPTION	SUGGESTED LIST PRICE USD ($)
		ATTACHMENTS FOR FIELD CONVERSION Continued...	
	BM24200	Glove Box Lock	12.84
	LP37044	OPS Overhead Organizer - Black *Available through Order Zone*	In Catalog
	LP37045	OPS Overhead Organizer - Camo *Available through Order Zone*	In Catalog
	LP25929	Rhino Grip XL - Double *Requires cargo box rails. Available through Order Zone.*	In Catalog
	LP25928	Rhino Grip XL - Single *Requires cargo box rails. Available through Order Zone.*	In Catalog
	BM23385	Tire Rack *Requires cargo box rails.*	231.76
		Carts / Hitches:	
	LPPCT10LXATV	10AT Cart *Available through Order Zone*	In Catalog
	LPPCT17ATJD	17AT Cart *Available through Order Zone.*	In Catalog
	LPUT21JD	21 Steel Utility Cart *Available through Order Zone*	In Catalog
	PM05101	Ball Mount - 1.875 in. (48mm)	See Parts
	PM05201	Ball Mount - 2 in. (51mm)	See Parts
	BM22290	Drawbar - 2 in. (51mm)	38.51
		Custom & High Performance:	
	BM24356	Dual Battery Kit *Does not include the dual batteries for the kit, ordered seperately*	299.60
	BM23981	Fox 2.0 Performance Series Shocks	1,652.09
	BM22703	Seat-Belt Comfort Strap (2)	77.04
	BM23933	Sport Steering Wheel	196.89
	BM23379	Stereo and Speaker Kit *Includes mounting kit only; must choose one of the following three head units to have complete stereo:* *Radio, Heavy Duty AM / FM / WB / AUX (SWJHD1120)* *Radio, Heavy Duty AM / FM / WB / SAT / I-POD (SWJHD1620)* *Radio, AM / FM / WB / CD / AUX / SAT Ready (SWJHD3620)* *Must order head unit through Parts.*	660.19
		Lights / Signals:	
	BM24013	Beacon Light *Requires OPS Light Kit Switch Bank. Can be mounted to brake/tail light (no roof), or OPS poly roof if installed.*	219.36

RSX850i Trail Camo with Black Alloys - PR
Continued

CODE	ATTACHMENT IDENTIFIER	DESCRIPTION	SUGGESTED LIST PRICE USD ($)
		ATTACHMENTS FOR FIELD CONVERSION Continued...	
	BM23442	Hella HID Sport Driving Lights *Requires OPS Light Kit Switch Bank for OPS or poly roof mounting, or PreRunner Bumper for bumper mounting.*	935.19
	BM24108	Hella Performance Spot Lights *Requires OPS Light Kit Switch Bank for OPS or poly roof mounting, or PreRunner Bumper for bumper mounting.*	343.47
	BM23370	Horn Kit	97.37
	BM24090	Long Range Light Kit *Requires OPS Light Kit Switch Bank for OPS or poly roof mounting, or PreRunner bumper for bumper mounting.*	191.53
	BM24016	Mid-Range Light Kit *Requires OPS Light Kit Switch Bank for OPS or poly roof mounting.*	123.06
	BM24089	OPS Switch Bank	67.41
		Protection:	
	BM23309	CV Guards *Aluminum*	142.31
	BM23368	Floor Mat	78.11
	BM23361	Nerf Bar	252.51
	BM23364	PreRunner Bumper	329.56
	BM23333	Underbody Armor *Aluminum*	296.39
	LP37036	Vehicle Cover - Black *Available through Order Zone*	In Catalog
	LP37037	Vehicle Cover - Camo *Available through Order Zone*	In Catalog
	LP37040	Vehicle Cover - Transportable (Black) *Available through Order Zone*	In Catalog
	LP37041	Vehicle Cover - Transportable (Camo) *Available through Order Zone*	In Catalog
		Sprayers / Pressure Washers:	
	LP39965	25 Gallon Bed Sprayer *Available through Order Zone*	In Catalog
	LP39964	45 Gallon Bed Sprayer *Available through Order Zone*	In Catalog
	LP39098	45 Gallon High Performance Bed Sprayer *Available through Order Zone*	In Catalog
	LP20485	45 Gallon Tow-Behind Sprayer *Available through Order Zone*	In Catalog
	LP22885	HP 150 in. Precision Boom	In Catalog

RSX850i Trail Camo with Black Alloys - PR

Continued

CODE	ATTACHMENT IDENTIFIER	DESCRIPTION	SUGGESTED LIST PRICE USD ($)
		ATTACHMENTS FOR FIELD CONVERSION Continued...	
	LP39963	HP 45 Gallon Sprayer - Tow Behind *Available through Order Zone*	In Catalog
	LP22884	HP Boomless Nozzles	In Catalog
	LP22911	HP Standard Gator Boom	In Catalog
		Winch:	
	BM21392	Winch Accessories Kit	129.47
		SERVICE CONTRACTS - RESIDENTIAL OWNERS/USE	
		Visit http://www.JohnDeere.com/ServicePlans for more information on John Deere Service Contracts. May not be Available in Parts of the U.S., Not Available in Canada. Price may vary due to driving distance and/or time from machine to dealership location.	
		John Deere Extended Service Plan - 1-Year Option *1-year extended service plan. (6 months of extended service protection; 1-year of warranty transportation.)*	359.99
		John Deere Extended Service Plan - 2-Year Option *2-year extended service plan. (18 months of extended service protection; 2-years of warranty transportation.)*	799.99

RSX850i Trail Camo with Silver Alloys - PR

Equipment for Base Machine

ENGINE:
62 Engine HP*(839cc),
Electronic Fuel Injection (EFI)
Two Cylinder, Liquid-cooled,
Dual Overhead Cams,
4-Cycle Gasoline
Full Pressure, Dry Sump
w/ Reservoir Lubrication
System
Replaceable Single Dry-Type
Element Air Cleaner with
Remote Intake
7.4 Gallon (28L) Fuel
Capacity
Solid-state Ignition (12V)
Spark-arresting Muffler
ELECTRICAL:
Electric Start
38 Amp Alternator
340 CCA Battery
Four 27 Watt Halogen
Headlights
Brake and Tail Light
TRANSAXLE/TRANSMISSION:
Continuously Variable
Transmission
Full Clutch Enclosure
Two-speed Transaxle
Operator Selectable 4WD
53 mph (85 kph) Maximum
Forward Speed
On-demand True Four-Wheel
Drive System
Limited Slip; Lever Engagement
Front Differential
Traction Assist
Front and Rear Hydraulic Disk
Brakes
Foot Brake; Mechanical Disk
Actuation
Park Brake
Large Diameter half shafts
w/ TPE Boot Axles
STEERING/SUSPENSION:
Rack and Pinion Steering
Independant Front Suspension
Double A-arm w/ Coil Over Shock
& Anti-Sway Bar
(IRS) with 9 inches (229mm) of
travel
Independent Rear Suspension
Semi-trailing double A-arm
w/ Coil Over Shock & Anti-Sway
Bar (IRS) with 9 inches
(229mm)
of travel
Standard 2" Rear Receiver
19.7 ft. Turning Radius
Ground Clearance: 10.5 In.
(267 mm)
Ground Clearance
(Under Foot Platform):
10.3 In (267 mm)
FRAME/STYLED PARTS:
Full, robotically welded frame
design
Side frame rails for rock
sliding
ROLL-OVER PROTECTIVE STRUCTURE
(ROPS):
1.75 In. (44.4 mm) Steel Tubular
Overhead Structure
Multiple Passenger Handholds
3-pt. Seat Belts
ISO 3471 & OSHA ROPS Certified
OPERATOR STATION:
Professional High-back Bucket
Seats; Tilt Forward
Adjustment on Driver's Seat
Glove Box
Storage Compartment Under Hood
Two Cup Holders
12v DC Outlet
Digital Instrument Cluster with
(Speed MPH, KPH, RPM, Fuel
Level, Hour meter, Odometer
w/ trip, Clock, Water Temp.,
4WD notice)
DIMENSIONS(WITH ROPS):
119 In. Long x 56.5 In.
Wide x 72 Inches High
PAYLOAD CAPACITY:
800 Lb (363 kg) Total Payload
Capacity which Includes:
200 Lb (91 kg) Driver,
200 Lb (91 kg) Passenger, and
400 Lb (181 kg) in Cargo Box
Towing Capacity:
1,200 Lb (544kg)
CARGO BOX:
32.3 In. Long x 47.6 In. Wide x
11.7 In. Deep
(820mm x 1209mm x 297mm)
8.9 cu. ft (.25 cu.m) Capacity
400 Lbs (181 kg) Box Capacity
Tilting Box; 2-sided Manual
Release
Hinged (Bottom) Tailgate
Alloy Wheels
TIRES:
Front: 26x8-14 Maxxis Bighorns
Rear: 26x10-14 Maxxis Bighorns
TRAIL PACKAGE:
Front Brushguard, Winch, 2"
Front Receiver Hitch and
Recovery Loops, Sport Seats,
Rear Bumper, Cargo Box Rails
SAFETY VIDEO TAPE:
Safety and Operational DVD
Operators Manual
*Engine HP is Provided by the
Engine Manufacturer to be Used
for Comparison Purposes Only,
Actual Operating HP will be
Less.

CODE	ATTACHMENT IDENTIFIER	DESCRIPTION	SUGGESTED LIST PRICE USD ($)

Select One Code From Each Required Category

BASE MACHINE

F.O.B. Janesville, Wisconsin

476AM	RSX850i Trail Camo with Silver Alloys - PR *Base Machine Suggested List Price Does Not Include 400 USD Destination Charge.*	15,549.00

DESTINATION

0202	US / CANADA	In Base Price
0230	Australia/New Zealand	Same Price

RSX850i Trail Camo with Silver Alloys - PR

Continued

CODE	ATTACHMENT IDENTIFIER	DESCRIPTION	SUGGESTED LIST PRICE USD ($)
		WHEELS WITH TIRES (FOUR)	
1008		Silver Alloy Wheels Maxxis Bighorn Radial Tires	In Base Price
		DRIVER SEAT	
2001		High Performance Sport Seat - Black	In Base Price
		PACKAGE	
5200		Trail Package *Front Brushguard, Winch 3000Lb., 2" Front Receiver Hitch and Recovery Loops, Rear Bumper, Cargo Box Rails.*	In Base Price
		ATTACHMENTS FOR FIELD CONVERSION	
		Cabs/Roofs/Windshields:	
	BM23373	OPS Full No-Scratch Windshield	531.79
	BM23358	OPS Full Poly Windshield	362.73
	BM23376	OPS Glass Windshield w/ Wiper	714.76
	BM23375	OPS Half Poly Windshield	241.81
	BM23377	OPS Poly Cab *Consists of rear panel and doors. Requires OPS Poly Roof (NOT Sport) and Full Glass or Poly windshield to complete the cab.*	2,996.00
	BM23864	OPS Poly Rear Window	273.91
	BM23397	OPS Poly Roof - Black	329.56
	BM23853	OPS Poly Roof - Camo	714.76
	BM23399	OPS Poly Sport Roof - Black	329.56
	LP10314	OPS Side Mirror - Left *Available through Order Zone*	In Catalog
	LP10315	OPS Side Mirror - Right *Available through Order Zone*	In Catalog
	LP37046	OPS Soft Roof - Black *Available through Order Zone*	In Catalog
	LP37047	OPS Soft Roof - Camo *Available through Order Zone*	In Catalog
	BM24438	Replacement ROPS Kit RSX850i	405.53
		Cargo Box Options / Storage:	
	BM23849	5 Gallon Pail Holder	38.51
	BM23371	Box Mat	86.67
	BM23384	Cargo Box Wall Extensions	329.56

RSX850i Trail Camo with Silver Alloys - PR
Continued

CODE	ATTACHMENT IDENTIFIER	DESCRIPTION	SUGGESTED LIST PRICE USD ($)
		ATTACHMENTS FOR FIELD CONVERSION Continued...	
	BM24200	Glove Box Lock	12.84
	LP37044	OPS Overhead Organizer - Black *Available through Order Zone*	In Catalog
	LP37045	OPS Overhead Organizer - Camo *Available through Order Zone*	In Catalog
	LP25929	Rhino Grip XL - Double *Requires cargo box rails. Available through Order Zone.*	In Catalog
	LP25928	Rhino Grip XL - Single *Requires cargo box rails. Available through Order Zone.*	In Catalog
	BM23385	Tire Rack *Requires cargo box rails.*	231.76
		Carts / Hitches:	
	LPPCT10LXATV	10AT Cart *Available through Order Zone*	In Catalog
	LPPCT17ATJD	17AT Cart *Available through Order Zone.*	In Catalog
	LPUT21JD	21 Steel Utility Cart *Available through Order Zone*	In Catalog
	PM05101	Ball Mount - 1.875 in. (48mm)	See Parts
	PM05201	Ball Mount - 2 in. (51mm)	See Parts
	BM22290	Drawbar - 2 in. (51mm)	38.51
		Custom & High Performance:	
	BM24356	Dual Battery Kit *Does not include the dual batteries for the kit, ordered seperately*	299.60
	BM23981	Fox 2.0 Performance Series Shocks	1,652.09
	BM22703	Seat-Belt Comfort Strap (2)	77.04
	BM23933	Sport Steering Wheel	196.89
	BM23379	Stereo and Speaker Kit *Includes mounting kit only; must choose one of the following three head units to have complete stereo:* *Radio, Heavy Duty AM / FM / WB / AUX (SWJHD1120)* *Radio, Heavy Duty AM / FM / WB / SAT / I-POD (SWJHD1620)* *Radio, AM / FM / WB / CD / AUX / SAT Ready (SWJHD3620)* *Must order head unit through Parts.*	660.19
		Lights / Signals:	
	BM24013	Beacon Light *Requires OPS Light Kit Switch Bank. Can be mounted to brake/tail light (no roof), or OPS poly roof if installed.*	219.36

RSX850i Trail Camo with Silver Alloys - PR
Continued

CODE	ATTACHMENT IDENTIFIER	DESCRIPTION	SUGGESTED LIST PRICE USD ($)
		ATTACHMENTS FOR FIELD CONVERSION Continued...	
	BM23442	Hella HID Sport Driving Lights *Requires OPS Light Kit Switch Bank for OPS or poly roof mounting, or PreRunner Bumper for bumper mounting.*	935.19
	BM24108	Hella Performance Spot Lights *Requires OPS Light Kit Switch Bank for OPS or poly roof mounting, or PreRunner Bumper for bumper mounting.*	343.47
	BM23370	Horn Kit	97.37
	BM24090	Long Range Light Kit *Requires OPS Light Kit Switch Bank for OPS or poly roof mounting, or PreRunner bumper for bumper mounting.*	191.53
	BM24016	Mid-Range Light Kit *Requires OPS Light Kit Switch Bank for OPS or poly roof mounting.*	123.06
	BM24089	OPS Switch Bank	67.41
		Protection:	
	BM23309	CV Guards *Aluminum*	142.31
	BM23368	Floor Mat	78.11
	BM23361	Nerf Bar	252.51
	BM23364	PreRunner Bumper	329.56
	BM23333	Underbody Armor *Aluminum*	296.39
	LP37036	Vehicle Cover - Black *Available through Order Zone*	In Catalog
	LP37037	Vehicle Cover - Camo *Available through Order Zone*	In Catalog
	LP37040	Vehicle Cover - Transportable (Black) *Available through Order Zone*	In Catalog
	LP37041	Vehicle Cover - Transportable (Camo) *Available through Order Zone*	In Catalog
		Sprayers / Pressure Washers:	
	LP39965	25 Gallon Bed Sprayer *Available through Order Zone*	In Catalog
	LP39964	45 Gallon Bed Sprayer *Available through Order Zone*	In Catalog
	LP39098	45 Gallon High Performance Bed Sprayer *Available through Order Zone*	In Catalog
	LP20485	45 Gallon Tow-Behind Sprayer *Available through Order Zone*	In Catalog
	LP22885	HP 150 in. Precision Boom	In Catalog

RSX850i Trail Camo with Silver Alloys - PR

Continued

CODE	ATTACHMENT IDENTIFIER	DESCRIPTION	SUGGESTED LIST PRICE USD ($)
		ATTACHMENTS FOR FIELD CONVERSION Continued...	
	LP39963	HP 45 Gallon Sprayer - Tow Behind *Available through Order Zone*	In Catalog
	LP22884	HP Boomless Nozzles	In Catalog
	LP22911	HP Standard Gator Boom	In Catalog
		Winch:	
	BM21392	Winch Accessories Kit	129.47
		SERVICE CONTRACTS - RESIDENTIAL OWNERS/USE	
		Visit http://www.JohnDeere.com/ServicePlans for more information on John Deere Service Contracts. May not be Available in Parts of the U.S., Not Available in Canada. Price may vary due to driving distance and/or time from machine to dealership location.	
		John Deere Extended Service Plan - 1-Year Option *1-year extended service plan. (6 months of extended service protection; 1-year of warranty transportation.)*	359.99
		John Deere Extended Service Plan - 2-Year Option *2-year extended service plan. (18 months of extended service protection; 2-years of warranty transportation.)*	799.99

RSX850i Sport Camo

Equipment for Base Machine

ENGINE:
62 Engine HP*(839cc),
Electronic Fuel Injection (EFI)
Two Cylinder, Liquid-cooled,
Dual Overhead Cams,
4-Cycle Gasoline
Full Pressure, Dry Sump
w/ Reservoir Lubrication
System
Replaceable Single Dry-Type
Element Air Cleaner with
Remote Intake
7.4 Gallon (28L) Fuel
Capacity
Solid-state Ignition (12V)
Spark-arresting Muffler
ELECTRICAL:
Electric Start
38 Amp Alternator
340 CCA Battery
Four 27 Watt Halogen
Headlights
Brake and Tail Light
TRANSAXLE/TRANSMISSION:
Continuously Variable
Transmission
Full Clutch Enclosure
Two-speed Transaxle
Operator Selectable 4WD
53 mph (85 kph) Maximum
Forward Speed
On-demand True Four-Wheel
Drive System
Limited Slip; Lever Engagement
Front Differential
Traction Assist
Front and Rear Hydraulic Disk
Brakes
Foot Brake; Mechanical Disk
Actuation
Park Brake
Large Diameter half shafts
w/ TPE Boot Axles
STEERING/SUSPENSION:
Rack and Pinion Steering
Independant Front Suspension
Double A-arm w/ Coil Over Shock
& Anti-Sway Bar
(IRS) with 9 inches (229mm) of
travel
Independent Rear Suspension
Semi-trailing double A-arm
w/ Coil Over Shock & Anti-Sway
Bar (IRS) with 9 inches
(229mm)
of travel
Standard 2" Rear Receiver
19.7 ft. Turning Radius
Ground Clearance: 10.5 In.
(267 mm)
Ground Clearance
(Under Foot Platform):
10.3 In (267 mm)
FRAME/STYLED PARTS:
Full, robotically welded frame
design
Side frame rails for rock
sliding
ROLL-OVER PROTECTIVE STRUCTURE
(ROPS):
1.75 In. (44.4 mm) Steel Tubular
Overhead Structure
Multiple Passenger Handholds
3-pt. Seat Belts
ISO 3471 & OSHA ROPS Certified
OPERATOR STATION:
Professional High-back Bucket
Seats; Tilt Forward
Adjustment on Driver's Seat
Glove Box
Storage Compartment Under Hood
Two Cup Holders
12v DC Outlet
Digital Instrument Cluster with
(Speed MPH, KPH, RPM, Fuel
Level, Hour meter, Odometer
w/ trip, Clock, Water Temp.,
4WD notice)
DIMENSIONS(WITH ROPS):
119 In. Long x 56.5 In.
Wide x 72 Inches High
PAYLOAD CAPACITY:
800 Lb (363 kg) Total Payload
Capacity which Includes:
200 Lb (91 kg) Driver,
200 Lb (91 kg) Passenger, and
400 Lb (181 kg) in Cargo Box
Towing Capacity:
1,200 Lb (544kg)
CARGO BOX:
32.3 In. Long x 47.6 In. Wide x
11.7 In. Deep
(820mm x 1209mm x 297mm)
8.9 cu. ft (.25 cu.m) Capacity
400 Lbs (181 kg) Box Capacity
Tilting Box; 2-sided Manual
Release
Hinged (Bottom) Tailgate
Alloy Wheels
TIRES:
Front: 26x8-14 Maxxis Bighorns
Rear: 26x10-14 Maxxis Bighorns
SPORT PACKAGE:
PreRunner Bumper, Cargo Box
Rails,
Sport Seat, Sport Steering
Wheel, Fox 2.0 Performance
Series Shocks
SAFETY VIDEO TAPE:
Safety and Operational DVD
Operators Manual
*Engine HP is Provided by the
Engine Manufacturer to be Used
for Comparison Purposes Only,
Actual Operating HP will be
Less.

CODE	ATTACHMENT IDENTIFIER	DESCRIPTION	SUGGESTED LIST PRICE USD ($)

Select One Code From Each Required Category

BASE MACHINE

F.O.B. Janesville, Wisconsin

4768M	RSX850i Sport Camo *Base Machine Suggested List Price Does Not Include 400 USD Destination Charge.*	16,049.00

DESTINATION

0202	US / CANADA	In Base Price
0230	Australia/New Zealand	Same Price

RSX850i Sport Camo
Continued

CODE	ATTACHMENT IDENTIFIER	DESCRIPTION	SUGGESTED LIST PRICE USD ($)
		DESTINATION Continued...	
0195		Mexico	Same Price
0250		All Other Countries	Same Price
		WHEELS WITH TIRES (FOUR)	
1008		Silver Alloy Wheels Maxxis Bighorn Radial Tires	Same Price
1009		Black Alloy Wheels Maxxis Bighorn Radial Tires	In Base Price
		DRIVER SEAT	
2001		High Performance Sport Seat - Black	In Base Price
		PACKAGE	
5300		Sport Package *PreRunner Bumper, Cargo Box Rails, Sport Steering Wheel.*	In Base Price
		Attachments-Order as Desired	
		Spanish North American Kit:	
9435		Spanish North American Operator's Manual and Decal Kit	No Charge
		ATTACHMENTS FOR FIELD CONVERSION	
		Cabs/Roofs/Windshields:	
	BM23373	OPS Full No-Scratch Windshield	531.79
	BM23358	OPS Full Poly Windshield	362.73
	BM23376	OPS Glass Windshield w/ Wiper	714.76
	BM23375	OPS Half Poly Windshield	241.81
	BM23377	OPS Poly Cab *Consists of rear panel and doors. Requires OPS Poly Roof (NOT Sport) and Full Glass or Poly windshield to complete the cab.*	2,996.00
	BM23864	OPS Poly Rear Window	273.91
	BM23397	OPS Poly Roof - Black	329.56
	BM23853	OPS Poly Roof - Camo	714.76
	BM23399	OPS Poly Sport Roof - Black	329.56
	LP10314	OPS Side Mirror - Left *Available through Order Zone*	In Catalog
	LP10315	OPS Side Mirror - Right *Available through Order Zone*	In Catalog
	LP37046	OPS Soft Roof - Black *Available through Order Zone*	In Catalog

RSX850i Sport Camo
Continued

CODE	ATTACHMENT IDENTIFIER	DESCRIPTION	SUGGESTED LIST PRICE USD ($)
		ATTACHMENTS FOR FIELD CONVERSION Continued...	
	LP37047	OPS Soft Roof - Camo *Available through Order Zone*	In Catalog
	BM24438	Replacement ROPS Kit RSX850i	405.53
		Cargo Box Options / Storage:	
	BM23849	5 Gallon Pail Holder	38.51
	BM23371	Box Mat	86.67
	BM23384	Cargo Box Wall Extensions	329.56
	BM24200	Glove Box Lock	12.84
	LP37044	OPS Overhead Organizer - Black *Available through Order Zone*	In Catalog
	LP37045	OPS Overhead Organizer - Camo *Available through Order Zone*	In Catalog
	LP25929	Rhino Grip XL - Double *Requires cargo box rails. Available through Order Zone.*	In Catalog
	LP25928	Rhino Grip XL - Single *Requires cargo box rails. Available through Order Zone.*	In Catalog
	BM23385	Tire Rack *Requires cargo box rails.*	231.76
		Carts / Hitches:	
	LPPCT10LXATV	10AT Cart *Available through Order Zone*	In Catalog
	LPPCT17ATJD	17AT Cart *Available through Order Zone.*	In Catalog
	BM23363	2" Front Receiver Hitch and Recovery Loops	109.14
	LPUT21JD	21 Steel Utility Cart *Available through Order Zone*	In Catalog
	PM05101	Ball Mount - 1.875 in. (48mm)	See Parts
	PM05201	Ball Mount - 2 in. (51mm)	See Parts
	BM22290	Drawbar - 2 in. (51mm)	38.51
		Custom & High Performance:	
	BM24356	Dual Battery Kit *Does not include the dual batteries for the kit, ordered seperately*	299.60
	BM22703	Seat-Belt Comfort Strap (2)	77.04

RSX850i Sport Camo
Continued

CODE	ATTACHMENT IDENTIFIER	DESCRIPTION	SUGGESTED LIST PRICE USD ($)
		ATTACHMENTS FOR FIELD CONVERSION Continued...	
	BM23379	Stereo and Speaker Kit *Includes mounting kit only; must choose one of the following three head units to have complete stereo:* *Radio, Heavy Duty AM / FM / WB / AUX (SWJHD1120)* *Radio, Heavy Duty AM / FM / WB / SAT / I-POD (SWJHD1620)* *Radio, AM / FM / WB / CD / AUX / SAT Ready (SWJHD3620)* *Must order head unit through Parts.*	660.19
		Lights / Signals:	
	BM24013	Beacon Light *Requires OPS Light Kit Switch Bank. Can be mounted to brake/tail light (no roof), or OPS poly roof if installed.*	219.36
	BM23442	Hella HID Sport Driving Lights *Requires OPS Light Kit Switch Bank for OPS or poly roof mounting, or PreRunner Bumper for bumper mounting.*	935.19
	BM24108	Hella Performance Spot Lights *Requires OPS Light Kit Switch Bank for OPS or poly roof mounting, or PreRunner Bumper for bumper mounting.*	343.47
	BM23370	Horn Kit	97.37
	BM24090	Long Range Light Kit *Requires OPS Light Kit Switch Bank for OPS or poly roof mounting, or PreRunner bumper for bumper mounting.*	191.53
	BM24016	Mid-Range Light Kit *Requires OPS Light Kit Switch Bank for OPS or poly roof mounting.*	123.06
	BM24089	OPS Switch Bank	67.41
		Protection:	
	BM23309	CV Guards *Aluminum*	142.31
	BM23368	Floor Mat	78.11
	BM23366	Front Brushguard	329.56
	BM23361	Nerf Bar	252.51
	BM23362	Rear Bumper	186.19
	BM23333	Underbody Armor *Aluminum*	296.39
	LP37036	Vehicle Cover - Black *Available through Order Zone*	In Catalog
	LP37037	Vehicle Cover - Camo *Available through Order Zone*	In Catalog
	LP37040	Vehicle Cover - Transportable (Black) *Available through Order Zone*	In Catalog
	LP37041	Vehicle Cover - Transportable (Camo) *Available through Order Zone*	In Catalog

RSX850i Sport Camo

Continued

CODE	ATTACHMENT IDENTIFIER	DESCRIPTION	SUGGESTED LIST PRICE USD ($)
		ATTACHMENTS FOR FIELD CONVERSION Continued...	
		Sprayers / Pressure Washers:	
	LP39965	25 Gallon Bed Sprayer *Available through Order Zone*	In Catalog
	LP39964	45 Gallon Bed Sprayer *Available through Order Zone*	In Catalog
	LP39098	45 Gallon High Performance Bed Sprayer *Available through Order Zone*	In Catalog
	LP20485	45 Gallon Tow-Behind Sprayer *Available through Order Zone*	In Catalog
	LP22885	HP 150 in. Precision Boom	In Catalog
	LP39963	HP 45 Gallon Sprayer - Tow Behind *Available through Order Zone*	In Catalog
	LP22884	HP Boomless Nozzles	In Catalog
	LP22911	HP Standard Gator Boom	In Catalog
		Winch:	
	BM24437	Warn Winch (3000 lbs) *Requires 2 In. Front Receiver Hitch with Recovery Loops for mounting.*	770.40
	BM21392	Winch Accessories Kit	129.47
		SERVICE CONTRACTS - RESIDENTIAL OWNERS/USE	
		Visit http://www.JohnDeere.com/ServicePlans for more information on John Deere Service Contracts. May not be Available in Parts of the U.S., Not Available in Canada. Price may vary due to driving distance and/or time from machine to dealership location.	
		John Deere Extended Service Plan - 1-Year Option *1-year extended service plan. (6 months of extended service protection; 1-year of warranty transportation.)*	359.99
		John Deere Extended Service Plan - 2-Year Option *2-year extended service plan. (18 months of extended service protection; 2-years of warranty transportation.)*	799.99

XUV 550 Green & Yellow Protection PR

Equipment for Base Machine

ENGINE:
16 Engine HP*(570cc),
Dynamically tuned carburetor
Two-cylinder, Air-cooled
4-Cycle Gasoline
Full Pressure Lubrication System
Replaceable Single Dry-Type Element Air Cleaner with Remote Intake
4.9 Gallon (18.5L) Fuel Capacity
Solid-state Ignition (12V)
Spark-arresting Muffler
ELECTRICAL:
Electric Start
16 Amp Regulated, 3-Phase Alternator
340 CCA Battery
Two 55 Watt Halogen Headlights
TRANSAXLE/TRANSMISSION:
Continuously Variable Transmission
Full Clutch Enclosure
Two-speed Transaxle
Operator Selectable 4WD
28 mph (45 kph) Maximum Forward Speed
Selectable Four-Wheel Drive System
Front and Rear Hydraulic Disk Brakes with stainless steel rotors
Foot-operated Park brake
Large diameter half shafts with TPE boots
STEERING/SUSPENSION:
Rack and Pinion Steering
Indpendent Front Suspension (IRS) with 9 inches (229 mm) of travel
Independent Rear Suspension (IRS) with 8 inches (203mm) of travel
Integrated 2 In. Rear Receiver
12.3 ft. Turning Radius
Ground Clearance: 10.5 In. (267 mm)
FRAME/STYLED PARTS:
Full, robotically welded frame design
Side frame rails for rock sliding
OCCUPANT PROTECTION SYSTEM(OPS):
1.75 In. (44.4 mm) Steel Tubular Overhead Structure
Multiple Passenger Handholds
3-pt. Seat Belts
SAE J2194 & OSHA ROPS Certified
OPERATOR STATION:
Bench Seats
Hip Restraint Bars for Driver and Passenger

Sealed Glove Box
Sealed Storage Compartment Under Hood
Two cup holders in dash
Fuel Gauge
Instrument Cluster - Hour Meter, and Seat Belt
12v DC Outlet
FRONTAL PROTECTION:
Integrated Front Bumper Accepts optional front receiver, winch and brush guard

DIMENSIONS(WITH OPS):
113 In. Long x 56.5 In. Wide x 73.5 In. High
PAYLOAD CAPACITY
800 Lb (363 kg) Total Payload Capacity which Includes:
200 Lb (91 kg) Driver,
200 Lb (91 kg) Passenger, and 400 Lb (181 kg) in Cargo Box
Towing Capacity:
1,100 Lb (499kg)
CARGO BOX:
32.3 In. Long x 47.6 In. Wide x 11.7 In. Deep (82 cm x 120.9 cm x 29.7 cm)
8.9 cu. ft (.25 cu.m) Capacity
400 Lbs (181 kg) Box Capacity
Tilting Box , Open from both sides
Hinged (Bottom) Tailgate, Removeable

TIRES:
Front: 25x8-12 Ancla XT (Extreme Terrain Tires)
Rear: 25x10-12 Ancla XT (Extreme Terrain Tires)
SAFETY VIDEO TAPE:
Safety and Operational DVD
Operators Manual
*Engine HP is Provided by the Engine Manufacturer to be Used for Comparison Purposes Only, Actual Operating HP will be Less.

CODE	ATTACHMENT IDENTIFIER	DESCRIPTION	SUGGESTED LIST PRICE USD ($)

Select One Code From Each Required Category

BASE MACHINE

F.O.B. Janesville, Wisconsin

516AM	XUV 550 Green & Yellow Protection PR *Base Machine Suggested List Price Does Not Include 400 USD Destination Charge.*	8,199.00

DESTINATION

0202	US / CANADA	In Base Price
0230	Australia/New Zealand	Same Price

WHEELS WITH TIRES (FOUR)

1001	Yellow Steel Wheels Ancla M-T Extreme Terrain Tire	In Base Price

XUV 550 Green & Yellow Protection PR

Continued

CODE	ATTACHMENT IDENTIFIER	DESCRIPTION	SUGGESTED LIST PRICE USD ($)
		DRIVER SEAT	
2001		Bench Seat - Yellow	In Base Price
		CARGO BOX LIFT	
3003		Manual Lift	In Base Price
		OPS/REAR SCREEN/BRAKE/TAILLIGHT	
4002		OPS, XUV 550 with Brake/Taillight	50.00
		PROTECTION/UTILITY AND PROTECTION PACKAGES	
5000		Protection Package Package Consists of: Front Brushguard, OPS Black Poly Roof, Cargo Box Rail	768.00
		ATTACHMENTS FOR FIELD CONVERSION	
		Cabs/Roofs/Windshields:	
	BM23373	OPS Full No-Scratch Windshield	531.79
	BM23358	OPS Full Poly Windshield	362.73
	BM23376	OPS Glass Windshield w/ Wiper	714.76
	BM23375	OPS Half Poly Windshield	241.81
	BM23378	OPS Poly Cab *Includes doors and rear panel. OPS Poly Roof and Windshield sold separately.*	2,533.76
	BM23864	OPS Poly Rear Window *Not compatibile with OPS Poly Cab.*	273.91
	BM23397	OPS Poly Roof - Black	329.56
	BM23396	OPS Rear Screen *Includes headrests*	219.36
	LP10314	OPS Side Mirror - Left *Available through Order Zone*	In Catalog
	LP10315	OPS Side Mirror - Right *Available through Order Zone*	In Catalog
	LP37046	OPS Soft Roof - Black *Available through Order Zone*	In Catalog
	BM24382	Replacement Ops Kit XUV 550	384.13
		Cargo Box Options / Storage:	
	BM23849	5 Gallon Pail Holder *Cargo box rails required*	38.51
	BM23371	Box Mat	86.67
	BM23307	Cargo Box Power Lift	770.40

XUV 550 Green & Yellow Protection PR

Continued

CODE	ATTACHMENT IDENTIFIER	DESCRIPTION	SUGGESTED LIST PRICE USD ($)
		ATTACHMENTS FOR FIELD CONVERSION Continued...	
	BM23384	Cargo Box Wall Extensions *Requires cargo box rails.* *Not compatible with poly cab.*	329.56
	BM23360	Front Rack *Requires Front Brushguard for mounting.*	241.81
	BM24200	Glove Box Lock	12.84
	LP37044	OPS Overhead Organizer - Black *Available through Order Zone*	In Catalog
	LP25929	Rhino Grip XL - Double *Requires cargo box rails.* *Available through Order Zone.*	In Catalog
	LP25928	Rhino Grip XL - Single *Requires cargo box rails.* *Available through Order Zone.*	In Catalog
	BM23385	Tire Rack *Requires cargo box rails.*	231.76
		Carts / Hitches:	
	LPPCT10LXATV	10AT Cart *Available through Order Zone*	In Catalog
	LPPCT17ATJD	17AT Cart *Available through Order Zone.*	In Catalog
	BM23363	2" Front Receiver Hitch and Recovery Loops	109.14
	LPUT21JD	21 Steel Utility Cart *Available through Order Zone*	In Catalog
	PM05101	Ball Mount - 1.875 in. (48mm)	See Parts
	PM05201	Ball Mount - 2 in. (51mm)	See Parts
	BM22290	Drawbar - 2 in. (51mm)	38.51
		Custom & High Performance:	
	BM23438	High Capacity Alternator	714.76
	BM24171	Over-Temperature Sensor Kit	53.50
	BM22703	Seat-Belt Comfort Strap (2) *Also compatible with Deluxe Cab.*	77.04
	BM24376	Speedometer Kit	109.14
	BM23379	Stereo and Speaker Kit *Includes mounting kit only; must choose one of the following three head units to have complete stereo:* *Radio, Heavy Duty AM / FM / WB / AUX (SWJHD1120)* *Radio, Heavy Duty AM / FM / WB / SAT / I-POD (SWJHD1620)* *Radio, AM / FM / WB / CD / AUX / SAT Ready (SWJHD3620)* *Must order head unit through Parts.*	660.19

XUV 550 Green & Yellow Protection PR

Continued

CODE	ATTACHMENT IDENTIFIER	DESCRIPTION	SUGGESTED LIST PRICE USD ($)
		ATTACHMENTS FOR FIELD CONVERSION Continued...	
		Lights / Signals:	
	BM23369	Backup Alarm	101.66
	BM24013	Beacon Light *Requires OPS Light Kit Switch Bank. Also requires Brake and Tail Light Installation Kit, if 4002 / 4003 option code is not selected, for brake light mounting; OR OPS Poly Roof for roof mounting.*	219.36
	BM24233	Brake and Tail Light Installation Kit *Required to mount Brake and Tail Light Kit.*	33.17
	BM24100	Brake and Tail Light Kit *Requires Brake and Tail Light Installation Kit.*	53.50
	BM23367	Deluxe Light Kit *Includes flashers, turn signals (front & rear), brake & tail lights, and back-up lights. Requires OPS Poly Roof for installation.*	384.13
	BM23442	Hella HID Sport Driving Lights *Requires OPS Light Kit Switch Bank for OPS or poly roof mounting, or Front Brushguard for bumper mounting.*	935.19
	BM24108	Hella Performance Spot Lights *Requires OPS Light Kit Switch Bank for OPS or poly roof mounting, or Front Brushguard for bumper mounting.*	343.47
	BM23370	Horn Kit	97.37
	BM24090	Long Range Light Kit *Requires OPS Light Kit Switch Bank for OPS or Poly Roof mounting; or Front Brushguard for bumper mounting.*	191.53
	BM24016	Mid-Range Light Kit *Requires OPS Light Kit Switch Bank. Compatible with OPS Poly Roofs or on the OPS alone. Can be mounted on the front or rear of the OPS or poly roof. Can not be used for rear mounting on XUV550 S4.*	123.06
	BM24089	OPS Light Kit Switch Bank *Accommodates up to three separate OPS Light Kits.*	67.41
		Protection:	
	BM23309	CV Guards	142.31
	BM23368	Floor Mat	78.11
	BM23365	Front Brushguard	329.56
	BM23394	Front Fender Guards *Requires Front Brushguard*	175.49
	BM24095	Full Underbody Skid Plate	163.71
	BM23362	Rear Bumper	186.19
	LP37036	Vehicle Cover - Black *Available through Order Zone*	In Catalog

XUV 550 Green & Yellow Protection PR

Continued

CODE	ATTACHMENT IDENTIFIER	DESCRIPTION	SUGGESTED LIST PRICE USD ($)
		ATTACHMENTS FOR FIELD CONVERSION Continued...	
	LP37037	Vehicle Cover - Camo *Available through Order Zone*	In Catalog
	LP37040	Vehicle Cover - Transportable (Black) *Available through Order Zone*	In Catalog
	LP37041	Vehicle Cover - Transportable (Camo) *Available through Order Zone*	In Catalog
		Sprayers / Pressure Washers:	
	LP39965	25 Gallon Bed Sprayer *Available through Order Zone*	In Catalog
	LP39964	45 Gallon Bed Sprayer *Available through Order Zone*	In Catalog
	LP39098	45 Gallon High Performance Bed Sprayer *Available through Order Zone*	In Catalog
	LP20485	45 Gallon Tow-Behind Sprayer *Available through Order Zone*	In Catalog
	LP22885	HP 150 in. Precision Boom *Compatible with HP sprayers.* *Available through Order Zone.*	In Catalog
	LP39963	HP 45 Gallon Sprayer - Tow Behind *Available through Order Zone*	In Catalog
	LP22884	HP Boomless Nozzles *Compatible with HP sprayers.* *Available through Order Zone.*	In Catalog
	LP22911	HP Standard Gator Boom *Compatible with HP sprayers.* *Available through Order Zone.*	In Catalog
		Winch:	
	BM24437	Warn Winch (3000 lbs) *Requires 2 In. Front Receiver Hitch with Recovery Loops for mounting.*	770.40
	BM21392	Winch Accessories Kit	129.47
		SERVICE CONTRACTS - RESIDENTIAL OWNERS/USE	
		Visit http://www.JohnDeere.com/ServicePlans for more information on John Deere Service Contracts. May not be Available in Parts of the U.S., Not Available in Canada. Price may vary due to driving distance and/or time from machine to dealership location.	
		John Deere Extended Service Plan - 2-Year Option *Available for T-Series, HPX and XUV utility vehicles only.)* *2-year extended service plan. (1 year of extended service protection);* *2-years of warranty transportation.*	399.99
		John Deere Extended Service Plan - 3-Year Option *3-year extended service plan. (2 years of extended service protection);* *3-years of warranty transportation.*	569.99

XUV 550 Green & Yellow Protection PR
Continued

XUV 550 Green & Yellow Utility and Protection PR

Equipment for Base Machine

ENGINE:
16 Engine HP*(570cc), Dynamically tuned carburetor
Two-cylinder, Air-cooled 4-Cycle Gasoline
Full Pressure Lubrication System
Replaceable Single Dry-Type Element Air Cleaner with Remote Intake
4.9 Gallon (18.5L) Fuel Capacity
Solid-state Ignition (12V)
Spark-arresting Muffler
ELECTRICAL:
Electric Start
16 Amp Regulated, 3-Phase Alternator
340 CCA Battery
Two 55 Watt Halogen Headlights
TRANSAXLE/TRANSMISSION:
Continuously Variable Transmission
Full Clutch Enclosure
Two-speed Transaxle
Operator Selectable 4WD
28 mph (45 kph) Maximum Forward Speed
Selectable Four-Wheel Drive System
Front and Rear Hydraulic Disk Brakes with stainless steel rotors
Foot-operated Park brake
Large diameter half shafts with TPE boots
STEERING/SUSPENSION:
Rack and Pinion Steering
Indpendent Front Suspension (IRS) with 9 inches (229 mm) of travel
Independent Rear Suspension (IRS) with 8 inches (203mm) of travel
Integrated 2 In. Rear Receiver
12.3 ft. Turning Radius
Ground Clearance: 10.5 In. (267 mm)
FRAME/STYLED PARTS:
Full, robotically welded frame design
Side frame rails for rock sliding
OCCUPANT PROTECTION SYSTEM(OPS):
1.75 In. (44.4 mm) Steel Tubular Overhead Structure
Multiple Passenger Handholds
3-pt. Seat Belts
SAE J2194 & OSHA ROPS Certified
OPERATOR STATION:
Bench Seats
Hip Restraint Bars for Driver and Passenger

Sealed Glove Box
Sealed Storage Compartment Under Hood
Two cup holders in dash
Fuel Gauge
Instrument Cluster - Hour Meter, and Seat Belt
12v DC Outlet
FRONTAL PROTECTION:
Integrated Front Bumper Accepts optional front receiver, winch and brush guard

DIMENSIONS(WITH OPS):
113 In. Long x 56.5 In. Wide x 73.5 In. High
PAYLOAD CAPACITY
800 Lb (363 kg) Total Payload Capacity which Includes:
200 Lb (91 kg) Driver,
200 Lb (91 kg) Passenger, and 400 Lb (181 kg) in Cargo Box
Towing Capacity:
1,100 Lb (499kg)
CARGO BOX:
32.3 In. Long x 47.6 In. Wide x 11.7 In. Deep (82 cm x 120.9 cm x 29.7 cm)
8.9 cu. ft (.25 cu.m) Capacity
400 Lbs (181 kg) Box Capacity
Tilting Box , Open from both sides
Hinged (Bottom) Tailgate, Removeable

TIRES:
Front: 25x8-12 Ancla XT (Extreme Terrain Tires)
Rear: 25x10-12 Ancla XT (Extreme Terrain Tires)
SAFETY VIDEO TAPE:
Safety and Operational DVD
Operators Manual
*Engine HP is Provided by the Engine Manufacturer to be Used for Comparison Purposes Only, Actual Operating HP will be Less.

CODE	ATTACHMENT IDENTIFIER	DESCRIPTION	SUGGESTED LIST PRICE USD ($)

Select One Code From Each Required Category

BASE MACHINE

F.O.B. Janesville, Wisconsin

516BM	XUV 550 Green & Yellow Utility and Protection PR *Base Machine Suggested List Price Does Not Include 400 USD Destination Charge.*	8,199.00

DESTINATION

0202	US / CANADA	In Base Price
0230	Australia/New Zealand	Same Price

WHEELS WITH TIRES (FOUR)

1002	Yellow Alloy Wheels Maxxis Bighorn Radial Tires	823.00

XUV 550 Green & Yellow Utility and Protection PR
Continued

CODE	ATTACHMENT IDENTIFIER	DESCRIPTION	SUGGESTED LIST PRICE USD ($)
		DRIVER SEAT	
2001		Bench Seat - Yellow	In Base Price
		CARGO BOX LIFT	
3003		Manual Lift	In Base Price
		OPS/REAR SCREEN/BRAKE/TAILLIGHT	
4002		OPS, XUV 550 with Brake/Taillight	50.00
		PROTECTION/UTILITY AND PROTECTION PACKAGES	
5100		Utility and Protection Package Package Consists of: Front Brushguard, OPS Black Poly Roof, Cargo Box Rail, Rear Bumper, 2 In. Front Reveiver Hitch.	1,064.00
		ATTACHMENTS FOR FIELD CONVERSION	
		Cabs/Roofs/Windshields:	
	BM23373	OPS Full No-Scratch Windshield	531.79
	BM23358	OPS Full Poly Windshield	362.73
	BM23376	OPS Glass Windshield w/ Wiper	714.76
	BM23375	OPS Half Poly Windshield	241.81
	BM23378	OPS Poly Cab *Includes doors and rear panel. OPS Poly Roof and Windshield sold separately.*	2,533.76
	BM23864	OPS Poly Rear Window *Not compatibile with OPS Poly Cab.*	273.91
	BM23397	OPS Poly Roof - Black	329.56
	BM23396	OPS Rear Screen *Includes headrests*	219.36
	LP10314	OPS Side Mirror - Left *Available through Order Zone*	In Catalog
	LP10315	OPS Side Mirror - Right *Available through Order Zone*	In Catalog
	LP37046	OPS Soft Roof - Black *Available through Order Zone*	In Catalog
	BM24382	Replacement Ops Kit XUV 550	384.13
		Cargo Box Options / Storage:	
	BM23849	5 Gallon Pail Holder *Cargo box rails required*	38.51
	BM23371	Box Mat	86.67
	BM23307	Cargo Box Power Lift	770.40

XUV 550 Green & Yellow Utility and Protection PR
Continued

CODE	ATTACHMENT IDENTIFIER	DESCRIPTION	SUGGESTED LIST PRICE USD ($)
		ATTACHMENTS FOR FIELD CONVERSION Continued...	
	BM23384	Cargo Box Wall Extensions *Requires cargo box rails.* *Not compatible with poly cab.*	329.56
	BM23360	Front Rack *Requires Front Brushguard for mounting.*	241.81
	BM24200	Glove Box Lock	12.84
	LP37044	OPS Overhead Organizer - Black *Available through Order Zone*	In Catalog
	LP25929	Rhino Grip XL - Double *Requires cargo box rails.* *Available through Order Zone.*	In Catalog
	LP25928	Rhino Grip XL - Single *Requires cargo box rails.* *Available through Order Zone.*	In Catalog
	BM23385	Tire Rack *Requires cargo box rails.*	231.76
		Carts / Hitches:	
	LPPCT10LXATV	10AT Cart *Available through Order Zone*	In Catalog
	LPPCT17ATJD	17AT Cart *Available through Order Zone.*	In Catalog
	BM23363	2" Front Receiver Hitch and Recovery Loops	109.14
	LPUT21JD	21 Steel Utility Cart *Available through Order Zone*	In Catalog
	PM05101	Ball Mount - 1.875 in. (48mm)	See Parts
	PM05201	Ball Mount - 2 in. (51mm)	See Parts
	BM22290	Drawbar - 2 in. (51mm)	38.51
		Custom & High Performance:	
	BM23438	High Capacity Alternator	714.76
	BM24171	Over-Temperature Sensor Kit	53.50
	BM22703	Seat-Belt Comfort Strap (2) *Also compatible with Deluxe Cab.*	77.04
	BM24376	Speedometer Kit	109.14
	BM23379	Stereo and Speaker Kit *Includes mounting kit only; must choose one of the following three head units to have complete stereo:* *Radio, Heavy Duty AM / FM / WB / AUX (SWJHD1120)* *Radio, Heavy Duty AM / FM / WB / SAT / I-POD (SWJHD1620)* *Radio, AM / FM / WB / CD / AUX / SAT Ready (SWJHD3620)* *Must order head unit through Parts.*	660.19

XUV 550 Green & Yellow Utility and Protection PR
Continued

CODE	ATTACHMENT IDENTIFIER	DESCRIPTION	SUGGESTED LIST PRICE USD ($)
		ATTACHMENTS FOR FIELD CONVERSION Continued...	
		Lights / Signals:	
	BM23369	Backup Alarm	101.66
	BM24013	Beacon Light *Requires OPS Light Kit Switch Bank. Also requires Brake and Tail Light Installation Kit, if 4002 / 4003 option code is not selected, for brake light mounting; OR OPS Poly Roof for roof mounting.*	219.36
	BM24233	Brake and Tail Light Installation Kit *Required to mount Brake and Tail Light Kit.*	33.17
	BM24100	Brake and Tail Light Kit *Requires Brake and Tail Light Installation Kit.*	53.50
	BM23367	Deluxe Light Kit *Includes flashers, turn signals (front & rear), brake & tail lights, and back-up lights. Requires OPS Poly Roof for installation.*	384.13
	BM23442	Hella HID Sport Driving Lights *Requires OPS Light Kit Switch Bank for OPS or poly roof mounting, or Front Brushguard for bumper mounting.*	935.19
	BM24108	Hella Performance Spot Lights *Requires OPS Light Kit Switch Bank for OPS or poly roof mounting, or Front Brushguard for bumper mounting.*	343.47
	BM23370	Horn Kit	97.37
	BM24090	Long Range Light Kit *Requires OPS Light Kit Switch Bank for OPS or Poly Roof mounting; or Front Brushguard for bumper mounting.*	191.53
	BM24016	Mid-Range Light Kit *Requires OPS Light Kit Switch Bank. Compatible with OPS Poly Roofs or on the OPS alone. Can be mounted on the front or rear of the OPS or poly roof. Can not be used for rear mounting on XUV550 S4.*	123.06
	BM24089	OPS Light Kit Switch Bank *Accommodates up to three separate OPS Light Kits.*	67.41
		Protection:	
	BM23309	CV Guards	142.31
	BM23368	Floor Mat	78.11
	BM23365	Front Brushguard	329.56
	BM23394	Front Fender Guards *Requires Front Brushguard*	175.49
	BM24095	Full Underbody Skid Plate	163.71
	BM23362	Rear Bumper	186.19
	LP37036	Vehicle Cover - Black *Available through Order Zone*	In Catalog

XUV 550 Green & Yellow Utility and Protection PR
Continued

CODE	ATTACHMENT IDENTIFIER	DESCRIPTION	SUGGESTED LIST PRICE USD ($)
		ATTACHMENTS FOR FIELD CONVERSION Continued...	
	LP37037	Vehicle Cover - Camo *Available through Order Zone*	In Catalog
	LP37040	Vehicle Cover - Transportable (Black) *Available through Order Zone*	In Catalog
	LP37041	Vehicle Cover - Transportable (Camo) *Available through Order Zone*	In Catalog
		Sprayers / Pressure Washers:	
	LP39965	25 Gallon Bed Sprayer *Available through Order Zone*	In Catalog
	LP39964	45 Gallon Bed Sprayer *Available through Order Zone*	In Catalog
	LP39098	45 Gallon High Performance Bed Sprayer *Available through Order Zone*	In Catalog
	LP20485	45 Gallon Tow-Behind Sprayer *Available through Order Zone*	In Catalog
	LP22885	HP 150 in. Precision Boom *Compatible with HP sprayers.* *Available through Order Zone.*	In Catalog
	LP39963	HP 45 Gallon Sprayer - Tow Behind *Available through Order Zone*	In Catalog
	LP22884	HP Boomless Nozzles *Compatible with HP sprayers.* *Available through Order Zone.*	In Catalog
	LP22911	HP Standard Gator Boom *Compatible with HP sprayers.* *Available through Order Zone.*	In Catalog
		Winch:	
	BM24437	Warn Winch (3000 lbs) *Requires 2 In. Front Receiver Hitch with Recovery Loops for mounting.*	770.40
	BM21392	Winch Accessories Kit	129.47
		SERVICE CONTRACTS - RESIDENTIAL OWNERS/USE	
		Visit http://www.JohnDeere.com/ServicePlans for more information on John Deere Service Contracts. May not be Available in Parts of the U.S., Not Available in Canada. Price may vary due to driving distance and/or time from machine to dealership location.	
		John Deere Extended Service Plan - 2-Year Option *Available for T-Series, HPX and XUV utility vehicles only.)* *2-year extended service plan. (1 year of extended service protection);* *2-years of warranty transportation.*	399.99
		John Deere Extended Service Plan - 3-Year Option *3-year extended service plan. (2 years of extended service protection);* *3-years of warranty transportation.*	569.99

XUV 550 Green & Yellow Utility and Protection PR
Continued

XUV 550 Camo Utility and Protection PR

Equipment for Base Machine

ENGINE:
16 Engine HP*(570cc),
Dynamically tuned carburetor
Two-cylinder, Air-cooled
4-Cycle Gasoline
Full Pressure Lubrication System
Replaceable Single Dry-Type Element Air Cleaner with Remote Intake
4.9 Gallon (18.5L) Fuel Capacity
Solid-state Ignition (12V)
Spark-arresting Muffler
ELECTRICAL:
Electric Start
16 Amp Regulated, 3-Phase Alternator
340 CCA Battery
Two 55 Watt Halogen Headlights
TRANSAXLE/TRANSMISSION:
Continuously Variable Transmission
Full Clutch Enclosure
Two-speed Transaxle
Operator Selectable 4WD
28 mph (45 kph) Maximum Forward Speed
Selectable Four-Wheel Drive System
Front and Rear Hydraulic Disk Brakes with stainless steel rotors
Foot-operated Park brake
Large diameter half shafts with TPE boots
STEERING/SUSPENSION:
Rack and Pinion Steering
Indpendent Front Suspension (IRS) with 9 inches (229 mm) of travel
Independent Rear Suspension (IRS) with 8 inches (203mm) of travel
Integrated 2 In. Rear Receiver
12.3 ft. Turning Radius
Ground Clearance: 10.5 In. (267 mm)
FRAME/STYLED PARTS:
Full, robotically welded frame design
Side frame rails for rock sliding
OCCUPANT PROTECTION SYSTEM(OPS):
1.75 In. (44.4 mm) Steel Tubular Overhead Structure
Multiple Passenger Handholds
3-pt. Seat Belts
SAE J2194 & OSHA ROPS Certified
OPERATOR STATION:
Bench Seats
Hip Restraint Bars for Driver and Passenger

Sealed Glove Box
Sealed Storage Compartment Under Hood
Two cup holders in dash
Fuel Gauge
Instrument Cluster - Hour Meter, and Seat Belt
12v DC Outlet
FRONTAL PROTECTION:
Integrated Front Bumper Accepts optional front receiver, winch and brush guard

DIMENSIONS(WITH OPS):
113 In. Long x 56.5 In. Wide x 73.5 In. High
PAYLOAD CAPACITY
800 Lb (363 kg) Total Payload Capacity which Includes:
200 Lb (91 kg) Driver,
200 Lb (91 kg) Passenger, and 400 Lb (181 kg) in Cargo Box
Towing Capacity:
1,100 Lb (499kg)
CARGO BOX:
32.3 In. Long x 47.6 In. Wide x 11.7 In. Deep (82 cm x 120.9 cm x 29.7 cm)
8.9 cu. ft (.25 cu.m) Capacity
400 Lbs (181 kg) Box Capacity
Tilting Box , Open from both sides
Hinged (Bottom) Tailgate, Removeable

TIRES:
Front: 25x8-12 Ancla XT (Extreme Terrain Tires)
Rear: 25x10-12 Ancla XT (Extreme Terrain Tires)
SAFETY VIDEO TAPE:
Safety and Operational DVD
Operators Manual
*Engine HP is Provided by the Engine Manufacturer to be Used for Comparison Purposes Only, Actual Operating HP will be Less.

CODE	ATTACHMENT IDENTIFIER	DESCRIPTION	SUGGESTED LIST PRICE USD ($)

Select One Code From Each Required Category

BASE MACHINE

F.O.B. Janesville, Wisconsin

516CM	XUV 550 Camo Utility and Protection PR *Base Machine Suggested List Price Does Not Include 400 USD Destination Charge.*	8,749.00

DESTINATION

0202	US / CANADA	In Base Price

WHEELS WITH TIRES (FOUR)

1005	Black Alloy Wheels Maxxis Bighorn Radial Tires	823.00

DRIVER SEAT

XUV 550 Camo Utility and Protection PR

Continued

CODE	ATTACHMENT IDENTIFIER	DESCRIPTION	SUGGESTED LIST PRICE USD ($)
		DRIVER SEAT Continued...	
2004		Bench Seat - Black	In Base Price
		CARGO BOX LIFT	
3003		Manual Lift	In Base Price
		OPS/REAR SCREEN/BRAKE/TAILLIGHT	
4002		OPS, XUV 550 with Brake/Taillight *Must order 5000 option code when ordering 4002 option code.*	50.00
		PROTECTION/UTILITY AND PROTECTION PACKAGES	
5100		Utility and Protection Package Package Consists of: Front Brushguard, OPS Camo Poly Roof, Cargo Box Rail, Rear Bumper, 2 In. Front Reveiver Hitch.	1,449.00
		ATTACHMENTS FOR FIELD CONVERSION	
		Cabs/Roofs/Windshields:	
	BM23373	OPS Full No-Scratch Windshield	531.79
	BM23358	OPS Full Poly Windshield	362.73
	BM23376	OPS Glass Windshield w/ Wiper	714.76
	BM23375	OPS Half Poly Windshield	241.81
	BM23378	OPS Poly Cab *Includes doors and rear panel. OPS Poly Roof and Windshield sold separately.*	2,533.76
	BM23864	OPS Poly Rear Window *Not compatibile with OPS Poly Cab.*	273.91
	BM23397	OPS Poly Roof - Black	329.56
	BM23853	OPS Poly Roof - Camo	714.76
	BM23396	OPS Rear Screen *Includes headrests*	219.36
	LP10314	OPS Side Mirror - Left *Available through Order Zone*	In Catalog
	LP10315	OPS Side Mirror - Right *Available through Order Zone*	In Catalog
	LP37046	OPS Soft Roof - Black *Available through Order Zone*	In Catalog
	LP37047	OPS Soft Roof - Camo *Available through Order Zone*	In Catalog
	BM24382	Replacement Ops Kit XUV 550	384.13

XUV 550 Camo Utility and Protection PR
Continued

CODE	ATTACHMENT IDENTIFIER	DESCRIPTION	SUGGESTED LIST PRICE USD ($)
		ATTACHMENTS FOR FIELD CONVERSION Continued...	
		Cargo Box Options / Storage:	
	BM23849	5 Gallon Pail Holder *Cargo box rails required*	38.51
	BM23371	Box Mat	86.67
	BM23307	Cargo Box Power Lift	770.40
	BM23384	Cargo Box Wall Extensions *Requires cargo box rails.* *Not compatible with poly cab.*	329.56
	BM23360	Front Rack *Requires Front Brushguard for mounting.*	241.81
	BM24200	Glove Box Lock	12.84
	LP37044	OPS Overhead Organizer - Black *Available through Order Zone*	In Catalog
	LP37045	OPS Overhead Organizer - Camo *Available through Order Zone*	In Catalog
	LP25929	Rhino Grip XL - Double *Requires cargo box rails.* *Available through Order Zone.*	In Catalog
	LP25928	Rhino Grip XL - Single *Requires cargo box rails.* *Available through Order Zone.*	In Catalog
	BM23385	Tire Rack *Requires cargo box rails.*	231.76
		Carts / Hitches:	
	LPPCT10LXATV	10AT Cart *Available through Order Zone*	In Catalog
	LPPCT17ATJD	17AT Cart *Available through Order Zone.*	In Catalog
	BM23363	2" Front Receiver Hitch and Recovery Loops	109.14
	LPUT21JD	21 Steel Utility Cart *Available through Order Zone*	In Catalog
	PM05101	Ball Mount - 1.875 in. (48mm)	See Parts
	PM05201	Ball Mount - 2 in. (51mm)	See Parts
	BM22290	Drawbar - 2 in. (51mm)	38.51
		Custom & High Performance:	
	BM23438	High Capacity Alternator	714.76
	BM24171	Over-Temperature Sensor Kit	53.50

XUV 550 Camo Utility and Protection PR
Continued

CODE	ATTACHMENT IDENTIFIER	DESCRIPTION	SUGGESTED LIST PRICE USD ($)
		ATTACHMENTS FOR FIELD CONVERSION Continued...	
	BM22703	Seat-Belt Comfort Strap (2) *Also compatible with Deluxe Cab.*	77.04
	BM24376	Speedometer Kit	109.14
	BM23379	Stereo and Speaker Kit *Includes mounting kit only; must choose one of the following three head units to have complete stereo:* *Radio, Heavy Duty AM / FM / WB / AUX (SWJHD1120)* *Radio, Heavy Duty AM / FM / WB / SAT / I-POD (SWJHD1620)* *Radio, AM / FM / WB / CD / AUX / SAT Ready (SWJHD3620)* *Must order head unit through Parts.*	660.19
		Lights / Signals:	
	BM23369	Backup Alarm	101.66
	BM24013	Beacon Light *Requires OPS Light Kit Switch Bank. Also requires Brake and Tail Light Installation Kit, if 4002 / 4003 option code is not selected, for brake light mounting; OR OPS Poly Roof for roof mounting.*	219.36
	BM24233	Brake and Tail Light Installation Kit *Required to mount Brake and Tail Light Kit.*	33.17
	BM24100	Brake and Tail Light Kit *Requires Brake and Tail Light Installation Kit.*	53.50
	BM23367	Deluxe Light Kit *Includes flashers, turn signals (front & rear), brake & tail lights, and back-up lights. Requires OPS Poly Roof for installation.*	384.13
	BM23442	Hella HID Sport Driving Lights *Requires OPS Light Kit Switch Bank for OPS or poly roof mounting, or Front Brushguard for bumper mounting.*	935.19
	BM24108	Hella Performance Spot Lights *Requires OPS Light Kit Switch Bank for OPS or poly roof mounting, or Front Brushguard for bumper mounting.*	343.47
	BM23370	Horn Kit	97.37
	BM24090	Long Range Light Kit *Requires OPS Light Kit Switch Bank for OPS or Poly Roof mounting; or Front Brushguard for bumper mounting.*	191.53
	BM24016	Mid-Range Light Kit *Requires OPS Light Kit Switch Bank. Compatible with OPS Poly Roofs or on the OPS alone. Can be mounted on the front or rear of the OPS or poly roof. Can not be used for rear mounting on XUV550 S4.*	123.06
	BM24089	OPS Light Kit Switch Bank *Accommodates up to three separate OPS Light Kits.*	67.41
		Protection:	
	BM23309	CV Guards	142.31
	BM23368	Floor Mat	78.11
	BM23365	Front Brushguard	329.56

XUV 550 Camo Utility and Protection PR
Continued

CODE	ATTACHMENT IDENTIFIER	DESCRIPTION	SUGGESTED LIST PRICE USD ($)
		ATTACHMENTS FOR FIELD CONVERSION Continued...	
	BM23394	Front Fender Guards *Requires Front Brushguard*	175.49
	BM24095	Full Underbody Skid Plate	163.71
	BM23362	Rear Bumper	186.19
	LP37036	Vehicle Cover - Black *Available through Order Zone*	In Catalog
	LP37037	Vehicle Cover - Camo *Available through Order Zone*	In Catalog
	LP37040	Vehicle Cover - Transportable (Black) *Available through Order Zone*	In Catalog
	LP37041	Vehicle Cover - Transportable (Camo) *Available through Order Zone*	In Catalog
		Sprayers / Pressure Washers:	
	LP39965	25 Gallon Bed Sprayer *Available through Order Zone*	In Catalog
	LP39964	45 Gallon Bed Sprayer *Available through Order Zone*	In Catalog
	LP39098	45 Gallon High Performance Bed Sprayer *Available through Order Zone*	In Catalog
	LP20485	45 Gallon Tow-Behind Sprayer *Available through Order Zone*	In Catalog
	LP22885	HP 150 in. Precision Boom *Compatible with HP sprayers.* *Available through Order Zone.*	In Catalog
	LP39963	HP 45 Gallon Sprayer - Tow Behind *Available through Order Zone*	In Catalog
	LP22884	HP Boomless Nozzles *Compatible with HP sprayers.* *Available through Order Zone.*	In Catalog
	LP22911	HP Standard Gator Boom *Compatible with HP sprayers.* *Available through Order Zone.*	In Catalog
		Winch:	
	BM24437	Warn Winch (3000 lbs) *Requires 2 In. Front Receiver Hitch with Recovery Loops for mounting.*	770.40
	BM21392	Winch Accessories Kit	129.47

SERVICE CONTRACTS - RESIDENTIAL OWNERS/USE

Visit http://www.JohnDeere.com/ServicePlans for more information on John Deere Service Contracts. May not be Available in Parts of the U.S., Not Available in Canada. Price may vary due to driving distance and/or time

XUV 550 Camo Utility and Protection PR

Continued

CODE	ATTACHMENT IDENTIFIER	DESCRIPTION	SUGGESTED LIST PRICE USD ($)
		SERVICE CONTRACTS - RESIDENTIAL OWNERS/USE Continued...	
		from machine to dealership location.	
		John Deere Extended Service Plan - 2-Year Option *Available for T-Series, HPX and XUV utility vehicles only.)* *2-year extended service plan. (1 year of extended service protection);* *2-years of warranty transportation.*	399.99
		John Deere Extended Service Plan - 3-Year Option *3-year extended service plan. (2 years of extended service protection);* *3-years of warranty transportation.*	569.99

XUV 550 S4 Green & Yellow PR

Equipment for Base Machine

ENGINE:
16 Engine HP*(570cc), Dynamically tuned carburetor
Two-cylinder, Air-cooled 4-Cycle Gasoline
Full Pressure Lubrication System
Replaceable Single Dry-Type Element Air Cleaner with Remote Intake
4.9 Gallon (18.5L) Fuel Capacity
Solid-state Ignition (12V)
Spark-arresting Muffler
ELECTRICAL:
Electric Start
16 Amp Regulated, 3-Phase Alternator
340 CCA Battery
Two 55 Watt Halogen Headlights
TRANSAXLE/TRANSMISSION:
Continuously Variable Transmission
Full Clutch Enclosure
Two-speed Transaxle
Operator Selectable 4WD
28 mph (45 kph) Maximum Forward Speed
Selectable Four-Wheel Drive System
Front and Rear Hydraulic Disk Brakes with stainless steel rotors
Foot-operated Park brake
Large diameter half shafts with TPE boots
STEERING/SUSPENSION:
Rack and Pinion Steering
Indpendent Front Suspension (IRS) with 9 inches (229 mm) of travel
Independent Rear Suspension (IRS) with 8 inches (203mm) of travel
Integrated 2 In. Rear Receiver
19.7 ft. Turning Radius -- TBD
Ground Clearance: 9.3 In. (236 mm)
FRAME/STYLED PARTS:
Full, robotically welded frame design
Side frame rails for rock sliding
OCCUPANT PROTECTION SYSTEM(OPS):
1.75 In. (44.4 mm) Steel Tubular Overhead Structure
Multiple Passenger Handholds
3-pt. Seat Belts
SAE J2194 & OSHA ROPS Certified
OPERATOR STATION:
Bench Seats
Hip Restraint Bars for Driver and Passenger

Sealed Glove Box
Sealed Storage Compartment Under Hood
Fuel Gauge
Instrument Cluster - Hour Meter, and Seat Belt
12v DC Outlet
FRONTAL PROTECTION:
Integrated Front Bumper Accepts optional front receiver, winch and brush guard

DIMENSIONS(WITH OPS):
144 In. Long x 56.5 In. Wide x 74 In. High
PAYLOAD CAPACITY
1200 Lb (544 kg) Total Payload Capacity which Includes:
200 Lb (91 kg) Driver,
600 Lb (273 kg) Passenger, and 400 Lb (181 kg) in Cargo Box
Towing Capacity:
1,100 Lb (499kg)
CARGO BOX:
32.3 In. Long x 47.6 In. Wide x 11.7 In. Deep (82 cm x 120.9 cm x 29.7 cm)
8.9 cu. ft (.25 cu.m) Capacity
400 Lbs (181 kg) Box Capacity
Tilting Box , Open from both sides
Hinged (Bottom) Tailgate, Removeable
CONVERTIBLE CARGO RACK:
23.5 In. Long x 38.8 In. Wide x 8.1 In. Deep (59.7cm x 98.6 cm x 20.6 cm)
4.3 cu. ft (0.12 cu.m) Capacity
200 Lbs (90.7 kg) Rack Capacity

TIRES:
Front: 25x8-12 Terra Hawk (All Terrain Tires)
Rear: 25x10-12 Terra Hawk (All Terrain Tires)
SAFETY VIDEO TAPE:
Safety and Operational DVD
Operators Manual
*Engine HP is Provided by the Engine Manufacturer to be Used for Comparison Purposes Only, Actual Operating HP will be Less.

CODE	ATTACHMENT IDENTIFIER	DESCRIPTION	SUGGESTED LIST PRICE USD ($)

Select One Code From Each Required Category

BASE MACHINE

F.O.B. Janesville, Wisconsin

515DM	XUV 550 S4 Green & Yellow PR *Base Machine Suggested List Price Does Not Include 500 USD Destination Charge.*	9,599.00

DESTINATION

0202	US / CANADA	In Base Price

WHEELS WITH TIRES (FOUR)

1000	Yellow Steel Wheels Terra Hawk All Terrain Tires	Same Price

XUV 550 S4 Green & Yellow PR

Continued

CODE	ATTACHMENT IDENTIFIER	DESCRIPTION	SUGGESTED LIST PRICE USD ($)
		CARGO BOX LIFT	
3003		Manual Lift	In Base Price
		OPS/REAR SCREEN/BRAKE/TAILLIGHT	
4000		OPS	In Base Price
		PROTECTION/UTILITY AND PROTECTION PACKAGES	
5110		Less Utility and Protection Package	In Base Price
		STORAGE	
6010		Less Front Seat Storage	In Base Price
		ATTACHMENTS FOR FIELD CONVERSION	
		Cabs/Roofs/Windshields:	
	BM23373	OPS Full No-Scratch Windshield	531.79
	BM23358	OPS Full Poly Windshield	362.73
	BM23376	OPS Glass Windshield w/ Wiper	714.76
	BM23375	OPS Half Poly Windshield	241.81
	BM24114	OPS Poly Cab - S4 *Includes front and rear doors, and rear panel. OPS Poly Roof and Windshield sold separately.*	4,297.11
	BM23398	OPS S4 Poly Roof - Black	494.34
	LP10314	OPS Side Mirror - Left *Available through Order Zone*	In Catalog
	LP10315	OPS Side Mirror - Right *Available through Order Zone*	In Catalog
	LP37048	OPS Soft Roof (S4) - Black *Available through Order Zone*	In Catalog
	BM24687	Replacement OPS Kit XUV 550 S4 *Includes Front and Rear OPS.*	765.06
		Cargo Box Options / Storage:	
	BM23849	5 Gallon Pail Holder *Cargo box rails required*	38.51
	BM23371	Box Mat	86.67
	BM23307	Cargo Box Power Lift	770.40
	BM23526	Cargo Box Rails	109.14
	BM23384	Cargo Box Wall Extensions *Requires cargo box rails.* *Not compatible with poly cab.*	329.56
	BM24094	Cargo Rack Screen	65.27

XUV 550 S4 Green & Yellow PR
Continued

CODE	ATTACHMENT IDENTIFIER	DESCRIPTION	SUGGESTED LIST PRICE USD ($)
		ATTACHMENTS FOR FIELD CONVERSION Continued...	
	BM23360	Front Rack *Requires Front Brushguard for mounting.*	241.81
	BM24200	Glove Box Lock	12.84
	LP37044	OPS Overhead Organizer - Black *Available through Order Zone*	In Catalog
	LP25929	Rhino Grip XL - Double *Requires cargo box rails.* *Available through Order Zone.*	In Catalog
	LP25928	Rhino Grip XL - Single *Requires cargo box rails.* *Available through Order Zone.*	In Catalog
	BM23385	Tire Rack *Requires cargo box rails.*	231.76
	BM23874	Underseat Storage	109.14
	BM24096	Vise Mount	53.50
		Carts / Hitches:	
	LPPCT10LXATV	10AT Cart *Available through Order Zone*	In Catalog
	LPPCT17ATJD	17AT Cart *Available through Order Zone.*	In Catalog
	BM23363	2" Front Receiver Hitch and Recovery Loops	109.14
	LPUT21JD	21 Steel Utility Cart *Available through Order Zone*	In Catalog
	PM05101	Ball Mount - 1.875 in. (48mm)	See Parts
	PM05201	Ball Mount - 2 in. (51mm)	See Parts
	BM22290	Drawbar - 2 in. (51mm)	38.51
		Custom & High Performance:	
	BM23438	High Capacity Alternator	714.76
	BM24171	Over-Temperature Sensor Kit	53.50
	BM22703	Seat-Belt Comfort Strap (2) *Also compatible with Deluxe Cab.*	77.04
	BM24376	Speedometer Kit	109.14
	BM23379	Stereo and Speaker Kit *Includes mounting kit only; must choose one of the following three head units to have complete stereo:* *Radio, Heavy Duty AM / FM / WB / AUX (SWJHD1120)* *Radio, Heavy Duty AM / FM / WB / SAT / I-POD (SWJHD1620)* *Radio, AM / FM / WB / CD / AUX / SAT Ready (SWJHD3620)* *Must order head unit through Parts.*	660.19

XUV 550 S4 Green & Yellow PR
Continued

CODE	ATTACHMENT IDENTIFIER	DESCRIPTION	SUGGESTED LIST PRICE USD ($)
		ATTACHMENTS FOR FIELD CONVERSION Continued...	
		Lights / Signals:	
	BM23369	Backup Alarm	101.66
	BM24013	Beacon Light *Requires OPS Light Kit Switch Bank. Also requires Brake and Tail Light Installation Kit, if 4002 / 4003 option code is not selected, for brake light mounting; OR OPS Poly Roof for roof mounting.*	219.36
	BM24233	Brake and Tail Light Installation Kit *Required to mount Brake and Tail Light Kit.*	33.17
	BM24100	Brake and Tail Light Kit *Requires Brake and Tail Light Installation Kit.*	53.50
	BM23367	Deluxe Light Kit *Includes flashers, turn signals (front & rear), brake & tail lights, and back-up lights. Requires OPS Poly Roof for installation.*	384.13
	BM23442	Hella HID Sport Driving Lights *Requires OPS Light Kit Switch Bank for OPS or poly roof mounting, or Front Brushguard for bumper mounting.*	935.19
	BM24108	Hella Performance Spot Lights *Requires OPS Light Kit Switch Bank for OPS or poly roof mounting, or Front Brushguard for bumper mounting.*	343.47
	BM23370	Horn Kit	97.37
	BM24090	Long Range Light Kit *Requires OPS Light Kit Switch Bank for OPS or Poly Roof mounting; or Front Brushguard for bumper mounting.*	191.53
	BM24016	Mid-Range Light Kit *Requires OPS Light Kit Switch Bank. Compatible with OPS Poly Roofs or on the OPS alone. Can be mounted on the front or rear of the OPS or poly roof. Can not be used for rear mounting on XUV550 S4.*	123.06
	BM24273	Mid-Range Light Kit (rear XUV550 S4 Only) *Requires OPS Light Kit Switch Bank. Compatible with OPS Poly Roofs, or on the OPS alone.*	123.06
	BM24089	OPS Light Kit Switch Bank *Accommodates up to three separate OPS Light Kits.*	67.41
		Protection:	
	BM23309	CV Guards	142.31
	BM23884	Floor Mat - S4 *Front and rear mats.*	163.71
	BM23365	Front Brushguard	329.56
	BM23394	Front Fender Guards *Requires Front Brushguard*	175.49
	BM23362	Rear Bumper	186.19
	LP37038	Vehicle Cover (S4) - Black *Available through Order Zone*	In Catalog

XUV 550 S4 Green & Yellow PR

Continued

CODE	ATTACHMENT IDENTIFIER	DESCRIPTION	SUGGESTED LIST PRICE USD ($)
		ATTACHMENTS FOR FIELD CONVERSION Continued...	
	LP37039	Vehicle Cover (S4) - Camo *Available through Order Zone*	In Catalog
	LP37042	Vehicle Cover (S4) - Transportable (Black) *Available through Order Zone*	In Catalog
	LP37043	Vehicle Cover (S4) - Transportable (Camo) *Available through Order Zone*	In Catalog
		Sprayers / Pressure Washers:	
	LP39965	25 Gallon Bed Sprayer *Available through Order Zone*	In Catalog
	LP39964	45 Gallon Bed Sprayer *Available through Order Zone*	In Catalog
	LP39098	45 Gallon High Performance Bed Sprayer *Available through Order Zone*	In Catalog
	LP20485	45 Gallon Tow-Behind Sprayer *Available through Order Zone*	In Catalog
	LP22885	HP 150 in. Precision Boom *Compatible with HP sprayers.* *Available through Order Zone.*	In Catalog
	LP39963	HP 45 Gallon Sprayer - Tow Behind *Available through Order Zone*	In Catalog
	LP22884	HP Boomless Nozzles *Compatible with HP sprayers.* *Available through Order Zone.*	In Catalog
	LP22911	HP Standard Gator Boom *Compatible with HP sprayers.* *Available through Order Zone.*	In Catalog
		Winch:	
	BM24019	Warn Winch (3,000 lbs) - S4 *Requires 2 In. Front Receiver Hitch with Recovery Loops for mounting.*	880.61
	BM21392	Winch Accessories Kit	129.47
		SERVICE CONTRACTS - RESIDENTIAL OWNERS/USE	
		Visit http://www.JohnDeere.com/ServicePlans for more information on John Deere Service Contracts. May not be Available in Parts of the U.S., Not Available in Canada. Price may vary due to driving distance and/or time from machine to dealership location.	
		John Deere Extended Service Plan - 2-Year Option *Available for T-Series, HPX and XUV utility vehicles only.)* *2-year extended service plan. (1 year of extended service protection);* *2-years of warranty transportation.*	399.99
		John Deere Extended Service Plan - 3-Year Option *3-year extended service plan. (2 years of extended service protection);* *3-years of warranty transportation.*	569.99

XUV 550 S4 Green & Yellow PR
Continued

XUV 550 S4 Green & Yellow Utility and Protection PR

Equipment for Base Machine

ENGINE:
16 Engine HP*(570cc),
Dynamically tuned carburetor
Two-cylinder, Air-cooled
4-Cycle Gasoline
Full Pressure Lubrication System
Replaceable Single Dry-Type Element Air Cleaner with Remote Intake
4.9 Gallon (18.5L) Fuel Capacity
Solid-state Ignition (12V)
Spark-arresting Muffler
ELECTRICAL:
Electric Start
16 Amp Regulated, 3-Phase Alternator
340 CCA Battery
Two 55 Watt Halogen Headlights
TRANSAXLE/TRANSMISSION:
Continuously Variable Transmission
Full Clutch Enclosure
Two-speed Transaxle
Operator Selectable 4WD
28 mph (45 kph) Maximum Forward Speed
Selectable Four-Wheel Drive System
Front and Rear Hydraulic Disk Brakes with stainless steel rotors
Foot-operated Park brake
Large diameter half shafts with TPE boots
STEERING/SUSPENSION:
Rack and Pinion Steering
Indpendent Front Suspension (IRS) with 9 inches (229 mm) of travel
Independent Rear Suspension (IRS) with 8 inches (203mm) of travel
Integrated 2 In. Rear Receiver
19.7 ft. Turning Radius -- TBD
Ground Clearance: 9.3 In. (236 mm)
FRAME/STYLED PARTS:
Full, robotically welded frame design
Side frame rails for rock sliding
OCCUPANT PROTECTION SYSTEM(OPS):
1.75 In. (44.4 mm) Steel Tubular Overhead Structure
Multiple Passenger Handholds
3-pt. Seat Belts
SAE J2194 & OSHA ROPS Certified
OPERATOR STATION:
Bench Seats
Hip Restraint Bars for Driver and Passenger

Sealed Glove Box
Sealed Storage Compartment Under Hood
Fuel Gauge
Instrument Cluster - Hour Meter, and Seat Belt
12v DC Outlet
FRONTAL PROTECTION:
Integrated Front Bumper
Accepts optional front receiver, winch and brush guard

DIMENSIONS(WITH OPS):
144 In. Long x 56.5 In. Wide x 74 In. High
PAYLOAD CAPACITY
1200 Lb (544 kg) Total Payload Capacity which Includes:
200 Lb (91 kg) Driver,
600 Lb (273 kg) Passenger, and
400 Lb (181 kg) in Cargo Box
Towing Capacity:
1,100 Lb (499kg)
CARGO BOX:
32.3 In. Long x 47.6 In. Wide x 11.7 In. Deep
(82 cm x 120.9 cm x 29.7 cm)
8.9 cu. ft (.25 cu.m) Capacity
400 Lbs (181 kg) Box Capacity
Tilting Box , Open from both sides
Hinged (Bottom) Tailgate, Removeable
CONVERTIBLE CARGO RACK:
23.5 In. Long x 38.8 In. Wide x 8.1 In. Deep
(59.7cm x 98.6 cm x 20.6 cm)
4.3 cu. ft (0.12 cu.m) Capacity
200 Lbs (90.7 kg) Rack Capacity

TIRES:
Front: 25x8-12 Terra Hawk (All Terrain Tires)
Rear: 25x10-12 Terra Hawk (All Terrain Tires)
SAFETY VIDEO TAPE:
Safety and Operational DVD
Operators Manual
*Engine HP is Provided by the Engine Manufacturer to be Used for Comparison Purposes Only, Actual Operating HP will be Less.

CODE	ATTACHMENT IDENTIFIER	DESCRIPTION	SUGGESTED LIST PRICE USD ($)

Select One Code From Each Required Category

BASE MACHINE

F.O.B. Janesville, Wisconsin

515BM	XUV 550 S4 Green & Yellow Utility and Protection PR *Base Machine Suggested List Price Does Not Include 500 USD Destination Charge.*	9,599.00

DESTINATION

0202	US / CANADA	In Base Price
0230	Australia/New Zealand	Same Price

WHEELS WITH TIRES (FOUR)

XUV 550 S4 Green & Yellow Utility and Protection PR
Continued

CODE	ATTACHMENT IDENTIFIER	DESCRIPTION	SUGGESTED LIST PRICE USD ($)
		WHEELS WITH TIRES (FOUR) Continued...	
1002		Yellow Alloy Wheels Maxxis Bighorn Radial Tires	823.00
		CARGO BOX LIFT	
3003		Manual Lift	In Base Price
		OPS/REAR SCREEN/BRAKE/TAILLIGHT	
4002		OPS, XUV 550 with Brake/Taillight	50.00
		PROTECTION/UTILITY AND PROTECTION PACKAGES	
5100		Utility and Protection Package Package Consists of: Front Brushguard, OPS S4 Black Poly Roof, Cargo Box Rail , 5 Gallon Pail Holder, Rear Bumper, 2 In. Front Reveiver Hitch.	1,267.00
		STORAGE	
6010		Less Front Seat Storage	In Base Price
		ATTACHMENTS FOR FIELD CONVERSION	
		Cabs/Roofs/Windshields:	
	BM23373	OPS Full No-Scratch Windshield	531.79
	BM23358	OPS Full Poly Windshield	362.73
	BM23376	OPS Glass Windshield w/ Wiper	714.76
	BM23375	OPS Half Poly Windshield	241.81
	BM24114	OPS Poly Cab - S4 *Includes front and rear doors, and rear panel. OPS Poly Roof and Windshield sold separately.*	4,297.11
	BM23398	OPS S4 Poly Roof - Black	494.34
	LP10314	OPS Side Mirror - Left *Available through Order Zone*	In Catalog
	LP10315	OPS Side Mirror - Right *Available through Order Zone*	In Catalog
	LP37048	OPS Soft Roof (S4) - Black *Available through Order Zone*	In Catalog
	BM24687	Replacement OPS Kit XUV 550 S4 *Includes Front and Rear OPS.*	765.06
		Cargo Box Options / Storage:	
	BM23849	5 Gallon Pail Holder *Cargo box rails required*	38.51
	BM23371	Box Mat	86.67
	BM23307	Cargo Box Power Lift	770.40

XUV 550 S4 Green & Yellow Utility and Protection PR
Continued

CODE	ATTACHMENT IDENTIFIER	DESCRIPTION	SUGGESTED LIST PRICE USD ($)
		ATTACHMENTS FOR FIELD CONVERSION Continued...	
	BM23384	Cargo Box Wall Extensions *Requires cargo box rails.* *Not compatible with poly cab.*	329.56
	BM24094	Cargo Rack Screen	65.27
	BM23360	Front Rack *Requires Front Brushguard for mounting.*	241.81
	BM24200	Glove Box Lock	12.84
	LP37044	OPS Overhead Organizer - Black *Available through Order Zone*	In Catalog
	LP25929	Rhino Grip XL - Double *Requires cargo box rails.* *Available through Order Zone.*	In Catalog
	LP25928	Rhino Grip XL - Single *Requires cargo box rails.* *Available through Order Zone.*	In Catalog
	BM23385	Tire Rack *Requires cargo box rails.*	231.76
	BM23874	Underseat Storage	109.14
	BM24096	Vise Mount	53.50
		Carts / Hitches:	
	LPPCT10LXATV	10AT Cart *Available through Order Zone*	In Catalog
	LPPCT17ATJD	17AT Cart *Available through Order Zone.*	In Catalog
	BM23363	2" Front Receiver Hitch and Recovery Loops	109.14
	LPUT21JD	21 Steel Utility Cart *Available through Order Zone*	In Catalog
	PM05101	Ball Mount - 1.875 in. (48mm)	See Parts
	PM05201	Ball Mount - 2 in. (51mm)	See Parts
	BM22290	Drawbar - 2 in. (51mm)	38.51
		Custom & High Performance:	
	BM23438	High Capacity Alternator	714.76
	BM24171	Over-Temperature Sensor Kit	53.50
	BM22703	Seat-Belt Comfort Strap (2) *Also compatible with Deluxe Cab.*	77.04
	BM24376	Speedometer Kit	109.14

XUV 550 S4 Green & Yellow Utility and Protection PR
Continued

CODE	ATTACHMENT IDENTIFIER	DESCRIPTION	SUGGESTED LIST PRICE USD ($)
		ATTACHMENTS FOR FIELD CONVERSION Continued...	
	BM23379	Stereo and Speaker Kit *Includes mounting kit only; must choose one of the following three head units to have complete stereo:* *Radio, Heavy Duty AM / FM / WB / AUX (SWJHD1120)* *Radio, Heavy Duty AM / FM / WB / SAT / I-POD (SWJHD1620)* *Radio, AM / FM / WB / CD / AUX / SAT Ready (SWJHD3620)* *Must order head unit through Parts.*	660.19
		Lights / Signals:	
	BM23369	Backup Alarm	101.66
	BM24013	Beacon Light *Requires OPS Light Kit Switch Bank. Also requires Brake and Tail Light Installation Kit, if 4002 / 4003 option code is not selected, for brake light mounting; OR OPS Poly Roof for roof mounting.*	219.36
	BM24233	Brake and Tail Light Installation Kit *Required to mount Brake and Tail Light Kit.*	33.17
	BM24100	Brake and Tail Light Kit *Requires Brake and Tail Light Installation Kit.*	53.50
	BM23367	Deluxe Light Kit *Includes flashers, turn signals (front & rear), brake & tail lights, and back-up lights. Requires OPS Poly Roof for installation.*	384.13
	BM23442	Hella HID Sport Driving Lights *Requires OPS Light Kit Switch Bank for OPS or poly roof mounting, or Front Brushguard for bumper mounting.*	935.19
	BM24108	Hella Performance Spot Lights *Requires OPS Light Kit Switch Bank for OPS or poly roof mounting, or Front Brushguard for bumper mounting.*	343.47
	BM23370	Horn Kit	97.37
	BM24090	Long Range Light Kit *Requires OPS Light Kit Switch Bank for OPS or Poly Roof mounting; or Front Brushguard for bumper mounting.*	191.53
	BM24016	Mid-Range Light Kit *Requires OPS Light Kit Switch Bank. Compatible with OPS Poly Roofs or on the OPS alone. Can be mounted on the front or rear of the OPS or poly roof. Can not be used for rear mounting on XUV550 S4.*	123.06
	BM24273	Mid-Range Light Kit (rear XUV550 S4 Only) *Requires OPS Light Kit Switch Bank. Compatible with OPS Poly Roofs, or on the OPS alone.*	123.06
	BM24089	OPS Light Kit Switch Bank *Accommodates up to three separate OPS Light Kits.*	67.41
		Protection:	
	BM23309	CV Guards	142.31
	BM23884	Floor Mat - S4 *Front and rear mats.*	163.71
	BM23365	Front Brushguard	329.56

XUV 550 S4 Green & Yellow Utility and Protection PR
Continued

CODE	ATTACHMENT IDENTIFIER	DESCRIPTION	SUGGESTED LIST PRICE USD ($)
		ATTACHMENTS FOR FIELD CONVERSION Continued...	
	BM23394	Front Fender Guards *Requires Front Brushguard*	175.49
	BM23362	Rear Bumper	186.19
	LP37038	Vehicle Cover (S4) - Black *Available through Order Zone*	In Catalog
	LP37039	Vehicle Cover (S4) - Camo *Available through Order Zone*	In Catalog
	LP37042	Vehicle Cover (S4) - Transportable (Black) *Available through Order Zone*	In Catalog
	LP37043	Vehicle Cover (S4) - Transportable (Camo) *Available through Order Zone*	In Catalog
		Sprayers / Pressure Washers:	
	LP39965	25 Gallon Bed Sprayer *Available through Order Zone*	In Catalog
	LP39964	45 Gallon Bed Sprayer *Available through Order Zone*	In Catalog
	LP39098	45 Gallon High Performance Bed Sprayer *Available through Order Zone*	In Catalog
	LP20485	45 Gallon Tow-Behind Sprayer *Available through Order Zone*	In Catalog
	LP22885	HP 150 in. Precision Boom *Compatible with HP sprayers.* *Available through Order Zone.*	In Catalog
	LP39963	HP 45 Gallon Sprayer - Tow Behind *Available through Order Zone*	In Catalog
	LP22884	HP Boomless Nozzles *Compatible with HP sprayers.* *Available through Order Zone.*	In Catalog
	LP22911	HP Standard Gator Boom *Compatible with HP sprayers.* *Available through Order Zone.*	In Catalog
		Winch:	
	BM24019	Warn Winch (3,000 lbs) - S4 *Requires 2 In. Front Receiver Hitch with Recovery Loops for mounting.*	880.61
	BM21392	Winch Accessories Kit	129.47

SERVICE CONTRACTS - RESIDENTIAL OWNERS/USE

Visit http://www.JohnDeere.com/ServicePlans for more information on John Deere Service Contracts. May not be Available in Parts of the U.S., Not Available in Canada. Price may vary due to driving distance and/or time from machine to dealership location.

XUV 550 S4 Green & Yellow Utility and Protection PR

Continued

CODE	ATTACHMENT IDENTIFIER	DESCRIPTION	SUGGESTED LIST PRICE USD ($)
		SERVICE CONTRACTS - RESIDENTIAL OWNERS/USE Continued...	
		John Deere Extended Service Plan - 2-Year Option *Available for T-Series, HPX and XUV utility vehicles only.)* *2-year extended service plan. (1 year of extended service protection);* *2-years of warranty transportation.*	399.99
		John Deere Extended Service Plan - 3-Year Option *3-year extended service plan. (2 years of extended service protection);* *3-years of warranty transportation.*	569.99

XUV 550 S4 Camo PR

Equipment for Base Machine

ENGINE:
16 Engine HP*(570cc), Dynamically tuned carburetor
Two-cylinder, Air-cooled 4-Cycle Gasoline
Full Pressure Lubrication System
Replaceable Single Dry-Type Element Air Cleaner with Remote Intake
4.9 Gallon (18.5L) Fuel Capacity
Solid-state Ignition (12V)
Spark-arresting Muffler
ELECTRICAL:
Electric Start
16 Amp Regulated, 3-Phase Alternator
340 CCA Battery
Two 55 Watt Halogen Headlights
TRANSAXLE/TRANSMISSION:
Continuously Variable Transmission
Full Clutch Enclosure
Two-speed Transaxle
Operator Selectable 4WD
28 mph (45 kph) Maximum Forward Speed
Selectable Four-Wheel Drive System
Front and Rear Hydraulic Disk Brakes with stainless steel rotors
Foot-operated Park brake
Large diameter half shafts with TPE boots
STEERING/SUSPENSION:
Rack and Pinion Steering
Indpendent Front Suspension (IRS) with 9 inches (229 mm) of travel
Independent Rear Suspension (IRS) with 8 inches (203mm) of travel
Integrated 2 In. Rear Receiver
19.7 ft. Turning Radius -- TBD
Ground Clearance: 9.3 In. (236 mm)
FRAME/STYLED PARTS:
Full, robotically welded frame design
Side frame rails for rock sliding
OCCUPANT PROTECTION SYSTEM(OPS):
1.75 In. (44.4 mm) Steel Tubular Overhead Structure
Multiple Passenger Handholds
3-pt. Seat Belts
SAE J2194 & OSHA ROPS Certified
OPERATOR STATION:
Bench Seats
Hip Restraint Bars for Driver and Passenger

Sealed Glove Box
Sealed Storage Compartment Under Hood
Fuel Gauge
Instrument Cluster - Hour Meter, and Seat Belt
12v DC Outlet
FRONTAL PROTECTION:
Integrated Front Bumper Accepts optional front receiver, winch and brush guard

DIMENSIONS(WITH OPS):
144 In. Long x 56.5 In. Wide x 74 In. High
PAYLOAD CAPACITY
1200 Lb (544 kg) Total Payload Capacity which Includes:
200 Lb (91 kg) Driver,
600 Lb (273 kg) Passenger, and 400 Lb (181 kg) in Cargo Box
Towing Capacity:
1,100 Lb (499kg)
CARGO BOX:
32.3 In. Long x 47.6 In. Wide x 11.7 In. Deep (82 cm x 120.9 cm x 29.7 cm)
8.9 cu. ft (.25 cu.m) Capacity
400 Lbs (181 kg) Box Capacity
Tilting Box , Open from both sides
Hinged (Bottom) Tailgate, Removeable
CONVERTIBLE CARGO RACK:
23.5 In. Long x 38.8 In. Wide x 8.1 In. Deep (59.7cm x 98.6 cm x 20.6 cm)
4.3 cu. ft (0.12 cu.m) Capacity
200 Lbs (90.7 kg) Rack Capacity

TIRES:
Front: 25x8-12 Terra Hawk (All Terrain Tires)
Rear: 25x10-12 Terra Hawk (All Terrain Tires)
SAFETY VIDEO TAPE:
Safety and Operational DVD
Operators Manual
*Engine HP is Provided by the Engine Manufacturer to be Used for Comparison Purposes Only, Actual Operating HP will be Less.

CODE	ATTACHMENT IDENTIFIER	DESCRIPTION	SUGGESTED LIST PRICE USD ($)

Select One Code From Each Required Category

BASE MACHINE

F.O.B. Janesville, Wisconsin

515EM	XUV 550 S4 Camo PR *Base Machine Suggested List Price Does Not Include 500 USD Destination Charge.*	10,149.00

DESTINATION

0202	US / CANADA	In Base Price

WHEELS WITH TIRES (FOUR)

1004	Black Steel Wheels Ancia M-T Extreme Terrain Tire	In Base Price

XUV 550 S4 Camo PR

Continued

CODE	ATTACHMENT IDENTIFIER	DESCRIPTION	SUGGESTED LIST PRICE USD ($)
		CARGO BOX LIFT	
3003		Manual Lift	In Base Price
		OPS/REAR SCREEN/BRAKE/TAILLIGHT	
4000		OPS	In Base Price
		PROTECTION/UTILITY AND PROTECTION PACKAGES	
5110		Less Utility and Protection Package	In Base Price
		STORAGE	
6010		Less Front Seat Storage	In Base Price
		ATTACHMENTS FOR FIELD CONVERSION	
		Cabs/Roofs/Windshields:	
	BM23373	OPS Full No-Scratch Windshield	531.79
	BM23358	OPS Full Poly Windshield	362.73
	BM23376	OPS Glass Windshield w/ Wiper	714.76
	BM23375	OPS Half Poly Windshield	241.81
	BM24114	OPS Poly Cab - S4 *Includes front and rear doors, and rear panel. OPS Poly Roof and Windshield sold separately.*	4,297.11
	BM23398	OPS S4 Poly Roof - Black	494.34
	LP10314	OPS Side Mirror - Left *Available through Order Zone*	In Catalog
	LP10315	OPS Side Mirror - Right *Available through Order Zone*	In Catalog
	LP37048	OPS Soft Roof (S4) - Black *Available through Order Zone*	In Catalog
	LP37049	OPS Soft Roof (S4) - Camo *Available through Order Zone*	In Catalog
	BM24687	Replacement OPS Kit XUV 550 S4 *Includes Front and Rear OPS.*	765.06
		Cargo Box Options / Storage:	
	BM23849	5 Gallon Pail Holder *Cargo box rails required*	38.51
	BM23371	Box Mat	86.67
	BM23307	Cargo Box Power Lift	770.40
	BM23526	Cargo Box Rails	109.14

XUV 550 S4 Camo PR
Continued

CODE	ATTACHMENT IDENTIFIER	DESCRIPTION	SUGGESTED LIST PRICE USD ($)
		ATTACHMENTS FOR FIELD CONVERSION Continued...	
	BM23384	Cargo Box Wall Extensions *Requires cargo box rails.* *Not compatible with poly cab.*	329.56
	BM24094	Cargo Rack Screen	65.27
	BM23360	Front Rack *Requires Front Brushguard for mounting.*	241.81
	BM24200	Glove Box Lock	12.84
	LP37044	OPS Overhead Organizer - Black *Available through Order Zone*	In Catalog
	LP37045	OPS Overhead Organizer - Camo *Available through Order Zone*	In Catalog
	LP25929	Rhino Grip XL - Double *Requires cargo box rails.* *Available through Order Zone.*	In Catalog
	LP25928	Rhino Grip XL - Single *Requires cargo box rails.* *Available through Order Zone.*	In Catalog
	BM23385	Tire Rack *Requires cargo box rails.*	231.76
	BM23874	Underseat Storage	109.14
	BM24096	Vise Mount	53.50
		Carts / Hitches:	
	LPPCT10LXATV	10AT Cart *Available through Order Zone*	In Catalog
	LPPCT17ATJD	17AT Cart *Available through Order Zone.*	In Catalog
	BM23363	2" Front Receiver Hitch and Recovery Loops	109.14
	LPUT21JD	21 Steel Utility Cart *Available through Order Zone*	In Catalog
	PM05101	Ball Mount - 1.875 in. (48mm)	See Parts
	PM05201	Ball Mount - 2 in. (51mm)	See Parts
	BM22290	Drawbar - 2 in. (51mm)	38.51
		Custom & High Performance:	
	BM23438	High Capacity Alternator	714.76
	BM24171	Over-Temperature Sensor Kit	53.50
	BM22703	Seat-Belt Comfort Strap (2) *Also compatible with Deluxe Cab.*	77.04

XUV 550 S4 Camo PR
Continued

CODE	ATTACHMENT IDENTIFIER	DESCRIPTION	SUGGESTED LIST PRICE USD ($)
		ATTACHMENTS FOR FIELD CONVERSION Continued...	
	BM24376	Speedometer Kit	109.14
	BM23379	Stereo and Speaker Kit *Includes mounting kit only; must choose one of the following three head units to have complete stereo:* *Radio, Heavy Duty AM / FM / WB / AUX (SWJHD1120)* *Radio, Heavy Duty AM / FM / WB / SAT / I-POD (SWJHD1620)* *Radio, AM / FM / WB / CD / AUX / SAT Ready (SWJHD3620)* *Must order head unit through Parts.*	660.19
		Lights / Signals:	
	BM23369	Backup Alarm	101.66
	BM24013	Beacon Light *Requires OPS Light Kit Switch Bank. Also requires Brake and Tail Light Installation Kit, if 4002 / 4003 option code is not selected, for brake light mounting; OR OPS Poly Roof for roof mounting.*	219.36
	BM24233	Brake and Tail Light Installation Kit *Required to mount Brake and Tail Light Kit.*	33.17
	BM24100	Brake and Tail Light Kit *Requires Brake and Tail Light Installation Kit.*	53.50
	BM23367	Deluxe Light Kit *Includes flashers, turn signals (front & rear), brake & tail lights, and back-up lights. Requires OPS Poly Roof for installation.*	384.13
	BM23442	Hella HID Sport Driving Lights *Requires OPS Light Kit Switch Bank for OPS or poly roof mounting, or Front Brushguard for bumper mounting.*	935.19
	BM24108	Hella Performance Spot Lights *Requires OPS Light Kit Switch Bank for OPS or poly roof mounting, or Front Brushguard for bumper mounting.*	343.47
	BM23370	Horn Kit	97.37
	BM24090	Long Range Light Kit *Requires OPS Light Kit Switch Bank for OPS or Poly Roof mounting; or Front Brushguard for bumper mounting.*	191.53
	BM24016	Mid-Range Light Kit *Requires OPS Light Kit Switch Bank. Compatible with OPS Poly Roofs or on the OPS alone. Can be mounted on the front or rear of the OPS or poly roof. Can not be used for rear mounting on XUV550 S4.*	123.06
	BM24273	Mid-Range Light Kit (rear XUV550 S4 Only) *Requires OPS Light Kit Switch Bank. Compatible with OPS Poly Roofs, or on the OPS alone.*	123.06
	BM24089	OPS Light Kit Switch Bank *Accommodates up to three separate OPS Light Kits.*	67.41
		Protection:	
	BM23309	CV Guards	142.31
	BM23884	Floor Mat - S4 *Front and rear mats.*	163.71

XUV 550 S4 Camo PR

Continued

CODE	ATTACHMENT IDENTIFIER	DESCRIPTION	SUGGESTED LIST PRICE USD ($)
		ATTACHMENTS FOR FIELD CONVERSION Continued...	
	BM23365	Front Brushguard	329.56
	BM23394	Front Fender Guards *Requires Front Brushguard*	175.49
	BM23362	Rear Bumper	186.19
	LP37038	Vehicle Cover (S4) - Black *Available through Order Zone*	In Catalog
	LP37039	Vehicle Cover (S4) - Camo *Available through Order Zone*	In Catalog
	LP37042	Vehicle Cover (S4) - Transportable (Black) *Available through Order Zone*	In Catalog
	LP37043	Vehicle Cover (S4) - Transportable (Camo) *Available through Order Zone*	In Catalog
		Sprayers / Pressure Washers:	
	LP39965	25 Gallon Bed Sprayer *Available through Order Zone*	In Catalog
	LP39964	45 Gallon Bed Sprayer *Available through Order Zone*	In Catalog
	LP39098	45 Gallon High Performance Bed Sprayer *Available through Order Zone*	In Catalog
	LP20485	45 Gallon Tow-Behind Sprayer *Available through Order Zone*	In Catalog
	LP22885	HP 150 in. Precision Boom *Compatible with HP sprayers.* *Available through Order Zone.*	In Catalog
	LP39963	HP 45 Gallon Sprayer - Tow Behind *Available through Order Zone*	In Catalog
	LP22884	HP Boomless Nozzles *Compatible with HP sprayers.* *Available through Order Zone.*	In Catalog
	LP22911	HP Standard Gator Boom *Compatible with HP sprayers.* *Available through Order Zone.*	In Catalog
		Winch:	
	BM24019	Warn Winch (3,000 lbs) - S4 *Requires 2 In. Front Receiver Hitch with Recovery Loops for mounting.*	880.61
	BM21392	Winch Accessories Kit	129.47

SERVICE CONTRACTS - RESIDENTIAL OWNERS/USE

Visit http://www.JohnDeere.com/ServicePlans for more information on John Deere Service Contracts. May not be Available in Parts of the U.S., Not Available in Canada. Price may vary due to driving distance and/or time

XUV 550 S4 Camo PR
Continued

CODE	ATTACHMENT IDENTIFIER	DESCRIPTION	SUGGESTED LIST PRICE USD ($)
		SERVICE CONTRACTS - RESIDENTIAL OWNERS/USE Continued...	
		from machine to dealership location.	
		John Deere Extended Service Plan - 2-Year Option *Available for T-Series, HPX and XUV utility vehicles only.)* *2-year extended service plan. (1 year of extended service protection);* *2-years of warranty transportation.*	399.99
		John Deere Extended Service Plan - 3-Year Option *3-year extended service plan. (2 years of extended service protection);* *3-years of warranty transportation.*	569.99

XUV 550 S4 Camo Utility and Protection PR

Equipment for Base Machine

ENGINE:
16 Engine HP*(570cc),
Dynamically tuned carburetor
Two-cylinder, Air-cooled
4-Cycle Gasoline
Full Pressure Lubrication
System
Replaceable Single Dry-Type
Element Air Cleaner with
Remote Intake
4.9 Gallon (18.5L) Fuel
Capacity
Solid-state Ignition (12V)
Spark-arresting Muffler
ELECTRICAL:
Electric Start
16 Amp Regulated, 3-Phase
Alternator
340 CCA Battery
Two 55 Watt Halogen
Headlights
TRANSAXLE/TRANSMISSION:
Continuously Variable
Transmission
Full Clutch Enclosure
Two-speed Transaxle
Operator Selectable 4WD
28 mph (45 kph) Maximum
Forward Speed
Selectable Four-Wheel
Drive System
Front and Rear Hydraulic Disk
Brakes with stainless steel
rotors
Foot-operated Park brake
Large diameter half shafts with
TPE boots
STEERING/SUSPENSION:
Rack and Pinion Steering
Indpendent Front Suspension
(IRS) with 9 inches (229 mm)
of travel
Independent Rear Suspension
(IRS) with 8 inches (203mm)
of travel
Integrated 2 In. Rear Receiver
19.7 ft. Turning Radius -- TBD
Ground Clearance: 9.3 In.
(236 mm)
FRAME/STYLED PARTS:
Full, robotically welded frame
design
Side frame rails for rock
sliding
OCCUPANT PROTECTION SYSTEM(OPS):
1.75 In. (44.4 mm) Steel Tubular
Overhead Structure
Multiple Passenger Handholds
3-pt. Seat Belts
SAE J2194 & OSHA ROPS Certified
OPERATOR STATION:
Bench Seats
Hip Restraint Bars for Driver
and Passenger

Sealed Glove Box
Sealed Storage Compartment Under
Hood
Fuel Gauge
Instrument Cluster - Hour Meter,
and Seat Belt
12v DC Outlet
FRONTAL PROTECTION:
Integrated Front Bumper
Accepts optional front
receiver, winch and brush guard

DIMENSIONS(WITH OPS):
144 In. Long x 56.5 In.
Wide x 74 In. High
PAYLOAD CAPACITY
1200 Lb (544 kg) Total Payload
Capacity which Includes:
200 Lb (91 kg) Driver,
600 Lb (273 kg) Passenger, and
400 Lb (181 kg) in Cargo Box
Towing Capacity:
1,100 Lb (499kg)
CARGO BOX:
32.3 In. Long x 47.6 In. Wide x
11.7 In. Deep
(82 cm x 120.9 cm x 29.7 cm)
8.9 cu. ft (.25 cu.m) Capacity
400 Lbs (181 kg) Box Capacity
Tilting Box , Open from both
sides
Hinged (Bottom) Tailgate,
Removeable
CONVERTIBLE CARGO RACK:
23.5 In. Long x 38.8 In. Wide x
8.1 In. Deep
(59.7cm x 98.6 cm x 20.6 cm)
4.3 cu. ft (0.12 cu.m) Capacity
200 Lbs (90.7 kg) Rack Capacity

TIRES:
Front: 25x8-12 Terra Hawk
(All Terrain Tires)
Rear: 25x10-12 Terra Hawk
(All Terrain Tires)
SAFETY VIDEO TAPE:
Safety and Operational DVD
Operators Manual
*Engine HP is Provided by the
Engine Manufacturer to be Used
for Comparison Purposes Only,
Actual Operating HP will be
Less.

CODE	ATTACHMENT IDENTIFIER	DESCRIPTION	SUGGESTED LIST PRICE USD ($)

Select One Code From Each Required Category

BASE MACHINE

F.O.B. Janesville, Wisconsin

515CM	XUV 550 S4 Camo Utility and Protection PR *Base Machine Suggested List Price Does Not Include 500 USD Destination Charge.*	10,149.00

DESTINATION

0202	US / CANADA	In Base Price

WHEELS WITH TIRES (FOUR)

1005	Black Alloy Wheels Maxxis Bighorn Radical	823.00

XUV 550 S4 Camo Utility and Protection PR

Continued

CODE	ATTACHMENT IDENTIFIER	DESCRIPTION	SUGGESTED LIST PRICE USD ($)
		CARGO BOX LIFT	
3003		Manual Lift	In Base Price
		OPS/REAR SCREEN/BRAKE/TAILLIGHT	
4002		OPS, XUV 550 with Brake/Taillight	50.00
		PROTECTION/UTILITY AND PROTECTION PACKAGES	
5100		Utility and Protection Package Package Consists of: Front Brushguard, OPS S4 Black Poly Roof, Cargo Box Rail , 5 Gallon Pail Holder, Rear Bumper, 2 In. Front Reveiver Hitch.	1,267.00
		STORAGE	
6010		Less Front Seat Storage	In Base Price
		ATTACHMENTS FOR FIELD CONVERSION	
		Cabs/Roofs/Windshields:	
	BM23373	OPS Full No-Scratch Windshield	531.79
	BM23358	OPS Full Poly Windshield	362.73
	BM23376	OPS Glass Windshield w/ Wiper	714.76
	BM23375	OPS Half Poly Windshield	241.81
	BM24114	OPS Poly Cab - S4 *Includes front and rear doors, and rear panel. OPS Poly Roof and Windshield sold separately.*	4,297.11
	BM23398	OPS S4 Poly Roof - Black	494.34
	LP10314	OPS Side Mirror - Left *Available through Order Zone*	In Catalog
	LP10315	OPS Side Mirror - Right *Available through Order Zone*	In Catalog
	LP37048	OPS Soft Roof (S4) - Black *Available through Order Zone*	In Catalog
	LP37049	OPS Soft Roof (S4) - Camo *Available through Order Zone*	In Catalog
	BM24687	Replacement OPS Kit XUV 550 S4 *Includes Front and Rear OPS.*	765.06
		Cargo Box Options / Storage:	
	BM23849	5 Gallon Pail Holder *Cargo box rails required*	38.51
	BM23371	Box Mat	86.67
	BM23307	Cargo Box Power Lift	770.40

XUV 550 S4 Camo Utility and Protection PR
Continued

CODE	ATTACHMENT IDENTIFIER	DESCRIPTION	SUGGESTED LIST PRICE USD ($)
		ATTACHMENTS FOR FIELD CONVERSION Continued...	
	BM23384	Cargo Box Wall Extensions *Requires cargo box rails.* *Not compatible with poly cab.*	329.56
	BM24094	Cargo Rack Screen	65.27
	BM23360	Front Rack *Requires Front Brushguard for mounting.*	241.81
	BM24200	Glove Box Lock	12.84
	LP37044	OPS Overhead Organizer - Black *Available through Order Zone*	In Catalog
	LP37045	OPS Overhead Organizer - Camo *Available through Order Zone*	In Catalog
	LP25929	Rhino Grip XL - Double *Requires cargo box rails.* *Available through Order Zone.*	In Catalog
	LP25928	Rhino Grip XL - Single *Requires cargo box rails.* *Available through Order Zone.*	In Catalog
	BM23385	Tire Rack *Requires cargo box rails.*	231.76
	BM23874	Underseat Storage	109.14
	BM24096	Vise Mount	53.50
		Carts / Hitches:	
	LPPCT10LXATV	10AT Cart *Available through Order Zone*	In Catalog
	LPPCT17ATJD	17AT Cart *Available through Order Zone.*	In Catalog
	BM23363	2" Front Receiver Hitch and Recovery Loops	109.14
	LPUT21JD	21 Steel Utility Cart *Available through Order Zone*	In Catalog
	PM05101	Ball Mount - 1.875 in. (48mm)	See Parts
	PM05201	Ball Mount - 2 in. (51mm)	See Parts
	BM22290	Drawbar - 2 in. (51mm)	38.51
		Custom & High Performance:	
	BM23438	High Capacity Alternator	714.76
	BM24171	Over-Temperature Sensor Kit	53.50
	BM22703	Seat-Belt Comfort Strap (2) *Also compatible with Deluxe Cab.*	77.04

XUV 550 S4 Camo Utility and Protection PR
Continued

CODE	ATTACHMENT IDENTIFIER	DESCRIPTION	SUGGESTED LIST PRICE USD ($)
		ATTACHMENTS FOR FIELD CONVERSION Continued...	
	BM24376	Speedometer Kit	109.14
	BM23379	Stereo and Speaker Kit *Includes mounting kit only; must choose one of the following three head units to have complete stereo:* *Radio, Heavy Duty AM / FM / WB / AUX (SWJHD1120)* *Radio, Heavy Duty AM / FM / WB / SAT / I-POD (SWJHD1620)* *Radio, AM / FM / WB / CD / AUX / SAT Ready (SWJHD3620)* *Must order head unit through Parts.*	660.19
		Lights / Signals:	
	BM23369	Backup Alarm	101.66
	BM24013	Beacon Light *Requires OPS Light Kit Switch Bank. Also requires Brake and Tail Light Installation Kit, if 4002 / 4003 option code is not selected, for brake light mounting; OR OPS Poly Roof for roof mounting.*	219.36
	BM24233	Brake and Tail Light Installation Kit *Required to mount Brake and Tail Light Kit.*	33.17
	BM24100	Brake and Tail Light Kit *Requires Brake and Tail Light Installation Kit.*	53.50
	BM23367	Deluxe Light Kit *Includes flashers, turn signals (front & rear), brake & tail lights, and back-up lights. Requires OPS Poly Roof for installation.*	384.13
	BM23442	Hella HID Sport Driving Lights *Requires OPS Light Kit Switch Bank for OPS or poly roof mounting, or Front Brushguard for bumper mounting.*	935.19
	BM24108	Hella Performance Spot Lights *Requires OPS Light Kit Switch Bank for OPS or poly roof mounting, or Front Brushguard for bumper mounting.*	343.47
	BM23370	Horn Kit	97.37
	BM24090	Long Range Light Kit *Requires OPS Light Kit Switch Bank for OPS or Poly Roof mounting; or Front Brushguard for bumper mounting.*	191.53
	BM24016	Mid-Range Light Kit *Requires OPS Light Kit Switch Bank. Compatible with OPS Poly Roofs or on the OPS alone. Can be mounted on the front or rear of the OPS or poly roof. Can not be used for rear mounting on XUV550 S4.*	123.06
	BM24273	Mid-Range Light Kit (rear XUV550 S4 Only) *Requires OPS Light Kit Switch Bank. Compatible with OPS Poly Roofs, or on the OPS alone.*	123.06
	BM24089	OPS Light Kit Switch Bank *Accommodates up to three separate OPS Light Kits.*	67.41
		Protection:	
	BM23309	CV Guards	142.31
	BM23884	Floor Mat - S4 *Front and rear mats.*	163.71

XUV 550 S4 Camo Utility and Protection PR

Continued

CODE	ATTACHMENT IDENTIFIER	DESCRIPTION	SUGGESTED LIST PRICE USD ($)
		ATTACHMENTS FOR FIELD CONVERSION Continued...	
	BM23365	Front Brushguard	329.56
	BM23394	Front Fender Guards *Requires Front Brushguard*	175.49
	BM23362	Rear Bumper	186.19
	LP37038	Vehicle Cover (S4) - Black *Available through Order Zone*	In Catalog
	LP37039	Vehicle Cover (S4) - Camo *Available through Order Zone*	In Catalog
	LP37042	Vehicle Cover (S4) - Transportable (Black) *Available through Order Zone*	In Catalog
	LP37043	Vehicle Cover (S4) - Transportable (Camo) *Available through Order Zone*	In Catalog
		Sprayers / Pressure Washers:	
	LP39965	25 Gallon Bed Sprayer *Available through Order Zone*	In Catalog
	LP39964	45 Gallon Bed Sprayer *Available through Order Zone*	In Catalog
	LP39098	45 Gallon High Performance Bed Sprayer *Available through Order Zone*	In Catalog
	LP20485	45 Gallon Tow-Behind Sprayer *Available through Order Zone*	In Catalog
	LP22885	HP 150 in. Precision Boom *Compatible with HP sprayers.* *Available through Order Zone.*	In Catalog
	LP39963	HP 45 Gallon Sprayer - Tow Behind *Available through Order Zone*	In Catalog
	LP22884	HP Boomless Nozzles *Compatible with HP sprayers.* *Available through Order Zone.*	In Catalog
	LP22911	HP Standard Gator Boom *Compatible with HP sprayers.* *Available through Order Zone.*	In Catalog
		Winch:	
	BM24019	Warn Winch (3,000 lbs) - S4 *Requires 2 In. Front Receiver Hitch with Recovery Loops for mounting.*	880.61
	BM21392	Winch Accessories Kit	129.47

SERVICE CONTRACTS - RESIDENTIAL OWNERS/USE

Visit http://www.JohnDeere.com/ServicePlans for more information on John Deere Service Contracts. May not be Available in Parts of the U.S., Not Available in Canada. Price may vary due to driving distance and/or time

XUV 550 S4 Camo Utility and Protection PR

Continued

CODE	ATTACHMENT IDENTIFIER	DESCRIPTION	SUGGESTED LIST PRICE USD ($)
		SERVICE CONTRACTS - RESIDENTIAL OWNERS/USE Continued...	
		from machine to dealership location.	
		John Deere Extended Service Plan - 2-Year Option *Available for T-Series, HPX and XUV utility vehicles only.)* *2-year extended service plan. (1 year of extended service protection);* *2-years of warranty transportation.*	399.99
		John Deere Extended Service Plan - 3-Year Option *3-year extended service plan. (2 years of extended service protection);* *3-years of warranty transportation.*	569.99

XUV 550 Green & Yellow

Equipment for Base Machine

ENGINE:
16 Engine HP*(570cc),
Dynamically tuned carburetor
Two-cylinder, Air-cooled
4-Cycle Gasoline
Full Pressure Lubrication System
Replaceable Single Dry-Type Element Air Cleaner with Remote Intake
4.9 Gallon (18.5L) Fuel Capacity
Solid-state Ignition (12V)
Spark-arresting Muffler
ELECTRICAL:
Electric Start
16 Amp Regulated, 3-Phase Alternator
340 CCA Battery
Two 55 Watt Halogen Headlights
TRANSAXLE/TRANSMISSION:
Continuously Variable Transmission
Full Clutch Enclosure
Two-speed Transaxle
Operator Selectable 4WD
28 mph (45 kph) Maximum Forward Speed
Selectable Four-Wheel Drive System
Front and Rear Hydraulic Disk Brakes with stainless steel rotors
Foot-operated Park brake
Large diameter half shafts with TPE boots
STEERING/SUSPENSION:
Rack and Pinion Steering
Indpendent Front Suspension (IRS) with 9 inches (229 mm) of travel
Independent Rear Suspension (IRS) with 8 inches (203mm) of travel
Integrated 2 In. Rear Receiver
12.3 ft. Turning Radius
Ground Clearance: 10.5 In. (267 mm)
FRAME/STYLED PARTS:
Full, robotically welded frame design
Side frame rails for rock sliding
OCCUPANT PROTECTION SYSTEM(OPS):
1.75 In. (44.4 mm) Steel Tubular Overhead Structure
Multiple Passenger Handholds
3-pt. Seat Belts
SAE J2194 & OSHA ROPS Certified
OPERATOR STATION:
Bench Seats
Hip Restraint Bars for Driver and Passenger

Sealed Glove Box
Sealed Storage Compartment Under Hood
Two cup holders in dash
Fuel Gauge
Instrument Cluster - Hour Meter, and Seat Belt
12v DC Outlet
FRONTAL PROTECTION:
Integrated Front Bumper
Accepts optional front receiver, winch and brush guard

DIMENSIONS(WITH OPS):
113 In. Long x 56.5 In. Wide x 73.5 In. High
PAYLOAD CAPACITY
800 Lb (363 kg) Total Payload Capacity which Includes:
200 Lb (91 kg) Driver,
200 Lb (91 kg) Passenger, and 400 Lb (181 kg) in Cargo Box
Towing Capacity:
1,100 Lb (499kg)
CARGO BOX:
32.3 In. Long x 47.6 In. Wide x 11.7 In. Deep (82 cm x 120.9 cm x 29.7 cm)
8.9 cu. ft (.25 cu.m) Capacity
400 Lbs (181 kg) Box Capacity
Tilting Box , Open from both sides
Hinged (Bottom) Tailgate, Removeable

TIRES:
Front: 25x8-12 Ancla XT (Extreme Terrain Tires)
Rear: 25x10-12 Ancla XT (Extreme Terrain Tires)
SAFETY VIDEO TAPE:
Safety and Operational DVD
Operators Manual
*Engine HP is Provided by the Engine Manufacturer to be Used for Comparison Purposes Only, Actual Operating HP will be Less.

CODE	ATTACHMENT IDENTIFIER	DESCRIPTION	SUGGESTED LIST PRICE USD ($)

Select One Code From Each Required Category

BASE MACHINE

F.O.B. Janesville, Wisconsin

5160M	XUV 550 Green & Yellow *Base Machine Suggested List Price Does Not Include 400 USD Destination Charge.*	8,199.00

DESTINATION

0202	US / CANADA	In Base Price
0230	Australia/New Zealand	Same Price
0179	EUROPE	46.00
0195	MEXICO	Same Price

XUV 550 Green & Yellow
Continued

CODE	ATTACHMENT IDENTIFIER	DESCRIPTION	SUGGESTED LIST PRICE USD ($)
		DESTINATION Continued...	
0250		ALL OTHER COUNTRIES	Same Price
		WHEELS WITH TIRES (FOUR)	
1000		Yellow Steel Wheels Terra Hawk All Terrain Tires	Same Price
1001		Yellow Steel Wheels Ancla M-T Extreme Terrain Tire	In Base Price
1002		Yellow Alloy Wheels Maxxis Bighorn Radial Tires	823.00
1003		Yellow Steel Wheels Directional Turf Tires	Same Price
		DRIVER SEAT	
2000		18 In. Standard XUV HB Seat -Yellow	Same Price
2001		Bench Seat - Yellow	In Base Price
2002		21 In. Deluxe XUV HB Seat - Yellow	70.00
		CARGO BOX LIFT	
3003		Manual Lift	In Base Price
3004		Cargo Box Power Lift	720.00
		OPS/REAR SCREEN/BRAKE/TAILLIGHT	
4000		OPS	In Base Price
4001		OPS w/Rear Screen	205.00
4002		OPS, XUV 550 with Brake/Taillight	50.00
4003		OPS, with Brake/Taillight/Rear Screen	255.00
		PROTECTION/UTILITY AND PROTECTION PACKAGES	
5000		Protection Package Package Consists of: Front Brushguard, OPS Black Poly Roof, Cargo Box Rail	768.00
5101		Rear Bumper	174.00
5100		Utility and Protection Package Package Consists of: Front Brushguard, OPS Black Poly Roof, Cargo Box Rail, Rear Bumper, 2 In. Front Reveiver Hitch.	1,064.00
5110		Less Utility and Protection Package	In Base Price
		ATTACHMENTS FOR FIELD CONVERSION	
		Cabs/Roofs/Windshields:	
	BM23373	OPS Full No-Scratch Windshield	531.79
	BM23358	OPS Full Poly Windshield	362.73

XUV 550 Green & Yellow
Continued

CODE	ATTACHMENT IDENTIFIER	DESCRIPTION	SUGGESTED LIST PRICE USD ($)
		ATTACHMENTS FOR FIELD CONVERSION Continued...	
	BM23376	OPS Glass Windshield w/ Wiper	714.76
	BM23375	OPS Half Poly Windshield	241.81
	BM23378	OPS Poly Cab *Includes doors and rear panel. OPS Poly Roof and Windshield sold separately.*	2,533.76
	BM23864	OPS Poly Rear Window *Not compatibile with OPS Poly Cab.*	273.91
	BM23397	OPS Poly Roof - Black	329.56
	BM23396	OPS Rear Screen *Includes headrests*	219.36
	LP10314	OPS Side Mirror - Left *Available through Order Zone*	In Catalog
	LP10315	OPS Side Mirror - Right *Available through Order Zone*	In Catalog
	LP37046	OPS Soft Roof - Black *Available through Order Zone*	In Catalog
	BM24382	Replacement Ops Kit XUV 550	384.13
		Cargo Box Options / Storage:	
	BM23849	5 Gallon Pail Holder *Cargo box rails required*	38.51
	BM23371	Box Mat	86.67
	BM23307	Cargo Box Power Lift	770.40
	BM23526	Cargo Box Rails	109.14
	BM23384	Cargo Box Wall Extensions *Requires cargo box rails.* *Not compatible with poly cab.*	329.56
	BM23360	Front Rack *Requires Front Brushguard for mounting.*	241.81
	BM24200	Glove Box Lock	12.84
	LP37044	OPS Overhead Organizer - Black *Available through Order Zone*	In Catalog
	LP25929	Rhino Grip XL - Double *Requires cargo box rails.* *Available through Order Zone.*	In Catalog
	LP25928	Rhino Grip XL - Single *Requires cargo box rails.* *Available through Order Zone.*	In Catalog
	BM23385	Tire Rack *Requires cargo box rails.*	231.76

XUV 550 Green & Yellow
Continued

CODE	ATTACHMENT IDENTIFIER	DESCRIPTION	SUGGESTED LIST PRICE USD ($)
		ATTACHMENTS FOR FIELD CONVERSION Continued...	
		Carts / Hitches:	
	LPPCT10LXATV	10AT Cart *Available through Order Zone*	In Catalog
	LPPCT17ATJD	17AT Cart *Available through Order Zone.*	In Catalog
	BM23363	2" Front Receiver Hitch and Recovery Loops	109.14
	LPUT21JD	21 Steel Utility Cart *Available through Order Zone*	In Catalog
	PM05101	Ball Mount - 1.875 in. (48mm)	See Parts
	PM05201	Ball Mount - 2 in. (51mm)	See Parts
	BM22290	Drawbar - 2 in. (51mm)	38.51
		Custom & High Performance:	
	BM23438	High Capacity Alternator	714.76
	BM24171	Over-Temperature Sensor Kit	53.50
	BM22703	Seat-Belt Comfort Strap (2) *Also compatible with Deluxe Cab.*	77.04
	BM24376	Speedometer Kit	109.14
	BM23379	Stereo and Speaker Kit *Includes mounting kit only; must choose one of the following three head units to have complete stereo:* *Radio, Heavy Duty AM / FM / WB / AUX (SWJHD1120)* *Radio, Heavy Duty AM / FM / WB / SAT / I-POD (SWJHD1620)* *Radio, AM / FM / WB / CD / AUX / SAT Ready (SWJHD3620)* *Must order head unit through Parts.*	660.19
		Lights / Signals:	
	BM23369	Backup Alarm	101.66
	BM24013	Beacon Light *Requires OPS Light Kit Switch Bank. Also requires Brake and Tail Light Installation Kit, if 4002 / 4003 option code is not selected, for brake light mounting; OR OPS Poly Roof for roof mounting.*	219.36
	BM24233	Brake and Tail Light Installation Kit *Required to mount Brake and Tail Light Kit.*	33.17
	BM24100	Brake and Tail Light Kit *Requires Brake and Tail Light Installation Kit.*	53.50
	BM23367	Deluxe Light Kit *Includes flashers, turn signals (front & rear), brake & tail lights, and back-up lights. Requires OPS Poly Roof for installation.*	384.13
	BM23442	Hella HID Sport Driving Lights *Requires OPS Light Kit Switch Bank for OPS or poly roof mounting, or Front Brushguard for bumper mounting.*	935.19

XUV 550 Green & Yellow
Continued

CODE	ATTACHMENT IDENTIFIER	DESCRIPTION	SUGGESTED LIST PRICE USD ($)
		ATTACHMENTS FOR FIELD CONVERSION Continued...	
	BM24108	Hella Performance Spot Lights *Requires OPS Light Kit Switch Bank for OPS or poly roof mounting, or Front Brushguard for bumper mounting.*	343.47
	BM23370	Horn Kit	97.37
	BM24090	Long Range Light Kit *Requires OPS Light Kit Switch Bank for OPS or Poly Roof mounting; or Front Brushguard for bumper mounting.*	191.53
	BM24016	Mid-Range Light Kit *Requires OPS Light Kit Switch Bank. Compatible with OPS Poly Roofs or on the OPS alone. Can be mounted on the front or rear of the OPS or poly roof. Can not be used for rear mounting on XUV550 S4.*	123.06
	BM24089	OPS Light Kit Switch Bank *Accommodates up to three separate OPS Light Kits.*	67.41
		Protection:	
	BM23309	CV Guards	142.31
	BM23368	Floor Mat	78.11
	BM23365	Front Brushguard	329.56
	BM23394	Front Fender Guards *Requires Front Brushguard*	175.49
	BM24095	Full Underbody Skid Plate	163.71
	BM23362	Rear Bumper	186.19
	LP37036	Vehicle Cover - Black *Available through Order Zone*	In Catalog
	LP37037	Vehicle Cover - Camo *Available through Order Zone*	In Catalog
	LP37040	Vehicle Cover - Transportable (Black) *Available through Order Zone*	In Catalog
	LP37041	Vehicle Cover - Transportable (Camo) *Available through Order Zone*	In Catalog
		Sprayers / Pressure Washers:	
	LP39965	25 Gallon Bed Sprayer *Available through Order Zone*	In Catalog
	LP39964	45 Gallon Bed Sprayer *Available through Order Zone*	In Catalog
	LP39098	45 Gallon High Performance Bed Sprayer *Available through Order Zone*	In Catalog
	LP20485	45 Gallon Tow-Behind Sprayer *Available through Order Zone*	In Catalog

XUV 550 Green & Yellow

Continued

CODE	ATTACHMENT IDENTIFIER	DESCRIPTION	SUGGESTED LIST PRICE USD ($)
		ATTACHMENTS FOR FIELD CONVERSION Continued...	
	LP22885	HP 150 in. Precision Boom *Compatible with HP sprayers.* *Available through Order Zone.*	In Catalog
	LP39963	HP 45 Gallon Sprayer - Tow Behind *Available through Order Zone*	In Catalog
	LP22884	HP Boomless Nozzles *Compatible with HP sprayers.* *Available through Order Zone.*	In Catalog
	LP22911	HP Standard Gator Boom *Compatible with HP sprayers.* *Available through Order Zone.*	In Catalog
		Winch:	
	BM24437	Warn Winch (3000 lbs) *Requires 2 In. Front Receiver Hitch with Recovery Loops for mounting.*	770.40
	BM21392	Winch Accessories Kit	129.47
		SERVICE CONTRACTS - RESIDENTIAL OWNERS/USE	
		Visit http://www.JohnDeere.com/ServicePlans for more information on John Deere Service Contracts. May not be Available in Parts of the U.S., Not Available in Canada. Price may vary due to driving distance and/or time from machine to dealership location.	
		John Deere Extended Service Plan - 2-Year Option *Available for T-Series, HPX and XUV utility vehicles only.)* *2-year extended service plan. (1 year of extended service protection);* *2-years of warranty transportation.*	399.99
		John Deere Extended Service Plan - 3-Year Option *3-year extended service plan. (2 years of extended service protection);* *3-years of warranty transportation.*	569.99

XUV 550 Olive & Black

Equipment for Base Machine

ENGINE:
16 Engine HP*(570cc), Dynamically tuned carburetor
Two-cylinder, Air-cooled 4-Cycle Gasoline
Full Pressure Lubrication System
Replaceable Single Dry-Type Element Air Cleaner with Remote Intake
4.9 Gallon (18.5L) Fuel Capacity
Solid-state Ignition (12V)
Spark-arresting Muffler
ELECTRICAL:
Electric Start
16 Amp Regulated, 3-Phase Alternator
340 CCA Battery
Two 55 Watt Halogen Headlights
TRANSAXLE/TRANSMISSION:
Continuously Variable Transmission
Full Clutch Enclosure
Two-speed Transaxle
Operator Selectable 4WD
28 mph (45 kph) Maximum Forward Speed
Selectable Four-Wheel Drive System
Front and Rear Hydraulic Disk Brakes with stainless steel rotors
Foot-operated Park brake
Large diameter half shafts with TPE boots
STEERING/SUSPENSION:
Rack and Pinion Steering
Indpendent Front Suspension (IRS) with 9 inches (229 mm) of travel
Independent Rear Suspension (IRS) with 8 inches (203mm) of travel
Integrated 2 In. Rear Receiver
12.3 ft. Turning Radius
Ground Clearance: 10.5 In. (267 mm)
FRAME/STYLED PARTS:
Full, robotically welded frame design
Side frame rails for rock sliding
OCCUPANT PROTECTION SYSTEM(OPS):
1.75 In. (44.4 mm) Steel Tubular Overhead Structure
Multiple Passenger Handholds
3-pt. Seat Belts
SAE J2194 & OSHA ROPS Certified
OPERATOR STATION:
Bench Seats
Hip Restraint Bars for Driver and Passenger

Sealed Glove Box
Sealed Storage Compartment Under Hood
Two cup holders in dash
Fuel Gauge
Instrument Cluster - Hour Meter, and Seat Belt
12v DC Outlet
FRONTAL PROTECTION:
Integrated Front Bumper Accepts optional front receiver, winch and brush guard

DIMENSIONS(WITH OPS):
113 In. Long x 56.5 In. Wide x 73.5 In. High
PAYLOAD CAPACITY
800 Lb (363 kg) Total Payload Capacity which Includes:
200 Lb (91 kg) Driver,
200 Lb (91 kg) Passenger, and 400 Lb (181 kg) in Cargo Box
Towing Capacity:
1,100 Lb (499kg)
CARGO BOX:
32.3 In. Long x 47.6 In. Wide x 11.7 In. Deep (82 cm x 120.9 cm x 29.7 cm)
8.9 cu. ft (.25 cu.m) Capacity
400 Lbs (181 kg) Box Capacity
Tilting Box , Open from both sides
Hinged (Bottom) Tailgate, Removeable

TIRES:
Front: 25x8-12 Ancla XT (Extreme Terrain Tires)
Rear: 25x10-12 Ancla XT (Extreme Terrain Tires)
SAFETY VIDEO TAPE:
Safety and Operational DVD
Operators Manual
*Engine HP is Provided by the Engine Manufacturer to be Used for Comparison Purposes Only, Actual Operating HP will be Less.

CODE	ATTACHMENT IDENTIFIER	DESCRIPTION	SUGGESTED LIST PRICE USD ($)

Select One Code From Each Required Category

BASE MACHINE

F.O.B. Janesville, Wisconsin

5161M	XUV 550 Olive & Black *Base Machine Suggested List Price Does Not Include $400 USD Destination Charge.*	8,299.00

DESTINATION

0202	US / CANADA	In Base Price
0230	Australia/New Zealand	Same Price
0179	EUROPE	46.00
0195	MEXICO	Same Price

XUV 550 Olive & Black
Continued

CODE	ATTACHMENT IDENTIFIER	DESCRIPTION	SUGGESTED LIST PRICE USD ($)
		DESTINATION Continued...	
0250		ALL OTHER COUNTRIES	Same Price
		WHEELS WITH TIRES (FOUR)	
1004		Black Steel Wheels Ancla M-T Extreme Terrain Tire	In Base Price
1005		Black Alloy Wheels Maxxis Bighorn Radial Tires	823.00
1006		Silver Alloy Wheels Maxxis Bighorn Radial Tires	823.00
		DRIVER SEAT	
2003		18 In. Standard XUV HB Seat - Black	Same Price
2004		Bench Seat - Black	In Base Price
2005		21 In. Deluxe XUV HB Seat - Black	70.00
		CARGO BOX LIFT	
3003		Manual Lift	In Base Price
3004		Cargo Box Power Lift	720.00
		OPS/REAR SCREEN/BRAKE/TAILLIGHT	
4000		OPS	In Base Price
4001		OPS w/Rear Screen	205.00
4002		OPS, XUV 550 with Brake/Taillight	50.00
4003		OPS, with Brake/Taillight/Rear Screen	255.00
		PROTECTION/UTILITY AND PROTECTION PACKAGES	
5000		Protection Package Package Consists of: Front Brushguard, OPS Black Poly Roof, Cargo Box Rail	768.00
5100		Utility and Protection Package Package Consists of: Front Brushguard, OPS Black Poly Roof, Cargo Box Rail, Rear Bumper, 2 In. Front Reveiver Hitch.	1,064.00
5110		Less Utility and Protection Package	In Base Price
		Miscellaneous Items	
		Spanish North American Kit:	
9435		Spanish North American Operator's Manual and Decal Kit	No Charge
		ATTACHMENTS FOR FIELD CONVERSION	
		Cabs/Roofs/Windshields:	
	BM23373	OPS Full No-Scratch Windshield	531.79
	BM23358	OPS Full Poly Windshield	362.73

XUV 550 Olive & Black
Continued

CODE	ATTACHMENT IDENTIFIER	DESCRIPTION	SUGGESTED LIST PRICE USD ($)
		ATTACHMENTS FOR FIELD CONVERSION Continued...	
	BM23376	OPS Glass Windshield w/ Wiper	714.76
	BM23375	OPS Half Poly Windshield	241.81
	BM23378	OPS Poly Cab *Includes doors and rear panel. OPS Poly Roof and Windshield sold separately.*	2,533.76
	BM23864	OPS Poly Rear Window *Not compatibile with OPS Poly Cab.*	273.91
	BM23397	OPS Poly Roof - Black	329.56
	BM23396	OPS Rear Screen *Includes headrests*	219.36
	LP10314	OPS Side Mirror - Left *Available through Order Zone*	In Catalog
	LP10315	OPS Side Mirror - Right *Available through Order Zone*	In Catalog
	LP37046	OPS Soft Roof - Black *Available through Order Zone*	In Catalog
	BM24382	Replacement Ops Kit XUV 550	384.13
		Cargo Box Options / Storage:	
	BM23849	5 Gallon Pail Holder *Cargo box rails required*	38.51
	BM23371	Box Mat	86.67
	BM23307	Cargo Box Power Lift	770.40
	BM23526	Cargo Box Rails	109.14
	BM23384	Cargo Box Wall Extensions *Requires cargo box rails.* *Not compatible with poly cab.*	329.56
	BM23360	Front Rack *Requires Front Brushguard for mounting.*	241.81
	BM24200	Glove Box Lock	12.84
	LP37044	OPS Overhead Organizer - Black *Available through Order Zone*	In Catalog
	LP25929	Rhino Grip XL - Double *Requires cargo box rails.* *Available through Order Zone.*	In Catalog
	LP25928	Rhino Grip XL - Single *Requires cargo box rails.* *Available through Order Zone.*	In Catalog
	BM23385	Tire Rack *Requires cargo box rails.*	231.76

XUV 550 Olive & Black
Continued

CODE	ATTACHMENT IDENTIFIER	DESCRIPTION	SUGGESTED LIST PRICE USD ($)
		ATTACHMENTS FOR FIELD CONVERSION Continued...	
		Carts / Hitches:	
	LPPCT10LXATV	10AT Cart *Available through Order Zone*	In Catalog
	LPPCT17ATJD	17AT Cart *Available through Order Zone.*	In Catalog
	BM23363	2" Front Receiver Hitch and Recovery Loops	109.14
	LPUT21JD	21 Steel Utility Cart *Available through Order Zone*	In Catalog
	PM05101	Ball Mount - 1.875 in. (48mm)	See Parts
	PM05201	Ball Mount - 2 in. (51mm)	See Parts
	BM22290	Drawbar - 2 in. (51mm)	38.51
		Custom & High Performance:	
	BM23438	High Capacity Alternator	714.76
	BM24171	Over-Temperature Sensor Kit	53.50
	BM22703	Seat-Belt Comfort Strap (2) *Also compatible with Deluxe Cab.*	77.04
	BM24376	Speedometer Kit	109.14
	BM23379	Stereo and Speaker Kit *Includes mounting kit only; must choose one of the following three head units to have complete stereo:* *Radio, Heavy Duty AM / FM / WB / AUX (SWJHD1120)* *Radio, Heavy Duty AM / FM / WB / SAT / I-POD (SWJHD1620)* *Radio, AM / FM / WB / CD / AUX / SAT Ready (SWJHD3620)* *Must order head unit through Parts.*	660.19
		Lights / Signals:	
	BM23369	Backup Alarm	101.66
	BM24013	Beacon Light *Requires OPS Light Kit Switch Bank. Also requires Brake and Tail Light Installation Kit, if 4002 / 4003 option code is not selected, for brake light mounting; OR OPS Poly Roof for roof mounting.*	219.36
	BM24233	Brake and Tail Light Installation Kit *Required to mount Brake and Tail Light Kit.*	33.17
	BM24100	Brake and Tail Light Kit *Requires Brake and Tail Light Installation Kit.*	53.50
	BM23367	Deluxe Light Kit *Includes flashers, turn signals (front & rear), brake & tail lights, and back-up lights. Requires OPS Poly Roof for installation.*	384.13
	BM23442	Hella HID Sport Driving Lights *Requires OPS Light Kit Switch Bank for OPS or poly roof mounting, or Front Brushguard for bumper mounting.*	935.19

XUV 550 Olive & Black
Continued

CODE	ATTACHMENT IDENTIFIER	DESCRIPTION	SUGGESTED LIST PRICE USD ($)
		ATTACHMENTS FOR FIELD CONVERSION Continued...	
	BM24108	Hella Performance Spot Lights *Requires OPS Light Kit Switch Bank for OPS or poly roof mounting, or Front Brushguard for bumper mounting.*	343.47
	BM23370	Horn Kit	97.37
	BM24090	Long Range Light Kit *Requires OPS Light Kit Switch Bank for OPS or Poly Roof mounting; or Front Brushguard for bumper mounting.*	191.53
	BM24016	Mid-Range Light Kit *Requires OPS Light Kit Switch Bank. Compatible with OPS Poly Roofs or on the OPS alone. Can be mounted on the front or rear of the OPS or poly roof. Can not be used for rear mounting on XUV550 S4.*	123.06
	BM24089	OPS Light Kit Switch Bank *Accommodates up to three separate OPS Light Kits.*	67.41
		Protection:	
	BM23309	CV Guards	142.31
	BM23368	Floor Mat	78.11
	BM23365	Front Brushguard	329.56
	BM23394	Front Fender Guards *Requires Front Brushguard*	175.49
	BM24095	Full Underbody Skid Plate	163.71
	BM23362	Rear Bumper	186.19
	LP37036	Vehicle Cover - Black *Available through Order Zone*	In Catalog
	LP37037	Vehicle Cover - Camo *Available through Order Zone*	In Catalog
	LP37040	Vehicle Cover - Transportable (Black) *Available through Order Zone*	In Catalog
	LP37041	Vehicle Cover - Transportable (Camo) *Available through Order Zone*	In Catalog
		Sprayers / Pressure Washers:	
	LP39965	25 Gallon Bed Sprayer *Available through Order Zone*	In Catalog
	LP39964	45 Gallon Bed Sprayer *Available through Order Zone*	In Catalog
	LP39098	45 Gallon High Performance Bed Sprayer *Available through Order Zone*	In Catalog
	LP20485	45 Gallon Tow-Behind Sprayer *Available through Order Zone*	In Catalog

XUV 550 Olive & Black
Continued

CODE	ATTACHMENT IDENTIFIER	DESCRIPTION	SUGGESTED LIST PRICE USD ($)
		ATTACHMENTS FOR FIELD CONVERSION Continued...	
	LP22885	HP 150 in. Precision Boom *Compatible with HP sprayers.* *Available through Order Zone.*	In Catalog
	LP39963	HP 45 Gallon Sprayer - Tow Behind *Available through Order Zone*	In Catalog
	LP22884	HP Boomless Nozzles *Compatible with HP sprayers.* *Available through Order Zone.*	In Catalog
	LP22911	HP Standard Gator Boom *Compatible with HP sprayers.* *Available through Order Zone.*	In Catalog
		Winch:	
	BM24437	Warn Winch (3000 lbs) *Requires 2 In. Front Receiver Hitch with Recovery Loops for mounting.*	770.40
	BM21392	Winch Accessories Kit	129.47

XUV 550 Camo

Equipment for Base Machine

ENGINE:
16 Engine HP*(570cc), Dynamically tuned carburetor
Two-cylinder, Air-cooled 4-Cycle Gasoline
Full Pressure Lubrication System
Replaceable Single Dry-Type Element Air Cleaner with Remote Intake
4.9 Gallon (18.5L) Fuel Capacity
Solid-state Ignition (12V)
Spark-arresting Muffler
ELECTRICAL:
Electric Start
16 Amp Regulated, 3-Phase Alternator
340 CCA Battery
Two 55 Watt Halogen Headlights
TRANSAXLE/TRANSMISSION:
Continuously Variable Transmission
Full Clutch Enclosure
Two-speed Transaxle
Operator Selectable 4WD
28 mph (45 kph) Maximum Forward Speed
Selectable Four-Wheel Drive System
Front and Rear Hydraulic Disk Brakes with stainless steel rotors
Foot-operated Park brake
Large diameter half shafts with TPE boots
STEERING/SUSPENSION:
Rack and Pinion Steering
Indpendent Front Suspension (IRS) with 9 inches (229 mm) of travel
Independent Rear Suspension (IRS) with 8 inches (203mm) of travel
Integrated 2 In. Rear Receiver
12.3 ft. Turning Radius
Ground Clearance: 10.5 In. (267 mm)
FRAME/STYLED PARTS:
Full, robotically welded frame design
Side frame rails for rock sliding
OCCUPANT PROTECTION SYSTEM(OPS):
1.75 In. (44.4 mm) Steel Tubular Overhead Structure
Multiple Passenger Handholds
3-pt. Seat Belts
SAE J2194 & OSHA ROPS Certified
OPERATOR STATION:
Bench Seats
Hip Restraint Bars for Driver and Passenger

Sealed Glove Box
Sealed Storage Compartment Under Hood
Two cup holders in dash
Fuel Gauge
Instrument Cluster - Hour Meter, and Seat Belt
12v DC Outlet
FRONTAL PROTECTION:
Integrated Front Bumper Accepts optional front receiver, winch and brush guard

DIMENSIONS(WITH OPS):
113 In. Long x 56.5 In. Wide x 73.5 In. High
PAYLOAD CAPACITY
800 Lb (363 kg) Total Payload Capacity which Includes:
200 Lb (91 kg) Driver,
200 Lb (91 kg) Passenger, and 400 Lb (181 kg) in Cargo Box
Towing Capacity:
1,100 Lb (499kg)
CARGO BOX:
32.3 In. Long x 47.6 In. Wide x 11.7 In. Deep (82 cm x 120.9 cm x 29.7 cm)
8.9 cu. ft (.25 cu.m) Capacity
400 Lbs (181 kg) Box Capacity
Tilting Box , Open from both sides
Hinged (Bottom) Tailgate, Removeable

TIRES:
Front: 25x8-12 Ancla XT (Extreme Terrain Tires)
Rear: 25x10-12 Ancla XT (Extreme Terrain Tires)
SAFETY VIDEO TAPE:
Safety and Operational DVD
Operators Manual
*Engine HP is Provided by the Engine Manufacturer to be Used for Comparison Purposes Only, Actual Operating HP will be Less.

CODE	ATTACHMENT IDENTIFIER	DESCRIPTION	SUGGESTED LIST PRICE USD ($)

Select One Code From Each Required Category

BASE MACHINE

F.O.B. Janesville, Wisconsin

5162M	XUV 550 Camo *Base Machine Suggested List Price Does Not Include 400 USD Destination Charge.*	8,749.00

DESTINATION

0202	US / CANADA	In Base Price
0230	Australia/New Zealand	Same Price
0179	EUROPE	46.00
0195	MEXICO	Same Price

XUV 550 Camo
Continued

CODE	ATTACHMENT IDENTIFIER	DESCRIPTION	SUGGESTED LIST PRICE USD ($)
		DESTINATION Continued...	
0250		ALL OTHER COUNTRIES	Same Price
		WHEELS WITH TIRES (FOUR)	
1004		Black Steel Wheels Ancla M-T Extreme Terrain Tire	In Base Price
1005		Black Alloy Wheels Maxxis Bighorn Radial Tires	823.00
1006		Silver Alloy Wheels Maxxis Bighorn Radial Tires	823.00
		DRIVER SEAT	
2003		18 In. Standard XUV HB Seat - Black	Same Price
2004		Bench Seat - Black	In Base Price
2005		21 In. Deluxe XUV HB Seat - Black	70.00
		CARGO BOX LIFT	
3003		Manual Lift	In Base Price
3004		Cargo Box Power Lift	720.00
		OPS/REAR SCREEN/BRAKE/TAILLIGHT	
4000		OPS	In Base Price
4001		OPS w/Rear Screen	205.00
4002		OPS, XUV 550 with Brake/Taillight *Must order 5000 option code when ordering 4002 option code.*	50.00
4003		OPS, with Brake/Taillight/Rear Screen	255.00
		PROTECTION/UTILITY AND PROTECTION PACKAGES	
5000		Protection Package Package Consists of: Front Brushguard, OPS Camo Poly Roof, Cargo Box Rail.	1,154.00
5100		Utility and Protection Package Package Consists of: Front Brushguard, OPS Camo Poly Roof, Cargo Box Rail, Rear Bumper, 2 In. Front Reveiver Hitch.	1,449.00
5110		Less Utility and Protection Package	In Base Price
		ATTACHMENTS FOR FIELD CONVERSION	
		Cabs/Roofs/Windshields:	
	BM23373	OPS Full No-Scratch Windshield	531.79
	BM23358	OPS Full Poly Windshield	362.73
	BM23376	OPS Glass Windshield w/ Wiper	714.76
	BM23375	OPS Half Poly Windshield	241.81

XUV 550 Camo
Continued

CODE	ATTACHMENT IDENTIFIER	DESCRIPTION	SUGGESTED LIST PRICE USD ($)
		ATTACHMENTS FOR FIELD CONVERSION Continued...	
	BM23378	OPS Poly Cab *Includes doors and rear panel. OPS Poly Roof and Windshield sold separately.*	2,533.76
	BM23864	OPS Poly Rear Window *Not compatibile with OPS Poly Cab.*	273.91
	BM23397	OPS Poly Roof - Black	329.56
	BM23853	OPS Poly Roof - Camo	714.76
	BM23396	OPS Rear Screen *Includes headrests*	219.36
	LP10314	OPS Side Mirror - Left *Available through Order Zone*	In Catalog
	LP10315	OPS Side Mirror - Right *Available through Order Zone*	In Catalog
	LP37046	OPS Soft Roof - Black *Available through Order Zone*	In Catalog
	LP37047	OPS Soft Roof - Camo *Available through Order Zone*	In Catalog
	BM24382	Replacement Ops Kit XUV 550	384.13
		Cargo Box Options / Storage:	
	BM23849	5 Gallon Pail Holder *Cargo box rails required*	38.51
	BM23371	Box Mat	86.67
	BM23307	Cargo Box Power Lift	770.40
	BM23526	Cargo Box Rails	109.14
	BM23384	Cargo Box Wall Extensions *Requires cargo box rails.* *Not compatible with poly cab.*	329.56
	BM23360	Front Rack *Requires Front Brushguard for mounting.*	241.81
	BM24200	Glove Box Lock	12.84
	LP37044	OPS Overhead Organizer - Black *Available through Order Zone*	In Catalog
	LP37045	OPS Overhead Organizer - Camo *Available through Order Zone*	In Catalog
	LP25929	Rhino Grip XL - Double *Requires cargo box rails.* *Available through Order Zone.*	In Catalog

XUV 550 Camo

Continued

CODE	ATTACHMENT IDENTIFIER	DESCRIPTION	SUGGESTED LIST PRICE USD ($)
		ATTACHMENTS FOR FIELD CONVERSION Continued...	
	LP25928	Rhino Grip XL - Single *Requires cargo box rails.* *Available through Order Zone.*	In Catalog
	BM23385	Tire Rack *Requires cargo box rails.*	231.76
		Carts / Hitches:	
	LPPCT10LXATV	10AT Cart *Available through Order Zone*	In Catalog
	LPPCT17ATJD	17AT Cart *Available through Order Zone.*	In Catalog
	BM23363	2" Front Receiver Hitch and Recovery Loops	109.14
	LPUT21JD	21 Steel Utility Cart *Available through Order Zone*	In Catalog
	PM05101	Ball Mount - 1.875 in. (48mm)	See Parts
	PM05201	Ball Mount - 2 in. (51mm)	See Parts
	BM22290	Drawbar - 2 in. (51mm)	38.51
		Custom & High Performance:	
	BM23438	High Capacity Alternator	714.76
	BM24171	Over-Temperature Sensor Kit	53.50
	BM22703	Seat-Belt Comfort Strap (2) *Also compatible with Deluxe Cab.*	77.04
	BM24376	Speedometer Kit	109.14
	BM23379	Stereo and Speaker Kit *Includes mounting kit only; must choose one of the following three head units to have complete stereo:* *Radio, Heavy Duty AM / FM / WB / AUX (SWJHD1120)* *Radio, Heavy Duty AM / FM / WB / SAT / I-POD (SWJHD1620)* *Radio, AM / FM / WB / CD / AUX / SAT Ready (SWJHD3620)* *Must order head unit through Parts.*	660.19
		Lights / Signals:	
	BM23369	Backup Alarm	101.66
	BM24013	Beacon Light *Requires OPS Light Kit Switch Bank. Also requires Brake and Tail Light Installation Kit, if 4002 / 4003 option code is not selected, for brake light mounting; OR OPS Poly Roof for roof mounting.*	219.36
	BM24233	Brake and Tail Light Installation Kit *Required to mount Brake and Tail Light Kit.*	33.17
	BM24100	Brake and Tail Light Kit *Requires Brake and Tail Light Installation Kit.*	53.50

XUV 550 Camo
Continued

CODE	ATTACHMENT IDENTIFIER	DESCRIPTION	SUGGESTED LIST PRICE USD ($)
		ATTACHMENTS FOR FIELD CONVERSION Continued...	
	BM23367	Deluxe Light Kit *Includes flashers, turn signals (front & rear), brake & tail lights, and back-up lights. Requires OPS Poly Roof for installation.*	384.13
	BM23442	Hella HID Sport Driving Lights *Requires OPS Light Kit Switch Bank for OPS or poly roof mounting, or Front Brushguard for bumper mounting.*	935.19
	BM24108	Hella Performance Spot Lights *Requires OPS Light Kit Switch Bank for OPS or poly roof mounting, or Front Brushguard for bumper mounting.*	343.47
	BM23370	Horn Kit	97.37
	BM24090	Long Range Light Kit *Requires OPS Light Kit Switch Bank for OPS or Poly Roof mounting; or Front Brushguard for bumper mounting.*	191.53
	BM24016	Mid-Range Light Kit *Requires OPS Light Kit Switch Bank. Compatible with OPS Poly Roofs or on the OPS alone. Can be mounted on the front or rear of the OPS or poly roof. Can not be used for rear mounting on XUV550 S4.*	123.06
	BM24089	OPS Light Kit Switch Bank *Accommodates up to three separate OPS Light Kits.*	67.41
		Protection:	
	BM23309	CV Guards	142.31
	BM23368	Floor Mat	78.11
	BM23365	Front Brushguard	329.56
	BM23394	Front Fender Guards *Requires Front Brushguard*	175.49
	BM24095	Full Underbody Skid Plate	163.71
	BM23362	Rear Bumper	186.19
	LP37036	Vehicle Cover - Black *Available through Order Zone*	In Catalog
	LP37037	Vehicle Cover - Camo *Available through Order Zone*	In Catalog
	LP37040	Vehicle Cover - Transportable (Black) *Available through Order Zone*	In Catalog
	LP37041	Vehicle Cover - Transportable (Camo) *Available through Order Zone*	In Catalog
		Sprayers / Pressure Washers:	
	LP39965	25 Gallon Bed Sprayer *Available through Order Zone*	In Catalog
	LP39964	45 Gallon Bed Sprayer *Available through Order Zone*	In Catalog

XUV 550 Camo

Continued

CODE	ATTACHMENT IDENTIFIER	DESCRIPTION	SUGGESTED LIST PRICE USD ($)
		ATTACHMENTS FOR FIELD CONVERSION Continued...	
	LP39098	45 Gallon High Performance Bed Sprayer *Available through Order Zone*	In Catalog
	LP20485	45 Gallon Tow-Behind Sprayer *Available through Order Zone*	In Catalog
	LP22885	HP 150 in. Precision Boom *Compatible with HP sprayers.* *Available through Order Zone.*	In Catalog
	LP39963	HP 45 Gallon Sprayer - Tow Behind *Available through Order Zone*	In Catalog
	LP22884	HP Boomless Nozzles *Compatible with HP sprayers.* *Available through Order Zone.*	In Catalog
	LP22911	HP Standard Gator Boom *Compatible with HP sprayers.* *Available through Order Zone.*	In Catalog
		Winch:	
	BM24437	Warn Winch (3000 lbs) *Requires 2 In. Front Receiver Hitch with Recovery Loops for mounting.*	770.40
	BM21392	Winch Accessories Kit	129.47
		SERVICE CONTRACTS - RESIDENTIAL OWNERS/USE	
		Visit http://www.JohnDeere.com/ServicePlans for more information on John Deere Service Contracts. May not be Available in Parts of the U.S., Not Available in Canada. Price may vary due to driving distance and/or time from machine to dealership location.	
		John Deere Extended Service Plan - 2-Year Option *Available for T-Series, HPX and XUV utility vehicles only.)* *2-year extended service plan. (1 year of extended service protection);* *2-years of warranty transportation.*	399.99
		John Deere Extended Service Plan - 3-Year Option *3-year extended service plan. (2 years of extended service protection);* *3-years of warranty transportation.*	569.99

XUV 550 S4 Olive & Black

Equipment for Base Machine

ENGINE:
16 Engine HP*(570cc),
Dynamically tuned carburetor
Two-cylinder, Air-cooled
4-Cycle Gasoline
Full Pressure Lubrication System
Replaceable Single Dry-Type Element Air Cleaner with Remote Intake
4.9 Gallon (18.5L) Fuel Capacity
Solid-state Ignition (12V)
Spark-arresting Muffler
ELECTRICAL:
Electric Start
16 Amp Regulated, 3-Phase Alternator
340 CCA Battery
Two 55 Watt Halogen Headlights
TRANSAXLE/TRANSMISSION:
Continuously Variable Transmission
Full Clutch Enclosure
Two-speed Transaxle
Operator Selectable 4WD
28 mph (45 kph) Maximum Forward Speed
Selectable Four-Wheel Drive System
Front and Rear Hydraulic Disk Brakes with stainless steel rotors
Foot-operated Park brake
Large diameter half shafts with TPE boots
STEERING/SUSPENSION:
Rack and Pinion Steering
Indpendent Front Suspension (IRS) with 9 inches (229 mm) of travel
Independent Rear Suspension (IRS) with 8 inches (203mm) of travel
Integrated 2 In. Rear Receiver
19.7 ft. Turning Radius -- TBD
Ground Clearance: 9.3 In. (236 mm)
FRAME/STYLED PARTS:
Full, robotically welded frame design
Side frame rails for rock sliding
OCCUPANT PROTECTION SYSTEM(OPS):
1.75 In. (44.4 mm) Steel Tubular Overhead Structure
Multiple Passenger Handholds
3-pt. Seat Belts
SAE J2194 & OSHA ROPS Certified
OPERATOR STATION:
Bench Seats
Hip Restraint Bars for Driver and Passenger

Sealed Glove Box
Sealed Storage Compartment Under Hood
Fuel Gauge
Instrument Cluster - Hour Meter, and Seat Belt
12v DC Outlet
FRONTAL PROTECTION:
Integrated Front Bumper Accepts optional front receiver, winch and brush guard

DIMENSIONS(WITH OPS):
144 In. Long x 56.5 In. Wide x 74 In. High
PAYLOAD CAPACITY
1200 Lb (544 kg) Total Payload Capacity which Includes:
200 Lb (91 kg) Driver,
600 Lb (273 kg) Passenger, and 400 Lb (181 kg) in Cargo Box
Towing Capacity:
1,100 Lb (499kg)
CARGO BOX:
32.3 In. Long x 47.6 In. Wide x 11.7 In. Deep (82 cm x 120.9 cm x 29.7 cm)
8.9 cu. ft (.25 cu.m) Capacity
400 Lbs (181 kg) Box Capacity
Tilting Box , Open from both sides
Hinged (Bottom) Tailgate, Removeable
CONVERTIBLE CARGO RACK:
23.5 In. Long x 38.8 In. Wide x 8.1 In. Deep (59.7cm x 98.6 cm x 20.6 cm)
4.3 cu. ft (0.12 cu.m) Capacity
200 Lbs (90.7 kg) Rack Capacity

TIRES:
Front: 25x8-12 Terra Hawk (All Terrain Tires)
Rear: 25x10-12 Terra Hawk (All Terrain Tires)
SAFETY VIDEO TAPE:
Safety and Operational DVD
Operators Manual
*Engine HP is Provided by the Engine Manufacturer to be Used for Comparison Purposes Only, Actual Operating HP will be Less.

CODE	ATTACHMENT IDENTIFIER	DESCRIPTION	SUGGESTED LIST PRICE USD ($)

Select One Code From Each Required Category

BASE MACHINE

F.O.B. Janesville, Wisconsin

5151M	XUV 550 S4 Olive & Black *Base Machine Suggested List Price Does Not Include 500 USD Destination Charge.*	9,699.00

DESTINATION

0202	US / CANADA	In Base Price
0230	Australia/New Zealand	Same Price
0195	MEXICO	Same Price

XUV 550 S4 Olive & Black
Continued

CODE	ATTACHMENT IDENTIFIER	DESCRIPTION	SUGGESTED LIST PRICE USD ($)
		DESTINATION Continued...	
0250		ALL OTHER COUNTRIES	Same Price
		WHEELS WITH TIRES (FOUR)	
1004		Black Steel Wheels Ancla M-T Extreme Terrain Tire	In Base Price
1005		Black Alloy Wheels Maxxis Bighorn Radial Tires	823.00
1006		Silver Alloy Wheels Maxxis Bighorn Radial Tires	823.00
		CARGO BOX LIFT	
3003		Manual Lift	In Base Price
3004		Cargo Box Power Lift	720.00
		OPS/REAR SCREEN/BRAKE/TAILLIGHT	
4000		OPS	In Base Price
4002		OPS, XUV 550 with Brake/Taillight *Must order 5000 option code when ordering 4002 option code.*	50.00
		PROTECTION/UTILITY AND PROTECTION PACKAGES	
5000		Protection Package Package Consists of: Front Brushguard, OPS S4 Black Poly Roof, Cargo Box Rail, 5 Gallon Pail Holder.	972.00
5100		Utility and Protection Package Package Consists of: Front Brushguard, OPS S4 Black Poly Roof, Cargo Box Rail , 5 Gallon Pail Holder, Rear Bumper, 2 In. Front Reveiver Hitch.	1,267.00
5110		Less Utility and Protection Package	In Base Price
		STORAGE	
6000		Front Seat Storage	102.00
6010		Less Front Seat Storage	In Base Price
		Miscellaneous Items	
		Spanish North American Kit:	
9435		Spanish North American Operator's Manual and Decal Kit	No Charge
		ATTACHMENTS FOR FIELD CONVERSION	
		Cabs/Roofs/Windshields:	
	BM23373	OPS Full No-Scratch Windshield	531.79
	BM23358	OPS Full Poly Windshield	362.73
	BM23376	OPS Glass Windshield w/ Wiper	714.76
	BM23375	OPS Half Poly Windshield	241.81

XUV 550 S4 Olive & Black
Continued

CODE	ATTACHMENT IDENTIFIER	DESCRIPTION	SUGGESTED LIST PRICE USD ($)
		ATTACHMENTS FOR FIELD CONVERSION Continued...	
	BM24114	OPS Poly Cab - S4 *Includes front and rear doors, and rear panel. OPS Poly Roof and Windshield sold separately.*	4,297.11
	BM23398	OPS S4 Poly Roof - Black	494.34
	LP10314	OPS Side Mirror - Left *Available through Order Zone*	In Catalog
	LP10315	OPS Side Mirror - Right *Available through Order Zone*	In Catalog
	LP37048	OPS Soft Roof (S4) - Black *Available through Order Zone*	In Catalog
	BM24687	Replacement OPS Kit XUV 550 S4 *Includes Front and Rear OPS.*	765.06
		Cargo Box Options / Storage:	
	BM23849	5 Gallon Pail Holder *Cargo box rails required*	38.51
	BM23371	Box Mat	86.67
	BM23307	Cargo Box Power Lift	770.40
	BM23526	Cargo Box Rails	109.14
	BM23384	Cargo Box Wall Extensions *Requires cargo box rails.* *Not compatible with poly cab.*	329.56
	BM24094	Cargo Rack Screen	65.27
	BM23360	Front Rack *Requires Front Brushguard for mounting.*	241.81
	BM24200	Glove Box Lock	12.84
	LP37044	OPS Overhead Organizer - Black *Available through Order Zone*	In Catalog
	LP25929	Rhino Grip XL - Double *Requires cargo box rails.* *Available through Order Zone.*	In Catalog
	LP25928	Rhino Grip XL - Single *Requires cargo box rails.* *Available through Order Zone.*	In Catalog
	BM23385	Tire Rack *Requires cargo box rails.*	231.76
	BM23874	Underseat Storage	109.14
	BM24096	Vise Mount	53.50

XUV 550 S4 Olive & Black
Continued

CODE	ATTACHMENT IDENTIFIER	DESCRIPTION	SUGGESTED LIST PRICE USD ($)
		ATTACHMENTS FOR FIELD CONVERSION Continued...	
		Carts / Hitches:	
	LPPCT10LXATV	10AT Cart *Available through Order Zone*	In Catalog
	LPPCT17ATJD	17AT Cart *Available through Order Zone.*	In Catalog
	BM23363	2" Front Receiver Hitch and Recovery Loops	109.14
	LPUT21JD	21 Steel Utility Cart *Available through Order Zone*	In Catalog
	PM05101	Ball Mount - 1.875 in. (48mm)	See Parts
	PM05201	Ball Mount - 2 in. (51mm)	See Parts
	BM22290	Drawbar - 2 in. (51mm)	38.51
		Custom & High Performance:	
	BM23438	High Capacity Alternator	714.76
	BM24171	Over-Temperature Sensor Kit	53.50
	BM22703	Seat-Belt Comfort Strap (2) *Also compatible with Deluxe Cab.*	77.04
	BM24376	Speedometer Kit	109.14
	BM23379	Stereo and Speaker Kit *Includes mounting kit only; must choose one of the following three head units to have complete stereo:* *Radio, Heavy Duty AM / FM / WB / AUX (SWJHD1120)* *Radio, Heavy Duty AM / FM / WB / SAT / I-POD (SWJHD1620)* *Radio, AM / FM / WB / CD / AUX / SAT Ready (SWJHD3620)* *Must order head unit through Parts.*	660.19
		Lights / Signals:	
	BM23369	Backup Alarm	101.66
	BM24013	Beacon Light *Requires OPS Light Kit Switch Bank. Also requires Brake and Tail Light Installation Kit, if 4002 / 4003 option code is not selected, for brake light mounting; OR OPS Poly Roof for roof mounting.*	219.36
	BM24233	Brake and Tail Light Installation Kit *Required to mount Brake and Tail Light Kit.*	33.17
	BM24100	Brake and Tail Light Kit *Requires Brake and Tail Light Installation Kit.*	53.50
	BM23367	Deluxe Light Kit *Includes flashers, turn signals (front & rear), brake & tail lights, and back-up lights. Requires OPS Poly Roof for installation.*	384.13
	BM23442	Hella HID Sport Driving Lights *Requires OPS Light Kit Switch Bank for OPS or poly roof mounting, or Front Brushguard for bumper mounting.*	935.19

XUV 550 S4 Olive & Black
Continued

CODE	ATTACHMENT IDENTIFIER	DESCRIPTION	SUGGESTED LIST PRICE USD ($)
		ATTACHMENTS FOR FIELD CONVERSION Continued...	
	BM24108	Hella Performance Spot Lights *Requires OPS Light Kit Switch Bank for OPS or poly roof mounting, or Front Brushguard for bumper mounting.*	343.47
	BM23370	Horn Kit	97.37
	BM24090	Long Range Light Kit *Requires OPS Light Kit Switch Bank for OPS or Poly Roof mounting; or Front Brushguard for bumper mounting.*	191.53
	BM24016	Mid-Range Light Kit *Requires OPS Light Kit Switch Bank. Compatible with OPS Poly Roofs or on the OPS alone. Can be mounted on the front or rear of the OPS or poly roof. Can not be used for rear mounting on XUV550 S4.*	123.06
	BM24273	Mid-Range Light Kit (rear XUV550 S4 Only) *Requires OPS Light Kit Switch Bank. Compatible with OPS Poly Roofs, or on the OPS alone.*	123.06
	BM24089	OPS Light Kit Switch Bank *Accommodates up to three separate OPS Light Kits.*	67.41
		Protection:	
	BM23309	CV Guards	142.31
	BM23884	Floor Mat - S4 *Front and rear mats.*	163.71
	BM23365	Front Brushguard	329.56
	BM23394	Front Fender Guards *Requires Front Brushguard*	175.49
	BM23362	Rear Bumper	186.19
	LP37038	Vehicle Cover (S4) - Black *Available through Order Zone*	In Catalog
	LP37039	Vehicle Cover (S4) - Camo *Available through Order Zone*	In Catalog
	LP37042	Vehicle Cover (S4) - Transportable (Black) *Available through Order Zone*	In Catalog
	LP37043	Vehicle Cover (S4) - Transportable (Camo) *Available through Order Zone*	In Catalog
		Sprayers / Pressure Washers:	
	LP39965	25 Gallon Bed Sprayer *Available through Order Zone*	In Catalog
	LP39964	45 Gallon Bed Sprayer *Available through Order Zone*	In Catalog
	LP39098	45 Gallon High Performance Bed Sprayer *Available through Order Zone*	In Catalog

XUV 550 S4 Olive & Black
Continued

CODE	ATTACHMENT IDENTIFIER	DESCRIPTION	SUGGESTED LIST PRICE USD ($)
		ATTACHMENTS FOR FIELD CONVERSION Continued...	
	LP20485	45 Gallon Tow-Behind Sprayer *Available through Order Zone*	In Catalog
	LP22885	HP 150 in. Precision Boom *Compatible with HP sprayers.* *Available through Order Zone.*	In Catalog
	LP39963	HP 45 Gallon Sprayer - Tow Behind *Available through Order Zone*	In Catalog
	LP22884	HP Boomless Nozzles *Compatible with HP sprayers.* *Available through Order Zone.*	In Catalog
	LP22911	HP Standard Gator Boom *Compatible with HP sprayers.* *Available through Order Zone.*	In Catalog
		Winch:	
	BM24019	Warn Winch (3,000 lbs) - S4 *Requires 2 In. Front Receiver Hitch with Recovery Loops for mounting.*	880.61
	BM21392	Winch Accessories Kit	129.47

XUV 550 S4 Green & Yellow

Equipment for Base Machine

ENGINE:
16 Engine HP*(570cc),
Dynamically tuned carburetor
Two-cylinder, Air-cooled
4-Cycle Gasoline
Full Pressure Lubrication System
Replaceable Single Dry-Type Element Air Cleaner with Remote Intake
4.9 Gallon (18.5L) Fuel Capacity
Solid-state Ignition (12V)
Spark-arresting Muffler
ELECTRICAL:
Electric Start
16 Amp Regulated, 3-Phase Alternator
340 CCA Battery
Two 55 Watt Halogen Headlights
TRANSAXLE/TRANSMISSION:
Continuously Variable Transmission
Full Clutch Enclosure
Two-speed Transaxle
Operator Selectable 4WD
28 mph (45 kph) Maximum Forward Speed
Selectable Four-Wheel Drive System
Front and Rear Hydraulic Disk Brakes with stainless steel rotors
Foot-operated Park brake
Large diameter half shafts with TPE boots
STEERING/SUSPENSION:
Rack and Pinion Steering
Indpendent Front Suspension (IRS) with 9 inches (229 mm) of travel
Independent Rear Suspension (IRS) with 8 inches (203mm) of travel
Integrated 2 In. Rear Receiver
19.7 ft. Turning Radius -- TBD
Ground Clearance: 9.3 In. (236 mm)
FRAME/STYLED PARTS:
Full, robotically welded frame design
Side frame rails for rock sliding
OCCUPANT PROTECTION SYSTEM(OPS):
1.75 In. (44.4 mm) Steel Tubular Overhead Structure
Multiple Passenger Handholds
3-pt. Seat Belts
SAE J2194 & OSHA ROPS Certified
OPERATOR STATION:
Bench Seats
Hip Restraint Bars for Driver and Passenger

Sealed Glove Box
Sealed Storage Compartment Under Hood
Fuel Gauge
Instrument Cluster - Hour Meter, and Seat Belt
12v DC Outlet
FRONTAL PROTECTION:
Integrated Front Bumper Accepts optional front receiver, winch and brush guard

DIMENSIONS(WITH OPS):
144 In. Long x 56.5 In. Wide x 74 In. High
PAYLOAD CAPACITY
1200 Lb (544 kg) Total Payload Capacity which Includes:
200 Lb (91 kg) Driver,
600 Lb (273 kg) Passenger, and 400 Lb (181 kg) in Cargo Box
Towing Capacity:
1,100 Lb (499kg)
CARGO BOX:
32.3 In. Long x 47.6 In. Wide x 11.7 In. Deep (82 cm x 120.9 cm x 29.7 cm)
8.9 cu. ft (.25 cu.m) Capacity
400 Lbs (181 kg) Box Capacity
Tilting Box , Open from both sides
Hinged (Bottom) Tailgate, Removeable
CONVERTIBLE CARGO RACK:
23.5 In. Long x 38.8 In. Wide x 8.1 In. Deep (59.7cm x 98.6 cm x 20.6 cm)
4.3 cu. ft (0.12 cu.m) Capacity
200 Lbs (90.7 kg) Rack Capacity

TIRES:
Front: 25x8-12 Terra Hawk (All Terrain Tires)
Rear: 25x10-12 Terra Hawk (All Terrain Tires)
SAFETY VIDEO TAPE:
Safety and Operational DVD
Operators Manual
*Engine HP is Provided by the Engine Manufacturer to be Used for Comparison Purposes Only, Actual Operating HP will be Less.

CODE	ATTACHMENT IDENTIFIER	DESCRIPTION	SUGGESTED LIST PRICE USD ($)

Select One Code From Each Required Category

BASE MACHINE

F.O.B. Janesville, Wisconsin

5150M	XUV 550 S4 Green & Yellow *Base Machine Suggested List Price Does Not Include $500 USD Destination Charge.*	9,599.00

DESTINATION

0202	US / CANADA	In Base Price
0230	Australia/New Zealand	Same Price
0195	MEXICO	Same Price

XUV 550 S4 Green & Yellow

Continued

CODE	ATTACHMENT IDENTIFIER	DESCRIPTION	SUGGESTED LIST PRICE USD ($)
		DESTINATION Continued...	
0250		ALL OTHER COUNTRIES	Same Price
		WHEELS WITH TIRES (FOUR)	
1000		Yellow Steel Wheels Terra Hawk All Terrain Tires	In Base Price
1001		Yellow Steel Wheels Ancla M-T Extreme Terrain Tire	Same Price
1002		Yellow Alloy Wheels Maxxis Bighorn Radial Tires	823.00
1003		Yellow Steel Wheels Directional Turf Tires	Same Price
		CARGO BOX LIFT	
3003		Manual Lift	In Base Price
3004		Cargo Box Power Lift	720.00
		OPS/BRAKE/TAILLIGHT	
4000		OPS *Must order 5110 option code when ordering 4000 option code.*	In Base Price
4002		OPS, XUV 550 with Brake/Taillight *Must order 5000 option code when ordering 4002 option code.*	50.00
		PROTECTION/UTILITY AND PROTECTION PACKAGES	
5000		Protection Package Package Consists of: Front Brushguard, OPS S4 Black Poly Roof, Cargo Box Rail, 5 Gallon Pail Holder.	972.00
5100		Utility and Protection Package Package Consists of: Front Brushguard, OPS S4 Black Poly Roof, Cargo Box Rail, 5 Gallon Pail Holder, Rear Bumper, 2 In. Front Receiver Hitch.	1,267.00
5110		Less Utility and Protection Package	In Base Price
		STORAGE	
6000		Front Seat Storage	102.00
6010		Less Front Seat Storage	In Base Price
		ATTACHMENTS FOR FIELD CONVERSION	
		Cabs/Roofs/Windshields:	
	BM23373	OPS Full No-Scratch Windshield	531.79
	BM23358	OPS Full Poly Windshield	362.73
	BM23376	OPS Glass Windshield w/ Wiper	714.76
	BM23375	OPS Half Poly Windshield	241.81

XUV 550 S4 Green & Yellow
Continued

CODE	ATTACHMENT IDENTIFIER	DESCRIPTION	SUGGESTED LIST PRICE USD ($)
		ATTACHMENTS FOR FIELD CONVERSION Continued...	
	BM24114	OPS Poly Cab - S4 *Includes front and rear doors, and rear panel. OPS Poly Roof and Windshield sold separately.*	4,297.11
	BM23398	OPS S4 Poly Roof - Black	494.34
	LP10314	OPS Side Mirror - Left *Available through Order Zone*	In Catalog
	LP10315	OPS Side Mirror - Right *Available through Order Zone*	In Catalog
	LP37048	OPS Soft Roof (S4) - Black *Available through Order Zone*	In Catalog
	BM24687	Replacement OPS Kit XUV 550 S4 *Includes Front and Rear OPS.*	765.06
		Cargo Box Options / Storage:	
	BM23849	5 Gallon Pail Holder *Cargo box rails required*	38.51
	BM23371	Box Mat	86.67
	BM23307	Cargo Box Power Lift	770.40
	BM23526	Cargo Box Rails	109.14
	BM23384	Cargo Box Wall Extensions *Requires cargo box rails.* *Not compatible with poly cab.*	329.56
	BM24094	Cargo Rack Screen	65.27
	BM23360	Front Rack *Requires Front Brushguard for mounting.*	241.81
	BM24200	Glove Box Lock	12.84
	LP37044	OPS Overhead Organizer - Black *Available through Order Zone*	In Catalog
	LP25929	Rhino Grip XL - Double *Requires cargo box rails.* *Available through Order Zone.*	In Catalog
	LP25928	Rhino Grip XL - Single *Requires cargo box rails.* *Available through Order Zone.*	In Catalog
	BM23385	Tire Rack *Requires cargo box rails.*	231.76
	BM23874	Underseat Storage	109.14
	BM24096	Vise Mount	53.50

XUV 550 S4 Green & Yellow
Continued

CODE	ATTACHMENT IDENTIFIER	DESCRIPTION	SUGGESTED LIST PRICE USD ($)
		ATTACHMENTS FOR FIELD CONVERSION Continued...	
		Carts / Hitches:	
	LPPCT10LXATV	10AT Cart *Available through Order Zone*	In Catalog
	LPPCT17ATJD	17AT Cart *Available through Order Zone.*	In Catalog
	BM23363	2" Front Receiver Hitch and Recovery Loops	109.14
	LPUT21JD	21 Steel Utility Cart *Available through Order Zone*	In Catalog
	PM05101	Ball Mount - 1.875 in. (48mm)	See Parts
	PM05201	Ball Mount - 2 in. (51mm)	See Parts
	BM22290	Drawbar - 2 in. (51mm)	38.51
		Custom & High Performance:	
	BM23438	High Capacity Alternator	714.76
	BM24171	Over-Temperature Sensor Kit	53.50
	BM22703	Seat-Belt Comfort Strap (2) *Also compatible with Deluxe Cab.*	77.04
	BM24376	Speedometer Kit	109.14
	BM23379	Stereo and Speaker Kit *Includes mounting kit only; must choose one of the following three head units to have complete stereo:* *Radio, Heavy Duty AM / FM / WB / AUX (SWJHD1120)* *Radio, Heavy Duty AM / FM / WB / SAT / I-POD (SWJHD1620)* *Radio, AM / FM / WB / CD / AUX / SAT Ready (SWJHD3620)* *Must order head unit through Parts.*	660.19
		Lights / Signals:	
	BM23369	Backup Alarm	101.66
	BM24013	Beacon Light *Requires OPS Light Kit Switch Bank. Also requires Brake and Tail Light Installation Kit, if 4002 / 4003 option code is not selected, for brake light mounting; OR OPS Poly Roof for roof mounting.*	219.36
	BM24233	Brake and Tail Light Installation Kit *Required to mount Brake and Tail Light Kit.*	33.17
	BM24100	Brake and Tail Light Kit *Requires Brake and Tail Light Installation Kit.*	53.50
	BM23367	Deluxe Light Kit *Includes flashers, turn signals (front & rear), brake & tail lights, and back-up lights. Requires OPS Poly Roof for installation.*	384.13
	BM23442	Hella HID Sport Driving Lights *Requires OPS Light Kit Switch Bank for OPS or poly roof mounting, or Front Brushguard for bumper mounting.*	935.19

XUV 550 S4 Green & Yellow
Continued

CODE	ATTACHMENT IDENTIFIER	DESCRIPTION	SUGGESTED LIST PRICE USD ($)
		ATTACHMENTS FOR FIELD CONVERSION Continued...	
	BM24108	Hella Performance Spot Lights *Requires OPS Light Kit Switch Bank for OPS or poly roof mounting, or Front Brushguard for bumper mounting.*	343.47
	BM23370	Horn Kit	97.37
	BM24090	Long Range Light Kit *Requires OPS Light Kit Switch Bank for OPS or Poly Roof mounting; or Front Brushguard for bumper mounting.*	191.53
	BM24016	Mid-Range Light Kit *Requires OPS Light Kit Switch Bank. Compatible with OPS Poly Roofs or on the OPS alone. Can be mounted on the front or rear of the OPS or poly roof. Can not be used for rear mounting on XUV550 S4.*	123.06
	BM24273	Mid-Range Light Kit (rear XUV550 S4 Only) *Requires OPS Light Kit Switch Bank. Compatible with OPS Poly Roofs, or on the OPS alone.*	123.06
	BM24089	OPS Light Kit Switch Bank *Accommodates up to three separate OPS Light Kits.*	67.41
		Protection:	
	BM23309	CV Guards	142.31
	BM23884	Floor Mat - S4 *Front and rear mats.*	163.71
	BM23365	Front Brushguard	329.56
	BM23394	Front Fender Guards *Requires Front Brushguard*	175.49
	BM23362	Rear Bumper	186.19
	LP37038	Vehicle Cover (S4) - Black *Available through Order Zone*	In Catalog
	LP37039	Vehicle Cover (S4) - Camo *Available through Order Zone*	In Catalog
	LP37042	Vehicle Cover (S4) - Transportable (Black) *Available through Order Zone*	In Catalog
	LP37043	Vehicle Cover (S4) - Transportable (Camo) *Available through Order Zone*	In Catalog
		Sprayers / Pressure Washers:	
	LP39965	25 Gallon Bed Sprayer *Available through Order Zone*	In Catalog
	LP39964	45 Gallon Bed Sprayer *Available through Order Zone*	In Catalog
	LP39098	45 Gallon High Performance Bed Sprayer *Available through Order Zone*	In Catalog

XUV 550 S4 Green & Yellow
Continued

CODE	ATTACHMENT IDENTIFIER	DESCRIPTION	SUGGESTED LIST PRICE USD ($)
		ATTACHMENTS FOR FIELD CONVERSION Continued...	
	LP20485	45 Gallon Tow-Behind Sprayer *Available through Order Zone*	In Catalog
	LP22885	HP 150 in. Precision Boom *Compatible with HP sprayers.* *Available through Order Zone.*	In Catalog
	LP39963	HP 45 Gallon Sprayer - Tow Behind *Available through Order Zone*	In Catalog
	LP22884	HP Boomless Nozzles *Compatible with HP sprayers.* *Available through Order Zone.*	In Catalog
	LP22911	HP Standard Gator Boom *Compatible with HP sprayers.* *Available through Order Zone.*	In Catalog
		Winch:	
	BM24019	Warn Winch (3,000 lbs) - S4 *Requires 2 In. Front Receiver Hitch with Recovery Loops for mounting.*	880.61
	BM21392	Winch Accessories Kit	129.47

XUV 550 S4 Camo

Equipment for Base Machine

ENGINE:
16 Engine HP*(570cc),
Dynamically tuned carburetor
Two-cylinder, Air-cooled
4-Cycle Gasoline
Full Pressure Lubrication
System
Replaceable Single Dry-Type
Element Air Cleaner with
Remote Intake
4.9 Gallon (18.5L) Fuel
Capacity
Solid-state Ignition (12V)
Spark-arresting Muffler
ELECTRICAL:
Electric Start
16 Amp Regulated, 3-Phase
Alternator
340 CCA Battery
Two 55 Watt Halogen
Headlights
TRANSAXLE/TRANSMISSION:
Continuously Variable
Transmission
Full Clutch Enclosure
Two-speed Transaxle
Operator Selectable 4WD
28 mph (45 kph) Maximum
Forward Speed
Selectable Four-Wheel
Drive System
Front and Rear Hydraulic Disk
Brakes with stainless steel
rotors
Foot-operated Park brake
Large diameter half shafts with
TPE boots
STEERING/SUSPENSION:
Rack and Pinion Steering
Indpendent Front Suspension
(IRS) with 9 inches (229 mm)
of travel
Independent Rear Suspension
(IRS) with 8 inches (203mm)
of travel
Integrated 2 In. Rear Receiver
19.7 ft. Turning Radius -- TBD
Ground Clearance: 9.3 In.
(236 mm)
FRAME/STYLED PARTS:
Full, robotically welded frame
design
Side frame rails for rock
sliding
OCCUPANT PROTECTION SYSTEM(OPS):
1.75 In. (44.4 mm) Steel Tubular
Overhead Structure
Multiple Passenger Handholds
3-pt. Seat Belts
SAE J2194 & OSHA ROPS Certified
OPERATOR STATION:
Bench Seats
Hip Restraint Bars for Driver
and Passenger

Sealed Glove Box
Sealed Storage Compartment Under
Hood
Fuel Gauge
Instrument Cluster - Hour Meter,
and Seat Belt
12v DC Outlet
FRONTAL PROTECTION:
Integrated Front Bumper
Accepts optional front
receiver, winch and brush guard

DIMENSIONS(WITH OPS):
144 In. Long x 56.5 In.
Wide x 74 In. High
PAYLOAD CAPACITY
1200 Lb (544 kg) Total Payload
Capacity which Includes:
200 Lb (91 kg) Driver,
600 Lb (273 kg) Passenger, and
400 Lb (181 kg) in Cargo Box
Towing Capacity:
1,100 Lb (499kg)
CARGO BOX:
32.3 In. Long x 47.6 In. Wide x
11.7 In. Deep
(82 cm x 120.9 cm x 29.7 cm)
8.9 cu. ft (.25 cu.m) Capacity
400 Lbs (181 kg) Box Capacity
Tilting Box , Open from both
sides
Hinged (Bottom) Tailgate,
Removeable
CONVERTIBLE CARGO RACK:
23.5 In. Long x 38.8 In. Wide x
8.1 In. Deep
(59.7cm x 98.6 cm x 20.6 cm)
4.3 cu. ft (0.12 cu.m) Capacity
200 Lbs (90.7 kg) Rack Capacity

TIRES:
Front: 25x8-12 Terra Hawk
(All Terrain Tires)
Rear: 25x10-12 Terra Hawk
(All Terrain Tires)
SAFETY VIDEO TAPE:
Safety and Operational DVD
Operators Manual
*Engine HP is Provided by the
Engine Manufacturer to be Used
for Comparison Purposes Only,
Actual Operating HP will be
Less.

CODE	ATTACHMENT IDENTIFIER	DESCRIPTION	SUGGESTED LIST PRICE USD ($)

Select One Code From Each Required Category

BASE MACHINE

F.O.B. Janesville, Wisconsin

5152M	XUV 550 S4 Camo *Base Machine Suggested List Price Does Not Include $500 USD Destination Charge.*	10,149.00

DESTINATION

0202	US / CANADA	In Base Price
0230	Australia/New Zealand	Same Price
0195	MEXICO	Same Price

XUV 550 S4 Camo

Continued

CODE	ATTACHMENT IDENTIFIER	DESCRIPTION	SUGGESTED LIST PRICE USD ($)
		DESTINATION Continued...	
0250		ALL OTHER COUNTRIES	Same Price
		WHEELS WITH TIRES (FOUR)	
1004		Black Steel Wheels Ancla M-T Extreme Terrain Tire	In Base Price
1005		Black Alloy Wheels Maxxis Bighorn Radical	823.00
1006		Silver Alloy Wheels Maxxis Bighorn Radial Tires	823.00
		CARGO BOX LIFT	
3003		Manual Lift	In Base Price
3004		Cargo Box Power Lift	720.00
		OPS/REAR SCREEN/BRAKE/TAILLIGHT	
4000		OPS	In Base Price
4002		OPS, XUV 550 with Brake/Taillight	50.00
		PROTECTION/UTILITY AND PROTECTION PACKAGES	
5000		Protection Package Package Consists of: Front Brushguard, OPS S4 Black Poly Roof, Cargo Box Rail, 5 Gallon Pail Holder.	972.00
5100		Utility and Protection Package Package Consists of: Front Brushguard, OPS S4 Black Poly Roof, Cargo Box Rail , 5 Gallon Pail Holder, Rear Bumper, 2 In. Front Reveiver Hitch.	1,267.00
5110		Less Utility and Protection Package	In Base Price
		STORAGE	
6000		Front Seat Storage	102.00
6010		Less Front Seat Storage	In Base Price
		Miscellaneous Items	
		Spanish North American Kit:	
9435		Spanish North American Operator's Manual and Decal Kit	No Charge
		ATTACHMENTS FOR FIELD CONVERSION	
		Cabs/Roofs/Windshields:	
	BM23373	OPS Full No-Scratch Windshield	531.79
	BM23358	OPS Full Poly Windshield	362.73
	BM23376	OPS Glass Windshield w/ Wiper	714.76
	BM23375	OPS Half Poly Windshield	241.81

XUV 550 S4 Camo
Continued

CODE	ATTACHMENT IDENTIFIER	DESCRIPTION	SUGGESTED LIST PRICE USD ($)
		ATTACHMENTS FOR FIELD CONVERSION Continued...	
	BM24114	OPS Poly Cab - S4 *Includes front and rear doors, and rear panel. OPS Poly Roof and Windshield sold separately.*	4,297.11
	BM23398	OPS S4 Poly Roof - Black	494.34
	LP10314	OPS Side Mirror - Left *Available through Order Zone*	In Catalog
	LP10315	OPS Side Mirror - Right *Available through Order Zone*	In Catalog
	LP37048	OPS Soft Roof (S4) - Black *Available through Order Zone*	In Catalog
	LP37049	OPS Soft Roof (S4) - Camo *Available through Order Zone*	In Catalog
	BM24687	Replacement OPS Kit XUV 550 S4 *Includes Front and Rear OPS.*	765.06
		Cargo Box Options / Storage:	
	BM23849	5 Gallon Pail Holder *Cargo box rails required*	38.51
	BM23371	Box Mat	86.67
	BM23307	Cargo Box Power Lift	770.40
	BM23526	Cargo Box Rails	109.14
	BM23384	Cargo Box Wall Extensions *Requires cargo box rails.* *Not compatible with poly cab.*	329.56
	BM24094	Cargo Rack Screen	65.27
	BM23360	Front Rack *Requires Front Brushguard for mounting.*	241.81
	BM24200	Glove Box Lock	12.84
	LP37044	OPS Overhead Organizer - Black *Available through Order Zone*	In Catalog
	LP37045	OPS Overhead Organizer - Camo *Available through Order Zone*	In Catalog
	LP25929	Rhino Grip XL - Double *Requires cargo box rails.* *Available through Order Zone.*	In Catalog
	LP25928	Rhino Grip XL - Single *Requires cargo box rails.* *Available through Order Zone.*	In Catalog
	BM23385	Tire Rack *Requires cargo box rails.*	231.76

XUV 550 S4 Camo
Continued

CODE	ATTACHMENT IDENTIFIER	DESCRIPTION	SUGGESTED LIST PRICE USD ($)
		ATTACHMENTS FOR FIELD CONVERSION Continued...	
	BM23874	Underseat Storage	109.14
	BM24096	Vise Mount	53.50
		Carts / Hitches:	
	LPPCT10LXATV	10AT Cart *Available through Order Zone*	In Catalog
	LPPCT17ATJD	17AT Cart *Available through Order Zone.*	In Catalog
	BM23363	2" Front Receiver Hitch and Recovery Loops	109.14
	LPUT21JD	21 Steel Utility Cart *Available through Order Zone*	In Catalog
	PM05101	Ball Mount - 1.875 in. (48mm)	See Parts
	PM05201	Ball Mount - 2 in. (51mm)	See Parts
	BM22290	Drawbar - 2 in. (51mm)	38.51
		Custom & High Performance:	
	BM23438	High Capacity Alternator	714.76
	BM24171	Over-Temperature Sensor Kit	53.50
	BM22703	Seat-Belt Comfort Strap (2) *Also compatible with Deluxe Cab.*	77.04
	BM24376	Speedometer Kit	109.14
	BM23379	Stereo and Speaker Kit *Includes mounting kit only; must choose one of the following three head units to have complete stereo:* *Radio, Heavy Duty AM / FM / WB / AUX (SWJHD1120)* *Radio, Heavy Duty AM / FM / WB / SAT / I-POD (SWJHD1620)* *Radio, AM / FM / WB / CD / AUX / SAT Ready (SWJHD3620)* *Must order head unit through Parts.*	660.19
		Lights / Signals:	
	BM23369	Backup Alarm	101.66
	BM24013	Beacon Light *Requires OPS Light Kit Switch Bank. Also requires Brake and Tail Light Installation Kit, if 4002 / 4003 option code is not selected, for brake light mounting; OR OPS Poly Roof for roof mounting.*	219.36
	BM24233	Brake and Tail Light Installation Kit *Required to mount Brake and Tail Light Kit.*	33.17
	BM24100	Brake and Tail Light Kit *Requires Brake and Tail Light Installation Kit.*	53.50
	BM23367	Deluxe Light Kit *Includes flashers, turn signals (front & rear), brake & tail lights, and back-up lights. Requires OPS Poly Roof for installation.*	384.13

XUV 550 S4 Camo
Continued

CODE	ATTACHMENT IDENTIFIER	DESCRIPTION	SUGGESTED LIST PRICE USD ($)
		ATTACHMENTS FOR FIELD CONVERSION Continued...	
	BM23442	Hella HID Sport Driving Lights *Requires OPS Light Kit Switch Bank for OPS or poly roof mounting, or Front Brushguard for bumper mounting.*	935.19
	BM24108	Hella Performance Spot Lights *Requires OPS Light Kit Switch Bank for OPS or poly roof mounting, or Front Brushguard for bumper mounting.*	343.47
	BM23370	Horn Kit	97.37
	BM24090	Long Range Light Kit *Requires OPS Light Kit Switch Bank for OPS or Poly Roof mounting; or Front Brushguard for bumper mounting.*	191.53
	BM24016	Mid-Range Light Kit *Requires OPS Light Kit Switch Bank. Compatible with OPS Poly Roofs or on the OPS alone. Can be mounted on the front or rear of the OPS or poly roof. Can not be used for rear mounting on XUV550 S4.*	123.06
	BM24273	Mid-Range Light Kit (rear XUV550 S4 Only) *Requires OPS Light Kit Switch Bank. Compatible with OPS Poly Roofs, or on the OPS alone.*	123.06
	BM24089	OPS Light Kit Switch Bank *Accommodates up to three separate OPS Light Kits.*	67.41
		Protection:	
	BM23309	CV Guards	142.31
	BM23884	Floor Mat - S4 *Front and rear mats.*	163.71
	BM23365	Front Brushguard	329.56
	BM23394	Front Fender Guards *Requires Front Brushguard*	175.49
	BM23362	Rear Bumper	186.19
	LP37038	Vehicle Cover (S4) - Black *Available through Order Zone*	In Catalog
	LP37039	Vehicle Cover (S4) - Camo *Available through Order Zone*	In Catalog
	LP37042	Vehicle Cover (S4) - Transportable (Black) *Available through Order Zone*	In Catalog
	LP37043	Vehicle Cover (S4) - Transportable (Camo) *Available through Order Zone*	In Catalog
		Sprayers / Pressure Washers:	
	LP39965	25 Gallon Bed Sprayer *Available through Order Zone*	In Catalog
	LP39964	45 Gallon Bed Sprayer *Available through Order Zone*	In Catalog

XUV 550 S4 Camo

Continued

CODE	ATTACHMENT IDENTIFIER	DESCRIPTION	SUGGESTED LIST PRICE USD ($)
		ATTACHMENTS FOR FIELD CONVERSION Continued...	
	LP39098	45 Gallon High Performance Bed Sprayer *Available through Order Zone*	In Catalog
	LP20485	45 Gallon Tow-Behind Sprayer *Available through Order Zone*	In Catalog
	LP22885	HP 150 in. Precision Boom *Compatible with HP sprayers.* *Available through Order Zone.*	In Catalog
	LP39963	HP 45 Gallon Sprayer - Tow Behind *Available through Order Zone*	In Catalog
	LP22884	HP Boomless Nozzles *Compatible with HP sprayers.* *Available through Order Zone.*	In Catalog
	LP22911	HP Standard Gator Boom *Compatible with HP sprayers.* *Available through Order Zone.*	In Catalog
		Winch:	
	BM24019	Warn Winch (3,000 lbs) - S4 *Requires 2 In. Front Receiver Hitch with Recovery Loops for mounting.*	880.61
	BM21392	Winch Accessories Kit	129.47
		SERVICE CONTRACTS - RESIDENTIAL OWNERS/USE	
		Visit http://www.JohnDeere.com/ServicePlans for more information on John Deere Service Contracts. May not be Available in Parts of the U.S., Not Available in Canada. Price may vary due to driving distance and/or time from machine to dealership location.	
		John Deere Extended Service Plan - 2-Year Option *Available for T-Series, HPX and XUV utility vehicles only.)* *2-year extended service plan. (1 year of extended service protection);* *2-years of warranty transportation.*	399.99
		John Deere Extended Service Plan - 3-Year Option *3-year extended service plan. (2 years of extended service protection);* *3-years of warranty transportation.*	569.99

Standard-Duty 66 In. Front Blade
(For XUV 550 and XUV 550 S4)

Equipment for Base Machine

```
66 In Wide Straight Blade
Five-Position Manual Angling
Two Adjusting Skid Shoes
Trip Protection
Replaceable Cutting Edge
```

CODE	ATTACHMENT IDENTIFIER	DESCRIPTION	SUGGESTED LIST PRICE USD ($)
		Select One Code From Each Required Category	
		BASE MACHINE	
8017M		Standard-Duty 66 In. Front Blade (For XUV 550 and XUV 550 S4) *Includes Front Blade, Lift Arms, and Lift Components. A winch is needed for blade lift operations and 2 in. front receiver hitch with recovery loops needed for mounting.*	1,080.00
		ATTACHMENTS FOR FIELD CONVERSION	
		Carts / Hitches:	
	BM23363	2" Front Receiver Hitch and Recovery Loops	109.14
		Miscellaneous:	
	BM23029	Plow Markers	38.51
		Winch:	
	BM24019	Warn Winch (3,000 lbs) - S4 *Requires 2 In. Front Receiver Hitch with Recovery Loops for mounting.*	880.61
	BM24437	Warn Winch (3000 lbs) *Requires 2 In. Front Receiver Hitch with Recovery Loops for mounting.*	770.40

XUV 625i Green & Yellow

Equipment for Base Machine

ENGINE:
22.5 Engine HP*(617cc),
Electronic Fuel Injection (EFI)
Two-cylinder, Liquid-cooled, 4-Cycle Gasoline
Full Pressure Lubrication System
Replaceable Single Dry-Type Element Air Cleaner with Remote Intake
7.0 Gallon (26.49L) Fuel Capacity
Solid-state Ignition (12V)
Spark-arresting Muffler
ELECTRICAL:
Electric Start
25.5 Amp Regulated, 3-Phase Alternator
340 CCA Battery
Two 37.5 Watt Halogen Headlights
TRANSAXLE/TRANSMISSION:
Continuously Variable Transmission
Full Clutch Enclosure
Two-speed Transaxle
Operator Selectable 4WD
30 mph (48 kph) Maximum Forward Speed
On-demand True Four-Wheel Drive System
Auto Locking Front Differential
Traction Assist
Front and Rear Hydraulic Disk Brakes
Hand-operated Sealed Wet Disk Park brake
1.3 In. (27mm) Forged Rear Axles
STEERING/SUSPENSION:
Rack and Pinion Steering
Independent Front Suspension (IRS) with 8 inches (203mm) of travel
Independent Rear Suspension (IRS) with 9 inches (228.6mm) of travel
Integrated 2" Rear Receiver
12.4 ft. Turning Radius
Ground Clearance: 11 In. (267 mm)
Ground Clearance (Under Foot Platform): 12.25 In (311 mm)
FRAME/STYLED PARTS:
Hydroform Technology Frame
PC/ASA (JDLOY) Hood and Fenders
OCCUPANT PROTECTION SYSTEM(OPS):
1.75 In. (44.4 mm) Steel Tubular Overhead Structure
Multiple Passenger Handholds
3-pt. Seat Belts
SAE J2194 & OSHA ROPS Certified
OPERATOR STATION:
High-back Bucket Seats
7 In. (178 mm) Slide Rail Adjustment on Driver's Seat
Hip Restraint Bars for Driver and Passenger
Passenger Grab Handles
Glove Box
Storage Compartment Under Hood
Two Cup Holders
Instrument gauge with 4 wheel-drive indicator, RPM, MPH/KPH, time of day, fuel level, total miles and hour meters
12v DC Outlet
FRONTAL PROTECTION:
Heavy-Duty Front Bumper
Integrated 2 Inch Front Receiver Hitch
DIMENSIONS(WITH OPS):
116 In. Long x 62 In. Wide x 75 In. High
PAYLOAD CAPACITY:
1,400 Lb (635 kg) Total Payload Capacity which Includes:
200 Lb (91 kg) Driver,
200 Lb (91 kg) Passenger, and 1000 Lb (454 kg) in Cargo Box
Towing Capacity:
1,500 Lb (680kg)
CARGO BOX:
45 In. Long x 52 In. Wide x 12 In. Dee (1,143mm x 1321mm x 305mm)
16.4 cu. ft (.46 cu.m) Capacity
1000 Lbs (454 kg) Box Capacity
Tilting Box
Hinged (Bottom) Tailgate
Load Guard
TIRES:
Front: 26x9-12 Ancla XT (Extreme Terrain Tires)
Rear: 26x11-12 Ancla XT (Extreme Terrain Tires)
SAFETY VIDEO TAPE:
Safety and Operational DVD
Operators Manual
*Engine HP is Provided by the Engine Manufacturer to be Used for Comparison Purposes Only, Actual Operating HP will be Less.

CODE	ATTACHMENT IDENTIFIER	DESCRIPTION	SUGGESTED LIST PRICE USD ($)

Select One Code From Each Required Category

BASE MACHINE

F.O.B. Janesville, Wisconsin

3946M	XUV 625i Green & Yellow *Base Machine Suggested List Price Does Not Include $400 USD Destination Charge.*	10,499.00

DESTINATION

0202	US/Canada	In Base Price
0230	Australia/New Zealand	Same Price
0195	Mexico	Same Price
0250	All Other Countries	Same Price

XUV 625i Green & Yellow

Continued

CODE	ATTACHMENT IDENTIFIER	DESCRIPTION	SUGGESTED LIST PRICE USD ($)
		DESTINATION Continued...	
		WHEELS WITH TIRES (FOUR)	
1000		Yellow Steel Wheels Terra Hawk All Terrain Tires	Same Price
1001		Yellow Steel Wheels Ancla M-T Extreme Terrain Tire	In Base Price
1002		Yellow Alloy Wheels Maxxis Bighorn Radial Tires	823.00
		DRIVER SEAT	
2000		21 In. Standard XUV HB Seat - Yellow	In Base Price
2001		Bench Seat - Yellow	Same Price
2002		High Performance Sport Seat - Black	296.00
		DELUXE CARGO BOX	
3000		Deluxe Cargo Box - with Paint	In Base Price
3001		Deluxe Cargo Box - with Polyurea	264.00
3002		Deluxe Cargo Box with Polyurea Liner, Brake, Tail, Reverse Lights & Light Protector	496.00
		OVERHEAD PROTECTION STRUCTURES (OPS)	
4000		OPS	In Base Price
4002		Deluxe Cab Frame/Including Windshield, Wiper, Electrical Kit and Rear Window	2,368.00
4008		OPS with Black Poly Roof	416.00
		POWER AND FRONT PROTECTION PACKAGE	
5000		Power and Front Protection Package Package Consists of: Power Lift, Heavy Duty Front Brushguard, Heavy Duty Front Fender Guard, Floor Mats *Package Priced at 10% discount.*	1,261.00
5010		Manual Lift *Must order 5010 option code when ordering 6000 option code.*	In Base Price
		REAR PROTECTION PACKAGE	
5100		Rear Protection Package Package Consists of: Rear Bumper, Bed Mat, Cargo Box Heavy Duty Fender Guards *Package Priced at 10% discount.*	494.00
5110		Less Rear Protection Package	In Base Price
		FRONT BRUSH GUARD	
6000		Heavy Duty Front Brushguard	233.00
6010		Less Front Brush Guard *Must order 6010 option code when ordering 5000 option code.*	In Base Price

XUV 625i Green & Yellow
Continued

CODE	ATTACHMENT IDENTIFIER	DESCRIPTION	SUGGESTED LIST PRICE USD ($)
		MUFFLER	
6100		Standard Muffler	In Base Price
		HOOD RACK	
6300		Front Hood Rack XUV *Must order 5000 or 6000 option code when ordering 6300 option code.*	226.00
6310		Less Front Hood Rack XUV *Must order 6310 option code when ordering 4002 option code.*	In Base Price
		Attachments-Order as Desired	
		Spanish North American Kit:	
9435		Spanish North American Operator's Manual and Decal Kit	No Charge
		ATTACHMENTS FOR FIELD CONVERSION	
		Blades:	
	LP25355	Heavy Duty POWERtach Blade - 72" *Available through Order Zone*	In Catalog
	LPPK140	POWERtach Deflector Shield *Available through Order Zone*	In Catalog
	LPPK120	POWERtach Markers *Available through Order Zone*	In Catalog
	LPPWBK72	POWERtach Poly Wear Bar *Available through Order Zone*	In Catalog
	LPPK150	POWERtach Rubber Squeegee *Available through Order Zone*	In Catalog
	LPPK160	POWERtach Skid Shoes *Available through Order Zone*	In Catalog
		Cabs/Roofs/Windshields:	
	BM23768	Air Cleaner Relocation Kit (Gas) *Quiet Cab Kit for Deluxe Cab. Requires Noise Reduction Kit. Can also be used with Poly Cab for noise reduction.*	11.77
	BM23608	Cab Heater *Requires Cab Heater Fitting Kit.*	1,130.99
	VGB10547	Cab Heater Fitting Kit	142.31
	BM23498	Deluxe Cab Frame *Requires Seat Belt Kit, Glass Door Kit, Glass Windshield with Wiper, and Rear Window Kit to complete full Deluxe Cab.*	1,443.43
	VGB10505	Electrical Kit *Required for field installed Deluxe cabs.*	94.16
	BM24560	Glass Door Kit - Deluxe Cab	2,427.83
	BM23507	Glass Windshield with Wiper - Deluxe Cab	874.19

XUV 625i Green & Yellow
Continued

CODE	ATTACHMENT IDENTIFIER	DESCRIPTION	SUGGESTED LIST PRICE USD ($)
		ATTACHMENTS FOR FIELD CONVERSION Continued...	
	BM21656	Interior Light Kit - Deluxe Cab *Requires Electrical Kit.*	58.86
	BM23750	Noise Reduction Kit (Gas & Diesel) *Quiet Cab Kit for Deluxe Cab. Requires Air Cleaner Relocation Kit.*	373.43
	BM23742	OPS Full No-Scratch Windshield *Not compatible with Deluxe Cab Frame. Compatible with poly cab.*	531.79
	BM23741	OPS Full Poly Windshield *Not compatible with Deluxe Cab Frame. Compatible with poly cab.*	423.71
	BM23743	OPS Glass Windshield with Wiper *Not compatible with Deluxe Cab Frame. Compatible with poly cab.*	874.19
	BM23740	OPS Half Poly Windshield *Not compatible with Deluxe Cab Frame.*	339.19
	BM24115	OPS Poly Roof - Black	445.11
	BM24561	OPS Rear Panel *Part of the Poly cab, or can be mounted on the OPS alone. Requires full windshield, poly cab doors, and poly roof to complete poly cab.*	502.90
	LP10314	OPS Side Mirror - Left *Available through Order Zone.*	In Catalog
	LP10315	OPS Side Mirror - Right *Available through Order Zone.*	In Catalog
	LP93127	OPS Soft Roof - Black *Available through Order Zone*	In Catalog
	BM24117	Poly Cab Doors *Includes left and right doors, with side mirrors. Requires full windshield, OPS rear panel, and poly roof to complete poly cab.*	2,675.00
	BM23505	Rear Window Kit - Deluxe Cab	225.77
	BM23755	Seat Belt Kit *Required with Deluxe Cab Frame*	144.46
	BM23508	Side Mirrors - Deluxe Cab	129.47
	BM21646	Visor (1) Kit - Deluxe cab	70.61
	BM23534	Windshield Washer Fluid Kit - Deluxe Cab *Requires Electrical Kit.*	173.34
		Cargo Box Options / Storage:	
	BM23849	5 Gallon Pail Holder	38.51
	BM22772	Cargo Box Bed Mat	119.84
	BM22769	Cargo Box Divider	191.53
	BM22811	Cargo Box FenderGuard *Requires Rear Bumper*	191.53

XUV 625i Green & Yellow
Continued

CODE	ATTACHMENT IDENTIFIER	DESCRIPTION	SUGGESTED LIST PRICE USD ($)
		ATTACHMENTS FOR FIELD CONVERSION Continued...	
	BM23694	Cargo Box Power Lift Kit	858.14
	BM22774	Cargo Box Side Extension Kit	511.46
	LP19880	Deluxe Cargo Box Cover - Black *Available through Order Zone*	In Catalog
	BM22980	Front Hood Rack *Requires Front Brush Guard.*	241.81
	LP30320	Fuel Pack *Available through Order Zone*	In Catalog
	LP19878	Gator Gear Organizer - Black *Available through Order Zone*	In Catalog
	LP19886	Gator Tool Box *Contact Dealer for pricing.*	In Catalog
	LP93117	OPS Overhead Organizer - Black *Available through Order Zone*	In Catalog
	LP46485	Ratcheting Rhino Grip *Available through Order Zone.*	In Catalog
	LP25929	Rhino Grip XL - Double *Available through Order Zone.*	In Catalog
	LP25928	Rhino Grip XL - Single *Available through Order Zone.*	In Catalog
	LP19882	Saw Press Bracket *Available through Order Zone*	In Catalog
	BM22775	Side Tool Rack	304.96
	LP93207	Soft Rear Screen and Organizer - Black *Available through Order Zone*	In Catalog
		Carts / Hitches:	
	LPPCT10LXATV	10AT Cart *Available through Order Zone*	In Catalog
	LPPCT17ATJD	17AT Cart *Available through Order Zone.*	In Catalog
	LPUT21JD	21 Steel Utility Cart *Available through Order Zone*	In Catalog
	PM05101	Ball Mount - 1.875 in. (48mm)	See Parts
	PM05201	Ball Mount - 2 in. (51mm)	See Parts
	BM22290	Drawbar - 2 in. (51mm)	38.51
		Custom & High Performance:	
	BM24021	Fox ® High Performance Racing Shox	1,758.01

XUV 625i Green & Yellow
Continued

CODE	ATTACHMENT IDENTIFIER	DESCRIPTION	SUGGESTED LIST PRICE USD ($)
		ATTACHMENTS FOR FIELD CONVERSION Continued...	
	BM23585	High Capacity Alternator	356.31
	BM22703	Seat-Belt Comfort Strap (2) *Also compatible with Deluxe Cab.*	77.04
	BM23691	Speed Limiter Kit	101.66
	BM24453	Stereo Mounting Kit *Includes mounting kit only; must choose one of the following three head units to have complete stereo:* *Radio, Heavy Duty AM / FM / WB / AUX (SWJHD1120)* *Radio, Heavy Duty AM / FM / WB / SAT / I-POD (SWJHD1620)* *Radio, AM / FM / WB / CD / AUX / SAT Ready (SWJHD3620)* *Must order head unit through Parts. Stereo Mounting Kit not compatible with Deluxe Cab.*	521.09
		Hunting / Camo:	
	LP19884	Cargo Box Gun Mount - Black *Available through Order Zone*	In Catalog
	LP10319	Gun Mount Kit - Overhead *Includes 2 Gun Boot VI.* *Available through Order Zone*	In Catalog
	LP93103	Vehicle Cover, Cab / ROPS - Camo *Fits all Models Equipped with OPS and Deluxe Cab Structure.* *Available through Order Zone*	In Catalog
		Lights / Signals:	
	BM24726	Backup Alarm	74.56
	BM24013	Beacon Light *Requires OPS Poly Roof and OPS Switch Bank.*	219.36
	BM21649	Beacon Light Kit - Deluxe Cab *Requires Electrical Kit.*	371.29
	BM24591	Brake / Tail Light Kit	160.50
	BM24586	Deluxe Signal Light Kit *Includes Turn Signals (Front & Rear), 4-Way Flashers, Brake, Tail & Reverse Lights.*	374.50
	BM24587	Deluxe Signal Light Kit *Includes Turn Signals (Front & Rear) and 4-Way Flashers. Compatible with the 825i and 825i S4 vehicles equipped with the 3000 cargo box option code or 625i, 855D and 855D S4 vehicles equipped with the 3002 Cargo Box option code which already includes the brake & tail lights.*	171.20
	BM21651	Front Light Kit - Deluxe Cab *Requires Electrical Kit.*	293.19
	BM23442	Hella HID Sport Driving Lights *Requires OPS Switch Bank for OPS or poly roof mounting, or Front Brushguard for bumper mounting.*	935.19
	BM24108	Hella Performance Spot Lights *Requires OPS Switch Bank for OPS or poly roof mounting, or Front Brushguard for bumper mounting.*	343.47
	BM23370	Horn Kit	97.37

XUV 625i Green & Yellow
Continued

CODE	ATTACHMENT IDENTIFIER	DESCRIPTION	SUGGESTED LIST PRICE USD ($)
		ATTACHMENTS FOR FIELD CONVERSION Continued...	
	BM24090	Long Range Light Kit *Can also mount behind front bumper cover directly to frame.* *Requires OPS Switch Bank for OPS or poly roof mounting, or Front Brushguard for brushguard mounting.*	191.53
	BM24016	Mid-Range Light Kit *Requires OPS Switch Bank for OPS or poly roof mounting. Can be installed on the front or rear of OPS or roof.*	123.06
	BM24089	OPS Switch Bank *Accommodates up to three separate OPS accessory kits.*	67.41
	BM21652	Rear Light Kit - Deluxe Cab *Requires Electrical Kit.*	217.21
		Protection:	
	BM24282	Floormat *Also front floormat on S4*	78.11
	BM24463	Front CV Guards	114.49
	BM22987	Heavy Duty Fender Guard *Compatible with Standard Front Bumper.*	215.07
	BM22841	Heavy Duty Front Brush Guard	249.31
	BM22767	Heavy Duty Rear Bumper	236.47
	BM22962	Rear CV Guards	114.49
	BM23119	Skid Plate Kit	101.66
	BM22773	Tail Light Protectors	89.89
	LP93107	Vehicle Cover, Cab / ROPS - Black *Available through Order Zone.*	In Catalog
		Sprayers / Pressure Washers:	
	LP33597	25 Gallon Bed Sprayer *Available through Order Zone*	In Catalog
	LP19490	25 Gallon Portable Sprayer *Available through Order Zone*	In Catalog
	LP20852	45 Gallon Bed Sprayer *Available through Order Zone*	In Catalog
	LP22908	45 Gallon High Performance Sprayer *Available through Order Zone*	In Catalog
	LP20485	45 Gallon Tow-Behind Sprayer *Available through Order Zone*	In Catalog
	LP20853	90 Gallon Bed Sprayer *Available through Order Zone*	In Catalog
	LP22909	90 Gallon High Performance Bed Sprayer *Available through Order Zone*	In Catalog

XUV 625i Green & Yellow
Continued

CODE	ATTACHMENT IDENTIFIER	DESCRIPTION	SUGGESTED LIST PRICE USD ($)
		ATTACHMENTS FOR FIELD CONVERSION Continued...	
	LPGP2700GH	GatorPal High Pressure Washer (2700 psi, Honda engine) *Contact Dealer for pricing.*	In Catalog
	LPGP2700GS	GatorPal High Pressure Washer (2700 psi, Subaru engine) *Contact Dealer for pricing.*	In Catalog
	LPGP3000GH	GatorPal High Pressure Washer (3000 psi, Honda engine) *Contact Dealer for pricing.*	In Catalog
	LPGP3000GS	GatorPal High Pressure Washer (3000 psi, Subaru engine) *Contact Dealer for pricing.*	In Catalog
	LP22885	HP 150 in. Precision Boom *Compatible with all High Performance Sprayers* *Available through Order Zone*	In Catalog
	LP39963	HP 45 Gallon Sprayer - Tow Behind *Available through Order Zone*	In Catalog
	LP22884	HP Boomless Nozzles *Compatible with all High Performance Sprayers* *Available through Order Zone*	In Catalog
	LP22911	HP Standard Gator Boom *Compatible with all High Performance Sprayers* *Available through Order Zone*	In Catalog
		Winch:	
	BM24443	Warn® Winch (3000 lb) *Requires 2-Inch Receiver Multi-Mount Kit for Front or Rear Receiver Mount.*	770.40
	BM23105	Winch - 2 Inch Receiver Multi-Mount Kit	225.77
	BM21392	Winch Accessories Kit *Accessory kit includes 1/2" shackle, 9,000 lbs. maximum capacity snatch block, (2) 1"x8' tree trunk protectors, and (1) pair of WARN winching gloves.*	129.47
		SERVICE CONTRACTS - RESIDENTIAL OWNERS/USE	
		Visit http://www.JohnDeere.com/ServicePlans for more information on John Deere Service Contracts. May not be Available in Parts of the U.S., Not Available in Canada. Price may vary due to driving distance and/or time from machine to dealership location.	
		John Deere Extended Service Plan - 2-Year Option *Available for T-Series, HPX and XUV utility vehicles only.)* *2-year extended service plan. (1 year of extended service protection);* *2-years of warranty transportation.*	399.99
		John Deere Extended Service Plan - 3-Year Option *3-year extended service plan. (2 years of extended service protection);* *3-years of warranty transportation.*	569.99

XUV 625i Olive & Black

Equipment for Base Machine

ENGINE:
22.5 Engine HP*(617cc),
Electronic Fuel Injection (EFI)
Two-cylinder, Liquid-cooled, 4-Cycle Gasoline
Full Pressure Lubrication System
Replaceable Single Dry-Type Element Air Cleaner with Remote Intake
7.0 Gallon (26.49L) Fuel Capacity
Solid-state Ignition (12V)
Spark-arresting Muffler
ELECTRICAL:
Electric Start
25.5 Amp Regulated, 3-Phase Alternator
340 CCA Battery
Two 37.5 Watt Halogen Headlights
TRANSAXLE/TRANSMISSION:
Continuously Variable Transmission
Full Clutch Enclosure
Two-speed Transaxle
Operator Selectable 4WD
30 mph (48 kph) Maximum Forward Speed
On-demand True Four-Wheel Drive System
Auto Locking Front Differential
Traction Assist
Front and Rear Hydraulic Disk Brakes
Hand-operated Sealed Wet Disk Park brake
1.3 In. (27mm) Forged Rear Axles
STEERING/SUSPENSION:
Rack and Pinion Steering
Independent Front Suspension (IRS) with 8 inches (203mm) of travel
Independent Rear Suspension (IRS) with 9 inches (228.6mm) of travel
Integrated 2" Rear Receiver
12.4 ft. Turning Radius
Ground Clearance: 11 In. (267 mm)
Ground Clearance (Under Foot Platform): 12.25 In (311 mm)
FRAME/STYLED PARTS:
Hydroform Technology Frame
PC/ASA (JDLOY) Hood and Fenders
OCCUPANT PROTECTION SYSTEM(OPS):
1.75 In. (44.4 mm) Steel Tubular Overhead Structure
Multiple Passenger Handholds
3-pt. Seat Belts
SAE J2194 & OSHA ROPS Certified
OPERATOR STATION:
High-back Bucket Seats
7 In. (178 mm) Slide Rail Adjustment on Driver's Seat
Hip Restraint Bars for Driver and Passenger
Passenger Grab Handles
Glove Box
Storage Compartment Under Hood
Two Cup Holders
Instrument gauge with 4 wheel-drive indicator, RPM, MPH/KPH, time of day, fuel level, total miles and hour meters
12v DC Outlet
FRONTAL PROTECTION:
Heavy-Duty Front Bumper
Integrated 2 Inch Front Receiver Hitch
DIMENSIONS(WITH OPS):
116 In. Long x 62 In. Wide x 75 In. High
PAYLOAD CAPACITY:
1,400 Lb (635 kg) Total Payload Capacity which Includes:
200 Lb (91 kg) Driver,
200 Lb (91 kg) Passenger, and 1000 Lb (454 kg) in Cargo Box
Towing Capacity:
1,500 Lb (680kg)
CARGO BOX:
45 In. Long x 52 In. Wide x 12 In. Dee (1,143mm x 1321mm x 305mm)
16.4 cu. ft (.46 cu.m) Capacity
1000 Lbs (454 kg) Box Capacity
Tilting Box
Hinged (Bottom) Tailgate
Load Guard
TIRES:
Front: 26x9-12 Ancla XT (Extreme Terrain Tires)
Rear: 26x11-12 Ancla XT (Extreme Terrain Tires)
SAFETY VIDEO TAPE:
Safety and Operational DVD
Operators Manual
*Engine HP is Provided by the Engine Manufacturer to be Used for Comparison Purposes Only, Actual Operating HP will be Less.

CODE	ATTACHMENT IDENTIFIER	DESCRIPTION	SUGGESTED LIST PRICE USD ($)

Select One Code From Each Required Category

BASE MACHINE

F.O.B. Janesville, Wisconsin

3947M	XUV 625i Olive & Black *Base Machine Suggested List Price Does Not Include $400 USD Destination Charge.*	10,599.00

DESTINATION

0202	US/Canada	In Base Price
0230	Australia/New Zealand	Same Price
0195	Mexico	Same Price
0250	All Other Countries	Same Price

XUV 625i Olive & Black

Continued

CODE	ATTACHMENT IDENTIFIER	DESCRIPTION	SUGGESTED LIST PRICE USD ($)
		DESTINATION Continued...	
		WHEELS WITH TIRES (FOUR)	
1000		Black Steel Wheels Terra Hawk All Terrain Tires	Same Price
1001		Black Steel Wheels Ancla M-T Extreme Terrain Tire	In Base Price
1002		Black Alloy Wheels Maxxis Bighorn Radial Tires	823.00
1003		Silver Alloy Wheels Maxxis Bighorn Radial Tires	823.00
		DRIVER SEAT	
2000		21 In. Standard XUV HB Seat - Black	In Base Price
2001		Bench Seat - Black	Same Price
2002		High Performance Sport Seat - Black	296.00
		DELUXE CARGO BOX	
3000		Deluxe Cargo Box - with Paint	In Base Price
3001		Deluxe Cargo Box - with Polyurea	264.00
3002		Deluxe Cargo Box with Polyurea Liner, Brake, Tail, Reverse Lights & Light Protector	496.00
		OVERHEAD PROTECTION STRUCTURES (OPS)	
4000		OPS	In Base Price
4002		Deluxe Cab Frame/Including Windshield, Wiper, Electrical Kit and Rear Window	2,368.00
4008		OPS with Black Poly Roof	416.00
		POWER AND FRONT PROTECTION PACKAGE	
5000		Power and Front Protection Package Package Consists of: Power Lift, Heavy Duty Front Brushguard, Heavy Duty Front Fender Guard, Floor Mats *Package Priced at 10% discount.*	1,261.00
5010		Manual Lift *Must order 5010 option code when ordering 6000 option code.*	In Base Price
		REAR PROTECTION PACKAGE	
5100		Rear Protection Package Package Consists of: Rear Bumper, Bed Mat, Cargo Box Heavy Duty Fender Guards *Package Priced at 10% discount.*	494.00
5110		Less Rear Protection Package	In Base Price
		FRONT BRUSH GUARD	
6000		Heavy Duty Front Brushguard	233.00
6010		Less Front Brush Guard	In Base Price

XUV 625i Olive & Black
Continued

CODE	ATTACHMENT IDENTIFIER	DESCRIPTION	SUGGESTED LIST PRICE USD ($)
		FRONT BRUSH GUARD Continued...	
		Must order 6010 option code when ordering 5000 option code.	
		MUFFLER	
6100		Standard Muffler	In Base Price
		HOOD RACK	
6300		Front Hood Rack XUV	226.00
		Must order 5000 or 6000 option code when ordering 6300 option code.	
6310		Less Front Hood Rack XUV	In Base Price
		Must order 6310 option code when ordering 4002 option code.	
		Attachments-Order as Desired	
		Spanish North American Kit:	
9435		Spanish North American Operator's Manual and Decal Kit	No Charge
		ATTACHMENTS FOR FIELD CONVERSION	
		Blades:	
	LP25355	Heavy Duty POWERtach Blade - 72"	In Catalog
		Available through Order Zone	
	LPPK140	POWERtach Deflector Shield	In Catalog
		Available through Order Zone	
	LPPK120	POWERtach Markers	In Catalog
		Available through Order Zone	
	LPPWBK72	POWERtach Poly Wear Bar	In Catalog
		Available through Order Zone	
	LPPK150	POWERtach Rubber Squeegee	In Catalog
		Available through Order Zone	
	LPPK160	POWERtach Skid Shoes	In Catalog
		Available through Order Zone	
		Cabs/Roofs/Windshields:	
	BM23768	Air Cleaner Relocation Kit (Gas)	11.77
		Quiet Cab Kit for Deluxe Cab. Requires Noise Reduction Kit. Can also be used with Poly Cab for noise reduction.	
	BM23608	Cab Heater	1,130.99
		Requires Cab Heater Fitting Kit.	
	VGB10547	Cab Heater Fitting Kit	142.31
	BM23498	Deluxe Cab Frame	1,443.43
		Requires Seat Belt Kit, Glass Door Kit, Glass Windshield with Wiper, and Rear Window Kit to complete full Deluxe Cab.	

XUV 625i Olive & Black
Continued

CODE	ATTACHMENT IDENTIFIER	DESCRIPTION	SUGGESTED LIST PRICE USD ($)
		ATTACHMENTS FOR FIELD CONVERSION Continued...	
	VGB10505	Electrical Kit *Required for field installed Deluxe cabs.*	94.16
	BM24560	Glass Door Kit - Deluxe Cab	2,427.83
	BM23507	Glass Windshield with Wiper - Deluxe Cab	874.19
	BM21656	Interior Light Kit - Deluxe Cab *Requires Electrical Kit.*	58.86
	BM23750	Noise Reduction Kit (Gas & Diesel) *Quiet Cab Kit for Deluxe Cab. Requires Air Cleaner Relocation Kit.*	373.43
	BM23742	OPS Full No-Scratch Windshield *Not compatible with Deluxe Cab Frame. Compatible with poly cab.*	531.79
	BM23741	OPS Full Poly Windshield *Not compatible with Deluxe Cab Frame. Compatible with poly cab.*	423.71
	BM23743	OPS Glass Windshield with Wiper *Not compatible with Deluxe Cab Frame. Compatible with poly cab.*	874.19
	BM23740	OPS Half Poly Windshield *Not compatible with Deluxe Cab Frame.*	339.19
	BM24115	OPS Poly Roof - Black	445.11
	BM24561	OPS Rear Panel *Part of the Poly cab, or can be mounted on the OPS alone. Requires full windshield, poly cab doors, and poly roof to complete poly cab.*	502.90
	LP10314	OPS Side Mirror - Left *Available through Order Zone.*	In Catalog
	LP10315	OPS Side Mirror - Right *Available through Order Zone.*	In Catalog
	LP93127	OPS Soft Roof - Black *Available through Order Zone*	In Catalog
	BM24117	Poly Cab Doors *Includes left and right doors, with side mirrors. Requires full windshield, OPS rear panel, and poly roof to complete poly cab.*	2,675.00
	BM23505	Rear Window Kit - Deluxe Cab	225.77
	BM23755	Seat Belt Kit *Required with Deluxe Cab Frame*	144.46
	BM23508	Side Mirrors - Deluxe Cab	129.47
	BM21646	Visor (1) Kit - Deluxe cab	70.61
	BM23534	Windshield Washer Fluid Kit - Deluxe Cab *Requires Electrical Kit.*	173.34
		Cargo Box Options / Storage:	
	BM23849	5 Gallon Pail Holder	38.51

XUV 625i Olive & Black
Continued

CODE	ATTACHMENT IDENTIFIER	DESCRIPTION	SUGGESTED LIST PRICE USD ($)
		ATTACHMENTS FOR FIELD CONVERSION Continued...	
	BM22772	Cargo Box Bed Mat	119.84
	BM22769	Cargo Box Divider	191.53
	BM22811	Cargo Box FenderGuard *Requires Rear Bumper*	191.53
	BM23694	Cargo Box Power Lift Kit	858.14
	BM22774	Cargo Box Side Extension Kit	511.46
	LP19880	Deluxe Cargo Box Cover - Black *Available through Order Zone*	In Catalog
	BM22980	Front Hood Rack *Requires Front Brush Guard.*	241.81
	LP30320	Fuel Pack *Available through Order Zone*	In Catalog
	LP19878	Gator Gear Organizer - Black *Available through Order Zone*	In Catalog
	LP19886	Gator Tool Box *Contact Dealer for pricing.*	In Catalog
	LP93117	OPS Overhead Organizer - Black *Available through Order Zone*	In Catalog
	LP46485	Ratcheting Rhino Grip *Available through Order Zone.*	In Catalog
	LP25929	Rhino Grip XL - Double *Available through Order Zone.*	In Catalog
	LP25928	Rhino Grip XL - Single *Available through Order Zone.*	In Catalog
	LP19882	Saw Press Bracket *Available through Order Zone*	In Catalog
	BM22775	Side Tool Rack	304.96
	LP93207	Soft Rear Screen and Organizer - Black *Available through Order Zone*	In Catalog
		Carts / Hitches:	
	LPPCT10LXATV	10AT Cart *Available through Order Zone*	In Catalog
	LPPCT17ATJD	17AT Cart *Available through Order Zone.*	In Catalog
	LPUT21JD	21 Steel Utility Cart *Available through Order Zone*	In Catalog
	PM05101	Ball Mount - 1.875 in. (48mm)	See Parts

XUV 625i Olive & Black
Continued

CODE	ATTACHMENT IDENTIFIER	DESCRIPTION	SUGGESTED LIST PRICE USD ($)
		ATTACHMENTS FOR FIELD CONVERSION Continued...	
	PM05201	Ball Mount - 2 in. (51mm)	See Parts
	BM22290	Drawbar - 2 in. (51mm)	38.51
		Custom & High Performance:	
	BM24021	Fox ® High Performance Racing Shox	1,758.01
	BM23585	High Capacity Alternator	356.31
	BM22703	Seat-Belt Comfort Strap (2) *Also compatible with Deluxe Cab.*	77.04
	BM23691	Speed Limiter Kit	101.66
	BM24453	Stereo Mounting Kit *Includes mounting kit only; must choose one of the following three head units to have complete stereo:* *Radio, Heavy Duty AM / FM / WB / AUX (SWJHD1120)* *Radio, Heavy Duty AM / FM / WB / SAT / I-POD (SWJHD1620)* *Radio, AM / FM / WB / CD / AUX / SAT Ready (SWJHD3620)* *Must order head unit through Parts. Stereo Mounting Kit not compatible with Deluxe Cab.*	521.09
		Hunting / Camo:	
	LP19884	Cargo Box Gun Mount - Black *Available through Order Zone*	In Catalog
	LP10319	Gun Mount Kit - Overhead *Includes 2 Gun Boot VI.* *Available through Order Zone*	In Catalog
	LP93103	Vehicle Cover, Cab / ROPS - Camo *Fits all Models Equipped with OPS and Deluxe Cab Structure.* *Available through Order Zone*	In Catalog
		Lights / Signals:	
	BM24726	Backup Alarm	74.56
	BM24013	Beacon Light *Requires OPS Poly Roof and OPS Switch Bank.*	219.36
	BM21649	Beacon Light Kit - Deluxe Cab *Requires Electrical Kit.*	371.29
	BM24591	Brake / Tail Light Kit	160.50
	BM24586	Deluxe Signal Light Kit *Includes Turn Signals (Front & Rear), 4-Way Flashers, Brake, Tail & Reverse Lights.*	374.50
	BM24587	Deluxe Signal Light Kit *Includes Turn Signals (Front & Rear) and 4-Way Flashers. Compatible with the 825i and 825i S4 vehicles equipped with the 3000 cargo box option code or 625i, 855D and 855D S4 vehicles equipped with the 3002 Cargo Box option code which already includes the brake & tail lights.*	171.20
	BM21651	Front Light Kit - Deluxe Cab *Requires Electrical Kit.*	293.19

XUV 625i Olive & Black
Continued

CODE	ATTACHMENT IDENTIFIER	DESCRIPTION	SUGGESTED LIST PRICE USD ($)
		ATTACHMENTS FOR FIELD CONVERSION Continued...	
	BM23442	Hella HID Sport Driving Lights *Requires OPS Switch Bank for OPS or poly roof mounting, or Front Brushguard for bumper mounting.*	935.19
	BM24108	Hella Performance Spot Lights *Requires OPS Switch Bank for OPS or poly roof mounting, or Front Brushguard for bumper mounting.*	343.47
	BM23370	Horn Kit	97.37
	BM24090	Long Range Light Kit *Can also mount behind front bumper cover directly to frame.* *Requires OPS Switch Bank for OPS or poly roof mounting, or Front Brushguard for brushguard mounting.*	191.53
	BM24016	Mid-Range Light Kit *Requires OPS Switch Bank for OPS or poly roof mounting. Can be installed on the front or rear of OPS or roof.*	123.06
	BM24089	OPS Switch Bank *Accommodates up to three separate OPS accessory kits.*	67.41
	BM21652	Rear Light Kit - Deluxe Cab *Requires Electrical Kit.*	217.21
		Protection:	
	BM24282	Floormat *Also front floormat on S4*	78.11
	BM24463	Front CV Guards	114.49
	BM22987	Heavy Duty Fender Guard *Compatible with Standard Front Bumper.*	215.07
	BM22841	Heavy Duty Front Brush Guard	249.31
	BM22767	Heavy Duty Rear Bumper	236.47
	BM22962	Rear CV Guards	114.49
	BM23119	Skid Plate Kit	101.66
	BM22773	Tail Light Protectors	89.89
	LP93107	Vehicle Cover, Cab / ROPS - Black *Available through Order Zone.*	In Catalog
		Sprayers / Pressure Washers:	
	LP33597	25 Gallon Bed Sprayer *Available through Order Zone*	In Catalog
	LP19490	25 Gallon Portable Sprayer *Available through Order Zone*	In Catalog
	LP20852	45 Gallon Bed Sprayer *Available through Order Zone*	In Catalog

XUV 625i Olive & Black
Continued

CODE	ATTACHMENT IDENTIFIER	DESCRIPTION	SUGGESTED LIST PRICE USD ($)
		ATTACHMENTS FOR FIELD CONVERSION Continued...	
	LP22908	45 Gallon High Performance Sprayer *Available through Order Zone*	In Catalog
	LP20485	45 Gallon Tow-Behind Sprayer *Available through Order Zone*	In Catalog
	LP20853	90 Gallon Bed Sprayer *Available through Order Zone*	In Catalog
	LP22909	90 Gallon High Performance Bed Sprayer *Available through Order Zone*	In Catalog
	LPGP2700GH	GatorPal High Pressure Washer (2700 psi, Honda engine) *Contact Dealer for pricing.*	In Catalog
	LPGP2700GS	GatorPal High Pressure Washer (2700 psi, Subaru engine) *Contact Dealer for pricing.*	In Catalog
	LPGP3000GH	GatorPal High Pressure Washer (3000 psi, Honda engine) *Contact Dealer for pricing.*	In Catalog
	LPGP3000GS	GatorPal High Pressure Washer (3000 psi, Subaru engine) *Contact Dealer for pricing.*	In Catalog
	LP22885	HP 150 in. Precision Boom *Compatible with all High Performance Sprayers* *Available through Order Zone*	In Catalog
	LP39963	HP 45 Gallon Sprayer - Tow Behind *Available through Order Zone*	In Catalog
	LP22884	HP Boomless Nozzles *Compatible with all High Performance Sprayers* *Available through Order Zone*	In Catalog
	LP22911	HP Standard Gator Boom *Compatible with all High Performance Sprayers* *Available through Order Zone*	In Catalog
		Winch:	
	BM24443	Warn® Winch (3000 lb) *Requires 2-Inch Receiver Multi-Mount Kit for Front or Rear Receiver Mount.*	770.40
	BM23105	Winch - 2 Inch Receiver Multi-Mount Kit	225.77
	BM21392	Winch Accessories Kit *Accessory kit includes 1/2" shackle, 9,000 lbs. maximum capacity snatch block, (2) 1"x8' tree trunk protectors, and (1) pair of WARN winching gloves.*	129.47
		SERVICE CONTRACTS - RESIDENTIAL OWNERS/USE	
		Visit http://www.JohnDeere.com/ServicePlans for more information on John Deere Service Contracts. May not be Available in Parts of the U.S., Not Available in Canada. Price may vary due to driving distance and/or time from machine to dealership location.	
		John Deere Extended Service Plan - 2-Year Option *Available for T-Series, HPX and XUV utility vehicles only.)* *2-year extended service plan. (1 year of extended service protection);*	399.99

XUV 625i Olive & Black
Continued

CODE	ATTACHMENT IDENTIFIER	DESCRIPTION	SUGGESTED LIST PRICE USD ($)
		SERVICE CONTRACTS - RESIDENTIAL OWNERS/USE Continued...	
		2-years of warranty transportation.	
		John Deere Extended Service Plan - 3-Year Option	569.99
		3-year extended service plan. (2 years of extended service protection);	
		3-years of warranty transportation.	

XUV 625i Camo

Equipment for Base Machine

ENGINE:
22.5 Engine HP*(617cc),
Electronic Fuel Injection (EFI)
Two-cylinder, Liquid-cooled, 4-Cycle Gasoline
Full Pressure Lubrication System
Replaceable Single Dry-Type Element Air Cleaner with Remote Intake
7.0 Gallon (26.49L) Fuel Capacity
Solid-state Ignition (12V)
Spark-arresting Muffler
ELECTRICAL:
Electric Start
25.5 Amp Regulated, 3-Phase Alternator
340 CCA Battery
Two 37.5 Watt Halogen Headlights
TRANSAXLE/TRANSMISSION:
Continuously Variable Transmission
Full Clutch Enclosure
Two-speed Transaxle
Operator Selectable 4WD
30 mph (48 kph) Maximum Forward Speed
On-demand True Four-Wheel Drive System
Auto Locking Front Differential
Traction Assist
Front and Rear Hydraulic Disk Brakes
Hand-operated Sealed Wet Disk Park brake
1.3 In. (27mm) Forged Rear Axles
STEERING/SUSPENSION:
Rack and Pinion Steering
Independent Front Suspension (IRS) with 8 inches (203mm) of travel
Independent Rear Suspension (IRS) with 9 inches (228.6mm) of travel
Integrated 2" Rear Receiver
12.4 ft. Turning Radius
Ground Clearance: 11 In. (267 mm)
Ground Clearance (Under Foot Platform): 12.25 In (311 mm)
FRAME/STYLED PARTS:
Hydroform Technology Frame
PC/ASA (JDLOY) Hood and Fenders
OCCUPANT PROTECTION SYSTEM(OPS):
1.75 In. (44.4 mm) Steel Tubular Overhead Structure
Multiple Passenger Handholds
3-pt. Seat Belts
SAE J2194 & OSHA ROPS Certified
OPERATOR STATION:
High-back Bucket Seats
7 In. (178 mm) Slide Rail Adjustment on Driver's Seat
Hip Restraint Bars for Driver and Passenger
Passenger Grab Handles
Glove Box
Storage Compartment Under Hood
Two Cup Holders
Instrument gauge with 4 wheel-drive indicator, RPM, MPH/KPH, time of day, fuel level, total miles and hour meters
12v DC Outlet
FRONTAL PROTECTION:
Heavy-Duty Front Bumper
Integrated 2 Inch Front Receiver Hitch
DIMENSIONS(WITH OPS):
116 In. Long x 62 In. Wide x 75 In. High
PAYLOAD CAPACITY:
1,400 Lb (635 kg) Total Payload Capacity which Includes:
200 Lb (91 kg) Driver,
200 Lb (91 kg) Passenger, and 1000 Lb (454 kg) in Cargo Box
Towing Capacity:
1,500 Lb (680kg)
CARGO BOX:
45 In. Long x 52 In. Wide x 12 In. Dee (1,143mm x 1321mm x 305mm)
16.4 cu. ft (.46 cu.m) Capacity
1000 Lbs (454 kg) Box Capacity
Tilting Box
Hinged (Bottom) Tailgate
Load Guard
TIRES:
Front: 26x9-12 Ancla XT (Extreme Terrain Tires)
Rear: 26x11-12 Ancla XT (Extreme Terrain Tires)
SAFETY VIDEO TAPE:
Safety and Operational DVD
Operators Manual
*Engine HP is Provided by the Engine Manufacturer to be Used for Comparison Purposes Only, Actual Operating HP will be Less.

CODE	ATTACHMENT IDENTIFIER	DESCRIPTION	SUGGESTED LIST PRICE USD ($)

Select One Code From Each Required Category

BASE MACHINE

F.O.B. Janesville, Wisconsin

3948M	XUV 625i Camo *Base Machine Suggested List Price Does Not Include $400 USD Destination Charge.*	11,049.00

DESTINATION

0202	US/Canada	In Base Price
0230	Australia/New Zealand	Same Price
0195	Mexico	Same Price
0250	All Other Countries	Same Price

XUV 625i Camo
Continued

CODE	ATTACHMENT IDENTIFIER	DESCRIPTION	SUGGESTED LIST PRICE USD ($)
		DESTINATION Continued...	
		WHEELS WITH TIRES (FOUR)	
1000		Black Steel Wheels Terra Hawk All Terrain Tires	Same Price
1001		Black Steel Wheels Ancla M-T Extreme Terrain Tire	In Base Price
1002		Black Alloy Wheels Maxxis Bighorn Radial Tires	823.00
1003		Silver Alloy Wheels Maxxis Bighorn Radial Tires	823.00
		DRIVER SEAT	
2000		21 In. Standard XUV HB Seat - Black	In Base Price
2001		Bench Seat - Black	Same Price
2002		High Performance Sport Seat - Black	296.00
		DELUXE CARGO BOX	
3000		Deluxe Cargo Box - with Paint	In Base Price
3001		Deluxe Cargo Box - with Polyurea	264.00
3002		Deluxe Cargo Box with Polyurea Liner, Brake, Tail, Reverse Lights & Light Protector	496.00
		OVERHEAD PROTECTION STRUCTURES (OPS)	
4000		OPS	In Base Price
4002		Deluxe Cab Frame/Including Windshield, Wiper, Electrical Kit and Rear Window	2,368.00
4008		OPS with Black Poly Roof	416.00
		POWER AND FRONT PROTECTION PACKAGE	
5000		Power and Front Protection Package Package Consists of: Power Lift, Heavy Duty Front Brushguard, Heavy Duty Front Fender Guard, Floor Mats *Package Priced at 10% discount.*	1,261.00
5010		Manual Lift *Must order 5010 option code when ordering 6000 option code.*	In Base Price
		REAR PROTECTION PACKAGE	
5100		Rear Protection Package Package Consists of: Rear Bumper, Bed Mat, Cargo Box Heavy Duty Fender Guards *Package Priced at 10% discount.*	494.00
5110		Less Rear Protection Package	In Base Price
		FRONT BRUSH GUARD	
6000		Heavy Duty Front Brushguard	233.00
6010		Less Front Brush Guard	In Base Price

XUV 625i Camo
Continued

CODE	ATTACHMENT IDENTIFIER	DESCRIPTION	SUGGESTED LIST PRICE USD ($)
		FRONT BRUSH GUARD Continued...	
		Must order 6010 option code when ordering 5000 option code.	
		MUFFLER	
6100		Standard Muffler	In Base Price
		HOOD RACK	
6300		Front Hood Rack XUV	226.00
		Must order 5000 or 6000 option code when ordering 6300 option code.	
6310		Less Front Hood Rack XUV	In Base Price
		Must order 6310 option code when ordering 4002 option code.	
		Attachments-Order as Desired	
		Spanish North American Kit:	
9435		Spanish North American Operator's Manual and Decal Kit	No Charge
		ATTACHMENTS FOR FIELD CONVERSION	
		Blades:	
	LP25355	Heavy Duty POWERtach Blade - 72"	In Catalog
		Available through Order Zone	
	LPPK140	POWERtach Deflector Shield	In Catalog
		Available through Order Zone	
	LPPK120	POWERtach Markers	In Catalog
		Available through Order Zone	
	LPPWBK72	POWERtach Poly Wear Bar	In Catalog
		Available through Order Zone	
	LPPK150	POWERtach Rubber Squeegee	In Catalog
		Available through Order Zone	
	LPPK160	POWERtach Skid Shoes	In Catalog
		Available through Order Zone	
		Cabs/Roofs/Windshields:	
	BM23768	Air Cleaner Relocation Kit (Gas)	11.77
		Quiet Cab Kit for Deluxe Cab. Requires Noise Reduction Kit. Can also be used with Poly Cab for noise reduction.	
	BM23608	Cab Heater	1,130.99
		Requires Cab Heater Fitting Kit.	
	VGB10547	Cab Heater Fitting Kit	142.31
	BM23498	Deluxe Cab Frame	1,443.43
		Requires Seat Belt Kit, Glass Door Kit, Glass Windshield with Wiper, and Rear Window Kit to complete full Deluxe Cab.	

XUV 625i Camo
Continued

CODE	ATTACHMENT IDENTIFIER	DESCRIPTION	SUGGESTED LIST PRICE USD ($)
		ATTACHMENTS FOR FIELD CONVERSION Continued...	
	VGB10505	Electrical Kit *Required for field installed Deluxe cabs.*	94.16
	BM24560	Glass Door Kit - Deluxe Cab	2,427.83
	BM23507	Glass Windshield with Wiper - Deluxe Cab	874.19
	BM21656	Interior Light Kit - Deluxe Cab *Requires Electrical Kit.*	58.86
	BM23750	Noise Reduction Kit (Gas & Diesel) *Quiet Cab Kit for Deluxe Cab. Requires Air Cleaner Relocation Kit.*	373.43
	BM23742	OPS Full No-Scratch Windshield *Not compatible with Deluxe Cab Frame. Compatible with poly cab.*	531.79
	BM23741	OPS Full Poly Windshield *Not compatible with Deluxe Cab Frame. Compatible with poly cab.*	423.71
	BM23743	OPS Glass Windshield with Wiper *Not compatible with Deluxe Cab Frame. Compatible with poly cab.*	874.19
	BM23740	OPS Half Poly Windshield *Not compatible with Deluxe Cab Frame.*	339.19
	BM24115	OPS Poly Roof - Black	445.11
	BM24320	OPS Poly Roof - Camo	802.50
	BM24561	OPS Rear Panel *Part of the Poly cab, or can be mounted on the OPS alone. Requires full windshield, poly cab doors, and poly roof to complete poly cab.*	502.90
	LP10314	OPS Side Mirror - Left *Available through Order Zone.*	In Catalog
	LP10315	OPS Side Mirror - Right *Available through Order Zone.*	In Catalog
	LP93127	OPS Soft Roof - Black *Available through Order Zone*	In Catalog
	LP93123	OPS Soft Roof - Camo *Available through Order Zone*	In Catalog
	BM24117	Poly Cab Doors *Includes left and right doors, with side mirrors. Requires full windshield, OPS rear panel, and poly roof to complete poly cab.*	2,675.00
	BM23505	Rear Window Kit - Deluxe Cab	225.77
	BM23755	Seat Belt Kit *Required with Deluxe Cab Frame*	144.46
	BM23508	Side Mirrors - Deluxe Cab	129.47
	BM21646	Visor (1) Kit - Deluxe cab	70.61

XUV 625i Camo
Continued

CODE	ATTACHMENT IDENTIFIER	DESCRIPTION	SUGGESTED LIST PRICE USD ($)
		ATTACHMENTS FOR FIELD CONVERSION Continued...	
	BM23534	Windshield Washer Fluid Kit - Deluxe Cab *Requires Electrical Kit.*	173.34
		Cargo Box Options / Storage:	
	BM23849	5 Gallon Pail Holder	38.51
	BM22772	Cargo Box Bed Mat	119.84
	BM22769	Cargo Box Divider	191.53
	BM22811	Cargo Box FenderGuard *Requires Rear Bumper*	191.53
	BM23694	Cargo Box Power Lift Kit	858.14
	BM22774	Cargo Box Side Extension Kit	511.46
	LP19880	Deluxe Cargo Box Cover - Black *Available through Order Zone*	In Catalog
	BM22980	Front Hood Rack *Requires Front Brush Guard.*	241.81
	LP30320	Fuel Pack *Available through Order Zone*	In Catalog
	LP19878	Gator Gear Organizer - Black *Available through Order Zone*	In Catalog
	LP19886	Gator Tool Box *Contact Dealer for pricing.*	In Catalog
	LP93117	OPS Overhead Organizer - Black *Available through Order Zone*	In Catalog
	LP93113	OPS Overhead Organizer - Camo *Available through Order Zone*	In Catalog
	LP46485	Ratcheting Rhino Grip *Available through Order Zone.*	In Catalog
	LP25929	Rhino Grip XL - Double *Available through Order Zone.*	In Catalog
	LP25928	Rhino Grip XL - Single *Available through Order Zone.*	In Catalog
	LP19882	Saw Press Bracket *Available through Order Zone*	In Catalog
	BM22775	Side Tool Rack	304.96
	LP93207	Soft Rear Screen and Organizer - Black *Available through Order Zone*	In Catalog
		Carts / Hitches:	
	LPPCT10LXATV	10AT Cart *Available through Order Zone*	In Catalog

XUV 625i Camo
Continued

CODE	ATTACHMENT IDENTIFIER	DESCRIPTION	SUGGESTED LIST PRICE USD ($)
		ATTACHMENTS FOR FIELD CONVERSION Continued...	
	LPPCT17ATJD	17AT Cart *Available through Order Zone.*	In Catalog
	LPUT21JD	21 Steel Utility Cart *Available through Order Zone*	In Catalog
	PM05101	Ball Mount - 1.875 in. (48mm)	See Parts
	PM05201	Ball Mount - 2 in. (51mm)	See Parts
	BM22290	Drawbar - 2 in. (51mm)	38.51
		Custom & High Performance:	
	BM24021	Fox ® High Performance Racing Shox	1,758.01
	BM23585	High Capacity Alternator	356.31
	BM22703	Seat-Belt Comfort Strap (2) *Also compatible with Deluxe Cab.*	77.04
	BM23691	Speed Limiter Kit	101.66
	BM24453	Stereo Mounting Kit *Includes mounting kit only; must choose one of the following three head units to have complete stereo:* *Radio, Heavy Duty AM / FM / WB / AUX (SWJHD1120)* *Radio, Heavy Duty AM / FM / WB / SAT / I-POD (SWJHD1620)* *Radio, AM / FM / WB / CD / AUX / SAT Ready (SWJHD3620)* *Must order head unit through Parts. Stereo Mounting Kit not compatible with Deluxe Cab.*	521.09
		Hunting / Camo:	
	LP19884	Cargo Box Gun Mount - Black *Available through Order Zone*	In Catalog
	LP19879	Deluxe Cargo Box Cover- Camo *Available through Order Zone*	In Catalog
	LP19877	Gator Gear Organizer (Camo) *Available through Order Zone*	In Catalog
	LP10319	Gun Mount Kit - Overhead *Includes 2 Gun Boot VI.* *Available through Order Zone*	In Catalog
	LP93103	Vehicle Cover, Cab / ROPS - Camo *Fits all Models Equipped with OPS and Deluxe Cab Structure.* *Available through Order Zone*	In Catalog
		Lights / Signals:	
	BM24726	Backup Alarm	74.56
	BM24013	Beacon Light *Requires OPS Poly Roof and OPS Switch Bank.*	219.36
	BM21649	Beacon Light Kit - Deluxe Cab *Requires Electrical Kit.*	371.29
	BM24591	Brake / Tail Light Kit	160.50

XUV 625i Camo
Continued

CODE	ATTACHMENT IDENTIFIER	DESCRIPTION	SUGGESTED LIST PRICE USD ($)
		ATTACHMENTS FOR FIELD CONVERSION Continued...	
	BM24586	Deluxe Signal Light Kit *Includes Turn Signals (Front & Rear), 4-Way Flashers, Brake, Tail & Reverse Lights.*	374.50
	BM24587	Deluxe Signal Light Kit *Includes Turn Signals (Front & Rear) and 4-Way Flashers. Compatible with the 825i and 825i S4 vehicles equipped with the 3000 cargo box option code or 625i, 855D and 855D S4 vehicles equipped with the 3002 Cargo Box option code which already includes the brake & tail lights.*	171.20
	BM21651	Front Light Kit - Deluxe Cab *Requires Electrical Kit.*	293.19
	BM23442	Hella HID Sport Driving Lights *Requires OPS Switch Bank for OPS or poly roof mounting, or Front Brushguard for bumper mounting.*	935.19
	BM24108	Hella Performance Spot Lights *Requires OPS Switch Bank for OPS or poly roof mounting, or Front Brushguard for bumper mounting.*	343.47
	BM23370	Horn Kit	97.37
	BM24090	Long Range Light Kit *Can also mount behind front bumper cover directly to frame.* *Requires OPS Switch Bank for OPS or poly roof mounting, or Front Brushguard for brushguard mounting.*	191.53
	BM24016	Mid-Range Light Kit *Requires OPS Switch Bank for OPS or poly roof mounting. Can be installed on the front or rear of OPS or roof.*	123.06
	BM24089	OPS Switch Bank *Accommodates up to three separate OPS accessory kits.*	67.41
	BM21652	Rear Light Kit - Deluxe Cab *Requires Electrical Kit.*	217.21
		Protection:	
	BM24282	Floormat *Also front floormat on S4*	78.11
	BM24463	Front CV Guards	114.49
	BM22987	Heavy Duty Fender Guard *Compatible with Standard Front Bumper.*	215.07
	BM22841	Heavy Duty Front Brush Guard	249.31
	BM22767	Heavy Duty Rear Bumper	236.47
	BM22962	Rear CV Guards	114.49
	BM23119	Skid Plate Kit	101.66
	BM22773	Tail Light Protectors	89.89
	LP93107	Vehicle Cover, Cab / ROPS - Black *Available through Order Zone.*	In Catalog

XUV 625i Camo
Continued

CODE	ATTACHMENT IDENTIFIER	DESCRIPTION	SUGGESTED LIST PRICE USD ($)
		ATTACHMENTS FOR FIELD CONVERSION Continued...	
		Sprayers / Pressure Washers:	
	LP33597	25 Gallon Bed Sprayer *Available through Order Zone*	In Catalog
	LP19490	25 Gallon Portable Sprayer *Available through Order Zone*	In Catalog
	LP20852	45 Gallon Bed Sprayer *Available through Order Zone*	In Catalog
	LP22908	45 Gallon High Performance Sprayer *Available through Order Zone*	In Catalog
	LP20485	45 Gallon Tow-Behind Sprayer *Available through Order Zone*	In Catalog
	LP20853	90 Gallon Bed Sprayer *Available through Order Zone*	In Catalog
	LP22909	90 Gallon High Performance Bed Sprayer *Available through Order Zone*	In Catalog
	LPGP2700GH	GatorPal High Pressure Washer (2700 psi, Honda engine) *Contact Dealer for pricing.*	In Catalog
	LPGP2700GS	GatorPal High Pressure Washer (2700 psi, Subaru engine) *Contact Dealer for pricing.*	In Catalog
	LPGP3000GH	GatorPal High Pressure Washer (3000 psi, Honda engine) *Contact Dealer for pricing.*	In Catalog
	LPGP3000GS	GatorPal High Pressure Washer (3000 psi, Subaru engine) *Contact Dealer for pricing.*	In Catalog
	LP22885	HP 150 in. Precision Boom *Compatible with all High Performance Sprayers* *Available through Order Zone*	In Catalog
	LP39963	HP 45 Gallon Sprayer - Tow Behind *Available through Order Zone*	In Catalog
	LP22884	HP Boomless Nozzles *Compatible with all High Performance Sprayers* *Available through Order Zone*	In Catalog
	LP22911	HP Standard Gator Boom *Compatible with all High Performance Sprayers* *Available through Order Zone*	In Catalog
		Winch:	
	BM24443	Warn® Winch (3000 lb) *Requires 2-Inch Receiver Multi-Mount Kit for Front or Rear Receiver Mount.*	770.40
	BM23105	Winch - 2 Inch Receiver Multi-Mount Kit	225.77
	BM21392	Winch Accessories Kit *Accessory kit includes 1/2" shackle, 9,000 lbs. maximum capacity snatch block, (2) 1"x8' tree trunk protectors, and (1) pair of WARN winching gloves.*	129.47

XUV 625i Camo

Continued

CODE	ATTACHMENT IDENTIFIER	DESCRIPTION	SUGGESTED LIST PRICE USD ($)
		SERVICE CONTRACTS - RESIDENTIAL OWNERS/USE	
		Visit http://www.JohnDeere.com/ServicePlans for more information on John Deere Service Contracts. May not be Available in Parts of the U.S., Not Available in Canada. Price may vary due to driving distance and/or time from machine to dealership location.	
		John Deere Extended Service Plan - 2-Year Option *Available for T-Series, HPX and XUV utility vehicles only.)* *2-year extended service plan. (1 year of extended service protection);* *2-years of warranty transportation.*	399.99
		John Deere Extended Service Plan - 3-Year Option *3-year extended service plan. (2 years of extended service protection);* *3-years of warranty transportation.*	569.99

XUV 825i Green & Yellow

Equipment for Base Machine

ENGINE:
50 Engine HP*(812cc),
Electronic Fuel Injection (EFI)
Three Cylinder, Liquid-cooled, Dual Overhead Cams, 4-Cycle Gasoline
Full Pressure Lubrication System
Replaceable Single Dry-Type Element Air Cleaner with Remote Intake
7.0 Gallon (26.49L) Fuel Capacity
Solid-state Ignition (12V)
Spark-arresting Muffler
ELECTRICAL:
Electric Start
75 Amp Alternator
340 CCA Battery
Two 37.5 Watt Halogen Headlights
Brake and Tail Lights
TRANSAXLE/TRANSMISSION:
Continuously Variable Transmission
Full Clutch Enclosure
Two-speed Transaxle
Operator Selectable 4WD
44 mph (70 kph) Maximum Forward Speed
On-demand True Four-Wheel Drive System
Auto Locking Front Differential Traction Assist
Front and Rear Hydraulic Disk Brakes
Hand-operated Sealed Wet Disk Park brake
1.3 In. (27mm) Forged Rear Axles
STEERING/SUSPENSION:
Rack and Pinion Steering
Independent Front Suspension (IRS) with 8 inches (203mm) of travel
Independent Rear Suspension (IRS) with 9 inches (228.6mm) of travel
Integrated 2" Rear Receiver
12.4 ft. Turning Radius
Ground Clearance: 11 In. (267 mm)
Ground Clearance (Under Foot Platform): 12.25 In (311 mm)
FRAME/STYLED PARTS:
Hydroform Technology Frame
PC/ASA (JDLOY) Hood and Fenders
OCCUPANT PROTECTION SYSTEM(OPS):
1.75 In. (44.4 mm) Steel Tubular Overhead Structure
Multiple Passenger Handholds
3-pt. Seat Belts
SAE J2194 & OSHA ROPS Certified
OPERATOR STATION:
High-back Bucket Seats
7 In. (178 mm) Slide Rail Adjustment on Driver's Seat
Hip Restraint Bars for Driver and Passenger
Passenger Grab Handles
Glove Box
Storage Compartment Under Hood
Two Cup Holders
Instrument gauge with 4 wheel-drive indicator, RPM, MPH/KPH, time of day, fuel level, total miles and hour meters
12v DC Outlet
Digital Instrument Cluster with (Speed MPH, KH/h, RPM, Hour meter, Odometer with trip, Clock, Water Temp.4WD notice)
FRONTAL PROTECTION:
Heavy-Duty Front Bumper
Integrated 2 Inch Front Receiver Hitch
REAR PROTECTION:
Skid Plate and Close Out Panel
DIMENSIONS(WITH OPS):
119 In. Long x 62 In. Wide x 75 Inches High
PAYLOAD CAPACITY:
1,400 Lb (635 kg) Total Payload Capacity which Includes:
200 Lb (91 kg) Driver,
200 Lb (91 kg) Passenger, and 1000 Lb (454 kg) in Cargo Box
Towing Capacity:
1,500 Lb (680kg)
CARGO BOX:
45 In. Long x 52 In. Wide x 12 In. Deep (1,143mm x 1321mm x 305mm)
16.4cu. ft (.46 cu.m) Capacity
1000 Lbs (454 kg) Box Capacity
Tilting Box
Hinged (Bottom) Tailgate
Load Guard
TIRES:
Front: 26x9-12 Ancla XT (Extreme Terrain Tires)
Rear: 26x11-12 Ancla XT (Extreme Terrain Tires)
SAFETY VIDEO TAPE:
Safety and Operational DVD
Operators Manual
*Engine HP is Provided by the Engine Manufacturer to be Used for Comparison Purposes Only, Actual Operating HP will be Less.

CODE	ATTACHMENT IDENTIFIER	DESCRIPTION	SUGGESTED LIST PRICE USD ($)

Select One Code From Each Required Category

BASE MACHINE

F.O.B. Janesville, Wisconsin

397FM	XUV 825i Green & Yellow *Base Machine Suggested List Price Does Not Include $400 USD Destination Charge.*	11,799.00

DESTINATION

0202	US/Canada	In Base Price
0230	Australia/New Zealand	Same Price

XUV 825i Green & Yellow
Continued

CODE	ATTACHMENT IDENTIFIER	DESCRIPTION	SUGGESTED LIST PRICE USD ($)
		DESTINATION Continued...	
0195		Mexico	Same Price
0250		All Other Countries	Same Price
0179		Europe	312.00
		WHEELS WITH TIRES (FOUR)	
1000		Yellow Steel Wheels Terra Hawk All Terrain Tires	Same Price
1001		Yellow Steel Wheels Ancla M-T Extreme Terrain Tire	In Base Price
1002		Yellow Alloy Wheels Maxxis Bighorn Radial Tires	823.00
		DRIVER SEAT	
2000		21 In. Standard XUV HB Seat - Yellow	In Base Price
2001		Bench Seat - Yellow	Same Price
2002		High Performance Sport Seat - Black	296.00
		DELUXE CARGO BOX	
3000		Deluxe Cargo Box with Paint, Brake, Tail & Reverse Lights	In Base Price
3002		Deluxe Cargo Box with Polyurea Liner, Brake, Tail, Reverse Lights & Light Protector	348.00
		OVERHEAD PROTECTION STRUCTURES (OPS)	
4000		OPS	In Base Price
4002		Deluxe Cab Frame/Including Windshield, Wiper, Electrical Kit and Rear Window	2,368.00
4008		OPS with Black Poly Roof	416.00
		POWER AND FRONT PROTECTION PACKAGE	
5000		Power and Front Protection Package Package Consists of: Power Lift, Heavy Duty Front Brushguard, Heavy Duty Front Fender Guard, Floor Mats *Package Priced at 10% discount.*	1,261.00
5010		Manual Lift *Must order 5010 option code when ordering 6000 option code.*	In Base Price
		REAR PROTECTION PACKAGE	
5100		Rear Protection Package Package Consists of: Rear Bumper, Bed Mat, Cargo Box Heavy Duty Fender Guards *Package Priced at 10% discount.*	494.00
5110		Less Rear Protection Package	In Base Price
		FRONT BRUSH GUARD	
6000		Heavy Duty Front Brushguard	233.00

XUV 825i Green & Yellow
Continued

CODE	ATTACHMENT IDENTIFIER	DESCRIPTION	SUGGESTED LIST PRICE USD ($)
		FRONT BRUSH GUARD Continued...	
6010		Less Front Brush Guard *Must order 6010 option code when ordering 5000 option code.*	In Base Price
		MUFFLER	
6100		Standard Muffler	In Base Price
6200		High Performance Slip-On Exhaust	430.00
		HOOD RACK	
6300		Front Hood Rack XUV *Must order 5000 or 6000 option code when ordering 6300 option code.*	226.00
6310		Less Front Hood Rack XUV *Must order 6310 option code when ordering 4002 option code.*	In Base Price
		Attachments-Order as Desired	
		Spanish North American Kit:	
9435		Spanish North American Operator's Manual and Decal Kit	No Charge
		ATTACHMENTS FOR FIELD CONVERSION	
		Blades:	
	LP25355	Heavy Duty POWERtach Blade - 72" *Available through Order Zone*	In Catalog
	LPPK140	POWERtach Deflector Shield *Available through Order Zone*	In Catalog
	LPPK120	POWERtach Markers *Available through Order Zone*	In Catalog
	LPPWBK72	POWERtach Poly Wear Bar *Available through Order Zone*	In Catalog
	LPPK150	POWERtach Rubber Squeegee *Available through Order Zone*	In Catalog
	LPPK160	POWERtach Skid Shoes *Available through Order Zone*	In Catalog
		Cabs/Roofs/Windshields:	
	BM23768	Air Cleaner Relocation Kit (Gas) *Quiet Cab Kit for Deluxe Cab. Requires Noise Reduction Kit. Can also be used with Poly Cab for noise reduction.*	11.77
	BM23608	Cab Heater *Requires Cab Heater Fitting Kit.*	1,130.99
	BM23509	Cab Heater Fitting Kit	112.36

XUV 825i Green & Yellow
Continued

CODE	ATTACHMENT IDENTIFIER	DESCRIPTION	SUGGESTED LIST PRICE USD ($)
		ATTACHMENTS FOR FIELD CONVERSION Continued...	
	BM23498	Deluxe Cab Frame *Requires Seat Belt Kit, Glass Door Kit, Glass Windshield with Wiper, and Rear Window Kit to complete full Deluxe Cab.*	1,443.43
	VGB10505	Electrical Kit *Required for field installed Deluxe cabs.*	94.16
	BM24560	Glass Door Kit - Deluxe Cab	2,427.83
	BM23507	Glass Windshield with Wiper - Deluxe Cab	874.19
	BM21656	Interior Light Kit - Deluxe Cab *Requires Electrical Kit.*	58.86
	BM23750	Noise Reduction Kit (Gas & Diesel) *Quiet Cab Kit for Deluxe Cab. Requires Air Cleaner Relocation Kit.*	373.43
	BM23742	OPS Full No-Scratch Windshield *Not compatible with Deluxe Cab Frame. Compatible with poly cab.*	531.79
	BM23741	OPS Full Poly Windshield *Not compatible with Deluxe Cab Frame. Compatible with poly cab.*	423.71
	BM23743	OPS Glass Windshield with Wiper *Not compatible with Deluxe Cab Frame. Compatible with poly cab.*	874.19
	BM23740	OPS Half Poly Windshield *Not compatible with Deluxe Cab Frame.*	339.19
	BM24115	OPS Poly Roof - Black	445.11
	BM24561	OPS Rear Panel *Part of the Poly cab, or can be mounted on the OPS alone. Requires full windshield, poly cab doors, and poly roof to complete poly cab.*	502.90
	LP10314	OPS Side Mirror - Left *Available through Order Zone.*	In Catalog
	LP10315	OPS Side Mirror - Right *Available through Order Zone.*	In Catalog
	LP93127	OPS Soft Roof - Black *Available through Order Zone*	In Catalog
	BM24117	Poly Cab Doors *Includes left and right doors, with side mirrors. Requires full windshield, OPS rear panel, and poly roof to complete poly cab.*	2,675.00
	BM23505	Rear Window Kit - Deluxe Cab	225.77
	BM23755	Seat Belt Kit *Required with Deluxe Cab Frame*	144.46
	BM23508	Side Mirrors - Deluxe Cab	129.47
	BM21646	Visor (1) Kit - Deluxe cab	70.61

XUV 825i Green & Yellow
Continued

CODE	ATTACHMENT IDENTIFIER	DESCRIPTION	SUGGESTED LIST PRICE USD ($)
		ATTACHMENTS FOR FIELD CONVERSION Continued...	
	BM23534	Windshield Washer Fluid Kit - Deluxe Cab *Requires Electrical Kit.*	173.34
		Cargo Box Options / Storage:	
	BM23849	5 Gallon Pail Holder	38.51
	BM22772	Cargo Box Bed Mat	119.84
	BM22769	Cargo Box Divider	191.53
	BM22811	Cargo Box FenderGuard *Requires Rear Bumper*	191.53
	BM23694	Cargo Box Power Lift Kit	858.14
	BM22774	Cargo Box Side Extension Kit	511.46
	LP19880	Deluxe Cargo Box Cover - Black *Available through Order Zone*	In Catalog
	BM22980	Front Hood Rack *Requires Front Brush Guard.*	241.81
	LP30320	Fuel Pack *Available through Order Zone*	In Catalog
	LP19878	Gator Gear Organizer - Black *Available through Order Zone*	In Catalog
	LP19886	Gator Tool Box *Contact Dealer for pricing.*	In Catalog
	LP93117	OPS Overhead Organizer - Black *Available through Order Zone*	In Catalog
	LP46485	Ratcheting Rhino Grip *Available through Order Zone.*	In Catalog
	LP25929	Rhino Grip XL - Double *Available through Order Zone.*	In Catalog
	LP25928	Rhino Grip XL - Single *Available through Order Zone.*	In Catalog
	LP19882	Saw Press Bracket *Available through Order Zone*	In Catalog
	BM22775	Side Tool Rack	304.96
	LP93207	Soft Rear Screen and Organizer - Black *Available through Order Zone*	In Catalog
		Carts / Hitches:	
	LPPCT10LXATV	10AT Cart *Available through Order Zone*	In Catalog
	LPPCT17ATJD	17AT Cart *Available through Order Zone.*	In Catalog

XUV 825i Green & Yellow
Continued

CODE	ATTACHMENT IDENTIFIER	DESCRIPTION	SUGGESTED LIST PRICE USD ($)
		ATTACHMENTS FOR FIELD CONVERSION Continued...	
	LPUT21JD	21 Steel Utility Cart *Available through Order Zone*	In Catalog
	PM05101	Ball Mount - 1.875 in. (48mm)	See Parts
	PM05201	Ball Mount - 2 in. (51mm)	See Parts
	BM22290	Drawbar - 2 in. (51mm)	38.51
		Custom & High Performance:	
	BM24021	Fox ® High Performance Racing Shox	1,758.01
	BM22916	High Performance Slip-On Exhaust	680.51
	BM22703	Seat-Belt Comfort Strap (2) *Also compatible with Deluxe Cab.*	77.04
	BM24453	Stereo Mounting Kit *Includes mounting kit only; must choose one of the following three head units to have complete stereo:* *Radio, Heavy Duty AM / FM / WB / AUX (SWJHD1120)* *Radio, Heavy Duty AM / FM / WB / SAT / I-POD (SWJHD1620)* *Radio, AM / FM / WB / CD / AUX / SAT Ready (SWJHD3620)* *Must order head unit through Parts. Stereo Mounting Kit not compatible with Deluxe Cab.*	521.09
		Hunting / Camo:	
	LP19884	Cargo Box Gun Mount - Black *Available through Order Zone*	In Catalog
	LP10319	Gun Mount Kit - Overhead *Includes 2 Gun Boot VI.* *Available through Order Zone*	In Catalog
	LP93103	Vehicle Cover, Cab / ROPS - Camo *Fits all Models Equipped with OPS and Deluxe Cab Structure.* *Available through Order Zone*	In Catalog
		Lights / Signals:	
	BM24726	Backup Alarm	74.56
	BM24013	Beacon Light *Requires OPS Poly Roof and OPS Switch Bank.*	219.36
	BM21649	Beacon Light Kit - Deluxe Cab *Requires Electrical Kit.*	371.29
	BM24587	Deluxe Signal Light Kit *Includes Turn Signals (Front & Rear) and 4-Way Flashers. Compatible with the 825i and 825i S4 vehicles equipped with the 3000 cargo box option code or 625i, 855D and 855D S4 vehicles equipped with the 3002 Cargo Box option code which already includes the brake & tail lights.*	171.20
	BM21651	Front Light Kit - Deluxe Cab *Requires Electrical Kit.*	293.19
	BM23442	Hella HID Sport Driving Lights *Requires OPS Switch Bank for OPS or poly roof mounting, or Front Brushguard for bumper mounting.*	935.19

XUV 825i Green & Yellow
Continued

CODE	ATTACHMENT IDENTIFIER	DESCRIPTION	SUGGESTED LIST PRICE USD ($)
		ATTACHMENTS FOR FIELD CONVERSION Continued...	
	BM24108	Hella Performance Spot Lights *Requires OPS Switch Bank for OPS or poly roof mounting, or Front Brushguard for bumper mounting.*	343.47
	BM23370	Horn Kit	97.37
	BM24090	Long Range Light Kit *Can also mount behind front bumper cover directly to frame.* *Requires OPS Switch Bank for OPS or poly roof mounting, or Front Brushguard for brushguard mounting.*	191.53
	BM24016	Mid-Range Light Kit *Requires OPS Switch Bank for OPS or poly roof mounting. Can be installed on the front or rear of OPS or roof.*	123.06
	BM24089	OPS Switch Bank *Accommodates up to three separate OPS accessory kits.*	67.41
	BM21652	Rear Light Kit - Deluxe Cab *Requires Electrical Kit.*	217.21
		Protection:	
	BM24282	Floormat *Also front floormat on S4*	78.11
	BM24463	Front CV Guards	114.49
	BM22987	Heavy Duty Fender Guard *Compatible with Standard Front Bumper.*	215.07
	BM22841	Heavy Duty Front Brush Guard	249.31
	BM22767	Heavy Duty Rear Bumper	236.47
	BM22962	Rear CV Guards	114.49
	BM22773	Tail Light Protectors	89.89
	LP93107	Vehicle Cover, Cab / ROPS - Black *Available through Order Zone.*	In Catalog
		Seats / Wheels / Tires:	
	LP40587	Camoplast Tracks (825i) *Available through Order Zone*	In Catalog
		Sprayers / Pressure Washers:	
	LP33597	25 Gallon Bed Sprayer *Available through Order Zone*	In Catalog
	LP19490	25 Gallon Portable Sprayer *Available through Order Zone*	In Catalog
	LP20852	45 Gallon Bed Sprayer *Available through Order Zone*	In Catalog
	LP22908	45 Gallon High Performance Sprayer *Available through Order Zone*	In Catalog

XUV 825i Green & Yellow
Continued

CODE	ATTACHMENT IDENTIFIER	DESCRIPTION	SUGGESTED LIST PRICE USD ($)
		ATTACHMENTS FOR FIELD CONVERSION Continued...	
	LP20485	45 Gallon Tow-Behind Sprayer *Available through Order Zone*	In Catalog
	LP20853	90 Gallon Bed Sprayer *Available through Order Zone*	In Catalog
	LP22909	90 Gallon High Performance Bed Sprayer *Available through Order Zone*	In Catalog
	LPGP2700GH	GatorPal High Pressure Washer (2700 psi, Honda engine) *Contact Dealer for pricing.*	In Catalog
	LPGP2700GS	GatorPal High Pressure Washer (2700 psi, Subaru engine) *Contact Dealer for pricing.*	In Catalog
	LPGP3000GH	GatorPal High Pressure Washer (3000 psi, Honda engine) *Contact Dealer for pricing.*	In Catalog
	LPGP3000GS	GatorPal High Pressure Washer (3000 psi, Subaru engine) *Contact Dealer for pricing.*	In Catalog
	LP22885	HP 150 in. Precision Boom *Compatible with all High Performance Sprayers* *Available through Order Zone*	In Catalog
	LP39963	HP 45 Gallon Sprayer - Tow Behind *Available through Order Zone*	In Catalog
	LP22884	HP Boomless Nozzles *Compatible with all High Performance Sprayers* *Available through Order Zone*	In Catalog
	LP22911	HP Standard Gator Boom *Compatible with all High Performance Sprayers* *Available through Order Zone*	In Catalog
		Winch:	
	BM24443	Warn® Winch (3000 lb) *Requires 2-Inch Receiver Multi-Mount Kit for Front or Rear Receiver Mount.*	770.40
	BM23105	Winch - 2 Inch Receiver Multi-Mount Kit	225.77
	BM21392	Winch Accessories Kit *Accessory kit includes 1/2" shackle, 9,000 lbs. maximum capacity snatch block, (2) 1"x8' tree trunk protectors, and (1) pair of WARN winching gloves.*	129.47
		SERVICE CONTRACTS - RESIDENTIAL OWNERS/USE	
		Visit http://www.JohnDeere.com/ServicePlans for more information on John Deere Service Contracts. May not be Available in Parts of the U.S., Not Available in Canada. Price may vary due to driving distance and/or time from machine to dealership location.	
		John Deere Extended Service Plan - 2-Year Option *Available for T-Series, HPX and XUV utility vehicles only.)* *2-year extended service plan. (1 year of extended service protection);* *2-years of warranty transportation.*	399.99
		John Deere Extended Service Plan - 3-Year Option	569.99

XUV 825i Green & Yellow

Continued

CODE	ATTACHMENT IDENTIFIER	DESCRIPTION	SUGGESTED LIST PRICE USD ($)
		SERVICE CONTRACTS - RESIDENTIAL OWNERS/USE	
		Continued...	
		3-year extended service plan. (2 years of extended service protection);	
		3-years of warranty transportation.	

XUV 825i Power Steering Green & Yellow

Equipment for Base Machine

ENGINE:
50 Engine HP*(812cc),
Electronic Fuel Injection
(EFI)
Three Cylinder, Liquid-cooled,
Dual Overhead Cams,
4-Cycle Gasoline
Full Pressure Lubrication
System
Replaceable Single Dry-Type
Element Air Cleaner with
Remote Intake
7.0 Gallon (26.49L) Fuel
Capacity
Solid-state Ignition (12V)
Spark-arresting Muffler
ELECTRICAL:
Electric Start
75 Amp Alternator
340 CCA Battery
Two 37.5 Watt Halogen
Headlights
Brake and Tail Lights
TRANSAXLE/TRANSMISSION:
Continuously Variable
Transmission
Full Clutch Enclosure
Two-speed Transaxle
Operator Selectable 4WD
44 mph (70 kph) Maximum
Forward Speed
On-demand True Four-Wheel
Drive System
Auto Locking Front Differential
Traction Assist
Front and Rear Hydraulic Disk
Brakes
Hand-operated Sealed Wet Disk
Park brake
1.3 In. (27mm) Forged Rear
Axles
STEERING/SUSPENSION:
Power Steering
Rack and Pinion Steering
Independent Front Suspension
(IRS) with 8 inches (203mm)
of travel
Independent Rear Suspension
(IRS) with 9 inches (228.6mm)
of travel
Integrated 2" Rear Receiver
12.4 ft. Turning Radius
Ground Clearance: 11 In.
(267 mm)
Ground Clearance
(Under Foot Platform):
12.25 In (311 mm)
FRAME/STYLED PARTS:
Hydroform Technology Frame
PC/ASA (JDLOY) Hood and
Fenders
OCCUPANT PROTECTION SYSTEM(OPS):
1.75 In. (44.4 mm) Steel Tubular
Overhead Structure
Multiple Passenger Handholds
3-pt. Seat Belts
SAE J2194 & OSHA ROPS Certified
OPERATOR STATION:
High-back Bucket Seats
7 In. (178 mm) Slide Rail
Adjustment on Driver's Seat
Hip Restraint Bars for Driver
and Passenger
Passenger Grab Handles
Glove Box
Storage Compartment Under Hood
Two Cup Holders
Instrument gauge with 4
wheel-drive indicator, RPM,
MPH/KPH, time of day, fuel
level, total miles and hour
meters
12v DC Outlet
FRONTAL PROTECTION:
Heavy-Duty Front Bumper
Integrated 2 Inch Front Receiver
Hitch
REAR PROTECTION:
Skid Plate and Close Out Panel
DIMENSIONS(WITH OPS):
116 In. Long x 62 In.
Wide x 75 Inches High
PAYLOAD CAPACITY:
1,400 Lb (635 kg) Total Payload
Capacity which Includes:
200 Lb (91 kg) Driver,
200 Lb (91 kg) Passenger, and
1000 Lb (454 kg) in Cargo Box
Towing Capacity:
1,500 Lb (680kg)
CARGO BOX:
45 In. Long x 52 In. Wide x
12 In. Deep
(1,143mm x 1321mm x 305mm)
16.4cu. ft (.46 cu.m) Capacity
1000 Lbs (454 kg) Box Capacity
Tilting Box
Hinged (Bottom) Tailgate
Load Guard
TIRES:
Front: 26x9-12 Ancla XT
(Extreme Terrain Tires)
Rear: 26x11-12 Ancla XT
(Extreme Terrain Tires)
SAFETY VIDEO TAPE:
Safety and Operational DVD
Operators Manual
*Engine HP is Provided by the
Engine Manufacturer to be Used
for Comparison Purposes Only,
Actual Operating HP will be
Less.

CODE	ATTACHMENT IDENTIFIER	DESCRIPTION	SUGGESTED LIST PRICE USD ($)

Select One Code From Each Required Category

BASE MACHINE

F.O.B. Janesville, Wisconsin

397JM	XUV 825i Power Steering Green & Yellow *Base Machine Suggested List Price Does Not Include $400 USD Destination Charge.*	12,799.00

DESTINATION

0202	US/Canada	In Base Price
0230	Australia/New Zealand	Same Price
0195	Mexico	Same Price

XUV 825i Power Steering Green & Yellow
Continued

CODE	ATTACHMENT IDENTIFIER	DESCRIPTION	SUGGESTED LIST PRICE USD ($)
		DESTINATION Continued...	
0250		All Other Countries	Same Price
0179		Europe	312.00
		WHEELS WITH TIRES (FOUR)	
1000		Yellow Steel Wheels Terra Hawk All Terrain Tires	Same Price
1001		Yellow Steel Wheels Ancla M-T Extreme Terrain Tire	In Base Price
1002		Yellow Alloy Wheels Maxxis Bighorn Radial Tires	823.00
		DRIVER SEAT	
2000		21 In. Standard XUV HB Seat - Yellow	In Base Price
2001		Bench Seat - Yellow	Same Price
2002		High Performance Sport Seat - Black	296.00
		DELUXE CARGO BOX	
3000		Deluxe Cargo Box with Paint, Brake, Tail & Reverse Lights	In Base Price
3002		Deluxe Cargo Box with Polyurea Liner, Brake, Tail, Reverse Lights & Light Protector	348.00
		OVERHEAD PROTECTION STRUCTURES (OPS)	
4000		OPS	In Base Price
4002		Deluxe Cab Frame/Including Windshield, Wiper, Electrical Kit and Rear Window	2,368.00
4008		OPS with Black Poly Roof	416.00
		POWER AND FRONT PROTECTION PACKAGE	
5000		Power and Front Protection Package Package Consists of: Power Lift, Heavy Duty Front Brushguard, Heavy Duty Front Fender Guard, Floor Mats *Package Priced at 10% discount.*	1,261.00
5010		Manual Lift *Must order 5010 option code when ordering 6000 option code.*	In Base Price
		REAR PROTECTION PACKAGE	
5100		Rear Protection Package Package Consists of: Rear Bumper, Bed Mat, Cargo Box Heavy Duty Fender Guards *Package Priced at 10% discount.*	494.00
5110		Less Rear Protection Package	In Base Price
		FRONT BRUSH GUARD	
6000		Heavy Duty Front Brushguard	233.00
6010		Less Front Brush Guard	In Base Price

XUV 825i Power Steering Green & Yellow
Continued

CODE	ATTACHMENT IDENTIFIER	DESCRIPTION	SUGGESTED LIST PRICE USD ($)
		FRONT BRUSH GUARD Continued... *Must order 6010 option code when ordering 5000 option code.*	
		MUFFLER	
6100		Standard Muffler	In Base Price
6200		High Performance Slip-On Exhaust	430.00
		HOOD RACK	
6300		Front Hood Rack XUV *Must order 5000 or 6000 option code when ordering 6300 option code.*	226.00
6310		Less Front Hood Rack XUV *Must order 6310 option code when ordering 4002 option code.*	In Base Price
		Attachments-Order as Desired	
		Spanish North American Kit:	
9435		Spanish North American Operator's Manual and Decal Kit	No Charge
		ATTACHMENTS FOR FIELD CONVERSION	
		Blades:	
	LP25355	Heavy Duty POWERtach Blade - 72" *Available through Order Zone*	In Catalog
	LPPK140	POWERtach Deflector Shield *Available through Order Zone*	In Catalog
	LPPK120	POWERtach Markers *Available through Order Zone*	In Catalog
	LPPWBK72	POWERtach Poly Wear Bar *Available through Order Zone*	In Catalog
	LPPK150	POWERtach Rubber Squeegee *Available through Order Zone*	In Catalog
	LPPK160	POWERtach Skid Shoes *Available through Order Zone*	In Catalog
		Cabs/Roofs/Windshields:	
	BM23768	Air Cleaner Relocation Kit (Gas) *Quiet Cab Kit for Deluxe Cab. Requires Noise Reduction Kit. Can also be used with Poly Cab for noise reduction.*	11.77
	BM23608	Cab Heater *Requires Cab Heater Fitting Kit.*	1,130.99
	BM23509	Cab Heater Fitting Kit	112.36
	BM23498	Deluxe Cab Frame *Requires Seat Belt Kit, Glass Door Kit, Glass Windshield with Wiper, and Rear Window Kit to complete full Deluxe Cab.*	1,443.43

XUV 825i Power Steering Green & Yellow
Continued

CODE	ATTACHMENT IDENTIFIER	DESCRIPTION	SUGGESTED LIST PRICE USD ($)
		ATTACHMENTS FOR FIELD CONVERSION Continued...	
	VGB10505	Electrical Kit *Required for field installed Deluxe cabs.*	94.16
	BM24560	Glass Door Kit - Deluxe Cab	2,427.83
	BM23507	Glass Windshield with Wiper - Deluxe Cab	874.19
	BM21656	Interior Light Kit - Deluxe Cab *Requires Electrical Kit.*	58.86
	BM23750	Noise Reduction Kit (Gas & Diesel) *Quiet Cab Kit for Deluxe Cab. Requires Air Cleaner Relocation Kit.*	373.43
	BM23742	OPS Full No-Scratch Windshield *Not compatible with Deluxe Cab Frame. Compatible with poly cab.*	531.79
	BM23741	OPS Full Poly Windshield *Not compatible with Deluxe Cab Frame. Compatible with poly cab.*	423.71
	BM23743	OPS Glass Windshield with Wiper *Not compatible with Deluxe Cab Frame. Compatible with poly cab.*	874.19
	BM23740	OPS Half Poly Windshield *Not compatible with Deluxe Cab Frame.*	339.19
	BM24115	OPS Poly Roof - Black	445.11
	BM24561	OPS Rear Panel *Part of the Poly cab, or can be mounted on the OPS alone. Requires full windshield, poly cab doors, and poly roof to complete poly cab.*	502.90
	LP10314	OPS Side Mirror - Left *Available through Order Zone.*	In Catalog
	LP10315	OPS Side Mirror - Right *Available through Order Zone.*	In Catalog
	LP93127	OPS Soft Roof - Black *Available through Order Zone*	In Catalog
	BM24117	Poly Cab Doors *Includes left and right doors, with side mirrors. Requires full windshield, OPS rear panel, and poly roof to complete poly cab.*	2,675.00
	BM23505	Rear Window Kit - Deluxe Cab	225.77
	BM23755	Seat Belt Kit *Required with Deluxe Cab Frame*	144.46
	BM23508	Side Mirrors - Deluxe Cab	129.47
	BM21646	Visor (1) Kit - Deluxe cab	70.61
	BM23534	Windshield Washer Fluid Kit - Deluxe Cab *Requires Electrical Kit.*	173.34
		Cargo Box Options / Storage:	
	BM23849	5 Gallon Pail Holder	38.51

XUV 825i Power Steering Green & Yellow
Continued

CODE	ATTACHMENT IDENTIFIER	DESCRIPTION	SUGGESTED LIST PRICE USD ($)
		ATTACHMENTS FOR FIELD CONVERSION Continued...	
	BM22772	Cargo Box Bed Mat	119.84
	BM22769	Cargo Box Divider	191.53
	BM22811	Cargo Box FenderGuard *Requires Rear Bumper*	191.53
	BM23694	Cargo Box Power Lift Kit	858.14
	BM22774	Cargo Box Side Extension Kit	511.46
	LP19880	Deluxe Cargo Box Cover - Black *Available through Order Zone*	In Catalog
	BM22980	Front Hood Rack *Requires Front Brush Guard.*	241.81
	LP30320	Fuel Pack *Available through Order Zone*	In Catalog
	LP19878	Gator Gear Organizer - Black *Available through Order Zone*	In Catalog
	LP19886	Gator Tool Box *Contact Dealer for pricing.*	In Catalog
	LP93117	OPS Overhead Organizer - Black *Available through Order Zone*	In Catalog
	LP46485	Ratcheting Rhino Grip *Available through Order Zone.*	In Catalog
	LP25929	Rhino Grip XL - Double *Available through Order Zone.*	In Catalog
	LP25928	Rhino Grip XL - Single *Available through Order Zone.*	In Catalog
	LP19882	Saw Press Bracket *Available through Order Zone*	In Catalog
	BM22775	Side Tool Rack	304.96
	LP93207	Soft Rear Screen and Organizer - Black *Available through Order Zone*	In Catalog
		Carts / Hitches:	
	LPPCT10LXATV	10AT Cart *Available through Order Zone*	In Catalog
	LPPCT17ATJD	17AT Cart *Available through Order Zone.*	In Catalog
	LPUT21JD	21 Steel Utility Cart *Available through Order Zone*	In Catalog
	PM05101	Ball Mount - 1.875 in. (48mm)	See Parts

XUV 825i Power Steering Green & Yellow
Continued

CODE	ATTACHMENT IDENTIFIER	DESCRIPTION	SUGGESTED LIST PRICE USD ($)
		ATTACHMENTS FOR FIELD CONVERSION Continued...	
	PM05201	Ball Mount - 2 in. (51mm)	See Parts
	BM22290	Drawbar - 2 in. (51mm)	38.51
		Custom & High Performance:	
	BM24021	Fox ® High Performance Racing Shox	1,758.01
	BM22916	High Performance Slip-On Exhaust	680.51
	BM22703	Seat-Belt Comfort Strap (2) *Also compatible with Deluxe Cab.*	77.04
	BM24453	Stereo Mounting Kit *Includes mounting kit only; must choose one of the following three head units to have complete stereo:* *Radio, Heavy Duty AM / FM / WB / AUX (SWJHD1120)* *Radio, Heavy Duty AM / FM / WB / SAT / I-POD (SWJHD1620)* *Radio, AM / FM / WB / CD / AUX / SAT Ready (SWJHD3620)* *Must order head unit through Parts. Stereo Mounting Kit not compatible with Deluxe Cab.*	521.09
		Hunting / Camo:	
	LP19884	Cargo Box Gun Mount - Black *Available through Order Zone*	In Catalog
	LP10319	Gun Mount Kit - Overhead *Includes 2 Gun Boot VI.* *Available through Order Zone*	In Catalog
	LP93103	Vehicle Cover, Cab / ROPS - Camo *Fits all Models Equipped with OPS and Deluxe Cab Structure.* *Available through Order Zone*	In Catalog
		Lights / Signals:	
	BM24726	Backup Alarm	74.56
	BM24013	Beacon Light *Requires OPS Poly Roof and OPS Switch Bank.*	219.36
	BM21649	Beacon Light Kit - Deluxe Cab *Requires Electrical Kit.*	371.29
	BM24587	Deluxe Signal Light Kit *Includes Turn Signals (Front & Rear) and 4-Way Flashers. Compatible with the 825i and 825i S4 vehicles equipped with the 3000 cargo box option code or 625i, 855D and 855D S4 vehicles equipped with the 3002 Cargo Box option code which already includes the brake & tail lights.*	171.20
	BM21651	Front Light Kit - Deluxe Cab *Requires Electrical Kit.*	293.19
	BM23442	Hella HID Sport Driving Lights *Requires OPS Switch Bank for OPS or poly roof mounting, or Front Brushguard for bumper mounting.*	935.19
	BM24108	Hella Performance Spot Lights *Requires OPS Switch Bank for OPS or poly roof mounting, or Front Brushguard for bumper mounting.*	343.47
	BM23370	Horn Kit	97.37

XUV 825i Power Steering Green & Yellow
Continued

CODE	ATTACHMENT IDENTIFIER	DESCRIPTION	SUGGESTED LIST PRICE USD ($)
		ATTACHMENTS FOR FIELD CONVERSION Continued...	
	BM24090	Long Range Light Kit *Can also mount behind front bumper cover directly to frame.* *Requires OPS Switch Bank for OPS or poly roof mounting, or Front Brushguard for brushguard mounting.*	191.53
	BM24016	Mid-Range Light Kit *Requires OPS Switch Bank for OPS or poly roof mounting. Can be installed on the front or rear of OPS or roof.*	123.06
	BM24089	OPS Switch Bank *Accommodates up to three separate OPS accessory kits.*	67.41
	BM21652	Rear Light Kit - Deluxe Cab *Requires Electrical Kit.*	217.21
		Protection:	
	BM24282	Floormat *Also front floormat on S4*	78.11
	BM24463	Front CV Guards	114.49
	BM22987	Heavy Duty Fender Guard *Compatible with Standard Front Bumper.*	215.07
	BM22841	Heavy Duty Front Brush Guard	249.31
	BM22767	Heavy Duty Rear Bumper	236.47
	BM22962	Rear CV Guards	114.49
	BM22773	Tail Light Protectors	89.89
	LP93107	Vehicle Cover, Cab / ROPS - Black *Available through Order Zone.*	In Catalog
		Seats / Wheels / Tires:	
	LP40587	Camoplast Tracks (825i) *Available through Order Zone*	In Catalog
		Sprayers / Pressure Washers:	
	LP33597	25 Gallon Bed Sprayer *Available through Order Zone*	In Catalog
	LP19490	25 Gallon Portable Sprayer *Available through Order Zone*	In Catalog
	LP20852	45 Gallon Bed Sprayer *Available through Order Zone*	In Catalog
	LP22908	45 Gallon High Performance Sprayer *Available through Order Zone*	In Catalog
	LP20485	45 Gallon Tow-Behind Sprayer *Available through Order Zone*	In Catalog
	LP20853	90 Gallon Bed Sprayer *Available through Order Zone*	In Catalog

XUV 825i Power Steering Green & Yellow
Continued

CODE	ATTACHMENT IDENTIFIER	DESCRIPTION	SUGGESTED LIST PRICE USD ($)
		ATTACHMENTS FOR FIELD CONVERSION Continued...	
	LP22909	90 Gallon High Performance Bed Sprayer *Available through Order Zone*	In Catalog
	LPGP2700GH	GatorPal High Pressure Washer (2700 psi, Honda engine) *Contact Dealer for pricing.*	In Catalog
	LPGP2700GS	GatorPal High Pressure Washer (2700 psi, Subaru engine) *Contact Dealer for pricing.*	In Catalog
	LPGP3000GH	GatorPal High Pressure Washer (3000 psi, Honda engine) *Contact Dealer for pricing.*	In Catalog
	LPGP3000GS	GatorPal High Pressure Washer (3000 psi, Subaru engine) *Contact Dealer for pricing.*	In Catalog
	LP22885	HP 150 in. Precision Boom *Compatible with all High Performance Sprayers* *Available through Order Zone*	In Catalog
	LP39963	HP 45 Gallon Sprayer - Tow Behind *Available through Order Zone*	In Catalog
	LP22884	HP Boomless Nozzles *Compatible with all High Performance Sprayers* *Available through Order Zone*	In Catalog
	LP22911	HP Standard Gator Boom *Compatible with all High Performance Sprayers* *Available through Order Zone*	In Catalog
		Winch:	
	BM24443	Warn® Winch (3000 lb) *Requires 2-Inch Receiver Multi-Mount Kit for Front or Rear Receiver Mount.*	770.40
	BM23105	Winch - 2 Inch Receiver Multi-Mount Kit	225.77
	BM21392	Winch Accessories Kit *Accessory kit includes 1/2" shackle, 9,000 lbs. maximum capacity snatch block, (2) 1"x8' tree trunk protectors, and (1) pair of WARN winching gloves.*	129.47
		SERVICE CONTRACTS - RESIDENTIAL OWNERS/USE	
		Visit http://www.JohnDeere.com/ServicePlans for more information on John Deere Service Contracts. May not be Available in Parts of the U.S., Not Available in Canada. Price may vary due to driving distance and/or time from machine to dealership location.	
		John Deere Extended Service Plan - 2-Year Option *Available for T-Series, HPX and XUV utility vehicles only.)* *2-year extended service plan. (1 year of extended service protection);* *2-years of warranty transportation.*	399.99
		John Deere Extended Service Plan - 3-Year Option *3-year extended service plan. (2 years of extended service protection);* *3-years of warranty transportation.*	569.99

XUV 825i Olive & Black

Equipment for Base Machine

ENGINE:
50 Engine HP*(812cc),
Electronic Fuel Injection (EFI)
Three Cylinder, Liquid-cooled, Dual Overhead Cams, 4-Cycle Gasoline
Full Pressure Lubrication System
Replaceable Single Dry-Type Element Air Cleaner with Remote Intake
7.0 Gallon (26.49L) Fuel Capacity
Solid-state Ignition (12V)
Spark-arresting Muffler
ELECTRICAL:
Electric Start
75 Amp Alternator
340 CCA Battery
Two 37.5 Watt Halogen Headlights
Brake and Tail Lights
TRANSAXLE/TRANSMISSION:
Continuously Variable Transmission
Full Clutch Enclosure
Two-speed Transaxle
Operator Selectable 4WD
44 mph (70 kph) Maximum Forward Speed
On-demand True Four-Wheel Drive System
Auto Locking Front Differential Traction Assist
Front and Rear Hydraulic Disk Brakes
Hand-operated Sealed Wet Disk Park brake
1.3 In. (27mm) Forged Rear Axles
STEERING/SUSPENSION:
Rack and Pinion Steering
Independent Front Suspension (IRS) with 8 inches (203mm) of travel
Independent Rear Suspension (IRS) with 9 inches (228.6mm) of travel
Integrated 2" Rear Receiver
12.4 ft. Turning Radius
Ground Clearance: 11 In. (267 mm)
Ground Clearance (Under Foot Platform): 12.25 In (311 mm)
FRAME/STYLED PARTS:
Hydroform Technology Frame
PC/ASA (JDLOY) Hood and Fenders
OCCUPANT PROTECTION SYSTEM(OPS):
1.75 In. (44.4 mm) Steel Tubular Overhead Structure
Multiple Passenger Handholds
3-pt. Seat Belts
SAE J2194 & OSHA ROPS Certified
OPERATOR STATION:
High-back Bucket Seats
7 In. (178 mm) Slide Rail Adjustment on Driver's Seat
Hip Restraint Bars for Driver and Passenger
Passenger Grab Handles
Glove Box
Storage Compartment Under Hood
Two Cup Holders
Instrument gauge with 4 wheel-drive indicator, RPM, MPH/KPH, time of day, fuel level, total miles and hour meters
12v DC Outlet
Digital Instrument Cluster with (Speed MPH, KH/h, RPM, Hour meter, Odometer with trip, Clock, Water Temp.4WD notice)
FRONTAL PROTECTION:
Heavy-Duty Front Bumper
Integrated 2 Inch Front Receiver Hitch
REAR PROTECTION:
Skid Plate and Close Out Panel
DIMENSIONS(WITH OPS):
119 In. Long x 62 In. Wide x 75 Inches High
PAYLOAD CAPACITY:
1,400 Lb (635 kg) Total Payload Capacity which Includes:
200 Lb (91 kg) Driver,
200 Lb (91 kg) Passenger, and 1000 Lb (454 kg) in Cargo Box
Towing Capacity:
1,500 Lb (680kg)
CARGO BOX:
45 In. Long x 52 In. Wide x 12 In. Deep (1,143mm x 1321mm x 305mm)
16.4cu. ft (.46 cu.m) Capacity
1000 Lbs (454 kg) Box Capacity
Tilting Box
Hinged (Bottom) Tailgate
Load Guard
TIRES:
Front: 26x9-12 Ancla XT (Extreme Terrain Tires)
Rear: 26x11-12 Ancla XT (Extreme Terrain Tires)
SAFETY VIDEO TAPE:
Safety and Operational DVD
Operators Manual
*Engine HP is Provided by the Engine Manufacturer to be Used for Comparison Purposes Only, Actual Operating HP will be Less.

CODE	ATTACHMENT IDENTIFIER	DESCRIPTION	SUGGESTED LIST PRICE USD ($)

Select One Code From Each Required Category

BASE MACHINE

F.O.B. Janesville, Wisconsin

397GM	XUV 825i Olive & Black *Base Machine Suggested List Price Does Not Include $400 USD Destination Charge.*	11,899.00

DESTINATION

0202	US/Canada	In Base Price
0230	Australia/New Zealand	Same Price

XUV 825i Olive & Black
Continued

CODE	ATTACHMENT IDENTIFIER	DESCRIPTION	SUGGESTED LIST PRICE USD ($)
		DESTINATION Continued...	
0195		Mexico	Same Price
0250		All Other Countries	Same Price
0179		Europe	312.00
		WHEELS WITH TIRES (FOUR)	
1000		Black Steel Wheels Terra Hawk All Terrain Tires	Same Price
1001		Black Steel Wheels Ancla M-T Extreme Terrain Tire	In Base Price
1002		Black Alloy Wheels Maxxis Bighorn Radial Tires	823.00
1003		Silver Alloy Wheels Maxxis Bighorn Radial Tires	823.00
		DRIVER SEAT	
2000		21 In. Standard XUV HB Seat - Black	In Base Price
2001		Bench Seat - Black	Same Price
2002		High Performance Sport Seat - Black	296.00
		DELUXE CARGO BOX	
3000		Deluxe Cargo Box with Paint, Brake, Tail & Reverse Lights	In Base Price
3002		Deluxe Cargo Box with Polyurea Liner, Brake, Tail, Reverse Lights & Light Protector	348.00
		OVERHEAD PROTECTION STRUCTURES (OPS)	
4000		OPS	In Base Price
4002		Deluxe Cab Frame/Including Windshield, Wiper, Electrical Kit and Rear Window	2,368.00
4008		OPS with Black Poly Roof	416.00
		POWER AND FRONT PROTECTION PACKAGE	
5000		Power and Front Protection Package Package Consists of: Power Lift, Heavy Duty Front Brushguard, Heavy Duty Front Fender Guard, Floor Mats *Package Priced at 10% discount.*	1,261.00
5010		Manual Lift *Must order 5010 option code when ordering 6000 option code.*	In Base Price
		REAR PROTECTION PACKAGE	
5100		Rear Protection Package Package Consists of: Rear Bumper, Bed Mat, Cargo Box Heavy Duty Fender Guards *Package Priced at 10% discount.*	494.00
5110		Less Rear Protection Package	In Base Price
		FRONT BRUSH GUARD	

XUV 825i Olive & Black
Continued

CODE	ATTACHMENT IDENTIFIER	DESCRIPTION	SUGGESTED LIST PRICE USD ($)
		FRONT BRUSH GUARD Continued...	
6000		Heavy Duty Front Brushguard	233.00
6010		Less Front Brush Guard *Must order 6010 option code when ordering 5000 option code.*	In Base Price
		MUFFLER	
6100		Standard Muffler	In Base Price
6200		High Performance Slip-On Exhaust	430.00
		HOOD RACK	
6300		Front Hood Rack XUV *Must order 5000 or 6000 option code when ordering 6300 option code.*	226.00
6310		Less Front Hood Rack XUV *Must order 6310 option code when ordering 4002 option code.*	In Base Price
		Attachments-Order as Desired	
		Spanish North American Kit:	
9435		Spanish North American Operator's Manual and Decal Kit	No Charge
		ATTACHMENTS FOR FIELD CONVERSION	
		Blades:	
	LP25355	Heavy Duty POWERtach Blade - 72" *Available through Order Zone*	In Catalog
	LPPK140	POWERtach Deflector Shield *Available through Order Zone*	In Catalog
	LPPK120	POWERtach Markers *Available through Order Zone*	In Catalog
	LPPWBK72	POWERtach Poly Wear Bar *Available through Order Zone*	In Catalog
	LPPK150	POWERtach Rubber Squeegee *Available through Order Zone*	In Catalog
	LPPK160	POWERtach Skid Shoes *Available through Order Zone*	In Catalog
		Cabs/Roofs/Windshields:	
	BM23768	Air Cleaner Relocation Kit (Gas) *Quiet Cab Kit for Deluxe Cab. Requires Noise Reduction Kit. Can also be used with Poly Cab for noise reduction.*	11.77
	BM23608	Cab Heater *Requires Cab Heater Fitting Kit.*	1,130.99
	BM23509	Cab Heater Fitting Kit	112.36

XUV 825i Olive & Black
Continued

CODE	ATTACHMENT IDENTIFIER	DESCRIPTION	SUGGESTED LIST PRICE USD ($)
		ATTACHMENTS FOR FIELD CONVERSION Continued...	
	BM23498	Deluxe Cab Frame *Requires Seat Belt Kit, Glass Door Kit, Glass Windshield with Wiper, and Rear Window Kit to complete full Deluxe Cab.*	1,443.43
	VGB10505	Electrical Kit *Required for field installed Deluxe cabs.*	94.16
	BM24560	Glass Door Kit - Deluxe Cab	2,427.83
	BM23507	Glass Windshield with Wiper - Deluxe Cab	874.19
	BM21656	Interior Light Kit - Deluxe Cab *Requires Electrical Kit.*	58.86
	BM23750	Noise Reduction Kit (Gas & Diesel) *Quiet Cab Kit for Deluxe Cab. Requires Air Cleaner Relocation Kit.*	373.43
	BM23742	OPS Full No-Scratch Windshield *Not compatible with Deluxe Cab Frame. Compatible with poly cab.*	531.79
	BM23741	OPS Full Poly Windshield *Not compatible with Deluxe Cab Frame. Compatible with poly cab.*	423.71
	BM23743	OPS Glass Windshield with Wiper *Not compatible with Deluxe Cab Frame. Compatible with poly cab.*	874.19
	BM23740	OPS Half Poly Windshield *Not compatible with Deluxe Cab Frame.*	339.19
	BM24115	OPS Poly Roof - Black	445.11
	BM24561	OPS Rear Panel *Part of the Poly cab, or can be mounted on the OPS alone. Requires full windshield, poly cab doors, and poly roof to complete poly cab.*	502.90
	LP10314	OPS Side Mirror - Left *Available through Order Zone.*	In Catalog
	LP10315	OPS Side Mirror - Right *Available through Order Zone.*	In Catalog
	LP93127	OPS Soft Roof - Black *Available through Order Zone*	In Catalog
	BM24117	Poly Cab Doors *Includes left and right doors, with side mirrors. Requires full windshield, OPS rear panel, and poly roof to complete poly cab.*	2,675.00
	BM23505	Rear Window Kit - Deluxe Cab	225.77
	BM23755	Seat Belt Kit *Required with Deluxe Cab Frame*	144.46
	BM23508	Side Mirrors - Deluxe Cab	129.47
	BM21646	Visor (1) Kit - Deluxe cab	70.61

XUV 825i Olive & Black
Continued

CODE	ATTACHMENT IDENTIFIER	DESCRIPTION	SUGGESTED LIST PRICE USD ($)
		ATTACHMENTS FOR FIELD CONVERSION Continued...	
	BM23534	Windshield Washer Fluid Kit - Deluxe Cab *Requires Electrical Kit.*	173.34
		Cargo Box Options / Storage:	
	BM23849	5 Gallon Pail Holder	38.51
	BM22772	Cargo Box Bed Mat	119.84
	BM22769	Cargo Box Divider	191.53
	BM22811	Cargo Box FenderGuard *Requires Rear Bumper*	191.53
	BM23694	Cargo Box Power Lift Kit	858.14
	BM22774	Cargo Box Side Extension Kit	511.46
	LP19880	Deluxe Cargo Box Cover - Black *Available through Order Zone*	In Catalog
	BM22980	Front Hood Rack *Requires Front Brush Guard.*	241.81
	LP30320	Fuel Pack *Available through Order Zone*	In Catalog
	LP19878	Gator Gear Organizer - Black *Available through Order Zone*	In Catalog
	LP19886	Gator Tool Box *Contact Dealer for pricing.*	In Catalog
	LP93117	OPS Overhead Organizer - Black *Available through Order Zone*	In Catalog
	LP46485	Ratcheting Rhino Grip *Available through Order Zone.*	In Catalog
	LP25929	Rhino Grip XL - Double *Available through Order Zone.*	In Catalog
	LP25928	Rhino Grip XL - Single *Available through Order Zone.*	In Catalog
	LP19882	Saw Press Bracket *Available through Order Zone*	In Catalog
	BM22775	Side Tool Rack	304.96
	LP93207	Soft Rear Screen and Organizer - Black *Available through Order Zone*	In Catalog
		Carts / Hitches:	
	LPPCT10LXATV	10AT Cart *Available through Order Zone*	In Catalog
	LPPCT17ATJD	17AT Cart *Available through Order Zone.*	In Catalog

XUV 825i Olive & Black
Continued

CODE	ATTACHMENT IDENTIFIER	DESCRIPTION	SUGGESTED LIST PRICE USD ($)
		ATTACHMENTS FOR FIELD CONVERSION Continued...	
	LPUT21JD	21 Steel Utility Cart *Available through Order Zone*	In Catalog
	PM05101	Ball Mount - 1.875 in. (48mm)	See Parts
	PM05201	Ball Mount - 2 in. (51mm)	See Parts
	BM22290	Drawbar - 2 in. (51mm)	38.51
		Custom & High Performance:	
	BM24021	Fox ® High Performance Racing Shox	1,758.01
	BM22916	High Performance Slip-On Exhaust	680.51
	BM22703	Seat-Belt Comfort Strap (2) *Also compatible with Deluxe Cab.*	77.04
	BM24453	Stereo Mounting Kit *Includes mounting kit only; must choose one of the following three head units to have complete stereo:* *Radio, Heavy Duty AM / FM / WB / AUX (SWJHD1120)* *Radio, Heavy Duty AM / FM / WB / SAT / I-POD (SWJHD1620)* *Radio, AM / FM / WB / CD / AUX / SAT Ready (SWJHD3620)* *Must order head unit through Parts. Stereo Mounting Kit not compatible with Deluxe Cab.*	521.09
		Hunting / Camo:	
	LP19884	Cargo Box Gun Mount - Black *Available through Order Zone*	In Catalog
	LP10319	Gun Mount Kit - Overhead *Includes 2 Gun Boot VI.* *Available through Order Zone*	In Catalog
	LP93103	Vehicle Cover, Cab / ROPS - Camo *Fits all Models Equipped with OPS and Deluxe Cab Structure.* *Available through Order Zone*	In Catalog
		Lights / Signals:	
	BM24726	Backup Alarm	74.56
	BM24013	Beacon Light *Requires OPS Poly Roof and OPS Switch Bank.*	219.36
	BM21649	Beacon Light Kit - Deluxe Cab *Requires Electrical Kit.*	371.29
	BM24587	Deluxe Signal Light Kit *Includes Turn Signals (Front & Rear) and 4-Way Flashers. Compatible with the 825i and 825i S4 vehicles equipped with the 3000 cargo box option code or 625i, 855D and 855D S4 vehicles equipped with the 3002 Cargo Box option code which already includes the brake & tail lights.*	171.20
	BM21651	Front Light Kit - Deluxe Cab *Requires Electrical Kit.*	293.19
	BM23442	Hella HID Sport Driving Lights *Requires OPS Switch Bank for OPS or poly roof mounting, or Front Brushguard for bumper mounting.*	935.19

XUV 825i Olive & Black
Continued

CODE	ATTACHMENT IDENTIFIER	DESCRIPTION	SUGGESTED LIST PRICE USD ($)
		ATTACHMENTS FOR FIELD CONVERSION Continued...	
	BM24108	Hella Performance Spot Lights *Requires OPS Switch Bank for OPS or poly roof mounting, or Front Brushguard for bumper mounting.*	343.47
	BM23370	Horn Kit	97.37
	BM24090	Long Range Light Kit *Can also mount behind front bumper cover directly to frame.* *Requires OPS Switch Bank for OPS or poly roof mounting, or Front Brushguard for brushguard mounting.*	191.53
	BM24016	Mid-Range Light Kit *Requires OPS Switch Bank for OPS or poly roof mounting. Can be installed on the front or rear of OPS or roof.*	123.06
	BM24089	OPS Switch Bank *Accommodates up to three separate OPS accessory kits.*	67.41
	BM21652	Rear Light Kit - Deluxe Cab *Requires Electrical Kit.*	217.21
		Protection:	
	BM24282	Floormat *Also front floormat on S4*	78.11
	BM24463	Front CV Guards	114.49
	BM22987	Heavy Duty Fender Guard *Compatible with Standard Front Bumper.*	215.07
	BM22841	Heavy Duty Front Brush Guard	249.31
	BM22767	Heavy Duty Rear Bumper	236.47
	BM22962	Rear CV Guards	114.49
	BM22773	Tail Light Protectors	89.89
	LP93107	Vehicle Cover, Cab / ROPS - Black *Available through Order Zone.*	In Catalog
		Seats / Wheels / Tires:	
	LP40587	Camoplast Tracks (825i) *Available through Order Zone*	In Catalog
		Sprayers / Pressure Washers:	
	LP33597	25 Gallon Bed Sprayer *Available through Order Zone*	In Catalog
	LP19490	25 Gallon Portable Sprayer *Available through Order Zone*	In Catalog
	LP20852	45 Gallon Bed Sprayer *Available through Order Zone*	In Catalog
	LP22908	45 Gallon High Performance Sprayer *Available through Order Zone*	In Catalog

XUV 825i Olive & Black
Continued

CODE	ATTACHMENT IDENTIFIER	DESCRIPTION	SUGGESTED LIST PRICE USD ($)
		ATTACHMENTS FOR FIELD CONVERSION Continued...	
	LP20485	45 Gallon Tow-Behind Sprayer *Available through Order Zone*	In Catalog
	LP20853	90 Gallon Bed Sprayer *Available through Order Zone*	In Catalog
	LP22909	90 Gallon High Performance Bed Sprayer *Available through Order Zone*	In Catalog
	LPGP2700GH	GatorPal High Pressure Washer (2700 psi, Honda engine) *Contact Dealer for pricing.*	In Catalog
	LPGP2700GS	GatorPal High Pressure Washer (2700 psi, Subaru engine) *Contact Dealer for pricing.*	In Catalog
	LPGP3000GH	GatorPal High Pressure Washer (3000 psi, Honda engine) *Contact Dealer for pricing.*	In Catalog
	LPGP3000GS	GatorPal High Pressure Washer (3000 psi, Subaru engine) *Contact Dealer for pricing.*	In Catalog
	LP22885	HP 150 in. Precision Boom *Compatible with all High Performance Sprayers* *Available through Order Zone*	In Catalog
	LP39963	HP 45 Gallon Sprayer - Tow Behind *Available through Order Zone*	In Catalog
	LP22884	HP Boomless Nozzles *Compatible with all High Performance Sprayers* *Available through Order Zone*	In Catalog
	LP22911	HP Standard Gator Boom *Compatible with all High Performance Sprayers* *Available through Order Zone*	In Catalog
		Winch:	
	BM24443	Warn® Winch (3000 lb) *Requires 2-Inch Receiver Multi-Mount Kit for Front or Rear Receiver Mount.*	770.40
	BM23105	Winch - 2 Inch Receiver Multi-Mount Kit	225.77
	BM21392	Winch Accessories Kit *Accessory kit includes 1/2" shackle, 9,000 lbs. maximum capacity snatch block, (2) 1"x8' tree trunk protectors, and (1) pair of WARN winching gloves.*	129.47
		SERVICE CONTRACTS - RESIDENTIAL OWNERS/USE	
		Visit http://www.JohnDeere.com/ServicePlans for more information on John Deere Service Contracts. May not be Available in Parts of the U.S., Not Available in Canada. Price may vary due to driving distance and/or time from machine to dealership location.	
		John Deere Extended Service Plan - 2-Year Option *Available for T-Series, HPX and XUV utility vehicles only.)* *2-year extended service plan. (1 year of extended service protection);* *2-years of warranty transportation.*	399.99
		John Deere Extended Service Plan - 3-Year Option	569.99

XUV 825i Olive & Black

Continued

CODE	ATTACHMENT IDENTIFIER	DESCRIPTION	SUGGESTED LIST PRICE USD ($)
		SERVICE CONTRACTS - RESIDENTIAL OWNERS/USE	
		Continued...	
		3-year extended service plan. (2 years of extended service protection);	
		3-years of warranty transportation.	

XUV 825i Power Steering Olive & Black

Equipment for Base Machine

ENGINE:
50 Engine HP*(812cc),
Electronic Fuel Injection
(EFI)
Three Cylinder, Liquid-cooled,
Dual Overhead Cams,
4-Cycle Gasoline
Full Pressure Lubrication
System
Replaceable Single Dry-Type
Element Air Cleaner with
Remote Intake
7.0 Gallon (26.49L) Fuel
Capacity
Solid-state Ignition (12V)
Spark-arresting Muffler
ELECTRICAL:
Electric Start
75 Amp Alternator
340 CCA Battery
Two 37.5 Watt Halogen
Headlights
Brake and Tail Lights
TRANSAXLE/TRANSMISSION:
Continuously Variable
Transmission
Full Clutch Enclosure
Two-speed Transaxle
Operator Selectable 4WD
44 mph (70 kph) Maximum
Forward Speed
On-demand True Four-Wheel
Drive System
Auto Locking Front Differential
Traction Assist
Front and Rear Hydraulic Disk
Brakes
Hand-operated Sealed Wet Disk
Park brake
1.3 In. (27mm) Forged Rear
Axles
STEERING/SUSPENSION:
Power Steering
Rack and Pinion Steering
Independent Front Suspension
(IRS) with 8 inches (203mm)
of travel
Independent Rear Suspension
(IRS) with 9 inches (228.6mm)
of travel
Integrated 2" Rear Receiver
12.4 ft. Turning Radius
Ground Clearance: 11 In.
(267 mm)
Ground Clearance
(Under Foot Platform):
12.25 In (311 mm)
FRAME/STYLED PARTS:
Hydroform Technology Frame
PC/ASA (JDLOY) Hood and
Fenders
OCCUPANT PROTECTION SYSTEM(OPS):
1.75 In. (44.4 mm) Steel Tubular
Overhead Structure
Multiple Passenger Handholds
3-pt. Seat Belts
SAE J2194 & OSHA ROPS Certified
OPERATOR STATION:
High-back Bucket Seats
7 In. (178 mm) Slide Rail
Adjustment on Driver's Seat
Hip Restraint Bars for Driver
and Passenger
Passenger Grab Handles
Glove Box
Storage Compartment Under Hood
Two Cup Holders
Instrument gauge with 4
wheel-drive indicator, RPM,
MPH/KPH, time of day, fuel
level, total miles and hour
meters
12v DC Outlet
FRONTAL PROTECTION:
Heavy-Duty Front Bumper
Integrated 2 Inch Front Receiver
Hitch
REAR PROTECTION:
Skid Plate and Close Out Panel
DIMENSIONS(WITH OPS):
116 In. Long x 62 In.
Wide x 75 Inches High
PAYLOAD CAPACITY:
1,400 Lb (635 kg) Total Payload
Capacity which Includes:
200 Lb (91 kg) Driver,
200 Lb (91 kg) Passenger, and
1000 Lb (454 kg) in Cargo Box
Towing Capacity:
1,500 Lb (680kg)
CARGO BOX:
45 In. Long x 52 In. Wide x
12 In. Deep
(1,143mm x 1321mm x 305mm)
16.4cu. ft (.46 cu.m) Capacity
1000 Lbs (454 kg) Box Capacity
Tilting Box
Hinged (Bottom) Tailgate
Load Guard
TIRES:
Front: 26x9-12 Ancla XT
(Extreme Terrain Tires)
Rear: 26x11-12 Ancla XT
(Extreme Terrain Tires)
SAFETY VIDEO TAPE:
Safety and Operational DVD
Operators Manual
*Engine HP is Provided by the
Engine Manufacturer to be Used
for Comparison Purposes Only,
Actual Operating HP will be
Less.

CODE	ATTACHMENT IDENTIFIER	DESCRIPTION	SUGGESTED LIST PRICE USD ($)

Select One Code From Each Required Category

BASE MACHINE

F.O.B. Janesville, Wisconsin

397KM	XUV 825i Power Steering Olive & Black *Base Machine Suggested List Price Does Not Include $400 USD Destination Charge.*	12,899.00

DESTINATION

0202	US/Canada	In Base Price
0230	Australia/New Zealand	Same Price
0195	Mexico	Same Price

XUV 825i Power Steering Olive & Black
Continued

CODE	ATTACHMENT IDENTIFIER	DESCRIPTION	SUGGESTED LIST PRICE USD ($)
		DESTINATION Continued...	
0250		All Other Countries	Same Price
0179		Europe	312.00
		WHEELS WITH TIRES (FOUR)	
1000		Black Steel Wheels Terra Hawk All Terrain Tires	Same Price
1001		Black Steel Wheels Ancla M-T Extreme Terrain Tire	In Base Price
1002		Black Alloy Wheels Maxxis Bighorn Radial Tires	823.00
1003		Silver Alloy Wheels Maxxis Bighorn Radial Tires	823.00
		DRIVER SEAT	
2000		21 In. Standard XUV HB Seat - Black	In Base Price
2001		Bench Seat - Black	Same Price
2002		High Performance Sport Seat - Black	296.00
		DELUXE CARGO BOX	
3000		Deluxe Cargo Box with Paint, Brake, Tail & Reverse Lights	In Base Price
3002		Deluxe Cargo Box with Polyurea Liner, Brake, Tail, Reverse Lights & Light Protector	348.00
		OVERHEAD PROTECTION STRUCTURES (OPS)	
4000		OPS	In Base Price
4002		Deluxe Cab Frame/Including Windshield, Wiper, Electrical Kit and Rear Window	2,368.00
4008		OPS with Black Poly Roof	416.00
		POWER AND FRONT PROTECTION PACKAGE	
5000		Power and Front Protection Package Package Consists of: Power Lift, Heavy Duty Front Brushguard, Heavy Duty Front Fender Guard, Floor Mats *Package Priced at 10% discount.*	1,261.00
5010		Manual Lift *Must order 5010 option code when ordering 6000 option code.*	In Base Price
		REAR PROTECTION PACKAGE	
5100		Rear Protection Package Package Consists of: Rear Bumper, Bed Mat, Cargo Box Heavy Duty Fender Guards *Package Priced at 10% discount.*	494.00
5110		Less Rear Protection Package	In Base Price
		FRONT BRUSH GUARD	
6000		Heavy Duty Front Brushguard	233.00

XUV 825i Power Steering Olive & Black
Continued

CODE	ATTACHMENT IDENTIFIER	DESCRIPTION	SUGGESTED LIST PRICE USD ($)
		FRONT BRUSH GUARD Continued...	
6010		Less Front Brush Guard *Must order 6010 option code when ordering 5000 option code.*	In Base Price
		MUFFLER	
6100		Standard Muffler	In Base Price
6200		High Performance Slip-On Exhaust	430.00
		HOOD RACK	
6300		Front Hood Rack XUV *Must order 5000 or 6000 option code when ordering 6300 option code.*	226.00
6310		Less Front Hood Rack XUV *Must order 6310 option code when ordering 4002 option code.*	In Base Price
		Attachments-Order as Desired	
		Spanish North American Kit:	
9435		Spanish North American Operator's Manual and Decal Kit	No Charge
		ATTACHMENTS FOR FIELD CONVERSION	
		Blades:	
	LP25355	Heavy Duty POWERtach Blade - 72" *Available through Order Zone*	In Catalog
	LPPK140	POWERtach Deflector Shield *Available through Order Zone*	In Catalog
	LPPK120	POWERtach Markers *Available through Order Zone*	In Catalog
	LPPWBK72	POWERtach Poly Wear Bar *Available through Order Zone*	In Catalog
	LPPK150	POWERtach Rubber Squeegee *Available through Order Zone*	In Catalog
	LPPK160	POWERtach Skid Shoes *Available through Order Zone*	In Catalog
		Cabs/Roofs/Windshields:	
	BM23768	Air Cleaner Relocation Kit (Gas) *Quiet Cab Kit for Deluxe Cab. Requires Noise Reduction Kit. Can also be used with Poly Cab for noise reduction.*	11.77
	BM23608	Cab Heater *Requires Cab Heater Fitting Kit.*	1,130.99
	BM23509	Cab Heater Fitting Kit	112.36

XUV 825i Power Steering Olive & Black
Continued

CODE	ATTACHMENT IDENTIFIER	DESCRIPTION	SUGGESTED LIST PRICE USD ($)
		ATTACHMENTS FOR FIELD CONVERSION Continued...	
	BM23498	Deluxe Cab Frame *Requires Seat Belt Kit, Glass Door Kit, Glass Windshield with Wiper, and Rear Window Kit to complete full Deluxe Cab.*	1,443.43
	VGB10505	Electrical Kit *Required for field installed Deluxe cabs.*	94.16
	BM24560	Glass Door Kit - Deluxe Cab	2,427.83
	BM23507	Glass Windshield with Wiper - Deluxe Cab	874.19
	BM21656	Interior Light Kit - Deluxe Cab *Requires Electrical Kit.*	58.86
	BM23750	Noise Reduction Kit (Gas & Diesel) *Quiet Cab Kit for Deluxe Cab. Requires Air Cleaner Relocation Kit.*	373.43
	BM23742	OPS Full No-Scratch Windshield *Not compatible with Deluxe Cab Frame. Compatible with poly cab.*	531.79
	BM23741	OPS Full Poly Windshield *Not compatible with Deluxe Cab Frame. Compatible with poly cab.*	423.71
	BM23743	OPS Glass Windshield with Wiper *Not compatible with Deluxe Cab Frame. Compatible with poly cab.*	874.19
	BM23740	OPS Half Poly Windshield *Not compatible with Deluxe Cab Frame.*	339.19
	BM24115	OPS Poly Roof - Black	445.11
	BM24561	OPS Rear Panel *Part of the Poly cab, or can be mounted on the OPS alone. Requires full windshield, poly cab doors, and poly roof to complete poly cab.*	502.90
	LP10314	OPS Side Mirror - Left *Available through Order Zone.*	In Catalog
	LP10315	OPS Side Mirror - Right *Available through Order Zone.*	In Catalog
	LP93127	OPS Soft Roof - Black *Available through Order Zone*	In Catalog
	BM24117	Poly Cab Doors *Includes left and right doors, with side mirrors. Requires full windshield, OPS rear panel, and poly roof to complete poly cab.*	2,675.00
	BM23505	Rear Window Kit - Deluxe Cab	225.77
	BM23755	Seat Belt Kit *Required with Deluxe Cab Frame*	144.46
	BM23508	Side Mirrors - Deluxe Cab	129.47
	BM21646	Visor (1) Kit - Deluxe cab	70.61

XUV 825i Power Steering Olive & Black
Continued

CODE	ATTACHMENT IDENTIFIER	DESCRIPTION	SUGGESTED LIST PRICE USD ($)
		ATTACHMENTS FOR FIELD CONVERSION Continued...	
	BM23534	Windshield Washer Fluid Kit - Deluxe Cab *Requires Electrical Kit.*	173.34
		Cargo Box Options / Storage:	
	BM23849	5 Gallon Pail Holder	38.51
	BM22772	Cargo Box Bed Mat	119.84
	BM22769	Cargo Box Divider	191.53
	BM22811	Cargo Box FenderGuard *Requires Rear Bumper*	191.53
	BM23694	Cargo Box Power Lift Kit	858.14
	BM22774	Cargo Box Side Extension Kit	511.46
	LP19880	Deluxe Cargo Box Cover - Black *Available through Order Zone*	In Catalog
	BM22980	Front Hood Rack *Requires Front Brush Guard.*	241.81
	LP30320	Fuel Pack *Available through Order Zone*	In Catalog
	LP19878	Gator Gear Organizer - Black *Available through Order Zone*	In Catalog
	LP19886	Gator Tool Box *Contact Dealer for pricing.*	In Catalog
	LP93117	OPS Overhead Organizer - Black *Available through Order Zone*	In Catalog
	LP46485	Ratcheting Rhino Grip *Available through Order Zone.*	In Catalog
	LP25929	Rhino Grip XL - Double *Available through Order Zone.*	In Catalog
	LP25928	Rhino Grip XL - Single *Available through Order Zone.*	In Catalog
	LP19882	Saw Press Bracket *Available through Order Zone*	In Catalog
	BM22775	Side Tool Rack	304.96
	LP93207	Soft Rear Screen and Organizer - Black *Available through Order Zone*	In Catalog
		Carts / Hitches:	
	LPPCT10LXATV	10AT Cart *Available through Order Zone*	In Catalog
	LPPCT17ATJD	17AT Cart *Available through Order Zone.*	In Catalog

XUV 825i Power Steering Olive & Black
Continued

CODE	ATTACHMENT IDENTIFIER	DESCRIPTION	SUGGESTED LIST PRICE USD ($)
		ATTACHMENTS FOR FIELD CONVERSION Continued...	
	LPUT21JD	21 Steel Utility Cart *Available through Order Zone*	In Catalog
	PM05101	Ball Mount - 1.875 in. (48mm)	See Parts
	PM05201	Ball Mount - 2 in. (51mm)	See Parts
	BM22290	Drawbar - 2 in. (51mm)	38.51
		Custom & High Performance:	
	BM24021	Fox ® High Performance Racing Shox	1,758.01
	BM22916	High Performance Slip-On Exhaust	680.51
	BM22703	Seat-Belt Comfort Strap (2) *Also compatible with Deluxe Cab.*	77.04
	BM24453	Stereo Mounting Kit *Includes mounting kit only; must choose one of the following three head units to have complete stereo:* *Radio, Heavy Duty AM / FM / WB / AUX (SWJHD1120)* *Radio, Heavy Duty AM / FM / WB / SAT / I-POD (SWJHD1620)* *Radio, AM / FM / WB / CD / AUX / SAT Ready (SWJHD3620)* *Must order head unit through Parts. Stereo Mounting Kit not compatible with Deluxe Cab.*	521.09
		Hunting / Camo:	
	LP19884	Cargo Box Gun Mount - Black *Available through Order Zone*	In Catalog
	LP10319	Gun Mount Kit - Overhead *Includes 2 Gun Boot VI.* *Available through Order Zone*	In Catalog
	LP93103	Vehicle Cover, Cab / ROPS - Camo *Fits all Models Equipped with OPS and Deluxe Cab Structure.* *Available through Order Zone*	In Catalog
		Lights / Signals:	
	BM24726	Backup Alarm	74.56
	BM24013	Beacon Light *Requires OPS Poly Roof and OPS Switch Bank.*	219.36
	BM21649	Beacon Light Kit - Deluxe Cab *Requires Electrical Kit.*	371.29
	BM24587	Deluxe Signal Light Kit *Includes Turn Signals (Front & Rear) and 4-Way Flashers. Compatible with the 825i and 825i S4 vehicles equipped with the 3000 cargo box option code or 625i, 855D and 855D S4 vehicles equipped with the 3002 Cargo Box option code which already includes the brake & tail lights.*	171.20
	BM21651	Front Light Kit - Deluxe Cab *Requires Electrical Kit.*	293.19
	BM23442	Hella HID Sport Driving Lights *Requires OPS Switch Bank for OPS or poly roof mounting, or Front Brushguard for bumper mounting.*	935.19

XUV 825i Power Steering Olive & Black
Continued

CODE	ATTACHMENT IDENTIFIER	DESCRIPTION	SUGGESTED LIST PRICE USD ($)
		ATTACHMENTS FOR FIELD CONVERSION Continued...	
	BM24108	Hella Performance Spot Lights *Requires OPS Switch Bank for OPS or poly roof mounting, or Front Brushguard for bumper mounting.*	343.47
	BM23370	Horn Kit	97.37
	BM24090	Long Range Light Kit *Can also mount behind front bumper cover directly to frame.* *Requires OPS Switch Bank for OPS or poly roof mounting, or Front Brushguard for brushguard mounting.*	191.53
	BM24016	Mid-Range Light Kit *Requires OPS Switch Bank for OPS or poly roof mounting. Can be installed on the front or rear of OPS or roof.*	123.06
	BM24089	OPS Switch Bank *Accommodates up to three separate OPS accessory kits.*	67.41
	BM21652	Rear Light Kit - Deluxe Cab *Requires Electrical Kit.*	217.21
		Protection:	
	BM24282	Floormat *Also front floormat on S4*	78.11
	BM24463	Front CV Guards	114.49
	BM22987	Heavy Duty Fender Guard *Compatible with Standard Front Bumper.*	215.07
	BM22841	Heavy Duty Front Brush Guard	249.31
	BM22767	Heavy Duty Rear Bumper	236.47
	BM22962	Rear CV Guards	114.49
	BM22773	Tail Light Protectors	89.89
	LP93107	Vehicle Cover, Cab / ROPS - Black *Available through Order Zone.*	In Catalog
		Seats / Wheels / Tires:	
	LP40587	Camoplast Tracks (825i) *Available through Order Zone*	In Catalog
		Sprayers / Pressure Washers:	
	LP33597	25 Gallon Bed Sprayer *Available through Order Zone*	In Catalog
	LP19490	25 Gallon Portable Sprayer *Available through Order Zone*	In Catalog
	LP20852	45 Gallon Bed Sprayer *Available through Order Zone*	In Catalog
	LP22908	45 Gallon High Performance Sprayer *Available through Order Zone*	In Catalog

XUV 825i Power Steering Olive & Black

Continued

CODE	ATTACHMENT IDENTIFIER	DESCRIPTION	SUGGESTED LIST PRICE USD ($)
		ATTACHMENTS FOR FIELD CONVERSION Continued...	
	LP20485	45 Gallon Tow-Behind Sprayer *Available through Order Zone*	In Catalog
	LP20853	90 Gallon Bed Sprayer *Available through Order Zone*	In Catalog
	LP22909	90 Gallon High Performance Bed Sprayer *Available through Order Zone*	In Catalog
	LPGP2700GH	GatorPal High Pressure Washer (2700 psi, Honda engine) *Contact Dealer for pricing.*	In Catalog
	LPGP2700GS	GatorPal High Pressure Washer (2700 psi, Subaru engine) *Contact Dealer for pricing.*	In Catalog
	LPGP3000GH	GatorPal High Pressure Washer (3000 psi, Honda engine) *Contact Dealer for pricing.*	In Catalog
	LPGP3000GS	GatorPal High Pressure Washer (3000 psi, Subaru engine) *Contact Dealer for pricing.*	In Catalog
	LP22885	HP 150 in. Precision Boom *Compatible with all High Performance Sprayers* *Available through Order Zone*	In Catalog
	LP39963	HP 45 Gallon Sprayer - Tow Behind *Available through Order Zone*	In Catalog
	LP22884	HP Boomless Nozzles *Compatible with all High Performance Sprayers* *Available through Order Zone*	In Catalog
	LP22911	HP Standard Gator Boom *Compatible with all High Performance Sprayers* *Available through Order Zone*	In Catalog
		Winch:	
	BM24443	Warn® Winch (3000 lb) *Requires 2-Inch Receiver Multi-Mount Kit for Front or Rear Receiver Mount.*	770.40
	BM23105	Winch - 2 Inch Receiver Multi-Mount Kit	225.77
	BM21392	Winch Accessories Kit *Accessory kit includes 1/2" shackle, 9,000 lbs. maximum capacity snatch block, (2) 1"x8' tree trunk protectors, and (1) pair of WARN winching gloves.*	129.47
		SERVICE CONTRACTS - RESIDENTIAL OWNERS/USE	
		Visit http://www.JohnDeere.com/ServicePlans for more information on John Deere Service Contracts. May not be Available in Parts of the U.S., Not Available in Canada. Price may vary due to driving distance and/or time from machine to dealership location.	
		John Deere Extended Service Plan - 2-Year Option *Available for T-Series, HPX and XUV utility vehicles only.)* *2-year extended service plan. (1 year of extended service protection);* *2-years of warranty transportation.*	399.99
		John Deere Extended Service Plan - 3-Year Option	569.99

XUV 825i Power Steering Olive & Black

Continued

CODE	ATTACHMENT IDENTIFIER	DESCRIPTION	SUGGESTED LIST PRICE USD ($)
		SERVICE CONTRACTS - RESIDENTIAL OWNERS/USE	
		Continued...	
		3-year extended service plan. (2 years of extended service protection);	
		3-years of warranty transportation.	

XUV 825i Camo

Equipment for Base Machine

ENGINE:
50 Engine HP*(812cc),
Electronic Fuel Injection (EFI)
Three Cylinder, Liquid-cooled, Dual Overhead Cams, 4-Cycle Gasoline
Full Pressure Lubrication System
Replaceable Single Dry-Type Element Air Cleaner with Remote Intake
7.0 Gallon (26.49L) Fuel Capacity
Solid-state Ignition (12V)
Spark-arresting Muffler
ELECTRICAL:
Electric Start
75 Amp Alternator
340 CCA Battery
Two 37.5 Watt Halogen Headlights
Brake and Tail Lights
TRANSAXLE/TRANSMISSION:
Continuously Variable Transmission
Full Clutch Enclosure
Two-speed Transaxle
Operator Selectable 4WD
44 mph (70 kph) Maximum Forward Speed
On-demand True Four-Wheel Drive System
Auto Locking Front Differential Traction Assist
Front and Rear Hydraulic Disk Brakes
Hand-operated Sealed Wet Disk Park brake
1.3 In. (27mm) Forged Rear Axles
STEERING/SUSPENSION:
Rack and Pinion Steering
Independent Front Suspension (IRS) with 8 inches (203mm) of travel
Independent Rear Suspension (IRS) with 9 inches (228.6mm) of travel
Integrated 2" Rear Receiver
12.4 ft. Turning Radius
Ground Clearance: 11 In. (267 mm)
Ground Clearance (Under Foot Platform): 12.25 In (311 mm)
FRAME/STYLED PARTS:
Hydroform Technology Frame
PC/ASA (JDLOY) Hood and Fenders
OCCUPANT PROTECTION SYSTEM(OPS):
1.75 In. (44.4 mm) Steel Tubular Overhead Structure
Multiple Passenger Handholds
3-pt. Seat Belts
SAE J2194 & OSHA ROPS Certified
OPERATOR STATION:
High-back Bucket Seats
7 In. (178 mm) Slide Rail Adjustment on Driver's Seat
Hip Restraint Bars for Driver and Passenger
Passenger Grab Handles
Glove Box
Storage Compartment Under Hood
Two Cup Holders
Instrument gauge with 4 wheel-drive indicator, RPM, MPH/KPH, time of day, fuel level, total miles and hour meters
12v DC Outlet
Digital Instrument Cluster with (Speed MPH, KH/h, RPM, Hour meter, Odometer with trip, Clock, Water Temp.4WD notice)
FRONTAL PROTECTION:
Heavy-Duty Front Bumper
Integrated 2 Inch Front Receiver Hitch
REAR PROTECTION:
Skid Plate and Close Out Panel
DIMENSIONS(WITH OPS):
119 In. Long x 62 In. Wide x 75 Inches High
PAYLOAD CAPACITY:
1,400 Lb (635 kg) Total Payload Capacity which Includes:
200 Lb (91 kg) Driver,
200 Lb (91 kg) Passenger, and 1000 Lb (454 kg) in Cargo Box
Towing Capacity:
1,500 Lb (680kg)
CARGO BOX:
45 In. Long x 52 In. Wide x 12 In. Deep (1,143mm x 1321mm x 305mm)
16.4cu. ft (.46 cu.m) Capacity
1000 Lbs (454 kg) Box Capacity
Tilting Box
Hinged (Bottom) Tailgate
Load Guard
TIRES:
Front: 26x9-12 Ancla XT (Extreme Terrain Tires)
Rear: 26x11-12 Ancla XT (Extreme Terrain Tires)
SAFETY VIDEO TAPE:
Safety and Operational DVD
Operators Manual
*Engine HP is Provided by the Engine Manufacturer to be Used for Comparison Purposes Only, Actual Operating HP will be Less.

CODE	ATTACHMENT IDENTIFIER	DESCRIPTION	SUGGESTED LIST PRICE USD ($)

Select One Code From Each Required Category

BASE MACHINE

F.O.B. Janesville, Wisconsin

397HM	XUV 825i Camo *Base Machine Suggested List Price Does Not Include $400 USD Destination Charge.*	12,349.00

DESTINATION

0202	US/Canada	In Base Price
0230	Australia/New Zealand	Same Price

XUV 825i Camo
Continued

CODE	ATTACHMENT IDENTIFIER	DESCRIPTION	SUGGESTED LIST PRICE USD ($)
		DESTINATION Continued...	
0195		Mexico	Same Price
0250		All Other Countries	Same Price
0179		Europe	312.00
		WHEELS WITH TIRES (FOUR)	
1000		Black Steel Wheels Terra Hawk All Terrain Tires	Same Price
1001		Black Steel Wheels Ancla M-T Extreme Terrain Tire	In Base Price
1002		Black Alloy Wheels Maxxis Bighorn Radial Tires	823.00
1003		Silver Alloy Wheels Maxxis Bighorn Radial Tires	823.00
		DRIVER SEAT	
2000		21 In. Standard XUV HB Seat - Black	In Base Price
2001		Bench Seat - Black	Same Price
2002		High Performance Sport Seat - Black	296.00
		DELUXE CARGO BOX	
3000		Deluxe Cargo Box with Paint, Brake, Tail & Reverse Lights	In Base Price
3002		Deluxe Cargo Box with Polyurea Liner, Brake, Tail, Reverse Lights & Light Protector	348.00
		OVERHEAD PROTECTION STRUCTURES (OPS)	
4000		OPS	In Base Price
4002		Deluxe Cab Frame/Including Windshield, Wiper, Electrical Kit and Rear Window	2,368.00
4008		OPS with Black Poly Roof	416.00
		POWER AND FRONT PROTECTION PACKAGE	
5000		Power and Front Protection Package Package Consists of: Power Lift, Heavy Duty Front Brushguard, Heavy Duty Front Fender Guard, Floor Mats *Package Priced at 10% discount.*	1,261.00
5010		Manual Lift *Must order 5010 option code when ordering 6000 option code.*	In Base Price
		REAR PROTECTION PACKAGE	
5100		Rear Protection Package Package Consists of: Rear Bumper, Bed Mat, Cargo Box Heavy Duty Fender Guards *Package Priced at 10% discount.*	494.00
5110		Less Rear Protection Package	In Base Price
		FRONT BRUSH GUARD	

XUV 825i Camo
Continued

CODE	ATTACHMENT IDENTIFIER	DESCRIPTION	SUGGESTED LIST PRICE USD ($)
		FRONT BRUSH GUARD Continued...	
6000		Heavy Duty Front Brushguard	233.00
6010		Less Front Brush Guard *Must order 6010 option code when ordering 5000 option code.*	In Base Price
		MUFFLER	
6100		Standard Muffler	In Base Price
6200		High Performance Slip-On Exhaust	430.00
		HOOD RACK	
6300		Front Hood Rack XUV *Must order 5000 or 6000 option code when ordering 6300 option code.*	226.00
6310		Less Front Hood Rack XUV *Must order 6310 option code when ordering 4002 option code.*	In Base Price
		Attachments-Order as Desired	
		Spanish North American Kit:	
9435		Spanish North American Operator's Manual and Decal Kit	No Charge
		ATTACHMENTS FOR FIELD CONVERSION	
		Blades:	
	LP25355	Heavy Duty POWERtach Blade - 72" *Available through Order Zone*	In Catalog
	LPPK140	POWERtach Deflector Shield *Available through Order Zone*	In Catalog
	LPPK120	POWERtach Markers *Available through Order Zone*	In Catalog
	LPPWBK72	POWERtach Poly Wear Bar *Available through Order Zone*	In Catalog
	LPPK150	POWERtach Rubber Squeegee *Available through Order Zone*	In Catalog
	LPPK160	POWERtach Skid Shoes *Available through Order Zone*	In Catalog
		Cabs/Roofs/Windshields:	
	BM23768	Air Cleaner Relocation Kit (Gas) *Quiet Cab Kit for Deluxe Cab. Requires Noise Reduction Kit. Can also be used with Poly Cab for noise reduction.*	11.77
	BM23608	Cab Heater *Requires Cab Heater Fitting Kit.*	1,130.99
	BM23509	Cab Heater Fitting Kit	112.36

XUV 825i Camo
Continued

CODE	ATTACHMENT IDENTIFIER	DESCRIPTION	SUGGESTED LIST PRICE USD ($)
		ATTACHMENTS FOR FIELD CONVERSION Continued...	
	BM23498	Deluxe Cab Frame *Requires Seat Belt Kit, Glass Door Kit, Glass Windshield with Wiper, and Rear Window Kit to complete full Deluxe Cab.*	1,443.43
	VGB10505	Electrical Kit *Required for field installed Deluxe cabs.*	94.16
	BM24560	Glass Door Kit - Deluxe Cab	2,427.83
	BM23507	Glass Windshield with Wiper - Deluxe Cab	874.19
	BM21656	Interior Light Kit - Deluxe Cab *Requires Electrical Kit.*	58.86
	BM23750	Noise Reduction Kit (Gas & Diesel) *Quiet Cab Kit for Deluxe Cab. Requires Air Cleaner Relocation Kit.*	373.43
	BM23742	OPS Full No-Scratch Windshield *Not compatible with Deluxe Cab Frame. Compatible with poly cab.*	531.79
	BM23741	OPS Full Poly Windshield *Not compatible with Deluxe Cab Frame. Compatible with poly cab.*	423.71
	BM23743	OPS Glass Windshield with Wiper *Not compatible with Deluxe Cab Frame. Compatible with poly cab.*	874.19
	BM23740	OPS Half Poly Windshield *Not compatible with Deluxe Cab Frame.*	339.19
	BM24115	OPS Poly Roof - Black	445.11
	BM24320	OPS Poly Roof - Camo	802.50
	BM24561	OPS Rear Panel *Part of the Poly cab, or can be mounted on the OPS alone. Requires full windshield, poly cab doors, and poly roof to complete poly cab.*	502.90
	LP10314	OPS Side Mirror - Left *Available through Order Zone.*	In Catalog
	LP10315	OPS Side Mirror - Right *Available through Order Zone.*	In Catalog
	LP93127	OPS Soft Roof - Black *Available through Order Zone*	In Catalog
	LP93123	OPS Soft Roof - Camo *Available through Order Zone*	In Catalog
	BM24117	Poly Cab Doors *Includes left and right doors, with side mirrors. Requires full windshield, OPS rear panel, and poly roof to complete poly cab.*	2,675.00
	BM23505	Rear Window Kit - Deluxe Cab	225.77
	BM23755	Seat Belt Kit *Required with Deluxe Cab Frame*	144.46

XUV 825i Camo
Continued

CODE	ATTACHMENT IDENTIFIER	DESCRIPTION	SUGGESTED LIST PRICE USD ($)
		ATTACHMENTS FOR FIELD CONVERSION Continued...	
	BM23508	Side Mirrors - Deluxe Cab	129.47
	BM21646	Visor (1) Kit - Deluxe cab	70.61
	BM23534	Windshield Washer Fluid Kit - Deluxe Cab *Requires Electrical Kit.*	173.34
		Cargo Box Options / Storage:	
	BM23849	5 Gallon Pail Holder	38.51
	BM22772	Cargo Box Bed Mat	119.84
	BM22769	Cargo Box Divider	191.53
	BM22811	Cargo Box FenderGuard *Requires Rear Bumper*	191.53
	BM23694	Cargo Box Power Lift Kit	858.14
	BM22774	Cargo Box Side Extension Kit	511.46
	LP19880	Deluxe Cargo Box Cover - Black *Available through Order Zone*	In Catalog
	BM22980	Front Hood Rack *Requires Front Brush Guard.*	241.81
	LP30320	Fuel Pack *Available through Order Zone*	In Catalog
	LP19878	Gator Gear Organizer - Black *Available through Order Zone*	In Catalog
	LP19886	Gator Tool Box *Contact Dealer for pricing.*	In Catalog
	LP93117	OPS Overhead Organizer - Black *Available through Order Zone*	In Catalog
	LP93113	OPS Overhead Organizer - Camo *Available through Order Zone*	In Catalog
	LP46485	Ratcheting Rhino Grip *Available through Order Zone.*	In Catalog
	LP25929	Rhino Grip XL - Double *Available through Order Zone.*	In Catalog
	LP25928	Rhino Grip XL - Single *Available through Order Zone.*	In Catalog
	LP19882	Saw Press Bracket *Available through Order Zone*	In Catalog
	BM22775	Side Tool Rack	304.96

XUV 825i Camo
Continued

CODE	ATTACHMENT IDENTIFIER	DESCRIPTION	SUGGESTED LIST PRICE USD ($)
		ATTACHMENTS FOR FIELD CONVERSION Continued...	
	LP93207	Soft Rear Screen and Organizer - Black *Available through Order Zone*	In Catalog
		Carts / Hitches:	
	LPPCT10LXATV	10AT Cart *Available through Order Zone*	In Catalog
	LPPCT17ATJD	17AT Cart *Available through Order Zone.*	In Catalog
	LPUT21JD	21 Steel Utility Cart *Available through Order Zone*	In Catalog
	PM05101	Ball Mount - 1.875 in. (48mm)	See Parts
	PM05201	Ball Mount - 2 in. (51mm)	See Parts
	BM22290	Drawbar - 2 in. (51mm)	38.51
		Custom & High Performance:	
	BM24021	Fox ® High Performance Racing Shox	1,758.01
	BM22916	High Performance Slip-On Exhaust	680.51
	BM22703	Seat-Belt Comfort Strap (2) *Also compatible with Deluxe Cab.*	77.04
	BM24453	Stereo Mounting Kit *Includes mounting kit only; must choose one of the following three head units to have complete stereo:* *Radio, Heavy Duty AM / FM / WB / AUX (SWJHD1120)* *Radio, Heavy Duty AM / FM / WB / SAT / I-POD (SWJHD1620)* *Radio, AM / FM / WB / CD / AUX / SAT Ready (SWJHD3620)* *Must order head unit through Parts. Stereo Mounting Kit not compatible with Deluxe Cab.*	521.09
		Hunting / Camo:	
	LP19884	Cargo Box Gun Mount - Black *Available through Order Zone*	In Catalog
	LP19879	Deluxe Cargo Box Cover- Camo *Available through Order Zone*	In Catalog
	LP19877	Gator Gear Organizer (Camo) *Available through Order Zone*	In Catalog
	LP10319	Gun Mount Kit - Overhead *Includes 2 Gun Boot VI.* *Available through Order Zone*	In Catalog
	LP93103	Vehicle Cover, Cab / ROPS - Camo *Fits all Models Equipped with OPS and Deluxe Cab Structure.* *Available through Order Zone*	In Catalog
		Lights / Signals:	
	BM24726	Backup Alarm	74.56
	BM24013	Beacon Light *Requires OPS Poly Roof and OPS Switch Bank.*	219.36

XUV 825i Camo
Continued

CODE	ATTACHMENT IDENTIFIER	DESCRIPTION	SUGGESTED LIST PRICE USD ($)
		ATTACHMENTS FOR FIELD CONVERSION Continued...	
	BM21649	Beacon Light Kit - Deluxe Cab *Requires Electrical Kit.*	371.29
	BM24587	Deluxe Signal Light Kit *Includes Turn Signals (Front & Rear) and 4-Way Flashers. Compatible with the 825i and 825i S4 vehicles equipped with the 3000 cargo box option code or 625i, 855D and 855D S4 vehicles equipped with the 3002 Cargo Box option code which already includes the brake & tail lights.*	171.20
	BM21651	Front Light Kit - Deluxe Cab *Requires Electrical Kit.*	293.19
	BM23442	Hella HID Sport Driving Lights *Requires OPS Switch Bank for OPS or poly roof mounting, or Front Brushguard for bumper mounting.*	935.19
	BM24108	Hella Performance Spot Lights *Requires OPS Switch Bank for OPS or poly roof mounting, or Front Brushguard for bumper mounting.*	343.47
	BM23370	Horn Kit	97.37
	BM24090	Long Range Light Kit *Can also mount behind front bumper cover directly to frame.* *Requires OPS Switch Bank for OPS or poly roof mounting, or Front Brushguard for brushguard mounting.*	191.53
	BM24016	Mid-Range Light Kit *Requires OPS Switch Bank for OPS or poly roof mounting. Can be installed on the front or rear of OPS or roof.*	123.06
	BM24089	OPS Switch Bank *Accommodates up to three separate OPS accessory kits.*	67.41
	BM21652	Rear Light Kit - Deluxe Cab *Requires Electrical Kit.*	217.21
		Protection:	
	BM24282	Floormat *Also front floormat on S4*	78.11
	BM24463	Front CV Guards	114.49
	BM22987	Heavy Duty Fender Guard *Compatible with Standard Front Bumper.*	215.07
	BM22841	Heavy Duty Front Brush Guard	249.31
	BM22767	Heavy Duty Rear Bumper	236.47
	BM22962	Rear CV Guards	114.49
	BM22773	Tail Light Protectors	89.89
	LP93107	Vehicle Cover, Cab / ROPS - Black *Available through Order Zone.*	In Catalog

XUV 825i Camo
Continued

CODE	ATTACHMENT IDENTIFIER	DESCRIPTION	SUGGESTED LIST PRICE USD ($)
		ATTACHMENTS FOR FIELD CONVERSION Continued...	
		Seats / Wheels / Tires:	
	LP40587	Camoplast Tracks (825i) *Available through Order Zone*	In Catalog
		Sprayers / Pressure Washers:	
	LP33597	25 Gallon Bed Sprayer *Available through Order Zone*	In Catalog
	LP19490	25 Gallon Portable Sprayer *Available through Order Zone*	In Catalog
	LP20852	45 Gallon Bed Sprayer *Available through Order Zone*	In Catalog
	LP22908	45 Gallon High Performance Sprayer *Available through Order Zone*	In Catalog
	LP20485	45 Gallon Tow-Behind Sprayer *Available through Order Zone*	In Catalog
	LP20853	90 Gallon Bed Sprayer *Available through Order Zone*	In Catalog
	LP22909	90 Gallon High Performance Bed Sprayer *Available through Order Zone*	In Catalog
	LPGP2700GH	GatorPal High Pressure Washer (2700 psi, Honda engine) *Contact Dealer for pricing.*	In Catalog
	LPGP2700GS	GatorPal High Pressure Washer (2700 psi, Subaru engine) *Contact Dealer for pricing.*	In Catalog
	LPGP3000GH	GatorPal High Pressure Washer (3000 psi, Honda engine) *Contact Dealer for pricing.*	In Catalog
	LPGP3000GS	GatorPal High Pressure Washer (3000 psi, Subaru engine) *Contact Dealer for pricing.*	In Catalog
	LP22885	HP 150 in. Precision Boom *Compatible with all High Performance Sprayers* *Available through Order Zone*	In Catalog
	LP39963	HP 45 Gallon Sprayer - Tow Behind *Available through Order Zone*	In Catalog
	LP22884	HP Boomless Nozzles *Compatible with all High Performance Sprayers* *Available through Order Zone*	In Catalog
	LP22911	HP Standard Gator Boom *Compatible with all High Performance Sprayers* *Available through Order Zone*	In Catalog
		Winch:	
	BM24443	Warn® Winch (3000 lb) *Requires 2-Inch Receiver Multi-Mount Kit for Front or Rear Receiver Mount.*	770.40
	BM23105	Winch - 2 Inch Receiver Multi-Mount Kit	225.77

XUV 825i Camo
Continued

CODE	ATTACHMENT IDENTIFIER	DESCRIPTION	SUGGESTED LIST PRICE USD ($)
		ATTACHMENTS FOR FIELD CONVERSION Continued...	
	BM21392	Winch Accessories Kit *Accessory kit includes 1/2" shackle, 9,000 lbs. maximum capacity snatch block, (2) 1"x8' tree trunk protectors, and (1) pair of WARN winching gloves.*	129.47
		SERVICE CONTRACTS - RESIDENTIAL OWNERS/USE	
		Visit http://www.JohnDeere.com/ServicePlans for more information on John Deere Service Contracts. May not be Available in Parts of the U.S., Not Available in Canada. Price may vary due to driving distance and/or time from machine to dealership location.	
		John Deere Extended Service Plan - 2-Year Option *Available for T-Series, HPX and XUV utility vehicles only.)* *2-year extended service plan. (1 year of extended service protection);* *2-years of warranty transportation.*	399.99
		John Deere Extended Service Plan - 3-Year Option *3-year extended service plan. (2 years of extended service protection);* *3-years of warranty transportation.*	569.99

XUV 825i Power Steering Camo

Equipment for Base Machine

ENGINE:
50 Engine HP*(812cc),
Electronic Fuel Injection
(EFI)
Three Cylinder, Liquid-cooled,
Dual Overhead Cams,
4-Cycle Gasoline
Full Pressure Lubrication
System
Replaceable Single Dry-Type
Element Air Cleaner with
Remote Intake
7.0 Gallon (26.49L) Fuel
Capacity
Solid-state Ignition (12V)
Spark-arresting Muffler
ELECTRICAL:
Electric Start
75 Amp Alternator
340 CCA Battery
Two 37.5 Watt Halogen
Headlights
Brake and Tail Lights
TRANSAXLE/TRANSMISSION:
Continuously Variable
Transmission
Full Clutch Enclosure
Two-speed Transaxle
Operator Selectable 4WD
44 mph (70 kph) Maximum
Forward Speed
On-demand True Four-Wheel
Drive System
Auto Locking Front Differential
Traction Assist
Front and Rear Hydraulic Disk
Brakes
Hand-operated Sealed Wet Disk
Park brake
1.3 In. (27mm) Forged Rear
Axles
STEERING/SUSPENSION:
Power Steering
Rack and Pinion Steering
Independent Front Suspension
(IRS) with 8 inches (203mm)
of travel
Independent Rear Suspension
(IRS) with 9 inches (228.6mm)
of travel
Integrated 2" Rear Receiver
12.4 ft. Turning Radius
Ground Clearance: 11 In.
(267 mm)
Ground Clearance
(Under Foot Platform):
12.25 In (311 mm)
FRAME/STYLED PARTS:
Hydroform Technology Frame
PC/ASA (JDLOY) Hood and
Fenders
OCCUPANT PROTECTION SYSTEM(OPS):
1.75 In. (44.4 mm) Steel Tubular
Overhead Structure
Multiple Passenger Handholds
3-pt. Seat Belts
SAE J2194 & OSHA ROPS Certified
OPERATOR STATION:
High-back Bucket Seats
7 In. (178 mm) Slide Rail
Adjustment on Driver's Seat
Hip Restraint Bars for Driver
and Passenger
Passenger Grab Handles
Glove Box
Storage Compartment Under Hood
Two Cup Holders
Instrument gauge with 4
wheel-drive indicator, RPM,
MPH/KPH, time of day, fuel
level, total miles and hour
meters
12v DC Outlet
FRONTAL PROTECTION:
Heavy-Duty Front Bumper
Integrated 2 Inch Front Receiver
Hitch
REAR PROTECTION:
Skid Plate and Close Out Panel
DIMENSIONS(WITH OPS):
116 In. Long x 62 In.
Wide x 75 Inches High
PAYLOAD CAPACITY:
1,400 Lb (635 kg) Total Payload
Capacity which Includes:
200 Lb (91 kg) Driver,
200 Lb (91 kg) Passenger, and
1000 Lb (454 kg) in Cargo Box
Towing Capacity:
1,500 Lb (680kg)
CARGO BOX:
45 In. Long x 52 In. Wide x
12 In. Deep
(1,143mm x 1321mm x 305mm)
16.4cu. ft (.46 cu.m) Capacity
1000 Lbs (454 kg) Box Capacity
Tilting Box
Hinged (Bottom) Tailgate
Load Guard
TIRES:
Front: 26x9-12 Ancla XT
(Extreme Terrain Tires)
Rear: 26x11-12 Ancla XT
(Extreme Terrain Tires)
SAFETY VIDEO TAPE:
Safety and Operational DVD
Operators Manual
*Engine HP is Provided by the
Engine Manufacturer to be Used
for Comparison Purposes Only,
Actual Operating HP will be
Less.

CODE	ATTACHMENT IDENTIFIER	DESCRIPTION	SUGGESTED LIST PRICE USD ($)

Select One Code From Each Required Category

BASE MACHINE

F.O.B. Janesville, Wisconsin

397LM	XUV 825i Power Steering Camo *Base Machine Suggested List Price Does Not Include $400 USD Destination Charge.*	13,349.00

DESTINATION

0202	US/Canada	In Base Price
0230	Australia/New Zealand	Same Price
0195	Mexico	Same Price

XUV 825i Power Steering Camo
Continued

CODE	ATTACHMENT IDENTIFIER	DESCRIPTION	SUGGESTED LIST PRICE USD ($)
		DESTINATION Continued...	
0250		All Other Countries	Same Price
0179		Europe	312.00
		WHEELS WITH TIRES (FOUR)	
1000		Black Steel Wheels Terra Hawk All Terrain Tires	Same Price
1001		Black Steel Wheels Ancla M-T Extreme Terrain Tire	In Base Price
1002		Black Alloy Wheels Maxxis Bighorn Radial Tires	823.00
1003		Silver Alloy Wheels Maxxis Bighorn Radial Tires	823.00
		DRIVER SEAT	
2000		21 In. Standard XUV HB Seat - Black	In Base Price
2001		Bench Seat - Black	Same Price
2002		High Performance Sport Seat - Black	296.00
		DELUXE CARGO BOX	
3000		Deluxe Cargo Box with Paint, Brake, Tail & Reverse Lights	In Base Price
3002		Deluxe Cargo Box with Polyurea Liner, Brake, Tail, Reverse Lights & Light Protector	348.00
		OVERHEAD PROTECTION STRUCTURES (OPS)	
4000		OPS	In Base Price
4002		Deluxe Cab Frame/Including Windshield, Wiper, Electrical Kit and Rear Window	2,368.00
4008		OPS with Black Poly Roof	416.00
		POWER AND FRONT PROTECTION PACKAGE	
5000		Power and Front Protection Package Package Consists of: Power Lift, Heavy Duty Front Brushguard, Heavy Duty Front Fender Guard, Floor Mats *Package Priced at 10% discount.*	1,261.00
5010		Manual Lift *Must order 5010 option code when ordering 6000 option code.*	In Base Price
		REAR PROTECTION PACKAGE	
5100		Rear Protection Package Package Consists of: Rear Bumper, Bed Mat, Cargo Box Heavy Duty Fender Guards *Package Priced at 10% discount.*	494.00
5110		Less Rear Protection Package	In Base Price
		FRONT BRUSH GUARD	
6000		Heavy Duty Front Brushguard	233.00

XUV 825i Power Steering Camo
Continued

CODE	ATTACHMENT IDENTIFIER	DESCRIPTION	SUGGESTED LIST PRICE USD ($)
		FRONT BRUSH GUARD Continued...	
6010		Less Front Brush Guard *Must order 6010 option code when ordering 5000 option code.*	In Base Price
		MUFFLER	
6100		Standard Muffler	In Base Price
6200		High Performance Slip-On Exhaust	430.00
		HOOD RACK	
6300		Front Hood Rack XUV *Must order 5000 or 6000 option code when ordering 6300 option code.*	226.00
6310		Less Front Hood Rack XUV *Must order 6310 option code when ordering 4002 option code.*	In Base Price
		Attachments-Order as Desired	
		Spanish North American Kit:	
9435		Spanish North American Operator's Manual and Decal Kit	No Charge
		ATTACHMENTS FOR FIELD CONVERSION	
		Blades:	
	LP25355	Heavy Duty POWERtach Blade - 72" *Available through Order Zone*	In Catalog
	LPPK140	POWERtach Deflector Shield *Available through Order Zone*	In Catalog
	LPPK120	POWERtach Markers *Available through Order Zone*	In Catalog
	LPPWBK72	POWERtach Poly Wear Bar *Available through Order Zone*	In Catalog
	LPPK150	POWERtach Rubber Squeegee *Available through Order Zone*	In Catalog
	LPPK160	POWERtach Skid Shoes *Available through Order Zone*	In Catalog
		Cabs/Roofs/Windshields:	
	BM23768	Air Cleaner Relocation Kit (Gas) *Quiet Cab Kit for Deluxe Cab. Requires Noise Reduction Kit. Can also be used with Poly Cab for noise reduction.*	11.77
	BM23608	Cab Heater *Requires Cab Heater Fitting Kit.*	1,130.99
	BM23509	Cab Heater Fitting Kit	112.36

XUV 825i Power Steering Camo
Continued

CODE	ATTACHMENT IDENTIFIER	DESCRIPTION	SUGGESTED LIST PRICE USD ($)
		ATTACHMENTS FOR FIELD CONVERSION Continued...	
	BM23498	Deluxe Cab Frame *Requires Seat Belt Kit, Glass Door Kit, Glass Windshield with Wiper, and Rear Window Kit to complete full Deluxe Cab.*	1,443.43
	VGB10505	Electrical Kit *Required for field installed Deluxe cabs.*	94.16
	BM24560	Glass Door Kit - Deluxe Cab	2,427.83
	BM23507	Glass Windshield with Wiper - Deluxe Cab	874.19
	BM21656	Interior Light Kit - Deluxe Cab *Requires Electrical Kit.*	58.86
	BM23750	Noise Reduction Kit (Gas & Diesel) *Quiet Cab Kit for Deluxe Cab. Requires Air Cleaner Relocation Kit.*	373.43
	BM23742	OPS Full No-Scratch Windshield *Not compatible with Deluxe Cab Frame. Compatible with poly cab.*	531.79
	BM23741	OPS Full Poly Windshield *Not compatible with Deluxe Cab Frame. Compatible with poly cab.*	423.71
	BM23743	OPS Glass Windshield with Wiper *Not compatible with Deluxe Cab Frame. Compatible with poly cab.*	874.19
	BM23740	OPS Half Poly Windshield *Not compatible with Deluxe Cab Frame.*	339.19
	BM24115	OPS Poly Roof - Black	445.11
	BM24320	OPS Poly Roof - Camo	802.50
	BM24561	OPS Rear Panel *Part of the Poly cab, or can be mounted on the OPS alone. Requires full windshield, poly cab doors, and poly roof to complete poly cab.*	502.90
	LP10314	OPS Side Mirror - Left *Available through Order Zone.*	In Catalog
	LP10315	OPS Side Mirror - Right *Available through Order Zone.*	In Catalog
	LP93127	OPS Soft Roof - Black *Available through Order Zone*	In Catalog
	LP93123	OPS Soft Roof - Camo *Available through Order Zone*	In Catalog
	BM24117	Poly Cab Doors *Includes left and right doors, with side mirrors. Requires full windshield, OPS rear panel, and poly roof to complete poly cab.*	2,675.00
	BM23505	Rear Window Kit - Deluxe Cab	225.77
	BM23755	Seat Belt Kit *Required with Deluxe Cab Frame*	144.46

XUV 825i Power Steering Camo
Continued

CODE	ATTACHMENT IDENTIFIER	DESCRIPTION	SUGGESTED LIST PRICE USD ($)
		ATTACHMENTS FOR FIELD CONVERSION Continued...	
	BM23508	Side Mirrors - Deluxe Cab	129.47
	BM21646	Visor (1) Kit - Deluxe cab	70.61
	BM23534	Windshield Washer Fluid Kit - Deluxe Cab *Requires Electrical Kit.*	173.34
		Cargo Box Options / Storage:	
	BM23849	5 Gallon Pail Holder	38.51
	BM22772	Cargo Box Bed Mat	119.84
	BM22769	Cargo Box Divider	191.53
	BM22811	Cargo Box FenderGuard *Requires Rear Bumper*	191.53
	BM23694	Cargo Box Power Lift Kit	858.14
	BM22774	Cargo Box Side Extension Kit	511.46
	LP19880	Deluxe Cargo Box Cover - Black *Available through Order Zone*	In Catalog
	BM22980	Front Hood Rack *Requires Front Brush Guard.*	241.81
	LP30320	Fuel Pack *Available through Order Zone*	In Catalog
	LP19878	Gator Gear Organizer - Black *Available through Order Zone*	In Catalog
	LP19886	Gator Tool Box *Contact Dealer for pricing.*	In Catalog
	LP93117	OPS Overhead Organizer - Black *Available through Order Zone*	In Catalog
	LP93113	OPS Overhead Organizer - Camo *Available through Order Zone*	In Catalog
	LP46485	Ratcheting Rhino Grip *Available through Order Zone.*	In Catalog
	LP25929	Rhino Grip XL - Double *Available through Order Zone.*	In Catalog
	LP25928	Rhino Grip XL - Single *Available through Order Zone.*	In Catalog
	LP19882	Saw Press Bracket *Available through Order Zone*	In Catalog
	BM22775	Side Tool Rack	304.96

XUV 825i Power Steering Camo
Continued

CODE	ATTACHMENT IDENTIFIER	DESCRIPTION	SUGGESTED LIST PRICE USD ($)
		ATTACHMENTS FOR FIELD CONVERSION Continued...	
	LP93207	Soft Rear Screen and Organizer - Black *Available through Order Zone*	In Catalog
		Carts / Hitches:	
	LPPCT10LXATV	10AT Cart *Available through Order Zone*	In Catalog
	LPPCT17ATJD	17AT Cart *Available through Order Zone.*	In Catalog
	LPUT21JD	21 Steel Utility Cart *Available through Order Zone*	In Catalog
	PM05101	Ball Mount - 1.875 in. (48mm)	See Parts
	PM05201	Ball Mount - 2 in. (51mm)	See Parts
	BM22290	Drawbar - 2 in. (51mm)	38.51
		Custom & High Performance:	
	BM24021	Fox ® High Performance Racing Shox	1,758.01
	BM22916	High Performance Slip-On Exhaust	680.51
	BM22703	Seat-Belt Comfort Strap (2) *Also compatible with Deluxe Cab.*	77.04
	BM24453	Stereo Mounting Kit *Includes mounting kit only; must choose one of the following three head units to have complete stereo:* *Radio, Heavy Duty AM / FM / WB / AUX (SWJHD1120)* *Radio, Heavy Duty AM / FM / WB / SAT / I-POD (SWJHD1620)* *Radio, AM / FM / WB / CD / AUX / SAT Ready (SWJHD3620)* *Must order head unit through Parts. Stereo Mounting Kit not compatible with Deluxe Cab.*	521.09
		Hunting / Camo:	
	LP19884	Cargo Box Gun Mount - Black *Available through Order Zone*	In Catalog
	LP19879	Deluxe Cargo Box Cover- Camo *Available through Order Zone*	In Catalog
	LP19877	Gator Gear Organizer (Camo) *Available through Order Zone*	In Catalog
	LP10319	Gun Mount Kit - Overhead *Includes 2 Gun Boot VI.* *Available through Order Zone*	In Catalog
	LP93103	Vehicle Cover, Cab / ROPS - Camo *Fits all Models Equipped with OPS and Deluxe Cab Structure.* *Available through Order Zone*	In Catalog
		Lights / Signals:	
	BM24726	Backup Alarm	74.56
	BM24013	Beacon Light *Requires OPS Poly Roof and OPS Switch Bank.*	219.36

XUV 825i Power Steering Camo
Continued

CODE	ATTACHMENT IDENTIFIER	DESCRIPTION	SUGGESTED LIST PRICE USD ($)
		ATTACHMENTS FOR FIELD CONVERSION Continued...	
	BM21649	Beacon Light Kit - Deluxe Cab *Requires Electrical Kit.*	371.29
	BM24587	Deluxe Signal Light Kit *Includes Turn Signals (Front & Rear) and 4-Way Flashers. Compatible with the 825i and 825i S4 vehicles equipped with the 3000 cargo box option code or 625i, 855D and 855D S4 vehicles equipped with the 3002 Cargo Box option code which already includes the brake & tail lights.*	171.20
	BM21651	Front Light Kit - Deluxe Cab *Requires Electrical Kit.*	293.19
	BM23442	Hella HID Sport Driving Lights *Requires OPS Switch Bank for OPS or poly roof mounting, or Front Brushguard for bumper mounting.*	935.19
	BM24108	Hella Performance Spot Lights *Requires OPS Switch Bank for OPS or poly roof mounting, or Front Brushguard for bumper mounting.*	343.47
	BM23370	Horn Kit	97.37
	BM24090	Long Range Light Kit *Can also mount behind front bumper cover directly to frame.* *Requires OPS Switch Bank for OPS or poly roof mounting, or Front Brushguard for brushguard mounting.*	191.53
	BM24016	Mid-Range Light Kit *Requires OPS Switch Bank for OPS or poly roof mounting. Can be installed on the front or rear of OPS or roof.*	123.06
	BM24089	OPS Switch Bank *Accommodates up to three separate OPS accessory kits.*	67.41
	BM21652	Rear Light Kit - Deluxe Cab *Requires Electrical Kit.*	217.21
		Protection:	
	BM24282	Floormat *Also front floormat on S4*	78.11
	BM24463	Front CV Guards	114.49
	BM22987	Heavy Duty Fender Guard *Compatible with Standard Front Bumper.*	215.07
	BM22841	Heavy Duty Front Brush Guard	249.31
	BM22767	Heavy Duty Rear Bumper	236.47
	BM22962	Rear CV Guards	114.49
	BM22773	Tail Light Protectors	89.89
	LP93107	Vehicle Cover, Cab / ROPS - Black *Available through Order Zone.*	In Catalog

XUV 825i Power Steering Camo
Continued

CODE	ATTACHMENT IDENTIFIER	DESCRIPTION	SUGGESTED LIST PRICE USD ($)
		ATTACHMENTS FOR FIELD CONVERSION Continued...	
		Seats / Wheels / Tires:	
	LP40587	Camoplast Tracks (825i) *Available through Order Zone*	In Catalog
		Sprayers / Pressure Washers:	
	LP33597	25 Gallon Bed Sprayer *Available through Order Zone*	In Catalog
	LP19490	25 Gallon Portable Sprayer *Available through Order Zone*	In Catalog
	LP20852	45 Gallon Bed Sprayer *Available through Order Zone*	In Catalog
	LP22908	45 Gallon High Performance Sprayer *Available through Order Zone*	In Catalog
	LP20485	45 Gallon Tow-Behind Sprayer *Available through Order Zone*	In Catalog
	LP20853	90 Gallon Bed Sprayer *Available through Order Zone*	In Catalog
	LP22909	90 Gallon High Performance Bed Sprayer *Available through Order Zone*	In Catalog
	LPGP2700GH	GatorPal High Pressure Washer (2700 psi, Honda engine) *Contact Dealer for pricing.*	In Catalog
	LPGP2700GS	GatorPal High Pressure Washer (2700 psi, Subaru engine) *Contact Dealer for pricing.*	In Catalog
	LPGP3000GH	GatorPal High Pressure Washer (3000 psi, Honda engine) *Contact Dealer for pricing.*	In Catalog
	LPGP3000GS	GatorPal High Pressure Washer (3000 psi, Subaru engine) *Contact Dealer for pricing.*	In Catalog
	LP22885	HP 150 in. Precision Boom *Compatible with all High Performance Sprayers* *Available through Order Zone*	In Catalog
	LP39963	HP 45 Gallon Sprayer - Tow Behind *Available through Order Zone*	In Catalog
	LP22884	HP Boomless Nozzles *Compatible with all High Performance Sprayers* *Available through Order Zone*	In Catalog
	LP22911	HP Standard Gator Boom *Compatible with all High Performance Sprayers* *Available through Order Zone*	In Catalog
		Winch:	
	BM24443	Warn® Winch (3000 lb) *Requires 2-Inch Receiver Multi-Mount Kit for Front or Rear Receiver Mount.*	770.40
	BM23105	Winch - 2 Inch Receiver Multi-Mount Kit	225.77

XUV 825i Power Steering Camo
Continued

CODE	ATTACHMENT IDENTIFIER	DESCRIPTION	SUGGESTED LIST PRICE USD ($)
		ATTACHMENTS FOR FIELD CONVERSION Continued...	
	BM21392	Winch Accessories Kit *Accessory kit includes 1/2" shackle, 9,000 lbs. maximum capacity snatch block, (2) 1"x8' tree trunk protectors, and (1) pair of WARN winching gloves.*	129.47
		SERVICE CONTRACTS - RESIDENTIAL OWNERS/USE	
		Visit http://www.JohnDeere.com/ServicePlans for more information on John Deere Service Contracts. May not be Available in Parts of the U.S., Not Available in Canada. Price may vary due to driving distance and/or time from machine to dealership location.	
		John Deere Extended Service Plan - 2-Year Option *Available for T-Series, HPX and XUV utility vehicles only.)* *2-year extended service plan. (1 year of extended service protection);* *2-years of warranty transportation.*	399.99
		John Deere Extended Service Plan - 3-Year Option *3-year extended service plan. (2 years of extended service protection);* *3-years of warranty transportation.*	569.99

XUV 825i S4 Green & Yellow Utility and Protection PR

Equipment for Base Machine

ENGINE:
50 Engine HP*(812cc), Electronic Fuel Injection (EFI)
Three Cylinder, Liquid-cooled, Dual Overhead Cams, 4-Cycle Gasoline
Full Pressure Lubrication System
Replaceable Single Dry-Type Element Air Cleaner with Remote Intake
7.0 Gallon (26.49L) Fuel Capacity
Solid-state Ignition (12V)
Spark-arresting Muffler
ELECTRICAL:
Electric Start
75 Amp Alternator
340 CCA Battery
Two 37.5 Watt Halogen Headlights
Brake and Tail Lights
TRANSAXLE/TRANSMISSION:
Continuously Variable Transmission
Full Clutch Enclosure
Two-speed Transaxle
Operator Selectable 4WD
44 mph (70 kph) Maximum Forward Speed
On-demand True Four-Wheel Drive System
Auto Locking Front Differential Traction Assist
Front and Rear Hydraulic Disk Brakes
Hand-operated Sealed Wet Disk Park brake
1.3 In. (27mm) Forged Rear Axles
STEERING/SUSPENSION:
Power Steering
Rack and Pinion Steering
Independent Front Suspension (IRS) with 8 inches (203mm) of travel
Independent Rear Suspension (IRS) with 9 inches (228.6mm) of travel
Integrated 2" Rear Receiver
12.4 ft. Turning Radius
Ground Clearance: 11 In. (267 mm)
Ground Clearance (Under Foot Platform): 12.25 In (311 mm)
FRAME/STYLED PARTS:
Hydroform Technology Frame
PC/ASA (JDLOY) Hood and Fenders
OCCUPANT PROTECTION SYSTEM(OPS):
1.75 In. (44.4 mm) Steel Tubular Overhead Structure
Multiple Passenger Handholds
3-pt. Seat Belts
SAE J2194 & OSHA ROPS Certified
OPERATOR STATION:
Front and rear bench seats
7 In. (178 mm) Slide Rail
Hip Restraint Bars for Driver and Passenger
Passenger Grab Handles
Glove Box
Storage Compartment Under Hood
Two Cup Holders
Instrument gauge with 4 wheel-drive indicator, RPM, MPH/KPH, time of day, fuel level, total miles and hour meters
12v DC Outlet
FRONTAL PROTECTION:
Heavy-Duty Front Bumper
Integrated 2 Inch Front Receiver Hitch
REAR PROTECTION:
Skid Plate and Close Out Panel
DIMENSIONS(WITH OPS):
154 In. Long (3924.3mm) x 62 In. Wide (1574.8mm) x 75 Inches High (1905mm)
PAYLOAD CAPACITY:
1,400 Lb (635 kg) Total Payload Capacity which Includes:
200 Lb (91 kg) Driver,
200 Lb (91 kg) Passenger, and 1000 Lb (454 kg) in Cargo Box
Towing Capacity:
1,500 Lb (680kg)
CARGO BOX:
45 In. Long x 52 In. Wide x 12 In. Deep (1,143mm x 1321mm x 305mm)
16.4cu. ft (.46 cu.m) Capacity
1000 Lbs (454 kg) Box Capacity
Tilting Box
Hinged (Bottom) Tailgate
Load Guard
TIRES:
Front: 26x9-12 Ancla XT (Extreme Terrain Tires)
Rear: 26x11-12 Ancla XT (Extreme Terrain Tires)
SAFETY VIDEO TAPE:
Safety and Operational DVD
Operators Manual
*Engine HP is Provided by the Engine Manufacturer to be Used for Comparison Purposes Only, Actual Operating HP will be Less.

CODE	ATTACHMENT IDENTIFIER	DESCRIPTION	SUGGESTED LIST PRICE USD ($)

Select One Code From Each Required Category

BASE MACHINE

F.O.B. Janesville, Wisconsin

588AM	XUV 825i S4 Green & Yellow Utility and Protection PR *Base Machine Suggested List Price Does Not Include $400 USD Destination Charge.*	14,199.00

DESTINATION

0202	US/Canada	In Base Price
0230	Australia/New Zealand	Same Price

XUV 825i S4 Green & Yellow Utility and Protection PR
Continued

CODE	ATTACHMENT IDENTIFIER	DESCRIPTION	SUGGESTED LIST PRICE USD ($)
		WHEELS WITH TIRES (FOUR)	
1002		Yellow Alloy Wheels Maxxis Bighorn Radial Tires	823.00
		DRIVER SEAT	
2001		Bench Seat - Yellow	Same Price
		DELUXE CARGO BOX	
3002		Deluxe Cargo Box with Polyurea Liner, Brake, Tail, Reverse Lights & Light Protector	348.00
		OVERHEAD PROTECTION STRUCTURES (OPS)	
4008		OPS with Black Poly Roof	559.00
		POWER AND FRONT PROTECTION PACKAGE	
5000		Power and Front Protection Package Package Consists of: Power Lift, Heavy Duty Front Brushguard, Heavy Duty Front Fender Guard, Front Floor Mats, Rear Floor Mats *Package Priced at 10% discount.*	1,331.00
		REAR PROTECTION PACKAGE	
5100		Rear Protection Package Package Consists of: Rear Bumper, Bed Mat, Cargo Box Heavy Duty Fender Guards *Package Priced at 10% discount.*	494.00
		FRONT BRUSH GUARD	
6010		Less Front Brush Guard *Must order 6010 option code when ordering 5000 option code.*	In Base Price
		MUFFLER	
6100		Standard Muffler	In Base Price
		HOOD RACK	
6310		Less Front Hood Rack XUV *Must order 6310 option code when ordering 4002 option code.*	In Base Price
		ATTACHMENTS FOR FIELD CONVERSION	
		Blades:	
	LP25355	Heavy Duty POWERtach Blade - 72" *Available through Order Zone*	In Catalog
	LPPK140	POWERtach Deflector Shield *Available through Order Zone*	In Catalog
	LPPK120	POWERtach Markers *Available through Order Zone*	In Catalog
	LPPWBK72	POWERtach Poly Wear Bar *Available through Order Zone*	In Catalog

XUV 825i S4 Green & Yellow Utility and Protection PR
Continued

CODE	ATTACHMENT IDENTIFIER	DESCRIPTION	SUGGESTED LIST PRICE USD ($)
		ATTACHMENTS FOR FIELD CONVERSION Continued...	
	LPPK150	POWERtach Rubber Squeegee *Available through Order Zone*	In Catalog
	LPPK160	POWERtach Skid Shoes *Available through Order Zone*	In Catalog
		Cabs/Roofs/Windshields:	
	BM23742	OPS Full No-Scratch Windshield *Not compatible with Deluxe Cab Frame. Compatible with poly cab.*	531.79
	BM23741	OPS Full Poly Windshield *Not compatible with Deluxe Cab Frame. Compatible with poly cab.*	423.71
	BM23743	OPS Glass Windshield with Wiper *Not compatible with Deluxe Cab Frame. Compatible with poly cab.*	874.19
	BM23740	OPS Half Poly Windshield *Not compatible with Deluxe Cab Frame.*	339.19
	BM24116	OPS Poly Roof - S4 (Black)	598.13
	BM24561	OPS Rear Panel *Part of the Poly cab, or can be mounted on the OPS alone. Requires full windshield, poly cab doors, and poly roof to complete poly cab.*	502.90
	LP10314	OPS Side Mirror - Left *Available through Order Zone.*	In Catalog
	LP10315	OPS Side Mirror - Right *Available through Order Zone.*	In Catalog
		Cargo Box Options / Storage:	
	BM23849	5 Gallon Pail Holder	38.51
	BM22772	Cargo Box Bed Mat	119.84
	BM22769	Cargo Box Divider	191.53
	BM22811	Cargo Box FenderGuard *Requires Rear Bumper*	191.53
	BM23694	Cargo Box Power Lift Kit	858.14
	BM22774	Cargo Box Side Extension Kit	511.46
	LP19880	Deluxe Cargo Box Cover - Black *Available through Order Zone*	In Catalog
	BM22980	Front Hood Rack *Requires Front Brush Guard.*	241.81
	LP30320	Fuel Pack *Available through Order Zone*	In Catalog
	LP19878	Gator Gear Organizer - Black *Available through Order Zone*	In Catalog

XUV 825i S4 Green & Yellow Utility and Protection PR
Continued

CODE	ATTACHMENT IDENTIFIER	DESCRIPTION	SUGGESTED LIST PRICE USD ($)
		ATTACHMENTS FOR FIELD CONVERSION Continued...	
	LP19886	Gator Tool Box *Contact Dealer for pricing.*	In Catalog
	LP93117	OPS Overhead Organizer - Black *Available through Order Zone*	In Catalog
	LP46485	Ratcheting Rhino Grip *Available through Order Zone.*	In Catalog
	LP25929	Rhino Grip XL - Double *Available through Order Zone.*	In Catalog
	LP25928	Rhino Grip XL - Single *Available through Order Zone.*	In Catalog
	LP19882	Saw Press Bracket *Available through Order Zone*	In Catalog
	BM22775	Side Tool Rack	304.96
	LP93207	Soft Rear Screen and Organizer - Black *Available through Order Zone*	In Catalog
		Carts / Hitches:	
	LPPCT10LXATV	10AT Cart *Available through Order Zone*	In Catalog
	LPPCT17ATJD	17AT Cart *Available through Order Zone.*	In Catalog
	LPUT21JD	21 Steel Utility Cart *Available through Order Zone*	In Catalog
	PM05101	Ball Mount - 1.875 in. (48mm)	See Parts
	PM05201	Ball Mount - 2 in. (51mm)	See Parts
	BM22290	Drawbar - 2 in. (51mm)	38.51
		Custom & High Performance:	
	BM22916	High Performance Slip-On Exhaust	680.51
	BM22703	Seat-Belt Comfort Strap (2) *Also compatible with Deluxe Cab.*	77.04
	BM24455	Stereo Mounting Kit *Includes mounting kit only; must choose one of the following three head units to have complete stereo:* *Radio, Heavy Duty AM / FM / WB / AUX (SWJHD1120)* *Radio, Heavy Duty AM / FM / WB / SAT / I-POD (SWJHD1620)* *Radio, AM / FM / WB / CD / AUX / SAT Ready (SWJHD3620)* *Must order head unit through Parts. Stereo Mounting Kit not compatible with Deluxe Cab.*	660.19
		Hunting / Camo:	
	LP19884	Cargo Box Gun Mount - Black *Available through Order Zone*	In Catalog

XUV 825i S4 Green & Yellow Utility and Protection PR
Continued

CODE	ATTACHMENT IDENTIFIER	DESCRIPTION	SUGGESTED LIST PRICE USD ($)
		ATTACHMENTS FOR FIELD CONVERSION Continued...	
	LP10319	Gun Mount Kit - Overhead *Includes 2 Gun Boot VI.* *Available through Order Zone*	In Catalog
		Lights / Signals:	
	BM24726	Backup Alarm	74.56
	BM24013	Beacon Light *Requires OPS Poly Roof and OPS Switch Bank.*	219.36
	BM24587	Deluxe Signal Light Kit *Includes Turn Signals (Front & Rear) and 4-Way Flashers. Compatible with the 825i and 825i S4 vehicles equipped with the 3000 cargo box option code or 625i, 855D and 855D S4 vehicles equipped with the 3002 Cargo Box option code which already includes the brake & tail lights.*	171.20
	BM23442	Hella HID Sport Driving Lights *Requires OPS Switch Bank for OPS or poly roof mounting, or Front Brushguard for bumper mounting.*	935.19
	BM24108	Hella Performance Spot Lights *Requires OPS Switch Bank for OPS or poly roof mounting, or Front Brushguard for bumper mounting.*	343.47
	BM23370	Horn Kit	97.37
	BM24090	Long Range Light Kit *Can also mount behind front bumper cover directly to frame.* *Requires OPS Switch Bank for OPS or poly roof mounting, or Front Brushguard for brushguard mounting.*	191.53
	BM24016	Mid-Range Light Kit *Requires OPS Switch Bank for OPS or poly roof mounting. Can be installed on the front or rear of OPS or roof.*	123.06
	BM24273	Mid-Range Light Kit (rear S4 Only) *Requires OPS Switch Bank. Compatible with OPS Poly Roofs, or on the OPS alone.*	123.06
	BM24089	OPS Switch Bank *Accommodates up to three separate OPS accessory kits.*	67.41
		Protection:	
	BM24282	Floormat *Also front floormat on S4*	78.11
	BM24283	Floormat (S4 rear)	78.11
	BM24463	Front CV Guards	114.49
	BM22987	Heavy Duty Fender Guard *Compatible with Standard Front Bumper.*	215.07
	BM22841	Heavy Duty Front Brush Guard	249.31
	BM22767	Heavy Duty Rear Bumper	236.47
	BM22962	Rear CV Guards	114.49

XUV 825i S4 Green & Yellow Utility and Protection PR
Continued

CODE	ATTACHMENT IDENTIFIER	DESCRIPTION	SUGGESTED LIST PRICE USD ($)
		ATTACHMENTS FOR FIELD CONVERSION Continued...	
	BM22773	Tail Light Protectors	89.89
		Seats / Wheels / Tires:	
	LP40587	Camoplast Tracks (825i) *Available through Order Zone*	In Catalog
		Sprayers / Pressure Washers:	
	LP33597	25 Gallon Bed Sprayer *Available through Order Zone*	In Catalog
	LP19490	25 Gallon Portable Sprayer *Available through Order Zone*	In Catalog
	LP20852	45 Gallon Bed Sprayer *Available through Order Zone*	In Catalog
	LP22908	45 Gallon High Performance Sprayer *Available through Order Zone*	In Catalog
	LP20485	45 Gallon Tow-Behind Sprayer *Available through Order Zone*	In Catalog
	LP20853	90 Gallon Bed Sprayer *Available through Order Zone*	In Catalog
	LP22909	90 Gallon High Performance Bed Sprayer *Available through Order Zone*	In Catalog
	LPGP2700GH	GatorPal High Pressure Washer (2700 psi, Honda engine) *Contact Dealer for pricing.*	In Catalog
	LPGP2700GS	GatorPal High Pressure Washer (2700 psi, Subaru engine) *Contact Dealer for pricing.*	In Catalog
	LPGP3000GH	GatorPal High Pressure Washer (3000 psi, Honda engine) *Contact Dealer for pricing.*	In Catalog
	LPGP3000GS	GatorPal High Pressure Washer (3000 psi, Subaru engine) *Contact Dealer for pricing.*	In Catalog
	LP22885	HP 150 in. Precision Boom *Compatible with all High Performance Sprayers* *Available through Order Zone*	In Catalog
	LP39963	HP 45 Gallon Sprayer - Tow Behind *Available through Order Zone*	In Catalog
	LP22884	HP Boomless Nozzles *Compatible with all High Performance Sprayers* *Available through Order Zone*	In Catalog
	LP22911	HP Standard Gator Boom *Compatible with all High Performance Sprayers* *Available through Order Zone*	In Catalog
		Winch:	
	BM24443	Warn® Winch (3000 lb) *Requires RE266640 positive cable and AN305976 ground cable to reach contactor.* *Requires 2-Inch Receiver Multi-Mount Kit for Front or Rear Receiver Mount.*	770.40

XUV 825i S4 Green & Yellow Utility and Protection PR

Continued

CODE	ATTACHMENT IDENTIFIER	DESCRIPTION	SUGGESTED LIST PRICE USD ($)
		ATTACHMENTS FOR FIELD CONVERSION Continued...	
	BM23105	Winch - 2 Inch Receiver Multi-Mount Kit	225.77
	BM21392	Winch Accessories Kit *Accessory kit includes 1/2" shackle, 9,000 lbs. maximum capacity snatch block, (2) 1"x8' tree trunk protectors, and (1) pair of WARN winching gloves.*	129.47
		SERVICE CONTRACTS - RESIDENTIAL OWNERS/USE	
		Visit http://www.JohnDeere.com/ServicePlans for more information on John Deere Service Contracts. May not be Available in Parts of the U.S., Not Available in Canada. Price may vary due to driving distance and/or time from machine to dealership location.	
		John Deere Extended Service Plan - 2-Year Option *Available for T-Series, HPX and XUV utility vehicles only.)* *2-year extended service plan. (1 year of extended service protection);* *2-years of warranty transportation.*	399.99
		John Deere Extended Service Plan - 3-Year Option *3-year extended service plan. (2 years of extended service protection);* *3-years of warranty transportation.*	569.99

XUV 825i S4 Green & Yellow

Equipment for Base Machine

ENGINE:
50 Engine HP*(812cc),
Electronic Fuel Injection
(EFI)
Three Cylinder, Liquid-cooled,
Dual Overhead Cams,
4-Cycle Gasoline
Full Pressure Lubrication
System
Replaceable Single Dry-Type
Element Air Cleaner with
Remote Intake
7.0 Gallon (26.49L) Fuel
Capacity
Solid-state Ignition (12V)
Spark-arresting Muffler
ELECTRICAL:
Electric Start
75 Amp Alternator
340 CCA Battery
Two 37.5 Watt Halogen
Headlights
Brake and Tail Lights
TRANSAXLE/TRANSMISSION:
Continuously Variable
Transmission
Full Clutch Enclosure
Two-speed Transaxle
Operator Selectable 4WD
44 mph (70 kph) Maximum
Forward Speed
On-demand True Four-Wheel
Drive System
Auto Locking Front Differential
Traction Assist
Front and Rear Hydraulic Disk
Brakes
Hand-operated Sealed Wet Disk
Park brake
1.3 In. (27mm) Forged Rear
Axles
STEERING/SUSPENSION:
Power Steering
Rack and Pinion Steering
Independent Front Suspension
(IRS) with 8 inches (203mm)
of travel
Independent Rear Suspension
(IRS) with 9 inches (228.6mm)
of travel
Integrated 2" Rear Receiver
12.4 ft. Turning Radius
Ground Clearance: 11 In.
(267 mm)
Ground Clearance
(Under Foot Platform):
12.25 In (311 mm)
FRAME/STYLED PARTS:
Hydroform Technology Frame
PC/ASA (JDLOY) Hood and
Fenders
OCCUPANT PROTECTION SYSTEM(OPS):
1.75 In. (44.4 mm) Steel Tubular
Overhead Structure
Multiple Passenger Handholds
3-pt. Seat Belts
SAE J2194 & OSHA ROPS Certified
OPERATOR STATION:
Front and rear bench seats
7 In. (178 mm) Slide Rail
Hip Restraint Bars for Driver
and Passenger
Passenger Grab Handles
Glove Box
Storage Compartment Under Hood
Two Cup Holders
Instrument gauge with 4
wheel-drive indicator, RPM,
MPH/KPH, time of day, fuel
level, total miles and hour
meters
12v DC Outlet
FRONTAL PROTECTION:
Heavy-Duty Front Bumper
Integrated 2 Inch Front Receiver
Hitch
REAR PROTECTION:
Skid Plate and Close Out Panel
DIMENSIONS(WITH OPS):
154 In. Long (3924.3mm) x 62 In.
Wide (1574.8mm) x 75 Inches High
(1905mm)
PAYLOAD CAPACITY:
1,400 Lb (635 kg) Total Payload
Capacity which Includes:
200 Lb (91 kg) Driver,
200 Lb (91 kg) Passenger, and
1000 Lb (454 kg) in Cargo Box
Towing Capacity:
1,500 Lb (680kg)
CARGO BOX:
45 In. Long x 52 In. Wide x
12 In. Deep
(1,143mm x 1321mm x 305mm)
16.4cu. ft (.46 cu.m) Capacity
1000 Lbs (454 kg) Box Capacity
Tilting Box
Hinged (Bottom) Tailgate
Load Guard
TIRES:
Front: 26x9-12 Ancla XT
(Extreme Terrain Tires)
Rear: 26x11-12 Ancla XT
(Extreme Terrain Tires)
SAFETY VIDEO TAPE:
Safety and Operational DVD
Operators Manual
*Engine HP is Provided by the
Engine Manufacturer to be Used
for Comparison Purposes Only,
Actual Operating HP will be
Less.

CODE	ATTACHMENT IDENTIFIER	DESCRIPTION	SUGGESTED LIST PRICE USD ($)

Select One Code From Each Required Category

BASE MACHINE

F.O.B. Janesville, Wisconsin

5880M	XUV 825i S4 Green & Yellow *Base Machine Suggested List Price Does Not Include $500 USD Destination Charge.*	14,199.00

DESTINATION

0202	US/Canada	In Base Price
0195	Mexico	Same Price
0250	All Other Countries	Same Price

XUV 825i S4 Green & Yellow
Continued

CODE	ATTACHMENT IDENTIFIER	DESCRIPTION	SUGGESTED LIST PRICE USD ($)
		DESTINATION Continued...	
		WHEELS WITH TIRES (FOUR)	
1001		Yellow Steel Wheels Ancla M-T Extreme Terrain Tire	In Base Price
		DRIVER SEAT	
2001		Bench Seat - Yellow	Same Price
		DELUXE CARGO BOX	
3000		Deluxe Cargo Box with Paint, Brake, Tail & Reverse Lights	In Base Price
		OVERHEAD PROTECTION STRUCTURES (OPS)	
4000		OPS	In Base Price
		POWER AND FRONT PROTECTION PACKAGE	
5010		Manual Lift *Must order 5010 option code when ordering 6000 option code.*	In Base Price
		REAR PROTECTION PACKAGE	
5110		Less Rear Protection Package	In Base Price
		FRONT BRUSH GUARD	
6010		Less Front Brush Guard *Must order 6010 option code when ordering 5000 option code.*	In Base Price
		MUFFLER	
6100		Standard Muffler	In Base Price
		HOOD RACK	
6310		Less Front Hood Rack XUV *Must order 6310 option code when ordering 4002 option code.*	In Base Price
		Attachments-Order as Desired	
		Spanish North American Kit:	
9435		Spanish North American Operator's Manual and Decal Kit	No Charge
		ATTACHMENTS FOR FIELD CONVERSION	
		Blades:	
	LP25355	Heavy Duty POWERtach Blade - 72" *Available through Order Zone*	In Catalog
	LPPK140	POWERtach Deflector Shield *Available through Order Zone*	In Catalog

XUV 825i S4 Green & Yellow
Continued

CODE	ATTACHMENT IDENTIFIER	DESCRIPTION	SUGGESTED LIST PRICE USD ($)
		ATTACHMENTS FOR FIELD CONVERSION Continued...	
	LPPK120	POWERtach Markers *Available through Order Zone*	In Catalog
	LPPWBK72	POWERtach Poly Wear Bar *Available through Order Zone*	In Catalog
	LPPK150	POWERtach Rubber Squeegee *Available through Order Zone*	In Catalog
	LPPK160	POWERtach Skid Shoes *Available through Order Zone*	In Catalog
		Cabs/Roofs/Windshields:	
	BM23742	OPS Full No-Scratch Windshield *Not compatible with Deluxe Cab Frame. Compatible with poly cab.*	531.79
	BM23741	OPS Full Poly Windshield *Not compatible with Deluxe Cab Frame. Compatible with poly cab.*	423.71
	BM23743	OPS Glass Windshield with Wiper *Not compatible with Deluxe Cab Frame. Compatible with poly cab.*	874.19
	BM23740	OPS Half Poly Windshield *Not compatible with Deluxe Cab Frame.*	339.19
	BM24116	OPS Poly Roof - S4 (Black)	598.13
	BM24561	OPS Rear Panel *Part of the Poly cab, or can be mounted on the OPS alone. Requires full windshield, poly cab doors, and poly roof to complete poly cab.*	502.90
	LP10314	OPS Side Mirror - Left *Available through Order Zone.*	In Catalog
	LP10315	OPS Side Mirror - Right *Available through Order Zone.*	In Catalog
		Cargo Box Options / Storage:	
	BM23849	5 Gallon Pail Holder	38.51
	BM22772	Cargo Box Bed Mat	119.84
	BM22769	Cargo Box Divider	191.53
	BM22811	Cargo Box FenderGuard *Requires Rear Bumper*	191.53
	BM23694	Cargo Box Power Lift Kit	858.14
	BM22774	Cargo Box Side Extension Kit	511.46
	LP19880	Deluxe Cargo Box Cover - Black *Available through Order Zone*	In Catalog
	BM22980	Front Hood Rack *Requires Front Brush Guard.*	241.81

XUV 825i S4 Green & Yellow
Continued

CODE	ATTACHMENT IDENTIFIER	DESCRIPTION	SUGGESTED LIST PRICE USD ($)
		ATTACHMENTS FOR FIELD CONVERSION Continued...	
	LP30320	Fuel Pack *Available through Order Zone*	In Catalog
	LP19878	Gator Gear Organizer - Black *Available through Order Zone*	In Catalog
	LP19886	Gator Tool Box *Contact Dealer for pricing.*	In Catalog
	LP93117	OPS Overhead Organizer - Black *Available through Order Zone*	In Catalog
	LP46485	Ratcheting Rhino Grip *Available through Order Zone.*	In Catalog
	LP25929	Rhino Grip XL - Double *Available through Order Zone.*	In Catalog
	LP25928	Rhino Grip XL - Single *Available through Order Zone.*	In Catalog
	LP19882	Saw Press Bracket *Available through Order Zone*	In Catalog
	BM22775	Side Tool Rack	304.96
	LP93207	Soft Rear Screen and Organizer - Black *Available through Order Zone*	In Catalog
		Carts / Hitches:	
	LPPCT10LXATV	10AT Cart *Available through Order Zone*	In Catalog
	LPPCT17ATJD	17AT Cart *Available through Order Zone.*	In Catalog
	LPUT21JD	21 Steel Utility Cart *Available through Order Zone*	In Catalog
	PM05101	Ball Mount - 1.875 in. (48mm)	See Parts
	PM05201	Ball Mount - 2 in. (51mm)	See Parts
	BM22290	Drawbar - 2 in. (51mm)	38.51
		Custom & High Performance:	
	BM22916	High Performance Slip-On Exhaust	680.51
	BM22703	Seat-Belt Comfort Strap (2) *Also compatible with Deluxe Cab.*	77.04
	BM24455	Stereo Mounting Kit *Includes mounting kit only; must choose one of the following three head units to have complete stereo:* *Radio, Heavy Duty AM / FM / WB / AUX (SWJHD1120)* *Radio, Heavy Duty AM / FM / WB / SAT / I-POD (SWJHD1620)* *Radio, AM / FM / WB / CD / AUX / SAT Ready (SWJHD3620)* *Must order head unit through Parts. Stereo Mounting Kit not compatible with Deluxe Cab.*	660.19

XUV 825i S4 Green & Yellow
Continued

CODE	ATTACHMENT IDENTIFIER	DESCRIPTION	SUGGESTED LIST PRICE USD ($)
		ATTACHMENTS FOR FIELD CONVERSION Continued...	
		Hunting / Camo:	
	LP19884	Cargo Box Gun Mount - Black *Available through Order Zone*	In Catalog
	LP10319	Gun Mount Kit - Overhead *Includes 2 Gun Boot VI.* *Available through Order Zone*	In Catalog
		Lights / Signals:	
	BM24726	Backup Alarm	74.56
	BM24013	Beacon Light *Requires OPS Poly Roof and OPS Switch Bank.*	219.36
	BM24587	Deluxe Signal Light Kit *Includes Turn Signals (Front & Rear) and 4-Way Flashers. Compatible with the 825i and 825i S4 vehicles equipped with the 3000 cargo box option code or 625i, 855D and 855D S4 vehicles equipped with the 3002 Cargo Box option code which already includes the brake & tail lights.*	171.20
	BM23442	Hella HID Sport Driving Lights *Requires OPS Switch Bank for OPS or poly roof mounting, or Front Brushguard for bumper mounting.*	935.19
	BM24108	Hella Performance Spot Lights *Requires OPS Switch Bank for OPS or poly roof mounting, or Front Brushguard for bumper mounting.*	343.47
	BM23370	Horn Kit	97.37
	BM24090	Long Range Light Kit *Can also mount behind front bumper cover directly to frame.* *Requires OPS Switch Bank for OPS or poly roof mounting, or Front Brushguard for brushguard mounting.*	191.53
	BM24016	Mid-Range Light Kit *Requires OPS Switch Bank for OPS or poly roof mounting. Can be installed on the front or rear of OPS or roof.*	123.06
	BM24273	Mid-Range Light Kit (rear S4 Only) *Requires OPS Switch Bank. Compatible with OPS Poly Roofs, or on the OPS alone.*	123.06
	BM24089	OPS Switch Bank *Accommodates up to three separate OPS accessory kits.*	67.41
		Protection:	
	BM24282	Floormat *Also front floormat on S4*	78.11
	BM24283	Floormat (S4 rear)	78.11
	BM24463	Front CV Guards	114.49
	BM22987	Heavy Duty Fender Guard *Compatible with Standard Front Bumper.*	215.07
	BM22841	Heavy Duty Front Brush Guard	249.31
	BM22767	Heavy Duty Rear Bumper	236.47

XUV 825i S4 Green & Yellow
Continued

CODE	ATTACHMENT IDENTIFIER	DESCRIPTION	SUGGESTED LIST PRICE USD ($)
		ATTACHMENTS FOR FIELD CONVERSION Continued...	
	BM22962	Rear CV Guards	114.49
	BM22773	Tail Light Protectors	89.89
		Seats / Wheels / Tires:	
	LP40587	Camoplast Tracks (825i) *Available through Order Zone*	In Catalog
		Sprayers / Pressure Washers:	
	LP33597	25 Gallon Bed Sprayer *Available through Order Zone*	In Catalog
	LP19490	25 Gallon Portable Sprayer *Available through Order Zone*	In Catalog
	LP20852	45 Gallon Bed Sprayer *Available through Order Zone*	In Catalog
	LP22908	45 Gallon High Performance Sprayer *Available through Order Zone*	In Catalog
	LP20485	45 Gallon Tow-Behind Sprayer *Available through Order Zone*	In Catalog
	LP20853	90 Gallon Bed Sprayer *Available through Order Zone*	In Catalog
	LP22909	90 Gallon High Performance Bed Sprayer *Available through Order Zone*	In Catalog
	LPGP2700GH	GatorPal High Pressure Washer (2700 psi, Honda engine) *Contact Dealer for pricing.*	In Catalog
	LPGP2700GS	GatorPal High Pressure Washer (2700 psi, Subaru engine) *Contact Dealer for pricing.*	In Catalog
	LPGP3000GH	GatorPal High Pressure Washer (3000 psi, Honda engine) *Contact Dealer for pricing.*	In Catalog
	LPGP3000GS	GatorPal High Pressure Washer (3000 psi, Subaru engine) *Contact Dealer for pricing.*	In Catalog
	LP22885	HP 150 in. Precision Boom *Compatible with all High Performance Sprayers* *Available through Order Zone*	In Catalog
	LP39963	HP 45 Gallon Sprayer - Tow Behind *Available through Order Zone*	In Catalog
	LP22884	HP Boomless Nozzles *Compatible with all High Performance Sprayers* *Available through Order Zone*	In Catalog
	LP22911	HP Standard Gator Boom *Compatible with all High Performance Sprayers* *Available through Order Zone*	In Catalog

XUV 825i S4 Green & Yellow

Continued

CODE	ATTACHMENT IDENTIFIER	DESCRIPTION	SUGGESTED LIST PRICE USD ($)
		ATTACHMENTS FOR FIELD CONVERSION Continued...	
		Winch:	
	BM24443	Warn® Winch (3000 lb) *Requires RE266640 positive cable and AN305976 ground cable to reach contactor.* *Requires 2-Inch Receiver Multi-Mount Kit for Front or Rear Receiver Mount.*	770.40
	BM23105	Winch - 2 Inch Receiver Multi-Mount Kit	225.77
	BM21392	Winch Accessories Kit *Accessory kit includes 1/2" shackle, 9,000 lbs. maximum capacity snatch block, (2) 1"x8' tree trunk protectors, and (1) pair of WARN winching gloves.*	129.47
		SERVICE CONTRACTS - RESIDENTIAL OWNERS/USE	
		Visit http://www.JohnDeere.com/ServicePlans for more information on John Deere Service Contracts. May not be Available in Parts of the U.S., Not Available in Canada. Price may vary due to driving distance and/or time from machine to dealership location.	
		John Deere Extended Service Plan - 2-Year Option *Available for T-Series, HPX and XUV utility vehicles only.)* *2-year extended service plan. (1 year of extended service protection);* *2-years of warranty transportation.*	399.99
		John Deere Extended Service Plan - 3-Year Option *3-year extended service plan. (2 years of extended service protection);* *3-years of warranty transportation.*	569.99

XUV 825i S4 Camo Utility and Protection PR

Equipment for Base Machine

ENGINE:
50 Engine HP*(812cc),
Electronic Fuel Injection
(EFI)
Three Cylinder, Liquid-cooled,
Dual Overhead Cams,
4-Cycle Gasoline
Full Pressure Lubrication
System
Replaceable Single Dry-Type
Element Air Cleaner with
Remote Intake
7.0 Gallon (26.49L) Fuel
Capacity
Solid-state Ignition (12V)
Spark-arresting Muffler
ELECTRICAL:
Electric Start
75 Amp Alternator
340 CCA Battery
Two 37.5 Watt Halogen
Headlights
Brake and Tail Lights
TRANSAXLE/TRANSMISSION:
Continuously Variable
Transmission
Full Clutch Enclosure
Two-speed Transaxle
Operator Selectable 4WD
44 mph (70 kph) Maximum
Forward Speed
On-demand True Four-Wheel
Drive System
Auto Locking Front Differential
Traction Assist
Front and Rear Hydraulic Disk
Brakes
Hand-operated Sealed Wet Disk
Park brake
1.3 In. (27mm) Forged Rear
Axles
STEERING/SUSPENSION:
Power Steering
Rack and Pinion Steering
Independent Front Suspension
(IRS) with 8 inches (203mm)
of travel
Independent Rear Suspension
(IRS) with 9 inches (228.6mm)
of travel
Integrated 2" Rear Receiver
12.4 ft. Turning Radius
Ground Clearance: 11 In.
(267 mm)
Ground Clearance
(Under Foot Platform):
12.25 In (311 mm)
FRAME/STYLED PARTS:
Hydroform Technology Frame
PC/ASA (JDLOY) Hood and
Fenders
OCCUPANT PROTECTION SYSTEM(OPS):
1.75 In. (44.4 mm) Steel Tubular
Overhead Structure
Multiple Passenger Handholds
3-pt. Seat Belts
SAE J2194 & OSHA ROPS Certified
OPERATOR STATION:
Front and rear bench seats
7 In. (178 mm) Slide Rail
Hip Restraint Bars for Driver
and Passenger
Passenger Grab Handles
Glove Box
Storage Compartment Under Hood
Two Cup Holders
Instrument gauge with 4
wheel-drive indicator, RPM,
MPH/KPH, time of day, fuel
level, total miles and hour
meters
12v DC Outlet
FRONTAL PROTECTION:
Heavy-Duty Front Bumper
Integrated 2 Inch Front Receiver
Hitch
REAR PROTECTION:
Skid Plate and Close Out Panel
DIMENSIONS(WITH OPS):
154 In. Long (3924.3mm) x 62 In.
Wide (1574.8mm) x 75 Inches High
(1905mm)
PAYLOAD CAPACITY:
1,400 Lb (635 kg) Total Payload
Capacity which Includes:
200 Lb (91 kg) Driver,
200 Lb (91 kg) Passenger, and
1000 Lb (454 kg) in Cargo Box
Towing Capacity:
1,500 Lb (680kg)
CARGO BOX:
45 In. Long x 52 In. Wide x
12 In. Deep
(1,143mm x 1321mm x 305mm)
16.4cu. ft (.46 cu.m) Capacity
1000 Lbs (454 kg) Box Capacity
Tilting Box
Hinged (Bottom) Tailgate
Load Guard
TIRES:
Front: 26x9-12 Ancla XT
(Extreme Terrain Tires)
Rear: 26x11-12 Ancla XT
(Extreme Terrain Tires)
SAFETY VIDEO TAPE:
Safety and Operational DVD
Operators Manual
*Engine HP is Provided by the
Engine Manufacturer to be Used
for Comparison Purposes Only,
Actual Operating HP will be
Less.

CODE	ATTACHMENT IDENTIFIER	DESCRIPTION	SUGGESTED LIST PRICE USD ($)

Select One Code From Each Required Category

BASE MACHINE

F.O.B. Janesville, Wisconsin

588BM	XUV 825i S4 Camo Utility and Protection PR *Base Machine Suggested List Price Does Not Include $500 USD Destination Charge.*	14,749.00

DESTINATION

0202	US/Canada	In Base Price
0230	Australia/New Zealand	Same Price

XUV 825i S4 Camo Utility and Protection PR

Continued

CODE	ATTACHMENT IDENTIFIER	DESCRIPTION	SUGGESTED LIST PRICE USD ($)
		WHEELS WITH TIRES (FOUR)	
1002		Black Alloy Wheels Maxxis Bighorn Radial Tires	823.00
		DRIVER SEAT	
2001		Bench Seat - Black	Same Price
		DELUXE CARGO BOX	
3002		Deluxe Cargo Box with Polyurea Liner, Brake, Tail, Reverse Lights & Light Protector	348.00
		OVERHEAD PROTECTION STRUCTURES (OPS)	
4008		OPS with Black Poly Roof	559.00
		POWER AND FRONT PROTECTION PACKAGE	
5000		Power and Front Protection Package Package Consists of: Power Lift, Heavy Duty Front Brushguard, Heavy Duty Front Fender Guard, Front Floor Mats, Rear Floor Mats *Package Priced at 10% discount.*	1,331.00
		REAR PROTECTION PACKAGE	
5100		Rear Protection Package Package Consists of: Rear Bumper, Bed Mat, Cargo Box Heavy Duty Fender Guards *Package Priced at 10% discount.*	494.00
		FRONT BRUSH GUARD	
6010		Less Front Brush Guard *Must order 6010 option code when ordering 5000 option code.*	In Base Price
		MUFFLER	
6100		Standard Muffler	In Base Price
		HOOD RACK	
6310		Less Front Hood Rack XUV *Must order 6310 option code when ordering 4002 option code.*	In Base Price
		ATTACHMENTS FOR FIELD CONVERSION	
		Blades:	
	LP25355	Heavy Duty POWERtach Blade - 72" *Available through Order Zone*	In Catalog
	LPPK140	POWERtach Deflector Shield *Available through Order Zone*	In Catalog
	LPPK120	POWERtach Markers *Available through Order Zone*	In Catalog
	LPPWBK72	POWERtach Poly Wear Bar *Available through Order Zone*	In Catalog

XUV 825i S4 Camo Utility and Protection PR
Continued

CODE	ATTACHMENT IDENTIFIER	DESCRIPTION	SUGGESTED LIST PRICE USD ($)
		ATTACHMENTS FOR FIELD CONVERSION Continued...	
	LPPK150	POWERtach Rubber Squeegee *Available through Order Zone*	In Catalog
	LPPK160	POWERtach Skid Shoes *Available through Order Zone*	In Catalog
		Cabs/Roofs/Windshields:	
	BM23742	OPS Full No-Scratch Windshield *Not compatible with Deluxe Cab Frame. Compatible with poly cab.*	531.79
	BM23741	OPS Full Poly Windshield *Not compatible with Deluxe Cab Frame. Compatible with poly cab.*	423.71
	BM23743	OPS Glass Windshield with Wiper *Not compatible with Deluxe Cab Frame. Compatible with poly cab.*	874.19
	BM23740	OPS Half Poly Windshield *Not compatible with Deluxe Cab Frame.*	339.19
	BM24116	OPS Poly Roof - S4 (Black)	598.13
	BM24561	OPS Rear Panel *Part of the Poly cab, or can be mounted on the OPS alone. Requires full windshield, poly cab doors, and poly roof to complete poly cab.*	502.90
	LP10314	OPS Side Mirror - Left *Available through Order Zone.*	In Catalog
	LP10315	OPS Side Mirror - Right *Available through Order Zone.*	In Catalog
		Cargo Box Options / Storage:	
	BM23849	5 Gallon Pail Holder	38.51
	BM22772	Cargo Box Bed Mat	119.84
	BM22769	Cargo Box Divider	191.53
	BM22811	Cargo Box FenderGuard *Requires Rear Bumper*	191.53
	BM23694	Cargo Box Power Lift Kit	858.14
	BM22774	Cargo Box Side Extension Kit	511.46
	LP19880	Deluxe Cargo Box Cover - Black *Available through Order Zone*	In Catalog
	BM22980	Front Hood Rack *Requires Front Brush Guard.*	241.81
	LP30320	Fuel Pack *Available through Order Zone*	In Catalog
	LP19878	Gator Gear Organizer - Black *Available through Order Zone*	In Catalog

XUV 825i S4 Camo Utility and Protection PR

Continued

CODE	ATTACHMENT IDENTIFIER	DESCRIPTION	SUGGESTED LIST PRICE USD ($)
		ATTACHMENTS FOR FIELD CONVERSION Continued...	
	LP19886	Gator Tool Box *Contact Dealer for pricing.*	In Catalog
	LP93117	OPS Overhead Organizer - Black *Available through Order Zone*	In Catalog
	LP93113	OPS Overhead Organizer - Camo *Available through Order Zone*	In Catalog
	LP46485	Ratcheting Rhino Grip *Available through Order Zone.*	In Catalog
	LP25929	Rhino Grip XL - Double *Available through Order Zone.*	In Catalog
	LP25928	Rhino Grip XL - Single *Available through Order Zone.*	In Catalog
	LP19882	Saw Press Bracket *Available through Order Zone*	In Catalog
	BM22775	Side Tool Rack	304.96
	LP93207	Soft Rear Screen and Organizer - Black *Available through Order Zone*	In Catalog
		Carts / Hitches:	
	LPPCT10LXATV	10AT Cart *Available through Order Zone*	In Catalog
	LPPCT17ATJD	17AT Cart *Available through Order Zone.*	In Catalog
	LPUT21JD	21 Steel Utility Cart *Available through Order Zone*	In Catalog
	PM05101	Ball Mount - 1.875 in. (48mm)	See Parts
	PM05201	Ball Mount - 2 in. (51mm)	See Parts
	BM22290	Drawbar - 2 in. (51mm)	38.51
		Custom & High Performance:	
	BM22916	High Performance Slip-On Exhaust	680.51
	BM22703	Seat-Belt Comfort Strap (2) *Also compatible with Deluxe Cab.*	77.04
	BM24455	Stereo Mounting Kit *Includes mounting kit only; must choose one of the following three head units to have complete stereo:* *Radio, Heavy Duty AM / FM / WB / AUX (SWJHD1120)* *Radio, Heavy Duty AM / FM / WB / SAT / I-POD (SWJHD1620)* *Radio, AM / FM / WB / CD / AUX / SAT Ready (SWJHD3620)* *Must order head unit through Parts. Stereo Mounting Kit not compatible with Deluxe Cab.*	660.19

XUV 825i S4 Camo Utility and Protection PR
Continued

CODE	ATTACHMENT IDENTIFIER	DESCRIPTION	SUGGESTED LIST PRICE USD ($)
		ATTACHMENTS FOR FIELD CONVERSION Continued...	
		Hunting / Camo:	
	LP19884	Cargo Box Gun Mount - Black *Available through Order Zone*	In Catalog
	LP19879	Deluxe Cargo Box Cover- Camo *Available through Order Zone*	In Catalog
	LP19877	Gator Gear Organizer (Camo) *Available through Order Zone*	In Catalog
	LP10319	Gun Mount Kit - Overhead *Includes 2 Gun Boot VI.* *Available through Order Zone*	In Catalog
		Lights / Signals:	
	BM24726	Backup Alarm	74.56
	BM24013	Beacon Light *Requires OPS Poly Roof and OPS Switch Bank.*	219.36
	BM24587	Deluxe Signal Light Kit *Includes Turn Signals (Front & Rear) and 4-Way Flashers. Compatible with the 825i and 825i S4 vehicles equipped with the 3000 cargo box option code or 625i, 855D and 855D S4 vehicles equipped with the 3002 Cargo Box option code which already includes the brake & tail lights.*	171.20
	BM23442	Hella HID Sport Driving Lights *Requires OPS Switch Bank for OPS or poly roof mounting, or Front Brushguard for bumper mounting.*	935.19
	BM24108	Hella Performance Spot Lights *Requires OPS Switch Bank for OPS or poly roof mounting, or Front Brushguard for bumper mounting.*	343.47
	BM23370	Horn Kit	97.37
	BM24090	Long Range Light Kit *Can also mount behind front bumper cover directly to frame.* *Requires OPS Switch Bank for OPS or poly roof mounting, or Front Brushguard for brushguard mounting.*	191.53
	BM24016	Mid-Range Light Kit *Requires OPS Switch Bank for OPS or poly roof mounting. Can be installed on the front or rear of OPS or roof.*	123.06
	BM24273	Mid-Range Light Kit (rear S4 Only) *Requires OPS Switch Bank. Compatible with OPS Poly Roofs, or on the OPS alone.*	123.06
	BM24089	OPS Switch Bank *Accommodates up to three separate OPS accessory kits.*	67.41
		Protection:	
	BM24282	Floormat *Also front floormat on S4*	78.11
	BM24283	Floormat (S4 rear)	78.11
	BM24463	Front CV Guards	114.49

XUV 825i S4 Camo Utility and Protection PR

Continued

CODE	ATTACHMENT IDENTIFIER	DESCRIPTION	SUGGESTED LIST PRICE USD ($)
		ATTACHMENTS FOR FIELD CONVERSION Continued...	
	BM22987	Heavy Duty Fender Guard *Compatible with Standard Front Bumper.*	215.07
	BM22841	Heavy Duty Front Brush Guard	249.31
	BM22767	Heavy Duty Rear Bumper	236.47
	BM22962	Rear CV Guards	114.49
	BM22773	Tail Light Protectors	89.89
		Seats / Wheels / Tires:	
	LP40587	Camoplast Tracks (825i) *Available through Order Zone*	In Catalog
		Sprayers / Pressure Washers:	
	LP33597	25 Gallon Bed Sprayer *Available through Order Zone*	In Catalog
	LP19490	25 Gallon Portable Sprayer *Available through Order Zone*	In Catalog
	LP20852	45 Gallon Bed Sprayer *Available through Order Zone*	In Catalog
	LP22908	45 Gallon High Performance Sprayer *Available through Order Zone*	In Catalog
	LP20485	45 Gallon Tow-Behind Sprayer *Available through Order Zone*	In Catalog
	LP20853	90 Gallon Bed Sprayer *Available through Order Zone*	In Catalog
	LP22909	90 Gallon High Performance Bed Sprayer *Available through Order Zone*	In Catalog
	LPGP2700GH	GatorPal High Pressure Washer (2700 psi, Honda engine) *Contact Dealer for pricing.*	In Catalog
	LPGP2700GS	GatorPal High Pressure Washer (2700 psi, Subaru engine) *Contact Dealer for pricing.*	In Catalog
	LPGP3000GH	GatorPal High Pressure Washer (3000 psi, Honda engine) *Contact Dealer for pricing.*	In Catalog
	LPGP3000GS	GatorPal High Pressure Washer (3000 psi, Subaru engine) *Contact Dealer for pricing.*	In Catalog
	LP22885	HP 150 in. Precision Boom *Compatible with all High Performance Sprayers* *Available through Order Zone*	In Catalog
	LP39963	HP 45 Gallon Sprayer - Tow Behind *Available through Order Zone*	In Catalog

XUV 825i S4 Camo Utility and Protection PR

Continued

CODE	ATTACHMENT IDENTIFIER	DESCRIPTION	SUGGESTED LIST PRICE USD ($)
		ATTACHMENTS FOR FIELD CONVERSION Continued...	
	LP22884	HP Boomless Nozzles *Compatible with all High Performance Sprayers* *Available through Order Zone*	In Catalog
	LP22911	HP Standard Gator Boom *Compatible with all High Performance Sprayers* *Available through Order Zone*	In Catalog
		Winch:	
	BM24443	Warn® Winch (3000 lb) *Requires RE266640 positive cable and AN305976 ground cable to reach contactor.* *Requires 2-Inch Receiver Multi-Mount Kit for Front or Rear Receiver Mount.*	770.40
	BM23105	Winch - 2 Inch Receiver Multi-Mount Kit	225.77
	BM21392	Winch Accessories Kit *Accessory kit includes 1/2" shackle, 9,000 lbs. maximum capacity snatch block, (2) 1"x8' tree trunk protectors, and (1) pair of WARN winching gloves.*	129.47
		SERVICE CONTRACTS - RESIDENTIAL OWNERS/USE	
		Visit http://www.JohnDeere.com/ServicePlans for more information on John Deere Service Contracts. May not be Available in Parts of the U.S., Not Available in Canada. Price may vary due to driving distance and/or time from machine to dealership location.	
		John Deere Extended Service Plan - 2-Year Option *Available for T-Series, HPX and XUV utility vehicles only.)* *2-year extended service plan. (1 year of extended service protection);* *2-years of warranty transportation.*	399.99
		John Deere Extended Service Plan - 3-Year Option *3-year extended service plan. (2 years of extended service protection);* *3-years of warranty transportation.*	569.99

XUV 825i S4 Camo

Equipment for Base Machine

ENGINE:
50 Engine HP*(812cc),
Electronic Fuel Injection
(EFI)
Three Cylinder, Liquid-cooled,
Dual Overhead Cams,
4-Cycle Gasoline
Full Pressure Lubrication
System
Replaceable Single Dry-Type
Element Air Cleaner with
Remote Intake
7.0 Gallon (26.49L) Fuel
Capacity
Solid-state Ignition (12V)
Spark-arresting Muffler
ELECTRICAL:
Electric Start
75 Amp Alternator
340 CCA Battery
Two 37.5 Watt Halogen
Headlights
Brake and Tail Lights
TRANSAXLE/TRANSMISSION:
Continuously Variable
Transmission
Full Clutch Enclosure
Two-speed Transaxle
Operator Selectable 4WD
44 mph (70 kph) Maximum
Forward Speed
On-demand True Four-Wheel
Drive System
Auto Locking Front Differential
Traction Assist
Front and Rear Hydraulic Disk
Brakes
Hand-operated Sealed Wet Disk
Park brake
1.3 In. (27mm) Forged Rear
Axles
STEERING/SUSPENSION:
Power Steering
Rack and Pinion Steering
Independent Front Suspension
(IRS) with 8 inches (203mm)
of travel
Independent Rear Suspension
(IRS) with 9 inches (228.6mm)
of travel
Integrated 2" Rear Receiver
12.4 ft. Turning Radius
Ground Clearance: 11 In.
(267 mm)
Ground Clearance
(Under Foot Platform):
12.25 In (311 mm)
FRAME/STYLED PARTS:
Hydroform Technology Frame
PC/ASA (JDLOY) Hood and
Fenders
OCCUPANT PROTECTION SYSTEM(OPS):
1.75 In. (44.4 mm) Steel Tubular
Overhead Structure
Multiple Passenger Handholds
3-pt. Seat Belts
SAE J2194 & OSHA ROPS Certified
OPERATOR STATION:
Front and rear bench seats
7 In. (178 mm) Slide Rail
Hip Restraint Bars for Driver
and Passenger
Passenger Grab Handles
Glove Box
Storage Compartment Under Hood
Two Cup Holders
Instrument gauge with 4
wheel-drive indicator, RPM,
MPH/KPH, time of day, fuel
level, total miles and hour
meters
12v DC Outlet
FRONTAL PROTECTION:
Heavy-Duty Front Bumper
Integrated 2 Inch Front Receiver
Hitch
REAR PROTECTION:
Skid Plate and Close Out Panel
DIMENSIONS(WITH OPS):
154 In. Long (3924.3mm) x 62 In.
Wide (1574.8mm) x 75 Inches High
(1905mm)
PAYLOAD CAPACITY:
1,400 Lb (635 kg) Total Payload
Capacity which Includes:
200 Lb (91 kg) Driver,
200 Lb (91 kg) Passenger, and
1000 Lb (454 kg) in Cargo Box
Towing Capacity:
1,500 Lb (680kg)
CARGO BOX:
45 In. Long x 52 In. Wide x
12 In. Deep
(1,143mm x 1321mm x 305mm)
16.4cu. ft (.46 cu.m) Capacity
1000 Lbs (454 kg) Box Capacity
Tilting Box
Hinged (Bottom) Tailgate
Load Guard
TIRES:
Front: 26x9-12 Ancla XT
(Extreme Terrain Tires)
Rear: 26x11-12 Ancla XT
(Extreme Terrain Tires)
SAFETY VIDEO TAPE:
Safety and Operational DVD
Operators Manual
*Engine HP is Provided by the
Engine Manufacturer to be Used
for Comparison Purposes Only,
Actual Operating HP will be
Less.

CODE	ATTACHMENT IDENTIFIER	DESCRIPTION	SUGGESTED LIST PRICE USD ($)

Select One Code From Each Required Category

BASE MACHINE

F.O.B. Janesville, Wisconsin

5881M	XUV 825i S4 Camo *Base Machine Suggested List Price Does Not Include $500 USD Destination Charge.*	14,749.00

DESTINATION

0202	US/Canada	In Base Price
0195	Mexico	Same Price
0250	All Other Countries	Same Price

XUV 825i S4 Camo
Continued

CODE	ATTACHMENT IDENTIFIER	DESCRIPTION	SUGGESTED LIST PRICE USD ($)
		DESTINATION Continued...	
		WHEELS WITH TIRES (FOUR)	
1001		Black Steel Wheels Ancla M-T Extreme Terrain Tire	In Base Price
		DRIVER SEAT	
2001		Bench Seat - Black	Same Price
		DELUXE CARGO BOX	
3000		Deluxe Cargo Box with Paint, Brake, Tail & Reverse Lights	In Base Price
		OVERHEAD PROTECTION STRUCTURES (OPS)	
4000		OPS	In Base Price
		POWER AND FRONT PROTECTION PACKAGE	
5010		Manual Lift *Must order 5010 option code when ordering 6000 option code.*	In Base Price
		REAR PROTECTION PACKAGE	
5110		Less Rear Protection Package	In Base Price
		FRONT BRUSH GUARD	
6010		Less Front Brush Guard *Must order 6010 option code when ordering 5000 option code.*	In Base Price
		MUFFLER	
6100		Standard Muffler	In Base Price
		HOOD RACK	
6310		Less Front Hood Rack XUV *Must order 6310 option code when ordering 4002 option code.*	In Base Price
		Attachments-Order as Desired	
		Spanish North American Kit:	
9435		Spanish North American Operator's Manual and Decal Kit	No Charge
		ATTACHMENTS FOR FIELD CONVERSION	
		Blades:	
	LP25355	Heavy Duty POWERtach Blade - 72" *Available through Order Zone*	In Catalog
	LPPK140	POWERtach Deflector Shield *Available through Order Zone*	In Catalog

XUV 825i S4 Camo
Continued

CODE	ATTACHMENT IDENTIFIER	DESCRIPTION	SUGGESTED LIST PRICE USD ($)
		ATTACHMENTS FOR FIELD CONVERSION Continued...	
	LPPK120	POWERtach Markers *Available through Order Zone*	In Catalog
	LPPWBK72	POWERtach Poly Wear Bar *Available through Order Zone*	In Catalog
	LPPK150	POWERtach Rubber Squeegee *Available through Order Zone*	In Catalog
	LPPK160	POWERtach Skid Shoes *Available through Order Zone*	In Catalog
		Cabs/Roofs/Windshields:	
	BM23742	OPS Full No-Scratch Windshield *Not compatible with Deluxe Cab Frame. Compatible with poly cab.*	531.79
	BM23741	OPS Full Poly Windshield *Not compatible with Deluxe Cab Frame. Compatible with poly cab.*	423.71
	BM23743	OPS Glass Windshield with Wiper *Not compatible with Deluxe Cab Frame. Compatible with poly cab.*	874.19
	BM23740	OPS Half Poly Windshield *Not compatible with Deluxe Cab Frame.*	339.19
	BM24116	OPS Poly Roof - S4 (Black)	598.13
	BM24561	OPS Rear Panel *Part of the Poly cab, or can be mounted on the OPS alone. Requires full windshield, poly cab doors, and poly roof to complete poly cab.*	502.90
	LP10314	OPS Side Mirror - Left *Available through Order Zone.*	In Catalog
	LP10315	OPS Side Mirror - Right *Available through Order Zone.*	In Catalog
		Cargo Box Options / Storage:	
	BM23849	5 Gallon Pail Holder	38.51
	BM22772	Cargo Box Bed Mat	119.84
	BM22769	Cargo Box Divider	191.53
	BM22811	Cargo Box FenderGuard *Requires Rear Bumper*	191.53
	BM23694	Cargo Box Power Lift Kit	858.14
	BM22774	Cargo Box Side Extension Kit	511.46
	LP19880	Deluxe Cargo Box Cover - Black *Available through Order Zone*	In Catalog
	BM22980	Front Hood Rack *Requires Front Brush Guard.*	241.81

XUV 825i S4 Camo
Continued

CODE	ATTACHMENT IDENTIFIER	DESCRIPTION	SUGGESTED LIST PRICE USD ($)
		ATTACHMENTS FOR FIELD CONVERSION Continued...	
	LP30320	Fuel Pack *Available through Order Zone*	In Catalog
	LP19878	Gator Gear Organizer - Black *Available through Order Zone*	In Catalog
	LP19886	Gator Tool Box *Contact Dealer for pricing.*	In Catalog
	LP93117	OPS Overhead Organizer - Black *Available through Order Zone*	In Catalog
	LP93113	OPS Overhead Organizer - Camo *Available through Order Zone*	In Catalog
	LP46485	Ratcheting Rhino Grip *Available through Order Zone.*	In Catalog
	LP25929	Rhino Grip XL - Double *Available through Order Zone.*	In Catalog
	LP25928	Rhino Grip XL - Single *Available through Order Zone.*	In Catalog
	LP19882	Saw Press Bracket *Available through Order Zone*	In Catalog
	BM22775	Side Tool Rack	304.96
	LP93207	Soft Rear Screen and Organizer - Black *Available through Order Zone*	In Catalog
		Carts / Hitches:	
	LPPCT10LXATV	10AT Cart *Available through Order Zone*	In Catalog
	LPPCT17ATJD	17AT Cart *Available through Order Zone.*	In Catalog
	LPUT21JD	21 Steel Utility Cart *Available through Order Zone*	In Catalog
	PM05101	Ball Mount - 1.875 in. (48mm)	See Parts
	PM05201	Ball Mount - 2 in. (51mm)	See Parts
	BM22290	Drawbar - 2 in. (51mm)	38.51
		Custom & High Performance:	
	BM22916	High Performance Slip-On Exhaust	680.51
	BM22703	Seat-Belt Comfort Strap (2) *Also compatible with Deluxe Cab.*	77.04

XUV 825i S4 Camo
Continued

CODE	ATTACHMENT IDENTIFIER	DESCRIPTION	SUGGESTED LIST PRICE USD ($)
		ATTACHMENTS FOR FIELD CONVERSION Continued...	
	BM24455	Stereo Mounting Kit *Includes mounting kit only; must choose one of the following three head units to have complete stereo:* *Radio, Heavy Duty AM / FM / WB / AUX (SWJHD1120)* *Radio, Heavy Duty AM / FM / WB / SAT / I-POD (SWJHD1620)* *Radio, AM / FM / WB / CD / AUX / SAT Ready (SWJHD3620)* *Must order head unit through Parts. Stereo Mounting Kit not compatible with Deluxe Cab.*	660.19
		Hunting / Camo:	
	LP19884	Cargo Box Gun Mount - Black *Available through Order Zone*	In Catalog
	LP19879	Deluxe Cargo Box Cover- Camo *Available through Order Zone*	In Catalog
	LP19877	Gator Gear Organizer (Camo) *Available through Order Zone*	In Catalog
	LP10319	Gun Mount Kit - Overhead *Includes 2 Gun Boot VI.* *Available through Order Zone*	In Catalog
		Lights / Signals:	
	BM24726	Backup Alarm	74.56
	BM24013	Beacon Light *Requires OPS Poly Roof and OPS Switch Bank.*	219.36
	BM24587	Deluxe Signal Light Kit *Includes Turn Signals (Front & Rear) and 4-Way Flashers. Compatible with the 825i and 825i S4 vehicles equipped with the 3000 cargo box option code or 625i, 855D and 855D S4 vehicles equipped with the 3002 Cargo Box option code which already includes the brake & tail lights.*	171.20
	BM23442	Hella HID Sport Driving Lights *Requires OPS Switch Bank for OPS or poly roof mounting, or Front Brushguard for bumper mounting.*	935.19
	BM24108	Hella Performance Spot Lights *Requires OPS Switch Bank for OPS or poly roof mounting, or Front Brushguard for bumper mounting.*	343.47
	BM23370	Horn Kit	97.37
	BM24090	Long Range Light Kit *Can also mount behind front bumper cover directly to frame.* *Requires OPS Switch Bank for OPS or poly roof mounting, or Front Brushguard for brushguard mounting.*	191.53
	BM24016	Mid-Range Light Kit *Requires OPS Switch Bank for OPS or poly roof mounting. Can be installed on the front or rear of OPS or roof.*	123.06
	BM24273	Mid-Range Light Kit (rear S4 Only) *Requires OPS Switch Bank. Compatible with OPS Poly Roofs, or on the OPS alone.*	123.06
	BM24089	OPS Switch Bank *Accommodates up to three separate OPS accessory kits.*	67.41
		Protection:	

XUV 825i S4 Camo
Continued

CODE	ATTACHMENT IDENTIFIER	DESCRIPTION	SUGGESTED LIST PRICE USD ($)
		ATTACHMENTS FOR FIELD CONVERSION Continued...	
	BM24282	Floormat *Also front floormat on S4*	78.11
	BM24283	Floormat (S4 rear)	78.11
	BM24463	Front CV Guards	114.49
	BM22987	Heavy Duty Fender Guard *Compatible with Standard Front Bumper.*	215.07
	BM22841	Heavy Duty Front Brush Guard	249.31
	BM22767	Heavy Duty Rear Bumper	236.47
	BM22962	Rear CV Guards	114.49
	BM22773	Tail Light Protectors	89.89
		Seats / Wheels / Tires:	
	LP40587	Camoplast Tracks (825i) *Available through Order Zone*	In Catalog
		Sprayers / Pressure Washers:	
	LP33597	25 Gallon Bed Sprayer *Available through Order Zone*	In Catalog
	LP19490	25 Gallon Portable Sprayer *Available through Order Zone*	In Catalog
	LP20852	45 Gallon Bed Sprayer *Available through Order Zone*	In Catalog
	LP22908	45 Gallon High Performance Sprayer *Available through Order Zone*	In Catalog
	LP20485	45 Gallon Tow-Behind Sprayer *Available through Order Zone*	In Catalog
	LP20853	90 Gallon Bed Sprayer *Available through Order Zone*	In Catalog
	LP22909	90 Gallon High Performance Bed Sprayer *Available through Order Zone*	In Catalog
	LPGP2700GH	GatorPal High Pressure Washer (2700 psi, Honda engine) *Contact Dealer for pricing.*	In Catalog
	LPGP2700GS	GatorPal High Pressure Washer (2700 psi, Subaru engine) *Contact Dealer for pricing.*	In Catalog
	LPGP3000GH	GatorPal High Pressure Washer (3000 psi, Honda engine) *Contact Dealer for pricing.*	In Catalog
	LPGP3000GS	GatorPal High Pressure Washer (3000 psi, Subaru engine) *Contact Dealer for pricing.*	In Catalog

XUV 825i S4 Camo

Continued

CODE	ATTACHMENT IDENTIFIER	DESCRIPTION	SUGGESTED LIST PRICE USD ($)
		ATTACHMENTS FOR FIELD CONVERSION Continued...	
	LP22885	HP 150 in. Precision Boom *Compatible with all High Performance Sprayers* *Available through Order Zone*	In Catalog
	LP39963	HP 45 Gallon Sprayer - Tow Behind *Available through Order Zone*	In Catalog
	LP22884	HP Boomless Nozzles *Compatible with all High Performance Sprayers* *Available through Order Zone*	In Catalog
	LP22911	HP Standard Gator Boom *Compatible with all High Performance Sprayers* *Available through Order Zone*	In Catalog
		Winch:	
	BM24443	Warn® Winch (3000 lb) *Requires RE266640 positive cable and AN305976 ground cable to reach contactor.* *Requires 2-Inch Receiver Multi-Mount Kit for Front or Rear Receiver Mount.*	770.40
	BM23105	Winch - 2 Inch Receiver Multi-Mount Kit	225.77
	BM21392	Winch Accessories Kit *Accessory kit includes 1/2" shackle, 9,000 lbs. maximum capacity snatch block, (2) 1"x8' tree trunk protectors, and (1) pair of WARN winching gloves.*	129.47
		SERVICE CONTRACTS - RESIDENTIAL OWNERS/USE	
		Visit http://www.JohnDeere.com/ServicePlans for more information on John Deere Service Contracts. May not be Available in Parts of the U.S., Not Available in Canada. Price may vary due to driving distance and/or time from machine to dealership location.	
		John Deere Extended Service Plan - 2-Year Option *Available for T-Series, HPX and XUV utility vehicles only.)* *2-year extended service plan. (1 year of extended service protection);* *2-years of warranty transportation.*	399.99
		John Deere Extended Service Plan - 3-Year Option *3-year extended service plan. (2 years of extended service protection);* *3-years of warranty transportation.*	569.99

XUV 855D Green & Yellow

Equipment for Base Machine

ENGINE:
22.8 Engine HP*(854cc),
Three Cylinder, Liquid-cooled,
Overhead Valves
4-Cycle Diesel
Full Pressure Lubrication
System
Replaceable Single Dry-Type
Element Air Cleaner with
Remote Intake
7.0 Gallon (26.49L) Fuel
Capacity
Solid-state Ignition (12V)
Spark-arresting Muffler
ELECTRICAL:
Electric Start
55 Amp 3-Phase Alternator
480 CCA Battery
Two 37.5 Watt Halogen
Headlights
TRANSAXLE/TRANSMISSION:
Continuously Variable
Transmission
Full Clutch Enclosure
Two-speed Transaxle
Operator Selectable 4WD
32 mph (51 kph) Maximum
Forward Speed
On-demand True Four-Wheel
Drive System
Auto Locking Front Differential
Traction Assist
Front and Rear Hydraulic Disk
Brakes
Hand-operated Sealed Wet Disk
Park brake
1.3 In. (27mm) Forged Rear
Axles
STEERING/SUSPENSION:
Rack and Pinion Steering
Independent Front Suspension
(IRS) with 8 inches (203mm)
of travel
Independent Rear Suspension
(IRS) with 9 inches (228.6mm)
of travel
Integrated 2" Rear Receiver
12.4 ft. Turning Radius
Ground Clearance: 11 In.
(267 mm)
Ground Clearance
(Under Foot Platform):
12.25 In (311 mm)
FRAME/STYLED PARTS:
Hydroform Technology Frame
PC/ASA (JDLOY) Hood and
Fenders
OCCUPANT PROTECTION SYSTEM(OPS):
1.75 In. (44.4 mm) Steel Tubular
Overhead Structure
Multiple Passenger Handholds
3-pt. Seat Belts
SAE J2194 & OSHA ROPS Certified
OPERATOR STATION:
High-back Bucket Seats
7 In. (178 mm) Slide Rail
Adjustment on Driver's Seat
Hip Restraint Bars for Driver
and Passenger
Passenger Grab Handles
Glove Box
Storage Compartment Under Hood
Two Cup Holders
Instrument gauge with 4
wheel-drive indicator, RPM,
MPH/KPH, time of day, fuel
level, total miles and hour
meters
12v DC Outlet
FRONTAL PROTECTION:
Heavy-Duty Front Bumper
Integrated 2 Inch Front Receiver
Hitch
REAR PROTECTION:
Engine carrier close ut panel
DIMENSIONS(WITH OPS):
116 In. Long x 62 In.
Wide x 75 Inches High
PAYLOAD CAPACITY:
1,400 Lb (635 kg) Total Payload
Capacity which Includes:
200 Lb (91 kg) Driver,
200 Lb (91 kg) Passenger, and
1000 Lb (454 kg) in Cargo Box
Towing Capacity:
1,500 Lb (680kg)
CARGO BOX:
45 In. Long x 52 In. Wide x
12 In. Deep
(1,143mm x 1321mm x 305mm)
16.4cu. ft (.46 cu.m) Capacity
1000 Lbs (454 kg) Box Capacity
Tilting Box
Hinged (Bottom) Tailgate
Load Guard
TIRES:
Front: 26x9-12 Ancla XT
(Extreme Terrain Tires)
Rear: 26x11-12 Ancla XT
(Extreme Terrain Tires)
SAFETY VIDEO TAPE:
Safety and Operational DVD
Operators Manual
*Engine HP is Provided by the
Engine Manufacturer to be Used
for Comparison Purposes Only,
Actual Operating HP will be
Less.

CODE	ATTACHMENT IDENTIFIER	DESCRIPTION	SUGGESTED LIST PRICE USD ($)

Select One Code From Each Required Category

BASE MACHINE

F.O.B. Janesville, Wisconsin

398FM	XUV 855D Green & Yellow *Base Machine Suggested List Price Does Not Include $400 USD Destination Charge.*	12,599.00

DESTINATION

0202	US/Canada	In Base Price
0230	Australia/New Zealand	Same Price
0195	Mexico	Same Price

XUV 855D Green & Yellow
Continued

CODE	ATTACHMENT IDENTIFIER	DESCRIPTION	SUGGESTED LIST PRICE USD ($)
		DESTINATION Continued...	
0250		All Other Countries	Same Price
0179		Europe	312.00
		WHEELS WITH TIRES (FOUR)	
1000		Yellow Steel Wheels Terra Hawk All Terrain Tires	Same Price
1001		Yellow Steel Wheels Ancla M-T Extreme Terrain Tire	In Base Price
1002		Yellow Alloy Wheels Maxxis Bighorn Radial Tires	823.00
		DRIVER SEAT	
2000		21 In. Standard XUV HB Seat - Yellow	In Base Price
2001		Bench Seat - Yellow	Same Price
2002		High Performance Sport Seat - Black	296.00
		DELUXE CARGO BOX	
3000		Deluxe Cargo Box - with Paint	In Base Price
3001		Deluxe Cargo Box - with Polyurea	264.00
3002		Deluxe Cargo Box with Polyurea Liner, Brake, Tail, Reverse Lights & Light Protector	496.00
		OVERHEAD PROTECTION STRUCTURES (OPS)	
4000		OPS	In Base Price
4002		Deluxe Cab Frame/Including Windshield, Wiper, Electrical Kit and Rear Window	2,368.00
4008		OPS with Black Poly Roof	416.00
		POWER AND FRONT PROTECTION PACKAGE	
5000		Power and Front Protection Package Package Consists of: Power Lift, Heavy Duty Front Brushguard, Heavy Duty Front Fender Guard, Floor Mats *Package Priced at 10% discount.*	1,261.00
5010		Manual Lift *Must order 5010 option code when ordering 6000 option code.*	In Base Price
		REAR PROTECTION PACKAGE	
5100		Rear Protection Package Package Consists of: Rear Bumper, Bed Mat, Cargo Box Heavy Duty Fender Guards *Package Priced at 10% discount.*	494.00
5110		Less Rear Protection Package	In Base Price
		FRONT BRUSH GUARD	
6000		Heavy Duty Front Brushguard	233.00

XUV 855D Green & Yellow
Continued

CODE	ATTACHMENT IDENTIFIER	DESCRIPTION	SUGGESTED LIST PRICE USD ($)
		FRONT BRUSH GUARD Continued...	
6010		Less Front Brush Guard *Must order 6010 option code when ordering 5000 option code.*	In Base Price
		HOOD RACK	
6300		Front Hood Rack XUV *Must order 5000 or 6000 option code when ordering 6300 option code.*	226.00
6310		Less Front Hood Rack XUV *Must order 6310 option code when ordering 4002 option code.*	In Base Price
		Attachments-Order as Desired	
		Spanish North American Kit:	
9435		Spanish North American Operator's Manual and Decal Kit	No Charge
		ATTACHMENTS FOR FIELD CONVERSION	
		Blades:	
	LP25355	Heavy Duty POWERtach Blade - 72" *Available through Order Zone*	In Catalog
	LPPK140	POWERtach Deflector Shield *Available through Order Zone*	In Catalog
	LPPK120	POWERtach Markers *Available through Order Zone*	In Catalog
	LPPWBK72	POWERtach Poly Wear Bar *Available through Order Zone*	In Catalog
	LPPK150	POWERtach Rubber Squeegee *Available through Order Zone*	In Catalog
	LPPK160	POWERtach Skid Shoes *Available through Order Zone*	In Catalog
		Cabs/Roofs/Windshields:	
	BM23638	Air Cleaner Relocation Kit (Diesel) *Quiet Cab Kit for Deluxe Cab. Requires Noise Reduction Kit. Can also be used with Poly Cab for noise reduction.*	61.37
	BM23608	Cab Heater *Requires Cab Heater Fitting Kit.*	1,130.99
	VGB10548	Cab Heater Fitting Kit	23.54
	BM23498	Deluxe Cab Frame *Requires Seat Belt Kit, Glass Door Kit, Glass Windshield with Wiper, and Rear Window Kit to complete full Deluxe Cab.*	1,443.43
	VGB10505	Electrical Kit *Required for field installed Deluxe cabs.*	94.16
	BM24560	Glass Door Kit - Deluxe Cab	2,427.83

XUV 855D Green & Yellow
Continued

CODE	ATTACHMENT IDENTIFIER	DESCRIPTION	SUGGESTED LIST PRICE USD ($)
		ATTACHMENTS FOR FIELD CONVERSION Continued...	
	BM23507	Glass Windshield with Wiper - Deluxe Cab	874.19
	BM21656	Interior Light Kit - Deluxe Cab *Requires Electrical Kit.*	58.86
	BM23750	Noise Reduction Kit (Gas & Diesel) *Quiet Cab Kit for Deluxe Cab. Requires Air Cleaner Relocation Kit.*	373.43
	BM23742	OPS Full No-Scratch Windshield *Not compatible with Deluxe Cab Frame. Compatible with poly cab.*	531.79
	BM23741	OPS Full Poly Windshield *Not compatible with Deluxe Cab Frame. Compatible with poly cab.*	423.71
	BM23743	OPS Glass Windshield with Wiper *Not compatible with Deluxe Cab Frame. Compatible with poly cab.*	874.19
	BM23740	OPS Half Poly Windshield *Not compatible with Deluxe Cab Frame.*	339.19
	BM24115	OPS Poly Roof - Black	445.11
	BM24561	OPS Rear Panel *Part of the Poly cab, or can be mounted on the OPS alone. Requires full windshield, poly cab doors, and poly roof to complete poly cab.*	502.90
	LP10314	OPS Side Mirror - Left *Available through Order Zone.*	In Catalog
	LP10315	OPS Side Mirror - Right *Available through Order Zone.*	In Catalog
	LP93127	OPS Soft Roof - Black *Available through Order Zone*	In Catalog
	BM24117	Poly Cab Doors *Includes left and right doors, with side mirrors. Requires full windshield, OPS rear panel, and poly roof to complete poly cab.*	2,675.00
	BM23505	Rear Window Kit - Deluxe Cab	225.77
	BM23755	Seat Belt Kit *Required with Deluxe Cab Frame*	144.46
	BM23508	Side Mirrors - Deluxe Cab	129.47
	BM21646	Visor (1) Kit - Deluxe cab	70.61
	BM23534	Windshield Washer Fluid Kit - Deluxe Cab *Requires Electrical Kit.*	173.34
		Cargo Box Options / Storage:	
	BM23849	5 Gallon Pail Holder	38.51
	BM22772	Cargo Box Bed Mat	119.84
	BM22769	Cargo Box Divider	191.53

XUV 855D Green & Yellow
Continued

CODE	ATTACHMENT IDENTIFIER	DESCRIPTION	SUGGESTED LIST PRICE USD ($)
		ATTACHMENTS FOR FIELD CONVERSION Continued...	
	BM22811	Cargo Box FenderGuard *Requires Rear Bumper*	191.53
	BM23694	Cargo Box Power Lift Kit	858.14
	BM22774	Cargo Box Side Extension Kit	511.46
	LP19880	Deluxe Cargo Box Cover - Black *Available through Order Zone*	In Catalog
	BM22980	Front Hood Rack *Requires Front Brush Guard.*	241.81
	LP30320	Fuel Pack *Available through Order Zone*	In Catalog
	LP19878	Gator Gear Organizer - Black *Available through Order Zone*	In Catalog
	LP19886	Gator Tool Box *Contact Dealer for pricing.*	In Catalog
	LP93117	OPS Overhead Organizer - Black *Available through Order Zone*	In Catalog
	LP46485	Ratcheting Rhino Grip *Available through Order Zone.*	In Catalog
	LP25929	Rhino Grip XL - Double *Available through Order Zone.*	In Catalog
	LP25928	Rhino Grip XL - Single *Available through Order Zone.*	In Catalog
	LP19882	Saw Press Bracket *Available through Order Zone*	In Catalog
	BM22775	Side Tool Rack	304.96
	LP93207	Soft Rear Screen and Organizer - Black *Available through Order Zone*	In Catalog
		Carts / Hitches:	
	LPPCT10LXATV	10AT Cart *Available through Order Zone*	In Catalog
	LPPCT17ATJD	17AT Cart *Available through Order Zone.*	In Catalog
	LPUT21JD	21 Steel Utility Cart *Available through Order Zone*	In Catalog
	PM05101	Ball Mount - 1.875 in. (48mm)	See Parts
	PM05201	Ball Mount - 2 in. (51mm)	See Parts
	BM22290	Drawbar - 2 in. (51mm)	38.51

XUV 855D Green & Yellow
Continued

CODE	ATTACHMENT IDENTIFIER	DESCRIPTION	SUGGESTED LIST PRICE USD ($)
		ATTACHMENTS FOR FIELD CONVERSION Continued...	
		Custom & High Performance:	
	BM24021	Fox ® High Performance Racing Shox	1,758.01
	BM22703	Seat-Belt Comfort Strap (2) *Also compatible with Deluxe Cab.*	77.04
	BM24453	Stereo Mounting Kit *Includes mounting kit only; must choose one of the following three head units to have complete stereo:* *Radio, Heavy Duty AM / FM / WB / AUX (SWJHD1120)* *Radio, Heavy Duty AM / FM / WB / SAT / I-POD (SWJHD1620)* *Radio, AM / FM / WB / CD / AUX / SAT Ready (SWJHD3620)* *Must order head unit through Parts. Stereo Mounting Kit not compatible with Deluxe Cab.*	521.09
		Engine:	
	AM882530	Adaptor Parts for Engine Coolant Heater	See Parts
	AR87167	Engine Coolant Heater (110 Volt) *Requires adapter parts for engine coolant heater. Requires AM134805 Engine Block Heater Adapter.*	See Parts
		Hunting / Camo:	
	LP19884	Cargo Box Gun Mount - Black *Available through Order Zone*	In Catalog
	LP10319	Gun Mount Kit - Overhead *Includes 2 Gun Boot VI.* *Available through Order Zone*	In Catalog
	LP93103	Vehicle Cover, Cab / ROPS - Camo *Fits all Models Equipped with OPS and Deluxe Cab Structure.* *Available through Order Zone*	In Catalog
		Lights / Signals:	
	BM24726	Backup Alarm	74.56
	BM24013	Beacon Light *Requires OPS Poly Roof and OPS Switch Bank.*	219.36
	BM21649	Beacon Light Kit - Deluxe Cab *Requires Electrical Kit.*	371.29
	BM24591	Brake / Tail Light Kit	160.50
	BM24586	Deluxe Signal Light Kit *Includes Turn Signals (Front & Rear), 4-Way Flashers, Brake, Tail & Reverse Lights.*	374.50
	BM24587	Deluxe Signal Light Kit *Includes Turn Signals (Front & Rear) and 4-Way Flashers. Compatible with the 825i and 825i S4 vehicles equipped with the 3000 cargo box option code or 625i, 855D and 855D S4 vehicles equipped with the 3002 Cargo Box option code which already includes the brake & tail lights.*	171.20
	BM21651	Front Light Kit - Deluxe Cab *Requires Electrical Kit.*	293.19
	BM23442	Hella HID Sport Driving Lights *Requires OPS Switch Bank for OPS or poly roof mounting, or Front Brushguard for bumper mounting.*	935.19

XUV 855D Green & Yellow
Continued

CODE	ATTACHMENT IDENTIFIER	DESCRIPTION	SUGGESTED LIST PRICE USD ($)
		ATTACHMENTS FOR FIELD CONVERSION Continued...	
	BM24108	Hella Performance Spot Lights *Requires OPS Switch Bank for OPS or poly roof mounting, or Front Brushguard for bumper mounting.*	343.47
	BM23370	Horn Kit	97.37
	BM24090	Long Range Light Kit *Can also mount behind front bumper cover directly to frame.* *Requires OPS Switch Bank for OPS or poly roof mounting, or Front Brushguard for brushguard mounting.*	191.53
	BM24016	Mid-Range Light Kit *Requires OPS Switch Bank for OPS or poly roof mounting. Can be installed on the front or rear of OPS or roof.*	123.06
	BM24089	OPS Switch Bank *Accommodates up to three separate OPS accessory kits.*	67.41
	BM21652	Rear Light Kit - Deluxe Cab *Requires Electrical Kit.*	217.21
		Protection:	
	BM23727	Deflector Plate	55.64
	BM24282	Floormat *Also front floormat on S4*	78.11
	BM24463	Front CV Guards	114.49
	BM22987	Heavy Duty Fender Guard *Compatible with Standard Front Bumper.*	215.07
	BM22841	Heavy Duty Front Brush Guard	249.31
	BM22767	Heavy Duty Rear Bumper	236.47
	BM22962	Rear CV Guards	114.49
	BM22773	Tail Light Protectors	89.89
	LP93107	Vehicle Cover, Cab / ROPS - Black *Available through Order Zone.*	In Catalog
		Seats / Wheels / Tires:	
	LP40897	Camoplast Tracks (855D) *Available through Order Zone*	In Catalog
		Sprayers / Pressure Washers:	
	LP33597	25 Gallon Bed Sprayer *Available through Order Zone*	In Catalog
	LP19490	25 Gallon Portable Sprayer *Available through Order Zone*	In Catalog
	LP20852	45 Gallon Bed Sprayer *Available through Order Zone*	In Catalog

XUV 855D Green & Yellow
Continued

CODE	ATTACHMENT IDENTIFIER	DESCRIPTION	SUGGESTED LIST PRICE USD ($)
		ATTACHMENTS FOR FIELD CONVERSION Continued...	
	LP22908	45 Gallon High Performance Sprayer *Available through Order Zone*	In Catalog
	LP20485	45 Gallon Tow-Behind Sprayer *Available through Order Zone*	In Catalog
	LP20853	90 Gallon Bed Sprayer *Available through Order Zone*	In Catalog
	LP22909	90 Gallon High Performance Bed Sprayer *Available through Order Zone*	In Catalog
	LPGP2700GH	GatorPal High Pressure Washer (2700 psi, Honda engine) *Contact Dealer for pricing.*	In Catalog
	LPGP2700GS	GatorPal High Pressure Washer (2700 psi, Subaru engine) *Contact Dealer for pricing.*	In Catalog
	LPGP3000GH	GatorPal High Pressure Washer (3000 psi, Honda engine) *Contact Dealer for pricing.*	In Catalog
	LPGP3000GS	GatorPal High Pressure Washer (3000 psi, Subaru engine) *Contact Dealer for pricing.*	In Catalog
	LP22885	HP 150 in. Precision Boom *Compatible with all High Performance Sprayers* *Available through Order Zone*	In Catalog
	LP39963	HP 45 Gallon Sprayer - Tow Behind *Available through Order Zone*	In Catalog
	LP22884	HP Boomless Nozzles *Compatible with all High Performance Sprayers* *Available through Order Zone*	In Catalog
	LP22911	HP Standard Gator Boom *Compatible with all High Performance Sprayers* *Available through Order Zone*	In Catalog
		Winch:	
	BM24443	Warn® Winch (3000 lb) *Requires 2-Inch Receiver Multi-Mount Kit for Front or Rear Receiver Mount.*	770.40
	BM23105	Winch - 2 Inch Receiver Multi-Mount Kit	225.77
	BM21392	Winch Accessories Kit *Accessory kit includes 1/2" shackle, 9,000 lbs. maximum capacity snatch block, (2) 1"x8' tree trunk protectors, and (1) pair of WARN winching gloves.*	129.47
		SERVICE CONTRACTS - RESIDENTIAL OWNERS/USE	
		Visit http://www.JohnDeere.com/ServicePlans for more information on John Deere Service Contracts. May not be Available in Parts of the U.S., Not Available in Canada. Price may vary due to driving distance and/or time from machine to dealership location.	
		John Deere Extended Service Plan - 2-Year Option *Available for T-Series, HPX and XUV utility vehicles only.)* *2-year extended service plan. (1 year of extended service protection);*	399.99

XUV 855D Green & Yellow

Continued

CODE	ATTACHMENT IDENTIFIER	DESCRIPTION	SUGGESTED LIST PRICE USD ($)
		SERVICE CONTRACTS - RESIDENTIAL OWNERS/USE Continued...	
		2-years of warranty transportation.	
		John Deere Extended Service Plan - 3-Year Option	569.99
		3-year extended service plan. (2 years of extended service protection);	
		3-years of warranty transportation.	

XUV 855D Power Steering Green & Yellow

Equipment for Base Machine

ENGINE:
22.8 Engine HP*(854cc),
Three Cylinder, Liquid-cooled,
Overhead Valves
4-Cycle Diesel
Full Pressure Lubrication
System
Replaceable Single Dry-Type
Element Air Cleaner with
Remote Intake
7.0 Gallon (26.49L) Fuel
Capacity
Solid-state Ignition (12V)
Spark-arresting Muffler
ELECTRICAL:
Electric Start
55 Amp 3-Phase Alternator
480 CCA Battery
Two 37.5 Watt Halogen
Headlights
TRANSAXLE/TRANSMISSION:
Continuously Variable
Transmission
Full Clutch Enclosure
Two-speed Transaxle
Operator Selectable 4WD
32 mph (51 kph) Maximum
Forward Speed
On-demand True Four-Wheel
Drive System
Auto Locking Front Differential
Traction Assist
Front and Rear Hydraulic Disk
Brakes
Hand-operated Sealed Wet Disk
Park brake
1.3 In. (27mm) Forged Rear
Axles
STEERING/SUSPENSION:
Power Steering
Rack and Pinion Steering
Independent Front Suspension
(IRS) with 8 inches (203mm)
of travel
Independent Rear Suspension
(IRS) with 9 inches (228.6mm)
of travel
Integrated 2" Rear Receiver
12.4 ft. Turning Radius
Ground Clearance: 11 In.
(267 mm)
Ground Clearance
(Under Foot Platform):
12.25 In (311 mm)
FRAME/STYLED PARTS:
Hydroform Technology Frame
PC/ASA (JDLOY) Hood and
Fenders
OCCUPANT PROTECTION SYSTEM(OPS):
1.75 In. (44.4 mm) Steel Tubular
Overhead Structure
Multiple Passenger Handholds
3-pt. Seat Belts
SAE J2194 & OSHA ROPS Certified
OPERATOR STATION:
High-back Bucket Seats
7 In. (178 mm) Slide Rail
Adjustment on Driver's Seat
Hip Restraint Bars for Driver
and Passenger
Passenger Grab Handles
Glove Box
Storage Compartment Under Hood
Two Cup Holders
Instrument gauge with 4
wheel-drive indicator, RPM,
MPH/KPH, time of day, fuel
level, total miles and hour
meters
12v DC Outlet
FRONTAL PROTECTION:
Heavy-Duty Front Bumper
Integrated 2 Inch Front Receiver
Hitch
REAR PROTECTION:
Engine carrier close ut panel
DIMENSIONS(WITH OPS):
116 In. Long x 62 In.
Wide x 75 Inches High
PAYLOAD CAPACITY:
1,400 Lb (635 kg) Total Payload
Capacity which Includes:
200 Lb (91 kg) Driver,
200 Lb (91 kg) Passenger, and
1000 Lb (454 kg) in Cargo Box
Towing Capacity:
1,500 Lb (680kg)
CARGO BOX:
45 In. Long x 52 In. Wide x
12 In. Deep
(1,143mm x 1321mm x 305mm)
16.4cu. ft (.46 cu.m) Capacity
1000 Lbs (454 kg) Box Capacity
Tilting Box
Hinged (Bottom) Tailgate
Load Guard
TIRES:
Front: 26x9-12 Ancla XT
(Extreme Terrain Tires)
Rear: 26x11-12 Ancla XT
(Extreme Terrain Tires)
SAFETY VIDEO TAPE:
Safety and Operational DVD
Operators Manual
*Engine HP is Provided by the
Engine Manufacturer to be Used
for Comparison Purposes Only,
Actual Operating HP will be
Less.
Safety and Operational DVD
Operators Manual
*Engine HP is Provided by the
Engine Manufacturer to be Used
for Comparison Purposes Only,
Actual Operating HP will be
Less.

CODE	ATTACHMENT IDENTIFIER	DESCRIPTION	SUGGESTED LIST PRICE USD ($)

Select One Code From Each Required Category

BASE MACHINE

F.O.B. Janesville, Wisconsin

398JM	XUV 855D Power Steering Green & Yellow *Base Machine Suggested List Price Does Not Include $400 USD Destination Charge.*	13,599.00

DESTINATION

0202	US/Canada	In Base Price
0230	Australia/New Zealand	Same Price

XUV 855D Power Steering Green & Yellow
Continued

CODE	ATTACHMENT IDENTIFIER	DESCRIPTION	SUGGESTED LIST PRICE USD ($)
		DESTINATION Continued...	
0195		Mexico	Same Price
0250		All Other Countries	Same Price
0179		Europe	312.00
		WHEELS WITH TIRES (FOUR)	
1000		Yellow Steel Wheels Terra Hawk All Terrain Tires	Same Price
1001		Yellow Steel Wheels Ancla M-T Extreme Terrain Tire	In Base Price
1002		Yellow Alloy Wheels Maxxis Bighorn Radial Tires	823.00
		DRIVER SEAT	
2000		21 In. Standard XUV HB Seat - Yellow	In Base Price
2001		Bench Seat - Yellow	Same Price
2002		High Performance Sport Seat - Black	296.00
		DELUXE CARGO BOX	
3000		Deluxe Cargo Box - with Paint	In Base Price
3001		Deluxe Cargo Box - with Polyurea	264.00
3002		Deluxe Cargo Box with Polyurea Liner, Brake, Tail, Reverse Lights & Light Protector	496.00
		OVERHEAD PROTECTION STRUCTURES (OPS)	
4000		OPS	In Base Price
4002		Deluxe Cab Frame/Including Windshield, Wiper, Electrical Kit and Rear Window	2,368.00
4008		OPS with Black Poly Roof	416.00
		POWER AND FRONT PROTECTION PACKAGE	
5000		Power and Front Protection Package Package Consists of: Power Lift, Heavy Duty Front Brushguard, Heavy Duty Front Fender Guard, Floor Mats *Package Priced at 10% discount.*	1,261.00
5010		Manual Lift *Must order 5010 option code when ordering 6000 option code.*	In Base Price
		REAR PROTECTION PACKAGE	
5100		Rear Protection Package Package Consists of: Rear Bumper, Bed Mat, Cargo Box Heavy Duty Fender Guards *Package Priced at 10% discount.*	494.00
5110		Less Rear Protection Package	In Base Price
		FRONT BRUSH GUARD	

XUV 855D Power Steering Green & Yellow
Continued

CODE	ATTACHMENT IDENTIFIER	DESCRIPTION	SUGGESTED LIST PRICE USD ($)
		FRONT BRUSH GUARD Continued...	
6000		Heavy Duty Front Brushguard	233.00
6010		Less Front Brush Guard *Must order 6010 option code when ordering 5000 option code.*	In Base Price
		HOOD RACK	
6300		Front Hood Rack XUV *Must order 5000 or 6000 option code when ordering 6300 option code.*	226.00
6310		Less Front Hood Rack XUV *Must order 6310 option code when ordering 4002 option code.*	In Base Price
		Attachments-Order as Desired	
		Spanish North American Kit:	
9435		Spanish North American Operator's Manual and Decal Kit	No Charge
		ATTACHMENTS FOR FIELD CONVERSION	
		Blades:	
	LP25355	Heavy Duty POWERtach Blade - 72" *Available through Order Zone*	In Catalog
	LPPK140	POWERtach Deflector Shield *Available through Order Zone*	In Catalog
	LPPK120	POWERtach Markers *Available through Order Zone*	In Catalog
	LPPWBK72	POWERtach Poly Wear Bar *Available through Order Zone*	In Catalog
	LPPK150	POWERtach Rubber Squeegee *Available through Order Zone*	In Catalog
	LPPK160	POWERtach Skid Shoes *Available through Order Zone*	In Catalog
		Cabs/Roofs/Windshields:	
	BM23638	Air Cleaner Relocation Kit (Diesel) *Quiet Cab Kit for Deluxe Cab. Requires Noise Reduction Kit. Can also be used with Poly Cab for noise reduction.*	61.37
	BM23608	Cab Heater *Requires Cab Heater Fitting Kit.*	1,130.99
	VGB10548	Cab Heater Fitting Kit	23.54
	BM23498	Deluxe Cab Frame *Requires Seat Belt Kit, Glass Door Kit, Glass Windshield with Wiper, and Rear Window Kit to complete full Deluxe Cab.*	1,443.43
	VGB10505	Electrical Kit *Required for field installed Deluxe cabs.*	94.16

XUV 855D Power Steering Green & Yellow
Continued

CODE	ATTACHMENT IDENTIFIER	DESCRIPTION	SUGGESTED LIST PRICE USD ($)
		ATTACHMENTS FOR FIELD CONVERSION Continued...	
	BM24560	Glass Door Kit - Deluxe Cab	2,427.83
	BM23507	Glass Windshield with Wiper - Deluxe Cab	874.19
	BM21656	Interior Light Kit - Deluxe Cab *Requires Electrical Kit.*	58.86
	BM23750	Noise Reduction Kit (Gas & Diesel) *Quiet Cab Kit for Deluxe Cab. Requires Air Cleaner Relocation Kit.*	373.43
	BM23742	OPS Full No-Scratch Windshield *Not compatible with Deluxe Cab Frame. Compatible with poly cab.*	531.79
	BM23741	OPS Full Poly Windshield *Not compatible with Deluxe Cab Frame. Compatible with poly cab.*	423.71
	BM23743	OPS Glass Windshield with Wiper *Not compatible with Deluxe Cab Frame. Compatible with poly cab.*	874.19
	BM23740	OPS Half Poly Windshield *Not compatible with Deluxe Cab Frame.*	339.19
	BM24115	OPS Poly Roof - Black	445.11
	BM24561	OPS Rear Panel *Part of the Poly cab, or can be mounted on the OPS alone. Requires full windshield, poly cab doors, and poly roof to complete poly cab.*	502.90
	LP10314	OPS Side Mirror - Left *Available through Order Zone.*	In Catalog
	LP10315	OPS Side Mirror - Right *Available through Order Zone.*	In Catalog
	LP93127	OPS Soft Roof - Black *Available through Order Zone*	In Catalog
	BM24117	Poly Cab Doors *Includes left and right doors, with side mirrors. Requires full windshield, OPS rear panel, and poly roof to complete poly cab.*	2,675.00
	BM23505	Rear Window Kit - Deluxe Cab	225.77
	BM23755	Seat Belt Kit *Required with Deluxe Cab Frame*	144.46
	BM23508	Side Mirrors - Deluxe Cab	129.47
	BM21646	Visor (1) Kit - Deluxe cab	70.61
	BM23534	Windshield Washer Fluid Kit - Deluxe Cab *Requires Electrical Kit.*	173.34
		Cargo Box Options / Storage:	
	BM23849	5 Gallon Pail Holder	38.51
	BM22772	Cargo Box Bed Mat	119.84

XUV 855D Power Steering Green & Yellow
Continued

CODE	ATTACHMENT IDENTIFIER	DESCRIPTION	SUGGESTED LIST PRICE USD ($)
		ATTACHMENTS FOR FIELD CONVERSION Continued...	
	BM22769	Cargo Box Divider	191.53
	BM22811	Cargo Box FenderGuard *Requires Rear Bumper*	191.53
	BM23694	Cargo Box Power Lift Kit	858.14
	BM22774	Cargo Box Side Extension Kit	511.46
	LP19880	Deluxe Cargo Box Cover - Black *Available through Order Zone*	In Catalog
	BM22980	Front Hood Rack *Requires Front Brush Guard.*	241.81
	LP30320	Fuel Pack *Available through Order Zone*	In Catalog
	LP19878	Gator Gear Organizer - Black *Available through Order Zone*	In Catalog
	LP19886	Gator Tool Box *Contact Dealer for pricing.*	In Catalog
	LP93117	OPS Overhead Organizer - Black *Available through Order Zone*	In Catalog
	LP46485	Ratcheting Rhino Grip *Available through Order Zone.*	In Catalog
	LP25929	Rhino Grip XL - Double *Available through Order Zone.*	In Catalog
	LP25928	Rhino Grip XL - Single *Available through Order Zone.*	In Catalog
	LP19882	Saw Press Bracket *Available through Order Zone*	In Catalog
	BM22775	Side Tool Rack	304.96
	LP93207	Soft Rear Screen and Organizer - Black *Available through Order Zone*	In Catalog
		Carts / Hitches:	
	LPPCT10LXATV	10AT Cart *Available through Order Zone*	In Catalog
	LPPCT17ATJD	17AT Cart *Available through Order Zone.*	In Catalog
	LPUT21JD	21 Steel Utility Cart *Available through Order Zone*	In Catalog
	PM05101	Ball Mount - 1.875 in. (48mm)	See Parts
	PM05201	Ball Mount - 2 in. (51mm)	See Parts

XUV 855D Power Steering Green & Yellow
Continued

CODE	ATTACHMENT IDENTIFIER	DESCRIPTION	SUGGESTED LIST PRICE USD ($)
		ATTACHMENTS FOR FIELD CONVERSION Continued...	
	BM22290	Drawbar - 2 in. (51mm)	38.51
		Custom & High Performance:	
	BM24021	Fox ® High Performance Racing Shox	1,758.01
	BM22703	Seat-Belt Comfort Strap (2) *Also compatible with Deluxe Cab.*	77.04
	BM24453	Stereo Mounting Kit *Includes mounting kit only; must choose one of the following three head units to have complete stereo:* *Radio, Heavy Duty AM / FM / WB / AUX (SWJHD1120)* *Radio, Heavy Duty AM / FM / WB / SAT / I-POD (SWJHD1620)* *Radio, AM / FM / WB / CD / AUX / SAT Ready (SWJHD3620)* *Must order head unit through Parts. Stereo Mounting Kit not compatible with Deluxe Cab.*	521.09
		Engine:	
	AM882530	Adaptor Parts for Engine Coolant Heater	See Parts
	AR87167	Engine Coolant Heater (110 Volt) *Requires adapter parts for engine coolant heater. Requires AM134805 Engine Block Heater Adapter.*	See Parts
		Hunting / Camo:	
	LP19884	Cargo Box Gun Mount - Black *Available through Order Zone*	In Catalog
	LP10319	Gun Mount Kit - Overhead *Includes 2 Gun Boot VI.* *Available through Order Zone*	In Catalog
	LP93103	Vehicle Cover, Cab / ROPS - Camo *Fits all Models Equipped with OPS and Deluxe Cab Structure.* *Available through Order Zone*	In Catalog
		Lights / Signals:	
	BM24726	Backup Alarm	74.56
	BM24013	Beacon Light *Requires OPS Poly Roof and OPS Switch Bank.*	219.36
	BM21649	Beacon Light Kit - Deluxe Cab *Requires Electrical Kit.*	371.29
	BM24591	Brake / Tail Light Kit	160.50
	BM24586	Deluxe Signal Light Kit *Includes Turn Signals (Front & Rear), 4-Way Flashers, Brake, Tail & Reverse Lights.*	374.50
	BM24587	Deluxe Signal Light Kit *Includes Turn Signals (Front & Rear) and 4-Way Flashers. Compatible with the 825i and 825i S4 vehicles equipped with the 3000 cargo box option code or 625i, 855D and 855D S4 vehicles equipped with the 3002 Cargo Box option code which already includes the brake & tail lights.*	171.20
	BM21651	Front Light Kit - Deluxe Cab *Requires Electrical Kit.*	293.19

XUV 855D Power Steering Green & Yellow
Continued

CODE	ATTACHMENT IDENTIFIER	DESCRIPTION	SUGGESTED LIST PRICE USD ($)
		ATTACHMENTS FOR FIELD CONVERSION Continued...	
	BM23442	Hella HID Sport Driving Lights *Requires OPS Switch Bank for OPS or poly roof mounting, or Front Brushguard for bumper mounting.*	935.19
	BM24108	Hella Performance Spot Lights *Requires OPS Switch Bank for OPS or poly roof mounting, or Front Brushguard for bumper mounting.*	343.47
	BM23370	Horn Kit	97.37
	BM24090	Long Range Light Kit *Can also mount behind front bumper cover directly to frame.* *Requires OPS Switch Bank for OPS or poly roof mounting, or Front Brushguard for brushguard mounting.*	191.53
	BM24016	Mid-Range Light Kit *Requires OPS Switch Bank for OPS or poly roof mounting. Can be installed on the front or rear of OPS or roof.*	123.06
	BM24089	OPS Switch Bank *Accommodates up to three separate OPS accessory kits.*	67.41
	BM21652	Rear Light Kit - Deluxe Cab *Requires Electrical Kit.*	217.21
		Protection:	
	BM23727	Deflector Plate	55.64
	BM24282	Floormat *Also front floormat on S4*	78.11
	BM24463	Front CV Guards	114.49
	BM22987	Heavy Duty Fender Guard *Compatible with Standard Front Bumper.*	215.07
	BM22841	Heavy Duty Front Brush Guard	249.31
	BM22767	Heavy Duty Rear Bumper	236.47
	BM22962	Rear CV Guards	114.49
	BM22773	Tail Light Protectors	89.89
	LP93107	Vehicle Cover, Cab / ROPS - Black *Available through Order Zone.*	In Catalog
		Seats / Wheels / Tires:	
	LP40897	Camoplast Tracks (855D) *Available through Order Zone*	In Catalog
		Sprayers / Pressure Washers:	
	LP33597	25 Gallon Bed Sprayer *Available through Order Zone*	In Catalog
	LP19490	25 Gallon Portable Sprayer *Available through Order Zone*	In Catalog

XUV 855D Power Steering Green & Yellow
Continued

CODE	ATTACHMENT IDENTIFIER	DESCRIPTION	SUGGESTED LIST PRICE USD ($)
		ATTACHMENTS FOR FIELD CONVERSION Continued...	
	LP20852	45 Gallon Bed Sprayer *Available through Order Zone*	In Catalog
	LP22908	45 Gallon High Performance Sprayer *Available through Order Zone*	In Catalog
	LP20485	45 Gallon Tow-Behind Sprayer *Available through Order Zone*	In Catalog
	LP20853	90 Gallon Bed Sprayer *Available through Order Zone*	In Catalog
	LP22909	90 Gallon High Performance Bed Sprayer *Available through Order Zone*	In Catalog
	LPGP2700GH	GatorPal High Pressure Washer (2700 psi, Honda engine) *Contact Dealer for pricing.*	In Catalog
	LPGP2700GS	GatorPal High Pressure Washer (2700 psi, Subaru engine) *Contact Dealer for pricing.*	In Catalog
	LPGP3000GH	GatorPal High Pressure Washer (3000 psi, Honda engine) *Contact Dealer for pricing.*	In Catalog
	LPGP3000GS	GatorPal High Pressure Washer (3000 psi, Subaru engine) *Contact Dealer for pricing.*	In Catalog
	LP22885	HP 150 in. Precision Boom *Compatible with all High Performance Sprayers* *Available through Order Zone*	In Catalog
	LP39963	HP 45 Gallon Sprayer - Tow Behind *Available through Order Zone*	In Catalog
	LP22884	HP Boomless Nozzles *Compatible with all High Performance Sprayers* *Available through Order Zone*	In Catalog
	LP22911	HP Standard Gator Boom *Compatible with all High Performance Sprayers* *Available through Order Zone*	In Catalog
		Winch:	
	BM24443	Warn® Winch (3000 lb) *Requires 2-Inch Receiver Multi-Mount Kit for Front or Rear Receiver Mount.*	770.40
	BM23105	Winch - 2 Inch Receiver Multi-Mount Kit	225.77
	BM21392	Winch Accessories Kit *Accessory kit includes 1/2" shackle, 9,000 lbs. maximum capacity snatch block, (2) 1"x8' tree trunk protectors, and (1) pair of WARN winching gloves.*	129.47

SERVICE CONTRACTS - RESIDENTIAL OWNERS/USE

Visit http://www.JohnDeere.com/ServicePlans for more information on John Deere Service Contracts. May not be Available in Parts of the U.S., Not Available in Canada. Price may vary due to driving distance and/or time from machine to dealership location.

XUV 855D Power Steering Green & Yellow

Continued

CODE	ATTACHMENT IDENTIFIER	DESCRIPTION	SUGGESTED LIST PRICE USD ($)
		SERVICE CONTRACTS - RESIDENTIAL OWNERS/USE Continued...	
		John Deere Extended Service Plan - 2-Year Option *Available for T-Series, HPX and XUV utility vehicles only.)* *2-year extended service plan. (1 year of extended service protection);* *2-years of warranty transportation.*	399.99
		John Deere Extended Service Plan - 3-Year Option *3-year extended service plan. (2 years of extended service protection);* *3-years of warranty transportation.*	569.99

XUV 855D Olive & Black

Equipment for Base Machine

ENGINE:
22.8 Engine HP*(854cc),
Three Cylinder, Liquid-cooled,
Overhead Valves
4-Cycle Diesel
Full Pressure Lubrication
System
Replaceable Single Dry-Type
Element Air Cleaner with
Remote Intake
7.0 Gallon (26.49L) Fuel
Capacity
Solid-state Ignition (12V)
Spark-arresting Muffler
ELECTRICAL:
Electric Start
55 Amp 3-Phase Alternator
480 CCA Battery
Two 37.5 Watt Halogen
Headlights
TRANSAXLE/TRANSMISSION:
Continuously Variable
Transmission
Full Clutch Enclosure
Two-speed Transaxle
Operator Selectable 4WD
32 mph (51 kph) Maximum
Forward Speed
On-demand True Four-Wheel
Drive System
Auto Locking Front Differential
Traction Assist
Front and Rear Hydraulic Disk
Brakes
Hand-operated Sealed Wet Disk
Park brake
1.3 In. (27mm) Forged Rear
Axles
STEERING/SUSPENSION:
Rack and Pinion Steering
Independent Front Suspension
(IRS) with 8 inches (203mm)
of travel
Independent Rear Suspension
(IRS) with 9 inches (228.6mm)
of travel
Integrated 2" Rear Receiver
12.4 ft. Turning Radius
Ground Clearance: 11 In.
(267 mm)
Ground Clearance
(Under Foot Platform):
12.25 In (311 mm)
FRAME/STYLED PARTS:
Hydroform Technology Frame
PC/ASA (JDLOY) Hood and
Fenders
OCCUPANT PROTECTION SYSTEM(OPS):
1.75 In. (44.4 mm) Steel Tubular
Overhead Structure
Multiple Passenger Handholds
3-pt. Seat Belts
SAE J2194 & OSHA ROPS Certified
OPERATOR STATION:
High-back Bucket Seats
7 In. (178 mm) Slide Rail
Adjustment on Driver's Seat
Hip Restraint Bars for Driver
and Passenger
Passenger Grab Handles
Glove Box
Storage Compartment Under Hood
Two Cup Holders
Instrument gauge with 4
wheel-drive indicator, RPM,
MPH/KPH, time of day, fuel
level, total miles and hour
meters
12v DC Outlet
FRONTAL PROTECTION:
Heavy-Duty Front Bumper
Integrated 2 Inch Front Receiver
Hitch
REAR PROTECTION:
Engine carrier close ut panel
DIMENSIONS(WITH OPS):
116 In. Long x 62 In.
Wide x 75 Inches High
PAYLOAD CAPACITY:
1,400 Lb (635 kg) Total Payload
Capacity which Includes:
200 Lb (91 kg) Driver,
200 Lb (91 kg) Passenger, and
1000 Lb (454 kg) in Cargo Box
Towing Capacity:
1,500 Lb (680kg)
CARGO BOX:
45 In. Long x 52 In. Wide x
12 In. Deep
(1,143mm x 1321mm x 305mm)
16.4cu. ft (.46 cu.m) Capacity
1000 Lbs (454 kg) Box Capacity
Tilting Box
Hinged (Bottom) Tailgate
Load Guard
TIRES:
Front: 26x9-12 Ancla XT
(Extreme Terrain Tires)
Rear: 26x11-12 Ancla XT
(Extreme Terrain Tires)
SAFETY VIDEO TAPE:
Safety and Operational DVD
Operators Manual
*Engine HP is Provided by the
Engine Manufacturer to be Used
for Comparison Purposes Only,
Actual Operating HP will be
Less.

CODE	ATTACHMENT IDENTIFIER	DESCRIPTION	SUGGESTED LIST PRICE USD ($)

Select One Code From Each Required Category

BASE MACHINE

F.O.B. Janesville, Wisconsin

398GM	XUV 855D Olive & Black *Base Machine Suggested List Price Does Not Include $400 USD Destination Charge.*	12,699.00

DESTINATION

0202	US/Canada	In Base Price
0230	Australia/New Zealand	Same Price
0195	Mexico	Same Price

XUV 855D Olive & Black
Continued

CODE	ATTACHMENT IDENTIFIER	DESCRIPTION	SUGGESTED LIST PRICE USD ($)
		DESTINATION Continued...	
0250		All Other Countries	Same Price
0179		Europe	312.00
		WHEELS WITH TIRES (FOUR)	
1000		Black Steel Wheels Terra Hawk All Terrain Tires	Same Price
1001		Black Steel Wheels Ancla M-T Extreme Terrain Tire	In Base Price
1002		Black Alloy Wheels Maxxis Bighorn Radial Tires	823.00
1003		Silver Alloy Wheels Maxxis Bighorn Radial Tires	823.00
		DRIVER SEAT	
2000		21 In. Standard XUV HB Seat - Black	In Base Price
2001		Bench Seat - Black	Same Price
2002		High Performance Sport Seat - Black	296.00
		DELUXE CARGO BOX	
3000		Deluxe Cargo Box - with Paint	In Base Price
3001		Deluxe Cargo Box - with Polyurea	264.00
3002		Deluxe Cargo Box with Polyurea Liner, Brake, Tail, Reverse Lights & Light Protector	496.00
		OVERHEAD PROTECTION STRUCTURES (OPS)	
4000		OPS	In Base Price
4002		Deluxe Cab Frame/Including Windshield, Wiper, Electrical Kit and Rear Window	2,368.00
4008		OPS with Black Poly Roof	416.00
		POWER AND FRONT PROTECTION PACKAGE	
5000		Power and Front Protection Package Package Consists of: Power Lift, Heavy Duty Front Brushguard, Heavy Duty Front Fender Guard, Floor Mats *Package Priced at 10% discount.*	1,261.00
5010		Manual Lift *Must order 5010 option code when ordering 6000 option code.*	In Base Price
		REAR PROTECTION PACKAGE	
5100		Rear Protection Package Package Consists of: Rear Bumper, Bed Mat, Cargo Box Heavy Duty Fender Guards *Package Priced at 10% discount.*	494.00
5110		Less Rear Protection Package	In Base Price
		FRONT BRUSH GUARD	

XUV 855D Olive & Black
Continued

CODE	ATTACHMENT IDENTIFIER	DESCRIPTION	SUGGESTED LIST PRICE USD ($)
		FRONT BRUSH GUARD Continued...	
6000		Heavy Duty Front Brushguard	233.00
6010		Less Front Brush Guard *Must order 6010 option code when ordering 5000 option code.*	In Base Price
		HOOD RACK	
6300		Front Hood Rack XUV *Must order 5000 or 6000 option code when ordering 6300 option code.*	226.00
6310		Less Front Hood Rack XUV *Must order 6310 option code when ordering 4002 option code.*	In Base Price
		Attachments-Order as Desired	
		Spanish North American Kit:	
9435		Spanish North American Operator's Manual and Decal Kit	No Charge
		ATTACHMENTS FOR FIELD CONVERSION	
		Blades:	
	LP25355	Heavy Duty POWERtach Blade - 72" *Available through Order Zone*	In Catalog
	LPPK140	POWERtach Deflector Shield *Available through Order Zone*	In Catalog
	LPPK120	POWERtach Markers *Available through Order Zone*	In Catalog
	LPPWBK72	POWERtach Poly Wear Bar *Available through Order Zone*	In Catalog
	LPPK150	POWERtach Rubber Squeegee *Available through Order Zone*	In Catalog
	LPPK160	POWERtach Skid Shoes *Available through Order Zone*	In Catalog
		Cabs/Roofs/Windshields:	
	BM23638	Air Cleaner Relocation Kit (Diesel) *Quiet Cab Kit for Deluxe Cab. Requires Noise Reduction Kit. Can also be used with Poly Cab for noise reduction.*	61.37
	BM23608	Cab Heater *Requires Cab Heater Fitting Kit.*	1,130.99
	VGB10548	Cab Heater Fitting Kit	23.54
	BM23498	Deluxe Cab Frame *Requires Seat Belt Kit, Glass Door Kit, Glass Windshield with Wiper, and Rear Window Kit to complete full Deluxe Cab.*	1,443.43
	VGB10505	Electrical Kit *Required for field installed Deluxe cabs.*	94.16

XUV 855D Olive & Black
Continued

CODE	ATTACHMENT IDENTIFIER	DESCRIPTION	SUGGESTED LIST PRICE USD ($)
		ATTACHMENTS FOR FIELD CONVERSION Continued...	
	BM24560	Glass Door Kit - Deluxe Cab	2,427.83
	BM23507	Glass Windshield with Wiper - Deluxe Cab	874.19
	BM21656	Interior Light Kit - Deluxe Cab *Requires Electrical Kit.*	58.86
	BM23750	Noise Reduction Kit (Gas & Diesel) *Quiet Cab Kit for Deluxe Cab. Requires Air Cleaner Relocation Kit.*	373.43
	BM23742	OPS Full No-Scratch Windshield *Not compatible with Deluxe Cab Frame. Compatible with poly cab.*	531.79
	BM23741	OPS Full Poly Windshield *Not compatible with Deluxe Cab Frame. Compatible with poly cab.*	423.71
	BM23743	OPS Glass Windshield with Wiper *Not compatible with Deluxe Cab Frame. Compatible with poly cab.*	874.19
	BM23740	OPS Half Poly Windshield *Not compatible with Deluxe Cab Frame.*	339.19
	BM24115	OPS Poly Roof - Black	445.11
	BM24561	OPS Rear Panel *Part of the Poly cab, or can be mounted on the OPS alone. Requires full windshield, poly cab doors, and poly roof to complete poly cab.*	502.90
	LP10314	OPS Side Mirror - Left *Available through Order Zone.*	In Catalog
	LP10315	OPS Side Mirror - Right *Available through Order Zone.*	In Catalog
	LP93127	OPS Soft Roof - Black *Available through Order Zone*	In Catalog
	BM24117	Poly Cab Doors *Includes left and right doors, with side mirrors. Requires full windshield, OPS rear panel, and poly roof to complete poly cab.*	2,675.00
	BM23505	Rear Window Kit - Deluxe Cab	225.77
	BM23755	Seat Belt Kit *Required with Deluxe Cab Frame*	144.46
	BM23508	Side Mirrors - Deluxe Cab	129.47
	BM21646	Visor (1) Kit - Deluxe cab	70.61
	BM23534	Windshield Washer Fluid Kit - Deluxe Cab *Requires Electrical Kit.*	173.34
		Cargo Box Options / Storage:	
	BM23849	5 Gallon Pail Holder	38.51
	BM22772	Cargo Box Bed Mat	119.84

XUV 855D Olive & Black
Continued

CODE	ATTACHMENT IDENTIFIER	DESCRIPTION	SUGGESTED LIST PRICE USD ($)
		ATTACHMENTS FOR FIELD CONVERSION Continued...	
	BM22769	Cargo Box Divider	191.53
	BM22811	Cargo Box FenderGuard *Requires Rear Bumper*	191.53
	BM23694	Cargo Box Power Lift Kit	858.14
	BM22774	Cargo Box Side Extension Kit	511.46
	LP19880	Deluxe Cargo Box Cover - Black *Available through Order Zone*	In Catalog
	BM22980	Front Hood Rack *Requires Front Brush Guard.*	241.81
	LP30320	Fuel Pack *Available through Order Zone*	In Catalog
	LP19878	Gator Gear Organizer - Black *Available through Order Zone*	In Catalog
	LP19886	Gator Tool Box *Contact Dealer for pricing.*	In Catalog
	LP93117	OPS Overhead Organizer - Black *Available through Order Zone*	In Catalog
	LP46485	Ratcheting Rhino Grip *Available through Order Zone.*	In Catalog
	LP25929	Rhino Grip XL - Double *Available through Order Zone.*	In Catalog
	LP25928	Rhino Grip XL - Single *Available through Order Zone.*	In Catalog
	LP19882	Saw Press Bracket *Available through Order Zone*	In Catalog
	BM22775	Side Tool Rack	304.96
	LP93207	Soft Rear Screen and Organizer - Black *Available through Order Zone*	In Catalog
		Carts / Hitches:	
	LPPCT10LXATV	10AT Cart *Available through Order Zone*	In Catalog
	LPPCT17ATJD	17AT Cart *Available through Order Zone.*	In Catalog
	LPUT21JD	21 Steel Utility Cart *Available through Order Zone*	In Catalog
	PM05101	Ball Mount - 1.875 in. (48mm)	See Parts
	PM05201	Ball Mount - 2 in. (51mm)	See Parts

XUV 855D Olive & Black
Continued

CODE	ATTACHMENT IDENTIFIER	DESCRIPTION	SUGGESTED LIST PRICE USD ($)
		ATTACHMENTS FOR FIELD CONVERSION Continued...	
	BM22290	Drawbar - 2 in. (51mm)	38.51
		Custom & High Performance:	
	BM24021	Fox ® High Performance Racing Shox	1,758.01
	BM22703	Seat-Belt Comfort Strap (2) *Also compatible with Deluxe Cab.*	77.04
	BM24453	Stereo Mounting Kit *Includes mounting kit only; must choose one of the following three head units to have complete stereo:* *Radio, Heavy Duty AM / FM / WB / AUX (SWJHD1120)* *Radio, Heavy Duty AM / FM / WB / SAT / I-POD (SWJHD1620)* *Radio, AM / FM / WB / CD / AUX / SAT Ready (SWJHD3620)* *Must order head unit through Parts. Stereo Mounting Kit not compatible with Deluxe Cab.*	521.09
		Engine:	
	AM882530	Adaptor Parts for Engine Coolant Heater	See Parts
	AR87167	Engine Coolant Heater (110 Volt) *Requires adapter parts for engine coolant heater. Requires AM134805 Engine Block Heater Adapter.*	See Parts
		Hunting / Camo:	
	LP19884	Cargo Box Gun Mount - Black *Available through Order Zone*	In Catalog
	LP10319	Gun Mount Kit - Overhead *Includes 2 Gun Boot VI.* *Available through Order Zone*	In Catalog
	LP93103	Vehicle Cover, Cab / ROPS - Camo *Fits all Models Equipped with OPS and Deluxe Cab Structure.* *Available through Order Zone*	In Catalog
		Lights / Signals:	
	BM24726	Backup Alarm	74.56
	BM24013	Beacon Light *Requires OPS Poly Roof and OPS Switch Bank.*	219.36
	BM21649	Beacon Light Kit - Deluxe Cab *Requires Electrical Kit.*	371.29
	BM24591	Brake / Tail Light Kit	160.50
	BM24586	Deluxe Signal Light Kit *Includes Turn Signals (Front & Rear), 4-Way Flashers, Brake, Tail & Reverse Lights.*	374.50
	BM24587	Deluxe Signal Light Kit *Includes Turn Signals (Front & Rear) and 4-Way Flashers. Compatible with the 825i and 825i S4 vehicles equipped with the 3000 cargo box option code or 625i, 855D and 855D S4 vehicles equipped with the 3002 Cargo Box option code which already includes the brake & tail lights.*	171.20
	BM21651	Front Light Kit - Deluxe Cab *Requires Electrical Kit.*	293.19

XUV 855D Olive & Black
Continued

CODE	ATTACHMENT IDENTIFIER	DESCRIPTION	SUGGESTED LIST PRICE USD ($)
		ATTACHMENTS FOR FIELD CONVERSION Continued...	
	BM23442	Hella HID Sport Driving Lights *Requires OPS Switch Bank for OPS or poly roof mounting, or Front Brushguard for bumper mounting.*	935.19
	BM24108	Hella Performance Spot Lights *Requires OPS Switch Bank for OPS or poly roof mounting, or Front Brushguard for bumper mounting.*	343.47
	BM23370	Horn Kit	97.37
	BM24090	Long Range Light Kit *Can also mount behind front bumper cover directly to frame.* *Requires OPS Switch Bank for OPS or poly roof mounting, or Front Brushguard for brushguard mounting.*	191.53
	BM24016	Mid-Range Light Kit *Requires OPS Switch Bank for OPS or poly roof mounting. Can be installed on the front or rear of OPS or roof.*	123.06
	BM24089	OPS Switch Bank *Accommodates up to three separate OPS accessory kits.*	67.41
	BM21652	Rear Light Kit - Deluxe Cab *Requires Electrical Kit.*	217.21
		Protection:	
	BM23727	Deflector Plate	55.64
	BM24282	Floormat *Also front floormat on S4*	78.11
	BM24463	Front CV Guards	114.49
	BM22987	Heavy Duty Fender Guard *Compatible with Standard Front Bumper.*	215.07
	BM22841	Heavy Duty Front Brush Guard	249.31
	BM22767	Heavy Duty Rear Bumper	236.47
	BM22962	Rear CV Guards	114.49
	BM22773	Tail Light Protectors	89.89
	LP93107	Vehicle Cover, Cab / ROPS - Black *Available through Order Zone.*	In Catalog
		Seats / Wheels / Tires:	
	LP40897	Camoplast Tracks (855D) *Available through Order Zone*	In Catalog
		Sprayers / Pressure Washers:	
	LP33597	25 Gallon Bed Sprayer *Available through Order Zone*	In Catalog
	LP19490	25 Gallon Portable Sprayer *Available through Order Zone*	In Catalog

XUV 855D Olive & Black
Continued

CODE	ATTACHMENT IDENTIFIER	DESCRIPTION	SUGGESTED LIST PRICE USD ($)
		ATTACHMENTS FOR FIELD CONVERSION Continued...	
	LP20852	45 Gallon Bed Sprayer *Available through Order Zone*	In Catalog
	LP22908	45 Gallon High Performance Sprayer *Available through Order Zone*	In Catalog
	LP20485	45 Gallon Tow-Behind Sprayer *Available through Order Zone*	In Catalog
	LP20853	90 Gallon Bed Sprayer *Available through Order Zone*	In Catalog
	LP22909	90 Gallon High Performance Bed Sprayer *Available through Order Zone*	In Catalog
	LPGP2700GH	GatorPal High Pressure Washer (2700 psi, Honda engine) *Contact Dealer for pricing.*	In Catalog
	LPGP2700GS	GatorPal High Pressure Washer (2700 psi, Subaru engine) *Contact Dealer for pricing.*	In Catalog
	LPGP3000GH	GatorPal High Pressure Washer (3000 psi, Honda engine) *Contact Dealer for pricing.*	In Catalog
	LPGP3000GS	GatorPal High Pressure Washer (3000 psi, Subaru engine) *Contact Dealer for pricing.*	In Catalog
	LP22885	HP 150 in. Precision Boom *Compatible with all High Performance Sprayers* *Available through Order Zone*	In Catalog
	LP39963	HP 45 Gallon Sprayer - Tow Behind *Available through Order Zone*	In Catalog
	LP22884	HP Boomless Nozzles *Compatible with all High Performance Sprayers* *Available through Order Zone*	In Catalog
	LP22911	HP Standard Gator Boom *Compatible with all High Performance Sprayers* *Available through Order Zone*	In Catalog
		Winch:	
	BM24443	Warn® Winch (3000 lb) *Requires 2-Inch Receiver Multi-Mount Kit for Front or Rear Receiver Mount.*	770.40
	BM23105	Winch - 2 Inch Receiver Multi-Mount Kit	225.77
	BM21392	Winch Accessories Kit *Accessory kit includes 1/2" shackle, 9,000 lbs. maximum capacity snatch block, (2) 1"x8' tree trunk protectors, and (1) pair of WARN winching gloves.*	129.47

SERVICE CONTRACTS - RESIDENTIAL OWNERS/USE

Visit http://www.JohnDeere.com/ServicePlans for more information on John Deere Service Contracts. May not be Available in Parts of the U.S., Not Available in Canada. Price may vary due to driving distance and/or time from machine to dealership location.

XUV 855D Olive & Black

Continued

CODE	ATTACHMENT IDENTIFIER	DESCRIPTION	SUGGESTED LIST PRICE USD ($)
		SERVICE CONTRACTS - RESIDENTIAL OWNERS/USE Continued...	
		John Deere Extended Service Plan - 2-Year Option *Available for T-Series, HPX and XUV utility vehicles only.)* *2-year extended service plan. (1 year of extended service protection);* *2-years of warranty transportation.*	399.99
		John Deere Extended Service Plan - 3-Year Option *3-year extended service plan. (2 years of extended service protection);* *3-years of warranty transportation.*	569.99

XUV 855D Power Steering Olive & Black

Equipment for Base Machine

ENGINE:
22.8 Engine HP*(854cc),
Three Cylinder, Liquid-cooled,
Overhead Valves
4-Cycle Diesel
Full Pressure Lubrication
System
Replaceable Single Dry-Type
Element Air Cleaner with
Remote Intake
7.0 Gallon (26.49L) Fuel
Capacity
Solid-state Ignition (12V)
Spark-arresting Muffler
ELECTRICAL:
Electric Start
55 Amp 3-Phase Alternator
480 CCA Battery
Two 37.5 Watt Halogen
Headlights
TRANSAXLE/TRANSMISSION:
Continuously Variable
Transmission
Full Clutch Enclosure
Two-speed Transaxle
Operator Selectable 4WD
32 mph (51 kph) Maximum
Forward Speed
On-demand True Four-Wheel
Drive System
Auto Locking Front Differential
Traction Assist
Front and Rear Hydraulic Disk
Brakes
Hand-operated Sealed Wet Disk
Park brake
1.3 In. (27mm) Forged Rear
Axles
STEERING/SUSPENSION:
Power Steering
Rack and Pinion Steering
Independent Front Suspension
(IRS) with 8 inches (203mm)
of travel
Independent Rear Suspension
(IRS) with 9 inches (228.6mm)
of travel
Integrated 2" Rear Receiver
12.4 ft. Turning Radius
Ground Clearance: 11 In.
(267 mm)
Ground Clearance
(Under Foot Platform):
12.25 In (311 mm)
FRAME/STYLED PARTS:
Hydroform Technology Frame
PC/ASA (JDLOY) Hood and
Fenders
OCCUPANT PROTECTION SYSTEM(OPS):
1.75 In. (44.4 mm) Steel Tubular
Overhead Structure
Multiple Passenger Handholds
3-pt. Seat Belts
SAE J2194 & OSHA ROPS Certified
OPERATOR STATION:
High-back Bucket Seats
7 In. (178 mm) Slide Rail
Adjustment on Driver's Seat
Hip Restraint Bars for Driver
and Passenger
Passenger Grab Handles
Glove Box
Storage Compartment Under Hood
Two Cup Holders
Instrument gauge with 4
wheel-drive indicator, RPM,
MPH/KPH, time of day, fuel
level, total miles and hour
meters
12v DC Outlet
FRONTAL PROTECTION:
Heavy-Duty Front Bumper
Integrated 2 Inch Front Receiver
Hitch
REAR PROTECTION:
Engine carrier close ut panel
DIMENSIONS(WITH OPS):
116 In. Long x 62 In.
Wide x 75 Inches High
PAYLOAD CAPACITY:
1,400 Lb (635 kg) Total Payload
Capacity which Includes:
200 Lb (91 kg) Driver,
200 Lb (91 kg) Passenger, and
1000 Lb (454 kg) in Cargo Box
Towing Capacity:
1,500 Lb (680kg)
CARGO BOX:
45 In. Long x 52 In. Wide x
12 In. Deep
(1,143mm x 1321mm x 305mm)
16.4cu. ft (.46 cu.m) Capacity
1000 Lbs (454 kg) Box Capacity
Tilting Box
Hinged (Bottom) Tailgate
Load Guard
TIRES:
Front: 26x9-12 Ancla XT
(Extreme Terrain Tires)
Rear: 26x11-12 Ancla XT
(Extreme Terrain Tires)
SAFETY VIDEO TAPE:
Safety and Operational DVD
Operators Manual
*Engine HP is Provided by the
Engine Manufacturer to be Used
for Comparison Purposes Only,
Actual Operating HP will be
Less.
Safety and Operational DVD
Operators Manual
*Engine HP is Provided by the
Engine Manufacturer to be Used
for Comparison Purposes Only,
Actual Operating HP will be
Less.

CODE	ATTACHMENT IDENTIFIER	DESCRIPTION	SUGGESTED LIST PRICE USD ($)

Select One Code From Each Required Category

BASE MACHINE

F.O.B. Janesville, Wisconsin

398KM	XUV 855D Power Steering Olive & Black *Base Machine Suggested List Price Does Not Include $400 USD Destination Charge.*	13,699.00

DESTINATION

0202	US/Canada	In Base Price
0230	Australia/New Zealand	Same Price

XUV 855D Power Steering Olive & Black
Continued

CODE	ATTACHMENT IDENTIFIER	DESCRIPTION	SUGGESTED LIST PRICE USD ($)
		DESTINATION Continued...	
0195		Mexico	Same Price
0250		All Other Countries	Same Price
0179		Europe	312.00
		WHEELS WITH TIRES (FOUR)	
1000		Black Steel Wheels Terra Hawk All Terrain Tires	Same Price
1001		Black Steel Wheels Ancla M-T Extreme Terrain Tire	In Base Price
1002		Black Alloy Wheels Maxxis Bighorn Radial Tires	823.00
1003		Silver Alloy Wheels Maxxis Bighorn Radial Tires	823.00
		DRIVER SEAT	
2000		21 In. Standard XUV HB Seat - Black	In Base Price
2001		Bench Seat - Black	Same Price
2002		High Performance Sport Seat - Black	296.00
		DELUXE CARGO BOX	
3000		Deluxe Cargo Box - with Paint	In Base Price
3001		Deluxe Cargo Box - with Polyurea	264.00
3002		Deluxe Cargo Box with Polyurea Liner, Brake, Tail, Reverse Lights & Light Protector	496.00
		OVERHEAD PROTECTION STRUCTURES (OPS)	
4000		OPS	In Base Price
4002		Deluxe Cab Frame/Including Windshield, Wiper, Electrical Kit and Rear Window	2,368.00
4008		OPS with Black Poly Roof	416.00
		POWER AND FRONT PROTECTION PACKAGE	
5000		Power and Front Protection Package Package Consists of: Power Lift, Heavy Duty Front Brushguard, Heavy Duty Front Fender Guard, Floor Mats *Package Priced at 10% discount.*	1,261.00
5010		Manual Lift *Must order 5010 option code when ordering 6000 option code.*	In Base Price
		REAR PROTECTION PACKAGE	
5100		Rear Protection Package Package Consists of: Rear Bumper, Bed Mat, Cargo Box Heavy Duty Fender Guards *Package Priced at 10% discount.*	494.00
5110		Less Rear Protection Package	In Base Price

XUV 855D Power Steering Olive & Black
Continued

CODE	ATTACHMENT IDENTIFIER	DESCRIPTION	SUGGESTED LIST PRICE USD ($)
		FRONT BRUSH GUARD	
6000		Heavy Duty Front Brushguard	233.00
6010		Less Front Brush Guard *Must order 6010 option code when ordering 5000 option code.*	In Base Price
		HOOD RACK	
6300		Front Hood Rack XUV *Must order 5000 or 6000 option code when ordering 6300 option code.*	226.00
6310		Less Front Hood Rack XUV *Must order 6310 option code when ordering 4002 option code.*	In Base Price
		Attachments-Order as Desired	
		Spanish North American Kit:	
9435		Spanish North American Operator's Manual and Decal Kit	No Charge
		ATTACHMENTS FOR FIELD CONVERSION	
		Blades:	
	LP25355	Heavy Duty POWERtach Blade - 72" *Available through Order Zone*	In Catalog
	LPPK140	POWERtach Deflector Shield *Available through Order Zone*	In Catalog
	LPPK120	POWERtach Markers *Available through Order Zone*	In Catalog
	LPPWBK72	POWERtach Poly Wear Bar *Available through Order Zone*	In Catalog
	LPPK150	POWERtach Rubber Squeegee *Available through Order Zone*	In Catalog
	LPPK160	POWERtach Skid Shoes *Available through Order Zone*	In Catalog
		Cabs/Roofs/Windshields:	
	BM23638	Air Cleaner Relocation Kit (Diesel) *Quiet Cab Kit for Deluxe Cab. Requires Noise Reduction Kit. Can also be used with Poly Cab for noise reduction.*	61.37
	BM23608	Cab Heater *Requires Cab Heater Fitting Kit.*	1,130.99
	VGB10548	Cab Heater Fitting Kit	23.54
	BM23498	Deluxe Cab Frame *Requires Seat Belt Kit, Glass Door Kit, Glass Windshield with Wiper, and Rear Window Kit to complete full Deluxe Cab.*	1,443.43
	VGB10505	Electrical Kit *Required for field installed Deluxe cabs.*	94.16

XUV 855D Power Steering Olive & Black
Continued

CODE	ATTACHMENT IDENTIFIER	DESCRIPTION	SUGGESTED LIST PRICE USD ($)
		ATTACHMENTS FOR FIELD CONVERSION Continued...	
	BM24560	Glass Door Kit - Deluxe Cab	2,427.83
	BM23507	Glass Windshield with Wiper - Deluxe Cab	874.19
	BM21656	Interior Light Kit - Deluxe Cab *Requires Electrical Kit.*	58.86
	BM23750	Noise Reduction Kit (Gas & Diesel) *Quiet Cab Kit for Deluxe Cab. Requires Air Cleaner Relocation Kit.*	373.43
	BM23742	OPS Full No-Scratch Windshield *Not compatible with Deluxe Cab Frame. Compatible with poly cab.*	531.79
	BM23741	OPS Full Poly Windshield *Not compatible with Deluxe Cab Frame. Compatible with poly cab.*	423.71
	BM23743	OPS Glass Windshield with Wiper *Not compatible with Deluxe Cab Frame. Compatible with poly cab.*	874.19
	BM23740	OPS Half Poly Windshield *Not compatible with Deluxe Cab Frame.*	339.19
	BM24115	OPS Poly Roof - Black	445.11
	BM24561	OPS Rear Panel *Part of the Poly cab, or can be mounted on the OPS alone. Requires full windshield, poly cab doors, and poly roof to complete poly cab.*	502.90
	LP10314	OPS Side Mirror - Left *Available through Order Zone.*	In Catalog
	LP10315	OPS Side Mirror - Right *Available through Order Zone.*	In Catalog
	LP93127	OPS Soft Roof - Black *Available through Order Zone*	In Catalog
	BM24117	Poly Cab Doors *Includes left and right doors, with side mirrors. Requires full windshield, OPS rear panel, and poly roof to complete poly cab.*	2,675.00
	BM23505	Rear Window Kit - Deluxe Cab	225.77
	BM23755	Seat Belt Kit *Required with Deluxe Cab Frame*	144.46
	BM23508	Side Mirrors - Deluxe Cab	129.47
	BM21646	Visor (1) Kit - Deluxe cab	70.61
	BM23534	Windshield Washer Fluid Kit - Deluxe Cab *Requires Electrical Kit.*	173.34
		Cargo Box Options / Storage:	
	BM23849	5 Gallon Pail Holder	38.51
	BM22772	Cargo Box Bed Mat	119.84

XUV 855D Power Steering Olive & Black
Continued

CODE	ATTACHMENT IDENTIFIER	DESCRIPTION	SUGGESTED LIST PRICE USD ($)
		ATTACHMENTS FOR FIELD CONVERSION Continued...	
	BM22769	Cargo Box Divider	191.53
	BM22811	Cargo Box FenderGuard *Requires Rear Bumper*	191.53
	BM23694	Cargo Box Power Lift Kit	858.14
	BM22774	Cargo Box Side Extension Kit	511.46
	LP19880	Deluxe Cargo Box Cover - Black *Available through Order Zone*	In Catalog
	BM22980	Front Hood Rack *Requires Front Brush Guard.*	241.81
	LP30320	Fuel Pack *Available through Order Zone*	In Catalog
	LP19878	Gator Gear Organizer - Black *Available through Order Zone*	In Catalog
	LP19886	Gator Tool Box *Contact Dealer for pricing.*	In Catalog
	LP93117	OPS Overhead Organizer - Black *Available through Order Zone*	In Catalog
	LP46485	Ratcheting Rhino Grip *Available through Order Zone.*	In Catalog
	LP25929	Rhino Grip XL - Double *Available through Order Zone.*	In Catalog
	LP25928	Rhino Grip XL - Single *Available through Order Zone.*	In Catalog
	LP19882	Saw Press Bracket *Available through Order Zone*	In Catalog
	BM22775	Side Tool Rack	304.96
	LP93207	Soft Rear Screen and Organizer - Black *Available through Order Zone*	In Catalog
		Carts / Hitches:	
	LPPCT10LXATV	10AT Cart *Available through Order Zone*	In Catalog
	LPPCT17ATJD	17AT Cart *Available through Order Zone.*	In Catalog
	LPUT21JD	21 Steel Utility Cart *Available through Order Zone*	In Catalog
	PM05101	Ball Mount - 1.875 in. (48mm)	See Parts
	PM05201	Ball Mount - 2 in. (51mm)	See Parts

XUV 855D Power Steering Olive & Black
Continued

CODE	ATTACHMENT IDENTIFIER	DESCRIPTION	SUGGESTED LIST PRICE USD ($)
		ATTACHMENTS FOR FIELD CONVERSION Continued...	
	BM22290	Drawbar - 2 in. (51mm)	38.51
		Custom & High Performance:	
	BM24021	Fox ® High Performance Racing Shox	1,758.01
	BM22703	Seat-Belt Comfort Strap (2) *Also compatible with Deluxe Cab.*	77.04
	BM24453	Stereo Mounting Kit *Includes mounting kit only; must choose one of the following three head units to have complete stereo:* *Radio, Heavy Duty AM / FM / WB / AUX (SWJHD1120)* *Radio, Heavy Duty AM / FM / WB / SAT / I-POD (SWJHD1620)* *Radio, AM / FM / WB / CD / AUX / SAT Ready (SWJHD3620)* *Must order head unit through Parts. Stereo Mounting Kit not compatible with Deluxe Cab.*	521.09
		Engine:	
	AM882530	Adaptor Parts for Engine Coolant Heater	See Parts
	AR87167	Engine Coolant Heater (110 Volt) *Requires adapter parts for engine coolant heater. Requires AM134805 Engine Block Heater Adapter.*	See Parts
		Hunting / Camo:	
	LP19884	Cargo Box Gun Mount - Black *Available through Order Zone*	In Catalog
	LP10319	Gun Mount Kit - Overhead *Includes 2 Gun Boot VI.* *Available through Order Zone*	In Catalog
	LP93103	Vehicle Cover, Cab / ROPS - Camo *Fits all Models Equipped with OPS and Deluxe Cab Structure.* *Available through Order Zone*	In Catalog
		Lights / Signals:	
	BM24726	Backup Alarm	74.56
	BM24013	Beacon Light *Requires OPS Poly Roof and OPS Switch Bank.*	219.36
	BM21649	Beacon Light Kit - Deluxe Cab *Requires Electrical Kit.*	371.29
	BM24591	Brake / Tail Light Kit	160.50
	BM24586	Deluxe Signal Light Kit *Includes Turn Signals (Front & Rear), 4-Way Flashers, Brake, Tail & Reverse Lights.*	374.50
	BM24587	Deluxe Signal Light Kit *Includes Turn Signals (Front & Rear) and 4-Way Flashers. Compatible with the 825i and 825i S4 vehicles equipped with the 3000 cargo box option code or 625i, 855D and 855D S4 vehicles equipped with the 3002 Cargo Box option code which already includes the brake & tail lights.*	171.20
	BM21651	Front Light Kit - Deluxe Cab *Requires Electrical Kit.*	293.19

XUV 855D Power Steering Olive & Black
Continued

CODE	ATTACHMENT IDENTIFIER	DESCRIPTION	SUGGESTED LIST PRICE USD ($)
		ATTACHMENTS FOR FIELD CONVERSION Continued...	
	BM23442	Hella HID Sport Driving Lights *Requires OPS Switch Bank for OPS or poly roof mounting, or Front Brushguard for bumper mounting.*	935.19
	BM24108	Hella Performance Spot Lights *Requires OPS Switch Bank for OPS or poly roof mounting, or Front Brushguard for bumper mounting.*	343.47
	BM23370	Horn Kit	97.37
	BM24090	Long Range Light Kit *Can also mount behind front bumper cover directly to frame.* *Requires OPS Switch Bank for OPS or poly roof mounting, or Front Brushguard for brushguard mounting.*	191.53
	BM24016	Mid-Range Light Kit *Requires OPS Switch Bank for OPS or poly roof mounting. Can be installed on the front or rear of OPS or roof.*	123.06
	BM24089	OPS Switch Bank *Accommodates up to three separate OPS accessory kits.*	67.41
	BM21652	Rear Light Kit - Deluxe Cab *Requires Electrical Kit.*	217.21
		Protection:	
	BM23727	Deflector Plate	55.64
	BM24282	Floormat *Also front floormat on S4*	78.11
	BM24463	Front CV Guards	114.49
	BM22987	Heavy Duty Fender Guard *Compatible with Standard Front Bumper.*	215.07
	BM22841	Heavy Duty Front Brush Guard	249.31
	BM22767	Heavy Duty Rear Bumper	236.47
	BM22962	Rear CV Guards	114.49
	BM22773	Tail Light Protectors	89.89
	LP93107	Vehicle Cover, Cab / ROPS - Black *Available through Order Zone.*	In Catalog
		Seats / Wheels / Tires:	
	LP40897	Camoplast Tracks (855D) *Available through Order Zone*	In Catalog
		Sprayers / Pressure Washers:	
	LP33597	25 Gallon Bed Sprayer *Available through Order Zone*	In Catalog
	LP19490	25 Gallon Portable Sprayer *Available through Order Zone*	In Catalog

XUV 855D Power Steering Olive & Black
Continued

CODE	ATTACHMENT IDENTIFIER	DESCRIPTION	SUGGESTED LIST PRICE USD ($)
		ATTACHMENTS FOR FIELD CONVERSION Continued...	
	LP20852	45 Gallon Bed Sprayer *Available through Order Zone*	In Catalog
	LP22908	45 Gallon High Performance Sprayer *Available through Order Zone*	In Catalog
	LP20485	45 Gallon Tow-Behind Sprayer *Available through Order Zone*	In Catalog
	LP20853	90 Gallon Bed Sprayer *Available through Order Zone*	In Catalog
	LP22909	90 Gallon High Performance Bed Sprayer *Available through Order Zone*	In Catalog
	LPGP2700GH	GatorPal High Pressure Washer (2700 psi, Honda engine) *Contact Dealer for pricing.*	In Catalog
	LPGP2700GS	GatorPal High Pressure Washer (2700 psi, Subaru engine) *Contact Dealer for pricing.*	In Catalog
	LPGP3000GH	GatorPal High Pressure Washer (3000 psi, Honda engine) *Contact Dealer for pricing.*	In Catalog
	LPGP3000GS	GatorPal High Pressure Washer (3000 psi, Subaru engine) *Contact Dealer for pricing.*	In Catalog
	LP22885	HP 150 in. Precision Boom *Compatible with all High Performance Sprayers* *Available through Order Zone*	In Catalog
	LP39963	HP 45 Gallon Sprayer - Tow Behind *Available through Order Zone*	In Catalog
	LP22884	HP Boomless Nozzles *Compatible with all High Performance Sprayers* *Available through Order Zone*	In Catalog
	LP22911	HP Standard Gator Boom *Compatible with all High Performance Sprayers* *Available through Order Zone*	In Catalog
		Winch:	
	BM24443	Warn® Winch (3000 lb) *Requires 2-Inch Receiver Multi-Mount Kit for Front or Rear Receiver Mount.*	770.40
	BM23105	Winch - 2 Inch Receiver Multi-Mount Kit	225.77
	BM21392	Winch Accessories Kit *Accessory kit includes 1/2" shackle, 9,000 lbs. maximum capacity snatch block, (2) 1"x8' tree trunk protectors, and (1) pair of WARN winching gloves.*	129.47

SERVICE CONTRACTS - RESIDENTIAL OWNERS/USE

Visit http://www.JohnDeere.com/ServicePlans for more information on John Deere Service Contracts. May not be Available in Parts of the U.S., Not Available in Canada. Price may vary due to driving distance and/or time from machine to dealership location.

XUV 855D Power Steering Olive & Black

Continued

CODE	ATTACHMENT IDENTIFIER	DESCRIPTION	SUGGESTED LIST PRICE USD ($)
		SERVICE CONTRACTS - RESIDENTIAL OWNERS/USE Continued...	
		John Deere Extended Service Plan - 2-Year Option *Available for T-Series, HPX and XUV utility vehicles only.)* *2-year extended service plan. (1 year of extended service protection);* *2-years of warranty transportation.*	399.99
		John Deere Extended Service Plan - 3-Year Option *3-year extended service plan. (2 years of extended service protection);* *3-years of warranty transportation.*	569.99

XUV 855D Camo

Equipment for Base Machine

ENGINE:
22.8 Engine HP*(854cc),
Three Cylinder, Liquid-cooled,
Overhead Valves
4-Cycle Diesel
Full Pressure Lubrication
System
Replaceable Single Dry-Type
Element Air Cleaner with
Remote Intake
7.0 Gallon (26.49L) Fuel
Capacity
Solid-state Ignition (12V)
Spark-arresting Muffler
ELECTRICAL:
Electric Start
55 Amp 3-Phase Alternator
480 CCA Battery
Two 37.5 Watt Halogen
Headlights
TRANSAXLE/TRANSMISSION:
Continuously Variable
Transmission
Full Clutch Enclosure
Two-speed Transaxle
Operator Selectable 4WD
32 mph (51 kph) Maximum
Forward Speed
On-demand True Four-Wheel
Drive System
Auto Locking Front Differential
Traction Assist
Front and Rear Hydraulic Disk
Brakes
Hand-operated Sealed Wet Disk
Park brake
1.3 In. (27mm) Forged Rear
Axles
STEERING/SUSPENSION:
Rack and Pinion Steering
Independent Front Suspension
(IRS) with 8 inches (203mm)
of travel
Independent Rear Suspension
(IRS) with 9 inches (228.6mm)
of travel
Integrated 2" Rear Receiver
12.4 ft. Turning Radius
Ground Clearance: 11 In.
(267 mm)
Ground Clearance
(Under Foot Platform):
12.25 In (311 mm)
FRAME/STYLED PARTS:
Hydroform Technology Frame
PC/ASA (JDLOY) Hood and
Fenders
OCCUPANT PROTECTION SYSTEM(OPS):
1.75 In. (44.4 mm) Steel Tubular
Overhead Structure
Multiple Passenger Handholds
3-pt. Seat Belts
SAE J2194 & OSHA ROPS Certified
OPERATOR STATION:
High-back Bucket Seats
7 In. (178 mm) Slide Rail
Adjustment on Driver's Seat
Hip Restraint Bars for Driver
and Passenger
Passenger Grab Handles
Glove Box
Storage Compartment Under Hood
Two Cup Holders
Instrument gauge with 4
wheel-drive indicator, RPM,
MPH/KPH, time of day, fuel
level, total miles and hour
meters
12v DC Outlet
FRONTAL PROTECTION:
Heavy-Duty Front Bumper
Integrated 2 Inch Front Receiver
Hitch
REAR PROTECTION:
Engine carrier close ut panel
DIMENSIONS(WITH OPS):
116 In. Long x 62 In.
Wide x 75 Inches High
PAYLOAD CAPACITY:
1,400 Lb (635 kg) Total Payload
Capacity which Includes:
200 Lb (91 kg) Driver,
200 Lb (91 kg) Passenger, and
1000 Lb (454 kg) in Cargo Box
Towing Capacity:
1,500 Lb (680kg)
CARGO BOX:
45 In. Long x 52 In. Wide x
12 In. Deep
(1,143mm x 1321mm x 305mm)
16.4cu. ft (.46 cu.m) Capacity
1000 Lbs (454 kg) Box Capacity
Tilting Box
Hinged (Bottom) Tailgate
Load Guard
TIRES:
Front: 26x9-12 Ancla XT
(Extreme Terrain Tires)
Rear: 26x11-12 Ancla XT
(Extreme Terrain Tires)
SAFETY VIDEO TAPE:
Safety and Operational DVD
Operators Manual
*Engine HP is Provided by the
Engine Manufacturer to be Used
for Comparison Purposes Only,
Actual Operating HP will be
Less.

CODE	ATTACHMENT IDENTIFIER	DESCRIPTION	SUGGESTED LIST PRICE USD ($)

Select One Code From Each Required Category

BASE MACHINE

F.O.B. Janesville, Wisconsin

398HM	XUV 855D Camo *Base Machine Suggested List Price Does Not Include $400 USD Destination Charge.*	13,149.00

DESTINATION

0202	US/Canada	In Base Price
0230	Australia/New Zealand	Same Price
0195	Mexico	Same Price

XUV 855D Camo
Continued

CODE	ATTACHMENT IDENTIFIER	DESCRIPTION	SUGGESTED LIST PRICE USD ($)
		DESTINATION Continued...	
0250		All Other Countries	Same Price
0179		Europe	312.00
		WHEELS WITH TIRES (FOUR)	
1000		Black Steel Wheels Terra Hawk All Terrain Tires	Same Price
1001		Black Steel Wheels Ancla M-T Extreme Terrain Tire	In Base Price
1002		Black Alloy Wheels Maxxis Bighorn Radial Tires	823.00
1003		Silver Alloy Wheels Maxxis Bighorn Radial Tires	823.00
		DRIVER SEAT	
2000		21 In. Standard XUV HB Seat - Black	In Base Price
2001		Bench Seat - Black	Same Price
2002		High Performance Sport Seat - Black	296.00
		DELUXE CARGO BOX	
3000		Deluxe Cargo Box - with Paint	In Base Price
3001		Deluxe Cargo Box - with Polyurea	264.00
3002		Deluxe Cargo Box with Polyurea Liner, Brake, Tail, Reverse Lights & Light Protector	496.00
		OVERHEAD PROTECTION STRUCTURES (OPS)	
4000		OPS	In Base Price
4002		Deluxe Cab Frame/Including Windshield, Wiper, Electrical Kit and Rear Window	2,368.00
4008		OPS with Black Poly Roof	416.00
		POWER AND FRONT PROTECTION PACKAGE	
5000		Power and Front Protection Package Package Consists of: Power Lift, Heavy Duty Front Brushguard, Heavy Duty Front Fender Guard, Floor Mats *Package Priced at 10% discount.*	1,261.00
5010		Manual Lift *Must order 5010 option code when ordering 6000 option code.*	In Base Price
		REAR PROTECTION PACKAGE	
5100		Rear Protection Package Package Consists of: Rear Bumper, Bed Mat, Cargo Box Heavy Duty Fender Guards *Package Priced at 10% discount.*	494.00
5110		Less Rear Protection Package	In Base Price
		FRONT BRUSH GUARD	

XUV 855D Camo
Continued

CODE	ATTACHMENT IDENTIFIER	DESCRIPTION	SUGGESTED LIST PRICE USD ($)
		FRONT BRUSH GUARD Continued...	
6000		Heavy Duty Front Brushguard	233.00
6010		Less Front Brush Guard *Must order 6010 option code when ordering 5000 option code.*	In Base Price
		HOOD RACK	
6300		Front Hood Rack XUV *Must order 5000 or 6000 option code when ordering 6300 option code.*	226.00
6310		Less Front Hood Rack XUV *Must order 6310 option code when ordering 4002 option code.*	In Base Price
		Attachments-Order as Desired	
		Spanish North American Kit:	
9435		Spanish North American Operator's Manual and Decal Kit	No Charge
		ATTACHMENTS FOR FIELD CONVERSION	
		Blades:	
	LP25355	Heavy Duty POWERtach Blade - 72" *Available through Order Zone*	In Catalog
	LPPK140	POWERtach Deflector Shield *Available through Order Zone*	In Catalog
	LPPK120	POWERtach Markers *Available through Order Zone*	In Catalog
	LPPWBK72	POWERtach Poly Wear Bar *Available through Order Zone*	In Catalog
	LPPK150	POWERtach Rubber Squeegee *Available through Order Zone*	In Catalog
	LPPK160	POWERtach Skid Shoes *Available through Order Zone*	In Catalog
		Cabs/Roofs/Windshields:	
	BM23638	Air Cleaner Relocation Kit (Diesel) *Quiet Cab Kit for Deluxe Cab. Requires Noise Reduction Kit. Can also be used with Poly Cab for noise reduction.*	61.37
	BM23608	Cab Heater *Requires Cab Heater Fitting Kit.*	1,130.99
	VGB10548	Cab Heater Fitting Kit	23.54
	BM23498	Deluxe Cab Frame *Requires Seat Belt Kit, Glass Door Kit, Glass Windshield with Wiper, and Rear Window Kit to complete full Deluxe Cab.*	1,443.43
	VGB10505	Electrical Kit *Required for field installed Deluxe cabs.*	94.16

XUV 855D Camo
Continued

CODE	ATTACHMENT IDENTIFIER	DESCRIPTION	SUGGESTED LIST PRICE USD ($)
		ATTACHMENTS FOR FIELD CONVERSION Continued...	
	BM24560	Glass Door Kit - Deluxe Cab	2,427.83
	BM23507	Glass Windshield with Wiper - Deluxe Cab	874.19
	BM21656	Interior Light Kit - Deluxe Cab *Requires Electrical Kit.*	58.86
	BM23750	Noise Reduction Kit (Gas & Diesel) *Quiet Cab Kit for Deluxe Cab. Requires Air Cleaner Relocation Kit.*	373.43
	BM23742	OPS Full No-Scratch Windshield *Not compatible with Deluxe Cab Frame. Compatible with poly cab.*	531.79
	BM23741	OPS Full Poly Windshield *Not compatible with Deluxe Cab Frame. Compatible with poly cab.*	423.71
	BM23743	OPS Glass Windshield with Wiper *Not compatible with Deluxe Cab Frame. Compatible with poly cab.*	874.19
	BM23740	OPS Half Poly Windshield *Not compatible with Deluxe Cab Frame.*	339.19
	BM24115	OPS Poly Roof - Black	445.11
	BM24320	OPS Poly Roof - Camo	802.50
	BM24561	OPS Rear Panel *Part of the Poly cab, or can be mounted on the OPS alone. Requires full windshield, poly cab doors, and poly roof to complete poly cab.*	502.90
	LP10314	OPS Side Mirror - Left *Available through Order Zone.*	In Catalog
	LP10315	OPS Side Mirror - Right *Available through Order Zone.*	In Catalog
	LP93127	OPS Soft Roof - Black *Available through Order Zone*	In Catalog
	LP93123	OPS Soft Roof - Camo *Available through Order Zone*	In Catalog
	BM24117	Poly Cab Doors *Includes left and right doors, with side mirrors. Requires full windshield, OPS rear panel, and poly roof to complete poly cab.*	2,675.00
	BM23505	Rear Window Kit - Deluxe Cab	225.77
	BM23755	Seat Belt Kit *Required with Deluxe Cab Frame*	144.46
	BM23508	Side Mirrors - Deluxe Cab	129.47
	BM21646	Visor (1) Kit - Deluxe cab	70.61
	BM23534	Windshield Washer Fluid Kit - Deluxe Cab *Requires Electrical Kit.*	173.34

XUV 855D Camo
Continued

CODE	ATTACHMENT IDENTIFIER	DESCRIPTION	SUGGESTED LIST PRICE USD ($)
		ATTACHMENTS FOR FIELD CONVERSION Continued...	
		Cargo Box Options / Storage:	
	BM23849	5 Gallon Pail Holder	38.51
	BM22772	Cargo Box Bed Mat	119.84
	BM22769	Cargo Box Divider	191.53
	BM22811	Cargo Box FenderGuard *Requires Rear Bumper*	191.53
	BM23694	Cargo Box Power Lift Kit	858.14
	BM22774	Cargo Box Side Extension Kit	511.46
	LP19880	Deluxe Cargo Box Cover - Black *Available through Order Zone*	In Catalog
	BM22980	Front Hood Rack *Requires Front Brush Guard.*	241.81
	LP30320	Fuel Pack *Available through Order Zone*	In Catalog
	LP19878	Gator Gear Organizer - Black *Available through Order Zone*	In Catalog
	LP19886	Gator Tool Box *Contact Dealer for pricing.*	In Catalog
	LP93117	OPS Overhead Organizer - Black *Available through Order Zone*	In Catalog
	LP93113	OPS Overhead Organizer - Camo *Available through Order Zone*	In Catalog
	LP46485	Ratcheting Rhino Grip *Available through Order Zone.*	In Catalog
	LP25929	Rhino Grip XL - Double *Available through Order Zone.*	In Catalog
	LP25928	Rhino Grip XL - Single *Available through Order Zone.*	In Catalog
	LP19882	Saw Press Bracket *Available through Order Zone*	In Catalog
	BM22775	Side Tool Rack	304.96
	LP93207	Soft Rear Screen and Organizer - Black *Available through Order Zone*	In Catalog
		Carts / Hitches:	
	LPPCT10LXATV	10AT Cart *Available through Order Zone*	In Catalog
	LPPCT17ATJD	17AT Cart *Available through Order Zone.*	In Catalog

XUV 855D Camo

Continued

CODE	ATTACHMENT IDENTIFIER	DESCRIPTION	SUGGESTED LIST PRICE USD ($)
		ATTACHMENTS FOR FIELD CONVERSION Continued...	
	LPUT21JD	21 Steel Utility Cart *Available through Order Zone*	In Catalog
	PM05101	Ball Mount - 1.875 in. (48mm)	See Parts
	PM05201	Ball Mount - 2 in. (51mm)	See Parts
	BM22290	Drawbar - 2 in. (51mm)	38.51
		Custom & High Performance:	
	BM24021	Fox ® High Performance Racing Shox	1,758.01
	BM22703	Seat-Belt Comfort Strap (2) *Also compatible with Deluxe Cab.*	77.04
	BM24453	Stereo Mounting Kit *Includes mounting kit only; must choose one of the following three head units to have complete stereo:* *Radio, Heavy Duty AM / FM / WB / AUX (SWJHD1120)* *Radio, Heavy Duty AM / FM / WB / SAT / I-POD (SWJHD1620)* *Radio, AM / FM / WB / CD / AUX / SAT Ready (SWJHD3620)* *Must order head unit through Parts. Stereo Mounting Kit not compatible with Deluxe Cab.*	521.09
		Engine:	
	AM882530	Adaptor Parts for Engine Coolant Heater	See Parts
	AR87167	Engine Coolant Heater (110 Volt) *Requires adapter parts for engine coolant heater. Requires AM134805 Engine Block Heater Adapter.*	See Parts
		Hunting / Camo:	
	LP19884	Cargo Box Gun Mount - Black *Available through Order Zone*	In Catalog
	LP19879	Deluxe Cargo Box Cover- Camo *Available through Order Zone*	In Catalog
	LP19877	Gator Gear Organizer (Camo) *Available through Order Zone*	In Catalog
	LP10319	Gun Mount Kit - Overhead *Includes 2 Gun Boot VI.* *Available through Order Zone*	In Catalog
	LP93103	Vehicle Cover, Cab / ROPS - Camo *Fits all Models Equipped with OPS and Deluxe Cab Structure.* *Available through Order Zone*	In Catalog
		Lights / Signals:	
	BM24726	Backup Alarm	74.56
	BM24013	Beacon Light *Requires OPS Poly Roof and OPS Switch Bank.*	219.36
	BM21649	Beacon Light Kit - Deluxe Cab *Requires Electrical Kit.*	371.29
	BM24591	Brake / Tail Light Kit	160.50

XUV 855D Camo

Continued

CODE	ATTACHMENT IDENTIFIER	DESCRIPTION	SUGGESTED LIST PRICE USD ($)
		ATTACHMENTS FOR FIELD CONVERSION Continued...	
	BM24586	Deluxe Signal Light Kit *Includes Turn Signals (Front & Rear), 4-Way Flashers, Brake, Tail & Reverse Lights.*	374.50
	BM24587	Deluxe Signal Light Kit *Includes Turn Signals (Front & Rear) and 4-Way Flashers. Compatible with the 825i and 825i S4 vehicles equipped with the 3000 cargo box option code or 625i, 855D and 855D S4 vehicles equipped with the 3002 Cargo Box option code which already includes the brake & tail lights.*	171.20
	BM21651	Front Light Kit - Deluxe Cab *Requires Electrical Kit.*	293.19
	BM23442	Hella HID Sport Driving Lights *Requires OPS Switch Bank for OPS or poly roof mounting, or Front Brushguard for bumper mounting.*	935.19
	BM24108	Hella Performance Spot Lights *Requires OPS Switch Bank for OPS or poly roof mounting, or Front Brushguard for bumper mounting.*	343.47
	BM23370	Horn Kit	97.37
	BM24090	Long Range Light Kit *Can also mount behind front bumper cover directly to frame.* *Requires OPS Switch Bank for OPS or poly roof mounting, or Front Brushguard for brushguard mounting.*	191.53
	BM24016	Mid-Range Light Kit *Requires OPS Switch Bank for OPS or poly roof mounting. Can be installed on the front or rear of OPS or roof.*	123.06
	BM24089	OPS Switch Bank *Accommodates up to three separate OPS accessory kits.*	67.41
	BM21652	Rear Light Kit - Deluxe Cab *Requires Electrical Kit.*	217.21
		Protection:	
	BM23727	Deflector Plate	55.64
	BM24282	Floormat *Also front floormat on S4*	78.11
	BM24463	Front CV Guards	114.49
	BM22987	Heavy Duty Fender Guard *Compatible with Standard Front Bumper.*	215.07
	BM22841	Heavy Duty Front Brush Guard	249.31
	BM22767	Heavy Duty Rear Bumper	236.47
	BM22962	Rear CV Guards	114.49
	BM22773	Tail Light Protectors	89.89
	LP93107	Vehicle Cover, Cab / ROPS - Black *Available through Order Zone.*	In Catalog

XUV 855D Camo
Continued

CODE	ATTACHMENT IDENTIFIER	DESCRIPTION	SUGGESTED LIST PRICE USD ($)
		ATTACHMENTS FOR FIELD CONVERSION Continued...	
		Seats / Wheels / Tires:	
	LP40897	Camoplast Tracks (855D) *Available through Order Zone*	In Catalog
		Sprayers / Pressure Washers:	
	LP33597	25 Gallon Bed Sprayer *Available through Order Zone*	In Catalog
	LP19490	25 Gallon Portable Sprayer *Available through Order Zone*	In Catalog
	LP20852	45 Gallon Bed Sprayer *Available through Order Zone*	In Catalog
	LP22908	45 Gallon High Performance Sprayer *Available through Order Zone*	In Catalog
	LP20485	45 Gallon Tow-Behind Sprayer *Available through Order Zone*	In Catalog
	LP20853	90 Gallon Bed Sprayer *Available through Order Zone*	In Catalog
	LP22909	90 Gallon High Performance Bed Sprayer *Available through Order Zone*	In Catalog
	LPGP2700GH	GatorPal High Pressure Washer (2700 psi, Honda engine) *Contact Dealer for pricing.*	In Catalog
	LPGP2700GS	GatorPal High Pressure Washer (2700 psi, Subaru engine) *Contact Dealer for pricing.*	In Catalog
	LPGP3000GH	GatorPal High Pressure Washer (3000 psi, Honda engine) *Contact Dealer for pricing.*	In Catalog
	LPGP3000GS	GatorPal High Pressure Washer (3000 psi, Subaru engine) *Contact Dealer for pricing.*	In Catalog
	LP22885	HP 150 in. Precision Boom *Compatible with all High Performance Sprayers* *Available through Order Zone*	In Catalog
	LP39963	HP 45 Gallon Sprayer - Tow Behind *Available through Order Zone*	In Catalog
	LP22884	HP Boomless Nozzles *Compatible with all High Performance Sprayers* *Available through Order Zone*	In Catalog
	LP22911	HP Standard Gator Boom *Compatible with all High Performance Sprayers* *Available through Order Zone*	In Catalog
		Winch:	
	BM24443	Warn® Winch (3000 lb) *Requires 2-Inch Receiver Multi-Mount Kit for Front or Rear Receiver Mount.*	770.40
	BM23105	Winch - 2 Inch Receiver Multi-Mount Kit	225.77

XUV 855D Camo

Continued

CODE	ATTACHMENT IDENTIFIER	DESCRIPTION	SUGGESTED LIST PRICE USD ($)
		ATTACHMENTS FOR FIELD CONVERSION Continued...	
	BM21392	Winch Accessories Kit *Accessory kit includes 1/2" shackle, 9,000 lbs. maximum capacity snatch block, (2) 1"x8' tree trunk protectors, and (1) pair of WARN winching gloves.*	129.47
		SERVICE CONTRACTS - RESIDENTIAL OWNERS/USE	
		Visit http://www.JohnDeere.com/ServicePlans for more information on John Deere Service Contracts. May not be Available in Parts of the U.S., Not Available in Canada. Price may vary due to driving distance and/or time from machine to dealership location.	
		John Deere Extended Service Plan - 2-Year Option *Available for T-Series, HPX and XUV utility vehicles only.)* *2-year extended service plan. (1 year of extended service protection);* *2-years of warranty transportation.*	399.99
		John Deere Extended Service Plan - 3-Year Option *3-year extended service plan. (2 years of extended service protection);* *3-years of warranty transportation.*	569.99

XUV 855D Power Steering Camo

Equipment for Base Machine

ENGINE:
22.8 Engine HP*(854cc),
Three Cylinder, Liquid-cooled,
Overhead Valves
4-Cycle Diesel
Full Pressure Lubrication
System
Replaceable Single Dry-Type
Element Air Cleaner with
Remote Intake
7.0 Gallon (26.49L) Fuel
Capacity
Solid-state Ignition (12V)
Spark-arresting Muffler
ELECTRICAL:
Electric Start
55 Amp 3-Phase Alternator
480 CCA Battery
Two 37.5 Watt Halogen
Headlights
TRANSAXLE/TRANSMISSION:
Continuously Variable
Transmission
Full Clutch Enclosure
Two-speed Transaxle
Operator Selectable 4WD
32 mph (51 kph) Maximum
Forward Speed
On-demand True Four-Wheel
Drive System
Auto Locking Front Differential
Traction Assist
Front and Rear Hydraulic Disk
Brakes
Hand-operated Sealed Wet Disk
Park brake
1.3 In. (27mm) Forged Rear
Axles
STEERING/SUSPENSION:
Power Steering
Rack and Pinion Steering
Independent Front Suspension
(IRS) with 8 inches (203mm)
of travel
Independent Rear Suspension
(IRS) with 9 inches (228.6mm)
of travel
Integrated 2" Rear Receiver
12.4 ft. Turning Radius
Ground Clearance: 11 In.
(267 mm)
Ground Clearance
(Under Foot Platform):
12.25 In (311 mm)
FRAME/STYLED PARTS:
Hydroform Technology Frame
PC/ASA (JDLOY) Hood and
Fenders
OCCUPANT PROTECTION SYSTEM(OPS):
1.75 In. (44.4 mm) Steel Tubular
Overhead Structure
Multiple Passenger Handholds
3-pt. Seat Belts
SAE J2194 & OSHA ROPS Certified
OPERATOR STATION:
High-back Bucket Seats
7 In. (178 mm) Slide Rail
Adjustment on Driver's Seat
Hip Restraint Bars for Driver
and Passenger
Passenger Grab Handles
Glove Box
Storage Compartment Under Hood
Two Cup Holders
Instrument gauge with 4
wheel-drive indicator, RPM,
MPH/KPH, time of day, fuel
level, total miles and hour
meters
12v DC Outlet
FRONTAL PROTECTION:
Heavy-Duty Front Bumper
Integrated 2 Inch Front Receiver
Hitch
REAR PROTECTION:
Engine carrier close ut panel
DIMENSIONS(WITH OPS):
116 In. Long x 62 In.
Wide x 75 Inches High
PAYLOAD CAPACITY:
1,400 Lb (635 kg) Total Payload
Capacity which Includes:
200 Lb (91 kg) Driver,
200 Lb (91 kg) Passenger, and
1000 Lb (454 kg) in Cargo Box
Towing Capacity:
1,500 Lb (680kg)
CARGO BOX:
45 In. Long x 52 In. Wide x
12 In. Deep
(1,143mm x 1321mm x 305mm)
16.4cu. ft (.46 cu.m) Capacity
1000 Lbs (454 kg) Box Capacity
Tilting Box
Hinged (Bottom) Tailgate
Load Guard
TIRES:
Front: 26x9-12 Ancla XT
(Extreme Terrain Tires)
Rear: 26x11-12 Ancla XT
(Extreme Terrain Tires)
SAFETY VIDEO TAPE:
Safety and Operational DVD
Operators Manual
*Engine HP is Provided by the
Engine Manufacturer to be Used
for Comparison Purposes Only,
Actual Operating HP will be
Less.
Safety and Operational DVD
Operators Manual
*Engine HP is Provided by the
Engine Manufacturer to be Used
for Comparison Purposes Only,
Actual Operating HP will be
Less.

CODE	ATTACHMENT IDENTIFIER	DESCRIPTION	SUGGESTED LIST PRICE USD ($)

Select One Code From Each Required Category

BASE MACHINE

F.O.B. Janesville, Wisconsin

398LM	XUV 855D Power Steering Camo *Base Machine Suggested List Price Does Not Include $400 USD Destination Charge.*	14,149.00

DESTINATION

0202	US/Canada	In Base Price
0230	Australia/New Zealand	Same Price

XUV 855D Power Steering Camo
Continued

CODE	ATTACHMENT IDENTIFIER	DESCRIPTION	SUGGESTED LIST PRICE USD ($)
		DESTINATION Continued...	
0195		Mexico	Same Price
0250		All Other Countries	Same Price
0179		Europe	312.00
		WHEELS WITH TIRES (FOUR)	
1000		Black Steel Wheels Terra Hawk All Terrain Tires	Same Price
1001		Black Steel Wheels Ancla M-T Extreme Terrain Tire	In Base Price
1002		Black Alloy Wheels Maxxis Bighorn Radial Tires	823.00
1003		Silver Alloy Wheels Maxxis Bighorn Radial Tires	823.00
		DRIVER SEAT	
2000		21 In. Standard XUV HB Seat - Black	In Base Price
2001		Bench Seat - Black	Same Price
2002		High Performance Sport Seat - Black	296.00
		DELUXE CARGO BOX	
3000		Deluxe Cargo Box - with Paint	In Base Price
3001		Deluxe Cargo Box - with Polyurea	264.00
3002		Deluxe Cargo Box with Polyurea Liner, Brake, Tail, Reverse Lights & Light Protector	496.00
		OVERHEAD PROTECTION STRUCTURES (OPS)	
4000		OPS	In Base Price
4002		Deluxe Cab Frame/Including Windshield, Wiper, Electrical Kit and Rear Window	2,368.00
4008		OPS with Black Poly Roof	416.00
		POWER AND FRONT PROTECTION PACKAGE	
5000		Power and Front Protection Package Package Consists of: Power Lift, Heavy Duty Front Brushguard, Heavy Duty Front Fender Guard, Floor Mats *Package Priced at 10% discount.*	1,261.00
5010		Manual Lift *Must order 5010 option code when ordering 6000 option code.*	In Base Price
		REAR PROTECTION PACKAGE	
5100		Rear Protection Package Package Consists of: Rear Bumper, Bed Mat, Cargo Box Heavy Duty Fender Guards *Package Priced at 10% discount.*	494.00
5110		Less Rear Protection Package	In Base Price

XUV 855D Power Steering Camo

Continued

CODE	ATTACHMENT IDENTIFIER	DESCRIPTION	SUGGESTED LIST PRICE USD ($)
		FRONT BRUSH GUARD	
6000		Heavy Duty Front Brushguard	233.00
6010		Less Front Brush Guard *Must order 6010 option code when ordering 5000 option code.*	In Base Price
		HOOD RACK	
6300		Front Hood Rack XUV *Must order 5000 or 6000 option code when ordering 6300 option code.*	226.00
6310		Less Front Hood Rack XUV *Must order 6310 option code when ordering 4002 option code.*	In Base Price
		Attachments-Order as Desired	
		Spanish North American Kit:	
9435		Spanish North American Operator's Manual and Decal Kit	No Charge
		ATTACHMENTS FOR FIELD CONVERSION	
		Blades:	
	LP25355	Heavy Duty POWERtach Blade - 72" *Available through Order Zone*	In Catalog
	LPPK140	POWERtach Deflector Shield *Available through Order Zone*	In Catalog
	LPPK120	POWERtach Markers *Available through Order Zone*	In Catalog
	LPPWBK72	POWERtach Poly Wear Bar *Available through Order Zone*	In Catalog
	LPPK150	POWERtach Rubber Squeegee *Available through Order Zone*	In Catalog
	LPPK160	POWERtach Skid Shoes *Available through Order Zone*	In Catalog
		Cabs/Roofs/Windshields:	
	BM23638	Air Cleaner Relocation Kit (Diesel) *Quiet Cab Kit for Deluxe Cab. Requires Noise Reduction Kit. Can also be used with Poly Cab for noise reduction.*	61.37
	BM23608	Cab Heater *Requires Cab Heater Fitting Kit.*	1,130.99
	VGB10548	Cab Heater Fitting Kit	23.54
	BM23498	Deluxe Cab Frame *Requires Seat Belt Kit, Glass Door Kit, Glass Windshield with Wiper, and Rear Window Kit to complete full Deluxe Cab.*	1,443.43
	VGB10505	Electrical Kit *Required for field installed Deluxe cabs.*	94.16

XUV 855D Power Steering Camo
Continued

CODE	ATTACHMENT IDENTIFIER	DESCRIPTION	SUGGESTED LIST PRICE USD ($)
		ATTACHMENTS FOR FIELD CONVERSION Continued...	
	BM24560	Glass Door Kit - Deluxe Cab	2,427.83
	BM23507	Glass Windshield with Wiper - Deluxe Cab	874.19
	BM21656	Interior Light Kit - Deluxe Cab *Requires Electrical Kit.*	58.86
	BM23750	Noise Reduction Kit (Gas & Diesel) *Quiet Cab Kit for Deluxe Cab. Requires Air Cleaner Relocation Kit.*	373.43
	BM23742	OPS Full No-Scratch Windshield *Not compatible with Deluxe Cab Frame. Compatible with poly cab.*	531.79
	BM23741	OPS Full Poly Windshield *Not compatible with Deluxe Cab Frame. Compatible with poly cab.*	423.71
	BM23743	OPS Glass Windshield with Wiper *Not compatible with Deluxe Cab Frame. Compatible with poly cab.*	874.19
	BM23740	OPS Half Poly Windshield *Not compatible with Deluxe Cab Frame.*	339.19
	BM24115	OPS Poly Roof - Black	445.11
	BM24320	OPS Poly Roof - Camo	802.50
	BM24561	OPS Rear Panel *Part of the Poly cab, or can be mounted on the OPS alone. Requires full windshield, poly cab doors, and poly roof to complete poly cab.*	502.90
	LP10314	OPS Side Mirror - Left *Available through Order Zone.*	In Catalog
	LP10315	OPS Side Mirror - Right *Available through Order Zone.*	In Catalog
	LP93127	OPS Soft Roof - Black *Available through Order Zone*	In Catalog
	LP93123	OPS Soft Roof - Camo *Available through Order Zone*	In Catalog
	BM24117	Poly Cab Doors *Includes left and right doors, with side mirrors. Requires full windshield, OPS rear panel, and poly roof to complete poly cab.*	2,675.00
	BM23505	Rear Window Kit - Deluxe Cab	225.77
	BM23755	Seat Belt Kit *Required with Deluxe Cab Frame*	144.46
	BM23508	Side Mirrors - Deluxe Cab	129.47
	BM21646	Visor (1) Kit - Deluxe cab	70.61
	BM23534	Windshield Washer Fluid Kit - Deluxe Cab *Requires Electrical Kit.*	173.34

XUV 855D Power Steering Camo
Continued

CODE	ATTACHMENT IDENTIFIER	DESCRIPTION	SUGGESTED LIST PRICE USD ($)
		ATTACHMENTS FOR FIELD CONVERSION Continued...	
		Cargo Box Options / Storage:	
	BM23849	5 Gallon Pail Holder	38.51
	BM22772	Cargo Box Bed Mat	119.84
	BM22769	Cargo Box Divider	191.53
	BM22811	Cargo Box FenderGuard *Requires Rear Bumper*	191.53
	BM23694	Cargo Box Power Lift Kit	858.14
	BM22774	Cargo Box Side Extension Kit	511.46
	LP19880	Deluxe Cargo Box Cover - Black *Available through Order Zone*	In Catalog
	BM22980	Front Hood Rack *Requires Front Brush Guard.*	241.81
	LP30320	Fuel Pack *Available through Order Zone*	In Catalog
	LP19878	Gator Gear Organizer - Black *Available through Order Zone*	In Catalog
	LP19886	Gator Tool Box *Contact Dealer for pricing.*	In Catalog
	LP93117	OPS Overhead Organizer - Black *Available through Order Zone*	In Catalog
	LP93113	OPS Overhead Organizer - Camo *Available through Order Zone*	In Catalog
	LP46485	Ratcheting Rhino Grip *Available through Order Zone.*	In Catalog
	LP25929	Rhino Grip XL - Double *Available through Order Zone.*	In Catalog
	LP25928	Rhino Grip XL - Single *Available through Order Zone.*	In Catalog
	LP19882	Saw Press Bracket *Available through Order Zone*	In Catalog
	BM22775	Side Tool Rack	304.96
	LP93207	Soft Rear Screen and Organizer - Black *Available through Order Zone*	In Catalog
		Carts / Hitches:	
	LPPCT10LXATV	10AT Cart *Available through Order Zone*	In Catalog
	LPPCT17ATJD	17AT Cart *Available through Order Zone.*	In Catalog

XUV 855D Power Steering Camo
Continued

CODE	ATTACHMENT IDENTIFIER	DESCRIPTION	SUGGESTED LIST PRICE USD ($)
		ATTACHMENTS FOR FIELD CONVERSION Continued...	
	LPUT21JD	21 Steel Utility Cart *Available through Order Zone*	In Catalog
	PM05101	Ball Mount - 1.875 in. (48mm)	See Parts
	PM05201	Ball Mount - 2 in. (51mm)	See Parts
	BM22290	Drawbar - 2 in. (51mm)	38.51
		Custom & High Performance:	
	BM24021	Fox ® High Performance Racing Shox	1,758.01
	BM22703	Seat-Belt Comfort Strap (2) *Also compatible with Deluxe Cab.*	77.04
	BM24453	Stereo Mounting Kit *Includes mounting kit only; must choose one of the following three head units to have complete stereo:* *Radio, Heavy Duty AM / FM / WB / AUX (SWJHD1120)* *Radio, Heavy Duty AM / FM / WB / SAT / I-POD (SWJHD1620)* *Radio, AM / FM / WB / CD / AUX / SAT Ready (SWJHD3620)* *Must order head unit through Parts. Stereo Mounting Kit not compatible with Deluxe Cab.*	521.09
		Engine:	
	AM882530	Adaptor Parts for Engine Coolant Heater	See Parts
	AR87167	Engine Coolant Heater (110 Volt) *Requires adapter parts for engine coolant heater. Requires AM134805 Engine Block Heater Adapter.*	See Parts
		Hunting / Camo:	
	LP19884	Cargo Box Gun Mount - Black *Available through Order Zone*	In Catalog
	LP19879	Deluxe Cargo Box Cover- Camo *Available through Order Zone*	In Catalog
	LP19877	Gator Gear Organizer (Camo) *Available through Order Zone*	In Catalog
	LP10319	Gun Mount Kit - Overhead *Includes 2 Gun Boot VI.* *Available through Order Zone*	In Catalog
	LP93103	Vehicle Cover, Cab / ROPS - Camo *Fits all Models Equipped with OPS and Deluxe Cab Structure.* *Available through Order Zone*	In Catalog
		Lights / Signals:	
	BM24726	Backup Alarm	74.56
	BM24013	Beacon Light *Requires OPS Poly Roof and OPS Switch Bank.*	219.36
	BM21649	Beacon Light Kit - Deluxe Cab *Requires Electrical Kit.*	371.29
	BM24591	Brake / Tail Light Kit	160.50

XUV 855D Power Steering Camo
Continued

CODE	ATTACHMENT IDENTIFIER	DESCRIPTION	SUGGESTED LIST PRICE USD ($)
		ATTACHMENTS FOR FIELD CONVERSION Continued...	
	BM24586	Deluxe Signal Light Kit *Includes Turn Signals (Front & Rear), 4-Way Flashers, Brake, Tail & Reverse Lights.*	374.50
	BM24587	Deluxe Signal Light Kit *Includes Turn Signals (Front & Rear) and 4-Way Flashers. Compatible with the 825i and 825i S4 vehicles equipped with the 3000 cargo box option code or 625i, 855D and 855D S4 vehicles equipped with the 3002 Cargo Box option code which already includes the brake & tail lights.*	171.20
	BM21651	Front Light Kit - Deluxe Cab *Requires Electrical Kit.*	293.19
	BM23442	Hella HID Sport Driving Lights *Requires OPS Switch Bank for OPS or poly roof mounting, or Front Brushguard for bumper mounting.*	935.19
	BM24108	Hella Performance Spot Lights *Requires OPS Switch Bank for OPS or poly roof mounting, or Front Brushguard for bumper mounting.*	343.47
	BM23370	Horn Kit	97.37
	BM24090	Long Range Light Kit *Can also mount behind front bumper cover directly to frame.* *Requires OPS Switch Bank for OPS or poly roof mounting, or Front Brushguard for brushguard mounting.*	191.53
	BM24016	Mid-Range Light Kit *Requires OPS Switch Bank for OPS or poly roof mounting. Can be installed on the front or rear of OPS or roof.*	123.06
	BM24089	OPS Switch Bank *Accommodates up to three separate OPS accessory kits.*	67.41
	BM21652	Rear Light Kit - Deluxe Cab *Requires Electrical Kit.*	217.21
		Protection:	
	BM23727	Deflector Plate	55.64
	BM24282	Floormat *Also front floormat on S4*	78.11
	BM24463	Front CV Guards	114.49
	BM22987	Heavy Duty Fender Guard *Compatible with Standard Front Bumper.*	215.07
	BM22841	Heavy Duty Front Brush Guard	249.31
	BM22767	Heavy Duty Rear Bumper	236.47
	BM22962	Rear CV Guards	114.49
	BM22773	Tail Light Protectors	89.89
	LP93107	Vehicle Cover, Cab / ROPS - Black *Available through Order Zone.*	In Catalog

XUV 855D Power Steering Camo
Continued

CODE	ATTACHMENT IDENTIFIER	DESCRIPTION	SUGGESTED LIST PRICE USD ($)
		ATTACHMENTS FOR FIELD CONVERSION Continued...	
		Seats / Wheels / Tires:	
	LP40897	Camoplast Tracks (855D) *Available through Order Zone*	In Catalog
		Sprayers / Pressure Washers:	
	LP33597	25 Gallon Bed Sprayer *Available through Order Zone*	In Catalog
	LP19490	25 Gallon Portable Sprayer *Available through Order Zone*	In Catalog
	LP20852	45 Gallon Bed Sprayer *Available through Order Zone*	In Catalog
	LP22908	45 Gallon High Performance Sprayer *Available through Order Zone*	In Catalog
	LP20485	45 Gallon Tow-Behind Sprayer *Available through Order Zone*	In Catalog
	LP20853	90 Gallon Bed Sprayer *Available through Order Zone*	In Catalog
	LP22909	90 Gallon High Performance Bed Sprayer *Available through Order Zone*	In Catalog
	LPGP2700GH	GatorPal High Pressure Washer (2700 psi, Honda engine) *Contact Dealer for pricing.*	In Catalog
	LPGP2700GS	GatorPal High Pressure Washer (2700 psi, Subaru engine) *Contact Dealer for pricing.*	In Catalog
	LPGP3000GH	GatorPal High Pressure Washer (3000 psi, Honda engine) *Contact Dealer for pricing.*	In Catalog
	LPGP3000GS	GatorPal High Pressure Washer (3000 psi, Subaru engine) *Contact Dealer for pricing.*	In Catalog
	LP22885	HP 150 in. Precision Boom *Compatible with all High Performance Sprayers* *Available through Order Zone*	In Catalog
	LP39963	HP 45 Gallon Sprayer - Tow Behind *Available through Order Zone*	In Catalog
	LP22884	HP Boomless Nozzles *Compatible with all High Performance Sprayers* *Available through Order Zone*	In Catalog
	LP22911	HP Standard Gator Boom *Compatible with all High Performance Sprayers* *Available through Order Zone*	In Catalog
		Winch:	
	BM24443	Warn® Winch (3000 lb) *Requires 2-Inch Receiver Multi-Mount Kit for Front or Rear Receiver Mount.*	770.40
	BM23105	Winch - 2 Inch Receiver Multi-Mount Kit	225.77

XUV 855D Power Steering Camo
Continued

CODE	ATTACHMENT IDENTIFIER	DESCRIPTION	SUGGESTED LIST PRICE USD ($)
		ATTACHMENTS FOR FIELD CONVERSION Continued...	
	BM21392	Winch Accessories Kit *Accessory kit includes 1/2" shackle, 9,000 lbs. maximum capacity snatch block, (2) 1"x8' tree trunk protectors, and (1) pair of WARN winching gloves.*	129.47
		SERVICE CONTRACTS - RESIDENTIAL OWNERS/USE	
		Visit http://www.JohnDeere.com/ServicePlans for more information on John Deere Service Contracts. May not be Available in Parts of the U.S., Not Available in Canada. Price may vary due to driving distance and/or time from machine to dealership location.	
		John Deere Extended Service Plan - 2-Year Option *Available for T-Series, HPX and XUV utility vehicles only.)* *2-year extended service plan. (1 year of extended service protection);* *2-years of warranty transportation.*	399.99
		John Deere Extended Service Plan - 3-Year Option *3-year extended service plan. (2 years of extended service protection);* *3-years of warranty transportation.*	569.99

XUV 855D S4 Green & Yellow Utility and Protection PR

Equipment for Base Machine

ENGINE:
22.8 Engine HP*(854cc),
Three Cylinder, Liquid-cooled,
Overhead Valves
4-Cycle Diesel
Full Pressure Lubrication
System
Replaceable Single Dry-Type
Element Air Cleaner with
Remote Intake
7.0 Gallon (26.49L) Fuel
Capacity
Solid-state Ignition (12V)
Spark-arresting Muffler
ELECTRICAL:
Electric Start
55 Amp 3-Phase Alternator
480 CCA Battery
Two 37.5 Watt Halogen
Headlights
TRANSAXLE/TRANSMISSION:
Continuously Variable
Transmission
Full Clutch Enclosure
Two-speed Transaxle
Operator Selectable 4WD
32 mph (51 kph) Maximum
Forward Speed
On-demand True Four-Wheel
Drive System
Auto Locking Front Differential
Traction Assist
Front and Rear Hydraulic Disk
Brakes
Hand-operated Sealed Wet Disk
Park brake
1.3 In. (27mm) Forged Rear
Axles
STEERING/SUSPENSION:
Power Steering
Rack and Pinion Steering
Independent Front Suspension
(IRS) with 8 inches (203mm)
of travel
Independent Rear Suspension
(IRS) with 9 inches (228.6mm)
of travel
Integrated 2" Rear Receiver
12.4 ft. Turning Radius
Ground Clearance: 11 In.
(267 mm)
Ground Clearance
(Under Foot Platform):
12.25 In (311 mm)
FRAME/STYLED PARTS:
Hydroform Technology Frame
PC/ASA (JDLOY) Hood and
Fenders
OCCUPANT PROTECTION SYSTEM(OPS):
1.75 In. (44.4 mm) Steel Tubular
Overhead Structure
Multiple Passenger Handholds
3-pt. Seat Belts
SAE J2194 & OSHA ROPS Certified
OPERATOR STATION:
Front and rear bench seats
7 In. (178 mm) Slide Rail
Hip Restraint Bars for Driver
and Passenger
Passenger Grab Handles
Glove Box
Storage Compartment Under Hood
Two Cup Holders
Instrument gauge with 4
wheel-drive indicator, RPM,
MPH/KPH, time of day, fuel
level, total miles and hour
meters
12v DC Outlet
FRONTAL PROTECTION:
Heavy-Duty Front Bumper
Integrated 2 Inch Front Receiver
Hitch
REAR PROTECTION:
Engine carrier close ut panel
DIMENSIONS(WITH OPS):
154 In. Long (3924.3mm) x 62 In.
Wide (1574.8mm) x 75 Inches High
(1905mm)
PAYLOAD CAPACITY:
1,400 Lb (635 kg) Total Payload
Capacity which Includes:
200 Lb (91 kg) Driver,
200 Lb (91 kg) Passenger, and
1000 Lb (454 kg) in Cargo Box
Towing Capacity:
1,500 Lb (680kg)
CARGO BOX:
45 In. Long x 52 In. Wide x
12 In. Deep
(1,143mm x 1321mm x 305mm)
16.4cu. ft (.46 cu.m) Capacity
1000 Lbs (454 kg) Box Capacity
Tilting Box
Hinged (Bottom) Tailgate
Load Guard
TIRES:
Front: 26x9-12 Ancla XT
(Extreme Terrain Tires)
Rear: 26x11-12 Ancla XT
(Extreme Terrain Tires)
SAFETY VIDEO TAPE:
Safety and Operational DVD
Operators Manual
*Engine HP is Provided by the
Engine Manufacturer to be Used
for Comparison Purposes Only,
Actual Operating HP will be
Less.
Safety and Operational DVD
Operators Manual
*Engine HP is Provided by the
Engine Manufacturer to be Used
for Comparison Purposes Only,
Actual Operating HP will be
Less.

CODE	ATTACHMENT IDENTIFIER	DESCRIPTION	SUGGESTED LIST PRICE USD ($)

Select One Code From Each Required Category

BASE MACHINE

F.O.B. Janesville, Wisconsin

589AM	XUV 855D S4 Green & Yellow Utility and Protection PR *Base Machine Suggested List Price Does Not Include $500 USD Destination Charge.*	14,999.00

DESTINATION

0202	US/Canada	In Base Price
0230	Australia/New Zealand	Same Price

XUV 855D S4 Green & Yellow Utility and Protection PR

Continued

CODE	ATTACHMENT IDENTIFIER	DESCRIPTION	SUGGESTED LIST PRICE USD ($)
		WHEELS WITH TIRES (FOUR)	
1002		Yellow Alloy Wheels Maxxis Bighorn Radial Tires	823.00
		DRIVER SEAT	
2001		Bench Seat - Yellow	Same Price
		DELUXE CARGO BOX	
3002		Deluxe Cargo Box with Polyurea Liner, Brake, Tail, Reverse Lights & Light Protector	496.00
		OVERHEAD PROTECTION STRUCTURES (OPS)	
4008		OPS with Black Poly Roof	559.00
		POWER AND FRONT PROTECTION PACKAGE	
5000		Power and Front Protection Package Package Consists of: Power Lift, Heavy Duty Front Brushguard, Heavy Duty Front Fender Guard, Front Floor Mats, Rear Floor Mats *Package Priced at 10% discount.*	1,331.00
		REAR PROTECTION PACKAGE	
5100		Rear Protection Package Package Consists of: Rear Bumper, Bed Mat, Cargo Box Heavy Duty Fender Guards *Package Priced at 10% discount.*	494.00
		FRONT BRUSH GUARD	
6010		Less Front Brush Guard *Must order 6010 option code when ordering 5000 option code.*	In Base Price
		HOOD RACK	
6310		Less Front Hood Rack XUV *Must order 6310 option code when ordering 4002 option code.*	In Base Price
		ATTACHMENTS FOR FIELD CONVERSION	
		Blades:	
	LP25355	Heavy Duty POWERtach Blade - 72" *Available through Order Zone*	In Catalog
	LPPK140	POWERtach Deflector Shield *Available through Order Zone*	In Catalog
	LPPK120	POWERtach Markers *Available through Order Zone*	In Catalog
	LPPWBK72	POWERtach Poly Wear Bar *Available through Order Zone*	In Catalog
	LPPK150	POWERtach Rubber Squeegee *Available through Order Zone*	In Catalog

XUV 855D S4 Green & Yellow Utility and Protection PR

Continued

CODE	ATTACHMENT IDENTIFIER	DESCRIPTION	SUGGESTED LIST PRICE USD ($)
		ATTACHMENTS FOR FIELD CONVERSION Continued...	
	LPPK160	POWERtach Skid Shoes *Available through Order Zone*	In Catalog
		Cabs/Roofs/Windshields:	
	BM23742	OPS Full No-Scratch Windshield *Not compatible with Deluxe Cab Frame. Compatible with poly cab.*	531.79
	BM23741	OPS Full Poly Windshield *Not compatible with Deluxe Cab Frame. Compatible with poly cab.*	423.71
	BM23743	OPS Glass Windshield with Wiper *Not compatible with Deluxe Cab Frame. Compatible with poly cab.*	874.19
	BM23740	OPS Half Poly Windshield *Not compatible with Deluxe Cab Frame.*	339.19
	BM24116	OPS Poly Roof - S4 (Black)	598.13
	BM24561	OPS Rear Panel *Part of the Poly cab, or can be mounted on the OPS alone. Requires full windshield, poly cab doors, and poly roof to complete poly cab.*	502.90
	LP10314	OPS Side Mirror - Left *Available through Order Zone.*	In Catalog
	LP10315	OPS Side Mirror - Right *Available through Order Zone.*	In Catalog
		Cargo Box Options / Storage:	
	BM23849	5 Gallon Pail Holder	38.51
	BM22772	Cargo Box Bed Mat	119.84
	BM22769	Cargo Box Divider	191.53
	BM22811	Cargo Box FenderGuard *Requires Rear Bumper*	191.53
	BM23694	Cargo Box Power Lift Kit	858.14
	BM22774	Cargo Box Side Extension Kit	511.46
	LP19880	Deluxe Cargo Box Cover - Black *Available through Order Zone*	In Catalog
	BM22980	Front Hood Rack *Requires Front Brush Guard.*	241.81
	LP30320	Fuel Pack *Available through Order Zone*	In Catalog
	LP19878	Gator Gear Organizer - Black *Available through Order Zone*	In Catalog
	LP19886	Gator Tool Box *Contact Dealer for pricing.*	In Catalog

XUV 855D S4 Green & Yellow Utility and Protection PR
Continued

CODE	ATTACHMENT IDENTIFIER	DESCRIPTION	SUGGESTED LIST PRICE USD ($)
		ATTACHMENTS FOR FIELD CONVERSION Continued...	
	LP93117	OPS Overhead Organizer - Black *Available through Order Zone*	In Catalog
	LP46485	Ratcheting Rhino Grip *Available through Order Zone.*	In Catalog
	LP25929	Rhino Grip XL - Double *Available through Order Zone.*	In Catalog
	LP25928	Rhino Grip XL - Single *Available through Order Zone.*	In Catalog
	LP19882	Saw Press Bracket *Available through Order Zone*	In Catalog
	BM22775	Side Tool Rack	304.96
	LP93207	Soft Rear Screen and Organizer - Black *Available through Order Zone*	In Catalog
		Carts / Hitches:	
	LPPCT10LXATV	10AT Cart *Available through Order Zone*	In Catalog
	LPPCT17ATJD	17AT Cart *Available through Order Zone.*	In Catalog
	LPUT21JD	21 Steel Utility Cart *Available through Order Zone*	In Catalog
	PM05101	Ball Mount - 1.875 in. (48mm)	See Parts
	PM05201	Ball Mount - 2 in. (51mm)	See Parts
	BM22290	Drawbar - 2 in. (51mm)	38.51
		Custom & High Performance:	
	BM22703	Seat-Belt Comfort Strap (2) *Also compatible with Deluxe Cab.*	77.04
	BM24455	Stereo Mounting Kit *Includes mounting kit only; must choose one of the following three head units to have complete stereo:* *Radio, Heavy Duty AM / FM / WB / AUX (SWJHD1120)* *Radio, Heavy Duty AM / FM / WB / SAT / I-POD (SWJHD1620)* *Radio, AM / FM / WB / CD / AUX / SAT Ready (SWJHD3620)* *Must order head unit through Parts. Stereo Mounting Kit not compatible with Deluxe Cab.*	660.19
		Engine:	
	AM882530	Adaptor Parts for Engine Coolant Heater	See Parts
	AR87167	Engine Coolant Heater (110 Volt) *Requires adapter parts for engine coolant heater. Requires AM134805 Engine Block Heater Adapter.*	See Parts
		Hunting / Camo:	
	LP19884	Cargo Box Gun Mount - Black *Available through Order Zone*	In Catalog

XUV 855D S4 Green & Yellow Utility and Protection PR
Continued

CODE	ATTACHMENT IDENTIFIER	DESCRIPTION	SUGGESTED LIST PRICE USD ($)
		ATTACHMENTS FOR FIELD CONVERSION Continued...	
	LP10319	Gun Mount Kit - Overhead *Includes 2 Gun Boot VI.* *Available through Order Zone*	In Catalog
		Lights / Signals:	
	BM24726	Backup Alarm	74.56
	BM24013	Beacon Light *Requires OPS Poly Roof and OPS Switch Bank.*	219.36
	BM24591	Brake / Tail Light Kit	160.50
	BM24586	Deluxe Signal Light Kit *Includes Turn Signals (Front & Rear), 4-Way Flashers, Brake, Tail & Reverse Lights.*	374.50
	BM24587	Deluxe Signal Light Kit *Includes Turn Signals (Front & Rear) and 4-Way Flashers. Compatible with the 825i and 825i S4 vehicles equipped with the 3000 cargo box option code or 625i, 855D and 855D S4 vehicles equipped with the 3002 Cargo Box option code which already includes the brake & tail lights.*	171.20
	BM23442	Hella HID Sport Driving Lights *Requires OPS Switch Bank for OPS or poly roof mounting, or Front Brushguard for bumper mounting.*	935.19
	BM24108	Hella Performance Spot Lights *Requires OPS Switch Bank for OPS or poly roof mounting, or Front Brushguard for bumper mounting.*	343.47
	BM23370	Horn Kit	97.37
	BM24090	Long Range Light Kit *Can also mount behind front bumper cover directly to frame.* *Requires OPS Switch Bank for OPS or poly roof mounting, or Front Brushguard for brushguard mounting.*	191.53
	BM24016	Mid-Range Light Kit *Requires OPS Switch Bank for OPS or poly roof mounting. Can be installed on the front or rear of OPS or roof.*	123.06
	BM24273	Mid-Range Light Kit (rear S4 Only) *Requires OPS Switch Bank. Compatible with OPS Poly Roofs, or on the OPS alone.*	123.06
	BM24089	OPS Switch Bank *Accommodates up to three separate OPS accessory kits.*	67.41
		Protection:	
	BM23727	Deflector Plate	55.64
	BM24282	Floormat *Also front floormat on S4*	78.11
	BM24283	Floormat (S4 rear)	78.11
	BM24463	Front CV Guards	114.49
	BM22987	Heavy Duty Fender Guard *Compatible with Standard Front Bumper.*	215.07

XUV 855D S4 Green & Yellow Utility and Protection PR
Continued

CODE	ATTACHMENT IDENTIFIER	DESCRIPTION	SUGGESTED LIST PRICE USD ($)
		ATTACHMENTS FOR FIELD CONVERSION Continued...	
	BM22841	Heavy Duty Front Brush Guard	249.31
	BM22767	Heavy Duty Rear Bumper	236.47
	BM22962	Rear CV Guards	114.49
	BM22773	Tail Light Protectors	89.89
		Seats / Wheels / Tires:	
	LP40897	Camoplast Tracks (855D) *Available through Order Zone*	In Catalog
		Sprayers / Pressure Washers:	
	LP33597	25 Gallon Bed Sprayer *Available through Order Zone*	In Catalog
	LP19490	25 Gallon Portable Sprayer *Available through Order Zone*	In Catalog
	LP20852	45 Gallon Bed Sprayer *Available through Order Zone*	In Catalog
	LP22908	45 Gallon High Performance Sprayer *Available through Order Zone*	In Catalog
	LP20485	45 Gallon Tow-Behind Sprayer *Available through Order Zone*	In Catalog
	LP20853	90 Gallon Bed Sprayer *Available through Order Zone*	In Catalog
	LP22909	90 Gallon High Performance Bed Sprayer *Available through Order Zone*	In Catalog
	LPGP2700GH	GatorPal High Pressure Washer (2700 psi, Honda engine) *Contact Dealer for pricing.*	In Catalog
	LPGP2700GS	GatorPal High Pressure Washer (2700 psi, Subaru engine) *Contact Dealer for pricing.*	In Catalog
	LPGP3000GH	GatorPal High Pressure Washer (3000 psi, Honda engine) *Contact Dealer for pricing.*	In Catalog
	LPGP3000GS	GatorPal High Pressure Washer (3000 psi, Subaru engine) *Contact Dealer for pricing.*	In Catalog
	LP22885	HP 150 in. Precision Boom *Compatible with all High Performance Sprayers* *Available through Order Zone*	In Catalog
	LP39963	HP 45 Gallon Sprayer - Tow Behind *Available through Order Zone*	In Catalog
	LP22884	HP Boomless Nozzles *Compatible with all High Performance Sprayers* *Available through Order Zone*	In Catalog

XUV 855D S4 Green & Yellow Utility and Protection PR

Continued

CODE	ATTACHMENT IDENTIFIER	DESCRIPTION	SUGGESTED LIST PRICE USD ($)
		ATTACHMENTS FOR FIELD CONVERSION Continued...	
	LP22911	HP Standard Gator Boom *Compatible with all High Performance Sprayers* *Available through Order Zone*	In Catalog
		Winch:	
	BM24443	Warn® Winch (3000 lb) *Requires RE266640 positive cable and AN305976 ground cable to reach contactor.* *Requires 2-Inch Receiver Multi-Mount Kit for Front or Rear Receiver Mount.*	770.40
	BM23105	Winch - 2 Inch Receiver Multi-Mount Kit	225.77
	BM21392	Winch Accessories Kit *Accessory kit includes 1/2" shackle, 9,000 lbs. maximum capacity snatch block, (2) 1"x8' tree trunk protectors, and (1) pair of WARN winching gloves.*	129.47
		SERVICE CONTRACTS - RESIDENTIAL OWNERS/USE	
		Visit http://www.JohnDeere.com/ServicePlans for more information on John Deere Service Contracts. May not be Available in Parts of the U.S., Not Available in Canada. Price may vary due to driving distance and/or time from machine to dealership location.	
		John Deere Extended Service Plan - 2-Year Option *Available for T-Series, HPX and XUV utility vehicles only.)* *2-year extended service plan. (1 year of extended service protection);* *2-years of warranty transportation.*	399.99
		John Deere Extended Service Plan - 3-Year Option *3-year extended service plan. (2 years of extended service protection);* *3-years of warranty transportation.*	569.99

XUV 855D S4 Green & Yellow

Equipment for Base Machine

ENGINE:
22.8 Engine HP*(854cc),
Three Cylinder, Liquid-cooled,
Overhead Valves
4-Cycle Diesel
Full Pressure Lubrication
System
Replaceable Single Dry-Type
Element Air Cleaner with
Remote Intake
7.0 Gallon (26.49L) Fuel
Capacity
Solid-state Ignition (12V)
Spark-arresting Muffler
ELECTRICAL:
Electric Start
55 Amp 3-Phase Alternator
480 CCA Battery
Two 37.5 Watt Halogen
Headlights
TRANSAXLE/TRANSMISSION:
Continuously Variable
Transmission
Full Clutch Enclosure
Two-speed Transaxle
Operator Selectable 4WD
32 mph (51 kph) Maximum
Forward Speed
On-demand True Four-Wheel
Drive System
Auto Locking Front Differential
Traction Assist
Front and Rear Hydraulic Disk
Brakes
Hand-operated Sealed Wet Disk
Park brake
1.3 In. (27mm) Forged Rear
Axles
STEERING/SUSPENSION:
Power Steering
Rack and Pinion Steering
Independent Front Suspension
(IRS) with 8 inches (203mm)
of travel
Independent Rear Suspension
(IRS) with 9 inches (228.6mm)
of travel
Integrated 2" Rear Receiver
12.4 ft. Turning Radius
Ground Clearance: 11 In.
(267 mm)
Ground Clearance
(Under Foot Platform):
12.25 In (311 mm)
FRAME/STYLED PARTS:
Hydroform Technology Frame
PC/ASA (JDLOY) Hood and
Fenders
OCCUPANT PROTECTION SYSTEM(OPS):
1.75 In. (44.4 mm) Steel Tubular
Overhead Structure
Multiple Passenger Handholds
3-pt. Seat Belts
SAE J2194 & OSHA ROPS Certified
OPERATOR STATION:
Front and rear bench seats
7 In. (178 mm) Slide Rail
Hip Restraint Bars for Driver
and Passenger
Passenger Grab Handles
Glove Box
Storage Compartment Under Hood
Two Cup Holders
Instrument gauge with 4
wheel-drive indicator, RPM,
MPH/KPH, time of day, fuel
level, total miles and hour
meters
12v DC Outlet
FRONTAL PROTECTION:
Heavy-Duty Front Bumper
Integrated 2 Inch Front Receiver
Hitch
REAR PROTECTION:
Engine carrier close ut panel
DIMENSIONS(WITH OPS):
154 In. Long (3924.3mm) x 62 In.
Wide (1574.8mm) x 75 Inches High
(1905mm)
PAYLOAD CAPACITY:
1,400 Lb (635 kg) Total Payload
Capacity which Includes:
200 Lb (91 kg) Driver,
200 Lb (91 kg) Passenger, and
1000 Lb (454 kg) in Cargo Box
Towing Capacity:
1,500 Lb (680kg)
CARGO BOX:
45 In. Long x 52 In. Wide x
12 In. Deep
(1,143mm x 1321mm x 305mm)
16.4cu. ft (.46 cu.m) Capacity
1000 Lbs (454 kg) Box Capacity
Tilting Box
Hinged (Bottom) Tailgate
Load Guard
TIRES:
Front: 26x9-12 Ancla XT
(Extreme Terrain Tires)
Rear: 26x11-12 Ancla XT
(Extreme Terrain Tires)
SAFETY VIDEO TAPE:
Safety and Operational DVD
Operators Manual
*Engine HP is Provided by the
Engine Manufacturer to be Used
for Comparison Purposes Only,
Actual Operating HP will be
Less.
Safety and Operational DVD
Operators Manual
*Engine HP is Provided by the
Engine Manufacturer to be Used
for Comparison Purposes Only,
Actual Operating HP will be
Less.

CODE	ATTACHMENT IDENTIFIER	DESCRIPTION	SUGGESTED LIST PRICE USD ($)

Select One Code From Each Required Category

BASE MACHINE

F.O.B. Janesville, Wisconsin

5890M	XUV 855D S4 Green & Yellow *Base Machine Suggested List Price Does Not Include $500 USD Destination Charge.*	14,999.00

DESTINATION

0202	US/Canada	In Base Price
0195	Mexico	Same Price

XUV 855D S4 Green & Yellow
Continued

CODE	ATTACHMENT IDENTIFIER	DESCRIPTION	SUGGESTED LIST PRICE USD ($)
		DESTINATION Continued...	
0250		All Other Countries	Same Price
0179		Europe	312.00
		WHEELS WITH TIRES (FOUR)	
1001		Yellow Steel Wheels Ancla M-T Extreme Terrain Tire	In Base Price
		DRIVER SEAT	
2001		Bench Seat - Yellow	Same Price
		DELUXE CARGO BOX	
3000		Deluxe Cargo Box - with Paint	In Base Price
		OVERHEAD PROTECTION STRUCTURES (OPS)	
4000		OPS	In Base Price
		POWER AND FRONT PROTECTION PACKAGE	
5010		Manual Lift *Must order 5010 option code when ordering 6000 option code.*	In Base Price
		REAR PROTECTION PACKAGE	
5110		Less Rear Protection Package	In Base Price
		FRONT BRUSH GUARD	
6010		Less Front Brush Guard *Must order 6010 option code when ordering 5000 option code.*	In Base Price
		HOOD RACK	
6310		Less Front Hood Rack XUV *Must order 6310 option code when ordering 4002 option code.*	In Base Price
		Attachments-Order as Desired	
		Spanish North American Kit:	
9435		Spanish North American Operator's Manual and Decal Kit	No Charge
		ATTACHMENTS FOR FIELD CONVERSION	
		Blades:	
	LP25355	Heavy Duty POWERtach Blade - 72" *Available through Order Zone*	In Catalog
	LPPK140	POWERtach Deflector Shield *Available through Order Zone*	In Catalog

XUV 855D S4 Green & Yellow
Continued

CODE	ATTACHMENT IDENTIFIER	DESCRIPTION	SUGGESTED LIST PRICE USD ($)
		ATTACHMENTS FOR FIELD CONVERSION Continued...	
	LPPK120	POWERtach Markers *Available through Order Zone*	In Catalog
	LPPWBK72	POWERtach Poly Wear Bar *Available through Order Zone*	In Catalog
	LPPK150	POWERtach Rubber Squeegee *Available through Order Zone*	In Catalog
	LPPK160	POWERtach Skid Shoes *Available through Order Zone*	In Catalog
		Cabs/Roofs/Windshields:	
	BM23742	OPS Full No-Scratch Windshield *Not compatible with Deluxe Cab Frame. Compatible with poly cab.*	531.79
	BM23741	OPS Full Poly Windshield *Not compatible with Deluxe Cab Frame. Compatible with poly cab.*	423.71
	BM23743	OPS Glass Windshield with Wiper *Not compatible with Deluxe Cab Frame. Compatible with poly cab.*	874.19
	BM23740	OPS Half Poly Windshield *Not compatible with Deluxe Cab Frame.*	339.19
	BM24116	OPS Poly Roof - S4 (Black)	598.13
	BM24561	OPS Rear Panel *Part of the Poly cab, or can be mounted on the OPS alone. Requires full windshield, poly cab doors, and poly roof to complete poly cab.*	502.90
	LP10314	OPS Side Mirror - Left *Available through Order Zone.*	In Catalog
	LP10315	OPS Side Mirror - Right *Available through Order Zone.*	In Catalog
		Cargo Box Options / Storage:	
	BM23849	5 Gallon Pail Holder	38.51
	BM22772	Cargo Box Bed Mat	119.84
	BM22769	Cargo Box Divider	191.53
	BM22811	Cargo Box FenderGuard *Requires Rear Bumper*	191.53
	BM23694	Cargo Box Power Lift Kit	858.14
	BM22774	Cargo Box Side Extension Kit	511.46
	LP19880	Deluxe Cargo Box Cover - Black *Available through Order Zone*	In Catalog
	BM22980	Front Hood Rack *Requires Front Brush Guard.*	241.81

XUV 855D S4 Green & Yellow
Continued

CODE	ATTACHMENT IDENTIFIER	DESCRIPTION	SUGGESTED LIST PRICE USD ($)
		ATTACHMENTS FOR FIELD CONVERSION Continued...	
	LP30320	Fuel Pack *Available through Order Zone*	In Catalog
	LP19878	Gator Gear Organizer - Black *Available through Order Zone*	In Catalog
	LP19886	Gator Tool Box *Contact Dealer for pricing.*	In Catalog
	LP93117	OPS Overhead Organizer - Black *Available through Order Zone*	In Catalog
	LP46485	Ratcheting Rhino Grip *Available through Order Zone.*	In Catalog
	LP25929	Rhino Grip XL - Double *Available through Order Zone.*	In Catalog
	LP25928	Rhino Grip XL - Single *Available through Order Zone.*	In Catalog
	LP19882	Saw Press Bracket *Available through Order Zone*	In Catalog
	BM22775	Side Tool Rack	304.96
	LP93207	Soft Rear Screen and Organizer - Black *Available through Order Zone*	In Catalog
		Carts / Hitches:	
	LPPCT10LXATV	10AT Cart *Available through Order Zone*	In Catalog
	LPPCT17ATJD	17AT Cart *Available through Order Zone.*	In Catalog
	LPUT21JD	21 Steel Utility Cart *Available through Order Zone*	In Catalog
	PM05101	Ball Mount - 1.875 in. (48mm)	See Parts
	PM05201	Ball Mount - 2 in. (51mm)	See Parts
	BM22290	Drawbar - 2 in. (51mm)	38.51
		Custom & High Performance:	
	BM22703	Seat-Belt Comfort Strap (2) *Also compatible with Deluxe Cab.*	77.04
	BM24455	Stereo Mounting Kit *Includes mounting kit only; must choose one of the following three head units to have complete stereo:* *Radio, Heavy Duty AM / FM / WB / AUX (SWJHD1120)* *Radio, Heavy Duty AM / FM / WB / SAT / I-POD (SWJHD1620)* *Radio, AM / FM / WB / CD / AUX / SAT Ready (SWJHD3620)* *Must order head unit through Parts. Stereo Mounting Kit not compatible with Deluxe Cab.*	660.19

XUV 855D S4 Green & Yellow

Continued

CODE	ATTACHMENT IDENTIFIER	DESCRIPTION	SUGGESTED LIST PRICE USD ($)
		ATTACHMENTS FOR FIELD CONVERSION Continued...	
		Engine:	
	AM882530	Adaptor Parts for Engine Coolant Heater	See Parts
	AR87167	Engine Coolant Heater (110 Volt) *Requires adapter parts for engine coolant heater. Requires AM134805 Engine Block Heater Adapter.*	See Parts
		Hunting / Camo:	
	LP19884	Cargo Box Gun Mount - Black *Available through Order Zone*	In Catalog
	LP10319	Gun Mount Kit - Overhead *Includes 2 Gun Boot VI.* *Available through Order Zone*	In Catalog
		Lights / Signals:	
	BM24726	Backup Alarm	74.56
	BM24013	Beacon Light *Requires OPS Poly Roof and OPS Switch Bank.*	219.36
	BM24591	Brake / Tail Light Kit	160.50
	BM24586	Deluxe Signal Light Kit *Includes Turn Signals (Front & Rear), 4-Way Flashers, Brake, Tail & Reverse Lights.*	374.50
	BM24587	Deluxe Signal Light Kit *Includes Turn Signals (Front & Rear) and 4-Way Flashers. Compatible with the 825i and 825i S4 vehicles equipped with the 3000 cargo box option code or 625i, 855D and 855D S4 vehicles equipped with the 3002 Cargo Box option code which already includes the brake & tail lights.*	171.20
	BM23442	Hella HID Sport Driving Lights *Requires OPS Switch Bank for OPS or poly roof mounting, or Front Brushguard for bumper mounting.*	935.19
	BM24108	Hella Performance Spot Lights *Requires OPS Switch Bank for OPS or poly roof mounting, or Front Brushguard for bumper mounting.*	343.47
	BM23370	Horn Kit	97.37
	BM24090	Long Range Light Kit *Can also mount behind front bumper cover directly to frame.* *Requires OPS Switch Bank for OPS or poly roof mounting, or Front Brushguard for brushguard mounting.*	191.53
	BM24016	Mid-Range Light Kit *Requires OPS Switch Bank for OPS or poly roof mounting. Can be installed on the front or rear of OPS or roof.*	123.06
	BM24273	Mid-Range Light Kit (rear S4 Only) *Requires OPS Switch Bank. Compatible with OPS Poly Roofs, or on the OPS alone.*	123.06
	BM24089	OPS Switch Bank *Accommodates up to three separate OPS accessory kits.*	67.41
		Protection:	
	BM23727	Deflector Plate	55.64

XUV 855D S4 Green & Yellow
Continued

CODE	ATTACHMENT IDENTIFIER	DESCRIPTION	SUGGESTED LIST PRICE USD ($)
		ATTACHMENTS FOR FIELD CONVERSION Continued...	
	BM24282	Floormat *Also front floormat on S4*	78.11
	BM24283	Floormat (S4 rear)	78.11
	BM24463	Front CV Guards	114.49
	BM22987	Heavy Duty Fender Guard *Compatible with Standard Front Bumper.*	215.07
	BM22841	Heavy Duty Front Brush Guard	249.31
	BM22767	Heavy Duty Rear Bumper	236.47
	BM22962	Rear CV Guards	114.49
	BM22773	Tail Light Protectors	89.89
		Seats / Wheels / Tires:	
	LP40897	Camoplast Tracks (855D) *Available through Order Zone*	In Catalog
		Sprayers / Pressure Washers:	
	LP33597	25 Gallon Bed Sprayer *Available through Order Zone*	In Catalog
	LP19490	25 Gallon Portable Sprayer *Available through Order Zone*	In Catalog
	LP20852	45 Gallon Bed Sprayer *Available through Order Zone*	In Catalog
	LP22908	45 Gallon High Performance Sprayer *Available through Order Zone*	In Catalog
	LP20485	45 Gallon Tow-Behind Sprayer *Available through Order Zone*	In Catalog
	LP20853	90 Gallon Bed Sprayer *Available through Order Zone*	In Catalog
	LP22909	90 Gallon High Performance Bed Sprayer *Available through Order Zone*	In Catalog
	LPGP2700GH	GatorPal High Pressure Washer (2700 psi, Honda engine) *Contact Dealer for pricing.*	In Catalog
	LPGP2700GS	GatorPal High Pressure Washer (2700 psi, Subaru engine) *Contact Dealer for pricing.*	In Catalog
	LPGP3000GH	GatorPal High Pressure Washer (3000 psi, Honda engine) *Contact Dealer for pricing.*	In Catalog
	LPGP3000GS	GatorPal High Pressure Washer (3000 psi, Subaru engine) *Contact Dealer for pricing.*	In Catalog

XUV 855D S4 Green & Yellow

Continued

CODE	ATTACHMENT IDENTIFIER	DESCRIPTION	SUGGESTED LIST PRICE USD ($)
		ATTACHMENTS FOR FIELD CONVERSION Continued...	
	LP22885	HP 150 in. Precision Boom *Compatible with all High Performance Sprayers* *Available through Order Zone*	In Catalog
	LP39963	HP 45 Gallon Sprayer - Tow Behind *Available through Order Zone*	In Catalog
	LP22884	HP Boomless Nozzles *Compatible with all High Performance Sprayers* *Available through Order Zone*	In Catalog
	LP22911	HP Standard Gator Boom *Compatible with all High Performance Sprayers* *Available through Order Zone*	In Catalog
		Winch:	
	BM24443	Warn® Winch (3000 lb) *Requires RE266640 positive cable and AN305976 ground cable to reach contactor.* *Requires 2-Inch Receiver Multi-Mount Kit for Front or Rear Receiver Mount.*	770.40
	BM23105	Winch - 2 Inch Receiver Multi-Mount Kit	225.77
	BM21392	Winch Accessories Kit *Accessory kit includes 1/2" shackle, 9,000 lbs. maximum capacity snatch block, (2) 1"x8' tree trunk protectors, and (1) pair of WARN winching gloves.*	129.47
		SERVICE CONTRACTS - RESIDENTIAL OWNERS/USE	
		Visit http://www.JohnDeere.com/ServicePlans for more information on John Deere Service Contracts. May not be Available in Parts of the U.S., Not Available in Canada. Price may vary due to driving distance and/or time from machine to dealership location.	
		John Deere Extended Service Plan - 2-Year Option *Available for T-Series, HPX and XUV utility vehicles only.)* *2-year extended service plan. (1 year of extended service protection);* *2-years of warranty transportation.*	399.99
		John Deere Extended Service Plan - 3-Year Option *3-year extended service plan. (2 years of extended service protection);* *3-years of warranty transportation.*	569.99

XUV 855D S4 Camo Utility and Protection PR

Equipment for Base Machine

ENGINE:
22.8 Engine HP*(854cc),
Three Cylinder, Liquid-cooled,
Overhead Valves
4-Cycle Diesel
Full Pressure Lubrication
System
Replaceable Single Dry-Type
Element Air Cleaner with
Remote Intake
7.0 Gallon (26.49L) Fuel
Capacity
Solid-state Ignition (12V)
Spark-arresting Muffler
ELECTRICAL:
Electric Start
55 Amp 3-Phase Alternator
480 CCA Battery
Two 37.5 Watt Halogen
Headlights
TRANSAXLE/TRANSMISSION:
Continuously Variable
Transmission
Full Clutch Enclosure
Two-speed Transaxle
Operator Selectable 4WD
32 mph (51 kph) Maximum
Forward Speed
On-demand True Four-Wheel
Drive System
Auto Locking Front Differential
Traction Assist
Front and Rear Hydraulic Disk
Brakes
Hand-operated Sealed Wet Disk
Park brake
1.3 In. (27mm) Forged Rear
Axles
STEERING/SUSPENSION:
Power Steering
Rack and Pinion Steering
Independent Front Suspension
(IRS) with 8 inches (203mm)
of travel
Independent Rear Suspension
(IRS) with 9 inches (228.6mm)
of travel
Integrated 2" Rear Receiver
12.4 ft. Turning Radius
Ground Clearance: 11 In.
(267 mm)
Ground Clearance
(Under Foot Platform):
12.25 In (311 mm)
FRAME/STYLED PARTS:
Hydroform Technology Frame
PC/ASA (JDLOY) Hood and
Fenders
OCCUPANT PROTECTION SYSTEM(OPS):
1.75 In. (44.4 mm) Steel Tubular
Overhead Structure
Multiple Passenger Handholds
3-pt. Seat Belts
SAE J2194 & OSHA ROPS Certified
OPERATOR STATION:
Front and rear bench seats
7 In. (178 mm) Slide Rail
Hip Restraint Bars for Driver
and Passenger
Passenger Grab Handles
Glove Box
Storage Compartment Under Hood
Two Cup Holders
Instrument gauge with 4
wheel-drive indicator, RPM,
MPH/KPH, time of day, fuel
level, total miles and hour
meters
12v DC Outlet
FRONTAL PROTECTION:
Heavy-Duty Front Bumper
Integrated 2 Inch Front Receiver
Hitch
REAR PROTECTION:
Engine carrier close ut panel
DIMENSIONS(WITH OPS):
154 In. Long (3924.3mm) x 62 In.
Wide (1574.8mm) x 75 Inches High
(1905mm)
PAYLOAD CAPACITY:
1,400 Lb (635 kg) Total Payload
Capacity which Includes:
200 Lb (91 kg) Driver,
200 Lb (91 kg) Passenger, and
1000 Lb (454 kg) in Cargo Box
Towing Capacity:
1,500 Lb (680kg)
CARGO BOX:
45 In. Long x 52 In. Wide x
12 In. Deep
(1,143mm x 1321mm x 305mm)
16.4cu. ft (.46 cu.m) Capacity
1000 Lbs (454 kg) Box Capacity
Tilting Box
Hinged (Bottom) Tailgate
Load Guard
TIRES:
Front: 26x9-12 Ancla XT
(Extreme Terrain Tires)
Rear: 26x11-12 Ancla XT
(Extreme Terrain Tires)
SAFETY VIDEO TAPE:
Safety and Operational DVD
Operators Manual
*Engine HP is Provided by the
Engine Manufacturer to be Used
for Comparison Purposes Only,
Actual Operating HP will be
Less.
Safety and Operational DVD
Operators Manual
*Engine HP is Provided by the
Engine Manufacturer to be Used
for Comparison Purposes Only,
Actual Operating HP will be
Less.

CODE	ATTACHMENT IDENTIFIER	DESCRIPTION	SUGGESTED LIST PRICE USD ($)

Select One Code From Each Required Category

BASE MACHINE

F.O.B. Janesville, Wisconsin

589BM	XUV 855D S4 Camo Utility and Protection PR *Base Machine Suggested List Price Does Not Include $500 USD Destination Charge.*	15,549.00

DESTINATION

0202	US/Canada	In Base Price
0230	Australia/New Zealand	Same Price

XUV 855D S4 Camo Utility and Protection PR

Continued

CODE	ATTACHMENT IDENTIFIER	DESCRIPTION	SUGGESTED LIST PRICE USD ($)
		WHEELS WITH TIRES (FOUR)	
1002		Black Alloy Wheels Maxxis Bighorn Radial Tires	823.00
		DRIVER SEAT	
2001		Bench Seat - Black	Same Price
		DELUXE CARGO BOX	
3002		Deluxe Cargo Box with Polyurea Liner, Brake, Tail, Reverse Lights & Light Protector	496.00
		OVERHEAD PROTECTION STRUCTURES (OPS)	
4008		OPS with Black Poly Roof	559.00
		POWER AND FRONT PROTECTION PACKAGE	
5000		Power and Front Protection Package Package Consists of: Power Lift, Heavy Duty Front Brushguard, Heavy Duty Front Fender Guard, Front Floor Mats, Rear Floor Mats *Package Priced at 10% discount.*	1,331.00
		REAR PROTECTION PACKAGE	
5100		Rear Protection Package Package Consists of: Rear Bumper, Bed Mat, Cargo Box Heavy Duty Fender Guards *Package Priced at 10% discount.*	494.00
		FRONT BRUSH GUARD	
6010		Less Front Brush Guard *Must order 6010 option code when ordering 5000 option code.*	In Base Price
		HOOD RACK	
6310		Less Front Hood Rack XUV *Must order 6310 option code when ordering 4002 option code.*	In Base Price
		ATTACHMENTS FOR FIELD CONVERSION	
		Blades:	
	LP25355	Heavy Duty POWERtach Blade - 72" *Available through Order Zone*	In Catalog
	LPPK140	POWERtach Deflector Shield *Available through Order Zone*	In Catalog
	LPPK120	POWERtach Markers *Available through Order Zone*	In Catalog
	LPPWBK72	POWERtach Poly Wear Bar *Available through Order Zone*	In Catalog
	LPPK150	POWERtach Rubber Squeegee *Available through Order Zone*	In Catalog

XUV 855D S4 Camo Utility and Protection PR
Continued

CODE	ATTACHMENT IDENTIFIER	DESCRIPTION	SUGGESTED LIST PRICE USD ($)
		ATTACHMENTS FOR FIELD CONVERSION Continued...	
	LPPK160	POWERtach Skid Shoes *Available through Order Zone*	In Catalog
		Cabs/Roofs/Windshields:	
	BM23742	OPS Full No-Scratch Windshield *Not compatible with Deluxe Cab Frame. Compatible with poly cab.*	531.79
	BM23741	OPS Full Poly Windshield *Not compatible with Deluxe Cab Frame. Compatible with poly cab.*	423.71
	BM23743	OPS Glass Windshield with Wiper *Not compatible with Deluxe Cab Frame. Compatible with poly cab.*	874.19
	BM23740	OPS Half Poly Windshield *Not compatible with Deluxe Cab Frame.*	339.19
	BM24116	OPS Poly Roof - S4 (Black)	598.13
	BM24561	OPS Rear Panel *Part of the Poly cab, or can be mounted on the OPS alone. Requires full windshield, poly cab doors, and poly roof to complete poly cab.*	502.90
	LP10314	OPS Side Mirror - Left *Available through Order Zone.*	In Catalog
	LP10315	OPS Side Mirror - Right *Available through Order Zone.*	In Catalog
		Cargo Box Options / Storage:	
	BM23849	5 Gallon Pail Holder	38.51
	BM22772	Cargo Box Bed Mat	119.84
	BM22769	Cargo Box Divider	191.53
	BM22811	Cargo Box FenderGuard *Requires Rear Bumper*	191.53
	BM23694	Cargo Box Power Lift Kit	858.14
	BM22774	Cargo Box Side Extension Kit	511.46
	LP19880	Deluxe Cargo Box Cover - Black *Available through Order Zone*	In Catalog
	BM22980	Front Hood Rack *Requires Front Brush Guard.*	241.81
	LP30320	Fuel Pack *Available through Order Zone*	In Catalog
	LP19878	Gator Gear Organizer - Black *Available through Order Zone*	In Catalog
	LP19886	Gator Tool Box *Contact Dealer for pricing.*	In Catalog

XUV 855D S4 Camo Utility and Protection PR
Continued

CODE	ATTACHMENT IDENTIFIER	DESCRIPTION	SUGGESTED LIST PRICE USD ($)
		ATTACHMENTS FOR FIELD CONVERSION Continued...	
	LP93117	OPS Overhead Organizer - Black *Available through Order Zone*	In Catalog
	LP93113	OPS Overhead Organizer - Camo *Available through Order Zone*	In Catalog
	LP46485	Ratcheting Rhino Grip *Available through Order Zone.*	In Catalog
	LP25929	Rhino Grip XL - Double *Available through Order Zone.*	In Catalog
	LP25928	Rhino Grip XL - Single *Available through Order Zone.*	In Catalog
	LP19882	Saw Press Bracket *Available through Order Zone*	In Catalog
	BM22775	Side Tool Rack	304.96
	LP93207	Soft Rear Screen and Organizer - Black *Available through Order Zone*	In Catalog
		Carts / Hitches:	
	LPPCT10LXATV	10AT Cart *Available through Order Zone*	In Catalog
	LPPCT17ATJD	17AT Cart *Available through Order Zone.*	In Catalog
	LPUT21JD	21 Steel Utility Cart *Available through Order Zone*	In Catalog
	PM05101	Ball Mount - 1.875 in. (48mm)	See Parts
	PM05201	Ball Mount - 2 in. (51mm)	See Parts
	BM22290	Drawbar - 2 in. (51mm)	38.51
		Custom & High Performance:	
	BM22703	Seat-Belt Comfort Strap (2) *Also compatible with Deluxe Cab.*	77.04
	BM24455	Stereo Mounting Kit *Includes mounting kit only; must choose one of the following three head units to have complete stereo:* *Radio, Heavy Duty AM / FM / WB / AUX (SWJHD1120)* *Radio, Heavy Duty AM / FM / WB / SAT / I-POD (SWJHD1620)* *Radio, AM / FM / WB / CD / AUX / SAT Ready (SWJHD3620)* *Must order head unit through Parts. Stereo Mounting Kit not compatible with Deluxe Cab.*	660.19
		Engine:	
	AM882530	Adaptor Parts for Engine Coolant Heater	See Parts
	AR87167	Engine Coolant Heater (110 Volt) *Requires adapter parts for engine coolant heater. Requires AM134805 Engine Block Heater Adapter.*	See Parts
		Hunting / Camo:	

XUV 855D S4 Camo Utility and Protection PR

Continued

CODE	ATTACHMENT IDENTIFIER	DESCRIPTION	SUGGESTED LIST PRICE USD ($)
		ATTACHMENTS FOR FIELD CONVERSION Continued...	
	LP19884	Cargo Box Gun Mount - Black *Available through Order Zone*	In Catalog
	LP19879	Deluxe Cargo Box Cover- Camo *Available through Order Zone*	In Catalog
	LP19877	Gator Gear Organizer (Camo) *Available through Order Zone*	In Catalog
	LP10319	Gun Mount Kit - Overhead *Includes 2 Gun Boot VI.* *Available through Order Zone*	In Catalog
		Lights / Signals:	
	BM24726	Backup Alarm	74.56
	BM24013	Beacon Light *Requires OPS Poly Roof and OPS Switch Bank.*	219.36
	BM24591	Brake / Tail Light Kit	160.50
	BM24586	Deluxe Signal Light Kit *Includes Turn Signals (Front & Rear), 4-Way Flashers, Brake, Tail & Reverse Lights.*	374.50
	BM24587	Deluxe Signal Light Kit *Includes Turn Signals (Front & Rear) and 4-Way Flashers. Compatible with the 825i and 825i S4 vehicles equipped with the 3000 cargo box option code or 625i, 855D and 855D S4 vehicles equipped with the 3002 Cargo Box option code which already includes the brake & tail lights.*	171.20
	BM23442	Hella HID Sport Driving Lights *Requires OPS Switch Bank for OPS or poly roof mounting, or Front Brushguard for bumper mounting.*	935.19
	BM24108	Hella Performance Spot Lights *Requires OPS Switch Bank for OPS or poly roof mounting, or Front Brushguard for bumper mounting.*	343.47
	BM23370	Horn Kit	97.37
	BM24090	Long Range Light Kit *Can also mount behind front bumper cover directly to frame.* *Requires OPS Switch Bank for OPS or poly roof mounting, or Front Brushguard for brushguard mounting.*	191.53
	BM24016	Mid-Range Light Kit *Requires OPS Switch Bank for OPS or poly roof mounting. Can be installed on the front or rear of OPS or roof.*	123.06
	BM24273	Mid-Range Light Kit (rear S4 Only) *Requires OPS Switch Bank. Compatible with OPS Poly Roofs, or on the OPS alone.*	123.06
	BM24089	OPS Switch Bank *Accommodates up to three separate OPS accessory kits.*	67.41
		Protection:	
	BM23727	Deflector Plate	55.64

XUV 855D S4 Camo Utility and Protection PR
Continued

CODE	ATTACHMENT IDENTIFIER	DESCRIPTION	SUGGESTED LIST PRICE USD ($)
		ATTACHMENTS FOR FIELD CONVERSION Continued...	
	BM24282	Floormat *Also front floormat on S4*	78.11
	BM24283	Floormat (S4 rear)	78.11
	BM24463	Front CV Guards	114.49
	BM22987	Heavy Duty Fender Guard *Compatible with Standard Front Bumper.*	215.07
	BM22841	Heavy Duty Front Brush Guard	249.31
	BM22767	Heavy Duty Rear Bumper	236.47
	BM22962	Rear CV Guards	114.49
	BM22773	Tail Light Protectors	89.89
		Seats / Wheels / Tires:	
	LP40897	Camoplast Tracks (855D) *Available through Order Zone*	In Catalog
		Sprayers / Pressure Washers:	
	LP33597	25 Gallon Bed Sprayer *Available through Order Zone*	In Catalog
	LP19490	25 Gallon Portable Sprayer *Available through Order Zone*	In Catalog
	LP20852	45 Gallon Bed Sprayer *Available through Order Zone*	In Catalog
	LP22908	45 Gallon High Performance Sprayer *Available through Order Zone*	In Catalog
	LP20485	45 Gallon Tow-Behind Sprayer *Available through Order Zone*	In Catalog
	LP20853	90 Gallon Bed Sprayer *Available through Order Zone*	In Catalog
	LP22909	90 Gallon High Performance Bed Sprayer *Available through Order Zone*	In Catalog
	LPGP2700GH	GatorPal High Pressure Washer (2700 psi, Honda engine) *Contact Dealer for pricing.*	In Catalog
	LPGP2700GS	GatorPal High Pressure Washer (2700 psi, Subaru engine) *Contact Dealer for pricing.*	In Catalog
	LPGP3000GH	GatorPal High Pressure Washer (3000 psi, Honda engine) *Contact Dealer for pricing.*	In Catalog
	LPGP3000GS	GatorPal High Pressure Washer (3000 psi, Subaru engine) *Contact Dealer for pricing.*	In Catalog

XUV 855D S4 Camo Utility and Protection PR

Continued

CODE	ATTACHMENT IDENTIFIER	DESCRIPTION	SUGGESTED LIST PRICE USD ($)
		ATTACHMENTS FOR FIELD CONVERSION Continued...	
	LP22885	HP 150 in. Precision Boom *Compatible with all High Performance Sprayers* *Available through Order Zone*	In Catalog
	LP39963	HP 45 Gallon Sprayer - Tow Behind *Available through Order Zone*	In Catalog
	LP22884	HP Boomless Nozzles *Compatible with all High Performance Sprayers* *Available through Order Zone*	In Catalog
	LP22911	HP Standard Gator Boom *Compatible with all High Performance Sprayers* *Available through Order Zone*	In Catalog
		Winch:	
	BM24443	Warn® Winch (3000 lb) *Requires RE266640 positive cable and AN305976 ground cable to reach contactor.* *Requires 2-Inch Receiver Multi-Mount Kit for Front or Rear Receiver Mount.*	770.40
	BM23105	Winch - 2 Inch Receiver Multi-Mount Kit	225.77
	BM21392	Winch Accessories Kit *Accessory kit includes 1/2" shackle, 9,000 lbs. maximum capacity snatch block, (2) 1"x8' tree trunk protectors, and (1) pair of WARN winching gloves.*	129.47
		SERVICE CONTRACTS - RESIDENTIAL OWNERS/USE	
		Visit http://www.JohnDeere.com/ServicePlans for more information on John Deere Service Contracts. May not be Available in Parts of the U.S., Not Available in Canada. Price may vary due to driving distance and/or time from machine to dealership location.	
		John Deere Extended Service Plan - 2-Year Option *Available for T-Series, HPX and XUV utility vehicles only.)* *2-year extended service plan. (1 year of extended service protection);* *2-years of warranty transportation.*	399.99
		John Deere Extended Service Plan - 3-Year Option *3-year extended service plan. (2 years of extended service protection);* *3-years of warranty transportation.*	569.99

XUV 855D S4 Camo

Equipment for Base Machine

ENGINE:
22.8 Engine HP*(854cc),
Three Cylinder, Liquid-cooled,
Overhead Valves
4-Cycle Diesel
Full Pressure Lubrication
System
Replaceable Single Dry-Type
Element Air Cleaner with
Remote Intake
7.0 Gallon (26.49L) Fuel
Capacity
Solid-state Ignition (12V)
Spark-arresting Muffler
ELECTRICAL:
Electric Start
55 Amp 3-Phase Alternator
480 CCA Battery
Two 37.5 Watt Halogen
Headlights
TRANSAXLE/TRANSMISSION:
Continuously Variable
Transmission
Full Clutch Enclosure
Two-speed Transaxle
Operator Selectable 4WD
32 mph (51 kph) Maximum
Forward Speed
On-demand True Four-Wheel
Drive System
Auto Locking Front Differential
Traction Assist
Front and Rear Hydraulic Disk
Brakes
Hand-operated Sealed Wet Disk
Park brake
1.3 In. (27mm) Forged Rear
Axles
STEERING/SUSPENSION:
Power Steering
Rack and Pinion Steering
Independent Front Suspension
(IRS) with 8 inches (203mm)
of travel
Independent Rear Suspension
(IRS) with 9 inches (228.6mm)
of travel
Integrated 2" Rear Receiver
12.4 ft. Turning Radius
Ground Clearance: 11 In.
(267 mm)
Ground Clearance
(Under Foot Platform):
12.25 In (311 mm)
FRAME/STYLED PARTS:
Hydroform Technology Frame
PC/ASA (JDLOY) Hood and
Fenders
OCCUPANT PROTECTION SYSTEM(OPS):
1.75 In. (44.4 mm) Steel Tubular
Overhead Structure
Multiple Passenger Handholds
3-pt. Seat Belts
SAE J2194 & OSHA ROPS Certified
OPERATOR STATION:
Front and rear bench seats
7 In. (178 mm) Slide Rail
Hip Restraint Bars for Driver
and Passenger
Passenger Grab Handles
Glove Box
Storage Compartment Under Hood
Two Cup Holders
Instrument gauge with 4
wheel-drive indicator, RPM,
MPH/KPH, time of day, fuel
level, total miles and hour
meters
12v DC Outlet
FRONTAL PROTECTION:
Heavy-Duty Front Bumper
Integrated 2 Inch Front Receiver
Hitch
REAR PROTECTION:
Engine carrier close ut panel
DIMENSIONS(WITH OPS):
154 In. Long (3924.3mm) x 62 In.
Wide (1574.8mm) x 75 Inches High
(1905mm)
PAYLOAD CAPACITY:
1,400 Lb (635 kg) Total Payload
Capacity which Includes:
200 Lb (91 kg) Driver,
200 Lb (91 kg) Passenger, and
1000 Lb (454 kg) in Cargo Box
Towing Capacity:
1,500 Lb (680kg)
CARGO BOX:
45 In. Long x 52 In. Wide x
12 In. Deep
(1,143mm x 1321mm x 305mm)
16.4cu. ft (.46 cu.m) Capacity
1000 Lbs (454 kg) Box Capacity
Tilting Box
Hinged (Bottom) Tailgate
Load Guard
TIRES:
Front: 26x9-12 Ancla XT
(Extreme Terrain Tires)
Rear: 26x11-12 Ancla XT
(Extreme Terrain Tires)
SAFETY VIDEO TAPE:
Safety and Operational DVD
Operators Manual
*Engine HP is Provided by the
Engine Manufacturer to be Used
for Comparison Purposes Only,
Actual Operating HP will be
Less.
Safety and Operational DVD
Operators Manual
*Engine HP is Provided by the
Engine Manufacturer to be Used
for Comparison Purposes Only,
Actual Operating HP will be
Less.

CODE	ATTACHMENT IDENTIFIER	DESCRIPTION	SUGGESTED LIST PRICE USD ($)

Select One Code From Each Required Category

BASE MACHINE

F.O.B. Janesville, Wisconsin

5892M	XUV 855D S4 Camo *Base Machine Suggested List Price Does Not Include $500 USD Destination Charge.*	15,549.00

DESTINATION

0202	US/Canada	In Base Price
0195	Mexico	Same Price

XUV 855D S4 Camo
Continued

CODE	ATTACHMENT IDENTIFIER	DESCRIPTION	SUGGESTED LIST PRICE USD ($)
		DESTINATION Continued...	
0250		All Other Countries	Same Price
0179		Europe	312.00
		WHEELS WITH TIRES (FOUR)	
1001		Black Steel Wheels Ancla M-T Extreme Terrain Tire	In Base Price
		DRIVER SEAT	
2001		Bench Seat - Black	Same Price
		DELUXE CARGO BOX	
3000		Deluxe Cargo Box - with Paint	In Base Price
		OVERHEAD PROTECTION STRUCTURES (OPS)	
4000		OPS	In Base Price
		POWER AND FRONT PROTECTION PACKAGE	
5010		Manual Lift *Must order 5010 option code when ordering 6000 option code.*	In Base Price
		REAR PROTECTION PACKAGE	
5110		Less Rear Protection Package	In Base Price
		FRONT BRUSH GUARD	
6010		Less Front Brush Guard *Must order 6010 option code when ordering 5000 option code.*	In Base Price
		HOOD RACK	
6310		Less Front Hood Rack XUV *Must order 6310 option code when ordering 4002 option code.*	In Base Price
		Attachments-Order as Desired	
		Spanish North American Kit:	
9435		Spanish North American Operator's Manual and Decal Kit	No Charge
		ATTACHMENTS FOR FIELD CONVERSION	
		Blades:	
	LP25355	Heavy Duty POWERtach Blade - 72" *Available through Order Zone*	In Catalog
	LPPK140	POWERtach Deflector Shield *Available through Order Zone*	In Catalog

XUV 855D S4 Camo
Continued

CODE	ATTACHMENT IDENTIFIER	DESCRIPTION	SUGGESTED LIST PRICE USD ($)
		ATTACHMENTS FOR FIELD CONVERSION Continued...	
	LPPK120	POWERtach Markers *Available through Order Zone*	In Catalog
	LPPWBK72	POWERtach Poly Wear Bar *Available through Order Zone*	In Catalog
	LPPK150	POWERtach Rubber Squeegee *Available through Order Zone*	In Catalog
	LPPK160	POWERtach Skid Shoes *Available through Order Zone*	In Catalog
		Cabs/Roofs/Windshields:	
	BM23742	OPS Full No-Scratch Windshield *Not compatible with Deluxe Cab Frame. Compatible with poly cab.*	531.79
	BM23741	OPS Full Poly Windshield *Not compatible with Deluxe Cab Frame. Compatible with poly cab.*	423.71
	BM23743	OPS Glass Windshield with Wiper *Not compatible with Deluxe Cab Frame. Compatible with poly cab.*	874.19
	BM23740	OPS Half Poly Windshield *Not compatible with Deluxe Cab Frame.*	339.19
	BM24116	OPS Poly Roof - S4 (Black)	598.13
	BM24561	OPS Rear Panel *Part of the Poly cab, or can be mounted on the OPS alone. Requires full windshield, poly cab doors, and poly roof to complete poly cab.*	502.90
	LP10314	OPS Side Mirror - Left *Available through Order Zone.*	In Catalog
	LP10315	OPS Side Mirror - Right *Available through Order Zone.*	In Catalog
		Cargo Box Options / Storage:	
	BM23849	5 Gallon Pail Holder	38.51
	BM22772	Cargo Box Bed Mat	119.84
	BM22769	Cargo Box Divider	191.53
	BM22811	Cargo Box FenderGuard *Requires Rear Bumper*	191.53
	BM23694	Cargo Box Power Lift Kit	858.14
	BM22774	Cargo Box Side Extension Kit	511.46
	LP19880	Deluxe Cargo Box Cover - Black *Available through Order Zone*	In Catalog
	BM22980	Front Hood Rack *Requires Front Brush Guard.*	241.81

XUV 855D S4 Camo
Continued

CODE	ATTACHMENT IDENTIFIER	DESCRIPTION	SUGGESTED LIST PRICE USD ($)
		ATTACHMENTS FOR FIELD CONVERSION Continued...	
	LP30320	Fuel Pack *Available through Order Zone*	In Catalog
	LP19878	Gator Gear Organizer - Black *Available through Order Zone*	In Catalog
	LP19886	Gator Tool Box *Contact Dealer for pricing.*	In Catalog
	LP93117	OPS Overhead Organizer - Black *Available through Order Zone*	In Catalog
	LP93113	OPS Overhead Organizer - Camo *Available through Order Zone*	In Catalog
	LP46485	Ratcheting Rhino Grip *Available through Order Zone.*	In Catalog
	LP25929	Rhino Grip XL - Double *Available through Order Zone.*	In Catalog
	LP25928	Rhino Grip XL - Single *Available through Order Zone.*	In Catalog
	LP19882	Saw Press Bracket *Available through Order Zone*	In Catalog
	BM22775	Side Tool Rack	304.96
	LP93207	Soft Rear Screen and Organizer - Black *Available through Order Zone*	In Catalog
		Carts / Hitches:	
	LPPCT10LXATV	10AT Cart *Available through Order Zone*	In Catalog
	LPPCT17ATJD	17AT Cart *Available through Order Zone.*	In Catalog
	LPUT21JD	21 Steel Utility Cart *Available through Order Zone*	In Catalog
	PM05101	Ball Mount - 1.875 in. (48mm)	See Parts
	PM05201	Ball Mount - 2 in. (51mm)	See Parts
	BM22290	Drawbar - 2 in. (51mm)	38.51
		Custom & High Performance:	
	BM22703	Seat-Belt Comfort Strap (2) *Also compatible with Deluxe Cab.*	77.04

XUV 855D S4 Camo

Continued

CODE	ATTACHMENT IDENTIFIER	DESCRIPTION	SUGGESTED LIST PRICE USD ($)
		ATTACHMENTS FOR FIELD CONVERSION Continued...	
	BM24455	Stereo Mounting Kit *Includes mounting kit only; must choose one of the following three head units to have complete stereo:* *Radio, Heavy Duty AM / FM / WB / AUX (SWJHD1120)* *Radio, Heavy Duty AM / FM / WB / SAT / I-POD (SWJHD1620)* *Radio, AM / FM / WB / CD / AUX / SAT Ready (SWJHD3620)* *Must order head unit through Parts. Stereo Mounting Kit not compatible with Deluxe Cab.*	660.19
		Engine:	
	AM882530	Adaptor Parts for Engine Coolant Heater	See Parts
	AR87167	Engine Coolant Heater (110 Volt) *Requires adapter parts for engine coolant heater. Requires AM134805 Engine Block Heater Adapter.*	See Parts
		Hunting / Camo:	
	LP19884	Cargo Box Gun Mount - Black *Available through Order Zone*	In Catalog
	LP19879	Deluxe Cargo Box Cover- Camo *Available through Order Zone*	In Catalog
	LP19877	Gator Gear Organizer (Camo) *Available through Order Zone*	In Catalog
	LP10319	Gun Mount Kit - Overhead *Includes 2 Gun Boot VI.* *Available through Order Zone*	In Catalog
		Lights / Signals:	
	BM24726	Backup Alarm	74.56
	BM24013	Beacon Light *Requires OPS Poly Roof and OPS Switch Bank.*	219.36
	BM24591	Brake / Tail Light Kit	160.50
	BM24586	Deluxe Signal Light Kit *Includes Turn Signals (Front & Rear), 4-Way Flashers, Brake, Tail & Reverse Lights.*	374.50
	BM24587	Deluxe Signal Light Kit *Includes Turn Signals (Front & Rear) and 4-Way Flashers. Compatible with the 825i and 825i S4 vehicles equipped with the 3000 cargo box option code or 625i, 855D and 855D S4 vehicles equipped with the 3002 Cargo Box option code which already includes the brake & tail lights.*	171.20
	BM23442	Hella HID Sport Driving Lights *Requires OPS Switch Bank for OPS or poly roof mounting, or Front Brushguard for bumper mounting.*	935.19
	BM24108	Hella Performance Spot Lights *Requires OPS Switch Bank for OPS or poly roof mounting, or Front Brushguard for bumper mounting.*	343.47
	BM23370	Horn Kit	97.37

XUV 855D S4 Camo
Continued

CODE	ATTACHMENT IDENTIFIER	DESCRIPTION	SUGGESTED LIST PRICE USD ($)
		ATTACHMENTS FOR FIELD CONVERSION Continued...	
	BM24090	Long Range Light Kit *Can also mount behind front bumper cover directly to frame.* *Requires OPS Switch Bank for OPS or poly roof mounting, or Front Brushguard for brushguard mounting.*	191.53
	BM24016	Mid-Range Light Kit *Requires OPS Switch Bank for OPS or poly roof mounting. Can be installed on the front or rear of OPS or roof.*	123.06
	BM24273	Mid-Range Light Kit (rear S4 Only) *Requires OPS Switch Bank. Compatible with OPS Poly Roofs, or on the OPS alone.*	123.06
	BM24089	OPS Switch Bank *Accommodates up to three separate OPS accessory kits.*	67.41
		Protection:	
	BM23727	Deflector Plate	55.64
	BM24282	Floormat *Also front floormat on S4*	78.11
	BM24283	Floormat (S4 rear)	78.11
	BM24463	Front CV Guards	114.49
	BM22987	Heavy Duty Fender Guard *Compatible with Standard Front Bumper.*	215.07
	BM22841	Heavy Duty Front Brush Guard	249.31
	BM22767	Heavy Duty Rear Bumper	236.47
	BM22962	Rear CV Guards	114.49
	BM22773	Tail Light Protectors	89.89
		Seats / Wheels / Tires:	
	LP40897	Camoplast Tracks (855D) *Available through Order Zone*	In Catalog
		Sprayers / Pressure Washers:	
	LP33597	25 Gallon Bed Sprayer *Available through Order Zone*	In Catalog
	LP19490	25 Gallon Portable Sprayer *Available through Order Zone*	In Catalog
	LP20852	45 Gallon Bed Sprayer *Available through Order Zone*	In Catalog
	LP22908	45 Gallon High Performance Sprayer *Available through Order Zone*	In Catalog
	LP20485	45 Gallon Tow-Behind Sprayer *Available through Order Zone*	In Catalog
	LP20853	90 Gallon Bed Sprayer *Available through Order Zone*	In Catalog

XUV 855D S4 Camo

Continued

CODE	ATTACHMENT IDENTIFIER	DESCRIPTION	SUGGESTED LIST PRICE USD ($)
		ATTACHMENTS FOR FIELD CONVERSION Continued...	
	LP22909	90 Gallon High Performance Bed Sprayer *Available through Order Zone*	In Catalog
	LPGP2700GH	GatorPal High Pressure Washer (2700 psi, Honda engine) *Contact Dealer for pricing.*	In Catalog
	LPGP2700GS	GatorPal High Pressure Washer (2700 psi, Subaru engine) *Contact Dealer for pricing.*	In Catalog
	LPGP3000GH	GatorPal High Pressure Washer (3000 psi, Honda engine) *Contact Dealer for pricing.*	In Catalog
	LPGP3000GS	GatorPal High Pressure Washer (3000 psi, Subaru engine) *Contact Dealer for pricing.*	In Catalog
	LP22885	HP 150 in. Precision Boom *Compatible with all High Performance Sprayers* *Available through Order Zone*	In Catalog
	LP39963	HP 45 Gallon Sprayer - Tow Behind *Available through Order Zone*	In Catalog
	LP22884	HP Boomless Nozzles *Compatible with all High Performance Sprayers* *Available through Order Zone*	In Catalog
	LP22911	HP Standard Gator Boom *Compatible with all High Performance Sprayers* *Available through Order Zone*	In Catalog
		Winch:	
	BM24443	Warn® Winch (3000 lb) *Requires RE266640 positive cable and AN305976 ground cable to reach contactor.* *Requires 2-Inch Receiver Multi-Mount Kit for Front or Rear Receiver Mount.*	770.40
	BM23105	Winch - 2 Inch Receiver Multi-Mount Kit	225.77
	BM21392	Winch Accessories Kit *Accessory kit includes 1/2" shackle, 9,000 lbs. maximum capacity snatch block, (2) 1"x8' tree trunk protectors, and (1) pair of WARN winching gloves.*	129.47
		SERVICE CONTRACTS - RESIDENTIAL OWNERS/USE	
		Visit http://www.JohnDeere.com/ServicePlans for more information on John Deere Service Contracts. May not be Available in Parts of the U.S., Not Available in Canada. Price may vary due to driving distance and/or time from machine to dealership location.	
		John Deere Extended Service Plan - 2-Year Option *Available for T-Series, HPX and XUV utility vehicles only.)* *2-year extended service plan. (1 year of extended service protection);* *2-years of warranty transportation.*	399.99
		John Deere Extended Service Plan - 3-Year Option *3-year extended service plan. (2 years of extended service protection);* *3-years of warranty transportation.*	569.99

Standard-Duty 72 In. Front Blade
(For Gator Utility Vehicles, Crossover UV's and M-Gators)

Equipment for Base Machine

72-Inch Wide Straight Blade
Three-Position Manual Angling
Quick Installation for Both Frame and Hydraulic Lift
Two Adjustable Skid Shoes
Trip Protection
Replaceable Cutting Edge
Less Implement Lift Frame and Lift

CODE	ATTACHMENT IDENTIFIER	DESCRIPTION	SUGGESTED LIST PRICE USD ($)
		Select One Code From Each Required Category	
		BASE MACHINE	
8014M		Standard-Duty 72 In. Front Blade (For Gator Utility Vehicles, Crossover UV's and M-Gators)	633.00
		LIFT FRAME KITS	
1000		Implement Lift Frame Kit *For use on XUV 625i, 825i, 855D and A2 & A3 Utility Vehicles Only.*	514.00
1001		Implement Lift Frame Kit *For Use on TS, TX, TX TURF, TH, and M-Gator A1 Utility Vehicles.*	442.00
1003		Implement Lift Frame Kit *For use on XUV 620i, 850D and HPX Utility Vehicles.*	514.00
1010		Less Implement Lift Frame Kit	In Base Price
		POWER / HYDRAULIC LIFT KITS	
2000		Hydraulic Implement Lift Kit *For use on XUV 620i, 850D and HPX Utility Vehicles. Includes Adapter Kit for hydraulic implement lift.*	896.00
2001		Power Implement Lift Kit *For Use on TS, TX, TX TURF, TH, and M-Gator A1 Utility Vehicles.*	730.00
2002		Hydraulic Implement Lift Kit *For Use on XUV 625i, 825i, 855D and A2 & A3 Utility Vehicles Only.*	823.00
2010		Less Implement Lift Kit	In Base Price
		ATTACHMENTS - ORDER AS DESIRED	
		European CE Kit:	
9100		European CE Conversion Kit for 72 In. Front Blade *This Code Must be Ordered to Receive a 72 In. Front Blade Which Meets CE Mark Requirements. Kit Includes Pictorial Decals and Operator's Manuals in English, French, Italian, German and Spanish.*	No Charge

ATTACHMENTS FOR FIELD CONVERSION

Blades:

Standard-Duty 72 In. Front Blade
(For Gator Utility Vehicles, Crossover UV's and M-Gators)

Continued

CODE	ATTACHMENT IDENTIFIER	DESCRIPTION	SUGGESTED LIST PRICE USD ($)
		ATTACHMENTS FOR FIELD CONVERSION Continued...	
	BM23029	Plow Markers	38.51
		Custom & High Performance:	
	VGB10544	Heavy Duty Front Suspension *For Use On HPX, 620 and 850 XUV Utility Vehicles Only.* *Recommended for Crossover Vehicles equipped with* *Front Blade or Cab.*	249.31
		Miscellaneous:	
	BM24354	Adapter Kit for Hydraulic Implement Lift *For use on XUV 620i, 850D and HPX Utility Vehicles.*	78.11
	BM22606	Hydraulic Implement Lift Kit *For use on HPX, XUV 620i, 625i, 825i, 850D, 855D and Military A2 & A3 Utility Vehicles.*	880.61
	VGB10086	Implement Lift Frame Kit *For Use on TS, TX, TX TURF, TH, TE and M-Gator A1 Utility Vehicles.*	472.94
	BM23081	Implement Lift Frame Kit *For use on XUV 625i, 825i, 855D and A2 Utility Vehicles Only.*	549.99
	BM24344	Implement Lift Frame Kit *For use on XUV 620i, 850D and HPX Utility Vehicles.*	549.99
	BM21459	Power Implement Lift Kit *For use on TS, TX, TX TURF, TH and Military A1 Utility Vehicles.*	781.10
	TY15650	Rear Tire Chains, 25x11-12 (pair)	See Parts
	TY25802	Tire Chains (for HPAT 24x9.5-10)	See Parts
	TY25326	Tire Chains for 26x10.50-12 Turf Drive Tires *For all Wheel Steer Tractors.*	See Parts
		Seats / Wheels / Tires:	
	TY24328	Tire Chains (Pair) for 24x12.00-12 In. Drive Tires *For Turf and Knobby Tires. Not Intended for use on all Four Rear Tires.*	See Parts
	TY15958	Tire Chains (Pair) for 26x12-12 Tires	See Parts
	TY25800	Tire Chains (for HPAP 24x10.5-10 or HPAT 24x12-10)	See Parts
	TY25814	Tire Chains (for Turf/Hard Surface 24x12.00-10)	See Parts

Standard-Duty 72 In. V-Blade
(For Gator Utility Vehicles, Crossover UV's and M-Gators)

Equipment for Base Machine

72-Inch Wide Adjustable V-Blade
Converts from V-Position to an Inverted Scoop to a Straight Blade
Quick Installation for Both Frame and Hydraulic Lift
Two Adjustable Skid Shoes
Trip Protection
Replaceable Cutting Edge
Less Implement Lift Frame and Lift

CODE	ATTACHMENT IDENTIFIER	DESCRIPTION	SUGGESTED LIST PRICE USD ($)
		Select One Code From Each Required Category	
		BASE MACHINE	
8015M		Standard-Duty 72 In. V-Blade (For Gator Utility Vehicles, Crossover UV's and M-Gators)	789.00
		LIFT FRAME KITS	
1000		Implement Lift Frame Kit *For use on XUV 625i, 825i, 855D and A2 & A3 Utility Vehicles Only.*	514.00
1001		Implement Lift Frame Kit *For Use on TS, TX, TX TURF, TH, and M-Gator A1 Utility Vehicles.*	442.00
1003		Implement Lift Frame Kit *For use on XUV 620i, 850D and HPX Utility Vehicles.*	514.00
1010		Less Implement Lift Frame Kit	In Base Price
		POWER / HYDRAULIC LIFT KITS	
2000		Hydraulic Implement Lift Kit *For use on XUV 620i, 850D and HPX Utility Vehicles. Includes Adapter Kit for hydraulic implement lift.*	896.00
2001		Power Implement Lift Kit *For Use on TS, TX, TX TURF, TH, and M-Gator A1 Utility Vehicles.*	730.00
2002		Hydraulic Implement Lift Kit *For Use on XUV 625i, 825i, 855D and A2 & A3 Utility Vehicles Only.*	823.00
2010		Less Implement Lift Kit	In Base Price
		ATTACHMENTS - ORDER AS DESIRED	
		European CE Kit:	
9100		European CE Conversion Kit for 72 In. V-Blade *This Code Must be Ordered to Receive a 72 In. V-Blade Which Meets CE Mark Requirements. Kit Includes Pictorial Decals and Operator's Manuals in English, French, Italian, German and Spanish.*	No Charge
		ATTACHMENTS FOR FIELD CONVERSION	

Standard-Duty 72 In. V-Blade
(For Gator Utility Vehicles, Crossover UV's and M-Gators)

Continued

CODE	ATTACHMENT IDENTIFIER	DESCRIPTION	SUGGESTED LIST PRICE USD ($)
		ATTACHMENTS FOR FIELD CONVERSION Continued...	
		Blades:	
	BM23029	Plow Markers	38.51
		Custom & High Performance:	
	VGB10544	Heavy Duty Front Suspension *For Use On HPX, 620 and 850 XUV Utility Vehicles Only.* *Recommended for Crossover Vehicles equipped with* *Front Blade or Cab.*	249.31
		Miscellaneous:	
	BM24354	Adapter Kit for Hydraulic Implement Lift *For use on XUV 620i, 850D and HPX Utility Vehicles.*	78.11
	BM22606	Hydraulic Implement Lift Kit *For use on HPX, XUV 620i, 625i, 825i, 850D, 855D and Military A2 & A3 Utility Vehicles.*	880.61
	VGB10086	Implement Lift Frame Kit *For Use on TS, TX, TX TURF, TH, TE and M-Gator A1 Utility Vehicles.*	472.94
	BM23081	Implement Lift Frame Kit *For use on XUV 625i, 825i, 855D and A2 Utility Vehicles Only.*	549.99
	BM24344	Implement Lift Frame Kit *For use on XUV 620i, 850D and HPX Utility Vehicles.*	549.99
	BM21459	Power Implement Lift Kit *For use on TS, TX, TX TURF, TH and Military A1 Utility Vehicles.*	781.10
	TY15650	Rear Tire Chains, 25x11-12 (pair)	See Parts
	TY25802	Tire Chains (for HPAT 24x9.5-10)	See Parts
	TY25326	Tire Chains for 26x10.50-12 Turf Drive Tires *For all Wheel Steer Tractors.*	See Parts
		Seats / Wheels / Tires:	
	TY24328	Tire Chains (Pair) for 24x12.00-12 In. Drive Tires *For Turf and Knobby Tires. Not Intended for use on all Four Rear Tires.*	See Parts
	TY15958	Tire Chains (Pair) for 26x12-12 Tires	See Parts
	TY25800	Tire Chains (for HPAP 24x10.5-10 or HPAT 24x12-10)	See Parts
	TY25814	Tire Chains (for Turf/Hard Surface 24x12.00-10)	See Parts

SERVICE CONTRACTS - RESIDENTIAL OWNERS/USE

Visit http://www.JohnDeere.com/ServicePlans for more information on John Deere Service Contracts. May not be Available in Parts of the U.S., Not Available in Canada. Price may vary due to driving distance and/or time from machine to dealership location.

	John Deere Extended Service Plan - 2-Year Option *Available for T-Series, HPX and XUV utility vehicles only.)* *2-year extended service plan. (1 year of extended service protection);* *2-years of warranty transportation.*	399.99

Standard-Duty 72 In. V-Blade
(For Gator Utility Vehicles, Crossover UV's and M-Gators)

Continued

CODE	ATTACHMENT IDENTIFIER	DESCRIPTION	SUGGESTED LIST PRICE USD ($)
		SERVICE CONTRACTS - RESIDENTIAL OWNERS/USE Continued...	
		John Deere Extended Service Plan - 3-Year Option *3-year extended service plan. (2 years of extended service protection);* *3-years of warranty transportation.*	569.99

Gator CX Utility Vehicle with KT (Knobby) Tires

Equipment for Base Machine

ENGINE:
9.5 Engine HP (286cc), Single Cylinder, Air Cooled, 4-cycle Gasoline Overhead Valves
Pressure Lubrication System
Replaceable Single Dry-Type Element Air Cleaner with Remote Intake
3.0 Gallon (11.4 L) Fuel Capacity
Magneto Solid-State Ignition
ELECTRICAL:
Electric Start
15 amp, Regulated Alternator
160 CCA Battery
Two 25 Watt Headlights
TRANSAXLE/TRANSMISSION:
Continuously Variable Transmission
Enclosed Transaxle
Differential Lock
Wet Disk Brakes
Wet Disk Hand/Foot Operated Park Brake
1-In. Forged Rear Axles
Two Rear Drive Wheels
15 mph (24 kph) Maximum Forward Speed
STEERING/SUSPENSION:
Rack and Pinion Steering
Independent Front Suspension
Dual Rate Spring-Over Shock with Adjustable Preload Single A-arm Design
1-In. Cast Nodular Iron Front Spindles
Triple Rate Spring-Over-Shock Rear Suspension With Adjustable Preload
FRAME/STYLED PARTS:
Arc-Welded Uni-Body Frame
PC/ASA Hood and Fenders
OPERATOR STATION:
High-Back Bucket Seats
Fore-aft Slide Rail Adjustment on Driver's Seat
Walk-Through Platform
Hip Restraint Bars for Driver and Passenger
Passenger Grab Handle
Glove Box
Two Cupholders
Fuel Sight Gauge
Hourmeter
12v DC Outlet
DIMENSIONS:
95.7 In. Long X 49 In. Wide x 44 In. High (2.4 x 1.2 x 1.1m)
800 Lb. (363 kg) Total Payload Capacity Which Includes 200 Lb. (91 kg) Driver, 200 Lb. (91 kg)Passenger, and 400 Lb. (182 kg)in Cargo Box
Towing Capacity: 600 lbs. (272 kg)
Tongue Weight: 60 lbs. (27 kg)
CARGO BOX:
28.9 In. Long x 38.2 In. Wide x 7.8 In Deep (735 x 970 x 198mm)
5.0 Ft. (.14 cu m) Capacity
400 Lbs. (182 kg) Box Capacity
High-Density Cross-Linked Polyethylene
Molded-in Divider Slots and Tie Down Attaching Points
Tilting Box
Hinged, Removable Tailgate
Load Guard
Hold Down Latch and Prop Rod
TIRES:
Front: 20 x 10-8 4PR Cayman KT (Knobby)
Rear: 20 x 10-8 4PR Cayman KT (Knobby)
SAFETY VIDEO TAPE:
Safety and Operational Videotape
*Engine HP is Provided by the Engine Manufacturer to be Used for Comparison Purposes Only, Actual Operating HP will be Less.

CODE	ATTACHMENT IDENTIFIER	DESCRIPTION	SUGGESTED LIST PRICE USD ($)

Select One Code From Each Required Category

BASE MACHINE

F.O.B. Janesville, Wisconsin

391AM	Gator CX Utility Vehicle with KT (Knobby) Tires *Not Available for Sale in California.*	5,699.00

DESTINATION

0202	US/Canada	In Base Price
0230	Australia/New Zealand	Same Price
0179	Europe	25.00
0195	Mexico	Same Price
0250	All Other Countries	Same Price

ATTACHMENTS FOR FIELD CONVERSION

Cabs/Roofs/Windshields:

Gator CX Utility Vehicle with KT (Knobby) Tires

Continued

CODE	ATTACHMENT IDENTIFIER	DESCRIPTION	SUGGESTED LIST PRICE USD ($)
		ATTACHMENTS FOR FIELD CONVERSION Continued...	
	BM21278	Full Folding Windshield *Requires Sun Canopy.*	256.80
	BM24468	Sun Canopy	See Parts
	VGB10066	Windscreen	267.50
		Cargo Box Options / Storage:	
	BM22875	Cargo Box Lift Kit	681.59
	BM21451	Cargo Box Mat	71.69
	VGB10069	Cargo Box Power Lift Kit *Serial numbers 0-039999.*	521.14
	VGB10070	Manual Lift Assist	See Parts
		Carts / Hitches:	
	LPPCT10LXATV	10AT Cart *Available through Order Zone*	In Catalog
	PM05101	Ball Mount - 1.875 in. (48mm)	See Parts
	PM05201	Ball Mount - 2 in. (51mm)	See Parts
	BM23989	Drawbar, 1.25 In. (38mm)	35.31
	VGB10045	Front Receiver Hitch	66.34
	BM21580	Rear Hitch Kit	57.79
	BM21658	Rear Receiver Hitch *Ball Mount Not Included.*	81.31
		Custom & High Performance:	
	BM22004	Heavy-Duty Front Suspension Kit	219.17
	BM23195	High Capacity Alternator	371.29
		Engine:	
	AW26806	Oil Filter Kit	See Parts
	GY20896	Spark Arrester Screen for Muffler	See Parts
		Lights / Signals:	
	VGB10074	Back-up Alarm	101.66
	BM21293	Brake-Tail Light Kit	157.29
	VGB10068	Deluxe Light Kit *Includes Turn Signals, 4-Way Flashers, Brake, and Tail Lights.*	288.90
	TY16156	Hand Light Kit	See Parts
	BM23193	Horn Kit	97.37
		Protection:	

Gator CX Utility Vehicle with KT (Knobby) Tires

Continued

CODE	ATTACHMENT IDENTIFIER	DESCRIPTION	SUGGESTED LIST PRICE USD ($)
		ATTACHMENTS FOR FIELD CONVERSION Continued...	
	BM21277	Floormat	57.79
	VGB10067	Front Bumper	177.61
	LP92634	Large Deluxe Seat Cover - Yellow *Available through Order Zone.*	In Catalog
	LP92334	Large Seat Cover - Yellow *Available through Order Zone.*	In Catalog
		Seats / Wheels / Tires:	
	BM19123	31 Lb. Plastic Rear Wheel Weights	65.27
	TY16200	Tire Chains (Pair) for 20x10-8, 20x10-10	See Parts
		Sprayers / Pressure Washers:	
	LP20850	25 Gallon Bed Sprayer *Available through Order Zone.*	In Catalog
	LP19490	25 Gallon Portable Sprayer *Available through Order Zone*	In Catalog
	LP20485	45 Gallon Tow-Behind Sprayer *Available through Order Zone*	In Catalog
	LP22885	HP 150 in. Precision Boom *Compatible with all High Performance Sprayers* *Available through Order Zone*	In Catalog
	LP39963	HP 45 Gallon Sprayer - Tow Behind *Available through Order Zone*	In Catalog
	LP22884	HP Boomless Nozzles *Compatible with all High Performance Sprayers* *Available through Order Zone*	In Catalog
		SERVICE CONTRACTS - RESIDENTIAL OWNERS/USE	
		Visit http://www.JohnDeere.com/ServicePlans for more information on John Deere Service Contracts. May not be Available in Parts of the U.S., Not Available in Canada. Price may vary due to driving distance and/or time from machine to dealership location.	
		John Deere Extended Service Plan - 3-Year Option *3-year extended service plan. (1 year of extended service protection); 3-years of warranty transportation.*	199.99
		John Deere Extended Service Plan - 4-Year Option *4-year extended service plan. (2 years of extended service protection); 4-years of warranty transportation.*	249.99

Gator CX Utility Vehicle with LS (Lawn & Street) Tires

Equipment for Base Machine

ENGINE:
9.5 Engine HP (286cc), Single Cylinder, Air Cooled, 4-cycle Gasoline Overhead Valves
Pressure Lubrication System
Replaceable Single Dry-Type Element Air Cleaner with Remote Intake
3.0 Gallon (11.4 L) Fuel Capacity
Magneto Solid-State Ignition
ELECTRICAL:
Electric Start
15 amp, Regulated Alternator
160 CCA Battery
Two 25 Watt Headlights
TRANSAXLE/TRANSMISSION:
Continuously Variable Transmission
Enclosed Transaxle
Differential Lock
Wet Disk Brakes
Wet Disk Hand/Foot Operated Park Brake
1-In. Forged Rear Axles
Two Rear Drive Wheels
15 mph (24 kph) Maximum Forward Speed
STEERING/SUSPENSION:
Rack and Pinion Steering
Independent Front Suspension
Dual Rate Spring-Over Shock With Adjustable Preload Single A-arm Design
1-In. Cast Nodular Iron Front Spindles
Triple Rate Spring-Over-Shock Rear Suspension With Adjustable Preload
FRAME/STYLED PARTS:
Arc-Welded Uni-Body Frame
PC/ASA Hood and Fenders
OPERATOR STATION:
High-Back Bucket Seats
Fore-aft Slide Rail Adjustment on Driver's Seat
Walk-Through Platform
Hip Restraint Bars for Driver and Passenger
Passenger Grab Handle
Glove Box
Two Cupholders
Fuel Sight Gauge
Hourmeter
12v DC Outlet
DIMENSIONS:
95.7 In. Long X 49 In. Wide x 44 In. High (2.4 x 1.2 x 1.1m)
800 Lb. (363 kg) Total Payload Capacity Which Includes 200 Lb. (91 kg) Driver, 200 Lb. (91 kg)Passenger, and 400 Lb. (182 kg)in Cargo Box
Towing Capacity: 600 lbs. (272 kg)
Tongue Weight: 60 lbs. (27 kg)
CARGO BOX:
28.9 In. Long x 38.2 In. Wide x 7.8 In Deep (735 x 970 x 198mm)
5.0 Ft. (.14 cu m) Capacity
400 Lbs. (182 kg) Box Capacity
High-Density Cross-Linked Polyethylene
Molded-in Divider Slots and Tie Down Attaching Points
Tilting Box
Hinged, Removable Tailgate
Load Guard
Hold Down Latch and Prop Rod
TIRES:
Front: 20 x 8.5-8 4PR Cayman LS (Lawn & Street)
Rear: 20 x 10-8 4PR Cayman LS (Lawn & Street)
SAFETY VIDEO TAPE:
Safety and Operational Videotape
*Engine HP is Provided by the Engine Manufacturer to be Used for Comparison Purposes Only, Actual Operating HP will be Less.

CODE	ATTACHMENT IDENTIFIER	DESCRIPTION	SUGGESTED LIST PRICE USD ($)

Select One Code From Each Required Category

BASE MACHINE

F.O.B. Janesville, Wisconsin

3919M	Gator CX Utility Vehicle with LS (Lawn & Street) Tires *Not Available for Sale in California.*	5,649.00

DESTINATION

0202	US/Canada	In Base Price
0230	Australia/New Zealand	Same Price
0179	Europe	25.00
0195	Mexico	Same Price
0250	All Other Countries	Same Price

ATTACHMENTS FOR FIELD CONVERSION

Cabs/Roofs/Windshields:

Gator CX Utility Vehicle with LS (Lawn & Street) Tires
Continued

CODE	ATTACHMENT IDENTIFIER	DESCRIPTION	SUGGESTED LIST PRICE USD ($)
		ATTACHMENTS FOR FIELD CONVERSION Continued...	
	BM21278	Full Folding Windshield *Requires Sun Canopy.*	256.80
	BM24468	Sun Canopy	See Parts
	VGB10066	Windscreen	267.50
		Cargo Box Options / Storage:	
	BM22875	Cargo Box Lift Kit	681.59
	BM21451	Cargo Box Mat	71.69
	VGB10069	Cargo Box Power Lift Kit *Serial numbers 0-039999.*	521.14
	VGB10070	Manual Lift Assist	See Parts
		Carts / Hitches:	
	LPPCT10LXATV	10AT Cart *Available through Order Zone*	In Catalog
	PM05101	Ball Mount - 1.875 in. (48mm)	See Parts
	PM05201	Ball Mount - 2 in. (51mm)	See Parts
	BM23989	Drawbar, 1.25 In. (38mm)	35.31
	VGB10045	Front Receiver Hitch	66.34
	BM21580	Rear Hitch Kit	57.79
	BM21658	Rear Receiver Hitch *Ball Mount Not Included.*	81.31
		Custom & High Performance:	
	BM22004	Heavy-Duty Front Suspension Kit	219.17
	BM23195	High Capacity Alternator	371.29
		Engine:	
	AW26806	Oil Filter Kit	See Parts
	GY20896	Spark Arrester Screen for Muffler	See Parts
		Lights / Signals:	
	VGB10074	Back-up Alarm	101.66
	BM21293	Brake-Tail Light Kit	157.29
	VGB10068	Deluxe Light Kit *Includes Turn Signals, 4-Way Flashers, Brake, and Tail Lights.*	288.90
	TY16156	Hand Light Kit	See Parts
	BM23193	Horn Kit	97.37
		Protection:	

Gator CX Utility Vehicle with LS (Lawn & Street) Tires

Continued

CODE	ATTACHMENT IDENTIFIER	DESCRIPTION	SUGGESTED LIST PRICE USD ($)
		ATTACHMENTS FOR FIELD CONVERSION Continued...	
	BM21277	Floormat	57.79
	VGB10067	Front Bumper	177.61
	LP92634	Large Deluxe Seat Cover - Yellow *Available through Order Zone.*	In Catalog
	LP92334	Large Seat Cover - Yellow *Available through Order Zone.*	In Catalog
		Seats / Wheels / Tires:	
	BM19123	31 Lb. Plastic Rear Wheel Weights	65.27
	TY16200	Tire Chains (Pair) for 20x10-8, 20x10-10	See Parts
		Sprayers / Pressure Washers:	
	LP20850	25 Gallon Bed Sprayer *Available through Order Zone.*	In Catalog
	LP19490	25 Gallon Portable Sprayer *Available through Order Zone*	In Catalog
	LP20485	45 Gallon Tow-Behind Sprayer *Available through Order Zone*	In Catalog
	LP22885	HP 150 in. Precision Boom *Compatible with all High Performance Sprayers* *Available through Order Zone*	In Catalog
	LP39963	HP 45 Gallon Sprayer - Tow Behind *Available through Order Zone*	In Catalog
	LP22884	HP Boomless Nozzles *Compatible with all High Performance Sprayers* *Available through Order Zone*	In Catalog

SERVICE CONTRACTS - RESIDENTIAL OWNERS/USE

Visit http://www.JohnDeere.com/ServicePlans for more information on John Deere Service Contracts. May not be Available in Parts of the U.S., Not Available in Canada. Price may vary due to driving distance and/or time from machine to dealership location.

John Deere Extended Service Plan - 3-Year Option *3-year extended service plan. (1 year of extended service protection); 3-years of warranty transportation.*	199.99
John Deere Extended Service Plan - 4-Year Option *4-year extended service plan. (2 years of extended service protection); 4-years of warranty transportation.*	249.99

Gator TS

Equipment for Base Machine

ENGINE:
11 Engine HP *(351cc)
Single Cylinder, Air-cooled, 4-Cycle Gasoline
Overhead Valves
Full Pressure Lubrication System (Filter Optional)
Replaceable Single Element (Dry Type) Air Cleaner with Remote Intake
5.2 Gallon (19.7 L) Fuel Capacity
Solid State 12V Ignition
ELECTRICAL:
Electric Start
13 Amp, Regulated Alternator
340 CCA Battery
Two 37.5 Watt Halogen Headlights
TRANSAXLE/TRANSMISSION:
Continuously Variable Transmission (CVT)
Single-speed Transaxle
20 mph (32.2 kph) Maximum Forward Speed
Rear Traction Assist
Rear Internal Wet Disk Brakes
Wet Disk Hand-Operated Park Brake
1-3/8 In. (35 mm) Forged Rear Axles
Two Rear Drive Wheels
STEERING/FRONT SUSPENSION:
Rack and Pinion Steering
Independent Front Suspension
Spring-Over-Shock Single A-Arm Design
1 In. (25 mm) Front Spindles
FRAME/STYLED PARTS:
Arc Welded Uni-Body Frame
Thermoplastic Elastomer Polyolefin (TPO) Hood and Fenders
OPERATOR STATION:
Mid-Back Bucket Seats
Walk-Through Platform
Park Brake Indicator Light
Hip Restraint Bars (Driver and Passenger)
Passenger Grab Handle
Glove Box
Two Cup Holders
Fuel Gauge
Hour Meter
12V DC Outlet
DIMENSIONS:
101.4 In. Long x 60 In. Wide x 43.6 In. High (2575 mm x 1524 mm)
900 Lbs. (408 kg.) Total Payload Capacity Which Includes:
200 Lbs. (91 kg) Driver,
200 Lbs. (91 kg) Passenger
and 500 Lbs (227 kg) in Cargo Box
Towing Capacity: 900 Lbs. (408 kg)
11.25 ft. Turning Radius
Ground Clearance (Under Transaxle): 6 In. (153 mm)
Ground Clearance (Under Foot Platform): 9.8 In. (330 mm)
CARGO BOX:
39.5 In. Long x 49 In. Wide x 9 In. Deep (1003 mm x 1245 mm x 229 mm)
10.1 Ft (.29 m) Capacity
500 Lbs. (227 kg) Box Capacity
Tilting Box
Hinged (Bottom) Tailgate
Removable
Load Guard
Hold Down Latch and Prop Rod
TIRES:
Front: 2-22.5x10.00-8 4 Ply Cayman KT (Knobby)
Rear: 2-25x12.00-9 4 Ply Cayman KT (Knobby)
SAFETY VIDEO TAPE:
Safety & Operational Video
*Engine HP is Provided by the Engine Manufacturer to be Used For Comparison Purposes Only, Actual Operating HP will be Less.

CODE	ATTACHMENT IDENTIFIER	DESCRIPTION	SUGGESTED LIST PRICE USD ($)

Select One Code From Each Required Category

BASE MACHINE

F.O.B. Janesville, Wisconsin

560KM	Gator TS *Base Machine Suggested List Price Does Not Include $300 USD Destination Charge.*	6,499.00

DESTINATION

0202	US/Canada	In Base Price
0230	Australia/New Zealand	Same Price
0195	Mexico	Same Price

WHEELS WITH TIRES (FOUR)

1000	Cayman KT (Knobby) Tires	In Base Price
1001	Cayman Turf Tires	Same Price

Gator TS
Continued

CODE	ATTACHMENT IDENTIFIER	DESCRIPTION	SUGGESTED LIST PRICE USD ($)
		WHEELS WITH TIRES (FOUR) Continued...	
1002		Cayman AT (All Terrain) Tires	225.00
		DRIVER SEAT	
2000		Non Adjustable Seat	In Base Price
2001		Adjustable Seat	83.00
		CARGO BOX POWER LIFT	
4000		Cargo Box Power Lift *Prop Rod Not Included.*	720.00
4010		Less Power Lift *Prop Rod Included.*	In Base Price
		PROTECTION PACKAGE	
5200		Package Consists of: Front Bumper / Brush Guard, Bedliner, Front Fender Guard and Rubber Floormats. *Must order 5310 option code when ordering 5200 option code.* *Package Priced at 10% Discount.*	783.00
5210		Less Protection Package	In Base Price
		FRONT BUMPER & BRUSH GUARD	
5300		Front Bumper & Brush Guard	317.00
5310		Less Front Bumper & Brush Guard	In Base Price
		REAR RECEIVER HITCH	
6000		1.25 In. (38mm) Rear Receiver Hitch	74.00
6010		Less Rear Receiver Hitch	In Base Price
		ATTACHMENTS FOR FIELD CONVERSION	
		Cabs/Roofs/Windshields:	
	BM22600	Deluxe Glass Cab *Includes Front Windshield (Excluding Wiper), Glass Doors and Glass Rear Window.* *Remote Cargo Box Release Kit is required if vehicle is not equipped with Cargo Box Power Lift.* *Heavy Duty Front Suspension Kit is recommended with Cab installation.*	4,086.33
	BM22138	Electrical Kit *Kit Includes Wiring Harness, Overhead Console and Roof Headliner.*	219.36
	BM21645	Exterior Mirrors (2) Kit *Requires Deluxe Glass Cab.*	173.34

Gator TS
Continued

CODE	ATTACHMENT IDENTIFIER	DESCRIPTION	SUGGESTED LIST PRICE USD ($)
		ATTACHMENTS FOR FIELD CONVERSION Continued...	
	BM23578	Forced-Air Heater Kit	2,269.47
	BM21656	Interior Light Kit - Deluxe Cab *Requires Electrical Kit.*	58.86
	BM21646	Visor (1) Kit - Deluxe cab	70.61
	BM21466	Windscreen	280.34
	BM21648	Windshield Washer Kit *Requires Electrical Kit.*	177.61
	BM21462	Windshield Wiper Kit *Requires Electrical Kit.*	303.89
		Cargo Box Options / Storage:	
	VGB10133	Cargo Box Bed Mat	113.41
	BM23765	Cargo Box Power Lift Kit	770.40
	BM23456	Front Hood Rack *Requires Front Bumper / Brush Guard for mounting. Not compatible with Mauser Cab.*	241.81
	LP93337	Gator Gear Organizer - Black *Available through OrderZone.*	In Catalog
	LPMB4611GB	Gator Tool Box *Contact Dealer for pricing.*	In Catalog
	BM21474	Poly Bedliner 40 In.	309.23
	BM21653	Remote Cargo Box Release Kit *Required if equipped with Deluxe Glass Cab and manual cargo box release. Compatible for use with steel cargo box only.*	115.56
	BM22776	Side Storage Box	215.07
		Carts / Hitches:	
	LPPCT10LXATV	10AT Cart *Available through Order Zone*	In Catalog
	LPPCT17ATJD	17AT Cart *Available through Order Zone.*	In Catalog
	LPUT21JD	21 Steel Utility Cart *Available through Order Zone*	In Catalog
	PM05101	Ball Mount - 1.875 in. (48mm)	See Parts
	PM05201	Ball Mount - 2 in. (51mm)	See Parts
	BM23989	Drawbar, 1.25 In. (38mm)	35.31
	BM17801	Rear Hitch	44.94
	BM23839	Rear Receiver Hitch, 1.25 in. (38mm) *No drawbar nor ball is included with the hitch.*	79.19

Gator TS
Continued

CODE	ATTACHMENT IDENTIFIER	DESCRIPTION	SUGGESTED LIST PRICE USD ($)
		ATTACHMENTS FOR FIELD CONVERSION Continued...	
		Custom & High Performance:	
	BM20414	Heavy-Duty Suspension Kit *Recommended when using a deluxe cab or front mounted blades. Heavy-Duty Suspension is standard on Gator TE.*	165.86
	BM22610	High Capacity Alternator Kit (TS Only)	356.31
	BM22543	Rough Terrain Kit *Throttle stabilizer.*	97.37
		Engine:	
	AM108382	Recoil Start Kit	See Parts
		Hunting / Camo:	
	LP10312	Gun Boot IV GATOR Metal Mounting Bracket *Available through Order Zone.*	In Catalog
	LP10316	Gun Boot IV, Black *Compatible with Gun Boot IV Metal Mounting Bracket. Available through Order Zone.*	In Catalog
	LP93103	Vehicle Cover, Cab / ROPS - Camo	In Catalog
		Lights / Signals:	
	BM23013	Backup Alarm Kit	101.66
	BM22405	Beacon Light	381.99
	BM21649	Beacon Light Kit - Deluxe Cab *Requires Electrical Kit.*	371.29
	BM22546	Brake/Tail Light Kit	158.36
	BM22720	Deluxe Light Kit *Front lights double as side mirrors, rear lights function as turn signals and brake lights.*	391.61
	BM21651	Front Light Kit - Deluxe Cab *Requires Electrical Kit.*	293.19
	BM23193	Horn Kit	97.37
	BM21652	Rear Light Kit - Deluxe Cab *Requires Electrical Kit.*	217.21
		Protection:	
	BM25000	Floor Mat	78.11
	BM23458	Front Bumper *Includes Front Receiver Hitch.*	191.53
	BM23459	Front Bumper/Brush Guard *Includes front receiver hitch.*	339.19
	BM23457	Front Fender Guard *Requires Front Bumper or Front Bumper/Brushguard*	142.31
	LP93547	Gator Cover *Not compatible with Deluxe Cab.* *Available through Order Zone.*	In Catalog

Gator TS
Continued

CODE	ATTACHMENT IDENTIFIER	DESCRIPTION	SUGGESTED LIST PRICE USD ($)
		ATTACHMENTS FOR FIELD CONVERSION Continued...	
	LP92624	Seat Cover (Deluxe Medium) - Yellow *Available through Order Zone.*	In Catalog
	LP92324	Seat Cover - Yellow *Available through Order Zone.*	In Catalog
	LP93107	Vehicle Cover, Cab / ROPS - Black *Fits all Models Equipped with OPS and Deluxe Cab Structure.*	In Catalog
		Seats / Wheels / Tires:	
	BM23799	Parts For Adjustable Driver's Seat	88.81
	TY24328	Tire Chains (Pair) for 24x12.00-12 In. Drive Tires	See Parts
	TY15958	Tire Chains (Pair) for 26x12-12 Tires	See Parts
		Spanish North American Kit:	
	M153216	Spanish Operator's Manual	See Parts
		Sprayers / Pressure Washers:	
	LP20850	25 Gallon Bed Sprayer *Available through Order Zone.*	In Catalog
	LP20851	45 Gallon Bed Sprayer	In Catalog
	LP22908	45 Gallon High Performance Sprayer	In Catalog
	LP20485	45 Gallon Tow-Behind Sprayer	In Catalog
	LPGP2700GH	GatorPal High Pressure Washer (2700 psi, Honda engine) *Contact Dealer for pricing.*	In Catalog
	LPGP2700GS	GatorPal High Pressure Washer (2700 psi, Subaru engine) *Contact Dealer for pricing.*	In Catalog
	LP22885	HP 150 in. Precision Boom *Compatible with all High Performance Sprayers* *Available through Order Zone*	In Catalog
	LP39963	HP 45 Gallon Sprayer - Tow Behind	In Catalog
	LP22884	HP Boomless Nozzles	In Catalog
	LP22911	HP Standard Gator Boom	In Catalog
		Winch:	
	BM24442	Warn® Winch (3000 Lb.) *Requires Front Bumper or Front Bumper/Brush Guard for Front Mount.* *Requires Rear Receiver Hitch for Rear Mount.* *Requires Rear Multi-Mount Harness (AM137110) for Rear Mount.* *VGA10459 (battery wiring harness) required for 6X4 vehicles (TH Gas, TH Diesel, M-Gator A1).*	879.54
	BM21392	Winch Accessories Kit	129.47

SERVICE CONTRACTS - RESIDENTIAL OWNERS/USE

Gator TS

Continued

CODE	ATTACHMENT IDENTIFIER	DESCRIPTION	SUGGESTED LIST PRICE USD ($)
		SERVICE CONTRACTS - RESIDENTIAL OWNERS/USE Continued... *Visit http://www.JohnDeere.com/ServicePlans for more information on John Deere Service Contracts. May not be Available in Parts of the U.S., Not Available in Canada. Price may vary due to driving distance and/or time from machine to dealership location.*	
		John Deere Extended Service Plan - 2-Year Option *Available for T-Series, HPX and XUV utility vehicles only.) 2-year extended service plan. (1 year of extended service protection); 2-years of warranty transportation.*	139.99
		John Deere Extended Service Plan - 3-Year Option *3-year extended service plan. (2 years of extended service protection); 3-years of warranty transportation.*	249.99

Gator TX

Equipment for Base Machine

ENGINE:
15.5 Engine HP (675cc),
V-twin, Air-cooled,
4-Cycle Gasoline
Overhead Valves
Full Pressure Lubrication
System
Replaceable Single Element
(Dry Type) Air Cleaner
with Remote Intake
5.2 Gallon (19.7 L) Fuel
Capacity
Solid State 12V Ignition
ELECTRICAL:
Electric Start
16.6 Amp, Regulated Alternator
340 CCA Battery
Two 37.5 Watt Halogen
Headlights
TRANSAXLE/TRANSMISSION:
Continuously Variable
Transmission (CVT)
Single-speed Transaxle
20 mph (32.2 kph) Maximum
Forward Speed
Rear Traction Assist
Front and Rear Hydraulic
Disk Brakes
Rear Mechanical Disk Hand
Operated Park Brake
Two Rear Drive Wheels
1-5/16 In. (33.5mm)
Forged Rear Axle
STEERING/SUSPENSION:
Rack and Pinion Steering
Front Suspension
Independent Spring-Over-Shock
Single A-Arm Design
Rear Suspension
Triple Rate Adjustable
Coil-Over-Shock
1 In. (25mm) Front Spindles
FRAME/STYLED PARTS:
Arc Welded Uni-Body Frame
Thermoplastic Elastomer
Polyolefin (TPO) Hood
and Fenders
OPERATOR STATION:
High-Back Bucket
Seats
Walk-Through Platform
Park Brake Indicator Light
Hip Restraint Bars
(Driver and Passenger)
Passenger Grab Handle
Glove Box
Two Cup Holders
Fuel Gauge
Hour Meter
12V DC Outlet
DIMENSIONS:
109.6 In. Long x 60 In.
Wide x 47.6 In. High
(2788 mm x 1524 mm x
1209 mm)
1000 Lbs. (454 kg.) Total
Payload Capacity Which
Includes:
200 Lbs. (91 kg) Driver,
200 Lbs. (91 kg) Passenger
and 600 Lbs (272 kg) in
Cargo Box
Towing Capacity: 1000 Lbs.
(454 kg)
12.00 ft. Turning Radius
Ground Clearance (Under
Transaxle): 5.7 In. (145 mm)
Ground Clearance (Under Foot
Platform): 10.6 In. (270 mm)
CARGO BOX:
45 In. Long x 52 In. Wide
x 12 In. Deep (1143 mm x
1320 mm x 304.8 mm)
16.4 Cu.Ft (.46 m) Capacity
600 Lbs. (272 kg) Box
Capacity
Tilting Box
Hinged (Bottom) Tailgate,
Removable
Load Guard
Removeable Cargo Box Side
Panels (Flat Bed)
Hold Down Latch and Prop Rod
TIRES:
Front: 2-22x9.50-10 4 Ply
Cayman AT (All Terrain)
Rear: 2-24x10.50-10 4 Ply
Cayman AT (All Terrain)
Miscellaneous:
Rear Receiver Hitch
SAFETY VIDEO TAPE:
Safety & Operational Video
*Engine HP is Provided by the
Engine Manufacturer to be
Used For Comparison
Purposes Only, Actual
Operating HP will be
Less.

CODE	ATTACHMENT IDENTIFIER	DESCRIPTION	SUGGESTED LIST PRICE USD ($)

Select One Code From Each Required Category

BASE MACHINE

F.O.B. Janesville, Wisconsin

560GM	Gator TX *Not Available for Sale in California.* *Base Machine Suggested List Price Does Not Include $300 USD Destination Charge.*	7,999.00

DESTINATION

0202	US/Canada	In Base Price
0230	Australia/New Zealand	Same Price
0195	Mexico	Same Price

WHEELS WITH TIRES (FOUR)

Gator TX
Continued

CODE	ATTACHMENT IDENTIFIER	DESCRIPTION	SUGGESTED LIST PRICE USD ($)
		WHEELS WITH TIRES (FOUR) Continued...	
1001		Cayman Turf Tires	134.00
1002		Cayman AT (All Terrain) Tires	In Base Price
1004		Cayman XT (Xtreme Terrain) Tires	211.00
		DRIVER SEAT	
2000		Non Adjustable Seat	In Base Price
2001		Adjustable Seat	83.00
		DELUXE CARGO BOX	
3000		Deluxe Cargo Box with Paint & Reflectors	In Base Price
3002		Deluxe Cargo Box with Reflectors & Spray-On Liner	264.00
3003		Deluxe Cargo Box with Brake & Tail Light, Spray-On Liner & Tail Light Protector	496.00
		CARGO BOX POWER LIFT	
4000		Cargo Box Power Lift	720.00
4010		Less Power Lift *Latch and Prop Rod Included.*	In Base Price
		FRONT PROTECTION PACKAGE	
5000		Front Protection Package Package Consists of: Front Bumper / Brush Guard, Front Fender Guard and Rubber Floormats. *Package Priced at 10% Discount.*	504.00
5010		Less Front Protection Package	In Base Price
		REAR PROTECTION PACKAGE	
5100		Rear Protection Package Package Consists of: Rear Bumper, Bedmat Kit, Cargo Box FenderGuard. *Package Priced at 10% Discount.*	494.00
5110		Less Rear Protection Package	In Base Price
		ATTACHMENTS FOR FIELD CONVERSION	
		Cabs/Roofs/Windshields:	
	BM22600	Deluxe Glass Cab *Includes Front Windshield (Excluding Wiper), Glass Doors and Glass Rear Window.* *Remote Cargo Box Release Kit is required if vehicle is not equipped with Cargo Box Power Lift.* *Heavy Duty Front Suspension Kit is recommended with Cab installation.*	4,086.33

Gator TX
Continued

CODE	ATTACHMENT IDENTIFIER	DESCRIPTION	SUGGESTED LIST PRICE USD ($)
		ATTACHMENTS FOR FIELD CONVERSION Continued...	
	BM22138	Electrical Kit *Kit Includes Wiring Harness, Overhead Console and Roof Headliner.*	219.36
	BM21645	Exterior Mirrors (2) Kit *Requires Deluxe Glass Cab.*	173.34
	BM23578	Forced-Air Heater Kit	2,269.47
	BM21656	Interior Light Kit - Deluxe Cab *Requires Electrical Kit.*	58.86
	BM21646	Visor (1) Kit - Deluxe cab	70.61
	BM21466	Windscreen	280.34
	BM21648	Windshield Washer Kit *Requires Electrical Kit.*	177.61
	BM21462	Windshield Wiper Kit *Requires Electrical Kit.*	303.89
		Cargo Box Options / Storage:	
	BM23849	5 Gallon Pail Holder	38.51
	BM22772	Cargo Box Bed Mat	119.84
	BM22769	Cargo Box Divider	191.53
	BM22811	Cargo Box FenderGuard *Requires Heavy Duty Rear Bumper*	191.53
	BM23734	Cargo Box Power Lift	770.40
	BM22774	Cargo Box Side Extension Kit	511.46
	LP19880	Deluxe Cargo Box Cover - Black *Available through Order Zone*	In Catalog
	BM23456	Front Hood Rack *Requires Front Bumper / Brush Guard for mounting. Not compatible with Mauser Cab.*	241.81
	LP30320	Fuel Pack *Available through Order Zone*	In Catalog
	LP19878	Gator Gear Organizer - Black *Available through Order Zone*	In Catalog
	LP19886	Gator Tool Box *Contact Dealer for pricing.*	In Catalog
	LP46485	Ratcheting Rhino Grip *Available through Order Zone.*	In Catalog
	LP45543	Refreshment Center *Available through Order Zone.*	In Catalog

Gator TX
Continued

CODE	ATTACHMENT IDENTIFIER	DESCRIPTION	SUGGESTED LIST PRICE USD ($)
		ATTACHMENTS FOR FIELD CONVERSION Continued...	
	BM24804	Remote Cargo Box Release Kit *Required if equipped with Deluxe Glass Cab and manual cargo box release (no power lift).*	115.56
	LP25929	Rhino Grip XL - Double *Available through Order Zone.*	In Catalog
	LP25928	Rhino Grip XL - Single *Available through Order Zone.*	In Catalog
	LP19882	Saw Press Bracket *Available through Order Zone*	In Catalog
	BM22776	Side Storage Box	215.07
	BM22775	Side Tool Rack	304.96
		Carts / Hitches:	
	LPPCT10LXATV	10AT Cart *Available through Order Zone*	In Catalog
	LPPCT17ATJD	17AT Cart *Available through Order Zone.*	In Catalog
	LPUT21JD	21 Steel Utility Cart *Available through Order Zone*	In Catalog
	PM05101	Ball Mount - 1.875 in. (48mm)	See Parts
	PM05201	Ball Mount - 2 in. (51mm)	See Parts
	BM23989	Drawbar, 1.25 In. (38mm)	35.31
		Custom & High Performance:	
	BM20414	Heavy-Duty Suspension Kit *Recommended when using a deluxe cab or front mounted blades. Heavy-Duty Suspension is standard on Gator TE.*	165.86
	BM22770	High Capacity Alternator Kit (TX)	555.33
	BM22543	Rough Terrain Kit *Throttle stabilizer.*	97.37
		Engine:	
	BM22889	Fly Wheel Cover	63.13
	AM108146	Spark Arrester Screen for Muffler	See Parts
		Hunting / Camo:	
	LP19884	Cargo Box Gun Mount - Black *Double gun boot mount. Includes (2) Gun Boot 6.0 Transports*	In Catalog
	LP19879	Deluxe Cargo Box Cover- Camo	In Catalog
	LP19877	Gator Gear Organizer (Camo)	In Catalog
	LP93103	Vehicle Cover, Cab / ROPS - Camo	In Catalog

Gator TX
Continued

CODE	ATTACHMENT IDENTIFIER	DESCRIPTION	SUGGESTED LIST PRICE USD ($)
		ATTACHMENTS FOR FIELD CONVERSION Continued...	
		Lights / Signals:	
	BM23013	Backup Alarm Kit	101.66
	BM22405	Beacon Light	381.99
	BM21649	Beacon Light Kit - Deluxe Cab *Requires Electrical Kit.*	371.29
	BM24591	Brake / Tail Light Kit	160.50
	BM22685	Deluxe Light Kit *Kit includes backup lights, four-way flashers, turn signals, brake lights, taillights, front position lights.*	395.90
	BM21651	Front Light Kit - Deluxe Cab *Requires Electrical Kit.*	293.19
	BM23193	Horn Kit	97.37
	BM21652	Rear Light Kit - Deluxe Cab *Requires Electrical Kit.*	217.21
		Protection:	
	BM25000	Floor Mat	78.11
	BM23458	Front Bumper *Includes Front Receiver Hitch.*	191.53
	BM23459	Front Bumper/Brush Guard *Includes front receiver hitch.*	339.19
	BM23457	Front Fender Guard *Requires Front Bumper or Front Bumper/Brushguard*	142.31
	LP93547	Gator Cover *Not compatible with Deluxe Cab.* *Available through Order Zone.*	In Catalog
	BM22767	Heavy Duty Rear Bumper	236.47
	LP92634	Large Deluxe Seat Cover - Yellow *Available through Order Zone.*	In Catalog
	LP92334	Large Seat Cover - Yellow *Available through Order Zone.*	In Catalog
	LP92333	Seat Cover - Camo *Available through Order Zone.*	In Catalog
	BM22773	Tail Light Protectors	89.89
	LP93107	Vehicle Cover, Cab / ROPS - Black *Fits all Models Equipped with OPS and Deluxe Cab Structure.*	In Catalog
		Seats / Wheels / Tires:	
	BM23799	Parts For Adjustable Driver's Seat	88.81
	TY25800	Tire Chains (for HPAP 24x10.5-10 or HPAT 24x12-10)	See Parts

Gator TX
Continued

CODE	ATTACHMENT IDENTIFIER	DESCRIPTION	SUGGESTED LIST PRICE USD ($)
		ATTACHMENTS FOR FIELD CONVERSION Continued...	
	TY25814	Tire Chains (for Turf/Hard Surface 24x12.00-10)	See Parts
		Spanish North American Kit:	
	M153217	Spanish Operator's Manual	See Parts
		Sprayers / Pressure Washers:	
	LP33597	25 Gallon Bed Sprayer	In Catalog
	LP20852	45 Gallon Bed Sprayer	In Catalog
	LP22908	45 Gallon High Performance Sprayer	In Catalog
	LP20485	45 Gallon Tow-Behind Sprayer	In Catalog
	LPGP2700GH	GatorPal High Pressure Washer (2700 psi, Honda engine) *Contact Dealer for pricing.*	In Catalog
	LPGP2700GS	GatorPal High Pressure Washer (2700 psi, Subaru engine) *Contact Dealer for pricing.*	In Catalog
	LP22885	HP 150 in. Precision Boom *Compatible with all High Performance Sprayers* *Available through Order Zone*	In Catalog
	LP39963	HP 45 Gallon Sprayer - Tow Behind	In Catalog
	LP22884	HP Boomless Nozzles	In Catalog
	LP22911	HP Standard Gator Boom	In Catalog
		Winch:	
	BM24442	Warn® Winch (3000 Lb.) *Requires Front Bumper or Front Bumper/Brush Guard for Front Mount.* *Requires Rear Receiver Hitch for Rear Mount.* *Requires Rear Multi-Mount Harness (AM137110) for Rear Mount.* *VGA10459 (battery wiring harness) required for 6X4 vehicles (TH Gas, TH Diesel, M-Gator A1).*	879.54
	BM21392	Winch Accessories Kit	129.47
		SERVICE CONTRACTS - RESIDENTIAL OWNERS/USE	
		Visit http://www.JohnDeere.com/ServicePlans for more information on John Deere Service Contracts. May not be Available in Parts of the U.S., Not Available in Canada. Price may vary due to driving distance and/or time from machine to dealership location.	
		John Deere Extended Service Plan - 2-Year Option *Available for T-Series, HPX and XUV utility vehicles only.)* *2-year extended service plan. (1 year of extended service protection);* *2-years of warranty transportation.*	139.99
		John Deere Extended Service Plan - 3-Year Option *3-year extended service plan. (2 years of extended service protection);* *3-years of warranty transportation.*	249.99

Gator TX - California Model

Equipment for Base Machine

ENGINE:
13.5 Engine HP (401cc)
Single Cylinder, Air-cooled, 4-Cycle Gasoline
Overhead Valves
Full Pressure Lubrication System
Replaceable Single Element (Dry Type) Air Cleaner with Remote Intake
5.2 Gallon (19.7 L) Fuel Capacity
Solid State 12V Ignition
ELECTRICAL:
Electric Start
16.6 Amp, Regulated Alternator
340 CCA Battery
Two 37.5 Watt Halogen Headlights
TRANSAXLE/TRANSMISSION:
Continuously Variable Transmission (CVT)
Single-speed Transaxle
20 mph (32.2 kph) Maximum Forward Speed
Rear Traction Assist
Front and Rear Hydraulic Disk Brakes
Rear Mechanical Disk Hand Operated Park Brake
Two Rear Drive Wheels
1-5/16 In. (33.5mm) Forged Rear Axle
STEERING/SUSPENSION:
Rack and Pinion Steering
Front Suspension
Independent Spring-Over-Shock Single A-Arm Design
Rear Suspension
Triple Rate Adjustable Coil-Over-Shock
1 In. (25mm) Front Spindles
FRAME/STYLED PARTS:
Arc Welded Uni-Body Frame
Thermoplastic Elastomer Polyolefin (TPO) Hood and Fenders
OPERATOR STATION:
High-Back Bucket Seats
Walk-Through Platform
Park Brake Indicator Light
Hip Restraint Bars (Driver and Passenger)
Passenger Grab Handle
Glove Box
Two Cup Holders
Fuel Gauge
Hour Meter
12V DC Outlet
DIMENSIONS:
109.6 In. Long x 60 In. Wide x 47.6 In. High (2788 mm x 1524 mm x 1209 mm)
1000 Lbs. (454 kg.) Total Payload Capacity Which Includes:
200 Lbs. (91 kg) Driver,
200 Lbs. (91 kg) Passenger
and 600 Lbs (272 kg) In. Cargo Box
Towing Capacity: 1000 Lbs. (454 kg)
12.00 ft. Turning Radius
Ground Clearance (Under Transaxle): 5.7 In. (145 mm)
Ground Clearance (Under Foot Platform): 10.6 In. (270 mm)
CARGO BOX:
45 In. Long x 52 In. Wide x 12 In. Deep (1143 mm x 1320 mm x 304.8 mm)
16.4 Cu.Ft (.46 m) Capacity
600 Lbs. (272 kg) Box Capacity
Tilting Box
Hinged (Bottom) Tailgate, Removable
Load Guard
Removeable Cargo Box Side Panels (Flat Bed)
Hold Down Latch and Prop Rod
TIRES:
Front: 2-22x9.50-10 4 Ply Cayman AT (All Terrain)
Rear: 2-24x10.50-10 4 Ply Cayman AT (All Terrain)
Miscellaneous:
Rear Receiver Hitch
SAFETY VIDEO TAPE:
Safety & Operational Video
*Engine HP is Provided by the Engine Manufacturer to be Used For Comparison Purposes Only, Actual Operating HP will be Less.

CODE	ATTACHMENT IDENTIFIER	DESCRIPTION	SUGGESTED LIST PRICE USD ($)

Select One Code From Each Required Category

BASE MACHINE

F.O.B. Janesville, Wisconsin

560HM	Gator TX - California Model *Availability Only in California.* *Base Machine Suggested List Price Does Not Include $300 USD Destination Charge.*	8,199.00

WHEELS WITH TIRES (FOUR)

1001	Cayman Turf Tires	134.00
1002	Cayman AT (All Terrain) Tires	In Base Price
1004	Cayman XT (Xtreme Terrain) Tires	211.00

DRIVER SEAT

Gator TX - California Model

Continued

CODE	ATTACHMENT IDENTIFIER	DESCRIPTION	SUGGESTED LIST PRICE USD ($)
		DRIVER SEAT Continued...	
2000		Non Adjustable Seat	In Base Price
2001		Adjustable Seat	83.00
		DELUXE CARGO BOX	
3000		Deluxe Cargo Box with Paint & Reflectors	In Base Price
3002		Deluxe Cargo Box with Reflectors & Spray-On Liner	264.00
3003		Deluxe Cargo Box with Brake & Tail Light, Spray-On Liner & Tail Light Protector	496.00
		CARGO BOX POWER LIFT	
4000		Cargo Box Power Lift	720.00
4010		Less Power Lift *Latch and Prop Rod Included.*	In Base Price
		FRONT PROTECTION PACKAGE	
5000		Front Protection Package Package Consists of: Front Bumper / Brush Guard, Front Fender Guard and Rubber Floormats. *Package Priced at 10% Discount.*	504.00
5010		Less Front Protection Package	In Base Price
		REAR PROTECTION PACKAGE	
5100		Rear Protection Package Package Consists of: Rear Bumper, Bedmat Kit, Cargo Box FenderGuard. *Package Priced at 10% Discount.*	494.00
5110		Less Rear Protection Package	In Base Price
		ATTACHMENTS FOR FIELD CONVERSION	
		Cabs/Roofs/Windshields:	
	BM22600	Deluxe Glass Cab *Includes Front Windshield (Excluding Wiper), Glass Doors and Glass Rear Window.* *Remote Cargo Box Release Kit is required if vehicle is not equipped with Cargo Box Power Lift.* *Heavy Duty Front Suspension Kit is recommended with Cab installation.*	4,086.33
	BM22138	Electrical Kit *Kit Includes Wiring Harness, Overhead Console and Roof Headliner.*	219.36
	BM21645	Exterior Mirrors (2) Kit *Requires Deluxe Glass Cab.*	173.34

Gator TX - California Model
Continued

CODE	ATTACHMENT IDENTIFIER	DESCRIPTION	SUGGESTED LIST PRICE USD ($)
		ATTACHMENTS FOR FIELD CONVERSION Continued...	
	BM23578	Forced-Air Heater Kit	2,269.47
	BM21656	Interior Light Kit - Deluxe Cab *Requires Electrical Kit.*	58.86
	BM21646	Visor (1) Kit - Deluxe cab	70.61
	BM21466	Windscreen	280.34
	BM21648	Windshield Washer Kit *Requires Electrical Kit.*	177.61
	BM21462	Windshield Wiper Kit *Requires Electrical Kit.*	303.89
		Cargo Box Options / Storage:	
	BM23849	5 Gallon Pail Holder	38.51
	BM22772	Cargo Box Bed Mat	119.84
	BM22769	Cargo Box Divider	191.53
	BM22811	Cargo Box FenderGuard *Requires Heavy Duty Rear Bumper*	191.53
	BM23734	Cargo Box Power Lift	770.40
	BM22774	Cargo Box Side Extension Kit	511.46
	LP19880	Deluxe Cargo Box Cover - Black *Available through Order Zone*	In Catalog
	BM23456	Front Hood Rack *Requires Front Bumper / Brush Guard for mounting. Not compatible with Mauser Cab.*	241.81
	LP30320	Fuel Pack *Available through Order Zone*	In Catalog
	LP19878	Gator Gear Organizer - Black *Available through Order Zone*	In Catalog
	LP19886	Gator Tool Box *Contact Dealer for pricing.*	In Catalog
	LP46485	Ratcheting Rhino Grip *Available through Order Zone.*	In Catalog
	LP45543	Refreshment Center *Available through Order Zone.*	In Catalog
	BM24804	Remote Cargo Box Release Kit *Required if equipped with Deluxe Glass Cab and manual cargo box release (no power lift).*	115.56
	LP25929	Rhino Grip XL - Double *Available through Order Zone.*	In Catalog

Gator TX - California Model
Continued

CODE	ATTACHMENT IDENTIFIER	DESCRIPTION	SUGGESTED LIST PRICE USD ($)
		ATTACHMENTS FOR FIELD CONVERSION Continued...	
	LP25928	Rhino Grip XL - Single *Available through Order Zone.*	In Catalog
	LP19882	Saw Press Bracket *Available through Order Zone*	In Catalog
	BM22776	Side Storage Box	215.07
	BM22775	Side Tool Rack	304.96
		Carts / Hitches:	
	LPPCT10LXATV	10AT Cart *Available through Order Zone*	In Catalog
	LPPCT17ATJD	17AT Cart *Available through Order Zone.*	In Catalog
	LPUT21JD	21 Steel Utility Cart *Available through Order Zone*	In Catalog
	PM05101	Ball Mount - 1.875 in. (48mm)	See Parts
	PM05201	Ball Mount - 2 in. (51mm)	See Parts
	BM23989	Drawbar, 1.25 In. (38mm)	35.31
		Custom & High Performance:	
	BM20414	Heavy-Duty Suspension Kit *Recommended when using a deluxe cab or front mounted blades. Heavy-Duty Suspension is standard on Gator TE.*	165.86
	BM22770	High Capacity Alternator Kit (TX)	555.33
	BM22543	Rough Terrain Kit *Throttle stabilizer.*	97.37
		Engine:	
	BM22889	Fly Wheel Cover	63.13
	AM108146	Spark Arrester Screen for Muffler	See Parts
		Hunting / Camo:	
	LP19884	Cargo Box Gun Mount - Black *Double gun boot mount. Includes (2) Gun Boot 6.0 Transports*	In Catalog
	LP19879	Deluxe Cargo Box Cover- Camo	In Catalog
	LP19877	Gator Gear Organizer (Camo)	In Catalog
	LP93103	Vehicle Cover, Cab / ROPS - Camo	In Catalog
		Lights / Signals:	
	BM23013	Backup Alarm Kit	101.66
	BM22405	Beacon Light	381.99

Gator TX - California Model

Continued

CODE	ATTACHMENT IDENTIFIER	DESCRIPTION	SUGGESTED LIST PRICE USD ($)
		ATTACHMENTS FOR FIELD CONVERSION Continued...	
	BM21649	Beacon Light Kit - Deluxe Cab *Requires Electrical Kit.*	371.29
	BM24591	Brake / Tail Light Kit	160.50
	BM22685	Deluxe Light Kit *Kit includes backup lights, four-way flashers, turn signals, brake lights, taillights, front position lights.*	395.90
	BM21651	Front Light Kit - Deluxe Cab *Requires Electrical Kit.*	293.19
	BM23193	Horn Kit	97.37
	BM21652	Rear Light Kit - Deluxe Cab *Requires Electrical Kit.*	217.21
		Protection:	
	BM25000	Floor Mat	78.11
	BM23458	Front Bumper *Includes Front Receiver Hitch.*	191.53
	BM23459	Front Bumper/Brush Guard *Includes front receiver hitch.*	339.19
	BM23457	Front Fender Guard *Requires Front Bumper or Front Bumper/Brushguard*	142.31
	LP93547	Gator Cover *Not compatible with Deluxe Cab.* *Available through Order Zone.*	In Catalog
	BM22767	Heavy Duty Rear Bumper	236.47
	LP92634	Large Deluxe Seat Cover - Yellow *Available through Order Zone.*	In Catalog
	LP92334	Large Seat Cover - Yellow *Available through Order Zone.*	In Catalog
	LP92333	Seat Cover - Camo *Available through Order Zone.*	In Catalog
	BM22773	Tail Light Protectors	89.89
	LP93107	Vehicle Cover, Cab / ROPS - Black *Fits all Models Equipped with OPS and Deluxe Cab Structure.*	In Catalog
		Seats / Wheels / Tires:	
	BM23799	Parts For Adjustable Driver's Seat	88.81
	TY25800	Tire Chains (for HPAP 24x10.5-10 or HPAT 24x12-10)	See Parts
	TY25814	Tire Chains (for Turf/Hard Surface 24x12.00-10)	See Parts
		Spanish North American Kit:	
	M153217	Spanish Operator's Manual	See Parts

Gator TX - California Model

Continued

CODE	ATTACHMENT IDENTIFIER	DESCRIPTION	SUGGESTED LIST PRICE USD ($)
		ATTACHMENTS FOR FIELD CONVERSION Continued...	
		Sprayers / Pressure Washers:	
	LP33597	25 Gallon Bed Sprayer	In Catalog
	LP20852	45 Gallon Bed Sprayer	In Catalog
	LP22908	45 Gallon High Performance Sprayer	In Catalog
	LP20485	45 Gallon Tow-Behind Sprayer	In Catalog
	LPGP2700GH	GatorPal High Pressure Washer (2700 psi, Honda engine) *Contact Dealer for pricing.*	In Catalog
	LPGP2700GS	GatorPal High Pressure Washer (2700 psi, Subaru engine) *Contact Dealer for pricing.*	In Catalog
	LP22885	HP 150 in. Precision Boom *Compatible with all High Performance Sprayers* *Available through Order Zone*	In Catalog
	LP39963	HP 45 Gallon Sprayer - Tow Behind	In Catalog
	LP22884	HP Boomless Nozzles	In Catalog
	LP22911	HP Standard Gator Boom	In Catalog
		Winch:	
	BM24442	Warn® Winch (3000 Lb.) *Requires Front Bumper or Front Bumper/Brush Guard for Front Mount.* *Requires Rear Receiver Hitch for Rear Mount.* *Requires Rear Multi-Mount Harness (AM137110) for Rear Mount.* *VGA10459 (battery wiring harness) required for 6X4 vehicles (TH Gas, TH Diesel, M-Gator A1).*	879.54
	BM21392	Winch Accessories Kit	129.47
		SERVICE CONTRACTS - RESIDENTIAL OWNERS/USE	
		Visit http://www.JohnDeere.com/ServicePlans for more information on John Deere Service Contracts. May not be Available in Parts of the U.S., Not Available in Canada. Price may vary due to driving distance and/or time from machine to dealership location.	
		John Deere Extended Service Plan - 2-Year Option *Available for T-Series, HPX and XUV utility vehicles only.)* *2-year extended service plan. (1 year of extended service protection);* *2-years of warranty transportation.*	139.99
		John Deere Extended Service Plan - 3-Year Option *3-year extended service plan. (2 years of extended service protection);* *3-years of warranty transportation.*	249.99

Gator TH 6X4 Gas

Equipment for Base Machine

ENGINE:
15.5 Engine HP (675cc)
Twin Cylinder, Air-cooled, 4-Cycle Gasoline
Overhead Valves
Full Pressure Lubrication System with Replaceable Oil Filter
Replaceable Single Element (Dry Type) Air Cleaner
5.0 Gallon (18.9 L) Fuel Capacity
Spark Arresting Muffler
Solid State 12V Ignition
ELECTRICAL:
Electric Start
16.6 Amp, Regulated Alternator
340 CCA Battery
Two 37.5 Watt Halogen Headlights
TRANSAXLE/TRANSMISSION:
Continuously Variable Transmission (CVT)
Single-speed Transaxle
20 mph (32.2 kph) Maximum Forward Speed
Rear Traction Assist
Rear Internal Wet Disk Brakes
Wet Disk Hand-Operated Park Brake
1-3/8 In. (35 mm) Forged Rear Axles
Four Rear Drive Wheels
Heavy-Duty H60 Roller Chain
STEERING/FRONT SUSPENSION:
Rack and Pinion Steering
Independent Front Suspension
Spring-Over-Shock Single A-Arm Design
1 In. (25 mm) Front Spindles
FRAME/STYLED PARTS:
Arc Welded Uni-Body Frame
Thermoplastic Elastomer Polyolefin (TPO) Hood and Fenders
OPERATOR STATION:
High-Back Bucket Seats
Walk-Through Platform
Park Brake Indicator Light
Traction Assist Indicator Light
Hip Restraint Bars (Driver and Passenger)
Passenger Grab Handle
Glove Box
Two Cup Holders
Fuel Gauge
Hour Meter
12V DC Outlet
DIMENSIONS:
105.9 In. Long x 60 In. Wide x 43.6 In. High (2689 mm x 1524 mm x 1107 mm)
1400 Lbs. (635 kg.) Total Payload Capacity Which Includes:
200 Lbs. (91 kg) Driver,
200 Lbs. (91 kg) Passenger and 1000 Lbs (454 kg) in Cargo Box
Towing Capacity: 1400 Lbs. (635 kg)
12.3 ft. Turning Radius
Ground Clearance (Under Transaxle): 6.7 In. (170 mm)
Ground Clearance (Under Foot Platform): 9.8 In. (330 mm)
CARGO BOX:
45 In. Long x 52 In. Wide x 12 In. Deep (1143 mm x 1320 mm x 304.8 mm)
16.4 Cu Ft (.46 m) Capacity
1000 Lbs. (454 kg) Box Capacity
Tilting Box
Hinged (Bottom) Tailgate, Removable
Load Guard
Removable Cargo Box Side Panels (Flat Bed)
Hold Down Latch and Prop Rod
TIRES:
Front: 2-22.5x10.00-8 4 Ply Cayman KT (Knobby)
Rear: 4-25x12.00-9 4 Ply Cayman KT (Knobby)
SAFETY VIDEO TAPE:
Safety & Operational Video
*Engine HP is Provided by the Engine Manufacturer to be Used For Comparison Purposes Only, Actual Operating HP will be Less.

CODE	ATTACHMENT IDENTIFIER	DESCRIPTION	SUGGESTED LIST PRICE USD ($)

Select One Code From Each Required Category

BASE MACHINE

F.O.B. Janesville, Wisconsin

5615M	Gator TH 6X4 Gas *Not Available for Sale in California.* *Base Machine Suggested List Price Does Not Include $300 USD Destination Charge.*	9,699.00

DESTINATION

0202	US/Canada	In Base Price
0230	Australia/New Zealand	Same Price
0195	Mexico	Same Price

WHEELS WITH TIRES (SIX)

Gator TH 6X4 Gas

Continued

CODE	ATTACHMENT IDENTIFIER	DESCRIPTION	SUGGESTED LIST PRICE USD ($)
		WHEELS WITH TIRES (SIX) Continued...	
1000		Cayman KT (Knobby) Tires	In Base Price
1001		Cayman Turf Tires	Same Price
1002		Cayman AT (All Terrain) Tires	338.00
		DRIVER SEAT	
2000		Non Adjustable Seat	In Base Price
2001		Adjustable Seat	83.00
		DELUXE CARGO BOX	
3000		Deluxe Cargo Box with Paint & Reflectors	In Base Price
3002		Deluxe Cargo Box with Reflectors & Spray-On Liner	264.00
3003		Deluxe Cargo Box with Brake & Tail Light, Spray-On Liner & Tail Light Protector	496.00
		CARGO BOX POWER LIFT	
4000		Cargo Box Power Lift	802.00
4010		Less Power Lift *Latch and Prop Rod Included.*	In Base Price
		FRONT PROTECTION PACKAGE	
5000		Front Protection Package Package Consists of: Front Bumper / Brush Guard, Front Fender Guard and Rubber Floormats. *Package Priced at 10% Discount.*	504.00
5010		Less Front Protection Package	In Base Price
		REAR PROTECTION PACKAGE	
5100		Rear Protection Package Package Consists of: Rear Bumper and Bedmat Kit. *Package Priced at 10% Discount.*	321.00
5110		Less Rear Protection Package	In Base Price
		REAR RECEIVER HITCH	
6000		1.25 In. (38mm) Rear Receiver Hitch	74.00
6010		Less Rear Receiver Hitch	In Base Price

ATTACHMENTS FOR FIELD CONVERSION

Gator TH 6X4 Gas

Continued

CODE	ATTACHMENT IDENTIFIER	DESCRIPTION	SUGGESTED LIST PRICE USD ($)
		ATTACHMENTS FOR FIELD CONVERSION Continued...	
		Cabs/Roofs/Windshields:	
	BM22600	Deluxe Glass Cab *Includes Front Windshield (Excluding Wiper), Glass Doors and Glass Rear Window.* *Remote Cargo Box Release Kit is required if vehicle is not equipped with Cargo Box Power Lift.* *Heavy Duty Front Suspension Kit is recommended with Cab installation.*	4,086.33
	BM22138	Electrical Kit *Kit Includes Wiring Harness, Overhead Console and Roof Headliner.*	219.36
	BM21645	Exterior Mirrors (2) Kit *Requires Deluxe Glass Cab.*	173.34
	BM23578	Forced-Air Heater Kit	2,269.47
	BM21656	Interior Light Kit - Deluxe Cab *Requires Electrical Kit.*	58.86
	BM21646	Visor (1) Kit - Deluxe cab	70.61
	BM21466	Windscreen	280.34
	BM21648	Windshield Washer Kit *Requires Electrical Kit.*	177.61
	BM21462	Windshield Wiper Kit *Requires Electrical Kit.*	303.89
		Cargo Box Options / Storage:	
	BM23849	5 Gallon Pail Holder	38.51
	BM22772	Cargo Box Bed Mat	119.84
	BM22769	Cargo Box Divider	191.53
	BM22811	Cargo Box FenderGuard *Requires Heavy Duty Rear Bumper*	191.53
	BM23759	Cargo Box Power Lift	779.00
	BM22774	Cargo Box Side Extension Kit	511.46
	LP19880	Deluxe Cargo Box Cover - Black *Available through Order Zone*	In Catalog
	BM23456	Front Hood Rack *Requires Front Bumper / Brush Guard for mounting. Not compatible with Mauser Cab.*	241.81
	LP30320	Fuel Pack *Available through Order Zone*	In Catalog
	LP19878	Gator Gear Organizer - Black *Available through Order Zone*	In Catalog

Gator TH 6X4 Gas
Continued

CODE	ATTACHMENT IDENTIFIER	DESCRIPTION	SUGGESTED LIST PRICE USD ($)
		ATTACHMENTS FOR FIELD CONVERSION Continued...	
	LP19886	Gator Tool Box *Contact Dealer for pricing.*	In Catalog
	LP46485	Ratcheting Rhino Grip *Available through Order Zone.*	In Catalog
	LP45543	Refreshment Center *Available through Order Zone.*	In Catalog
	BM24804	Remote Cargo Box Release Kit *Required if equipped with Deluxe Glass Cab and manual cargo box release (no power lift).*	115.56
	LP25929	Rhino Grip XL - Double *Available through Order Zone.*	In Catalog
	LP25928	Rhino Grip XL - Single *Available through Order Zone.*	In Catalog
	LP19882	Saw Press Bracket *Available through Order Zone*	In Catalog
	BM22775	Side Tool Rack	304.96
		Carts / Hitches:	
	LPPCT10LXATV	10AT Cart *Available through Order Zone*	In Catalog
	LPPCT17ATJD	17AT Cart *Available through Order Zone.*	In Catalog
	LPUT21JD	21 Steel Utility Cart *Available through Order Zone*	In Catalog
	PM05101	Ball Mount - 1.875 in. (48mm)	See Parts
	PM05201	Ball Mount - 2 in. (51mm)	See Parts
	BM23989	Drawbar, 1.25 In. (38mm)	35.31
	BM17801	Rear Hitch	44.94
	BM23839	Rear Receiver Hitch, 1.25 in. (38mm) *No drawbar nor ball is included with the hitch.*	79.19
		Custom & High Performance:	
	BM20414	Heavy-Duty Suspension Kit *Recommended when using a deluxe cab or front mounted blades. Heavy-Duty Suspension is standard on Gator TE.*	165.86
	BM21982	High Capacity Alternator (TH 6X4 Gas Only)	447.26
	BM22543	Rough Terrain Kit *Throttle stabilizer.*	97.37
		Engine:	
	AM115838	Spark Arrester Screen	See Parts
		Hunting / Camo:	

Gator TH 6X4 Gas

Continued

CODE	ATTACHMENT IDENTIFIER	DESCRIPTION	SUGGESTED LIST PRICE USD ($)
		ATTACHMENTS FOR FIELD CONVERSION Continued...	
	LP19884	Cargo Box Gun Mount - Black *Double gun boot mount. Includes (2) Gun Boot 6.0 Transports*	In Catalog
	LP19879	Deluxe Cargo Box Cover- Camo	In Catalog
	LP19877	Gator Gear Organizer (Camo)	In Catalog
	LP93103	Vehicle Cover, Cab / ROPS - Camo	In Catalog
		Lights / Signals:	
	BM23013	Backup Alarm Kit	101.66
	BM22405	Beacon Light	381.99
	BM21649	Beacon Light Kit - Deluxe Cab *Requires Electrical Kit.*	371.29
	BM24591	Brake / Tail Light Kit	160.50
	BM22685	Deluxe Light Kit *Kit includes backup lights, four-way flashers, turn signals, brake lights, taillights, front position lights.*	395.90
	BM21651	Front Light Kit - Deluxe Cab *Requires Electrical Kit.*	293.19
	BM23193	Horn Kit	97.37
	BM21652	Rear Light Kit - Deluxe Cab *Requires Electrical Kit.*	217.21
		Protection:	
	BM22020	Drive Belt Splash Guard	62.06
	BM25000	Floor Mat	78.11
	BM23458	Front Bumper *Includes Front Receiver Hitch.*	191.53
	BM23459	Front Bumper/Brush Guard *Includes front receiver hitch.*	339.19
	BM23457	Front Fender Guard *Requires Front Bumper or Front Bumper/Brushguard*	142.31
	LP93547	Gator Cover *Not compatible with Deluxe Cab.* *Available through Order Zone.*	In Catalog
	BM22767	Heavy Duty Rear Bumper	236.47
	LP92634	Large Deluxe Seat Cover - Yellow *Available through Order Zone.*	In Catalog
	LP92334	Large Seat Cover - Yellow *Available through Order Zone.*	In Catalog

Gator TH 6X4 Gas

Continued

CODE	ATTACHMENT IDENTIFIER	DESCRIPTION	SUGGESTED LIST PRICE USD ($)
		ATTACHMENTS FOR FIELD CONVERSION Continued...	
	LP92333	Seat Cover - Camo *Available through Order Zone.*	In Catalog
	BM22773	Tail Light Protectors	89.89
	LP93107	Vehicle Cover, Cab / ROPS - Black *Fits all Models Equipped with OPS and Deluxe Cab Structure.*	In Catalog
		Seats / Wheels / Tires:	
	BM23799	Parts For Adjustable Driver's Seat	88.81
	TY24328	Tire Chains (Pair) for 24x12.00-12 In. Drive Tires *For Turf and Knobby Tires. Not Intended for use on all Four Rear Tires.*	See Parts
		Spanish North American Kit:	
	M153216	Spanish Operator's Manual	See Parts
		Sprayers / Pressure Washers:	
	LP33597	25 Gallon Bed Sprayer	In Catalog
	LP20852	45 Gallon Bed Sprayer	In Catalog
	LP22908	45 Gallon High Performance Sprayer	In Catalog
	LP20485	45 Gallon Tow-Behind Sprayer	In Catalog
	LP20853	90 Gallon Bed Sprayer	In Catalog
	LP22909	90 Gallon High Performance Bed Sprayer	In Catalog
	LPGP2700GH	GatorPal High Pressure Washer (2700 psi, Honda engine) *Contact Dealer for pricing.*	In Catalog
	LPGP2700GS	GatorPal High Pressure Washer (2700 psi, Subaru engine) *Contact Dealer for pricing.*	In Catalog
	LPGP3000GH	GatorPal High Pressure Washer (3000 psi, Honda engine) *Contact Dealer for pricing.*	In Catalog
	LPGP3000GS	GatorPal High Pressure Washer (3000 psi, Subaru engine) *Contact Dealer for pricing.*	In Catalog
	LP22885	HP 150 in. Precision Boom *Compatible with all High Performance Sprayers* *Available through Order Zone*	In Catalog
	LP39963	HP 45 Gallon Sprayer - Tow Behind	In Catalog
	LP22884	HP Boomless Nozzles	In Catalog
	LP22911	HP Standard Gator Boom	In Catalog

Gator TH 6X4 Gas
Continued

CODE	ATTACHMENT IDENTIFIER	DESCRIPTION	SUGGESTED LIST PRICE USD ($)
		ATTACHMENTS FOR FIELD CONVERSION Continued...	
		Winch:	
	BM24442	Warn® Winch (3000 Lb.) *Requires Front Bumper or Front Bumper/Brush Guard for Front Mount.* *Requires Rear Receiver Hitch for Rear Mount.* *Requires Rear Multi-Mount Harness (AM137110) for Rear Mount.* *VGA10459 (battery wiring harness) required for 6X4 vehicles (TH Gas, TH Diesel, M-Gator A1).*	879.54
	BM21392	Winch Accessories Kit	129.47
		SERVICE CONTRACTS - RESIDENTIAL OWNERS/USE	
		Visit http://www.JohnDeere.com/ServicePlans for more information on John Deere Service Contracts. May not be Available in Parts of the U.S., Not Available in Canada. Price may vary due to driving distance and/or time from machine to dealership location.	
		John Deere Extended Service Plan - 2-Year Option *Available for T-Series, HPX and XUV utility vehicles only.)* *2-year extended service plan. (1 year of extended service protection);* *2-years of warranty transportation.*	139.99
		John Deere Extended Service Plan - 3-Year Option *3-year extended service plan. (2 years of extended service protection);* *3-years of warranty transportation.*	249.99

Gator TH 6X4 Diesel

Equipment for Base Machine

ENGINE:
18.2 Engine HP (854cc)
3 Cylinder, Liquid Cooled Overhead Valves
Full Pressure Lubrication System with Replaceable Oil Filter
Replaceable Dual Element (Dry Type) Air Cleaner
5.0 Gallon (18.9L) Fuel Capacity
Spark Arresting Muffler (optional)
IDI Diesel Ignition
Dual Radiator System
ELECTRICAL:
Electric Start
40 Amp, Regulated Alternator
340 CCA Battery
Two 37.5 Watt Halogen Headlights
Automatic Glo-Plug System
TRANSAXLE/TRANSMISSION:
Continuously Variable Transmission (CVT)
Single-speed Transaxle
20 mph (32.2 kph) Maximum Forward Speed
Rear Traction Assist
Rear Internal Wet Disk Brakes
Wet Disk Hand-Operated Park Brake
1-3/8 In. (35 mm) Forged Rear Axles
Four Rear Drive Wheels
Heavy-Duty #60 Roller Chain
STEERING/FRONT SUSPENSION:
Rack and Pinion Steering
Independent Front Suspension
Spring-Over-Shock Single A-Arm Design
1 In. (25 mm) Front Spindles
FRAME/STYLED PARTS:
Arc Welded Uni-Body Frame
Thermoplastic Elastomer Polyolefin (TPO) Hood and Fenders
Front Bumper
OPERATOR STATION:
High-Back Bucket Seats
Walk-Through Platform
Park Brake Indicator Light
Traction Assist Indicator Light
Battery Charge Light
Coolant Temperature Light
Glo-Plug Activation Light
Oil Pressure Light
Hip Restraint Bars (Driver and Passenger)
Passenger Grab Handle
Glove Box
Two Cup Holders
Fuel Gauge
Hour Meter
12V DC Outlet
DIMENSIONS:
108 In. Long (with bumper) x 60 In. Wide x 43.6 In. High (2743 mm x 1524 mm x 1107 mm)
1600 Lbs. (635 kg.) Total Payload Capacity Which Includes:
200 Lbs. (91 kg) Driver,
200 Lbs. (91 kg) Passenger and 1200 Lbs (454 kg) in Cargo Box
Towing Capacity: 1400 Lbs. (635 kg)
12.4 ft. Turning Radius
Ground Clearance (Under Transaxle): 6.5 In. (165 mm)
Ground Clearance (Under Foot Platform): 8.5 In. (216 mm)
CARGO BOX:
45 In. Long x 52 In. Wide x 12 In. Deep (1143 mm x 1320 mm x 304.8 mm)
16.4 Cu Ft (.46 m) Capacity
1200 Lbs. (508 kg) Box Capacity
Tilting Box
Hinged (Bottom) Tailgate, Removable
Load Guard
Removable Cargo Box Side Panels (Flat Bed)
Hold Down Latch and Prop Rod
TIRES:
Front: 2-22.5x10.00-8 4 Ply Cayman KT (Knobby)
Rear: 4-25x12.00-9 4 Ply Cayman KT (Knobby)
SAFETY VIDEO TAPE:
Safety & Operational Video
*Engine HP is Provided by the Engine Manufacturer to be Used for Comparison Purposes Only, Actual Operating HP will be Less.

CODE	ATTACHMENT IDENTIFIER	DESCRIPTION	SUGGESTED LIST PRICE USD ($)

Select One Code From Each Required Category

BASE MACHINE

F.O.B. Janesville, Wisconsin

5625M	Gator TH 6X4 Diesel *Base Machine Suggested List Price Does Not Include $300 USD Destination Charge.*	12,099.00

DESTINATION

0202	US/Canada	In Base Price
0230	Australia/New Zealand	Same Price
0195	Mexico	Same Price

WHEELS WITH TIRES (SIX)

Gator TH 6X4 Diesel

Continued

CODE	ATTACHMENT IDENTIFIER	DESCRIPTION	SUGGESTED LIST PRICE USD ($)
		WHEELS WITH TIRES (SIX) Continued...	
1000		Cayman KT (Knobby) Tires	In Base Price
1001		Cayman Turf Tires	Same Price
1002		Cayman AT (All Terrain) Tires	338.00
		DRIVER SEAT	
2000		Non Adjustable Seat	In Base Price
2001		Adjustable Seat	83.00
		DELUXE CARGO BOX	
3000		Deluxe Cargo Box with Paint & Reflectors	In Base Price
3002		Deluxe Cargo Box with Reflectors & Spray-On Liner	264.00
3003		Deluxe Cargo Box with Brake & Tail Light, Spray-On Liner & Tail Light Protector	496.00
		CARGO BOX POWER LIFT	
4000		Cargo Box Power Lift	802.00
4010		Less Power Lift *Latch and Prop Rod Included.*	In Base Price
		FRONT PROTECTION PACKAGE	
5010		Less Front Protection Package	In Base Price
		REAR PROTECTION PACKAGE	
5100		Rear Protection Package Package Consists of: Rear Bumper and Bedmat Kit. *Package Priced at 10% Discount.*	321.00
5110		Less Rear Protection Package	In Base Price
		REAR RECEIVER HITCH	
6000		1.25 In. (38mm) Rear Receiver Hitch	74.00
6010		Less Rear Receiver Hitch	In Base Price
		ATTACHMENTS FOR FIELD CONVERSION	
		Cabs/Roofs/Windshields:	
	BM22600	Deluxe Glass Cab *Includes Front Windshield (Excluding Wiper), Glass Doors and Glass Rear Window.* *Remote Cargo Box Release Kit is required if vehicle is not equipped with Cargo Box Power Lift.* *Heavy Duty Front Suspension Kit is recommended with Cab installation.*	4,086.33

Gator TH 6X4 Diesel

Continued

CODE	ATTACHMENT IDENTIFIER	DESCRIPTION	SUGGESTED LIST PRICE USD ($)
		ATTACHMENTS FOR FIELD CONVERSION Continued...	
	BM22138	Electrical Kit *Kit Includes Wiring Harness, Overhead Console and Roof Headliner.*	219.36
	BM21645	Exterior Mirrors (2) Kit *Requires Deluxe Glass Cab.*	173.34
	BM22229	Heater Kit	1,086.06
	BM21656	Interior Light Kit - Deluxe Cab *Requires Electrical Kit.*	58.86
	BM21646	Visor (1) Kit - Deluxe cab	70.61
	BM21466	Windscreen	280.34
	BM21648	Windshield Washer Kit *Requires Electrical Kit.*	177.61
	BM21462	Windshield Wiper Kit *Requires Electrical Kit.*	303.89
		Cargo Box Options / Storage:	
	BM23849	5 Gallon Pail Holder	38.51
	BM22772	Cargo Box Bed Mat	119.84
	BM22769	Cargo Box Divider	191.53
	BM22811	Cargo Box FenderGuard *Requires Heavy Duty Rear Bumper*	191.53
	BM23759	Cargo Box Power Lift	779.00
	BM22774	Cargo Box Side Extension Kit	511.46
	LP19880	Deluxe Cargo Box Cover - Black *Available through Order Zone*	In Catalog
	BM23456	Front Hood Rack *Requires Front Bumper / Brush Guard for mounting. Not compatible with Mauser Cab.*	241.81
	LP30320	Fuel Pack *Available through Order Zone*	In Catalog
	LP19878	Gator Gear Organizer - Black *Available through Order Zone*	In Catalog
	LP19886	Gator Tool Box *Contact Dealer for pricing.*	In Catalog
	LP46485	Ratcheting Rhino Grip *Available through Order Zone.*	In Catalog
	LP45543	Refreshment Center *Available through Order Zone.*	In Catalog

Gator TH 6X4 Diesel

Continued

CODE	ATTACHMENT IDENTIFIER	DESCRIPTION	SUGGESTED LIST PRICE USD ($)
		ATTACHMENTS FOR FIELD CONVERSION Continued...	
	BM24804	Remote Cargo Box Release Kit *Required if equipped with Deluxe Glass Cab and manual cargo box release (no power lift).*	115.56
	LP25929	Rhino Grip XL - Double *Available through Order Zone.*	In Catalog
	LP25928	Rhino Grip XL - Single *Available through Order Zone.*	In Catalog
	LP19882	Saw Press Bracket *Available through Order Zone*	In Catalog
	BM22775	Side Tool Rack	304.96
		Carts / Hitches:	
	LPPCT10LXATV	10AT Cart *Available through Order Zone*	In Catalog
	LPPCT17ATJD	17AT Cart *Available through Order Zone.*	In Catalog
	LPUT21JD	21 Steel Utility Cart *Available through Order Zone*	In Catalog
	PM05101	Ball Mount - 1.875 in. (48mm)	See Parts
	PM05201	Ball Mount - 2 in. (51mm)	See Parts
	BM23989	Drawbar, 1.25 In. (38mm)	35.31
	BM17801	Rear Hitch	44.94
	BM23839	Rear Receiver Hitch, 1.25 in. (38mm) *No drawbar nor ball is included with the hitch.*	79.19
		Custom & High Performance:	
	BM22114	Auxiliary Battery Kit	58.19
	BM20414	Heavy-Duty Suspension Kit *Recommended when using a deluxe cab or front mounted blades. Heavy-Duty Suspension is standard on Gator TE.*	165.86
	BM22543	Rough Terrain Kit *Throttle stabilizer.*	97.37
		Engine:	
	AM882530	Adaptor Parts for Engine Coolant Heater	See Parts
	AR87167	Engine Coolant Heater (110 Volt) *Requires adapter parts for engine coolant heater. Requires AM134805 Engine Block Heater Adapter.*	See Parts
	AM115838	Spark Arrester Screen	See Parts
		Hunting / Camo:	
	LP19884	Cargo Box Gun Mount - Black *Double gun boot mount. Includes (2) Gun Boot 6.0 Transports*	In Catalog

Gator TH 6X4 Diesel

Continued

CODE	ATTACHMENT IDENTIFIER	DESCRIPTION	SUGGESTED LIST PRICE USD ($)
		ATTACHMENTS FOR FIELD CONVERSION Continued...	
	LP19879	Deluxe Cargo Box Cover- Camo	In Catalog
	LP19877	Gator Gear Organizer (Camo)	In Catalog
	LP93103	Vehicle Cover, Cab / ROPS - Camo	In Catalog
		Lights / Signals:	
	BM23013	Backup Alarm Kit	101.66
	BM22405	Beacon Light	381.99
	BM21649	Beacon Light Kit - Deluxe Cab *Requires Electrical Kit.*	371.29
	BM24591	Brake / Tail Light Kit	160.50
	BM22685	Deluxe Light Kit *Kit includes backup lights, four-way flashers, turn signals, brake lights, taillights, front position lights.*	395.90
	BM21651	Front Light Kit - Deluxe Cab *Requires Electrical Kit.*	293.19
	BM23193	Horn Kit	97.37
	BM21652	Rear Light Kit - Deluxe Cab *Requires Electrical Kit.*	217.21
		Protection:	
	BM22020	Drive Belt Splash Guard	62.06
	BM25000	Floor Mat	78.11
	BM23458	Front Bumper *Includes Front Receiver Hitch.*	191.53
	BM23459	Front Bumper/Brush Guard *Includes front receiver hitch.*	339.19
	BM23457	Front Fender Guard *Requires Front Bumper or Front Bumper/Brushguard*	142.31
	LP93547	Gator Cover *Not compatible with Deluxe Cab.* *Available through Order Zone.*	In Catalog
	BM22767	Heavy Duty Rear Bumper	236.47
	LP92634	Large Deluxe Seat Cover - Yellow *Available through Order Zone.*	In Catalog
	LP92334	Large Seat Cover - Yellow *Available through Order Zone.*	In Catalog
	LP92333	Seat Cover - Camo *Available through Order Zone.*	In Catalog

Gator TH 6X4 Diesel

Continued

CODE	ATTACHMENT IDENTIFIER	DESCRIPTION	SUGGESTED LIST PRICE USD ($)
		ATTACHMENTS FOR FIELD CONVERSION Continued...	
	BM22773	Tail Light Protectors	89.89
	LP93107	Vehicle Cover, Cab / ROPS - Black *Fits all Models Equipped with OPS and Deluxe Cab Structure.*	In Catalog
		Seats / Wheels / Tires:	
	BM23799	Parts For Adjustable Driver's Seat	88.81
	TY24328	Tire Chains (Pair) for 24x12.00-12 In. Drive Tires *For Turf and Knobby Tires. Not Intended for use on all Four Rear Tires.*	See Parts
		Spanish North American Kit:	
	M153216	Spanish Operator's Manual	See Parts
		Sprayers / Pressure Washers:	
	LP33597	25 Gallon Bed Sprayer	In Catalog
	LP20852	45 Gallon Bed Sprayer	In Catalog
	LP22908	45 Gallon High Performance Sprayer	In Catalog
	LP20485	45 Gallon Tow-Behind Sprayer	In Catalog
	LP20853	90 Gallon Bed Sprayer	In Catalog
	LP22909	90 Gallon High Performance Bed Sprayer	In Catalog
	LPGP2700GH	GatorPal High Pressure Washer (2700 psi, Honda engine) *Contact Dealer for pricing.*	In Catalog
	LPGP2700GS	GatorPal High Pressure Washer (2700 psi, Subaru engine) *Contact Dealer for pricing.*	In Catalog
	LPGP3000GH	GatorPal High Pressure Washer (3000 psi, Honda engine) *Contact Dealer for pricing.*	In Catalog
	LPGP3000GS	GatorPal High Pressure Washer (3000 psi, Subaru engine) *Contact Dealer for pricing.*	In Catalog
	LP22885	HP 150 in. Precision Boom *Compatible with all High Performance Sprayers* *Available through Order Zone*	In Catalog
	LP39963	HP 45 Gallon Sprayer - Tow Behind	In Catalog
	LP22884	HP Boomless Nozzles	In Catalog
	LP22911	HP Standard Gator Boom	In Catalog
		Winch:	
	BM24442	Warn® Winch (3000 Lb.) *Requires Front Bumper or Front Bumper/Brush Guard for Front Mount.* *Requires Rear Receiver Hitch for Rear Mount.* *Requires Rear Multi-Mount Harness (AM137110) for Rear Mount.* *VGA10459 (battery wiring harness) required for 6X4 vehicles (TH Gas, TH Diesel, M-Gator A1).*	879.54

Gator TH 6X4 Diesel

Continued

CODE	ATTACHMENT IDENTIFIER	DESCRIPTION	SUGGESTED LIST PRICE USD ($)
		ATTACHMENTS FOR FIELD CONVERSION Continued...	
	BM21392	Winch Accessories Kit	129.47
		SERVICE CONTRACTS - RESIDENTIAL OWNERS/USE	
		Visit http://www.JohnDeere.com/ServicePlans for more information on John Deere Service Contracts. May not be Available in Parts of the U.S., Not Available in Canada. Price may vary due to driving distance and/or time from machine to dealership location.	
		John Deere Extended Service Plan - 2-Year Option *Available for T-Series, HPX and XUV utility vehicles only.)* *2-year extended service plan. (1 year of extended service protection);* *2-years of warranty transportation.*	139.99
		John Deere Extended Service Plan - 3-Year Option *3-year extended service plan. (2 years of extended service protection);* *3-years of warranty transportation.*	249.99

Gator TE Electric (145 Amp) Utility Vehicle

Equipment for Base Machine

DRIVE SYSTEM:
3.8 HP Separately Excited Motor
21 Amp DC Automatic Charger
Separately Excited Controller
400 Amp Current Limit
Dana Transaxle w/Helical
Gearing Seperate Line 48V
System With 8 Trojan T-145
Batteries
Full Enclosed, Oil Bath
Transaxle Lubrication
Self Adjusting Drum Brakes
Hand Operated Multi Latch
Park Brake
2 Rear Drive Wheels
15 MPH (24.1 Km/h) Forward/
9 MPH Reverse
STEERING/FRONT SUSPENSION:
Rack and Pinion Steering
Independent Front Suspension:
Spring Over Shock,
Independent A-Arm Design
1 In (25 mm) Front
Spindles
FRAME/FENDERS:
Arc Welded Uni-Body Frame
Thermoplastic Elastomer
Polyolefin (TPO) Hood and
Fenders
OPERATOR STATION:
Dash Instrumentation Includes:
Battery Level Indicator,
Hourmeter
Foward / Neutral / Reverse
Switch
Two High Back Seats
Hip Restraint Bars
(Operator and Passenger)
Walk Through Platform
Passenger Handle Bar
Glove Box
CARGO BOX:
52 In. (1320 mm) Wide X
45 In. (1143 mm) Long X
12 In. (304.8 mm) Deep
500 Lb. (227 kg) Cargo
Capacity (16.4 cu. ft.)
900 Lb. (409 kg) Total
Payload Capacity (With
200 Lb. (91 kg) Operator
and 200 Lb. (91 kg)
Passenger)
600 Lb. (273 kg) Towing
Capacity
Ribbed Steel Construction
Tilting Box
Hinged, Removable Tailgate
Load Guard
Removeable Cargo Box Side
Panels (Flat Bed)
Hold Down Latch and
Prop Rod
TIRES:
Front: 2-22x9.50-10 4 Ply
Turf/Hard Surface
Rear: 2-24x12-10 4 Ply
Cayman Turf

CODE	ATTACHMENT IDENTIFIER	DESCRIPTION	SUGGESTED LIST PRICE USD ($)

Select One Code From Each Required Category

BASE MACHINE

F.O.B. Janesville, Wisconsin

563GM	Gator TE Electric (145 Amp) Utility Vehicle *Base Machine Suggested List Price Does Not Include $300 USD Destination Charge.*	10,899.00

DESTINATION

0202	US/Canada	In Base Price
0195	Mexico	Same Price

WHEELS WITH TIRES (FOUR)

1001	Cayman Turf Tires	In Base Price

DRIVER SEAT

2000	Non Adjustable Seat	In Base Price
2001	Adjustable Seat	83.00

DELUXE CARGO BOX

3000	Deluxe Cargo Box with Paint & Reflectors	In Base Price
3002	Deluxe Cargo Box with Reflectors & Spray-On Liner	264.00

Gator TE Electric (145 Amp) Utility Vehicle
Continued

CODE	ATTACHMENT IDENTIFIER	DESCRIPTION	SUGGESTED LIST PRICE USD ($)
		DELUXE CARGO BOX Continued...	
3003		Deluxe Cargo Box with Brake & Tail Light, Spray-On Liner & Tail Light Protector *Must order 3100 option code when ordering 3003 option code.*	496.00
		CONVERTER	
3100		48V to 12V Converter	586.00
3101		Less Converter	In Base Price
		CARGO BOX POWER LIFT	
4000		Cargo Box Power Lift *Must order 3100 option code when ordering 4000 option code.*	720.00
4010		Less Power Lift *Latch and Prop Rod Included.*	In Base Price
		FRONT PROTECTION PACKAGE	
5000		Front Protection Package Package Consists of: Front Bumper / Brush Guard, Front Fender Guard and Rubber Floormats. *Package Priced at 10% Discount.*	504.00
5010		Less Front Protection Package	In Base Price
		REAR PROTECTION PACKAGE	
5100		Rear Protection Package Package Consists of: Rear Bumper, Bedmat Kit, Cargo Box FenderGuard. *Package Priced at 10% Discount.*	494.00
5110		Less Rear Protection Package	In Base Price
		REAR RECEIVER HITCH	
6000		1.25 In. (38mm) Rear Receiver Hitch	74.00
6010		Less Rear Receiver Hitch	In Base Price
		ATTACHMENTS FOR FIELD CONVERSION	
		Cabs/Roofs/Windshields:	
	BM22600	Deluxe Glass Cab *Includes Front Windshield (Excluding Wiper), Glass Doors and Glass Rear Window.* *Remote Cargo Box Release Kit is required if vehicle is not equipped with Cargo Box Power Lift.* *Heavy Duty Front Suspension Kit is recommended with Cab installation.*	4,086.33
	BM22138	Electrical Kit *Kit Includes Wiring Harness, Overhead Console and Roof Headliner.*	219.36

Gator TE Electric (145 Amp) Utility Vehicle

Continued

CODE	ATTACHMENT IDENTIFIER	DESCRIPTION	SUGGESTED LIST PRICE USD ($)
		ATTACHMENTS FOR FIELD CONVERSION Continued...	
	BM21645	Exterior Mirrors (2) Kit *Requires Deluxe Glass Cab.*	173.34
	BM21656	Interior Light Kit - Deluxe Cab *Requires Electrical Kit if equipped with 48V to 12V converter.*	58.86
	BM21646	Visor (1) Kit - Deluxe cab	70.61
	BM21466	Windscreen	280.34
	BM21648	Windshield Washer Kit *Requires Electrical Kit. If equipped with 48V to 12V converter.*	177.61
	BM21462	Windshield Wiper Kit *Requires Electrical Kit if equipped with 48V to 12V converter.*	303.89
		Cargo Box Options / Storage:	
	BM23849	5 Gallon Pail Holder	38.51
	BM22772	Cargo Box Bed Mat	119.84
	BM22769	Cargo Box Divider	191.53
	BM22811	Cargo Box FenderGuard *Requires Heavy Duty Rear Bumper*	191.53
	BM23734	Cargo Box Power Lift *If equipped with 48V to 12V converter.*	770.40
	BM22873	Cargo Box Power Lift - 48V *If not equipped with 48V to 12V converter.*	770.40
	BM22774	Cargo Box Side Extension Kit	511.46
	LP19880	Deluxe Cargo Box Cover - Black *Available through Order Zone*	In Catalog
	BM23456	Front Hood Rack *Requires Front Bumper / Brush Guard for mounting. Not compatible with Mauser Cab.*	241.81
	LP19878	Gator Gear Organizer - Black *Available through Order Zone*	In Catalog
	LP19886	Gator Tool Box *Contact Dealer for pricing.*	In Catalog
	LP46485	Ratcheting Rhino Grip *Available through Order Zone.*	In Catalog
	LP45543	Refreshment Center *Available through Order Zone.*	In Catalog
	BM24804	Remote Cargo Box Release Kit *Required if equipped with Deluxe Glass Cab and manual cargo box release (no power lift).*	115.56
	LP25929	Rhino Grip XL - Double *Available through Order Zone.*	In Catalog

Gator TE Electric (145 Amp) Utility Vehicle

Continued

CODE	ATTACHMENT IDENTIFIER	DESCRIPTION	SUGGESTED LIST PRICE USD ($)
		ATTACHMENTS FOR FIELD CONVERSION Continued...	
	LP25928	Rhino Grip XL - Single *Available through Order Zone.*	In Catalog
	LP19882	Saw Press Bracket *Available through Order Zone*	In Catalog
	BM22776	Side Storage Box	215.07
	BM22775	Side Tool Rack	304.96
		Carts / Hitches:	
	LPPCT10LXATV	10AT Cart *Available through Order Zone*	In Catalog
	PM05101	Ball Mount - 1.875 in. (48mm)	See Parts
	PM05201	Ball Mount - 2 in. (51mm)	See Parts
	BM23989	Drawbar, 1.25 In. (38mm)	35.31
	BM17801	Rear Hitch	44.94
	BM23839	Rear Receiver Hitch, 1.25 in. (38mm) *No drawbar nor ball is included with the hitch.*	79.19
		Hunting / Camo:	
	LP19884	Cargo Box Gun Mount - Black *Double gun boot mount. Includes (2) Gun Boot 6.0 Transports*	In Catalog
	LP19879	Deluxe Cargo Box Cover- Camo	In Catalog
	LP19877	Gator Gear Organizer (Camo)	In Catalog
	LP93103	Vehicle Cover, Cab / ROPS - Camo	In Catalog
		Lights / Signals:	
	BM22405	Beacon Light	381.99
	BM21649	Beacon Light Kit - Deluxe Cab *Requires Electrical Kit. If equipped with 48V to 12V converter.*	371.29
	BM24591	Brake / Tail Light Kit *If equipped with 48V to 12V converter.*	160.50
	BM22685	Deluxe Light Kit *Kit includes backup lights, four-way flashers, turn signals, brake lights, taillights, front position lights. If equipped with 48V to 12V converter.*	395.90
	BM21651	Front Light Kit - Deluxe Cab *Requires Electrical Kit if equipped with 48V to 12V converter.*	293.19
	BM23193	Horn Kit *If equipped with 48V to 12V converter.*	97.37
	BM19809	Horn Kit - 48V *If not equipped with 48V to 12V converter.*	97.37

Gator TE Electric (145 Amp) Utility Vehicle
Continued

CODE	ATTACHMENT IDENTIFIER	DESCRIPTION	SUGGESTED LIST PRICE USD ($)
		ATTACHMENTS FOR FIELD CONVERSION Continued...	
	BM21652	Rear Light Kit - Deluxe Cab *Requires Electrical Kit if equipped with 48V to 12V converter.*	217.21
		Protection:	
	BM25000	Floor Mat	78.11
	BM23458	Front Bumper *Includes Front Receiver Hitch.*	191.53
	BM23459	Front Bumper/Brush Guard *Includes front receiver hitch.*	339.19
	BM23457	Front Fender Guard *Requires Front Bumper or Front Bumper/Brushguard*	142.31
	LP93547	Gator Cover *Not compatible with Deluxe Cab.* *Available through Order Zone.*	In Catalog
	BM22767	Heavy Duty Rear Bumper	236.47
	LP92634	Large Deluxe Seat Cover - Yellow *Available through Order Zone.*	In Catalog
	LP92334	Large Seat Cover - Yellow *Available through Order Zone.*	In Catalog
	LP92333	Seat Cover - Camo *Available through Order Zone.*	In Catalog
	BM22773	Tail Light Protectors	89.89
	LP93107	Vehicle Cover, Cab / ROPS - Black *Fits all Models Equipped with OPS and Deluxe Cab Structure.*	In Catalog
		Seats / Wheels / Tires:	
	BM23799	Parts For Adjustable Driver's Seat	88.81
		Sprayers / Pressure Washers:	
	LP33597	25 Gallon Bed Sprayer *If equipped with 48V to 12V converter*	In Catalog
	LP20852	45 Gallon Bed Sprayer *If equipped with 48V to 12V converter*	In Catalog
	LP22908	45 Gallon High Performance Sprayer *If equipped with 48V to 12V converter*	In Catalog
	LP20485	45 Gallon Tow-Behind Sprayer *If equipped with 48V to 12V converter*	In Catalog
	LP22885	HP 150 in. Precision Boom *Compatible with all High Performance Sprayers* *Available through Order Zone*	In Catalog
	LP39963	HP 45 Gallon Sprayer - Tow Behind *If equipped with 48V to 12V converter.* *Available through Order Zone.*	In Catalog

Gator TE Electric (145 Amp) Utility Vehicle
Continued

CODE	ATTACHMENT IDENTIFIER	DESCRIPTION	SUGGESTED LIST PRICE USD ($)
		ATTACHMENTS FOR FIELD CONVERSION Continued...	
	LP22884	HP Boomless Nozzles	In Catalog
	LP22911	HP Standard Gator Boom	In Catalog

Standard-Duty 72 In. Front Blade
(For Gator Utility Vehicles, Crossover UV's and M-Gators)

Equipment for Base Machine

72-Inch Wide Straight Blade
Three-Position Manual Angling
Quick Installation for Both Frame and Hydraulic Lift
Two Adjustable Skid Shoes
Trip Protection
Replaceable Cutting Edge
Less Implement Lift Frame and Lift

CODE	ATTACHMENT IDENTIFIER	DESCRIPTION	SUGGESTED LIST PRICE USD ($)

Select One Code From Each Required Category

BASE MACHINE

8014M	Standard-Duty 72 In. Front Blade (For Gator Utility Vehicles, Crossover UV's and M-Gators)	633.00

LIFT FRAME KITS

1000	Implement Lift Frame Kit *For use on XUV 625i, 825i, 855D and A2 & A3 Utility Vehicles Only.*	514.00
1001	Implement Lift Frame Kit *For Use on TS, TX, TX TURF, TH, and M-Gator A1 Utility Vehicles.*	442.00
1003	Implement Lift Frame Kit *For use on XUV 620i, 850D and HPX Utility Vehicles.*	514.00
1010	Less Implement Lift Frame Kit	In Base Price

POWER / HYDRAULIC LIFT KITS

2000	Hydraulic Implement Lift Kit *For use on XUV 620i, 850D and HPX Utility Vehicles. Includes Adapter Kit for hydraulic implement lift.*	896.00
2001	Power Implement Lift Kit *For Use on TS, TX, TX TURF, TH, and M-Gator A1 Utility Vehicles.*	730.00
2002	Hydraulic Implement Lift Kit *For Use on XUV 625i, 825i, 855D and A2 & A3 Utility Vehicles Only.*	823.00
2010	Less Implement Lift Kit	In Base Price

ATTACHMENTS - ORDER AS DESIRED

European CE Kit:

9100	European CE Conversion Kit for 72 In. Front Blade *This Code Must be Ordered to Receive a 72 In. Front Blade Which Meets CE Mark Requirements. Kit Includes Pictorial Decals and Operator's Manuals in English, French, Italian, German and Spanish.*	No Charge

ATTACHMENTS FOR FIELD CONVERSION

Blades:

Standard-Duty 72 In. Front Blade
(For Gator Utility Vehicles, Crossover UV's and M-Gators)

Continued

CODE	ATTACHMENT IDENTIFIER	DESCRIPTION	SUGGESTED LIST PRICE USD ($)
		ATTACHMENTS FOR FIELD CONVERSION Continued...	
	BM23029	Plow Markers	38.51
		Custom & High Performance:	
	VGB10544	Heavy Duty Front Suspension *For Use On HPX, 620 and 850 XUV Utility Vehicles Only.* *Recommended for Crossover Vehicles equipped with* *Front Blade or Cab.*	249.31
		Miscellaneous:	
	BM24354	Adapter Kit for Hydraulic Implement Lift *For use on XUV 620i, 850D and HPX Utility Vehicles.*	78.11
	BM22606	Hydraulic Implement Lift Kit *For use on HPX, XUV 620i, 625i, 825i, 850D, 855D and Military A2 & A3 Utility Vehicles.*	880.61
	VGB10086	Implement Lift Frame Kit *For Use on TS, TX, TX TURF, TH, TE and M-Gator A1 Utility Vehicles.*	472.94
	BM23081	Implement Lift Frame Kit *For use on XUV 625i, 825i, 855D and A2 Utility Vehicles Only.*	549.99
	BM24344	Implement Lift Frame Kit *For use on XUV 620i, 850D and HPX Utility Vehicles.*	549.99
	BM21459	Power Implement Lift Kit *For use on TS, TX, TX TURF, TH and Military A1 Utility Vehicles.*	781.10
	TY15650	Rear Tire Chains, 25x11-12 (pair)	See Parts
	TY25802	Tire Chains (for HPAT 24x9.5-10)	See Parts
	TY25326	Tire Chains for 26x10.50-12 Turf Drive Tires *For all Wheel Steer Tractors.*	See Parts
		Seats / Wheels / Tires:	
	TY24328	Tire Chains (Pair) for 24x12.00-12 In. Drive Tires *For Turf and Knobby Tires. Not Intended for use on all Four Rear Tires.*	See Parts
	TY15958	Tire Chains (Pair) for 26x12-12 Tires	See Parts
	TY25800	Tire Chains (for HPAP 24x10.5-10 or HPAT 24x12-10)	See Parts
	TY25814	Tire Chains (for Turf/Hard Surface 24x12.00-10)	See Parts

Standard-Duty 72 In. V-Blade
(For Gator Utility Vehicles, Crossover UV's and M-Gators)

Equipment for Base Machine

72-Inch Wide Adjustable V-Blade
Converts from V-Position to an Inverted Scoop to a Straight Blade
Quick Installation for Both Frame and Hydraulic Lift
Two Adjustable Skid Shoes
Trip Protection
Replaceable Cutting Edge
Less Implement Lift Frame and Lift

CODE	ATTACHMENT IDENTIFIER	DESCRIPTION	SUGGESTED LIST PRICE USD ($)
		Select One Code From Each Required Category	
		BASE MACHINE	
8015M		Standard-Duty 72 In. V-Blade (For Gator Utility Vehicles, Crossover UV's and M-Gators)	789.00
		LIFT FRAME KITS	
1000		Implement Lift Frame Kit *For use on XUV 625i, 825i, 855D and A2 & A3 Utility Vehicles Only.*	514.00
1001		Implement Lift Frame Kit *For Use on TS, TX, TX TURF, TH, and M-Gator A1 Utility Vehicles.*	442.00
1003		Implement Lift Frame Kit *For use on XUV 620i, 850D and HPX Utility Vehicles.*	514.00
1010		Less Implement Lift Frame Kit	In Base Price
		POWER / HYDRAULIC LIFT KITS	
2000		Hydraulic Implement Lift Kit *For use on XUV 620i, 850D and HPX Utility Vehicles. Includes Adapter Kit for hydraulic implement lift.*	896.00
2001		Power Implement Lift Kit *For Use on TS, TX, TX TURF, TH, and M-Gator A1 Utility Vehicles.*	730.00
2002		Hydraulic Implement Lift Kit *For Use on XUV 625i, 825i, 855D and A2 & A3 Utility Vehicles Only.*	823.00
2010		Less Implement Lift Kit	In Base Price
		ATTACHMENTS - ORDER AS DESIRED	
		European CE Kit:	
9100		European CE Conversion Kit for 72 In. V-Blade *This Code Must be Ordered to Receive a 72 In. V-Blade Which Meets CE Mark Requirements. Kit Includes Pictorial Decals and Operator's Manuals in English, French, Italian, German and Spanish.*	No Charge
		ATTACHMENTS FOR FIELD CONVERSION	

Standard-Duty 72 In. V-Blade
(For Gator Utility Vehicles, Crossover UV's and M-Gators)

Continued

CODE	ATTACHMENT IDENTIFIER	DESCRIPTION	SUGGESTED LIST PRICE USD ($)
		ATTACHMENTS FOR FIELD CONVERSION Continued...	
		Blades:	
	BM23029	Plow Markers	38.51
		Custom & High Performance:	
	VGB10544	Heavy Duty Front Suspension *For Use On HPX, 620 and 850 XUV Utility Vehicles Only.* *Recommended for Crossover Vehicles equipped with* *Front Blade or Cab.*	249.31
		Miscellaneous:	
	BM24354	Adapter Kit for Hydraulic Implement Lift *For use on XUV 620i, 850D and HPX Utility Vehicles.*	78.11
	BM22606	Hydraulic Implement Lift Kit *For use on HPX, XUV 620i, 625i, 825i, 850D, 855D and Military A2 & A3 Utility Vehicles.*	880.61
	VGB10086	Implement Lift Frame Kit *For Use on TS, TX, TX TURF, TH, TE and M-Gator A1 Utility Vehicles.*	472.94
	BM23081	Implement Lift Frame Kit *For use on XUV 625i, 825i, 855D and A2 Utility Vehicles Only.*	549.99
	BM24344	Implement Lift Frame Kit *For use on XUV 620i, 850D and HPX Utility Vehicles.*	549.99
	BM21459	Power Implement Lift Kit *For use on TS, TX, TX TURF, TH and Military A1 Utility Vehicles.*	781.10
	TY15650	Rear Tire Chains, 25x11-12 (pair)	See Parts
	TY25802	Tire Chains (for HPAT 24x9.5-10)	See Parts
	TY25326	Tire Chains for 26x10.50-12 Turf Drive Tires *For all Wheel Steer Tractors.*	See Parts
		Seats / Wheels / Tires:	
	TY24328	Tire Chains (Pair) for 24x12.00-12 In. Drive Tires *For Turf and Knobby Tires. Not Intended for use on all Four Rear Tires.*	See Parts
	TY15958	Tire Chains (Pair) for 26x12-12 Tires	See Parts
	TY25800	Tire Chains (for HPAP 24x10.5-10 or HPAT 24x12-10)	See Parts
	TY25814	Tire Chains (for Turf/Hard Surface 24x12.00-10)	See Parts

SERVICE CONTRACTS - RESIDENTIAL OWNERS/USE

Visit http://www.JohnDeere.com/ServicePlans for more information on John Deere Service Contracts. May not be Available in Parts of the U.S., Not Available in Canada. Price may vary due to driving distance and/or time from machine to dealership location.

	John Deere Extended Service Plan - 2-Year Option *Available for T-Series, HPX and XUV utility vehicles only.)* *2-year extended service plan. (1 year of extended service protection);* *2-years of warranty transportation.*	399.99

Standard-Duty 72 In. V-Blade
(For Gator Utility Vehicles, Crossover UV's and M-Gators)

Continued

CODE	ATTACHMENT IDENTIFIER	DESCRIPTION	SUGGESTED LIST PRICE USD ($)
		SERVICE CONTRACTS - RESIDENTIAL OWNERS/USE Continued...	
		John Deere Extended Service Plan - 3-Year Option *3-year extended service plan. (2 years of extended service protection);* *3-years of warranty transportation.*	569.99

HPX Gas Green & Yellow

Equipment for Base Machine

21 Engine HP (617cc), 32 ft-lb (4.4 kg-m @ 2500 rpm)*
Two-cylinder, Liquid-cooled, 4-Cycle Gasoline
Overhead Valves
Full Pressure Lubrication System
Replaceable Single Dry-Type Element Air Cleaner with Remote Intake
5.3 Gallon (20.1L) Fuel Capacity
Solid-state Ignition
Spark-arresting Muffler
ELECTRICAL:
Electric Start
21 Amp, Regulated, 3-Phase Alternator
340 CCA Battery
Two 37.5 Watt Halogen Headlights
TRANSAXLE/TRANSMISSION:
Continuously Variable Transmission
Two-speed Transaxle
Operator Selectable 4WD
25 mph (40 kph) Maximum Forward Speed
Traction Assist
Front and Rear Hydraulic Disk Brakes
Hand-operated Sealed Wet Disk Park brake
1.3 In. (33mm) Forged Rear Axles
STEERING/SUSPENSION:
Rack and Pinion Steering
McPherson Strut, Single A-arm Front Suspension with 5.15 in (131 mm) Coil-over-shock Rear Suspension with 3.50 In. (90mm) Travel
11 ft. Turning Radius
Ground Clearance: 6 In. (153 mm)
Ground Clearance (Under Foot Platform): 13 In (330 mm)
FRAME/STYLED PARTS:
Hydroform Technology Frame
PC/ASA (JDLOY) Hood and Fenders
OCCUPANT PROTECTION SYSTEM(OPS):
1.75 In. (43.8 mm) Steel Tubular Overhead Structure
3-pt. Seat Belts
SAE J2194 ROPS Certified
Multiple Passenger Handholds
OPERATOR STATION:
High-back Bucket Seats
7 In. (178 mm) Slide Rail Adjustment on Driver's Seat
Hip Restraint Bars for Driver and Passenger
Passenger Grab Handles
Glove Box
Storage Compartment Under Hood
Two Cup Holders
Fuel Gauge
Hour Meter
12v DC Outlet
FRONTAL PROTECTION:
Heavy-Duty Front Bumper
DIMENSIONS(WITH OPS):
112.5 In. Long x 59.5 In. Wide x 74.8 In. High (2.9x1.5x1.9 m)
PAYLOAD:
1,400 Lb (635 kg) Total Payload Capacity which Includes:
200 Lb (91 kg) Driver, 200 Lb (91 kg) Passenger, and 1000 Lb (454 kg) in Cargo Box
Towing Capacity: 1,300 Lb (590 kg)
CARGO BOX:
43.9 In. Long x 49 In. Wide x 9 In. Deep (1,116x1,244x229mm)
11.3 cu. ft (.32 cu. m) Capacity
900 Lbs (409 kg) Box Capacity
Tilting Box
Hinged (bottom) Tailgate
Load Guard
Hold Down Latch and Prop Rod
TIRES:
Front: 24x9.5-10 4-Ply HPAP
Rear: 24x10.5-10 4-Ply HPAP
Less Deluxe Property Care Package
Less OPS Rear Screen
SAFETY AND OPERATIONAL
Safety and Operational DVD
Operators Manual
*Engine HP is Provided by the Engine Manufacturer to be Used for Comparison Purposes Only, Actual Operating HP will be Less.

CODE	ATTACHMENT IDENTIFIER	DESCRIPTION	SUGGESTED LIST PRICE USD ($)

Select One Code From Each Required Category

BASE MACHINE

F.O.B. Janesville, Wisconsin

9867M	HPX Gas Green & Yellow *Base Machine Suggested List Price Does Not Include $400 USD Destination Charge.*	9,299.00

DESTINATION

0202	US/CANADA	In Base Price
0230	AUSTRALIA/NEW ZEALAND	Same Price
0195	MEXICO	Same Price
0179	EUROPE	Same Price

HPX Gas Green & Yellow
Continued

CODE	ATTACHMENT IDENTIFIER	DESCRIPTION	SUGGESTED LIST PRICE USD ($)
		DESTINATION Continued...	
0250		ALL OTHER COUNTRIES	Same Price
		TIRES AND WHEELS	
1000		High-Performance All-Purpose (HPAP) Tires	In Base Price
1001		HPAT-Agressive Tread - Tires	203.00
1002		Turf Tires - Yellow	143.00
		SEATS	
2000		18 In. Bucket Seat - Yellow	In Base Price
2001		Bench Seat Yellow	Same Price
		OVERHEAD PROTECTION STRUCTURES (OPS)	
4000		OPS	In Base Price
4002		Deluxe Cab Frame/Including Glass Windshield with Wiper, Electrical Kit and Rear Window *Must order 5001 option when ordering 4002*	2,368.00
		POWER LIFT	
5001		Cargo Box Power Lift	929.00
5002		Manual Lift	In Base Price
		Attachments-Order as Desired	
		Spanish North American Kit:	
9435		Spanish North American Operato's Manual and Decal Kit	No Charge
		ATTACHMENTS FOR FIELD CONVERSION	
		Blades:	
	LPFBPPTJD1	Heavy Duty POWERtach Blade, 72" *Available through Order Zone*	In Catalog
	LPPK140	POWERtach Deflector Shield *Available through Order Zone*	In Catalog
	LPPK120	POWERtach Markers *Available through Order Zone*	In Catalog
	LPPWBK72	POWERtach Poly Wear Bar *Available through Order Zone*	In Catalog
	LPPK150	POWERtach Rubber Squeegee *Available through Order Zone*	In Catalog
	LPPK160	POWERtach Skid Shoes *Available through Order Zone*	In Catalog
		Cabs/Roofs/Windshields:	

HPX Gas Green & Yellow
Continued

CODE	ATTACHMENT IDENTIFIER	DESCRIPTION	SUGGESTED LIST PRICE USD ($)
		ATTACHMENTS FOR FIELD CONVERSION Continued...	
	BM23768	Air Cleaner Relocation Kit (Gas) *Quiet Cab Kit for Deluxe Cab. Requires Noise Reduction Kit for maximum performance. Can also be used with Poly Cab for noise reduction.*	11.77
	BM23608	Cab Heater *Requires Cab Heater Fitting Kit.*	1,130.99
	VGB10547	Cab Heater Fitting Kit	142.31
	BM23498	Deluxe Cab Frame *Requires Seat Belt Kit, Glass Door Kit, Glass Windshield with Wiper, and Rear Window Kit to complete full Deluxe Cab. Requires Remote Cargo Box Release kit if not equipped with cargo box power lift.*	1,443.43
	VGB10505	Electrical Kit *Required for field installed Deluxe cabs.*	94.16
	BM24560	Glass Door Kit - Deluxe Cab	2,427.83
	BM23507	Glass Windshield with Wiper - Deluxe Cab	874.19
	BM21656	Interior Light Kit - Deluxe Cab *Requires Electrical Kit.*	58.86
	BM23750	Noise Reduction Kit (Gas & Diesel) *Quiet Cab Kit for Deluxe Cab. Requires Air Cleaner Relocation Kit for maximum performance.*	373.43
	BM23742	OPS Full No-Scratch Windshield *Not compatible with Deluxe Cab Frame.*	531.79
	BM23741	OPS Full Poly Windshield *Not compatible with Deluxe Cab Frame.*	423.71
	BM23743	OPS Glass Windshield with Wiper *Not compatible with Deluxe Cab Frame.*	874.19
	BM23740	OPS Half Poly Windshield *Not compatible with Deluxe Cab Frame.*	339.19
	BM24115	OPS Poly Roof - Black	445.11
	BM24561	OPS Rear Panel	502.90
	LP10314	OPS Side Mirror - Left *Available through Order Zone.*	In Catalog
	LP10315	OPS Side Mirror - Right *Available through Order Zone.*	In Catalog
	LP93127	OPS Soft Roof - Black *Available through Order Zone*	In Catalog
	LP93123	OPS Soft Roof - Camo *Available through Order Zone*	In Catalog
	BM23505	Rear Window Kit - Deluxe Cab	225.77

HPX Gas Green & Yellow
Continued

CODE	ATTACHMENT IDENTIFIER	DESCRIPTION	SUGGESTED LIST PRICE USD ($)
		ATTACHMENTS FOR FIELD CONVERSION Continued...	
	BM23755	Seat Belt Kit *Required with Deluxe Cab Frame*	144.46
	BM23508	Side Mirrors - Deluxe Cab	129.47
	BM21646	Visor (1) Kit - Deluxe cab	70.61
	BM23534	Windshield Washer Fluid Kit - Deluxe Cab *Requires Electrical Kit.*	173.34
		Cargo Box Options / Storage:	
	VGB10133	Cargo Box Bed Mat	113.41
	BM23993	Cargo Box Power Lift	994.03
	BM22572	Cargo Box Side Extension Kit	511.46
	BM22777	Front Hood Rack *Requires Front Brush Guard.*	241.81
	LPMB4611GB	Gator Tool Box *Contact Dealer for pricing.*	In Catalog
	LP93117	OPS Overhead Organizer - Black *Available through Order Zone*	In Catalog
	LP93113	OPS Overhead Organizer - Camo *Available through Order Zone*	In Catalog
	VGB10507	Remote Cargo Box Release Kit *Required if equipped with Deluxe Glass Cab and manual cargo box release.*	102.71
	BM22776	Side Storage Box	215.07
	LP93207	Soft Rear Screen and Organizer - Black *Available through Order Zone*	In Catalog
		Carts / Hitches:	
	BM19972	1.25 In. (38 mm) Front Receiver Hitch *Attaches to front bumper*	62.06
	VGB10038	1.25 In. (38 mm) Rear Receiver Hitch	113.41
	LPPCT10LXATV	10AT Cart *Available through Order Zone*	In Catalog
	LPPCT17ATJD	17AT Cart *Available through Order Zone.*	In Catalog
	LPUT21JD	21 Steel Utility Cart *Available through Order Zone*	In Catalog
	PM05101	Ball Mount - 1.875 in. (48mm)	See Parts
	PM05201	Ball Mount - 2 in. (51mm)	See Parts

HPX Gas Green & Yellow
Continued

CODE	ATTACHMENT IDENTIFIER	DESCRIPTION	SUGGESTED LIST PRICE USD ($)
		ATTACHMENTS FOR FIELD CONVERSION Continued...	
	BM23989	Drawbar, 1.25 In. (38mm) *Ball Mount Sold Separately*	35.31
		Custom & High Performance:	
	VGB10544	Heavy Duty Front Suspension *Recommended for Vehicles equipped with Front Blade or Cab.*	249.31
	BM22449	High Capacity Alternator (HPX) *Intended for use on Gas Engine Models Only.*	356.31
	BM22703	Seat-Belt Comfort Strap (2)	77.04
	BM24453	Stereo Mounting Kit *Includes mounting kit only; must choose one of the following three head units to have complete stereo:* *Radio, Heavy Duty AM / FM / WB / AUX (SWJHD1120)* *Radio, Heavy Duty AM / FM / WB / SAT / I-POD (SWJHD1620)* *Radio, AM / FM / WB / CD / AUX / SAT Ready (SWJHD3620)* *Must order head unit through Parts. Stereo Mounting Kit not compatible with Deluxe Cab.*	521.09
		Hunting / Camo:	
	LP10312	Gun Boot IV GATOR Metal Mounting Bracket *Available through Order Zone.*	In Catalog
	LP10316	Gun Boot IV, Black *Available through Order Zone.*	In Catalog
	LP10319	Gun Mount Kit - Overhead *Includes 2 Gun Boot VI.* *Available through Order Zone*	In Catalog
	LP93103	Vehicle Cover, Cab / ROPS - Camo *Fits all Models Equipped with OPS and Deluxe Cab Structure.* *Available through Order Zone*	In Catalog
		Lights / Signals:	
	BM23197	Backup Alarm	101.66
	BM24013	Beacon Light *Requires OPS Poly Roof and OPS Switch Bank.*	219.36
	BM21649	Beacon Light Kit - Deluxe Cab *Requires Electrical Kit.*	371.29
	BM24590	Brake / Tail Light Kit	160.50
	BM24589	Deluxe Signal Light Kit *Includes turn signals (front and rear), brake lights, tail lights, and hazard lights.*	387.34
	BM21651	Front Light Kit - Deluxe Cab *Requires Electrical Kit.*	293.19
	BM23442	Hella HID Sport Driving Lights *Requires OPS Switch Bank for OPS or poly roof mounting, or Front Brushguard for bumper mounting.*	935.19
	BM24108	Hella Performance Spot Lights *Requires OPS Switch Bank for OPS or poly roof mounting, or Front Brushguard for bumper mounting.*	343.47

HPX Gas Green & Yellow
Continued

CODE	ATTACHMENT IDENTIFIER	DESCRIPTION	SUGGESTED LIST PRICE USD ($)
		ATTACHMENTS FOR FIELD CONVERSION Continued...	
	BM23370	Horn Kit	97.37
	BM24090	Long Range Light Kit *Requires OPS Switch Bank for OPS or poly roof mounting, or Front Brushguard for brushguard mounting.*	191.53
	BM24016	Mid-Range Light Kit *Requires OPS Switch Bank for OPS or poly roof mounting. Can be installed on the front or rear of OPS or roof.*	123.06
	BM24089	OPS Switch Bank *Accommodates up to three separate OPS accessory kits.*	67.41
	BM21652	Rear Light Kit - Deluxe Cab *Requires Electrical Kit.*	217.21
		Protection:	
	BM21913	Bedliner for Cargo Box *Must Order in Quantity of Two.*	323.14
	BM22612	CV Guards, Front	114.49
	VGB10132	Floormats	131.61
	BM24109	Heavy Duty Brush Guard *Attaches to standard front bumper*	249.31
	BM22618	Heavy Duty Fender Guard *Attaches to standard front bumper*	165.86
	LP92634	Large Deluxe Seat Cover - Yellow *Available through Order Zone.*	In Catalog
	LP92334	Large Seat Cover - Yellow *Available through Order Zone.*	In Catalog
	LP93107	Vehicle Cover, Cab / ROPS - Black *Fits all Models Equipped with OPS and Deluxe Cab Structure. Available through Order Zone.*	In Catalog
		Spanish North American Kit:	
	BM23066	Spanish Operator's Manual and Decal Kit	0.00
		Sprayers / Pressure Washers:	
	LP20850	25 Gallon Bed Sprayer *Available through Order Zone.*	In Catalog
	LP20851	45 Gallon Bed Sprayer *Available through Order Zone*	In Catalog
	LP22908	45 Gallon High Performance Sprayer *Available through Order Zone*	In Catalog
	LP20485	45 Gallon Tow-Behind Sprayer *Available through Order Zone*	In Catalog
	LP20853	90 Gallon Bed Sprayer *Available through Order Zone*	In Catalog

HPX Gas Green & Yellow

Continued

CODE	ATTACHMENT IDENTIFIER	DESCRIPTION	SUGGESTED LIST PRICE USD ($)
		ATTACHMENTS FOR FIELD CONVERSION Continued...	
	LP22909	90 Gallon High Performance Bed Sprayer *Available through Order Zone*	In Catalog
	LPGP2700GH	GatorPal High Pressure Washer (2700 psi, Honda engine) *Contact Dealer for pricing.*	In Catalog
	LPGP2700GS	GatorPal High Pressure Washer (2700 psi, Subaru engine) *Contact Dealer for pricing.*	In Catalog
	LPGP3000GH	GatorPal High Pressure Washer (3000 psi, Honda engine) *Contact Dealer for pricing.*	In Catalog
	LPGP3000GS	GatorPal High Pressure Washer (3000 psi, Subaru engine) *Contact Dealer for pricing.*	In Catalog
	LP22885	HP 150 in. Precision Boom *Compatible with all High Performance Sprayers* *Available through Order Zone*	In Catalog
	LP39963	HP 45 Gallon Sprayer - Tow Behind *Available through Order Zone*	In Catalog
	LP22884	HP Boomless Nozzles *Compatible with all High Performance Sprayers* *Available through Order Zone*	In Catalog
	LP22911	HP Standard Gator Boom *Compatible with all High Performance Sprayers* *Available through Order Zone*	In Catalog
		Winch:	
	BM24442	Warn® Winch (3000 Lb.) *Requires 1.25 in. front receiver hitch for front mount.* *Requires 1.25 in. rear receiver hitch for rear mount.* *Requires Rear Multi-Mount Harness (AM137110) for Rear Mount.*	879.54
	BM21392	Winch Accessories Kit *Accessory kit includes 1/2" shackle, 9,000 lbs. maximum capacity snatch block, (2) 1"x8' tree trunk protectors, and (1) pair of WARN winching gloves.*	129.47
		EXTENDED WARRANTY - RESIDENTIAL OWNERS/USE	
		Visit http://www.JohnDeere.com/ServicePlans for more information on John Deere Service Contracts. May not be Available in Parts of the U.S., Not Available in Canada. Price may vary due to driving distance and/or time from machine to dealership location.	
		John Deere Extended Service Plan - 2-Year Option *Available for T-Series, HPX and XUV utility vehicles only.)* *2-year extended service plan. (1 year of extended service protection);* *2-years of warranty transportation.*	139.99
		John Deere Extended Service Plan - 3-Year Option *3-year extended service plan. (2 years of extended service protection);* *3-years of warranty transportation.*	249.99

HPX Diesel Green & Yellow

Equipment for Base Machine

ENGINE:
18.5 Engine HP (854cc), 32 ft-lb (4.4 kg-m @ 2500 rpm)*
Three-cylinder, Liquid-cooled, 4-Cycle Diesel
Overhead Valves
Full Pressure Lubrication System
Replaceable Single Dry-Type Element Air Cleaner with Remote Intake
5.3 Gallon (20.1L) Fuel Capacity
Solid-state Ignition
Spark-arresting Muffler
ELECTRICAL:
Electric Start
21 Amp, Regulated, 3-Phase Alternator
340 CCA Battery
Two 37.5 Watt Halogen Headlights
TRANSAXLE/TRANSMISSION:
Continuously Variable Transmission
Two-speed Transaxle
Operator Selectable 4WD
25 mph (40 kph) Maximum Forward Speed
Traction Assist
Front and Rear Hydraulic Disk Brakes
Hand-operated Sealed Wet Disk Park brake
1.3 In. (33mm) Forged Rear Axles
STEERING/SUSPENSION:
Rack and Pinion Steering
McPherson Strut, Single A-arm Front Suspension with 5.15 in (131 mm) Coil-over-shock Rear Suspension with 3.50 In. (90mm) Travel
11 ft. Turning Radius
Ground Clearance:
6 In. (153 mm)
Ground Clearance (Under Foot Platform):
13 In (330 mm)
FRAME/STYLED PARTS:
Hydroform Technology Frame
PC/ASA (JDLOY) Hood and Fenders
OCCUPANT PROTECTION SYSTEM(OPS):
1.75 In. (43.8 mm) Steel Tubular Overhead Structure
3-pt. Seat Belts
SAE J2194 ROPS Certified
Multiple Passenger Handholds
OPERATOR STATION:
High-back Bucket Seats
7 In. (178 mm) Slide Rail Adjustment on Driver's Seat
Hip Restraint Bars for Driver and Passenger
Passenger Grab Handles
Glove Box
Storage Compartment Under Hood
Two Cup Holders
Fuel Gauge
Hour Meter
12v DC Outlet
FRONTAL PROTECTION:
Heavy-Duty Front Bumper
DIMENSIONS(WITH OPS):
112.5 In. Long x 59.5 In. Wide x 74.8 In. High (2.9x1.5x1.9 m)
PAYLOAD:
1,400 Lb (635 kg) Total Payload Capacity which Includes:
200 Lb (91 kg) Driver,
200 Lb (91 kg) Passenger, and 1000 Lb (454 kg) in Cargo Box
Towing Capacity: 1,300 Lb (590 kg)
CARGO BOX:
43.9 In. Long x 49 In. Wide x 9 In. Deep (1,116x1,244x229mm)
11.3 cu. ft (.32 cu. m) Capacity
900 Lbs (409 kg) Box Capacity
Tilting Box
Hinged (bottom) Tailgate
Load Guard
Hold Down Latch and Prop Rod
TIRES:
Front: 24x9.5-10 4-Ply HPAP
Rear: 24x10.5-10 4-Ply HPAP
Less Deluxe Property Care Package
Less OPS Rear Screen
SAFETY AND OPERATIONAL
Safety and Operational DVD
Operators Manual
*Engine HP is Provided by the Engine Manufacturer to be Used for Comparison Purposes Only, Actual Operating HP will be Less.

CODE	ATTACHMENT IDENTIFIER	DESCRIPTION	SUGGESTED LIST PRICE USD ($)

Select One Code From Each Required Category

BASE MACHINE

F.O.B. Janesville, Wisconsin

9906M	HPX Diesel Green & Yellow *Base Machine Suggested List Price Does Not Include $400 USD Destination Charge.*	10,799.00

DESTINATION

0202	US/CANADA	In Base Price
0230	AUSTRALIA/NEW ZEALAND	Same Price
0195	MEXICO	Same Price
0179	EUROPE	107.00

HPX Diesel Green & Yellow
Continued

CODE	ATTACHMENT IDENTIFIER	DESCRIPTION	SUGGESTED LIST PRICE USD ($)
		DESTINATION Continued...	
0250		ALL OTHER COUNTRIES	Same Price
		TIRES AND WHEELS	
1000		High-Performance All-Purpose (HPAP) Tires	In Base Price
1001		HPAT-Agressive Tread - Tires	203.00
1002		Turf Tires - Yellow	143.00
		SEATS	
2000		18 In. Bucket Seat - Yellow	In Base Price
2001		Bench Seat Yellow	Same Price
		OVERHEAD PROTECTION STRUCTURES (OPS)	
4000		OPS	In Base Price
4002		Deluxe Cab Frame/Including Glass Windshield with Wiper, Electrical Kit and Rear Window *Must order 5001 option when ordering 4002*	2,368.00
		POWER LIFT	
5001		Cargo Box Power Lift	929.00
5002		Manual Lift	In Base Price
		Attachments-Order as Desired	
		Spanish North American Kit:	
9435		Spanish North American Operato's Manual and Decal Kit	No Charge
		ATTACHMENTS FOR FIELD CONVERSION	
		Blades:	
	LPFBPPTJD1	Heavy Duty POWERtach Blade, 72" *Available through Order Zone*	In Catalog
	LPPK140	POWERtach Deflector Shield *Available through Order Zone*	In Catalog
	LPPK120	POWERtach Markers *Available through Order Zone*	In Catalog
	LPPWBK72	POWERtach Poly Wear Bar *Available through Order Zone*	In Catalog
	LPPK150	POWERtach Rubber Squeegee *Available through Order Zone*	In Catalog
	LPPK160	POWERtach Skid Shoes *Available through Order Zone*	In Catalog

HPX Diesel Green & Yellow
Continued

CODE	ATTACHMENT IDENTIFIER	DESCRIPTION	SUGGESTED LIST PRICE USD ($)
		ATTACHMENTS FOR FIELD CONVERSION Continued...	
		Cabs/Roofs/Windshields:	
	BM23638	Air Cleaner Relocation Kit (Diesel) *Quiet Cab Kit for Deluxe Cab. Requires Noise Reduction Kit for maximum performance. Can also be used with Poly Cab for noise reduction.*	61.37
	BM23608	Cab Heater *Requires Cab Heater Fitting Kit.*	1,130.99
	VGB10548	Cab Heater Fitting Kit	23.54
	BM23498	Deluxe Cab Frame *Requires Seat Belt Kit, Glass Door Kit, Glass Windshield with Wiper, and Rear Window Kit to complete full Deluxe Cab. Requires Remote Cargo Box Release kit if not equipped with cargo box power lift.*	1,443.43
	VGB10505	Electrical Kit *Required for field installed Deluxe cabs.*	94.16
	BM24560	Glass Door Kit - Deluxe Cab	2,427.83
	BM23507	Glass Windshield with Wiper - Deluxe Cab	874.19
	BM21656	Interior Light Kit - Deluxe Cab *Requires Electrical Kit.*	58.86
	BM23750	Noise Reduction Kit (Gas & Diesel) *Quiet Cab Kit for Deluxe Cab. Requires Air Cleaner Relocation Kit for maximum performance.*	373.43
	BM23742	OPS Full No-Scratch Windshield *Not compatible with Deluxe Cab Frame.*	531.79
	BM23741	OPS Full Poly Windshield *Not compatible with Deluxe Cab Frame.*	423.71
	BM23743	OPS Glass Windshield with Wiper *Not compatible with Deluxe Cab Frame.*	874.19
	BM23740	OPS Half Poly Windshield *Not compatible with Deluxe Cab Frame.*	339.19
	BM24115	OPS Poly Roof - Black	445.11
	BM24561	OPS Rear Panel	502.90
	LP10314	OPS Side Mirror - Left *Available through Order Zone.*	In Catalog
	LP10315	OPS Side Mirror - Right *Available through Order Zone.*	In Catalog
	LP93127	OPS Soft Roof - Black *Available through Order Zone*	In Catalog
	LP93123	OPS Soft Roof - Camo *Available through Order Zone*	In Catalog
	BM23505	Rear Window Kit - Deluxe Cab	225.77

HPX Diesel Green & Yellow
Continued

CODE	ATTACHMENT IDENTIFIER	DESCRIPTION	SUGGESTED LIST PRICE USD ($)
		ATTACHMENTS FOR FIELD CONVERSION Continued...	
	BM23755	Seat Belt Kit *Required with Deluxe Cab Frame*	144.46
	BM23508	Side Mirrors - Deluxe Cab	129.47
	BM21646	Visor (1) Kit - Deluxe cab	70.61
	BM23534	Windshield Washer Fluid Kit - Deluxe Cab *Requires Electrical Kit.*	173.34
		Cargo Box Options / Storage:	
	VGB10133	Cargo Box Bed Mat	113.41
	BM23993	Cargo Box Power Lift	994.03
	BM22572	Cargo Box Side Extension Kit	511.46
	BM22777	Front Hood Rack *Requires Front Brush Guard.*	241.81
	LPMB4611GB	Gator Tool Box *Contact Dealer for pricing.*	In Catalog
	LP93117	OPS Overhead Organizer - Black *Available through Order Zone*	In Catalog
	LP93113	OPS Overhead Organizer - Camo *Available through Order Zone*	In Catalog
	VGB10507	Remote Cargo Box Release Kit *Required if equipped with Deluxe Glass Cab and manual cargo box release.*	102.71
	BM22776	Side Storage Box	215.07
	LP93207	Soft Rear Screen and Organizer - Black *Available through Order Zone*	In Catalog
		Carts / Hitches:	
	BM19972	1.25 In. (38 mm) Front Receiver Hitch *Attaches to front bumper*	62.06
	VGB10038	1.25 In. (38 mm) Rear Receiver Hitch	113.41
	LPPCT10LXATV	10AT Cart *Available through Order Zone*	In Catalog
	LPPCT17ATJD	17AT Cart *Available through Order Zone.*	In Catalog
	LPUT21JD	21 Steel Utility Cart *Available through Order Zone*	In Catalog
	PM05101	Ball Mount - 1.875 in. (48mm)	See Parts
	PM05201	Ball Mount - 2 in. (51mm)	See Parts

HPX Diesel Green & Yellow
Continued

CODE	ATTACHMENT IDENTIFIER	DESCRIPTION	SUGGESTED LIST PRICE USD ($)
		ATTACHMENTS FOR FIELD CONVERSION Continued...	
	BM23989	Drawbar, 1.25 In. (38mm) *Ball Mount Sold Separately*	35.31
		Custom & High Performance:	
	VGB10544	Heavy Duty Front Suspension *Recommended for Vehicles equipped with Front Blade or Cab.*	249.31
	BM22703	Seat-Belt Comfort Strap (2)	77.04
	BM24453	Stereo Mounting Kit *Includes mounting kit only; must choose one of the following three head units to have complete stereo:* *Radio, Heavy Duty AM / FM / WB / AUX (SWJHD1120)* *Radio, Heavy Duty AM / FM / WB / SAT / I-POD (SWJHD1620)* *Radio, AM / FM / WB / CD / AUX / SAT Ready (SWJHD3620)* *Must order head unit through Parts. Stereo Mounting Kit not compatible with Deluxe Cab.*	521.09
		Engine:	
	AM882530	Adaptor Parts for Engine Coolant Heater	See Parts
	AR87167	Engine Coolant Heater (110 Volt) *Requires adapter parts for engine coolant heater. Requires AM134805 Engine Block Heater Adapter.*	See Parts
		Hunting / Camo:	
	LP10312	Gun Boot IV GATOR Metal Mounting Bracket *Available through Order Zone.*	In Catalog
	LP10316	Gun Boot IV, Black *Available through Order Zone.*	In Catalog
	LP10319	Gun Mount Kit - Overhead *Includes 2 Gun Boot VI.* *Available through Order Zone*	In Catalog
	LP93103	Vehicle Cover, Cab / ROPS - Camo *Fits all Models Equipped with OPS and Deluxe Cab Structure.* *Available through Order Zone*	In Catalog
		Lights / Signals:	
	BM23197	Backup Alarm	101.66
	BM24013	Beacon Light *Requires OPS Poly Roof and OPS Switch Bank.*	219.36
	BM21649	Beacon Light Kit - Deluxe Cab *Requires Electrical Kit.*	371.29
	BM24590	Brake / Tail Light Kit	160.50
	BM24589	Deluxe Signal Light Kit *Includes turn signals (front and rear), brake lights, tail lights, and hazard lights.*	387.34
	BM21651	Front Light Kit - Deluxe Cab *Requires Electrical Kit.*	293.19
	BM23442	Hella HID Sport Driving Lights *Requires OPS Switch Bank for OPS or poly roof mounting, or Front Brushguard for bumper mounting.*	935.19

HPX Diesel Green & Yellow
Continued

CODE	ATTACHMENT IDENTIFIER	DESCRIPTION	SUGGESTED LIST PRICE USD ($)
		ATTACHMENTS FOR FIELD CONVERSION Continued...	
	BM24108	Hella Performance Spot Lights *Requires OPS Switch Bank for OPS or poly roof mounting, or Front Brushguard for bumper mounting.*	343.47
	BM23370	Horn Kit	97.37
	BM24090	Long Range Light Kit *Requires OPS Switch Bank for OPS or poly roof mounting, or Front Brushguard for brushguard mounting.*	191.53
	BM24016	Mid-Range Light Kit *Requires OPS Switch Bank for OPS or poly roof mounting. Can be installed on the front or rear of OPS or roof.*	123.06
	BM24089	OPS Switch Bank *Accommodates up to three separate OPS accessory kits.*	67.41
	BM21652	Rear Light Kit - Deluxe Cab *Requires Electrical Kit.*	217.21
		Protection:	
	BM21913	Bedliner for Cargo Box *Must Order in Quantity of Two.*	323.14
	BM22612	CV Guards, Front	114.49
	VGB10132	Floormats	131.61
	BM24109	Heavy Duty Brush Guard *Attaches to standard front bumper*	249.31
	BM22618	Heavy Duty Fender Guard *Attaches to standard front bumper*	165.86
	LP92634	Large Deluxe Seat Cover - Yellow *Available through Order Zone.*	In Catalog
	LP92334	Large Seat Cover - Yellow *Available through Order Zone.*	In Catalog
	LP93107	Vehicle Cover, Cab / ROPS - Black *Fits all Models Equipped with OPS and Deluxe Cab Structure. Available through Order Zone.*	In Catalog
		Spanish North American Kit:	
	BM23066	Spanish Operator's Manual and Decal Kit	0.00
		Sprayers / Pressure Washers:	
	LP20850	25 Gallon Bed Sprayer *Available through Order Zone.*	In Catalog
	LP20851	45 Gallon Bed Sprayer *Available through Order Zone*	In Catalog
	LP22908	45 Gallon High Performance Sprayer *Available through Order Zone*	In Catalog

HPX Diesel Green & Yellow
Continued

CODE	ATTACHMENT IDENTIFIER	DESCRIPTION	SUGGESTED LIST PRICE USD ($)
		ATTACHMENTS FOR FIELD CONVERSION Continued...	
	LP20485	45 Gallon Tow-Behind Sprayer *Available through Order Zone*	In Catalog
	LP20853	90 Gallon Bed Sprayer *Available through Order Zone*	In Catalog
	LP22909	90 Gallon High Performance Bed Sprayer *Available through Order Zone*	In Catalog
	LPGP2700GH	GatorPal High Pressure Washer (2700 psi, Honda engine) *Contact Dealer for pricing.*	In Catalog
	LPGP2700GS	GatorPal High Pressure Washer (2700 psi, Subaru engine) *Contact Dealer for pricing.*	In Catalog
	LPGP3000GH	GatorPal High Pressure Washer (3000 psi, Honda engine) *Contact Dealer for pricing.*	In Catalog
	LPGP3000GS	GatorPal High Pressure Washer (3000 psi, Subaru engine) *Contact Dealer for pricing.*	In Catalog
	LP22885	HP 150 in. Precision Boom *Compatible with all High Performance Sprayers* *Available through Order Zone*	In Catalog
	LP39963	HP 45 Gallon Sprayer - Tow Behind *Available through Order Zone*	In Catalog
	LP22884	HP Boomless Nozzles *Compatible with all High Performance Sprayers* *Available through Order Zone*	In Catalog
	LP22911	HP Standard Gator Boom *Compatible with all High Performance Sprayers* *Available through Order Zone*	In Catalog
		Winch:	
	BM24442	Warn® Winch (3000 Lb.) *Requires 1.25 in. front receiver hitch for front mount.* *Requires 1.25 in. rear receiver hitch for rear mount.* *Requires Rear Multi-Mount Harness (AM137110) for Rear Mount.*	879.54
	BM21392	Winch Accessories Kit *Accessory kit includes 1/2" shackle, 9,000 lbs. maximum capacity snatch block, (2) 1"x8' tree trunk protectors, and (1) pair of WARN winching gloves.*	129.47
		EXTENDED WARRANTY - RESIDENTIAL OWNERS/USE	
		Visit http://www.JohnDeere.com/ServicePlans for more information on John Deere Service Contracts. May not be Available in Parts of the U.S., Not Available in Canada. Price may vary due to driving distance and/or time from machine to dealership location.	
		John Deere Extended Service Plan - 2-Year Option *Available for T-Series, HPX and XUV utility vehicles only.)* *2-year extended service plan. (1 year of extended service protection);* *2-years of warranty transportation.*	139.99
		John Deere Extended Service Plan - 3-Year Option	249.99

HPX Diesel Green & Yellow

Continued

CODE	ATTACHMENT IDENTIFIER	DESCRIPTION	SUGGESTED LIST PRICE USD ($)
		EXTENDED WARRANTY - RESIDENTIAL OWNERS/USE	
		Continued...	
		3-year extended service plan. (2 years of extended service protection);	
		3-years of warranty transportation.	

Standard-Duty 72 In. Front Blade
(For Gator Utility Vehicles, Crossover UV's and M-Gators)

Equipment for Base Machine

72-Inch Wide Straight Blade
Three-Position Manual Angling
Quick Installation for Both Frame and Hydraulic Lift
Two Adjustable Skid Shoes
Trip Protection
Replaceable Cutting Edge
Less Implement Lift Frame and Lift

CODE	ATTACHMENT IDENTIFIER	DESCRIPTION	SUGGESTED LIST PRICE USD ($)
		Select One Code From Each Required Category	
		BASE MACHINE	
8014M		Standard-Duty 72 In. Front Blade (For Gator Utility Vehicles, Crossover UV's and M-Gators)	633.00
		LIFT FRAME KITS	
1000		Implement Lift Frame Kit *For use on XUV 625i, 825i, 855D and A2 & A3 Utility Vehicles Only.*	514.00
1001		Implement Lift Frame Kit *For Use on TS, TX, TX TURF, TH, and M-Gator A1 Utility Vehicles.*	442.00
1003		Implement Lift Frame Kit *For use on XUV 620i, 850D and HPX Utility Vehicles.*	514.00
1010		Less Implement Lift Frame Kit	In Base Price
		POWER / HYDRAULIC LIFT KITS	
2000		Hydraulic Implement Lift Kit *For use on XUV 620i, 850D and HPX Utility Vehicles. Includes Adapter Kit for hydraulic implement lift.*	896.00
2001		Power Implement Lift Kit *For Use on TS, TX, TX TURF, TH, and M-Gator A1 Utility Vehicles.*	730.00
2002		Hydraulic Implement Lift Kit *For Use on XUV 625i, 825i, 855D and A2 & A3 Utility Vehicles Only.*	823.00
2010		Less Implement Lift Kit	In Base Price
		ATTACHMENTS - ORDER AS DESIRED	
		European CE Kit:	
9100		European CE Conversion Kit for 72 In. Front Blade *This Code Must be Ordered to Receive a 72 In. Front Blade Which Meets CE Mark Requirements. Kit Includes Pictorial Decals and Operator's Manuals in English, French, Italian, German and Spanish.*	No Charge
		ATTACHMENTS FOR FIELD CONVERSION	
		Blades:	

Standard-Duty 72 In. Front Blade
(For Gator Utility Vehicles, Crossover UV's and M-Gators)

Continued

CODE	ATTACHMENT IDENTIFIER	DESCRIPTION	SUGGESTED LIST PRICE USD ($)
		ATTACHMENTS FOR FIELD CONVERSION Continued...	
	BM23029	Plow Markers	38.51
		Custom & High Performance:	
	VGB10544	Heavy Duty Front Suspension *For Use On HPX, 620 and 850 XUV Utility Vehicles Only.* *Recommended for Crossover Vehicles equipped with* *Front Blade or Cab.*	249.31
		Miscellaneous:	
	BM24354	Adapter Kit for Hydraulic Implement Lift *For use on XUV 620i, 850D and HPX Utility Vehicles.*	78.11
	BM22606	Hydraulic Implement Lift Kit *For use on HPX, XUV 620i, 625i, 825i, 850D, 855D and Military A2 & A3 Utility Vehicles.*	880.61
	VGB10086	Implement Lift Frame Kit *For Use on TS, TX, TX TURF, TH, TE and M-Gator A1 Utility Vehicles.*	472.94
	BM23081	Implement Lift Frame Kit *For use on XUV 625i, 825i, 855D and A2 Utility Vehicles Only.*	549.99
	BM24344	Implement Lift Frame Kit *For use on XUV 620i, 850D and HPX Utility Vehicles.*	549.99
	BM21459	Power Implement Lift Kit *For use on TS, TX, TX TURF, TH and Military A1 Utility Vehicles.*	781.10
	TY15650	Rear Tire Chains, 25x11-12 (pair)	See Parts
	TY25802	Tire Chains (for HPAT 24x9.5-10)	See Parts
	TY25326	Tire Chains for 26x10.50-12 Turf Drive Tires *For all Wheel Steer Tractors.*	See Parts
		Seats / Wheels / Tires:	
	TY24328	Tire Chains (Pair) for 24x12.00-12 In. Drive Tires *For Turf and Knobby Tires. Not Intended for use on all Four Rear Tires.*	See Parts
	TY15958	Tire Chains (Pair) for 26x12-12 Tires	See Parts
	TY25800	Tire Chains (for HPAP 24x10.5-10 or HPAT 24x12-10)	See Parts
	TY25814	Tire Chains (for Turf/Hard Surface 24x12.00-10)	See Parts

Standard-Duty 72 In. V-Blade
(For Gator Utility Vehicles, Crossover UV's and M-Gators)

Equipment for Base Machine

72-Inch Wide Adjustable V-Blade
Converts from V-Position to an Inverted Scoop to a Straight Blade
Quick Installation for Both Frame and Hydraulic Lift
Two Adjustable Skid Shoes
Trip Protection
Replaceable Cutting Edge
Less Implement Lift Frame and Lift

CODE	ATTACHMENT IDENTIFIER	DESCRIPTION	SUGGESTED LIST PRICE USD ($)
		Select One Code From Each Required Category	
		BASE MACHINE	
8015M		Standard-Duty 72 In. V-Blade (For Gator Utility Vehicles, Crossover UV's and M-Gators)	789.00
		LIFT FRAME KITS	
1000		Implement Lift Frame Kit *For use on XUV 625i, 825i, 855D and A2 & A3 Utility Vehicles Only.*	514.00
1001		Implement Lift Frame Kit *For Use on TS, TX, TX TURF, TH, and M-Gator A1 Utility Vehicles.*	442.00
1003		Implement Lift Frame Kit *For use on XUV 620i, 850D and HPX Utility Vehicles.*	514.00
1010		Less Implement Lift Frame Kit	In Base Price
		POWER / HYDRAULIC LIFT KITS	
2000		Hydraulic Implement Lift Kit *For use on XUV 620i, 850D and HPX Utility Vehicles. Includes Adapter Kit for hydraulic implement lift.*	896.00
2001		Power Implement Lift Kit *For Use on TS, TX, TX TURF, TH, and M-Gator A1 Utility Vehicles.*	730.00
2002		Hydraulic Implement Lift Kit *For Use on XUV 625i, 825i, 855D and A2 & A3 Utility Vehicles Only.*	823.00
2010		Less Implement Lift Kit	In Base Price
		ATTACHMENTS - ORDER AS DESIRED	
		European CE Kit:	
9100		European CE Conversion Kit for 72 In. V-Blade *This Code Must be Ordered to Receive a 72 In. V-Blade Which Meets CE Mark Requirements. Kit Includes Pictorial Decals and Operator's Manuals in English, French, Italian, German and Spanish.*	No Charge
		ATTACHMENTS FOR FIELD CONVERSION	

Standard-Duty 72 In. V-Blade
(For Gator Utility Vehicles, Crossover UV's and M-Gators)

Continued

CODE	ATTACHMENT IDENTIFIER	DESCRIPTION	SUGGESTED LIST PRICE USD ($)
		ATTACHMENTS FOR FIELD CONVERSION Continued...	
		Blades:	
	BM23029	Plow Markers	38.51
		Custom & High Performance:	
	VGB10544	Heavy Duty Front Suspension *For Use On HPX, 620 and 850 XUV Utility Vehicles Only.* *Recommended for Crossover Vehicles equipped with* *Front Blade or Cab.*	249.31
		Miscellaneous:	
	BM24354	Adapter Kit for Hydraulic Implement Lift *For use on XUV 620i, 850D and HPX Utility Vehicles.*	78.11
	BM22606	Hydraulic Implement Lift Kit *For use on HPX, XUV 620i, 625i, 825i, 850D, 855D and Military A2 & A3 Utility Vehicles.*	880.61
	VGB10086	Implement Lift Frame Kit *For Use on TS, TX, TX TURF, TH, TE and M-Gator A1 Utility Vehicles.*	472.94
	BM23081	Implement Lift Frame Kit *For use on XUV 625i, 825i, 855D and A2 Utility Vehicles Only.*	549.99
	BM24344	Implement Lift Frame Kit *For use on XUV 620i, 850D and HPX Utility Vehicles.*	549.99
	BM21459	Power Implement Lift Kit *For use on TS, TX, TX TURF, TH and Military A1 Utility Vehicles.*	781.10
	TY15650	Rear Tire Chains, 25x11-12 (pair)	See Parts
	TY25802	Tire Chains (for HPAT 24x9.5-10)	See Parts
	TY25326	Tire Chains for 26x10.50-12 Turf Drive Tires *For all Wheel Steer Tractors.*	See Parts
		Seats / Wheels / Tires:	
	TY24328	Tire Chains (Pair) for 24x12.00-12 In. Drive Tires *For Turf and Knobby Tires. Not Intended for use on all Four Rear Tires.*	See Parts
	TY15958	Tire Chains (Pair) for 26x12-12 Tires	See Parts
	TY25800	Tire Chains (for HPAP 24x10.5-10 or HPAT 24x12-10)	See Parts
	TY25814	Tire Chains (for Turf/Hard Surface 24x12.00-10)	See Parts

EXTENDED WARRANTY - RESIDENTIAL OWNERS/USE

Visit http://www.JohnDeere.com/ServicePlans for more information on John Deere Service Contracts. May not be Available in Parts of the U.S., Not Available in Canada. Price may vary due to driving distance and/or time from machine to dealership location.

John Deere Extended Service Plan - 2-Year Option *Available for T-Series, HPX and XUV utility vehicles only.)* *2-year extended service plan. (1 year of extended service protection);* *2-years of warranty transportation.*	399.99

Standard-Duty 72 In. V-Blade
(For Gator Utility Vehicles, Crossover UV's and M-Gators)

Continued

CODE	ATTACHMENT IDENTIFIER	DESCRIPTION	SUGGESTED LIST PRICE USD ($)
		EXTENDED WARRANTY - RESIDENTIAL OWNERS/USE **Continued...**	
		John Deere Extended Service Plan - 3-Year Option *3-year extended service plan. (2 years of extended service protection);* *3-years of warranty transportation.*	569.99

RC2048 Lift-Type Rotary Cutter

Equipment for Base Machine

Cutting Width:
48 In. (1220 mm)
Cutting Height:
1.5 to 9 In. (38 to 229 mm)
Cutting Capacity (Diameter):
0 to 1 In. (0 to 25 mm)
Cutting Chamber Depth:
7.5 In. (190 mm)
Tractor PTO HP Range: 18 - 45 HP
Tractor PTO: 540 RPM
Implement PTO: ASABE Category III PTO
Hitch:
Lift-Type Category I, Adaptable to II, iMatch, and AutoHitch Compatible
Overall Width: 51 In. (1,291.4 mm)
Overall Length: 86.6 In. (2,199.6 mm)
Deck Shape: Flat-open Round Back
Deck Type: Single
Deck Thickness: 11 Gauge (3 mm)
Skirt Thickness: 11 Gauge (3 mm)
PTO Driveline Options: Shear Bolt or Slip Clutch Drivelines Available
Gear Case HP Rating: 45 HP
Blade Type:
Heat Treated, Suction Type Blades
Blade Thickness: 0.5 In. (13 mm)
Blade Width: 3 In. (76 mm)
Blade Tip Speed: 13,090 fpm (66.5 m/s)
Blade Pan Type:
Round Pan-Type Blade Holder
Blade Pan Diameter: 22.3 In. (567 mm)
Solid Rubber or Laminated Tire Options

Use front and rear enclosures in areas where thrown objects could be hazardous.

iMatch Quick Coupler required with 2305 Tractor to facilitate driveline length.

CODE	ATTACHMENT IDENTIFIER	DESCRIPTION	SUGGESTED LIST PRICE USD ($)
		Select One Code From Each Required Category	
		BASE MACHINE	
0511XF		RC2048 Lift-Type Rotary Cutter	1,453.00
		DRIVELINES	
1000		Driveline with Slip Clutch *Recommended.*	133.00
1010		Driveline with Shear Bolt	In Base Price
		FRONT AND REAR ENCLOSURES	
		Use enclosures in areas where thrown objects could be hazardous.	
2000		Front and Rear Chain Enclosure *Recommended.*	192.00
2010		Front Rubber with Foot Guards and Rear Metal Enclosure	In Base Price
2020		Front Chain and No Rear Enclosure	47.00
2030		Front Rubber with Foot Guards and No Rear Enclosure	-29.00
2040		No Front or Rear Enclosure	-49.00
		TIRES	
3000		Puncture Proof Laminated Tire *Recommended.*	In Base Price
3010		Solid Rubber Tire	-10.00

RC2048 Lift-Type Rotary Cutter

Continued

CODE	ATTACHMENT IDENTIFIER	DESCRIPTION	SUGGESTED LIST PRICE USD ($)
		ATTACHMENTS FOR FIELD CONVERSION	
		Miscellaneous:	
	5TIFC711289	French Operator's Manual and Decal Kit for RC20 Series Rotary Cutters	116.37

RC2060 Lift-Type Rotary Cutter

Equipment for Base Machine

Cutting Width:
60 In. (1524 mm)
Cutting Height:
1.5 to 9 In. (38 to 229 mm)
Cutting Capacity (Diameter):
0 to 1 In. (0 to 25 mm)
Cutting Chamber Depth:
7.5 In. (190 mm)
Tractor PTO HP Range: 20 - 65 HP
Tractor PTO: 540 RPM
Implement PTO: ASABE Category III PTO
Hitch:
Lift-Type Category I, Adaptable to II, iMatch, and AutoHitch Compatible
Overall Width: 63 In. (1,600.2 mm)
Overall Length: 101.2 In. (2,570.5 mm)
Deck Shape: Flat-open Round Back
Deck Type: Single
Deck Thickness: 11 Gauge (3 mm)
Skirt Thickness: 11 Gauge (3 mm)
PTO Driveline Options: Shear Bolt or Slip Clutch Drivelines Available
Gear Case HP Rating: 65 HP
Blade Type:
Heat Treated, Suction Type Blades
Blade Thickness: 0.5 In. (13 mm)
Blade Width: 3 In. (76 mm)
Blade Tip Speed: 14,355 fpm (72.8 m/s)
Blade Pan Type:
Round Pan-Type Blade Holder
Blade Pan Diameter: 22.3 In. (567 mm)
Tire Options:
Solid Rubber or Laminated Tire Options

CODE	ATTACHMENT IDENTIFIER	DESCRIPTION	SUGGESTED LIST PRICE USD ($)
		Select One Code From Each Required Category	
		BASE MACHINE	
0512XF		RC2060 Lift-Type Rotary Cutter	1,634.00
		DRIVELINES	
1000		Driveline with Slip Clutch *Recommended.*	143.00
1010		Driveline with Shear Bolt	In Base Price
		FRONT AND REAR ENCLOSURES	
		Use enclosures in areas where thrown objects could be hazardous.	
2000		Front and Rear Chain Enclosure *Recommended.*	231.00
2010		Front Rubber with Foot Guards and Rear Metal Enclosure	In Base Price
2020		Front Chain and No Rear Enclosure	56.00
2030		Front Rubber with Foot Guards and No Rear Enclosure	-30.00
2040		No Front or Rear Enclosure	-46.00
		TIRES	
3000		Puncture Proof Laminated Tire *Recommended.*	In Base Price
3010		Solid Rubber Tire	-10.00
		ATTACHMENTS FOR FIELD CONVERSION	

RC2060 Lift-Type Rotary Cutter

Continued

CODE	ATTACHMENT IDENTIFIER	DESCRIPTION	SUGGESTED LIST PRICE USD ($)
		ATTACHMENTS FOR FIELD CONVERSION ...Continued...	
		Miscellaneous:	
	5TIFC711289	French Operator's Manual and Decal Kit for RC20 Series Rotary Cutters	116.37

RC2072 Lift-Type Rotary Cutter

Equipment for Base Machine

Cutting Width:
72 In. (1,830 mm)
Cutting Height:
1.5 to 9 In. (38 to 229 mm)
Cutting Capacity (Diameter):
0 to 1 In. (0 to 25 mm)
Cutting Chamber Depth:
7.5 In. (190 mm)
Tractor PTO HP Range: 25 - 65 HP
Tractor PTO: 540 RPM
Implement PTO: ASABE Category III PTO
Hitch:
Lift-Type Category I, Adaptable to II, iMatch, and AutoHitch Compatible
Overall Width: 75 In. (1,905 mm)
Overall Length: 111.5 In. (2,832.1 mm)
Deck Shape: Flat-open Round Back
Deck Type: Single
Deck Thickness: 11 Gauge (3 mm)
Skirt Thickness: 11 Gauge (3 mm)
PTO Driveline Options: Shear Bolt or Slip Clutch Drivelines Available
Gear Case HP Rating: 65 HP
Blade Type:
Heat Treated, Suction Type Blades
Blade Thickness: 0.5 In. (13 mm)
Blade Width: 3 In. (76 mm)
Blade Tip Speed: 14,955 fpm (76 m/s)
Blade Pan Type:
Round Pan-Type Blade Holder
Blade Pan Diameter:
28.5 In. (723.9 mm)
Tire Options:
Solid Rubber or Laminated Tire Options

CODE	ATTACHMENT IDENTIFIER	DESCRIPTION	SUGGESTED LIST PRICE USD ($)
		Select One Code From Each Required Category	
		BASE MACHINE	
0513XF		RC2072 Lift-Type Rotary Cutter	1,875.00
		DRIVELINES	
1000		Driveline with Slip Clutch *Recommended.*	143.00
1010		Driveline with Shear Bolt	In Base Price
		FRONT AND REAR ENCLOSURES	
		Use enclosures in areas where thrown objects could be hazardous.	
2000		Front and Rear Chain Enclosure *Recommended.*	321.00
2010		Front Rubber with Foot Guards and Rear Metal Enclosure	In Base Price
2020		Front Chain and No Rear Enclosure	86.00
2030		Front Rubber with Foot Guards and No Rear Enclosure	-40.00
2040		No Front or Rear Enclosure	-55.00
		TIRES	
3000		Puncture Proof Laminated Tire *Recommended.*	In Base Price
3010		Solid Rubber Tire	-10.00
		ATTACHMENTS FOR FIELD CONVERSION	

RC2072 Lift-Type Rotary Cutter

Continued

CODE	ATTACHMENT IDENTIFIER	DESCRIPTION	SUGGESTED LIST PRICE USD ($)
		ATTACHMENTS FOR FIELD CONVERSION ...Continued...	
		Miscellaneous:	
	5TIFC711289	French Operator's Manual and Decal Kit for RC20 Series Rotary Cutters	116.37

RC2084 Lift-Type Rotary Cutter

Equipment for Base Machine

Cutting Width:
84 In. (2,134 mm)
Cutting Height:
1.75 to 11 In. (44.45 to 279.4 mm)
Cutting Capacity (Diameter):
0 to 1 In. (0 to 25 mm)
Cutting Chamber Depth:
9.75 In. (248 mm)
Tractor PTO HP Range: 45 - 90 HP
Tractor PTO: 540 RPM
Implement PTO: ASABE Category IIII PTO
Hitch:
Lift-Type Category II,
Category II Quick Hitch Compatible
Overall Width: 88 In. (2,235 mm)
Overall Length: 124 In. (3,150 mm)
Deck Shape: Flat-open Round Back
Deck Type: Single
Deck Thickness: 10 Gauge (3.4 mm)
Skirt Thickness: 10 Gauge (3.4 mm)

PTO Driveline Options:
Slip Clutch Standard
Gear Case HP Rating: 90 HP
Blade Type:
Heat Treated, Suction Type Blades
Blade Thickness: 0.5 In. (13 mm)
Blade Width: 3 In. (76 mm)
Blade Tip Speed: 14,380 fpm (73 m/s)
Blade Pan Type:
Round Pan-Type Blade Holder
Blade Pan Diameter:
32.5 In. (825.5 mm)
Tire Options:
Single or Dual Laminated Tire

CODE	ATTACHMENT IDENTIFIER	DESCRIPTION	SUGGESTED LIST PRICE USD ($)
		Select One Code From Each Required Category	
		BASE MACHINE	
0514XF		RC2084 Lift-Type Rotary Cutter	3,489.00
		FRONT AND REAR ENCLOSURES	
		Use enclosures in areas where thrown objects could be hazardous.	
2000		Front and Rear Chain Enclosure *Recommended.*	In Base Price
2010		Front Rubber with Foot Guards and Rear Metal Enclosure	-210.00
2020		Front Chain and No Rear Enclosure	-154.00
2030		Front Rubber with Foot Guards and No Rear Enclosure	-268.00
2040		No Front or Rear Enclosure	-326.00
		TIRES	
3000		Puncture Proof Laminated Tire	In Base Price
3010		Dual Puncture Proof Laminated Tire	101.00
		ATTACHMENTS FOR FIELD CONVERSION	
		Miscellaneous:	
	5TIFC711289	French Operator's Manual and Decal Kit for RC20 Series Rotary Cutters	116.37

THIS PAGE IS INTENTIONALLY LEFT BLANK

FM1012R Rear Discharge Flex-Wing Grooming Mower with Light Bar

Equipment for Base Machine

Type: Flex Wing, Rear Discharge
Transport Width: 8 Ft. 3 In.
Cutting Width: 12 Ft.
Transport Tongue Weight: 700 lbs.
Transport Tires: (2) 20.5 x 8-10
Transport Length: 13 Ft. 2 In.
Transport Height: 6 Ft.
Tractor PTO Speed: 540 RPM
Tractor Horsepower: 30 to 80 HP
Splitter Gearbox HP: 100 HP
Shipping Weight: 2960 lbs.
Overall Width: 12 Ft. 2 In.
Operating Tongue Weight: 310 lbs.
Mower Deck Gearbox HP: 40 HP
Maximum Overall Length:
  14 Ft. 5 In.
Mainframe Construction:
  3 In. Square Tubing
Input Driveline:
  Category IIII Constant Velocity
Hitch: Drawbar Category I
Hitch Adjustment:
  Self-Leveling, Multi-Position
Ground Pressure: 9.0 PSI
Gearbox Ratio: 1:1.92
Driveline: Category III
Drive Type: Gearbox Over V-Belt
Deck Thickness: 8 Gauge Steel Plate
Deck Overlap: 6 In.
Deck Lift Cylinders:
  3-1/2 In. x 10 In. Single Acting
Cutting Height Range: 1 In. to 5 In.
Cutting Height Adjustment:
  Spacer On Caster
Center Deck Cutting Width: 5 Ft.
Wing Deck Cutting Width: 4 Ft.
Caster Wheels:
  (8) 15 x 6-6 Pneumatic
Caster Wheel Bearings:
  Roller Bearings
Blade Tip Speed:
  16,950 FPM Average
Blade Spindles: (7) Cast Iron
Blade Spindle Bearings: Tapered Roller
Blade Overlap: 1-1/2 In.
Blade Dimensions:
  (7) 1/4 In. x 2-1/2 In.
Blade Composition:
  Heat-Treated Alloy Steel
Belts: B Section, Aramid/Kevlar
Belt Adjustment: Spring-Loaded Idler
Assembly/Set-Up Time:
  75 Minutes (Approximate)
Approximate Operating Weight: 2900 lbs.
Front Roller Kit:
  Wing Decks (Optional Attachment, 1 Required)
Front Roller Kit:
  Rear Deck (Optional Attachment, 1 Required)
Approximate Operating Angles:
  25 Degrees Up and 15 Degrees Down

CODE	ATTACHMENT IDENTIFIER	DESCRIPTION	SUGGESTED LIST PRICE USD ($)

Select One Code From Each Required Category

BASE MACHINE

0421XF		FM1012R Rear Discharge Flex-Wing Grooming Mower with Light Bar	18,703.00

ATTACHMENTS FOR FIELD CONVERSION

		Miscellaneous:	
	5WD1004116	Anti Streaking Kit (FM10 Series)	117.60
	5WD1032454	FM10 Series Hydraulic Unlock System	524.88
	5WD1031818	FM10 Series Rear Roller Kit	85.12
	5WD1006417	Front Roller Kit - Contains 1 Roller (FM1012 Center Deck Only, FM1015 and FM1017 Fits all Decks, GM1060R, GM1072R and GM1084R)	101.92
	5WD1006421	Front Roller Kit - Contains 1 Roller (FM1012 Wing Decks Only)	171.72
	5WD1031385	Light Bar Kit (FM10 Series and FM3012) *Serial Number 1XFFM10XAB0000106 and above on the FM10 Series and all FM30 Series Mowers.*	486.00

FM1012R Rear Discharge Flex-Wing Grooming Mower with Light Bar

Continued

CODE	ATTACHMENT IDENTIFIER	DESCRIPTION	SUGGESTED LIST PRICE USD ($)
		ATTACHMENTS FOR FIELD CONVERSION ...Continued...	
	5WD1004486	Light Bar Kit (FM10 Series) *Serial Number 1XFFM10XAB0000105 and below.*	476.16

FM1015R Rear Discharge Flex-Wing Grooming Mower with Light Bar

Equipment for Base Machine

Type: Flex Wing, Rear Discharge
Transport Width: 8 Ft. 4 In.
Cutting Width: 15 Ft.
Transport Tongue Weight: 720 lbs.
Transport Tires:
  (2) 20.5 x 8 - 10
Transport Length: 13 Ft. 5 In.
Transport Height: 7 Ft. 9 In.
Tractor PTO Speed: 540 RPM
Tractor Horsepower: 35 to 80 HP
Splitter Gearbox HP: 100 HP
Shipping Weight: 3200 lbs.
Overall Width: 15 Ft. 2 In.
Operating Tongue Weight: 330 lbs.
Mower Deck Gearbox HP: 40 HP
Maximum Overall Length:
  14 Ft. 8 In.
Mainframe Construction:
  3 In. Square Tubing
Input Driveline:
  Category IIII Constant Velocity
Hitch: Drawbar Category II
Hitch Adjustment:
  Self-Leveling, Multi-Position
Ground Pressure: 9.7 lbs. PSI
Gearbox Ratio: 1:1.92
Driveline: Category III
Drive Type: Gearbox Over V-Belt
Deck Thickness: 8 Gauge Steel Plate
Deck Overlap: 6 In.
Deck Lift Cylinders:
  3-1/2 In. x 10 In. Single Acting

Cutting Height Range: 1 In. to 5 In.
Cutting Height Adjustment:
  Spacer On Caster
Center Deck Cutting Width: 6 Ft.
Wing Deck Cutting Width: 5 Ft.
Caster Wheels:
  (8) 15 x 6-6 Pneumatic
Caster Wheel Bearings:
  Roller Bearings
Blade Tip Speed:
  16,950 FPM Average
Blade Spindles: (9) Cast Iron
Blade Spindle Bearings: Tapered Roller
Blade Overlap: 1-1/2 In.
Blade Dimensions:
  (9) 1/4 In. x 2-1/2 In.
Blade Composition:
  Heat-Treated Alloy Steel
Belts: B Section, Aramid/Kevlar
Belt Adjustment: Spring-Loaded Idler
Assembly/Set-Up Time:
 75 Minutes (Approximate)
Approximate Operating Weight: 3,200 lbs.
Front Roller Kit: (Optional Attachment, 3 required)
Approximate Operating Angles:
  25 Degrees Up and 15 Degrees Down

CODE	ATTACHMENT IDENTIFIER	DESCRIPTION	SUGGESTED LIST PRICE USD ($)

Select One Code From Each Required Category

BASE MACHINE

0422XF		FM1015R Rear Discharge Flex-Wing Grooming Mower with Light Bar	19,522.00

ATTACHMENTS FOR FIELD CONVERSION

		Miscellaneous:	
	5WD1004116	Anti Streaking Kit (FM10 Series)	117.60
	5WD1032454	FM10 Series Hydraulic Unlock System	524.88
	5WD1031818	FM10 Series Rear Roller Kit	85.12
	5WD1006417	Front Roller Kit - Contains 1 Roller (FM1012 Center Deck Only, FM1015 and FM1017 Fits all Decks, GM1060R, GM1072R and GM1084R)	101.92
	5WD1031385	Light Bar Kit (FM10 Series and FM3012) *Serial Number 1XFFM10XAB0000106 and above on the FM10 Series and all FM30 Series Mowers.*	486.00
	5WD1004486	Light Bar Kit (FM10 Series) *Serial Number 1XFFM10XAB0000105 and below.*	476.16

THIS PAGE IS INTENTIONALLY LEFT BLANK

FM1017R Rear Discharge Flex-Wing Grooming Mower with Light Bar

Equipment for Base Machine

Type: Flex Wing, Rear Discharge
Transport Width: 8 Ft. 3 In.
Cutting Width: 17 Ft.
Transport Tongue Weight: 800 lbs.
Transport Tires: (2) 20.5 x 8 - 10
Transport Length: 13 Ft. 5 In.
Transport Height: 8 Ft. 9 In.
Tractor PTO Speed: 540 RPM
Tractor Horsepower: 40 to 80 HP
Splitter Gearbox HP: 100 HP
Shipping Weight: 3340 lbs.
Overall Width: 17 Ft. 2 In.
Operating Tongue Weight: 400 lbs.
Mower Deck Gearbox HP: 40 HP
Maximum Overall Length:
  14 Ft. 8 In.
Mainframe Construction:
  3 In. Square Tubing
Input Driveline:
  Category IIII Constant Velocity
Hitch: Drawbar - Category II
Hitch Adjustment:
  Self-Leveling, Multi-Position
Ground Pressure: 10.2 lbs. PSI
Gearbox Ratio: 1:1.92
Driveline: Category III
Drive Type: Gearbox Over V-Belt
Deck Thickness: 8 Gauge Steel Plate
Deck Overlap: 6 In.
Deck Lift Cylinders:
  3-1/2 In. x 10 In. Single Acting
Cutting Height Range: 1 In. to 5 In.
Cutting Height Adjustment:
  Spacer On Caster
Center Deck Cutting Width: 6 Ft.
Wing Deck Cutting Width: 6 Ft.
Caster Wheels:
  (8) 15 x 6-6 Pneumatic
Caster Wheel Bearings:
  Roller Bearings
Blade Tip Speed:
  16,950 FPM Average
Blade Spindles: (9) Cast Iron
Blade Spindle Bearings: Tapered Roller
Blade Overlap: 1-1/2 In.
Blade Dimensions:
  (9) 1/4 In. x 2-1/2 In.
Blade Composition:
  Heat-Treated Alloy Steel
Belts: B Section, Aramid/Kevlar
Belt Adjustment: Spring-Loaded Idler
Assembly/Set-Up Time:
  75 Minutes (Approximate)
Approximate Operating Weight: 3340 lbs.
Front Roller Kit: (Optional Attachment, 3 Required)
Approximate Operating Angles:
  25 Degrees Up and 15 Degrees Down

CODE	ATTACHMENT IDENTIFIER	DESCRIPTION	SUGGESTED LIST PRICE USD ($)

Select One Code From Each Required Category

BASE MACHINE

0423XF		FM1017R Rear Discharge Flex-Wing Grooming Mower with Light Bar	21,711.00

ATTACHMENTS FOR FIELD CONVERSION

		Miscellaneous:	
	5WD1004116	Anti Streaking Kit (FM10 Series)	117.60
	5WD1032454	FM10 Series Hydraulic Unlock System	524.88
	5WD1031818	FM10 Series Rear Roller Kit	85.12
	5WD1006417	Front Roller Kit - Contains 1 Roller (FM1012 Center Deck Only, FM1015 and FM1017 Fits all Decks, GM1060R, GM1072R and GM1084R)	101.92
	5WD1031385	Light Bar Kit (FM10 Series and FM3012) *Serial Number 1XFFM10XAB0000106 and above on the FM10 Series and all FM30 Series Mowers.*	486.00
	5WD1004486	Light Bar Kit (FM10 Series) *Serial Number 1XFFM10XAB0000105 and below.*	476.16

THIS PAGE IS INTENTIONALLY LEFT BLANK

FM2012R Flex-Wing Grooming Mower with Pneumatic Tires

Equipment for Base Machine

Available with Pneumatic Tires Only
Free-Floating Decks:
  4 In. Front/Rear and Left/Right
Wing Travel is 30 Degrees Up
  and 15 Degrees Down
Clevis Hitch - Rigid or
  Floating Optional
Auto-Engage Transport Latch
Lights Standard
Hydraulic Unlocking System Available
Rear Chain Shields Standard
Type: Flex Wing, Rear Discharge
Transport Width: 7 Ft. 7 In.
Cutting Width: 12 Ft.
Transport Tongue Weight: 774 lbs.
Transport Tires:
  (2) 20.5 In. x 8 In. x 10 In.
Transport Length: 11 Ft. 9 In.
Transport Height: 6 Ft. 2 In.
Tractor PTO Speed: 540 RPM
Tractor Horsepower: 25 to 80 HP
Splitter Gearbox HP: 80 HP
Shipping Weight: 2465 lbs.
Overall Width: 12 Ft. 2 In.
Operating Tongue Weight: 374 lbs.
Mower Deck Gearbox HP: 50 HP
Maximum Overall Length:
  12 Ft. 7 In.
Mainframe Construction:
  3.5 In. Double Round Tubing
Input Driveline:
  Category VI Constant Velocity
  with Slip Clutch
Hitch:
  Category I or Category II Drawbar
Hitch Adjustment: 4 Position
Ground Pressure: 9.1 lbs. PSI
Gearbox Ratio: 1:3:09 (Spiral Gears)
Driveline: Category III
Drive Type: Gearbox over V-belts (2)
Deck Thickness: 8 Gauge Steel Plate
Deck Overlap:
  6 In. (Adjustable to 9 In.)
Deck Lift Cylinders:
  2-1/2 In. x 10 In. Single Acting
Cutting Height Range: 1 In. to 5 In.
Cutting Height Adjustment:
  Spacer On Caster
Center Deck Cutting Width: 5 Ft.
Wing Deck Cutting Width: 4 Ft.
Caster Wheels:
  (12) 11 In. x 4 In. Pneumatic or
  10 In. x 3.2 In. Solid
Caster Wheel Bearings:
  Caged Roller Needle Bearings
Blade Tip Speed: 15,747 FPM Average
Blade Spindles: (9) Cast Iron
Blade Spindle Bearings:
  Shielded Ball Bearings 2 Per Spindle
Blade Composition:
  Heat-Treated Alloy Steel
Belts: B-Section, Polyester/Cogged
Belt Adjustment: Single Point,
  Slotted Track Adjustment - No Idlers
Blade Overlap: 1-1/8 In.
Blade Dimensions:
  (6) 16-5/8 In. x 2 In. x 1/4 In.
  (3) 20-3/16 In. x 2 In. x 1/4 In.
Assembly/Set-Up Time:
  45 Minutes (Approximate)
Approximate Operating Weight: 2465 lbs.
Front Rollers Standard
Mulching Kit Available
1 Year Warranty

CODE	ATTACHMENT IDENTIFIER	DESCRIPTION	SUGGESTED LIST PRICE USD ($)

Select One Code From Each Required Category

BASE MACHINE

0431XF		FM2012R Flex-Wing Grooming Mower with Pneumatic Tires	18,091.00

ATTACHMENTS - ORDER AS DESIRED

9010		Mulching Kit	931.00
9020		Hydraulic Unlock System	485.00
9030		Float Hitch	126.00

ATTACHMENTS FOR FIELD CONVERSION

		Miscellaneous:	
	5BP0099597	Floating Hitch	126.00

FM2012R Flex-Wing Grooming Mower with Pneumatic Tires

Continued

CODE	ATTACHMENT IDENTIFIER	DESCRIPTION	SUGGESTED LIST PRICE USD ($)
		ATTACHMENTS FOR FIELD CONVERSION ...Continued...	
	5BP0099552	Hydraulic Unlock System	485.00
	5BP0099556	Mulching Kit	931.00

FM2015R Flex-Wing Grooming Mower with Pneumatic Tires

Equipment for Base Machine

Available with Pneumatic Tires Only
Free-Floating Decks:
  4 In. Front/Rear and Left/Right
Wing Travel is 30 Degrees Up
  and 15 Degrees Down
Clevis Hitch - Rigid or
  Floating Optional
Auto-Engage Transport Latch
Lights Standard
Hydraulic Unlocking System Available
Rear Chain Shields Standard
Type: Flex Wing, Rear Discharge
Transport Width: 8 Ft. 1 In.
Cutting Width: 15 Ft.
Transport Tongue Weight: 807 lbs.
Transport Tires:
  (2) 20.5 In. x 8 In. x 10 In.
Transport Length: 12 Ft. 2 In.
Transport Height: 7 Ft. 8 In.
Tractor PTO Speed: 540 RPM
Tractor Horsepower: 30 to 80 HP
Splitter Gearbox HP: 80 HP
Shipping Weight: 2595 lbs.
Overall Width: 15 Ft. 2 In.
Operating Tongue Weight: 381 lbs.
Mower Deck Gearbox HP: 50 HP
Maximum Overall Length: 13 Ft.
Mainframe Construction:
  3.5 In. Double Round Tubing
Input Driveline:
  Category VI Constant Velocity
  with Slip Clutch
Hitch:
  Category I or Category II Drawbar
Hitch Adjustment: 4 Position
Ground Pressure: 9.6 lbs. PSI
Gearbox Ratio: 1:3:09 (Spiral Gears)
Driveline: Category III
Drive Type: Gearbox over V-belts (2)
Deck Thickness: 8 Gauge Steel Plate
Deck Overlap:
  6 In. (Adjustable to 9 In.)
Deck Lift Cylinders:
  2-1/2 In. x 10 In. Single Acting
Cutting Height Range: 1 In. to 5 In.
Cutting Height Adjustment:
  Spacer On Caster
Center Deck Cutting Width: 6 Ft.
Wing Deck Cutting Width: 5 Ft.
Caster Wheels:
  (12) 11 In. x 4 In. Pneumatic or
  10 In. x 3.2 In. Solid
Caster Wheel Bearings:
  Caged Roller Needle Bearings
Blade Tip Speed: 16,863 FPM Average
Blade Spindles: (9) Cast Iron
Blade Spindle Bearings:
  Shielded Ball Bearings 2 Per Spindle
Blade Composition:
  Heat-Treated Alloy Steel
Blade Dimensions:
  (6) 20-3/16 In. x 2 In. x 1/4 In.
  (3) 24-1/2 In. x 2-1/4 In. x 1/4 In.
Blade Overlap: 1-1/8 In.
Belts: B-Section, Polyester/Cogged
Belt Adjustment: Single Point,
  Slotted Track Adjustment - No Idlers
Assembly/Set-Up Time:
  45 Minutes (Approximate)
Approximate Operating Weight: 2595 lbs.
Front Rollers Standard
Mulching Kit Available
1 Year Warranty

CODE	ATTACHMENT IDENTIFIER	DESCRIPTION	SUGGESTED LIST PRICE USD ($)

Select One Code From Each Required Category

BASE MACHINE

0432XF		FM2015R Flex-Wing Grooming Mower with Pneumatic Tires	19,332.00

ATTACHMENTS - ORDER AS DESIRED

9020		Hydraulic Unlock System	485.00
9030		Float Hitch	126.00
9040		Mulching Kit	1,016.00

ATTACHMENTS FOR FIELD CONVERSION

		Miscellaneous:	
	5BP0099597	Floating Hitch	126.00

FM2015R Flex-Wing Grooming Mower with Pneumatic Tires

Continued

CODE	ATTACHMENT IDENTIFIER	DESCRIPTION	SUGGESTED LIST PRICE USD ($)
		ATTACHMENTS FOR FIELD CONVERSION ...Continued...	
	5BP0099552	Hydraulic Unlock System	485.00
	5BP0099557	Mulching Kit	1,016.73

FM2017R Flex-Wing Grooming Mower with Pneumatic Tires

Equipment for Base Machine

Available with Pneumatic Tires Only
Free-Floating Decks:
  4 In. Front/Rear and Left/Right
Wing Travel is 30 Degrees Up
  and 15 Degrees Down
Clevis Hitch - Rigid or
  Floating Optional
Auto-Engage Transport Latch
Lights Standard
Hydraulic Unlocking System Available
Rear Chain Shields Standard
Type: Flex Wing, Rear Discharge
Transport Width: 8 Ft. 4 In.
Cutting Width: 17 Ft.
Transport Tongue Weight: 953 lbs.
Transport Tires:
  (2) 20.5 In. x 8 In. x 10 In.
Transport Length: 12 Ft. 2 In.
Transport Height: 8 Ft. 7 In.
Tractor PTO Speed: 540 RPM
Tractor Horsepower: 35 to 80 HP
Splitter Gearbox HP: 80 HP
Shipping Weight: 2720 lbs.
Overall Width: 17 Ft. 2 In.
Operating Tongue Weight: 389 lbs.
Mower Deck Gearbox HP: 50 HP
Maximum Overall Length: 13 Ft.
Mainframe Construction:
  3.5 In. Double Round Tubing
Input Driveline:
  Category VI Constant Velocity
  with Slip Clutch
Hitch:
  Category I or Category II Drawbar
Hitch Adjustment: 4 Position
Ground Pressure: 10 lbs. PSI
Gearbox Ratio: 1:3:09 (Spiral Gears)
Driveline: Category III
Drive Type: Gearbox over V-belts (2)
Deck Thickness: 8 Gauge Steel Plate
Deck Overlap:
  6 In. (Adjustable to 9 In.)
Deck Lift Cylinders:
  2-1/2 In. x 10 In. Single Acting
Cutting Height Range: 1 In. to 5 In.
Cutting Height Adjustment:
  Spacer On Caster
Center Deck Cutting Width: 6 Ft.
Wing Deck Cutting Width: 6 Ft.
Caster Wheels:
  (12) 11 In. x 4 In. Pneumatic or
  10 In. x 3.2 In. Solid
Caster Wheel Bearings:
  Caged Roller Needle Bearings
Blade Tip Speed: 16,732 FPM Average
Blade Spindles: (9) Cast Iron
Blade Spindle Bearings:
  Shielded Ball Bearings 2 Per Spindle
Blade Overlap: 1-1/8 In.
Blade Dimensions:
  (9) 24-1/2 In. x 2-1/4 In. x 1/4 In.
Blade Composition:
  Heat-Treated Alloy Steel
Belts: B-Section, Polyester/Cogged
Belt Adjustment: Single Point,
  Slotted Track Adjustment - No Idlers
Assembly/Set-Up Time:
  45 Minutes (Approximate)
Approximate Operating Weight: 2720 lbs.
Front Rollers Standard
Mulching Kit Available
1 Year Warranty

CODE	ATTACHMENT IDENTIFIER	DESCRIPTION	SUGGESTED LIST PRICE USD ($)
		Select One Code From Each Required Category	
		BASE MACHINE	
0433XF		FM2017R Flex-Wing Grooming Mower with Pneumatic Tires	20,641.00
		ATTACHMENTS - ORDER AS DESIRED	
9020		Hydraulic Unlock System	485.00
9030		Float Hitch	126.00
9040		Mulching Kit	1,119.00
		ATTACHMENTS FOR FIELD CONVERSION	
		Miscellaneous:	
	5BP0099597	Floating Hitch	126.00

FM2017R Flex-Wing Grooming Mower with Pneumatic Tires

Continued

CODE	ATTACHMENT IDENTIFIER	DESCRIPTION	SUGGESTED LIST PRICE USD ($)
		ATTACHMENTS FOR FIELD CONVERSION ...Continued...	
	5BP0099552	Hydraulic Unlock System	485.00
	5BP0099558	Mulching Kit	1,119.82

FM2112R Flex-Wing Grooming Mower with Pneumatic Tires

Equipment for Base Machine

Free-Floating Decks:
  4 In. Front/Rear and Left/Right
Wing Travel is 30 Degrees Up
  and 15 Degrees Down
Clevis Hitch - Rigid or
  Floating Optional
Auto-Engage Transport Latch
Lights Standard
Hydraulic Unlocking System Available
Rear Chain Shields Standard
Type: Flex Wing, Rear Discharge
Transport Width: 7 Ft. 7 In.
Cutting Width: 12 Ft.
Transport Tongue Weight: 945 lbs.
Transport Tires:
  (2) 23 In. x 10.5 In. x 12 In.
Transport Length: 11 Ft. 10 In.
Transport Height: 6 Ft. 2 In.
Tractor PTO Speed: 540 RPM
Tractor Horsepower: 35 to 80 HP
Splitter Gearbox HP: 80 HP
Shipping Weight: 2821 lbs.
Overall Width: 12 Ft. 2 In.
Operating Tongue Weight: 456 lbs.
Mower Deck Gearbox HP: 50 HP
Maximum Overall Length:
  13 Ft. 10 In.
Mainframe Construction:
  4 In. Double Round Tubing
Input Driveline:
  Category VI Constant Velocity
  with Slip Clutch
Hitch:
  Category I or Category II Drawbar
Hitch Adjustment: 4 Position
Ground Pressure: 6.5 lbs. PSI
Gearbox Ratio: 1:3:09 (Spiral Gears)
Driveline: Category III
Drive Type: Gearbox over V-belts (2)
Deck Thickness: 8 Gauge Steel Plate
Deck Overlap:
  6 In. (Adjustable to 9 In.)
Deck Lift Cylinders:
  2-1/2 In. x 10 In. Single Acting
Cutting Height Range: 1 In. to 5 In.
Cutting Height Adjustment:
  Spacer On Caster
Center Deck Cutting Width: 5 Ft.
Wing Deck Cutting Width: 4 Ft.
Caster Wheels:
  (12) 13 In. x 6.5 In. Pneumatic
Caster Wheel Bearings:
  Caged Roller Needle Bearings
Blade Tip Speed: 15,747 FPM Average
Blade Spindles: (9) Cast Iron
Blade Spindle Bearings:
  Shielded Ball Bearings 2 Per Spindle
Blade Composition:
  Heat-Treated Alloy Steel
Belts: B-Section, Polyester/Cogged
Belt Adjustment: Single Point,
  Slotted Track Adjustment - No Idlers
Blade Overlap: 1-1/8 In.
Blade Dimensions:
  (6) 16-5/8 In. x 2 In. x 1/4 In.
  (3) 20-3/16 In. x 2 In. x 1/4 In.
Assembly/Set-Up Time:
  45 Minutes (Approximate)
Approximate Operating Weight: 2821 lbs.
Front Rollers Standard
Mulching Kit Available
1 Year Warranty

CODE	ATTACHMENT IDENTIFIER	DESCRIPTION	SUGGESTED LIST PRICE USD ($)
		Select One Code From Each Required Category	
		BASE MACHINE	
0441XF		FM2112R Flex-Wing Grooming Mower with Pneumatic Tires	19,742.00
		ATTACHMENTS - ORDER AS DESIRED	
9010		Mulching Kit	931.00
9020		Hydraulic Unlock System	485.00
9030		Float Hitch	126.00
		ATTACHMENTS FOR FIELD CONVERSION	
		Miscellaneous:	
	5BP0099597	Floating Hitch	126.00

FM2112R Flex-Wing Grooming Mower with Pneumatic Tires
Continued

CODE	ATTACHMENT IDENTIFIER	DESCRIPTION	SUGGESTED LIST PRICE USD ($)
		ATTACHMENTS FOR FIELD CONVERSION ...Continued...	
	5BP0099552	Hydraulic Unlock System	485.00
	5BP0099556	Mulching Kit	931.00

FM2115R Flex-Wing Grooming Mower with Pneumatic Tires

Equipment for Base Machine

Free-Floating Decks:
  4 In. Front/Rear and Left/Right
Clevis Hitch - Rigid or
  Floating Optional
Wing Travel is 30 Degrees Up
  and 15 Degrees Down
Auto-Engage Transport Latch
Lights Standard
Hydraulic Unlocking System Available
Rear Chain Shields Standard
Type: Flex Wing, Rear Discharge
Transport Width: 8 Ft. 1 In.
Cutting Width: 15 Ft.
Transport Tongue Weight: 986 lbs.
Transport Tires:
  (2) 23 In. x 10.5 In. x 12 In.
Transport Length: 12 Ft. 2 In.
Transport Height: 7 Ft. 8 In.
Tractor PTO Speed: 540 RPM
Tractor Horsepower: 35 to 80 HP
Splitter Gearbox HP: 80 HP
Shipping Weight: 3130 lbs.
Overall Width: 15 Ft. 2 In.
Operating Tongue Weight: 466 lbs.
Mower Deck Gearbox HP: 50 HP
Maximum Overall Length:
  14 Ft. 7 In.
Mainframe Construction:
  4 In. Double Round Tubing
Input Driveline:
  Category VI Constant Velocity
  with Slip Clutch
Hitch:
  Category I or Category II Drawbar
Hitch Adjustment: 4 Position
Ground Pressure: 7.2 lbs. PSI
Gearbox Ratio: 1:3:09 (Spiral Gears)
Driveline: Category III
Drive Type: Gearbox over V-belts (2)
Deck Thickness: 8 Gauge Steel Plate
Deck Overlap:
  6 In. (Adjustable to 9 In.)
Deck Lift Cylinders:
  2-1/2 In. x 10 In. Single Acting
Cutting Height Range: 1 In. to 5 In.
Cutting Height Adjustment:
  Spacer On Caster
Center Deck Cutting Width: 6 Ft.
Wing Deck Cutting Width: 5 Ft.
Caster Wheels:
  (12) 13 In. x 6.5 In. Pneumatic
Caster Wheel Bearings:
  Caged Roller Needle Bearings
Blade Tip Speed: 16,863 FPM Average
Blade Spindles: (9) Cast Iron
Blade Spindle Bearings:
  Shielded Ball Bearings 2 Per Spindle
Blade Composition:
  Heat-Treated Alloy Steel
Blade Dimensions:
  (6) 20-3/16 In. x 2 In. x 1/4 In.
  (3) 24-1/2 In. x 2-1/4 In. x 1/4 In.
Blade Overlap: 1-1/8 In.
Belts: B-Section, Polyester/Cogged
Belt Adjustment: Single Point,
  Slotted Track Adjustment - No Idlers
Assembly/Set-Up Time:
  45 Minutes (Approximate)
Approximate Operating Weight: 3130 lbs.
Front Rollers Standard
Mulching Kit Available
1 Year Warranty

CODE	ATTACHMENT IDENTIFIER	DESCRIPTION	SUGGESTED LIST PRICE USD ($)
		Select One Code From Each Required Category	
		BASE MACHINE	
0442XF		FM2115R Flex-Wing Grooming Mower with Pneumatic Tires	20,962.00
		ATTACHMENTS - ORDER AS DESIRED	
9020		Hydraulic Unlock System	485.00
9030		Float Hitch	126.00
9040		Mulching Kit	1,016.00
		ATTACHMENTS FOR FIELD CONVERSION	
		Miscellaneous:	
	5BP0099597	Floating Hitch	126.00

FM2115R Flex-Wing Grooming Mower with Pneumatic Tires
Continued

CODE	ATTACHMENT IDENTIFIER	DESCRIPTION	SUGGESTED LIST PRICE USD ($)
		ATTACHMENTS FOR FIELD CONVERSION ...Continued...	
	5BP0099552	Hydraulic Unlock System	485.00
	5BP0099557	Mulching Kit	1,016.73

FM2117R Flex-Wing Grooming Mower with Pneumatic Tires

Equipment for Base Machine

Free-Floating Decks:
  4 In. Front/Rear and Left/Right
Wing Travel is 30 Degrees Up
  and 15 Degrees Down
Clevis Hitch - Rigid or
  Floating Optional
Auto-Engage Transport Latch
Lights Standard
Hydraulic Unlocking System Available
Rear Chain Shields Standard
Type: Flex Wing, Rear Discharge
Transport Width: 8 Ft. 4 In.
Cutting Width: 17 Ft.
Transport Tongue Weight: 1170 lbs.
Transport Tires:
  (2) 23 In. x 10.5 In. x 12 In.
Transport Length: 12 Ft. 4 In.
Transport Height: 8 Ft. 7 In.
Tractor PTO Speed: 540 RPM
Tractor Horsepower: 35 to 80 HP
Splitter Gearbox HP: 80 HP
Shipping Weight: 3438 lbs.
Overall Width: 17 Ft. 2 In.
Operating Tongue Weight: 477 lbs.
Mower Deck Gearbox HP: 50 HP
Maximum Overall Length:
  15 Ft. 5 In.
Mainframe Construction:
  4 In. Double Round Tubing
Input Driveline:
  Category VI Constant Velocity
  with Slip Clutch
Hitch:
  Category I or Category II Drawbar
Hitch Adjustment: 4 Position
Ground Pressure: 8.0 lbs. PSI
Gearbox Ratio: 1:3:09 (Spiral Gears)
Driveline: Category III
Drive Type: Gearbox over V-belts (2)
Deck Thickness: 8 Gauge Steel Plate
Deck Overlap:
  6 In. (Adjustable to 9 In.)
Deck Lift Cylinders:
  2-1/2 In. x 10 In. Single Acting
Cutting Height Range: 1 In. to 5 In.
Cutting Height Adjustment:
  Spacer On Caster
Center Deck Cutting Width: 6 Ft.
Wing Deck Cutting Width: 6 Ft.
Caster Wheels:
  (12) 13 In. x 6.5 In. Pneumatic
Caster Wheel Bearings:
  Caged Roller Needle Bearings
Blade Tip Speed: 16,732 FPM Average
Blade Spindles: (9) Cast Iron
Blade Spindle Bearings:
  Shielded Ball Bearings 2 Per Spindle
Blade Overlap: 1-1/8 In.
Blade Dimensions:
  (9) 24-1/2 In. x 2-1/4 In. x 1/4 In.
Blade Composition:
  Heat-Treated Alloy Steel
Belts: B-Section, Polyester/Cogged
Belt Adjustment: Single Point,
  Slotted Track Adjustment - No Idlers
Assembly/Set-Up Time:
  45 Minutes (Approximate)
Approximate Operating Weight: 3438 lbs.
Front Rollers Standard
Mulching Kit Available
1 Year Warranty

CODE	ATTACHMENT IDENTIFIER	DESCRIPTION	SUGGESTED LIST PRICE USD ($)
		Select One Code From Each Required Category	
		BASE MACHINE	
0443XF		FM2117R Flex-Wing Grooming Mower with Pneumatic Tires	22,375.00
		ATTACHMENTS - ORDER AS DESIRED	
9020		Hydraulic Unlock System	485.00
9030		Float Hitch	126.00
9040		Mulching Kit	1,119.00
		ATTACHMENTS FOR FIELD CONVERSION	
		Miscellaneous:	
	5BP0099597	Floating Hitch	126.00

FM2117R Flex-Wing Grooming Mower with Pneumatic Tires

Continued

CODE	ATTACHMENT IDENTIFIER	DESCRIPTION	SUGGESTED LIST PRICE USD ($)
		ATTACHMENTS FOR FIELD CONVERSION ...Continued...	
	5BP0099552	Hydraulic Unlock System	485.00
	5BP0099558	Mulching Kit	1,119.82

FM2120R Flex-Wing Grooming Mower with Pneumatic Tires

Equipment for Base Machine

Free-Floating Decks:
  4 In. Front/Rear and Left/Right
Wing Travel is 30 Degrees Up
  and 15 Degrees Down
Clevis Hitch - Rigid or
  Floating Optional
Auto-Engage Transport Latch
Lights Standard
Hydraulic Unlocking System Available
Rear Chain Shields Standard
Type: Flex Wing, Rear Discharge
Transport Width: 8 Ft. 9 In.
Cutting Width: 20 Ft.
Transport Tongue Weight: 1220 lbs.
Transport Tires:
  (2) 23 In. x 10.5 In. x 12 In.
Transport Length: 15 Ft.
Transport Height: 9 Ft. 8 In.
Tractor PTO Speed: 540 RPM
Tractor Horsepower: 35 to 80 HP
Splitter Gearbox HP: 80 HP
Shipping Weight: 3747 lbs.
Overall Width: 20 Ft. 2 In.
Operating Tongue Weight: 489 lbs.
Mower Deck Gearbox HP: 50 HP
Maximum Overall Length:
  16 Ft. 3 In.
Mainframe Construction:
  4 In. Double Round Tubing
Input Driveline:
  Category VI Constant Velocity
  with Slip Clutch
Hitch:
  Category I or Category II Drawbar
Hitch Adjustment: 4 Position
Ground Pressure: 8.7 lbs. PSI
Gearbox Ratio: 1:3:09 (Spiral Gears)
Driveline: Category III
Drive Type: Gearbox over V-belts (2)
Deck Thickness: 8 Gauge Steel Plate
Deck Overlap:
  6 In. (Adjustable to 9 In.)
Deck Lift Cylinders:
  2-1/2 In. x 10 In. Single Acting
Cutting Height Range: 1 In. to 5 In.
Cutting Height Adjustment:
  Spacer On Caster
Center Deck Cutting Width: 7 Ft.
Wing Deck Cutting Width: 7 Ft.
Caster Wheels:
  (12) 13 In. x 6.5 In. Pneumatic
Caster Wheel Bearings:
  Caged Roller Needle Bearings
Blade Tip Speed: 16,338 FPM Average
Blade Spindles: (9) Cast Iron
Blade Spindle Bearings:
  Shielded Ball Bearings 2 Per Spindle
Blade Overlap: 1-1/2 In.
Blade Dimensions:
  (9) 28-1/2 In. x 2-1/4 In. x 1/4 In.
Blade Composition:
  Heat-Treated Alloy Steel
Belts: B-Section, Polyester/Cogged
Belt Adjustment: Single Point,
  Slotted Track Adjustment - No Idlers
Assembly/Set-Up Time:
  120 Minutes (Approximate)
Approximate Operating Weight: 3747 lbs.
Front Rollers Standard
Mulching Kit Available
1 Year Warranty

CODE	ATTACHMENT IDENTIFIER	DESCRIPTION	SUGGESTED LIST PRICE USD ($)
		Select One Code From Each Required Category	
		BASE MACHINE	
0444XF		FM2120R Flex-Wing Grooming Mower with Pneumatic Tires	25,768.00
		ATTACHMENTS - ORDER AS DESIRED	
9020		Hydraulic Unlock System	485.00
9030		Float Hitch	126.00
9040		Mulching Kit	1,306.00
		ATTACHMENTS FOR FIELD CONVERSION	
		Miscellaneous:	
	5BP0099597	Floating Hitch	126.00

FM2120R Flex-Wing Grooming Mower with Pneumatic Tires

Continued

CODE	ATTACHMENT IDENTIFIER	DESCRIPTION	SUGGESTED LIST PRICE USD ($)
		ATTACHMENTS FOR FIELD CONVERSION ...Continued...	
	5BP0099552	Hydraulic Unlock System	485.00
	5BP0099559	Mulching Kit	1,306.62

FM3012 Rear Discharge Flex-Wing Grooming Mower with Light Bar

Equipment for Base Machine

10 ea. 10 x 4 in. Solid Rubber Gauge Wheels
2 ea. 20.5 x 8.75 in. Non-Highway Speed Rated Transport Tires
10 Gauge Reinforced Deck
Wing Float: 20 degrees up / 15 degrees down
Deck Overlap: 6 In.
Blade Overlap: 1.5 In.
Blade Spindles: (9) Cast Iron
Blade Dimensions: (9) .25 x 2.5 In.
Belts: B-Section, Kevlar
Tractor PTO Speed: 540 RPM
Overall Machine Width: 12 Ft. 7 In.
Working Machine Width: 12 Ft. 5 In.
Transport Width: 7 Ft. 9 In.
Transport Length: 10 Ft. 6 In.
Machine Weight: 1,750 lbs.
HP Requirements: 25 - 60 HP
Cutting Height from 1 In. to 4.5 In.
Blade Tip Speed: 16,200 Ft./Minute
Type: Rear Discharge
Front Antiscalping Roller: Standard (3 per deck)
Input Driveline: Gear Box over V-Belt
Input Driveline: ASAE Category III CV
Wing Driveline: ASAE Category III
Shipping Weight: 2,095 lbs.
Set-up Time: 1.25 Hrs.
1 Year Machine Warranty
3 Year Residential Gear Box Warranty

CODE	ATTACHMENT IDENTIFIER	DESCRIPTION	SUGGESTED LIST PRICE USD ($)
		Select One Code From Each Required Category	
		BASE MACHINE	
0551XF		FM3012 Rear Discharge Flex-Wing Grooming Mower with Light Bar	13,252.00
		REAR CHAIN	
2000		Rear Chain Shield	In Base Price
2095		Less Rear Chain Shield	-300.00
		TIRES	
3000		Highway Rated Tires	In Base Price
3010		Non-Highway Rated Tires	-154.00
		ATTACHMENTS - ORDER AS DESIRED	
9000		Hydraulic Wing Latch Release Kit	475.00
		ATTACHMENTS FOR FIELD CONVERSION	
		Miscellaneous:	
	5WD1029535	Hydraulic Wing Latch Release Kit (FM3012)	513.00
	5WD1031385	Light Bar Kit (FM10 Series and FM3012) *Serial Number 1XFFM10XAB0000106 and above on the FM10 Series and all FM30 Series Mowers.*	486.00
	5WD1008038	Rear Chain Shield Kit - Rear Discharge (GM3054 & FM3012) *Quantity of (3) required for FM3012 as each deck requires quantity of (1).*	106.40

FM3012 Rear Discharge Flex-Wing Grooming Mower with Light Bar
Continued

THIS PAGE IS INTENTIONALLY LEFT BLANK

GM1048E Economy Rear Discharge Grooming Mower

Equipment for Base Machine

4 Rubber Swivel Tires
11 Gauge Reinforced Deck
Spindle Shafts Greased from the
  Top for Easy Service
Single Belt Drive with
  Automatic Belt Idler
Rugged 30-HP Gearbox
One Piece Balanced Steel Pulleys
High Blade Speed
Floating Top Hitch
iMatch Compatible (Quick-Attach System)
Working Width: 48 In.
Overall Machine Width: 51 In.
Machine Weight: 340 lbs.
HP Requirements: 16 - 30 HP
Deck Thickness: 11 Gauge
Cutting Height from 1 In. to 4 In.
Category I Hitch
Blade Tip Speed:
  13,188 Ft./Minute
Type: Rear Discharge
Front Antiscalping Roller: Optional
Mulching Kit: Optional
Rotor RPM: 3,037 RPM
Driveline: 1-3/8 In. ASAE Category II
Shipping Weight: 398 lbs.
Set-up Time: 30 Minute
1 Year Warranty

CODE	ATTACHMENT IDENTIFIER	DESCRIPTION	SUGGESTED LIST PRICE USD ($)
		Select One Code From Each Required Category	
		BASE MACHINE	
0461XF		GM1048E Economy Rear Discharge Grooming Mower *iMatch kit sold separately.*	2,302.00
		ATTACHMENTS - ORDER AS DESIRED	
9000		iMatch Conversion Kit	353.00
9020		Front Anti-Scalping Roller	108.00
9030		Mulching Kit (GM1048E)	279.00
		ATTACHMENTS FOR FIELD CONVERSION	
		Miscellaneous:	
	5BP950959B	French Manual Decal (GM10E Series)	0.00
	5BP001600	Front Antiscalping Roller	108.69
	5BP004600	Mulching Kit (GM1048E)	279.49
	5BP006750	iMatch Conversion Kit *Fits GM1048E, GM1060E, and GM1072E. Must also order longer 5BP0500404 driveline from parts for GM1048E or GM1060E.*	345.94
	5BP006900	iMatch Conversion Kit (GM1048E)	353.55

GM1048E Economy Rear Discharge Grooming Mower
Continued

THIS PAGE IS INTENTIONALLY LEFT BLANK

GM1060E Economy Rear Discharge Grooming Mower

Equipment for Base Machine

4 Rubber Swivel Tires
11 Gauge Reinforced Deck
Spindle Shafts Greased from the
  Top for Easy Service
Single Belt Drive with
  Automatic Belt Idler
Rugged 30-HP Gearbox
One Piece Balanced Steel Pulleys
High Blade Speed
Floating Top Hitch
iMatch Compatible (Quick-Attach System)
Working Width: 60 In.
Overall Machine Width: 63 In.
Machine Weight: 375 lbs.
HP Requirements: 18 - 30 HP
Deck Thickness: 11 Gauge
Cutting Height from 1 In. to 4 In.
Category I Hitch
Blade Tip Speed:
  14,763 Ft./Minute
Type: Rear Discharge
Front Antiscalping Roller: Optional
Mulching Kit: Optional
Rotor RPM: 2,803 RPM
Driveline: 1-3/8 In. ASAE Category II
Shipping Weight: 470 lbs.
Set-up Time: 30 Minute
1 Year Warranty

CODE	ATTACHMENT IDENTIFIER	DESCRIPTION	SUGGESTED LIST PRICE USD ($)
		Select One Code From Each Required Category	
		BASE MACHINE	
0462XF		GM1060E Economy Rear Discharge Grooming Mower *iMatch kit sold separately.*	2,393.00
		ATTACHMENTS - ORDER AS DESIRED	
9000		iMatch Conversion Kit	353.00
9020		Front Anti-Scalping Roller	108.00
9030		Mulching Kit (GM1060E)	322.00
		ATTACHMENTS FOR FIELD CONVERSION	
		Miscellaneous:	
	5BP950959B	French Manual Decal (GM10E Series)	0.00
	5BP001600	Front Antiscalping Roller	108.69
	5BP005600	Mulching Kit (GM1060E)	322.26
	5BP006750	iMatch Conversion Kit *Fits GM1048E, GM1060E, and GM1072E. Must also order longer 5BP0500404 driveline from parts for GM1048E or GM1060E.*	345.94
	5BP006800	iMatch Conversion Kit (GM1060E)	353.55

GM1060E Economy Rear Discharge Grooming Mower
Continued

THIS PAGE IS INTENTIONALLY LEFT BLANK

GM1072E Economy Rear Discharge Grooming Mower

Equipment for Base Machine

4 Rubber Swivel Tires
11 Gauge Reinforced Deck
Spindle Shafts Greased from the
  Top for Easy Service
Single Belt Drive with
  Automatic Belt Idler
Rugged 30-HP Gearbox
One Piece Balanced Steel Pulleys
High Blade Speed
Floating Top Hitch
iMatch Compatible (Quick-Attach System)
Working Width: 72 In.
Overall Machine Width: 75 In.
Machine Weight: 440 lbs.
HP Requirements: 22 - 30 HP
Deck Thickness: 11 Gauge
Cutting Height from 1 In. to 4 In.
Category I Hitch
Blade Tip Speed:
  14,566 Ft./Minute
Type: Rear Discharge
Front Antiscalping Roller: Optional
Mulching Kit: Optional
Rotor RPM: 2,278 RPM
Driveline: 1-3/8 In. ASAE Category II
Shipping Weight: 540 lbs.
Set-up Time: 30 Minute
1 Year Warranty

CODE	ATTACHMENT IDENTIFIER	DESCRIPTION	SUGGESTED LIST PRICE USD ($)
		Select One Code From Each Required Category	
		BASE MACHINE	
0463XF		GM1072E Economy Rear Discharge Grooming Mower *iMatch kit sold separately.*	2,599.00
		ATTACHMENTS - ORDER AS DESIRED	
9000		iMatch Conversion Kit	346.00
9020		Front Anti-Scalping Roller	108.00
9030		Mulching Kit (GM1072E)	348.00
		ATTACHMENTS FOR FIELD CONVERSION	
		Miscellaneous:	
	5BP950959B	French Manual Decal (GM10E Series)	0.00
	5BP001600	Front Antiscalping Roller	108.69
	5BP006600	Mulching Kit (GM1072E)	348.83
	5BP006750	iMatch Conversion Kit *Fits GM1048E, GM1060E, and GM1072E. Must also order longer 5BP0500404 driveline from parts for GM1048E or GM1060E.*	345.94
	5BP006700	iMatch Conversion Kit (GM1072E)	345.94

GM1072E Economy Rear Discharge Grooming Mower
Continued

THIS PAGE IS INTENTIONALLY LEFT BLANK

GM1060R Rear Discharge Grooming Mower

Equipment for Base Machine

Tractor Horsepower: 15 to 40 HP
Type: Rear Discharge
Tractor PTO Speed: 540 RPM
Shipping Weight: 743 lbs.
Mower Deck Gearbox HP: 60 HP
Hitch: Category I
Gearbox Ratio: 1:1.92
Driveline: Category III
Drive Type: Gearbox Over V-Belt
Deck Thickness: 8 Gauge Steel Plate
Cutting Width: 60 In.
Cutting Height Range: 1 In. to 5 In.
Cutting Height Adjustment:
  Spacer On Caster
Caster Wheels:
  (4) 10 In. x 3-1/4 In. Solid
Caster Wheel Bearings: Roller Bearings
Blade Tip Speed: 18,100 FPM
Blade Spindles: 3 Cast Iron
Blade Spindle Bearings: Tapered Roller
Blade Overlap: 1-1/2 In.
Blade Dimensions:
  (3) 1/4 In. x 2-1/2 In.
Blade Composition:
  Heat-Treated Alloy Steel
Belts: B Section, Aramid/Kevlar
Belt Adjustment: Spring-Loaded Idler
Assembly/Set-Up Time:
  20 Minutes (Approximate)
Approximate Operating Weight: 611 lbs.
Front Roller Kit: Optional

CODE	ATTACHMENT IDENTIFIER	DESCRIPTION	SUGGESTED LIST PRICE USD ($)

Select One Code From Each Required Category

BASE MACHINE

0451XF		GM1060R Rear Discharge Grooming Mower	3,718.00

REAR CHAIN

2000		Rear Chain Shield	In Base Price
2095		Less Rear Chain Shield	-110.00

TIRES

3000		Pneumatic Tires	-36.00
3010		Solid Tires	In Base Price

ATTACHMENTS - ORDER AS DESIRED

9000		iMatch Conversion Kit *Excludes economy series.*	203.00
9010		Front Roller Kit *Contains 1 roller.*	91.00

ATTACHMENTS FOR FIELD CONVERSION

		Miscellaneous:	
	5WD1006417	Front Roller Kit - Contains 1 Roller (FM1012 Center Deck Only, FM1015 and FM1017 Fits all Decks, GM1060R, GM1072R and GM1084R)	101.92
	5WD55348	Rear Chain Shield Kit - Rear Discharge	137.76

GM1060R Rear Discharge Grooming Mower
Continued

CODE	ATTACHMENT IDENTIFIER	DESCRIPTION	SUGGESTED LIST PRICE USD ($)
		ATTACHMENTS FOR FIELD CONVERSION ...Continued...	
	5WD1005400	iMatch Conversion Kit *For GM10R Series.*	219.24

GM1072R Rear Discharge Grooming Mower

Equipment for Base Machine

Type: Rear Discharge
Tractor PTO Speed: 540 RPM
Tractor Horsepower: 20 to 40 HP
Shipping Weight: 806 lbs.
Mower Deck Gearbox HP: 60 HP
Hitch: Category I
Gearbox Ratio: 1:1.92
Driveline: Category III
Drive Type: Gearbox Over V-Belt
Deck Thickness: 8 Gauge Steel Plate
Cutting Width: 72 In.
Cutting Height Range: 1 In. to 5 In.
Cutting Height Adjustment:
  Spacer On Caster
Caster Wheels:
  (4) 10 In. x 3-1/4 In. Solid
Caster Wheel Bearings: Roller Bearings
Blade Tip Speed: 18,000 FPM
Blade Spindles: 3 Cast Iron
Blade Spindle Bearings: Tapered Roller
Blade Overlap: 1-1/2 In.
Blade Dimensions:
  (3) 1/4 In. x 2-1/2 In.
Blade Composition:
  Heat-Treated Alloy Steel
Belts: B Section, Aramid/Kevlar
Belt Adjustment: Spring-Loaded Idler
Assembly/Set-Up Time:
  20 Minutes (Approximate)
Approximate Operating Weight: 678 lbs.
Front Roller Kit: Optional

CODE	ATTACHMENT IDENTIFIER	DESCRIPTION	SUGGESTED LIST PRICE USD ($)

Select One Code From Each Required Category

BASE MACHINE

0453XF		GM1072R Rear Discharge Grooming Mower	3,889.00

REAR CHAIN

2000		Rear Chain Shield	In Base Price
2095		Less Rear Chain Shield	-122.00

TIRES

3000		Pneumatic Tires	-36.00
3010		Solid Tires	In Base Price

ATTACHMENTS - ORDER AS DESIRED

9000		iMatch Conversion Kit *Excludes economy series.*	203.00
9010		Front Roller Kit *Contains 1 roller.*	91.00

ATTACHMENTS FOR FIELD CONVERSION

		Miscellaneous:	
	5WD1006417	Front Roller Kit - Contains 1 Roller (FM1012 Center Deck Only, FM1015 and FM1017 Fits all Decks, GM1060R, GM1072R and GM1084R)	101.92
	5WD53566	Rear Chain Shield Kit - Rear Discharge	141.12

GM1072R Rear Discharge Grooming Mower
Continued

CODE	ATTACHMENT IDENTIFIER	DESCRIPTION	SUGGESTED LIST PRICE USD ($)
		ATTACHMENTS FOR FIELD CONVERSION ...Continued...	
	5WD1005400	iMatch Conversion Kit *For GM10R Series.*	219.24

GM1084R Rear Discharge Grooming Mower

Equipment for Base Machine

Type: Rear Discharge
Tractor PTO Speed: 540 RPM
Tractor Horsepower: 25 to 40 HP
Shipping Weight: 991 lbs.
Mower Deck Gearbox HP: 60 HP
Hitch: Category I
Gearbox Ratio: 1:1.92
Driveline: Category III
Drive Type: Gearbox Over V-Belt
Deck Thickness: 8 Gauge Steel Plate
Cutting Width: 84 In.
Cutting Height Range:
  1 In. to 4-1/2 In.
Cutting Height Adjustment:
  Spacer On Caster
Caster Wheels:
  (4) 10 In. x 3-1/4 In. Solid
Caster Wheel Bearings: Roller Bearings
Blade Tip Speed: 17,900 FPM
Blade Spindles: 3 Cast Iron
Blade Spindle Bearings: Tapered Roller
Blade Overlap: 2 In.
Blade Dimensions:
  (3) 5/16 In. x 2-1/2 In.
Blade Composition:
  Heat-Treated Alloy Steel
Belts: B Section, Aramid/Kevlar
Belt Adjustment: Spring-Loaded Idler
Assembly/Set-Up Time:
  20 Minutes (Approximate)
Approximate Operating Weight: 774 lbs.
Front Roller Kit: Optional

CODE	ATTACHMENT IDENTIFIER	DESCRIPTION	SUGGESTED LIST PRICE USD ($)

Select One Code From Each Required Category

BASE MACHINE

0455XF		GM1084R Rear Discharge Grooming Mower	4,520.00

REAR CHAIN

2000		Rear Chain Shield	In Base Price
2095		Less Rear Chain Shield	-146.00

TIRES

3000		Pneumatic Tires	-36.00
3010		Solid Tires	In Base Price

ATTACHMENTS - ORDER AS DESIRED

9000		iMatch Conversion Kit *Excludes economy series.*	203.00
9010		Front Roller Kit *Contains 1 roller.*	91.00

ATTACHMENTS FOR FIELD CONVERSION

		Miscellaneous:	
	5WD1006417	Front Roller Kit - Contains 1 Roller (FM1012 Center Deck Only, FM1015 and FM1017 Fits all Decks, GM1060R, GM1072R and GM1084R)	101.92
	5WD52856	Rear Chain Shield Kit - Rear Discharge (GM1084)	162.00

GM1084R Rear Discharge Grooming Mower
Continued

CODE	ATTACHMENT IDENTIFIER	DESCRIPTION	SUGGESTED LIST PRICE USD ($)
		ATTACHMENTS FOR FIELD CONVERSION ...Continued...	
	5WD1005400	iMatch Conversion Kit *For GM10R Series.*	219.24

GM1190R Rear Discharge Grooming Mower with Chain Shield

Equipment for Base Machine

Type: Rear Discharge
Tractor PTO Speed: 540 RPM
Tractor Horsepower: 25 to 50 HP
Shipping Weight: 1347 lbs.
Mower Deck Gearbox HP: 50 HP
Hitch: Category I
Gearbox Ratio: 1:1.69
Driveline: Category IV
Drive Type: Gearbox Over (2) V-Belts
Deck Thickness: 7 Gauge Steel Plate
Cutting Width: 90 In.
Cutting Height Range:
  1-1/2 In. to 8 In.
Cutting Height Adjustment:
  Adjustable Arm
Caster Wheels:
  (4) 13 In. x 5 In. Solid
Caster Wheel Bearings:
  Tapered Roller Bearings
Blade Tip Speed: 15,570 FPM

Blade Spindles: 3 Cast Iron
Blade Spindle Bearings: Tapered Roller
Blade Overlap: 1-1/4 In.
Blade Dimensions:
  (6) 1/4 In. x 2-1/2 In.
Blade Composition:
  Heat-Treated Alloy Steel
Belts: Power Band, B Section, Kevlar
Belt Adjustment: Spring-Loaded Idler
Assembly/Set-Up Time:
  45 Minutes (Approximate)
Approximate Operating Weight: 1,200 lbs.
Front Center Roller Kit: Optional

CODE	ATTACHMENT IDENTIFIER	DESCRIPTION	SUGGESTED LIST PRICE USD ($)
		Select One Code From Each Required Category	
		BASE MACHINE	
0471XF		GM1190R Rear Discharge Grooming Mower with Chain Shield	6,210.00
		TIRES	
3000		Pneumatic Tires	Same Price
3010		Solid Tires	In Base Price
		ATTACHMENTS - ORDER AS DESIRED	
9000		iMatch Conversion Kit *Excludes economy series.*	186.00
9010		Front Roller Kit *Contains 1 roller.*	129.00
		ATTACHMENTS FOR FIELD CONVERSION	
		Miscellaneous:	
	5WD24650	Front Roller Kit - Contains 1 Roller (GM1190) *Serial Number 1XFGM11XKB0000120 and below.*	143.36
	5WD1032828	Front Roller Kit - Contains 1 Roller (GM1190) *Serial Number 1XFGM11XKB0000121 and above.*	144.48
	5WD1005400	iMatch Conversion Kit *For GM1190R. Serial Number 1XFGM11XKB0000120 and below.*	219.24
	5WD1032830	iMatch Conversion Kit *For GM1190R. Serial Number 1XFGM11XKB0000121 and above.*	200.88

GM1190R Rear Discharge Grooming Mower with Chain Shield
Continued

GM2060R Rear Discharge Grooming Mower with Rear Chain Shields

Equipment for Base Machine

High Blade Speed
iMatch Compatible (Quick-Attach System)
4 Swivel Tires - Solid or Pneumatic
Spindle Shafts Greased from the
  Top for Easy Service
20 to 50 HP
Type: Rear Discharge
Tractor PTO Speed: 540 RPM
Shipping Weight: 609 lbs.
Mower Deck Gearbox HP: 50 HP
Hitch: Category I
Gearbox Ratio: 1:3:09 (Spiral Gears)
Driveline:
  1-3/8 In. ASAE Category III
Drive Type: Gear Box over V/Belt
Deck Thickness:
  8 Gauge Reinforced Deck
Cutting Width: 60 In.
Cutting Height Range: 1 In. to 5 In.
Cutting Height Adjustment:
  Spacer On Caster
Caster Wheels:
  (4) 10 In. x 3.2 In. Solid or
  11 In. x 4 In. (4 Ply, with
  Tubes) Pneumatic
Caster Wheel Bearings:
  Caged Roller Needle Bearings
Blade Tip Speed: 16,929 FPM
Blade Spindles: 3 Cast Iron
Blade Spindle Bearings:
  Shielded Ball Bearings (2) Per Spindle
Blade Composition:
  Heat-Treated Alloy Steel
Blade Overlap: 1-1/8 In.
Blade Dimensions:
  (3) 20-3/16 In. x 2 In. x 1/4 In.
Belts: B-Section, Polyester/Cogged
Belt Adjustment: Single Point,
  Slotted Track Adjustment - No Idlers
Front Roller Kit: Optional
Assembly/Set-Up Time:
  30 Minutes (Approximate)
Approximate Operating Weight: 550 lbs.
Mulching Kit Available
1 Year Warranty

CODE	ATTACHMENT IDENTIFIER	DESCRIPTION	SUGGESTED LIST PRICE USD ($)
		Select One Code From Each Required Category	
		BASE MACHINE	
0481XF		GM2060R Rear Discharge Grooming Mower with Rear Chain Shields *iMatch kit sold separately.*	3,176.00
		TIRES	
1000		Solid Gauge Wheel Tires	In Base Price
1010		Pneumatic Gauge Wheel Tires	65.00
		ATTACHMENTS - ORDER AS DESIRED	
9000		Front Anti-Scalping Roller	122.00
9010		I-Match Conversion Kit	316.00
9020		Mulching Kit (GM2060)	322.00
		ATTACHMENTS FOR FIELD CONVERSION	
		Miscellaneous:	
	5BP0099915	Front Antiscalping Roller	122.42
	5BP045700	Mulching Kit (GM2060)	322.26
	5BP002800	iMatch Conversion Kit	316.28

GM2060R Rear Discharge Grooming Mower with Rear Chain Shields
Continued

GM2072R Rear Discharge Grooming Mower with Rear Chain Shields

Equipment for Base Machine

Spindle Shafts Greased from the
  Top for Easy Service
iMatch Compatible (Quick-Attach System)
4 Swivel Tires - Solid or Pneumatic
Type: Rear Discharge
Tractor PTO Speed: 540 RPM
Tractor Horsepower: 20 to 50 HP
Shipping Weight: 676 lbs.
Mower Deck Gearbox HP: 50 HP
Hitch: Category I
Gearbox Ratio: 1:3:09 (Spiral Gears)
Driveline: Category III
Drive Type: Gearbox Over V-Belt
Deck Thickness: 8 Gauge Steel Plate
Cutting Width: 72 In.
Cutting Height Range: 1 In. to 5 In.
Cutting Height Adjustment:
  Spacer on Caster
Caster Wheels:
  (4) 10 In. x 3.2 In. Solid or
  11 In. x 4 In. (4 Ply, with
  Tubes) Pneumatic
Caster Wheel Bearings:
  Caged Roller Needle Bearings
Blade Tip Speed: 16,732 FPM
Blade Spindles: 3 Cast Iron
Blade Spindle Bearings:
  Shielded Ball Bearings (2) Per Spindle
Blade Composition:
  Heat-Treated Alloy Steel
Blade Overlap: 1-1/8 In.
Blade Dimensions:
  (3) 24-1/2 In. x 2-1/4 In. x 1/4 In.
Belts: B-Section, Polyester/Cogged
Belt Adjustment: Single Point,
  Slotted Track Adjustment - No Idlers
Front Roller Kit: Optional
Assembly/Set-Up Time:
  30 Minutes (Approximate)
Approximate Operating Weight: 600 lbs.
Mulching Kit Available
1 Year Warranty

CODE	ATTACHMENT IDENTIFIER	DESCRIPTION	SUGGESTED LIST PRICE USD ($)

Select One Code From Each Required Category

BASE MACHINE

0482XF		GM2072R Rear Discharge Grooming Mower with Rear Chain Shields *iMatch kit sold separately.*	3,431.00

TIRES

1000		Solid Gauge Wheel Tires	In Base Price
1010		Pneumatic Gauge Wheel Tires	65.00

ATTACHMENTS - ORDER AS DESIRED

9000		Front Anti-Scalping Roller	122.00
9010		I-Match Conversion Kit	316.00
9020		Mulching Kit (GM2072)	373.00

ATTACHMENTS FOR FIELD CONVERSION

		Miscellaneous:	
	5BP0099915	Front Antiscalping Roller	122.42
	5BP046700	Mulching Kit (GM2072)	373.32
	5BP002800	iMatch Conversion Kit	316.28

GM2072R Rear Discharge Grooming Mower with Rear Chain Shields
Continued

THIS PAGE IS INTENTIONALLY LEFT BLANK

GM2084R Rear Discharge Grooming Mower with Rear Chain Shields and Front Antiscalping Roller

Equipment for Base Machine

Three High-Suction Blades Standard
iMatch Compatible (Quick-Attach System)
4 Swivel Tires - Solid or Pneumatic
Spindle Shafts Greased from the
  Top for Easy Service
Type: Rear Discharge
Tractor PTO Speed: 540 RPM
Tractor Horsepower: 25 to 50 HP
Shipping Weight: 769 lbs.
Mower Deck HP: 50 HP
Hitch: Category I
Gearbox Ratio: 1:3:09 (Spiral Gears)
Driveline:
  1-3/8 In. ASAE Category III
Drive Type: Gearbox Over V/Belt
Deck Thickness:
  8 Gauge Reinforced Deck
Cutting Width: 84 In.
Cutting Height Range: 1 In. to 5 In.
Cutting Height Adjustment:
  Spacer On Caster
Caster Wheels:
  (4) 10 In. x 3.2 In. Solid or
  11 In. x 4 In. (4 Ply, with
  Tubes) Pneumatic
Caster Wheel Bearings:
  Caged Roller Needle Bearings
Blade Tip Speed: 16,338 FPM
Blade Spindles: 3 Cast Iron
Blade Spindle Bearings:
  Shielded Ball Bearings (2) Per Spindle
Blade Composition:
  Heat-Treated Alloy Steel
Blade Overlap: 1-1/2 In.
Blade Dimensions:
  (3) 28-1/2 In. x 2-1/4 In.
Belts: B-Section, Polyester/Cogged
Belt Adjustment: Single Point,
  Slotted Track Adjustment - No Idlers
Front Roller Kit: Standard
Assembly/Set-Up Time:
  30 Minutes (Approximate)
Approximate Operating Weight: 690 lbs.
Mulching Kit Available
1 Year Warranty

CODE	ATTACHMENT IDENTIFIER	DESCRIPTION	SUGGESTED LIST PRICE USD ($)

Select One Code From Each Required Category

BASE MACHINE

0483XF		GM2084R Rear Discharge Grooming Mower with Rear Chain Shields and Front Antiscalping Roller *iMatch kit sold separately.*	4,055.00

TIRES

1000		Solid Gauge Wheel Tires	In Base Price
1010		Pneumatic Gauge Wheel Tires	65.00

ATTACHMENTS - ORDER AS DESIRED

9010		I-Match Conversion Kit	316.00
9020		Mulching Kit (GM2084)	435.00

ATTACHMENTS FOR FIELD CONVERSION

		Miscellaneous:	
	5BP047700	Mulching Kit (GM2084)	435.65
	5BP002800	iMatch Conversion Kit	316.28

GM2084R Rear Discharge Grooming Mower with Rear Chain Shields and Front Antiscalping Roller
Continued

THIS PAGE IS INTENTIONALLY LEFT BLANK

GM2190R Rear Discharge Grooming Mower with Rear Chain Shields and Front Antiscalping Roller

Equipment for Base Machine

Free Swinging Kick Back Blades
Double Belt Drive with No Idler
One Piece Balanced Steel Pulleys
iMatch Compatible (Quick-Attach System)
4 Swivel Tires - Solid or Pneumatic
Type: Rear Discharge
Tractor PTO Speed: 540 RPM
Tractor Horsepower: 30 to 70 HP
Shipping Weight: 1198 lbs.
Mower Deck Gearbox HP: 70 HP
Hitch: Category I
Gearbox Ratio: 1:2:08
Driveline:
  1-3/8 In. ASAE Category IIII
Drive Type: Gearbox Over V/Belt
Deck Thickness:
  8 Gauge Reinforced Deck
Cutting Width: 90 In.
Cutting Height Range:
  From 1.3 In. to 5.3 In.
Cutting Height Adjustment:
  Spacer On Caster
Caster Wheels:
  (4) 12 In. x 4 In. Solid or
  13 In. x 6.5 In. (4 Ply, with
  Tubes) Air
Caster Wheel Bearings:
  Caged Roller Needle Bearings
Blade Tip Speed: 14,106 FPM
Blade Spindles: (3) Cast Iron
Blade Spindle Bearings:
  Shielded Ball Bearings (2) Per Spindle
Blade Composition:
  Heat-Treated Alloy Steel
Blade Overlap: 1-3/8 In.
Blade Dimensions:
  (6) 13 In. x 2-3/4 In. x 1/4 In.
Belts: 5VX, Polyester/Cogged
Belt Adjustment: Single Point,
  Slotted Track Adjustment - No Idlers
Assembly/Set-Up Time:
  30 Minutes (Approximate)
Approximate Operating Weight: 1102 lbs.
Front Center Roller Kit: Standard
1 Year Warranty

CODE	ATTACHMENT IDENTIFIER	DESCRIPTION	SUGGESTED LIST PRICE USD ($)
		Select One Code From Each Required Category	
		BASE MACHINE	
0492XF		GM2190R Rear Discharge Grooming Mower with Rear Chain Shields and Front Antiscalping Roller *iMatch kit sold separately.*	6,109.00
		TIRES	
1000		Solid Gauge Wheel Tires	In Base Price
1010		Pneumatic Gauge Wheel Tires	151.00
		ATTACHMENTS - ORDER AS DESIRED	
9010		I-Match Conversion Kit	316.00
		ATTACHMENTS FOR FIELD CONVERSION	
		Miscellaneous:	
	5BP002800	iMatch Conversion Kit	316.28

GM2190R Rear Discharge Grooming Mower with Rear Chain Shields and Front Antiscalping Roller
Continued

THIS PAGE IS INTENTIONALLY LEFT BLANK

GM2109R Rear Discharge Grooming Mower with Rear Chain Shields and Front Antiscalping Roller

Equipment for Base Machine

Free Swinging Kick Back Blades
Double Belt Drive with No Idler
One Piece Balanced Steel Pulleys
iMatch Compatible (Quick-Attach System)
4 Swivel Tires - Solid or Pneumatic
Type: Rear Discharge
Tractor PTO Speed: 540 RPM
Tractor Horsepower: 30 to 70 HP
Shipping Weight: 1608 lbs.
Mower Deck Gearbox HP: 70 HP
Hitch: Category I
Gearbox Ratio: 1:2:08
Driveline:
  1-3/8 In. ASAE Category IIII
Drive Type: Gearbox Over V/Belt
Deck Thickness:
  8 Gauge Reinforced Deck
Cutting Width: 110 In.
Cutting Height Range:
  From 1.3 In. to 5.3 In.
Cutting Height Adjustment:
  Spacer On Caster
Caster Wheels:
  (4) 12 In. x 4 In. Solid or
  13 In. x 6.5 In. (4 Ply, with
  Tubes) Air
Caster Wheel Bearings:
  Caged Roller Needle Bearings
Blade Tip Speed: 14,954 FPM
Blade Spindles: (3) Cast Iron
Blade Spindle Bearings:
  Shielded Ball Bearings (2) Per Spindle
Blade Composition:
  Heat-Treated Alloy Steel
Blade Overlap: 1-1/8 In.
Blade Dimensions:
  (6) 15-7/8 In. x 2-3/4 In. x 1/4 In.
Belts: 5VX, Polyester/Cogged
Belt Adjustment: Single Point,
  Slotted Track Adjustment - No Idlers
Assembly/Set-Up Time:
  30 Minutes (Approximate)
Approximate Operating Weight: 1490 lbs.
Front Center Roller Kit: Standard
1 Year Warranty

CODE	ATTACHMENT IDENTIFIER	DESCRIPTION	SUGGESTED LIST PRICE USD ($)
		Select One Code From Each Required Category	
		BASE MACHINE	
0491XF		GM2109R Rear Discharge Grooming Mower with Rear Chain Shields and Front Antiscalping Roller *iMatch kit sold separately.*	7,140.00
		TIRES	
1000		Solid Gauge Wheel Tires	In Base Price
1010		Pneumatic Gauge Wheel Tires	151.00
		ATTACHMENTS - ORDER AS DESIRED	
9010		I-Match Conversion Kit	316.00
		ATTACHMENTS FOR FIELD CONVERSION	
		Miscellaneous:	
	5BP002800	iMatch Conversion Kit	316.28

GM2109R Rear Discharge Grooming Mower with Rear Chain Shields and Front Antiscalping Roller
Continued

THIS PAGE IS INTENTIONALLY LEFT BLANK

GM3054 Rear Discharge Economy Grooming Mower

Equipment for Base Machine

Tractor Horsepower: 15 to 25 HP
Type: Rear Discharge
Tractor PTO Speed: 540 RPM
Shipping Weight: 478 lbs.
Mower Deck Gearbox HP: 25 HP
Hitch: Limited Category I
Gearbox Ratio: 1:2.5
Driveline: Category III
Drive Type: Gearbox Over V-Belt
Deck Thickness: 10 Gauge Steel Plate
Cutting Width: 54 In.
Cutting Height Range: 1 In. to 4.5 In.
Cutting Height Adjustment:
  Spacer On Caster
Caster Wheels:
  (4) 10 In. x 3-1/4 In. Solid
Caster Wheel Bearings: Roller Bearings
Blade Tip Speed: 16,200 FPM

Blade Spindles: 3 Cast Iron
Blade Spindle Bearings: Ball Bearings
Blade Overlap: 1 In.
Blade Dimensions:
  (3) 1/4 In. x 2-1/2 In.
Blade Composition:
  Heat-Treated Alloy Steel
Belts: B Section, Aramid/Kevlar
Belt Adjustment: Spring-Loaded Idler
Assembly/Set-Up Time:
  15 Minutes (Approximate)
Front Roller Kit: Optional

CODE	ATTACHMENT IDENTIFIER	DESCRIPTION	SUGGESTED LIST PRICE USD ($)
		Select One Code From Each Required Category	
		BASE MACHINE	
0531XF		GM3054 Rear Discharge Economy Grooming Mower	2,678.00
		REAR CHAIN	
2000		Rear Chain Shield	In Base Price
2095		Less Rear Chain Shield	-94.00
		TIRES	
3000		Pneumatic Tires	-58.00
3010		Solid Tires	In Base Price
		ATTACHMENTS - ORDER AS DESIRED	
9010		Front Roller Kit *Contains 1 roller.*	78.00
		ATTACHMENTS FOR FIELD CONVERSION	
		Miscellaneous:	
	5WD1008035	Front Roller Kit - Contains 1 Roller (GM30 Series)	87.36
	5WD1008038	Rear Chain Shield Kit - Rear Discharge (GM3054 & FM3012)	106.40

GM3054 Rear Discharge Economy Grooming Mower
Continued

THIS PAGE IS INTENTIONALLY LEFT BLANK

GM3060 Rear Discharge Economy Grooming Mower

Equipment for Base Machine

Tractor Horsepower: 15 to 35 HP
Type: Rear Discharge
Tractor PTO Speed: 540 RPM
Shipping Weight: 589 lbs.
Mower Deck Gearbox HP: 35 HP
Hitch: Category I
Gearbox Ratio: 1:1.92
Driveline: Category III
Drive Type: Gearbox Over V-Belt
Deck Thickness: 8 Gauge Steel Plate
Cutting Width: 60 In.
Cutting Height Range: 1 In. to 4.5 In.
Cutting Height Adjustment:
  Spacer On Caster
Caster Wheels:
  (4) 10 In. x 3-1/4 In. Solid
Caster Wheel Bearings: Roller Bearings
Blade Tip Speed: 18,030 FPM
Blade Spindles: 3 Cast Iron
Blade Spindle Bearings: Ball Bearings
Blade Overlap: 1-1/2 In.
Blade Dimensions:
  (3) 1/4 In. x 2-1/2 In.
Blade Composition:
  Heat-Treated Alloy Steel
Belts: B Section, Aramid/Kevlar
Belt Adjustment: Spring-Loaded Idler
Assembly/Set-Up Time:
  15 Minutes (Approximate)
Approximate Operating Weight: 503 lbs.
Front Roller Kit: Optional

CODE	ATTACHMENT IDENTIFIER	DESCRIPTION	SUGGESTED LIST PRICE USD ($)

Select One Code From Each Required Category

BASE MACHINE

0532XF		GM3060 Rear Discharge Economy Grooming Mower	2,831.00

REAR CHAIN

2000		Rear Chain Shield	In Base Price
2095		Less Rear Chain Shield	-105.00

TIRES

3000		Pneumatic Tires	-58.00
3010		Solid Tires	In Base Price

ATTACHMENTS - ORDER AS DESIRED

9000		iMatch Conversion Kit *Excludes economy series.*	203.00
9010		Front Roller Kit *Contains 1 roller.*	78.00

ATTACHMENTS FOR FIELD CONVERSION

		Miscellaneous:	
	5WD1008035	Front Roller Kit - Contains 1 Roller (GM30 Series)	87.36
	5WD55348	Rear Chain Shield Kit - Rear Discharge	137.76
	5WD1005400	iMatch Conversion Kit *For GM3060 and GM3072.*	219.24

GM3060 Rear Discharge Economy Grooming Mower
Continued

GM3072 Rear Discharge Economy Grooming Mower

Equipment for Base Machine

Tractor Horsepower: 20 to 35 HP
Type: Rear Discharge
Tractor PTO Speed: 540 RPM
Shipping Weight: 689 lbs.
Mower Deck Gearbox HP: 35 HP
Hitch: Category I
Gearbox Ratio: 1:1.92
Driveline: Category III
Drive Type: Gearbox Over V-Belt
Deck Thickness: 8 Gauge Steel Plate
Cutting Width: 72 In.
Cutting Height Range: 1 In. to 4.5 In.
Cutting Height Adjustment:
  Spacer On Caster
Caster Wheels:
  (4) 10 In. x 3-1/4 In. Solid
Caster Wheel Bearings: Roller Bearings
Blade Tip Speed: 18,000 FPM
Blade Spindles: 3 Cast Iron
Blade Spindle Bearings: Ball Bearings
Blade Overlap: 1 1/2 In.
Blade Dimensions:
  (3) 1/4 In. x 2-1/2 In.
Blade Composition:
  Heat-Treated Alloy Steel
Belts: B Section, Aramid/Kevlar
Belt Adjustment: Spring-Loaded Idler
Assembly/Set-Up Time:
  15 Minutes (Approximate)
Approximate Operating Weight: 603 lbs.
Front Roller Kit: Optional

CODE	ATTACHMENT IDENTIFIER	DESCRIPTION	SUGGESTED LIST PRICE USD ($)

Select One Code From Each Required Category

BASE MACHINE

0533XF		GM3072 Rear Discharge Economy Grooming Mower	3,065.00

REAR CHAIN

2000		Rear Chain Shield	In Base Price
2095		Less Rear Chain Shield	-122.00

TIRES

3000		Pneumatic Tires	-58.00
3010		Solid Tires	In Base Price

ATTACHMENTS - ORDER AS DESIRED

9000		iMatch Conversion Kit *Excludes economy series.*	203.00
9010		Front Roller Kit *Contains 1 roller.*	78.00

ATTACHMENTS FOR FIELD CONVERSION

		Miscellaneous:	
	5WD1008035	Front Roller Kit - Contains 1 Roller (GM30 Series)	87.36
	5WD53566	Rear Chain Shield Kit - Rear Discharge	141.12
	5WD1005400	iMatch Conversion Kit *For GM3060 and GM3072.*	219.24

GM3072 Rear Discharge Economy Grooming Mower
Continued

BG1000 - Manual Bedknife Grinder - Stationary Grind Motor

Equipment for Base Machine

```
Power:
  115 Volt AC, 50 or 60 Hz 15 Amp Circuit
Grind Motor:
  1/2 HP Totally Enclosed
  3450 rpm
White Vitrified Grinding Wheel
Manual Dressing Brick
Steel Fabricated Frame with Tool Tray
Carriage Includes Supports with Centers
Precision Ground, Hard-Chromed, 1.75" Diameter
  Steel Rails for Smooth Bed Knife Carriage Travel
Rails are Rotatable for Longer Life
```

```
Machine Dimensions:
  Depth = 24"
  Width = 84"
  Height = 62"
  Weight = 310 lbs
Setup Time =  2 Hrs
```

CODE	ATTACHMENT IDENTIFIER	DESCRIPTION	SUGGESTED LIST PRICE USD ($)

Select One Code From Each Required Category

BASE MACHINE

1701XF	BG1000 - Manual Bedknife Grinder - Stationary Grind Motor	5,465.00

BG1000 - Manual Bedknife Grinder - Stationary Grind Motor
Continued

THIS PAGE IS INTENTIONALLY LEFT BLANK

BG1500 - Semi-Automatic Bedknife Grinder - Automatic Travel, Manual Infeed

Equipment for Base Machine

```
Power:
  115 Volt AC, 50 or 60 Hz 15 Amp Circuit
Grind Motor:
  3/4 HP Totally Enclosed
  3450 rpm
Grinding Wheel:
  Borzon 6" OD X 1-1/4" ID X 2" Thick X 1/2" face
Grinding Carriage Mounted Diamond Dresser
Partially Enclosed Cabinet
Carriage Moves on Precision Ground Round Rails
Magnetic Mount for Bedknife
Travel, Automatic Variable Speed
Adjustable Carriage Travel Lengths
Flood Coolant System
Machine Dimensions:
  Depth = 32"
  Width = 61"
  Height = 58"
  Weight = 730 lbs
Setup Time =  1 Hr
```

CODE	ATTACHMENT IDENTIFIER	DESCRIPTION	SUGGESTED LIST PRICE USD ($)

Select One Code From Each Required Category

BASE MACHINE

1711XF	BG1500 - Semi-Automatic Bedknife Grinder - Automatic Travel, Manual Infeed	15,680.00

BG1500 - Semi-Automatic Bedknife Grinder - Automatic Travel, Manual Infeed
Continued

THIS PAGE IS INTENTIONALLY LEFT BLANK

RG5000 - Manual Spin and Relief Reel Grinder

Equipment for Base Machine

```
Power:
  115 Volt AC, 50 or 60 Hz 15 Amp Circuit
Grind Motor:
  1 HP Totally Enclosed
  3450 rpm
Spin Motor:
  1/5 HP DC  variable speed
  50-350 rpm
Travel Motor:
  1/20 HP DC  variable speed
  0-34 rpm
Spin Grinding Wheel:
  Resinoid 6" OD X 1/2" ID X 1" Face
Relief Grinding Wheel:
  Resinoid 6" OD X 1/2" ID X 3/8" Face
Manual Dressing Brick
Auto-Index Relief Assembly
Magnetic Mount for Bedknife
Steel Fabricated Frame
Dial Indicator Alignment Gauge
Grinding Carriage Travels on
  Precision Ground Round Rails
Machine Dimensions:
  Depth = 42"
  Width = 67"
  Height = 83"
  Weight = 790 lbs
Setup Time =  2 Hrs
```

CODE	ATTACHMENT IDENTIFIER	DESCRIPTION	SUGGESTED LIST PRICE USD ($)
		Select One Code From Each Required Category	
		BASE MACHINE	
1721XF		RG5000 - Manual Spin and Relief Reel Grinder	16,735.00
		ATTACHMENTS - ORDER AS DESIRED	
9523		RG5000 Pull Gang Mounting Kit	530.00
9524		RG5000 Walking Greens Mower Kit	130.00
		ATTACHMENTS FOR FIELD CONVERSION	
		Miscellaneous:	
	5NT18574	RG5000 Pull Gang Mounting Kit	572.40
	5NT6000550	RG5000 Walking Greens Mower Kit	145.60

RG5000 - Manual Spin and Relief Reel Grinder
Continued

THIS PAGE IS INTENTIONALLY LEFT BLANK

RG5500 - Semi-Automatic Spin and Relief Reel Grinder

Equipment for Base Machine

```
Power:
  115 Volt AC, 50 or 60 Hz 20 Amp Circuit
Grind Motor:
  1 HP Totally Enclosed
  3450 rpm
Spin Motor:
  1/5 HP DC  variable speed
  0-350 rpm
Travel Motor:
  1/20 HP DC  variable speed
  0-34 rpm
Spin Grinding Wheel:
  Resinoid 6" OD X 1/2" ID X 1" Face
Relief Grinding Wheel:
  Resenoid 6" OD X 1/2" ID X 3/8" Face
Manual Diamond Dresser
Digital Indicator Alignment System
Multi-Position Brackets
Front Roller Mounts
Wheel Wrench
Steel Fabricated Frame
Grinding Wheel Hubs Travel on a
  Precision Ground Alloy Steel Drive Shaft
Travel Length and Speed are Adjustable
Quick and Easy Setup with Table Top Style
Auto-Index Relief Grinding is Adjustable
  to Factory Recommendations
Patented Auto Index System Assures Quick Set Up
Machine Dimensions:
  Depth = 45"
  Width = 71"
  Height = 70"
  Weight = 1200 lbs
Setup Time =  1 Hr
```

CODE	ATTACHMENT IDENTIFIER	DESCRIPTION	SUGGESTED LIST PRICE USD ($)
		Select One Code From Each Required Category	
		BASE MACHINE	
1731XF		RG5500 - Semi-Automatic Spin and Relief Reel Grinder	26,825.00
		REEL LIFT OPTIONS	
2095		No Lift	In Base Price
2010		Boom & Manual Hoist	1,315.00
2020		Boom & Electric Winch	2,550.00
2030		Platform Lift System - 115 VAC	5,295.00
		ATTACHMENTS - ORDER AS DESIRED	
9520		RG5500 Boom & Manual Hoist	1,315.00
9521		RG5500 Boom & Electric Winch	2,550.00
9522		RG5500 Platform Lift System - 115 VAC	5,295.00
		ATTACHMENTS FOR FIELD CONVERSION	
		Miscellaneous:	
	5NT16210901	RG5500 Boom & Electric Winch	2,754.00
	5NT16210902	RG5500 Boom & Electric Winch (French)	2,754.00
	5NT16200901	RG5500 Boom & Manual Hoist	1,420.20
	5NT16200902	RG5500 Boom & Manual Hoist (French)	1,420.20

RG5500 - Semi-Automatic Spin and Relief Reel Grinder
Continued

CODE	ATTACHMENT IDENTIFIER	DESCRIPTION	SUGGESTED LIST PRICE USD ($)
		ATTACHMENTS FOR FIELD CONVERSION ...Continued...	
	5NT16220901	RG5500 Platform Lift System - 115 VAC	5,718.60
	5NT16220902	RG5500 Platform Lift System - 115 VAC (French)	5,718.60

RG5000 - Manual Spin and Relief Reel Grinder - Unpublished

CODE	ATTACHMENT IDENTIFIER	DESCRIPTION	SUGGESTED LIST PRICE USD ($)

THIS PAGE IS INTENTIONALLY LEFT BLANK

BG1000 - Manual Bedknife Grinder - Stationary Grind Motor - Quebec

Equipment for Base Machine

```
Power:
  115 Volt AC, 50 or 60 Hz 15 Amp Circuit
Grind Motor:
  1/2 HP Totally Enclosed
  3450 rpm
White Vitrified Grinding Wheel
Manual Dressing Brick
Steel Fabricated Frame with Tool Tray
Carriage Includes Supports with Centers
Precision Ground, Hard-Chromed, 1.75" Diameter
  Steel Rails for Smooth Bed Knife Carriage Travel
Rails are Rotatable for Longer Life
```

```
Machine Dimensions:
  Depth = 24"
  Width = 84"
  Height = 62"
  Weight = 310 lbs
Setup Time =  2 Hrs
```

CODE	ATTACHMENT IDENTIFIER	DESCRIPTION	SUGGESTED LIST PRICE USD ($)

Select One Code From Each Required Category

BASE MACHINE

170AXF	BG1000 - Manual Bedknife Grinder - Stationary Grind Motor - Quebec	5,465.00

BG1000 - Manual Bedknife Grinder - Stationary Grind Motor - Quebec
Continued

THIS PAGE IS INTENTIONALLY LEFT BLANK

BG1500 - Semi-Automatic Bedknife Grinder - Automatic Travel, Manual Infeed - Quebec

Equipment for Base Machine

```
Power:
  115 Volt AC, 50 or 60 Hz 15 Amp Circuit
Grind Motor:
  3/4 HP Totally Enclosed
  3450 rpm
Grinding Wheel:
  Borzon 6" OD X 1-1/4" ID X 2" Thick X 1/2" face
Grinding Carriage Mounted Diamond Dresser
Partially Enclosed Cabinet
Carriage Moves on Precision Ground Round Rails
Magnetic Mount for Bedknife
Travel, Automatic Variable Speed
Adjustable Carriage Travel Lengths
Flood Coolant System
Machine Dimensions:
  Depth = 32"
  Width = 61"
  Height = 58"
  Weight = 730 lbs
Setup Time =  1 Hr
```

CODE	ATTACHMENT IDENTIFIER	DESCRIPTION	SUGGESTED LIST PRICE USD ($)

Select One Code From Each Required Category

BASE MACHINE

171AXF	BG1500 - Semi-Automatic Bedknife Grinder - Automatic Travel, Manual Infeed - Quebec	15,680.00

THIS PAGE IS INTENTIONALLY LEFT BLANK

RG5000 - Manual Spin and Relief Reel Grinder - Quebec

Equipment for Base Machine

```
Power:
  115 Volt AC, 50 or 60 Hz 15 Amp Circuit
Grind Motor:
  1 HP Totally Enclosed
  3450 rpm
Spin Motor:
  1/5 HP DC  variable speed
  50-350 rpm
Travel Motor:
  1/20 HP DC  variable speed
  0-34 rpm
Spin Grinding Wheel:
  Resinoid 6" OD X 1/2" ID X 1" Face
Relief Grinding Wheel:
  Resinoid 6" OD X 1/2" ID X 3/8" Face
Manual Dressing Brick
Auto-Index Relief Assembly
Magnetic Mount for Bedknife
Steel Fabricated Frame
Dial Indicator Alignment Gauge
Grinding Carriage Travels on
  Precision Ground Round Rails
Machine Dimensions:
  Depth = 42"
  Width = 67"
  Height = 83"
  Weight = 790 lbs
Setup Time =  2 Hrs
```

CODE	ATTACHMENT IDENTIFIER	DESCRIPTION	SUGGESTED LIST PRICE USD ($)
		Select One Code From Each Required Category	
		BASE MACHINE	
172AXF		RG5000 - Manual Spin and Relief Reel Grinder - Quebec	16,735.00
		ATTACHMENTS - ORDER AS DESIRED	
9523		RG5000 Pull Gang Mounting Kit	530.00
9524		RG5000 Walking Greens Mower Kit	130.00
		ATTACHMENTS FOR FIELD CONVERSION	
		Miscellaneous:	
	5NT18574	RG5000 Pull Gang Mounting Kit	572.40
	5NT6000550	RG5000 Walking Greens Mower Kit	145.60

RG5000 - Manual Spin and Relief Reel Grinder - Quebec
Continued

THIS PAGE IS INTENTIONALLY LEFT BLANK

RG5500 - Semi-Automatic Spin and Relief Reel Grinder - Quebec

Equipment for Base Machine

```
Power:
  115 Volt AC, 50 or 60 Hz 20 Amp Circuit
Grind Motor:
  1 HP Totally Enclosed
  3450 rpm
Spin Motor:
  1/5 HP DC  variable speed
  0-350 rpm
Travel Motor:
  1/20 HP DC  variable speed
  0-34 rpm
Spin Grinding Wheel:
  Resinoid 6" OD X 1/2" ID X 1" Face
Relief Grinding Wheel:
  Resenoid 6" OD X 1/2" ID X 3/8" Face
Manual Diamond Dresser
Digital Indicator Alignment System
Multi-Position Brackets
Front Roller Mounts
Wheel Wrench
Steel Fabricated Frame
Grinding Wheel Hubs Travel on a
  Precision Ground Alloy Steel Drive Shaft
Travel Length and Speed are Adjustable
Quick and Easy Setup with Table Top Style
Auto-Index Relief Grinding is Adjustable
  to Factory Recommendations
Patented Auto Index System Assures Quick Set Up
Machine Dimensions:
  Depth = 45"
  Width = 71"
  Height = 70"
  Weight = 1200 lbs
Setup Time =  1 Hr
```

CODE	ATTACHMENT IDENTIFIER	DESCRIPTION	SUGGESTED LIST PRICE USD ($)

Select One Code From Each Required Category

BASE MACHINE

173AXF		RG5500 - Semi-Automatic Spin and Relief Reel Grinder - Quebec	26,825.00

REEL LIFT OPTIONS

2095		No Lift	In Base Price
2010		Boom & Manual Hoist	1,315.00
2020		Boom & Electric Winch	2,550.00
2030		Platform Lift System - 115 VAC	5,295.00

ATTACHMENTS - ORDER AS DESIRED

9520		RG5500 Boom & Manual Hoist (French)	1,315.00
9521		RG5500 Boom & Electric Winch (French)	2,550.00
9522		RG5500 Platform Lift System - 115 VAC (French)	5,295.00

ATTACHMENTS FOR FIELD CONVERSION

		Miscellaneous:	
	5NT16210901	RG5500 Boom & Electric Winch	2,754.00
	5NT16210902	RG5500 Boom & Electric Winch (French)	2,754.00
	5NT16200901	RG5500 Boom & Manual Hoist	1,420.20
	5NT16200902	RG5500 Boom & Manual Hoist (French)	1,420.20

RG5500 - Semi-Automatic Spin and Relief Reel Grinder - Quebec
Continued

CODE	ATTACHMENT IDENTIFIER	DESCRIPTION	SUGGESTED LIST PRICE USD ($)
		ATTACHMENTS FOR FIELD CONVERSION ...Continued...	
	5NT16220901	RG5500 Platform Lift System - 115 VAC	5,718.60
	5NT16220902	RG5500 Platform Lift System - 115 VAC (French)	5,718.60

DM1140 Disc Mower

Equipment for Base Machine

Hitch Type: 3-Point
Hitch Category:
  Category I or II
Cutting Width: 5 Ft. 3 In.
Operation Cutting Angle:
  +/- 10 Degrees
Number of Cutting Discs: 4
Number of Knives: 8
PTO Drive: 540 RPM
PTO HP Requirement: 28 HP
Average Swath Width: 3 Ft. 11 In.
Approximate Acres/Hr: 1 - 1.5
Cutterbar Lift Mechanism: Hydraulic
Outer Swath Board: Standard
Shipping Information:
  2 Units/Crate 1870 lbs.

Safety Breakaway: Yes
Transport Width:
  Tractor Width + Approximately 10 In.
Required Hydraulic Outlets:
  1 Single Acting Valve
  (Mechanical Lift Available)
iMatch Compatible: No
Warranty: 1 Year
Set-Up Time: 2 Man Hours/Unit

CODE	ATTACHMENT IDENTIFIER	DESCRIPTION	SUGGESTED LIST PRICE USD ($)

Select One Code From Each Required Category

BASE MACHINE

0402XF		DM1140 Disc Mower *Order in multiples of two.*	7,744.00

ATTACHMENTS FOR FIELD CONVERSION

		Miscellaneous:	
	5KN56282310	French Operators Manual and Frontier Decals (DM1140)	50.44
	5KN1086060	Heavy Duty PTO Shaft (DM1140, DM1150, DM1160)	288.36
	5KN1016090	Hydraulic Lift Mechanism (DM1140)	317.52
	5KN1016080	Mechanical Lift Mechanism (DM1140)	288.36

THIS PAGE IS INTENTIONALLY LEFT BLANK

DM1150 Disc Mower

Equipment for Base Machine

Hitch Type: 3-Point
Hitch Category: Category I or II
Cutting Width: 6 Ft. 7 In.
Operation Cutting Angle:
  +/- 10 Degrees
Number of Cutting Discs: 5
Number of Knives: 10
PTO Drive: 540 RPM
PTO HP Requirement: 35 HP
Average Swath Width: 4 Ft. 7 In.
Approximate Acres/Hr: 1.5 - 2
Cutterbar Lift Mechanism: Hydraulic
Outer Swath Board: Standard
Shipping Information:
  2 Units/Crate 2080 lbs.

Safety Breakaway: Yes
Transport Width:
  Tractor Width + Approximately 10 In.
Required Hydraulic Outlets:
  1 Single Acting Valve
iMatch Compatible: No
Set-Up Time: 4 Man Hours/Unit
Warranty: 1 Year

CODE	ATTACHMENT IDENTIFIER	DESCRIPTION	SUGGESTED LIST PRICE USD ($)

Select One Code From Each Required Category

BASE MACHINE

0403XF		DM1150 Disc Mower *Order in multiples of two.*	8,932.00

ATTACHMENTS FOR FIELD CONVERSION

		Miscellaneous:	
	5KN56282410	French Operators Manual and Frontier Decals (DM1150)	50.44
	5KN1086060	Heavy Duty PTO Shaft (DM1140, DM1150, DM1160)	288.36
	5KN1046050	Second Cone (DM1150) *Reduces swatch to approximately 2 Ft. 9 In.*	169.56

THIS PAGE IS INTENTIONALLY LEFT BLANK

DM1160 Disc Mower

Equipment for Base Machine

Hitch Type: 3-Point
Hitch Category: Category I or II
Cutting Width: 7 Ft. 10 In.
Operation Cutting Angle:
+/- 10 Degrees
Number of Cutting Discs: 6
Number of Knives: 12
PTO Drive: 540 RPM
PTO HP Requirement: 42 HP
Average Swath Width: 5 Ft. 11 In.
Approximate Acres/Hr: 2 - 2.5
Cutterbar Lift Mechanism: Hydraulic
Outer Swath Board: Standard
Shipping Information:
2 Units/Crate 2260 lbs.
Safety Breakaway: Yes
Transport Width:
Tractor Width + Approximately 10 In.
Required Hydraulic Outlets: None
iMatch Compatible: No
Set-Up Time: 4 Man Hours/Unit
Warranty: 1 Year

CODE	ATTACHMENT IDENTIFIER	DESCRIPTION	SUGGESTED LIST PRICE USD ($)

Select One Code From Each Required Category

BASE MACHINE

0404XF		DM1160 Disc Mower *Order in multiples of two.*	9,868.00

ATTACHMENTS FOR FIELD CONVERSION

		Miscellaneous:	
	5KN56282510	French Operators Manual and Frontier Decals (DM1160)	50.44
	5KN1086060	Heavy Duty PTO Shaft (DM1140, DM1150, DM1160)	288.36

THIS PAGE IS INTENTIONALLY LEFT BLANK

DM1270 Disc Mower

Equipment for Base Machine

Hitch Type: 3-Point
Hitch Category: Category I or II
Cutting Width: 9 Ft. 2 In.
Operation Cutting Angle:
  +/- 10 Degrees
Number of Cutting Discs: 7
Number of Knives: 14
PTO Drive: 540 RPM
PTO HP Requirement: 50 HP
Average Swath Width: 7 Ft. 3 In.
Approximate Acres/Hr: 2.5 - 3
Cutterbar Lift Mechanism: Hydraulic
Outer Swath Board: Standard
Shipping Information:
  2 Units/Crate 2332 lbs.

Safety Breakaway: Yes
Transport Width:
  Tractor Width + Approximately 10 In.
Required Hydraulic Outlets:
  1 Single Acting Valve
iMatch Compatible: No
Set-Up Time: 5 Man Hours/Unit
Warranty: 1 Year

CODE	ATTACHMENT IDENTIFIER	DESCRIPTION	SUGGESTED LIST PRICE USD ($)

Select One Code From Each Required Category

BASE MACHINE

0411XF		DM1270 Disc Mower *Order in multiples of two.*	11,257.00

ATTACHMENTS FOR FIELD CONVERSION

		Miscellaneous:	
	5KN1046070	Compensating Spring (DM1270)	290.52
	5KN56282610	French Operators Manual and Frontier Decals (DM1270)	50.44

THIS PAGE IS INTENTIONALLY LEFT BLANK

DC1000 Disc Mower Caddy

Equipment for Base Machine

Variable Integrated Ballasting System
Utilizes Standard John Deere Weights
  and Internal Ballast
Hydraulic Lift 3-Point Hitch
Includes Cylinders, Hoses, and Tips
Adjustable Clevis Tongue
Equal Angle Category IV 540 PTO Included

11L x 15SL Ribbed Implement Tires

CODE	ATTACHMENT IDENTIFIER	DESCRIPTION	SUGGESTED LIST PRICE USD ($)
		Select One Code From Each Required Category	
		BASE MACHINE	
0541XF		DC1000 Disc Mower Caddy *Assembly Required: 2 hours*	5,016.00

DC1000 Disc Mower Caddy
Continued

THIS PAGE IS INTENTIONALLY LEFT BLANK

TD1010E Economy Hay Tedder

Equipment for Base Machine

Hitch Type: Drawbar
Number of Rotors: 2
Number of Tine Arms per Rotor: 6
Width in Working Position:
10 Ft. 4 In. (3.1 m)
Tedding Width: 10 Ft. (3 m)
Tires: 15 x 6.00-6
Transport Width:
7 Ft. 6 In. (2.3 m)
PTO with Torque Limiter:
Standard
Tractor PTO HP Requirement:
Minimum 15 HP

CODE	ATTACHMENT IDENTIFIER	DESCRIPTION	SUGGESTED LIST PRICE USD ($)
		Select One Code From Each Required Category	
		BASE MACHINE	
0051XF		TD1010E Economy Hay Tedder *Order in multiples of two.*	3,161.00
		ATTACHMENTS - ORDER AS DESIRED	
9200		French Operators Manual and Frontier Decals (TD1010E)	No Charge
		ATTACHMENTS FOR FIELD CONVERSION	
		Miscellaneous:	
	5TNC10D0002	French Operators Manual and Decal Kit (TD1010E)	See Parts

TD1010E Economy Hay Tedder
Continued

THIS PAGE IS INTENTIONALLY LEFT BLANK

TD1316 Heavy Duty 4 Basket Hay Tedder

Equipment for Base Machine

Hitch Type: Drawbar
Number of Rotors: 4
Number of Baskets: 4
Number of Tine Arms per Rotor: 6
Width in Working Position: 17 Ft. 8 In.
Tedding Width: 16 Ft. 5 In.
Tires: 15 x 6.00-6
Transport Width: 9 Ft. 2 In.
PTO with Torque Limiter: Standard
PTO HP Requirement: 20 HP
Required Hydraulic Outlets:
1 Double Acting Valve

Reduction Gearbox for
Night Windrows: Optional
Anti-Wrap Deflectors: Optional
Shipping Weight: 1005 lbs.
Set-Up Time: 6 Man Hours/Unit
Warranty: 1 Year

CODE	ATTACHMENT IDENTIFIER	DESCRIPTION	SUGGESTED LIST PRICE USD ($)

Select One Code From Each Required Category

BASE MACHINE

0071XF		TD1316 Heavy Duty 4 Basket Hay Tedder	8,284.00

ATTACHMENTS FOR FIELD CONVERSION

		Miscellaneous:	
	5KN1116310	Anti Wrap Deflector Set (TD1316)	587.52
	5KNK8806521	French Operators Manual and Frontier Decals (TD1316)	55.48
	5KN1116440	Reduction Gearbox (TD1316) *For heavy or night windrows.*	857.52
	5KN1126530	Wheel Deflectors (TD1316)	74.52

TD1316 Heavy Duty 4 Basket Hay Tedder
Continued

THIS PAGE IS INTENTIONALLY LEFT BLANK

TD2418 Four Rotor 18 Ft. 2 In. Working Width Tedder

Equipment for Base Machine

10/2 Turbo Tines are Designed for Clean and Efficient Tedding
Radial Pin Clutch 540 RPM PTO Shaft
Fully Enclosed Oil Bath Gearboxes
Double U-Joint Arm Joints
Standard Hydraulic Lift and Tilt
SMV, and Safety Tow Chain are Standard Equipment

1 Year Parts and Labor Warranty

CODE	ATTACHMENT IDENTIFIER	DESCRIPTION	SUGGESTED LIST PRICE USD ($)
		Select One Code From Each Required Category	
		BASE MACHINE	
0151XF		TD2418 Four Rotor 18 Ft. 2 In. Working Width Tedder	10,393.00
		ATTACHMENTS - ORDER AS DESIRED	
9200		French Operators Manual (TD2418)	No Charge
		ATTACHMENTS FOR FIELD CONVERSION	
		Miscellaneous:	
	5PQ903182	French Operators Manual (TD2418)	44.80

TD2418 Four Rotor 18 Ft. 2 In. Working Width Tedder
Continued

THIS PAGE IS INTENTIONALLY LEFT BLANK

TD2427 Six Rotor 26 Ft. 4 In. Working Width Tedder

Equipment for Base Machine

10/2 Turbo Tines are Designed for Clean and Efficient Tedding
Radial Pin Clutch 540 RPM PTO Shaft
Fully Enclosed Oil Bath Gearboxes
Double U-Joint Arm Joints
Standard Hydraulic Lift and Tilt
Transport Lights, SMV, and Safety Tow Chain are Standard Equipment

1 Year Parts and Labor Warranty

CODE	ATTACHMENT IDENTIFIER	DESCRIPTION	SUGGESTED LIST PRICE USD ($)
		Select One Code From Each Required Category	
		BASE MACHINE	
0152XF		TD2427 Six Rotor 26 Ft. 4 In. Working Width Tedder	21,488.00
		ATTACHMENTS - ORDER AS DESIRED	
9000		Wheel Fenders (TD2427) *Includes two fenders for transport wheels and mounting hardware.*	221.00
9200		French Operators Manual (TD2427)	No Charge
		ATTACHMENTS FOR FIELD CONVERSION	
		Miscellaneous:	
	5PQ903183	French Operators Manual (TD2427)	44.80
	5PQ740020	Wheel Fenders (TD2427) *Includes two fenders for transport wheels and mounting hardware.*	238.68

TD2427 Six Rotor 26 Ft. 4 In. Working Width Tedder
Continued

THIS PAGE IS INTENTIONALLY LEFT BLANK

WR1008 Carted Finger Wheel Rake with 8 Wheels

Equipment for Base Machine

Rake Wheel Diameter:
55 In. (1397 mm)
Teeth Per Wheel: 40
Tooth Diameter:
6.4 mm (0.2535 In.)
Transport Width:
10 Ft. 11 In. (3.3 m)
Transport Length:
16 Ft. (4.9 m)
Windrow Width Adjustment:
48 to 72 In. (1,219.2 to 1,828.8 mm)
Raking Width: 19 Ft. 8 In. Maximum (6 m)
Raking Wheel Hubs: Ball Bearing

Wing Flex: 3 Ft. Up or Down (914.4 mm)
Number of Transport Wheels: 2
Number of Raking Wheels: 8
Transport Wheels: 185/65-14
Hitch Jack: Standard
Center Kicker Wheel: Optional

CODE	ATTACHMENT IDENTIFIER	DESCRIPTION	SUGGESTED LIST PRICE USD ($)
		Select One Code From Each Required Category	
		BASE MACHINE	
0081XF		WR1008 Carted Finger Wheel Rake with 8 Wheels *Order in multiples of two.*	5,061.00
		CENTER KICKER WHEEL	
1000		Center Kicker Wheel	316.00
1010		Less Center Kicker Wheel	In Base Price
		ATTACHMENTS - ORDERED AS DESIRED	
9010		Wind Panels with Hardware *Quantity of 8.*	328.00
9200		French Operators Manual and Decal Kit (WR1008, WR1010 and WR1012)	No Charge
		ATTACHMENTS FOR FIELD CONVERSION	
		Miscellaneous:	
	5TN90401014	Center Kicker Wheel (WR1008, WR1010 and WR1012)	341.93
	5TNC10D0001	French Operators Manual and Decal Kit (WR1008, WR1010 and WR1012)	See Parts
	5TN90399247	Wind Panel with Hardware (WR10, WR21, WR22, WR23, WR41, and WR43 Series)	45.92

WR1008 Carted Finger Wheel Rake with 8 Wheels
Continued

THIS PAGE IS INTENTIONALLY LEFT BLANK

WR1010 Carted Finger Wheel Rake with 10 Wheels

Equipment for Base Machine

Rake Wheel Diameter:
55 In. (1397 mm)
Teeth Per Wheel: 40
Tooth Diameter:
6.4 mm (0.2535 In.)
Transport Width:
10 Ft. 11 In. (3.3 m)
Transport Length:
17 Ft. 7 In. (5.4 m)
Windrow Width Adjustment:
48 to 72 In. (1,219.2 to 1,828.8 mm)
Raking Width: 22 Ft. Maximum (6.7 m)
Raking Wheel Hubs: Ball Bearing

Wing Flex: 3 Ft. Up or Down (914.4 mm)
Number of Transport Wheels: 2
Number of Raking Wheels: 10
Transport Wheels: 185/65-14
Hitch Jack: Standard
Center Kicker Wheel: Optional

CODE	ATTACHMENT IDENTIFIER	DESCRIPTION	SUGGESTED LIST PRICE USD ($)
		Select One Code From Each Required Category	
		BASE MACHINE	
0082XF		WR1010 Carted Finger Wheel Rake with 10 Wheels *Order in multiples of two.*	5,549.00
		CENTER KICKER WHEEL	
1000		Center Kicker Wheel	316.00
1010		Less Center Kicker Wheel	In Base Price
		ATTACHMENTS - ORDERED AS DESIRED	
9010		Wind Panels with Hardware *Quantity of 10.*	410.00
9200		French Operators Manual and Decal Kit (WR1008, WR1010 and WR1012)	No Charge
		ATTACHMENTS FOR FIELD CONVERSION	
		Miscellaneous:	
	5TN90401014	Center Kicker Wheel (WR1008, WR1010 and WR1012)	341.93
	5TNC10D0001	French Operators Manual and Decal Kit (WR1008, WR1010 and WR1012)	See Parts
	5TN90399247	Wind Panel with Hardware (WR10, WR21, WR22, WR23, WR41, and WR43 Series)	45.92

WR1010 Carted Finger Wheel Rake with 10 Wheels
Continued

THIS PAGE IS INTENTIONALLY LEFT BLANK

WR1012 Carted Finger Wheel Rake with 12 Wheels

Equipment for Base Machine

Rake Wheel Diameter:
55 In. (1397 mm)
Teeth Per Wheel: 40
Tooth Diameter:
6.4 mm (0.2535 In.)
Transport Width:
10 Ft. 11 In. (3.3 m)
Transport Length:
18 Ft. 8 In. (5.7 m)
Windrow Width Adjustment:
48 to 72 In. (1,219.2 to 1,828.8 mm)
Raking Width: 24 Ft. 4 In.
Maximum (7.4 m)

Raking Wheel Hubs: Ball Bearing
Wing Flex: 3 Ft. Up or Down (914.4 mm)
Number of Transport Wheels: 2
Number of Raking Wheels: 12
Transport Wheels: 185/65-14
Hitch Jack: Standard
Center Kicker Wheel: Optional

CODE	ATTACHMENT IDENTIFIER	DESCRIPTION	SUGGESTED LIST PRICE USD ($)
		Select One Code From Each Required Category	
		BASE MACHINE	
0083XF		WR1012 Carted Finger Wheel Rake with 12 Wheels *Order in multiples of two.*	6,489.00
		CENTER KICKER WHEEL	
1000		Center Kicker Wheel	316.00
1010		Less Center Kicker Wheel	In Base Price
		ATTACHMENTS - ORDERED AS DESIRED	
9010		Wind Panels with Hardware *Quantity of 12.*	492.00
9200		French Operators Manual and Decal Kit (WR1008, WR1010 and WR1012)	No Charge
		ATTACHMENTS FOR FIELD CONVERSION	
		Miscellaneous:	
	5TN90401014	Center Kicker Wheel (WR1008, WR1010 and WR1012)	341.93
	5TNC10D0001	French Operators Manual and Decal Kit (WR1008, WR1010 and WR1012)	See Parts
	5TN90399247	Wind Panel with Hardware (WR10, WR21, WR22, WR23, WR41, and WR43 Series)	45.92

WR1012 Carted Finger Wheel Rake with 12 Wheels
Continued

THIS PAGE IS INTENTIONALLY LEFT BLANK

WR1212 High Capacity Wheel Rake

Equipment for Base Machine

Number of Wheels: 12
Teeth per Wheel: 40
Tooth Diameter: 7 mm
Wheel Diameter: 55 In.
Transport Width: 8 Ft. 1 In.
Transport Length: 24 Ft. 6 In.
Raking Width:
  Up to 24 Ft. Hydraulic Settings
Windrow Width Adjustment:
  38 In. to 58 In.
Raking Wheel Hubs: Tapered Bearings
Wing Flex: 3 Ft. Up or Down
Number of Transport Wheels: 4

Hitch Jack: Standard
Center Kicker Wheels: Optional
Tandem Rear Wheels: Optional
Transport Wheels: 6.70 x 15 In.
Gauge Wheels: 15 In.
Assembly/Set-Up Time: 7 Man Hours
Weight: 3500 lbs.

CODE	ATTACHMENT IDENTIFIER	DESCRIPTION	SUGGESTED LIST PRICE USD ($)
		Select One Code From Each Required Category	
		BASE MACHINE	
0101XF		WR1212 High Capacity Wheel Rake *Raking widths up to 24 Ft. Order hydraulic couplers as attachments.*	14,949.00
		CENTER KICKER WHEEL	
1000		Center Kicker Wheels (2) *Two center kicker wheels with hydraulic lift.*	1,538.00
1010		Less Center Kicker Wheels	In Base Price
		REAR TANDEM	
2000		Rear Tandem Wheels	1,106.00
2010		Less Rear Tandem Wheels	In Base Price
		ATTACHMENTS - ORDERED AS DESIRED	
9000		Wind Panels with Hardware *Quantity of 12.*	948.00
9010		Center Kicker Wheels (3) *Three center kicker wheels with hydraulic lift.*	2,625.00
9020		Set of Hydraulic Couplers (WR12 Series)	32.00
		ATTACHMENTS FOR FIELD CONVERSION	
		Miscellaneous:	
	5HPBFO212HC	Center Kicker Wheels (2)	1,686.96
	5HPBFO23W12	Center Kicker Wheels (3)	2,799.36
	5HPBFO7	One Wind Panel with Hardware	90.72

WR1212 High Capacity Wheel Rake
Continued

CODE	ATTACHMENT IDENTIFIER	DESCRIPTION	SUGGESTED LIST PRICE USD ($)
		ATTACHMENTS FOR FIELD CONVERSION ...Continued...	
	5HPBFO6	Rear Tandem Wheels	1,271.16
	5HPBFO13	Set of Hydraulic Couplers	35.84

WR1214 High Capacity Wheel Rake with Rear Tandem Wheels

Equipment for Base Machine

Number of Wheels: 14
Teeth per Wheel: 40
Tooth Diameter: 7 mm
Wheel Diameter: 55 In.
Transport Width: 8 Ft. 1 In.
Transport Length: 27 Ft. 3 In.
Raking Width:
  Up to 28 Ft. Hydraulic Settings
Windrow Width Adjustment:
  38 In. to 58 In.
Raking Wheel Hubs: Roller Bearings
Wing Flex: 3 Ft. Up or Down
Number of Transport Wheels: 6
Hitch Jack: Standard

Center Kicker Wheels: Optional
Tandem Rear Wheels: Standard
Wheel Expansion: Optional
Transport Wheels: 6.70 x 15 In.
Gauge Wheels: 15 In.
Assembly/Set-Up Time: 8 Man Hours
Weight: 3800 lbs.

CODE	ATTACHMENT IDENTIFIER	DESCRIPTION	SUGGESTED LIST PRICE USD ($)
		Select One Code From Each Required Category	
		BASE MACHINE	
0102XF		WR1214 High Capacity Wheel Rake with Rear Tandem Wheels *Raking widths up to 28 Ft. Order hydraulic couplers as attachments.*	18,504.00
		CENTER KICKER WHEEL	
1000		Center Kicker Wheels (2) *Two center kicker wheels with hydraulic lift.*	1,538.00
1010		Less Center Kicker Wheels	In Base Price
		RAKE BEAM SUPPORTS	
3000		Rake Beam Support Wheels *Includes 15 In. tires.*	1,338.00
3010		Less Rake Beam Supports	In Base Price
		ATTACHMENTS - ORDERED AS DESIRED	
9000		Wind Panels with Hardware *Quantity of 14.*	1,106.00
9010		Center Kicker Wheels (3) *Three center kicker wheels with hydraulic lift.*	2,625.00
9020		Set of Hydraulic Couplers (WR12 Series)	32.00
		ATTACHMENTS FOR FIELD CONVERSION	
		Miscellaneous:	
	5HPBFO214HC	Center Kicker Wheels (2)	1,686.96
	5HPBFO23W14	Center Kicker Wheels (3)	2,835.00
	5HPBFO7	One Wind Panel with Hardware	90.72

WR1214 High Capacity Wheel Rake with Rear Tandem Wheels
Continued

CODE	ATTACHMENT IDENTIFIER	DESCRIPTION	SUGGESTED LIST PRICE USD ($)
		ATTACHMENTS FOR FIELD CONVERSION ...Continued...	
	5HPBFO415	Rake Beam Support Wheels (WR1214 and WR1216) *Includes 15 In. tires.*	1,452.60
	5HPBFO13	Set of Hydraulic Couplers	35.84

WR1216 High Capacity Wheel Rake with Rear Tandem Wheels

Equipment for Base Machine

Number of Wheels: 16
Teeth per Wheel: 40
Tooth Diameter: 7 mm
Wheel Diameter: 55 In.
Transport Width: 8 Ft. 1 In.
Transport Length: 30 Ft. 3 In.
Raking Width:
  Up to 32 Ft. Hydraulic Settings
Windrow Width Adjustment:
  38 In. to 58 In.
Raking Wheel Hubs: Roller Bearings
Wing Flex: 3 Ft. Up or Down
Number of Transport Wheels: 6

Hitch Jack: Standard
Center Kicker Wheels: Optional
Tandem Rear Wheels: Standard
Transport Wheels: 6.70 x 15 In.
Gauge Wheels: 15 In.
Assembly/Set-Up Time: 9 Man Hours
Weight: 4200 lbs.

CODE	ATTACHMENT IDENTIFIER	DESCRIPTION	SUGGESTED LIST PRICE USD ($)
		Select One Code From Each Required Category	
		BASE MACHINE	
0103XF		WR1216 High Capacity Wheel Rake with Rear Tandem Wheels *Raking widths up to 32 Ft. Order hydraulic couplers as attachments.*	20,297.00
		CENTER KICKER WHEEL	
1000		Center Kicker Wheels (2) *Two center kicker wheels with hydraulic lift.*	1,538.00
1010		Less Center Kicker Wheels	In Base Price
		RAKE BEAM SUPPORTS	
3000		Rake Beam Support Wheels *Includes 15 In. tires.*	1,338.00
3010		Less Rake Beam Supports	In Base Price
		ATTACHMENTS - ORDERED AS DESIRED	
9000		Wind Panels with Hardware *Quantity of 16.*	1,264.00
9010		Center Kicker Wheels (3) *Three center kicker wheels with hydraulic lift.*	2,625.00
9020		Set of Hydraulic Couplers (WR12 Series)	32.00
		ATTACHMENTS FOR FIELD CONVERSION	
		Miscellaneous:	
	5HPBFO214HC	Center Kicker Wheels (2)	1,686.96
	5HPBFO23W14	Center Kicker Wheels (3)	2,835.00
	5HPBFO7	One Wind Panel with Hardware	90.72

WR1216 High Capacity Wheel Rake with Rear Tandem Wheels
Continued

CODE	ATTACHMENT IDENTIFIER	DESCRIPTION	SUGGESTED LIST PRICE USD ($)
		ATTACHMENTS FOR FIELD CONVERSION ...Continued...	
	5HPBFO415	Rake Beam Support Wheels (WR1214 and WR1216) *Includes 15 In. tires.*	1,452.60
	5HPBFO13	Set of Hydraulic Couplers	35.84

WR2110 Standard Duty High Capacity Wheel Rake with 10 Wheels

Equipment for Base Machine

Rake Wheel Diameter:
55 In. (1397 mm)
Teeth Per Wheel: 40
Tooth Diameter:
7 mm (0.2756 In.)
Transport Width:
9 Ft. (2.7 m)
Transport Length:
24 Ft. (7.3 m)
Windrow Width Adjustment:
48 to 72 In. (1,219.2 to 1,828.8 mm)
Raking Width:
19 Ft. 6 In. Maximum (6 m)
Raking Wheel Hubs: Ball Bearing
Drawbar or Hitch Flex:
11 Degree Up and 26 Degree Down
Number of Transport Wheels: 4
Number of Raking Wheels: 10
Transport Wheels: 185/65-14
Hitch Jack: Standard
Center Kicker Wheel: Optional
Raking Width with 2 Wheel Extension Kit:
22 Ft. 5 In. Maximum (6.8 m)

CODE	ATTACHMENT IDENTIFIER	DESCRIPTION	SUGGESTED LIST PRICE USD ($)
		Select One Code From Each Required Category	
		BASE MACHINE	
0191XF		WR2110 Standard Duty High Capacity Wheel Rake with 10 Wheels	9,610.00
		CENTER KICKER WHEEL	
1000		Center Kicker Wheel *For WR2110, WR2112 and WR2114 Standard Duty High Capacity Rakes.*	693.00
1010		Less Center Kicker Wheel	In Base Price
		ATTACHMENTS - ORDER AS DESIRED	
9010		Wind Panels with Hardware *Quantity of 10.*	410.00
9020		2 Wheel Extension Kit	570.00
9030		2 Wind Panels with Hardware for 2 Wheel Extension Kit	82.00
9200		French Operators Manual and Decal Kit (WR2110, WR2112 and WR2114)	No Charge
		ATTACHMENTS FOR FIELD CONVERSION	
		Miscellaneous:	
	5TN90202051	2 Wheel Extension Kit (WR21 Series)	748.38
	5TN90302051	2 Wheel Extension Kit (WR2110)	615.99
	5TNC10D0008	French Operators Manual and Decal Kit (WR2110, WR2112 and WR2114)	165.30
	5TN90399247	Wind Panel with Hardware (WR10, WR21, WR22, WR23, WR41, and WR43 Series)	45.92

WR2110 Standard Duty High Capacity Wheel Rake with 10 Wheels
Continued

THIS PAGE IS INTENTIONALLY LEFT BLANK

WR2112 Standard Duty High Capacity Wheel Rake with 12 Wheels

Equipment for Base Machine

Rake Wheel Diameter:
55 In. (1397 mm)
Teeth Per Wheel: 40
Tooth Diameter:
7 mm (0.2756 In.)
Transport Width:
9 Ft. (2.7 m)
Transport Length:
24 Ft. (7.3 m)
Windrow Width Adjustment:
48 to 72 In. (1,219.2 to 1,828.8 mm)
Raking Width:
22 Ft. 5 In. Maximum (6.8 m)
Raking Wheel Hubs: Ball Bearing
Drawbar or Hitch Flex:
11 Degree Up and 26 Degree Down
Number of Transport Wheels: 4
Number of Raking Wheels: 12
Transport Wheels: 185/65-14
Hitch Jack: Standard
Center Kicker Wheel: Optional
Raking Width with 2 Wheel Extension Kit:
22 Ft. 5 In. Maximum (6.8 m)

CODE	ATTACHMENT IDENTIFIER	DESCRIPTION	SUGGESTED LIST PRICE USD ($)
		Select One Code From Each Required Category	
		BASE MACHINE	
0193XF		WR2112 Standard Duty High Capacity Wheel Rake with 12 Wheels	10,331.00
		CENTER KICKER WHEEL	
1000		Center Kicker Wheel *For WR2110, WR2112 and WR2114 Standard Duty High Capacity Rakes.*	693.00
1010		Less Center Kicker Wheel	In Base Price
		ATTACHMENTS - ORDER AS DESIRED	
9010		Wind Panels with Hardware *Quantity of 12.*	492.00
9200		French Operators Manual and Decal Kit (WR2110, WR2112 and WR2114)	No Charge
		ATTACHMENTS FOR FIELD CONVERSION	
		Miscellaneous:	
	5TN90202051	2 Wheel Extension Kit (WR21 Series)	748.38
	5TNC10D0008	French Operators Manual and Decal Kit (WR2110, WR2112 and WR2114)	165.30
	5TN90399247	Wind Panel with Hardware (WR10, WR21, WR22, WR23, WR41, and WR43 Series)	45.92

WR2112 Standard Duty High Capacity Wheel Rake with 12 Wheels
Continued

THIS PAGE IS INTENTIONALLY LEFT BLANK

WR2114 Standard Duty High Capacity Wheel Rake with 14 Wheels

Equipment for Base Machine

Rake Wheel Diameter:
55 In. (1397 mm)
Teeth Per Wheel: 40
Tooth Diameter:
7 mm (0.2756 In.)
Transport Width:
9 Ft. (2.7 m)
Transport Length:
26 Ft. 5 In. (8.1 m)
Windrow Width Adjustment:
48 to 72 In. (1,219.2 to 1,828.8 mm)
Raking Width:
25 Ft. 4 In. Maximum (7.7 m)
Raking Wheel Hubs: Ball Bearing

Drawbar or Hitch Flex:
11 Degree Up and 26 Degree Down
Number of Transport Wheels: 4
Number of Raking Wheels: 14
Transport Wheels: 185/65-14
Hitch Jack: Standard
Center Kicker Wheel: Optional

CODE	ATTACHMENT IDENTIFIER	DESCRIPTION	SUGGESTED LIST PRICE USD ($)
		Select One Code From Each Required Category	
		BASE MACHINE	
0192XF		WR2114 Standard Duty High Capacity Wheel Rake with 14 Wheels	11,340.00
		CENTER KICKER WHEEL	
1000		Center Kicker Wheel *For WR2110, WR2112 and WR2114 Standard Duty High Capacity Rakes.*	693.00
1010		Less Center Kicker Wheel	In Base Price
		ATTACHMENTS - ORDER AS DESIRED	
9010		Wind Panels with Hardware *Quantity of 14.*	574.00
9200		French Operators Manual and Decal Kit (WR2110, WR2112 and WR2114)	No Charge
		ATTACHMENTS FOR FIELD CONVERSION	
		Miscellaneous:	
	5TN90202051	2 Wheel Extension Kit (WR21 Series)	748.38
	5TNC10D0008	French Operators Manual and Decal Kit (WR2110, WR2112 and WR2114)	165.30
	5TN90399247	Wind Panel with Hardware (WR10, WR21, WR22, WR23, WR41, and WR43 Series)	45.92

WR2114 Standard Duty High Capacity Wheel Rake with 14 Wheels
Continued

THIS PAGE IS INTENTIONALLY LEFT BLANK

WR2212 Medium Duty High Capacity Wheel Rake with 12 Wheels

Equipment for Base Machine

Rake Wheel Diameter:
55 In. (1397 mm)
Teeth Per Wheel: 40
Tooth Diameter:
7 mm (0.2756 In.)
5 In. x 5 In. Frame
(127 mm x 127 mm)
Draw Bar Shortens by 5 Ft. 7 In.
(1.7 m) in Working Position
Transport Width:
8 Ft. 4 In. (2.54 m)
Transport Length:
29 Ft. 6 In. (9 m)
Windrow Width Adjustment:
48 to 72 In. (1,219.2 to 1,828.8 mm)
Raking Width:
25 Ft. Maximum (7.62 m)
Raking Wheel Hubs: Ball Bearing

Fully Articulated Rake Beam Arms for
Better Raking on Uneven Terrain
Number of Transport Wheels:
4 (Optional 5th and 6th Wheels)
Optional Tandem Ground Wheels
Number of Raking Wheels: 12
Transport Wheels: 205/60-15
Hitch Jack: Standard
Center Kicker Wheel: Optional
Raking Width with 2 Wheel Extension Kit:
28 Ft. 4 In. Maximum (8.64 m)

CODE	ATTACHMENT IDENTIFIER	DESCRIPTION	SUGGESTED LIST PRICE USD ($)
		Select One Code From Each Required Category	
		BASE MACHINE	
0201XF		WR2212 Medium Duty High Capacity Wheel Rake with 12 Wheels	15,990.00
		CENTER KICKER WHEEL	
1000		Center Kicker Wheel *For WR2212 and WR2214 High Capacity Rakes.*	1,345.00
1010		Less Center Kicker Wheel	In Base Price
		ATTACHMENTS - ORDER AS DESIRED	
9010		Wind Panels with Hardware *Quantity of 12.*	492.00
9020		2 Wheel Extension Kit	1,151.00
9030		2 Wind Panels with Hardware for 2 Wheel Extension Kit	82.00
9040		Wind Panel with Hardware for Center Kicker Wheel	41.00
9050		Tandem Wheels	1,393.00
9060		5th and 6th Front Wheels	1,602.00
9200		French Operators Manual and Decal Kit (WR2212 and WR2214)	No Charge
		ATTACHMENTS FOR FIELD CONVERSION	
		Miscellaneous:	
	5TN90700109	2 Wheel Extension Kit (WR2212 and WR2318)	1,243.48
	5TN90700059	5th and 6th Front Wheels (WR2212 and WR2316)	1,730.52

WR2212 Medium Duty High Capacity Wheel Rake with 12 Wheels
Continued

CODE	ATTACHMENT IDENTIFIER	DESCRIPTION	SUGGESTED LIST PRICE USD ($)
		ATTACHMENTS FOR FIELD CONVERSION ...Continued...	
	5TN90700019	Center Kicker Wheel (WR2110, WR2114, WR2212 and WR2214)	1,452.98
	5TNC10D0006	French Operators Manual and Decal Kit (WR2212 and WR2214)	See Parts
	5TN90399589	Tandem Wheels (WR2212 and WR2214)	1,504.75
	5TN90399247	Wind Panel with Hardware (WR10, WR21, WR22, WR23, WR41, and WR43 Series)	45.92

WR2214 Flex Frame Medium Duty High Capacity Wheel Rake with 14 Wheels

Equipment for Base Machine

Rake Wheel Diameter:
55 In. (1397 mm)
Teeth Per Wheel: 40
Tooth Diameter:
7 mm (0.2756 In.)
5 In. x 5 In. Frame
(127 mm x 127 mm)
Draw Bar Shortens by 5 Ft. 7 In.
(1.7 m) in Working Position
Transport Width:
8 Ft. 4 In. (2.54 m)
Transport Length:
29 Ft. 6 In. (9 m)
Windrow Width Adjustment:
48 to 72 In. (1,219.2 to 1,828.8 mm)
Raking Width:
28 Ft. 4 In. Maximum (8.64 m)
Raking Wheel Hubs: Ball Bearing
Fully Articulated Rake Beam Arms for
Better Raking on Uneven Terrain
Number of Transport Wheels: 6
Optional Tandem Ground Wheels
Number of Raking Wheels: 14
Transport Wheels: 205/60-15
Hitch Jack: Standard
Center Kicker Wheel: Optional

CODE	ATTACHMENT IDENTIFIER	DESCRIPTION	SUGGESTED LIST PRICE USD ($)
		Select One Code From Each Required Category	
		BASE MACHINE	
0202XF		WR2214 Flex Frame Medium Duty High Capacity Wheel Rake with 14 Wheels	18,720.00
		CENTER KICKER WHEEL	
1000		Center Kicker Wheel *For WR2212 and WR2214 High Capacity Rakes.*	1,345.00
1010		Less Center Kicker Wheel	In Base Price
		ATTACHMENTS - ORDER AS DESIRED	
9010		Wind Panels with Hardware *Quantity of 14.*	574.00
9020		Wind Panel with Hardware for Center Kicker Wheel	41.00
9030		Tandem Wheels	1,393.00
9200		French Operators Manual and Decal Kit (WR2212 and WR2214)	No Charge
		ATTACHMENTS FOR FIELD CONVERSION	
		Miscellaneous:	
	5TN90700019	Center Kicker Wheel (WR2110, WR2114, WR2212 and WR2214)	1,452.98
	5TNC10D0006	French Operators Manual and Decal Kit (WR2212 and WR2214)	See Parts
	5TN90399589	Tandem Wheels (WR2212 and WR2214)	1,504.75
	5TN90399247	Wind Panel with Hardware (WR10, WR21, WR22, WR23, WR41, and WR43 Series)	45.92
	5TN90399248	Wind Panel with Hardware for Center Kicker Wheel (WR22 and WR23 Series)	46.56

WR2214 Flex Frame Medium Duty High Capacity Wheel Rake with 14 Wheels
Continued

THIS PAGE IS INTENTIONALLY LEFT BLANK

WR2316 Heavy Duty High Capacity Wheel Rake with 16 Wheels

Equipment for Base Machine

Rake Wheel Diameter:
55 In. (1397 mm)
Teeth Per Wheel: 40
Tooth Diameter:
7 mm (0.2756 In.)
6 In. x 8 In. Main Frame
(152 mm x 203 mm)
5 In. x 5 In. Side Frame
(127 mm x 127 mm)
Draw Bar Shortens by 5 Ft. 3 In.
(1.6 m) in Working Position
Transport Width:
10 Ft. (3 m)
Transport Length:
29 Ft. 6 In. (9 m)
Windrow Width Adjustment:
48 to 72 In. (1,219.2 to 1,828.8 mm)
Raking Width:
32 Ft. Maximum (7.75 m)
Raking Wheel Hubs: Ball Bearing
Fully Articulated Rake Beam Arms for
Better Raking on Uneven Terrain
Number of Transport Wheels:
4 (Optional 5th & 6th Wheels)
Optional Tandem Ground Wheels
Number of Raking Wheels: 16
Transport Wheels: 205/60-15
Hitch Jack: Standard
Center Kicker Wheel: Optional

CODE	ATTACHMENT IDENTIFIER	DESCRIPTION	SUGGESTED LIST PRICE USD ($)
		Select One Code From Each Required Category	
		BASE MACHINE	
0211XF		WR2316 Heavy Duty High Capacity Wheel Rake with 16 Wheels	20,976.00
		CENTER KICKER WHEEL	
1000		Center Kicker Wheel *For WR2316 High Capacity Rakes.*	1,148.00
1010		Less Center Kicker Wheel	In Base Price
		ATTACHMENTS - ORDER AS DESIRED	
9010		Wind Panels with Hardware *Quantity of 16.*	656.00
9020		Wind Panel with Hardware for Center Kicker Wheel	41.00
9030		Tandem Wheels	1,393.00
9040		5th and 6th Front Wheels	1,602.00
9200		French Operators Manual and Decal Kit (WR2316 and WR2318)	No Charge
		ATTACHMENTS FOR FIELD CONVERSION	
		Miscellaneous:	
	5TN90700059	5th and 6th Front Wheels (WR2212 and WR2316)	1,730.52
	5TN90700309	Center Kicker Wheel (WR2316)	1,240.03
	5TNC10D0007	French Operators Manual and Decal Kit (WR2316 and WR2318)	See Parts
	5TN90399599	Tandem Wheels (WR2316 and WR2318)	1,504.75

WR2316 Heavy Duty High Capacity Wheel Rake with 16 Wheels
Continued

CODE	ATTACHMENT IDENTIFIER	DESCRIPTION	SUGGESTED LIST PRICE USD ($)
		ATTACHMENTS FOR FIELD CONVERSION ...Continued...	
	5TN90399247	Wind Panel with Hardware (WR10, WR21, WR22, WR23, WR41, and WR43 Series)	45.92

WR2318 Heavy Duty High Capacity Wheel Rake with 18 Wheels

Equipment for Base Machine

Rake Wheel Diameter:
55 In. (1397 mm)
Teeth Per Wheel: 40
Tooth Diameter:
7 mm (0.2756 In.)
6 In. x 8 In. Main Frame
(152 mm x 203 mm)
5 In. x 5 In. Side Frame
(127 mm x 127 mm)
Draw Bar Shortens by 5 Ft. 3 In.
(1.6 m) in Working Position
Transport Width:
10 Ft. (3 m)
Transport Length:
36 Ft. (11 m)
Windrow Width Adjustment:
48 to 72 In. (1,219.2 to 1,828.8 mm)
Raking Width:
35 Ft. 4 In. Maximum (10.8 m)
Raking Wheel Hubs: Ball Bearing
Fully Articulated Rake Beam Arms for
Better Raking on Uneven Terrain
Number of Transport Wheels: 7
Optional Tandem Ground Wheels
Number of Raking Wheels: 18
Transport Wheels: 205/60-15
Hitch Jack: Standard
Center Kicker Wheel: Optional
Raking Width with 2 Wheel Extension Kit:
39 Ft. Maximum (11.94 m)

CODE	ATTACHMENT IDENTIFIER	DESCRIPTION	SUGGESTED LIST PRICE USD ($)
		Select One Code From Each Required Category	
		BASE MACHINE	
0212XF		WR2318 Heavy Duty High Capacity Wheel Rake with 18 Wheels	24,500.00
		CENTER KICKER WHEEL	
1000		Center Kicker Wheel *For WR2318 High Capacity Rakes.*	1,860.00
1010		Less Center Kicker Wheel	In Base Price
		ATTACHMENTS - ORDER AS DESIRED	
9010		Wind Panels with Hardware *Quantity of 18.*	738.00
9020		2 Wheel Extension Kit	1,151.00
9030		2 Wind Panels with Hardware for 2 Wheel Extension Kit	82.00
9040		Wind Panel with Hardware for Center Kicker Wheel	41.00
9050		Tandem Wheels	1,393.00
9200		French Operators Manual and Decal Kit (WR2316 and WR2318)	No Charge
		ATTACHMENTS FOR FIELD CONVERSION	
		Miscellaneous:	
	5TN90700109	2 Wheel Extension Kit (WR2212 and WR2318)	1,243.48
	5TN90700359	Center Kicker Wheel (WR2318)	2,009.01
	5TNC10D0007	French Operators Manual and Decal Kit (WR2316 and WR2318)	See Parts

WR2318 Heavy Duty High Capacity Wheel Rake with 18 Wheels
Continued

CODE	ATTACHMENT IDENTIFIER	DESCRIPTION	SUGGESTED LIST PRICE USD ($)
		ATTACHMENTS FOR FIELD CONVERSION ...Continued...	
	5TN90399599	Tandem Wheels (WR2316 and WR2318)	1,504.75
	5TN90399247	Wind Panel with Hardware (WR10, WR21, WR22, WR23, WR41, and WR43 Series) *Order 18 wind panels to fit WR2316.* *Order two wind panels (includes hardware for 2 wheel extension kit for a WR2212).*	45.92
	5TN90399248	Wind Panel with Hardware for Center Kicker Wheel (WR22 and WR23 Series)	46.56

WR3008 Carted Wheel Rake

Equipment for Base Machine

Raking Widths of 15 to 19 Ft.
Windrow Widths of 3 to 5 Ft.
Single Acting Cylinder with
 Hose and Hydraulic Coupler Included
Center Kicker Wheel NOT Available
Hitch Jack Doubles as
  Windrow Width Adjuster
Three Position Raking Width Adjustment
  with Turnbuckles for Fine Tuning
Adjustable Spring for
  Varying Rake Wheel Down Pressure
Dual Tapered Bearings in Rake Wheel Hubs
New ST175/80D13 Tires
Adjustable Hitch Clevis for
  Various Drawbar Heights
Optional Second Hose Kit with Coupler

CODE	ATTACHMENT IDENTIFIER	DESCRIPTION	SUGGESTED LIST PRICE USD ($)

Select One Code From Each Required Category

BASE MACHINE

0161XF		WR3008 Carted Wheel Rake *Raking widths of 15 to 19 Ft. Single hose and hydraulic coupler included. Center kicker wheel NOT available.*	6,010.00

ATTACHMENTS FOR FIELD CONVERSION

		Miscellaneous:	
	5HPCRO2	Second Hose Kit *Includes coupler.*	61.60

WR3008 Carted Wheel Rake
Continued

THIS PAGE IS INTENTIONALLY LEFT BLANK

WR3010 Carted Wheel Rake

Equipment for Base Machine

Raking Widths of 18 to 22 Ft.
Windrow Widths of 4 to 6 Ft.
Single Acting Cylinder with
  Hose and Hydraulic Coupler Included
Optional Center Kicker Wheel
Hitch Jack Doubles as
  Windrow Width Adjuster
Three Position Raking Width Adjustment
  with Turnbuckles for Fine Tuning
Adjustable Spring for
  Varying Rake Wheel Down Pressure
Dual Tapered Bearings in Rake Wheel Hubs
New ST175/80D13 Tires
Adjustable Hitch Clevis for
  Various Drawbar Heights
Optional Second Hose Kit with Coupler

CODE	ATTACHMENT IDENTIFIER	DESCRIPTION	SUGGESTED LIST PRICE USD ($)
		Select One Code From Each Required Category	
		BASE MACHINE	
0162XF		WR3010 Carted Wheel Rake *Raking widths of 18 to 22 Ft. Single hose and hydraulic coupler included.*	6,218.00
		CENTER KICKER WHEEL	
1000		Center Kicker Wheel	511.00
1010		Less Center Kicker Wheel	In Base Price
		ATTACHMENTS - ORDER AS DESIRED	
9000		Second Hose Kit with Coupler *Includes coupler.*	55.00
		ATTACHMENTS FOR FIELD CONVERSION	
		Miscellaneous:	
	5HPCRO1	Center Kicker Wheel	551.88
	5HPCRO2	Second Hose Kit *Includes coupler.*	61.60

WR3010 Carted Wheel Rake
Continued

THIS PAGE IS INTENTIONALLY LEFT BLANK

WR3012 Carted Wheel Rake

Equipment for Base Machine

Raking Widths of 20 to 24 Ft.
Windrow Widths of 4 to 6 Ft.
Single Acting Cylinder with
  Hose and Hydraulic Coupler Included
Optional Center Kicker Wheel
Hitch Jack Doubles as
  Windrow Width Adjuster
Three Position Raking Width Adjustment
  with Turnbuckles for Fine Tuning
Adjustable Spring for
  Varying Rake Wheel Down Pressure
Dual Tapered Bearings in Rake Wheel Hubs
New ST175/80D13 Tires
Adjustable Hitch Clevis for
  Various Drawbar Heights
Optional Second Hose Kit with Coupler

CODE	ATTACHMENT IDENTIFIER	DESCRIPTION	SUGGESTED LIST PRICE USD ($)
		Select One Code From Each Required Category	
		BASE MACHINE	
0163XF		WR3012 Carted Wheel Rake *Raking widths of 20 to 24 Ft. Single hose and hydraulic coupler included.*	7,014.00
		CENTER KICKER WHEEL	
1000		Center Kicker Wheel	511.00
1010		Less Center Kicker Wheel	In Base Price
		ATTACHMENTS - ORDER AS DESIRED	
9000		Second Hose Kit with Coupler *Includes coupler.*	55.00
		ATTACHMENTS FOR FIELD CONVERSION	
		Miscellaneous:	
	5HPCRO1	Center Kicker Wheel	551.88
	5HPCRO2	Second Hose Kit *Includes coupler.*	61.60

THIS PAGE IS INTENTIONALLY LEFT BLANK

WR3310 Overhead Frame Wheel Rake

Equipment for Base Machine

Overhead Frame Design Handles High Volume of Crop and Gives You a Maneuverable Rake with a Short Turning Radius
WR33 Series Rakes Feature Seven Position Manually Adjustable Beam Angle with Optional Hydraulic Angle Adjustment
One Sided Raking with Either Side (Hydraulic Angle Adjustment Allows You to Control Each Side Independently)
Variable Width Hydraulic Main Frame Adjustment Allows You to Control Windrow Width
Screw Adjustment to Control Rake Wheel Ground Pressure
Ratchet Jack Gives You Hitch Height and Beam Fore and Aft Tilt Adjustment
100 Percent Coverage Y-rake Configuration with WR3313 and WR3315, No Center Kicker Needed
Transport Lights, SMV, and Safety Tow Chain are Standard Equipment
1 Year Parts and Labor Warranty

CODE	ATTACHMENT IDENTIFIER	DESCRIPTION	SUGGESTED LIST PRICE USD ($)

Select One Code From Each Required Category

BASE MACHINE

0171XF		WR3310 Overhead Frame Wheel Rake *Raking width up to 22 Ft., windrow width up to 46 In.*	18,267.00

ATTACHMENTS FOR FIELD CONVERSION

		Miscellaneous:	
	5HPXOHYD	Hydraulic Rake Arm Opening	1,709.64
	5HPBFO7	One Wind Panel with Hardware	90.72
	5HPXOTDMWFLD	Tandem Wheel Kit, Field Installed, 17580D13 Tires	1,364.04

WR3310 Overhead Frame Wheel Rake
Continued

THIS PAGE IS INTENTIONALLY LEFT BLANK

WR3312 Overhead Frame Wheel Rake

Equipment for Base Machine

Overhead Frame Design Handles High Volume of Crop and Gives You a Maneuverable Rake with a Short Turning Radius
WR33 Series Rakes Feature Seven Position Manually Adjustable Beam Angle with Optional Hydraulic Angle Adjustment
One Sided Raking with Either Side (Hydraulic Angle Adjustment Allows You to Control Each Side Independently)
Variable Width Hydraulic Main Frame Adjustment Allows You to Control Windrow Width
Screw Adjustment to Control Rake Wheel Ground Pressure
Ratchet Jack Gives You Hitch Height and Beam Fore and Aft Tilt Adjustment
100 Percent Coverage Y-rake Configuration with WR3313 and WR3315, No Center Kicker Needed
Transport Lights, SMV, and Safety Tow Chain are Standard Equipment
1 Year Parts and Labor Warranty

CODE	ATTACHMENT IDENTIFIER	DESCRIPTION	SUGGESTED LIST PRICE USD ($)

Select One Code From Each Required Category

BASE MACHINE

0172XF		WR3312 Overhead Frame Wheel Rake *Raking width up to 25 Ft., windrow width up to 46 In.*	19,283.00

ATTACHMENTS FOR FIELD CONVERSION

		Miscellaneous:	
	5HPXOHYD	Hydraulic Rake Arm Opening	1,709.64
	5HPBFO7	One Wind Panel with Hardware	90.72
	5HPX2	Two Wheel Front Extension Kit	1,248.48

WR3312 Overhead Frame Wheel Rake
Continued

THIS PAGE IS INTENTIONALLY LEFT BLANK

WR3313 Overhead Frame Wheel Rake

Equipment for Base Machine

Overhead Frame Design Handles High Volume of Crop and Gives You a Maneuverable Rake with a Short Turning Radius
WR33 Series Rakes Feature Seven Position Manually Adjustable Beam Angle with Optional Hydraulic Angle Adjustment
One Sided Raking with Either Side (Hydraulic Angle Adjustment Allows You to Control Each Side Independently)
Variable Width Hydraulic Main Frame Adjustment Allows You to Control Windrow Width
Screw Adjustment to Control Rake Wheel Ground Pressure
Ratchet Jack Gives You Hitch Height and Beam Fore and Aft Tilt Adjustment
100 Percent Coverage Y-rake Configuration with WR3313 and WR3315, No Center Kicker Needed
Transport Lights, SMV, and Safety Tow Chain are Standard Equipment
1 Year Parts and Labor Warranty

CODE	ATTACHMENT IDENTIFIER	DESCRIPTION	SUGGESTED LIST PRICE USD ($)

Select One Code From Each Required Category

BASE MACHINE

0173XF		WR3313 Overhead Frame Wheel Rake *Raking width up to 22 Ft., windrow width up to 46 In.*	19,951.00

ATTACHMENTS FOR FIELD CONVERSION

		Miscellaneous:	
	5HPXOHYD	Hydraulic Rake Arm Opening	1,709.64
	5HPBFO7	One Wind Panel with Hardware	90.72
	5HPX3	Three Wheel Right Rear Extension Kit	1,921.32

WR3313 Overhead Frame Wheel Rake
Continued

THIS PAGE IS INTENTIONALLY LEFT BLANK

WR3315 Overhead Frame Wheel Rake

Equipment for Base Machine

Overhead Frame Design Handles High Volume of Crop and Gives You a Maneuverable Rake with a Short Turning Radius
WR33 Series Rakes Feature Seven Position Manually Adjustable Beam Angle with Optional Hydraulic Angle Adjustment
One Sided Raking with Either Side (Hydraulic Angle Adjustment Allows You to Control Each Side Independently)
Variable Width Hydraulic Main Frame Adjustment Allows You to Control Windrow Width
Screw Adjustment to Control Rake Wheel Ground Pressure
Ratchet Jack Gives You Hitch Height and Beam Fore and Aft Tilt Adjustment
100 Percent Coverage Y-rake Configuration with WR3313 and WR3315, No Center Kicker Needed
Transport Lights, SMV, and Safety Tow Chain are Standard Equipment
1 Year Parts and Labor Warranty

CODE	ATTACHMENT IDENTIFIER	DESCRIPTION	SUGGESTED LIST PRICE USD ($)

Select One Code From Each Required Category

BASE MACHINE

0174XF		WR3315 Overhead Frame Wheel Rake *Raking width up to 25 Ft., windrow width up to 46 In.*	21,140.00

ATTACHMENTS FOR FIELD CONVERSION

		Miscellaneous:	
	5HPXOHYD	Hydraulic Rake Arm Opening	1,709.64
	5HPBFO7	One Wind Panel with Hardware	90.72
	5HPX3	Three Wheel Right Rear Extension Kit	1,921.32
	5HPX2	Two Wheel Front Extension Kit	1,248.48

WR3315 Overhead Frame Wheel Rake
Continued

THIS PAGE IS INTENTIONALLY LEFT BLANK

WR3414 Heavy Duty Overhead Frame Wheel Rake

Equipment for Base Machine

Overhead Frame Design Handles High Volume of Crop and Gives You a Maneuverable Rake with a Short Turning Radius
WR34 Series Rakes Feature Five Position Manually Adjustable Beam Angle with Optional Hydraulic Angle Adjustment
One Sided Raking with Either Side (Hydraulic Angle Adjustment Allows You to Control Each Side Independently)
Variable Width Hydraulic Main Frame Adjustment Allows You to Control Windrow Width
Screw Adjustment to Control Rake Wheel Ground Pressure
Ratchet Jack Gives You Hitch Height and Beam Fore and Aft Tilt Adjustment
100 Percent Coverage Y-rake Configuration with WR3417 and WR3419, No Center Kicker Needed
Transport Lights, SMV, and Safety Tow Chain are Standard Equipment
1 Year Parts and Labor Warranty

CODE	ATTACHMENT IDENTIFIER	DESCRIPTION	SUGGESTED LIST PRICE USD ($)

Select One Code From Each Required Category

BASE MACHINE

0181XF		WR3414 Heavy Duty Overhead Frame Wheel Rake *Raking width up to 31 Ft., windrow width up to 94 In.*	28,662.00

ATTACHMENTS FOR FIELD CONVERSION

		Miscellaneous:	
	5HPHDXOHYD	Hydraulic Rake Arm Opening	2,058.48
	5HPBFO760	Wind Panel Kit for One Wheel (WR34 Series)	90.72

WR3414 Heavy Duty Overhead Frame Wheel Rake
Continued

THIS PAGE IS INTENTIONALLY LEFT BLANK

WR3416 Heavy Duty Overhead Frame Wheel Rake

Equipment for Base Machine

Overhead Frame Design Handles High Volume of Crop and Gives You a Maneuverable Rake with a Short Turning Radius
WR34 Series Rakes Feature Five Position Manually Adjustable Beam Angle with Optional Hydraulic Angle Adjustment
One Sided Raking with Either Side (Hydraulic Angle Adjustment Allows You to Control Each Side Independently)
Variable Width Hydraulic Main Frame Adjustment Allows You to Control Windrow Width
Screw Adjustment to Control Rake Wheel Ground Pressure
Ratchet Jack Gives You Hitch Height and Beam Fore and Aft Tilt Adjustment
100 Percent Coverage Y-rake Configuration with WR3417 and WR3419, No Center Kicker Needed
Transport Lights, SMV, and Safety Tow Chain are Standard Equipment
1 Year Parts and Labor Warranty

CODE	ATTACHMENT IDENTIFIER	DESCRIPTION	SUGGESTED LIST PRICE USD ($)

Select One Code From Each Required Category

BASE MACHINE

0182XF		WR3416 Heavy Duty Overhead Frame Wheel Rake *Raking width up to 34 Ft. 6 In., windrow width up to 94 In.*	29,504.00

ATTACHMENTS FOR FIELD CONVERSION

		Miscellaneous:	
	5HPHDXOHYD	Hydraulic Rake Arm Opening	2,058.48
	5HPHDX2	Two Wheel Front Extension Kit	1,773.36
	5HPBFO760	Wind Panel Kit for One Wheel (WR34 Series)	90.72

WR3416 Heavy Duty Overhead Frame Wheel Rake
Continued

THIS PAGE IS INTENTIONALLY LEFT BLANK

WR3417 Heavy Duty Overhead Frame Wheel Rake

Equipment for Base Machine

Overhead Frame Design Handles High Volume of Crop and Gives You a Maneuverable Rake with a Short Turning Radius
WR34 Series Rakes Feature Five Position Manually Adjustable Beam Angle with Optional Hydraulic Angle Adjustment
One Sided Raking with Either Side (Hydraulic Angle Adjustment Allows You to Control Each Side Independently)
Variable Width Hydraulic Main Frame Adjustment Allows You to Control Windrow Width
Screw Adjustment to Control Rake Wheel Ground Pressure
Ratchet Jack Gives You Hitch Height and Beam Fore and Aft Tilt Adjustment
100 Percent Coverage Y-rake Configuration with WR3417 and WR3419, No Center Kicker Needed
Transport Lights, SMV, and Safety Tow Chain are Standard Equipment
1 Year Parts and Labor Warranty

CODE	ATTACHMENT IDENTIFIER	DESCRIPTION	SUGGESTED LIST PRICE USD ($)

Select One Code From Each Required Category

BASE MACHINE

0183XF		WR3417 Heavy Duty Overhead Frame Wheel Rake *Raking width up to 31 Ft., windrow width up to 94 In.*	29,978.00

ATTACHMENTS FOR FIELD CONVERSION

		Miscellaneous:	
	5HPHDXOHYD	Hydraulic Rake Arm Opening	2,058.48
	5HPHDX3	Three Wheel Right Rear Extension Kit	2,220.48
	5HPBFO760	Wind Panel Kit for One Wheel (WR34 Series)	90.72

WR3417 Heavy Duty Overhead Frame Wheel Rake
Continued

THIS PAGE IS INTENTIONALLY LEFT BLANK

WR3419 Heavy Duty Overhead Frame Wheel Rake

Equipment for Base Machine

Overhead Frame Design Handles High Volume of Crop and Gives You a Maneuverable Rake with a Short Turning Radius
WR34 Series Rakes Feature Five Position Manually Adjustable Beam Angle with Optional Hydraulic Angle Adjustment
One Sided Raking with Either Side (Hydraulic Angle Adjustment Allows You to Control Each Side Independently)
Variable Width Hydraulic Main Frame Adjustment Allows You to Control Windrow Width
Screw Adjustment to Control Rake Wheel Ground Pressure
Ratchet Jack Gives You Hitch Height and Beam Fore and Aft Tilt Adjustment
100 Percent Coverage Y-rake Configuration with WR3417 and WR3419, No Center Kicker Needed
Transport Lights, SMV, and Safety Tow Chain are Standard Equipment
1 Year Parts and Labor Warranty

CODE	ATTACHMENT IDENTIFIER	DESCRIPTION	SUGGESTED LIST PRICE USD ($)

Select One Code From Each Required Category

BASE MACHINE

0184XF		WR3419 Heavy Duty Overhead Frame Wheel Rake *Raking width up to 34 Ft. 6 In., windrow width up to 94 In.*	31,774.00

ATTACHMENTS FOR FIELD CONVERSION

		Miscellaneous:	
	5HPHDXOHYD	Hydraulic Rake Arm Opening	2,058.48
	5HPHDX3	Three Wheel Right Rear Extension Kit	2,220.48
	5HPHDX2	Two Wheel Front Extension Kit	1,773.36
	5HPBFO760	Wind Panel Kit for One Wheel (WR34 Series)	90.72

WR3419 Heavy Duty Overhead Frame Wheel Rake
Continued

THIS PAGE IS INTENTIONALLY LEFT BLANK

WR4106 Standard Duty Inline Wheel Rake with 6 Wheels

Equipment for Base Machine

Rake Wheel Diameter:
55 In. (1397 mm)
Teeth Per Wheel: 40
Tooth Diameter:
7 mm (0.2756 In.)
Transport Width:
8 Ft. (2.4 m)
Transport Length:
22 Ft. (6.7 m)
Raking Width:
13 Ft. 8 In. Maximum (4.2 m)
Raking Wheel Hubs: Ball Bearing

Number of Transport Wheels: 3
Optional Tandem Ground Wheels
Number of Raking Wheels: 6
Transport Wheels: 175/70-15
Hitch Jack: Standard

CODE	ATTACHMENT IDENTIFIER	DESCRIPTION	SUGGESTED LIST PRICE USD ($)
		Select One Code From Each Required Category	
		BASE MACHINE	
0221XF		WR4106 Standard Duty Inline Wheel Rake with 6 Wheels	5,686.00
		ATTACHMENTS - ORDERED AS DESIRED	
9010		Wind Panels with Hardware *Quantity of 6.*	246.00
9200		French Operators Manual and Decal Kit (WR4106 and WR4109)	No Charge
		ATTACHMENTS FOR FIELD CONVERSION	
		Miscellaneous:	
	5TNC10D0004	French Operators Manual and Decal Kit (WR4106 and WR4109)	See Parts
	5TN90399247	Wind Panel with Hardware (WR10, WR21, WR22, WR23, WR41, and WR43 Series)	45.92

WR4106 Standard Duty Inline Wheel Rake with 6 Wheels
Continued

THIS PAGE IS INTENTIONALLY LEFT BLANK

WR4109 Standard Duty Inline Wheel Rake with 9 Wheels

Equipment for Base Machine

Rake Wheel Diameter:
55 In. (1397 mm)
Teeth Per Wheel: 40
Tooth Diameter:
7 mm (0.2756 In.)
Transport Width:
8 Ft. (2.4 m)
Transport Length:
30 Ft. 3 In. (9.2 m)
Raking Width:
20 Ft. 2 In. Maximum (6.1 m)
Raking Wheel Hubs: Ball Bearing

Number of Transport Wheels: 3
Optional Tandem Ground Wheels
Number of Raking Wheels: 9
Transport Wheels: 175/70-15
Hitch Jack: Standard

CODE	ATTACHMENT IDENTIFIER	DESCRIPTION	SUGGESTED LIST PRICE USD ($)
		Select One Code From Each Required Category	
		BASE MACHINE	
0222XF		WR4109 Standard Duty Inline Wheel Rake with 9 Wheels	6,755.00
		ATTACHMENTS - ORDERED AS DESIRED	
9010		Wind Panels with Hardware *Quantity of 9.*	369.00
9200		French Operators Manual and Decal Kit (WR4106 and WR4109)	No Charge
		ATTACHMENTS FOR FIELD CONVERSION	
		Miscellaneous:	
	5TNC10D0004	French Operators Manual and Decal Kit (WR4106 and WR4109)	See Parts
	5TN90399247	Wind Panel with Hardware (WR10, WR21, WR22, WR23, WR41, and WR43 Series)	45.92

WR4109 Standard Duty Inline Wheel Rake with 9 Wheels
Continued

THIS PAGE IS INTENTIONALLY LEFT BLANK

WR4313 Heavy Duty Inline Wheel Rake with 13 Wheels

Equipment for Base Machine

Rake Wheel Diameter:
55 In. (1397 mm)
Teeth Per Wheel: 40
Tooth Diameter:
7 mm (0.2756 In.)
Transport Width:
8 Ft. 4 In. (2.5 m)
Transport Length:
37 Ft. 5 In. (11.4 m)
Raking Width:
28 Ft. 4 In. Maximum (8.6 m)
Raking Wheel Hubs: Ball Bearing

Number of Transport Wheels: 4
Optional Tandem Ground Wheels
Number of Raking Wheels: 13
Transport Wheels: 175/70-16
Hitch Jack: Standard
Hydraulic Fold on First 2 Raking Wheels

CODE	ATTACHMENT IDENTIFIER	DESCRIPTION	SUGGESTED LIST PRICE USD ($)
		Select One Code From Each Required Category	
		BASE MACHINE	
0231XF		WR4313 Heavy Duty Inline Wheel Rake with 13 Wheels	13,794.00
		ATTACHMENTS - ORDERED AS DESIRED	
9010		Wind Panels with Hardware *Quantity of 13.*	533.00
9200		French Operators Manual and Decal Kit (WR4313)	No Charge
		ATTACHMENTS FOR FIELD CONVERSION	
		Miscellaneous:	
	5TNC10D0005	French Operators Manual and Decal Kit (WR4313)	See Parts
	5TN90399247	Wind Panel with Hardware (WR10, WR21, WR22, WR23, WR41, and WR43 Series)	45.92

WR4313 Heavy Duty Inline Wheel Rake with 13 Wheels
Continued

THIS PAGE IS INTENTIONALLY LEFT BLANK

WR5417 High Capacity Wheel Rake

Equipment for Base Machine

Number of Wheels: 17
Teeth per Wheel: 36
Tooth Diameter: 7 mm
Wheel Diameter: 60 in.
Transport Width: 12 ft. 4 in.
Transport Length: 28 ft. 4 in.
Raking Width: 29 ft.
Windrow Width Adjustment:
  Maximum Finished Windrow Width 72.3 in.
Raking Wheel Hubs: Tapered Bearings
Wing Flex: None
Number of Transport Wheels: 4
Hitch Jack: Standard

Tandem Rear Wheels: Standard
Transport Wheels: 9.5L x 15
Gauge Wheels: None
Assembly/Set-Up Time:
  6 Hours (2 Personnel)
Weight: 5900 lbs.

CODE	ATTACHMENT IDENTIFIER	DESCRIPTION	SUGGESTED LIST PRICE USD ($)
		Select One Code From Each Required Category	
		BASE MACHINE	
0311XF		WR5417 High Capacity Wheel Rake *Includes Transport Lights. Raking widths up to 29 Ft.*	30,215.00
		SPECIAL EQUIPMENT - FACTORY INSTALLED	
8000		WR5417 Open Center Kit	438.00
8010		WR5417 Bi-Direct Springs	1,800.00
		ATTACHMENTS - ORDERED AS DESIRED	
9200		French Operators Manual and Decal Kit (WR5417)	No Charge
		ATTACHMENTS FOR FIELD CONVERSION	
		Miscellaneous:	
	5PQ903186	French Operators Manual and Decal Kit (WR5417)	44.80
	5PQ507342	WR5417 Bi-Direct Springs	1,944.00
	5PQ507218	WR5417 Open Center Kit	473.04

THIS PAGE IS INTENTIONALLY LEFT BLANK

RR1012E Economy Rotary Rake

Equipment for Base Machine

Hitch Type: Drawbar
Working Width:
  11 Ft. 8 In. (3.6 m)
Transport Width:
  7 Ft. 6 In. (2.3 m)
Number of Tine Arms: 9
Number of Double Tines per Arm: 4
Tires: 15 x 6.00-6
PTO with Torque Limiter: Standard

Tractor PTO HP Requirement:
  Minimum 20 HP
PTO Speed: 540 RPM

CODE	ATTACHMENT IDENTIFIER	DESCRIPTION	SUGGESTED LIST PRICE USD ($)
		Select One Code From Each Required Category	
		BASE MACHINE	
0041XF		RR1012E Economy Rotary Rake	7,080.00
		ATTACHMENTS - ORDER AS DESIRED	
9200		French Operators Manual and Decal Kit RR1012E Rotary Rake	No Charge
		ATTACHMENTS FOR FIELD CONVERSION	
		Miscellaneous:	
	5TNC10D0003	French Operators Manual and Decal Kit (RR1012E) *Destination of Quebec only. Includes French safety decals and manual.*	See Parts

RR1012E Economy Rotary Rake
Continued

THIS PAGE IS INTENTIONALLY LEFT BLANK

RR2109 - 9 Ft. Raking Width Rotary Rake

Equipment for Base Machine

```
Tandem Axles With Four Bolt Wheels
Exclusive Level-Lift Hydraulics
Totally Enclosed Oil Bath Gearbox
Heat Treated, Double-Tooth
  Spring Steel Tines
Safety Tow Chain is Standard Equipment
1 Year Parts and Labor Warranty
```

CODE	ATTACHMENT IDENTIFIER	DESCRIPTION	SUGGESTED LIST PRICE USD ($)
		Select One Code From Each Required Category	
		BASE MACHINE	
0131XF		RR2109 - 9 Ft. Raking Width Rotary Rake	8,189.00
		ATTACHMENTS - ORDER AS DESIRED	
9200		French Operators Manual and Decal Kit RR2109 Rotary Rake	No Charge
		ATTACHMENTS FOR FIELD CONVERSION	
		Miscellaneous:	
	5PQ903180	French Operators Manual & Decal Kit (RR2109) Rotary Rake *Destination of Quebec only. Includes French safety decals and manual.*	44.80

RR2109 - 9 Ft. Raking Width Rotary Rake
Continued

THIS PAGE IS INTENTIONALLY LEFT BLANK

RR2211 - 11 Ft. Raking Width Rotary Rake

Equipment for Base Machine

```
Tandem Axles With Four Bolt Wheels
Exclusive Level-Lift Hydraulics
Totally Enclosed Oil Bath Gearbox
Heat Treated, Double-Tooth
  Spring Steel Tines
Safety Tow Chain is Standard Equipment
1 Year Parts and Labor Warranty
```

CODE	ATTACHMENT IDENTIFIER	DESCRIPTION	SUGGESTED LIST PRICE USD ($)
		Select One Code From Each Required Category	
		BASE MACHINE	
0141XF		RR2211 - 11 Ft. Raking Width Rotary Rake	10,217.00
		ATTACHMENTS - ORDER AS DESIRED	
9200		French Operators Manual and Decal Kit RR2211 Rotary Rake	No Charge
		ATTACHMENTS FOR FIELD CONVERSION	
		Miscellaneous:	
	5PQ903181	French Operators Manual & Decal Kit (RR2211) Rotary Rake *Destination of Quebec only. Includes French safety decals and manual.*	44.80

RR2211 - 11 Ft. Raking Width Rotary Rake
Continued

THIS PAGE IS INTENTIONALLY LEFT BLANK

RR2313 - 13 Ft. Raking Width Rotary Rake

Equipment for Base Machine

13 ft. Clean sweep raking width
15 ft. Working width
8 ft. 2 in. Transport width
6 ft. 6 in. Transport height
Tandem walking beam axles with 18.5 in. wheels
Removable rotor arms for easy storage and narrow transport
Stub shafts removable w/o disassembling gearbox
Oversized swivel gearbox
Standard hydraulic rear curtain
4 Heat treated, double-tooth spring steel tines per arm
13 Tine arms per rotor
Safety tow chain standard

CODE	ATTACHMENT IDENTIFIER	DESCRIPTION	SUGGESTED LIST PRICE USD ($)
		Select One Code From Each Required Category	
		BASE MACHINE	
0301XF		RR2313 - 13 Ft. Raking Width Rotary Rake	16,188.00
		EXTRA FLOTATION TIRES	
1095		Less Extra Flotation Tires	In Base Price
1010		Extra Flotation Tires (RR2313) *Note: Includes 2 additional flotation tires and 2 spindles for mounting to front of each walking beam.*	351.00
		ATTACHMENTS - ORDER AS DESIRED	
9200		French Operators Manual and Decal Kit RR2313 Rotary Rake	No Charge
		ATTACHMENTS FOR FIELD CONVERSION	
		Miscellaneous:	
	5PQ580035	Extra Flotation Tires (RR2313) *Note: Includes 2 additional flotation tires and 2 spindles for mounting to front of each walking beam.*	379.08
	5PQ903187	French Operators Manual & Decal Kit (RR2313) Rotary Rake *Destination of Quebec only. Includes French safety decals and manual.*	44.80

RR2313 - 13 Ft. Raking Width Rotary Rake
Continued

THIS PAGE IS INTENTIONALLY LEFT BLANK

HM1109 Standard Hay Merger

Equipment for Base Machine

```
Pickup Width: 9 Ft.
Base Unit Width: 14 Ft. 4 In.
Base Unit Height: 4 Ft. 6 In.
Base Unit Length: 19 Ft. 3 In.
Unit Width with
  Optional Accelerator Roller:
    15 Ft. 9 In.
  Optional 2 Ft. Conveyor Extension
    (Fixed): 16 Ft. 4 In.
  Optional 2 Ft. Extension Unfolded: N/A
  Optional 4 Ft. Extension Unfolded: N/A
  Optional 6 Ft. Extension Unfolded: N/A
  Optional Extension Folded: N/A
Base Unit Length
  Pole Swung In: N/A
  Pole Swung Out: N/A
Base Unit Weight
  Standard Unit: 2970 lbs.
  Self Contained Unit: 3380 lbs.
Tire Size (Frame): (2) 6.70 x 15
Tire Size (Pickup): (2) 5.70 x 8
Replaceable Three Prong Plastic Teeth: Yes
Cross Conveyor Width: 42 In.
Tractor Size and Hydraulic Capacity Required
  Standard Unit:
    MINIMUM - 70 HP with 16 GPM/2000 PSI
  Self Contained Unit:
    MINIMUM - 70 HP with 5 GPM/2000 PSI
Hydraulic Remotes Needed
  Standard Unit: 2
  Self Contained Unit: 1
Approximate Set-Up Times
  Standard Unit: 1.5
  Self Contained Unit: 2

Extension Length for Harvester with
Narrow (3.0 Meter) Pick-up Head:
  Cut Width of 9 Ft. - 10 Ft.:
    No extension required
  Cut Width of 12 Ft.:
    No extension required
  Cut Width of 14 Ft.:
    2 Ft. or Accelerator Roller
  Cut Width of 16 Ft.: N/A
  Cut Width of 18 Ft.: N/A

Extension Length for Harvester with
Wide (4.5 Meter) Pick-up Head:
  Cut Width of 14 Ft.: N/A
  Cut Width of 16 Ft.: N/A
  Cut Width of 18 Ft.: N/A
```

CODE	ATTACHMENT IDENTIFIER	DESCRIPTION	SUGGESTED LIST PRICE USD ($)

Select One Code From Each Required Category

BASE MACHINE

0021XF		HM1109 Standard Hay Merger *9 Ft. Head. Includes rolling crop deflector, but does NOT include wind apron, which is no longer necessary.*	23,177.00

PTO HYDRAULIC DRIVE

1000		PTO Hydraulic Drive *Self contained pump and reservoir.*	3,530.00
1095		Less PTO Hydraulic Drive	In Base Price

CONVEYOR EXTENSION

2002		Conveyor Extension *2 Ft. fixed (non-folding).*	961.00
2095		Less Conveyor Extension	In Base Price

ATTACHMENTS - ORDER AS DESIRED

9020		Accelerator Roller *For merging up to 14 Ft. cuts of hay or creating windrows up to 9 Ft. apart.*	1,150.00
9200		French Operators Manual & Decals HM11 Series Hay Mergers	No Charge

HM1109 Standard Hay Merger

Continued

CODE	ATTACHMENT IDENTIFIER	DESCRIPTION	SUGGESTED LIST PRICE USD ($)
		ATTACHMENTS FOR FIELD CONVERSION	
		Miscellaneous:	
	5HPMMO1	Accelerator Roller *For merging up to 14 Ft. cuts of hay or creating windrows up to 9 Ft. apart.*	1,242.00
	5HPMMO4	Conveyor Extension	1,037.88
	5HP1108FKM11	French Operators Manual & Decals HM11 Series Hay Mergers	43.46
	5HPMMO5	PTO Hydraulic Drive (HM1109)	3,443.04

HM1209 Hydra-Swing Merger

Equipment for Base Machine

```
Pickup Width: 9 Ft.
Base Unit Width: 14 Ft. 4 In.
Base Unit Height: 5 Ft. 3 In.
Base Unit Length: N/A
Unit Width with
  Optional Accelerator Roller: N/A
  Optional 2 Ft. Conveyor Extension
    (Fixed): N/A
  Optional 2 Ft. Extension Unfolded:
    16 Ft. 4 In.
  Optional 4 Ft. Extension Unfolded:
    18 Ft. 4 In.
  Optional 6 Ft. Extension Unfolded:
    20 Ft. 4 In.
  Optional Extension Folded:
    14 Ft. 10 In.
Base Unit Length
  Pole Swung In: 22 Ft.
  Pole Swung Out: 21 Ft.
Base Unit Weight
  Standard Unit: 3095 lbs.
  Self Contained Unit: 3515 lbs.
Tire Size (Frame):
  (1) 6.70 x 15 and (2) 9.5L x 15
Tire Size (Pickup):
  (2) 5.70 x 8
Replaceable Three Prong Plastic Teeth: Yes
Cross Conveyor Width: 42 In.
Tractor Size and Hydraulic Capacity Required
  Standard Unit:
    MINIMUM - 70 HP with 16 GPM/2000 PSI
Tractor Size and Hydraulic Capacity Required
  Self Contained Unit:
    MINIMUM - 70 HP with 5 GPM/2000 PSI
Hydraulic Remotes Needed
  Standard Unit: 2
  Self Contained Unit: 1
Approximate Set-Up Times
  Standard Unit: 2.5
  Self Contained Unit: 3

Extension Length for Harvester with
Narrow (3.0 Meter) Pick-up Head:
  Cut Width of 9 Ft. - 10 Ft.: N/A
  Cut Width of 12 Ft.:
    No extension required
  Cut Width of 14 Ft.: 2 Ft.
  Cut Width of 16 Ft.: 4 Ft.
  Cut Width of 18 Ft.: 6 Ft.

Extension Length for Harvester with
Wide (4.5 Meter) Pick-up Head:
  Cut Width of 14 Ft.:
    No Extension Required
  Cut Width of 16 Ft.: 2 Ft.
  Cut Width of 18 Ft.: 4 Ft.
```

CODE	ATTACHMENT IDENTIFIER	DESCRIPTION	SUGGESTED LIST PRICE USD ($)

Select One Code From Each Required Category

BASE MACHINE

0031XF	HM1209 Hydra-Swing Merger *9 Ft. Head. Includes rolling crop deflector, but does NOT include wind apron, which is no longer necessary.*	30,225.00

PTO HYDRAULIC DRIVE

1000	PTO Hydraulic Drive *Self contained pump and reservoir.*	3,943.00
1095	Less PTO Hydraulic Drive	In Base Price

CONVEYOR EXTENSION

2002	2 Ft. Folding Conveyor Extension	3,669.00
2004	4 Ft. Folding Conveyor Extension	4,061.00
2006	6 Ft. Folding Conveyor Extension	4,504.00
2095	Less Conveyor Extension	In Base Price

ATTACHMENTS - ORDER AS DESIRED

HM1209 Hydra-Swing Merger
Continued

CODE	ATTACHMENT IDENTIFIER	DESCRIPTION	SUGGESTED LIST PRICE USD ($)
		ATTACHMENTS - ORDER AS DESIRED ...Continued...	
9000		Cross Conveyor Shut-Off	956.00
9010		Windrow Inverter (HM12 Series Hay Mergers) *Left hand discharge.*	201.00
9200		French Operators Manual & Decals HM12 Series Hay Mergers	No Charge
		ATTACHMENTS FOR FIELD CONVERSION	
		Miscellaneous:	
	5HPHSMO2	2 Ft. Folding Conveyor Extension	3,962.52
	5HPHSMO4	4 Ft. Folding Conveyor Extension	4,385.88
	5HPHSMO6	6 Ft. Folding Conveyor Extension	4,864.32
	5HPHSMOCSOK	Cross Conveyor Shut-Off	1,032.48
	5HP1108FKM12	French Operators Manual & Decals HM12 Series Hay Mergers	62.76
	5HPHSMO3	PTO Hydraulic Drive (HM12 Series Hay Merger)	4,258.44
	5HPHSMO1	Windrow Inverter HM12 Series Hay Mergers	217.08

HM1212 Hydra-Swing Merger

Equipment for Base Machine

```
Pickup Width: 12 Ft.
Base Unit Width: 15 Ft. 4 In.
Base Unit Height: 5 Ft. 3 In.
Base Unit Length: N/A
Unit Width with
  Optional Accelerator Roller: N/A
  Optional 2 Ft. Conveyor Extension
    (Fixed): N/A
  Optional 2 Ft. Extension Unfolded:
    17 Ft. 4 In.
  Optional 4 Ft. Extension Unfolded:
    19 Ft. 4 In.
  Optional 6 Ft. Extension Unfolded:
    21 Ft. 4 In.
  Optional Extension Folded:
    15 Ft. 10 In.
Base Unit Length
  Pole Swung In: 22 Ft.
  Pole Swung Out: 21 Ft.
Base Unit Weight
  Standard Unit: 4173 lbs.
  Self Contained Unit: 4593 lbs.
Tire Size (Frame):
  (1) 6.70 x 15 and (2) 9.5L x 15
Tire Size (Pickup):
  (2) 5.70 x 8
Replaceable Three Prong Plastic Teeth: Yes
Cross Conveyor Width: 42 In.
Tractor Size and Hydraulic Capacity Required
  Standard Unit:
    MINIMUM - 70 HP with 16 GPM/2000 PSI
Tractor Size and Hydraulic Capacity Required
  Self Contained Unit:
    MINIMUM - 70 HP with 5 GPM/2000 PSI
Hydraulic Remotes Needed
  Standard Unit: 2
  Self Contained Unit: 1
Approximate Set-Up Times
  Standard Unit: 2.5
  Self Contained Unit: 3

Extension Length for Harvester with
Narrow (3.0 Meter) Pick-up Head:
  Cut Width of 9 Ft. - 10 Ft.: N/A
  Cut Width of 12 Ft.:
    No extension required
  Cut Width of 14 Ft.: 2 Ft.
  Cut Width of 16 Ft.: 4 Ft.
  Cut Width of 18 Ft.: 6 Ft.

Extension Length for Harvester with
Wide (4.5 Meter) Pick-up Head:
  Cut Width of 14 Ft.:
    No Extension Required
  Cut Width of 16 Ft.: 2 Ft.
  Cut Width of 18 Ft.: 4 Ft.
```

CODE	ATTACHMENT IDENTIFIER	DESCRIPTION	SUGGESTED LIST PRICE USD ($)

Select One Code From Each Required Category

BASE MACHINE

0032XF	HM1212 Hydra-Swing Merger *12 Ft. head. Includes rolling crop deflector, but does NOT include wind apron, which is no longer necessary.*	34,509.00

PTO HYDRAULIC DRIVE

1000	PTO Hydraulic Drive *Self contained pump and reservoir.*	3,943.00
1095	Less PTO Hydraulic Drive	In Base Price

CONVEYOR EXTENSION

2002	2 Ft. Folding Conveyor Extension	3,669.00
2004	4 Ft. Folding Conveyor Extension	4,061.00
2006	6 Ft. Folding Conveyor Extension	4,504.00
2095	Less Conveyor Extension	In Base Price

ATTACHMENTS - ORDER AS DESIRED

HM1212 Hydra-Swing Merger
Continued

CODE	ATTACHMENT IDENTIFIER	DESCRIPTION	SUGGESTED LIST PRICE USD ($)
		ATTACHMENTS - ORDER AS DESIRED ...Continued...	
9000		Cross Conveyor Shut-Off	956.00
9010		Windrow Inverter (HM12 Series Hay Mergers) *Left hand discharge.*	201.00
9200		French Operators Manual & Decals HM12 Series Hay Mergers	No Charge
		ATTACHMENTS FOR FIELD CONVERSION	
		Miscellaneous:	
	5HPHSMO2	2 Ft. Folding Conveyor Extension	3,962.52
	5HPHSMO4	4 Ft. Folding Conveyor Extension	4,385.88
	5HPHSMO6	6 Ft. Folding Conveyor Extension	4,864.32
	5HPHSMOCSOK	Cross Conveyor Shut-Off	1,032.48
	5HP1108FKM12	French Operators Manual & Decals HM12 Series Hay Mergers	62.76
	5HPHSMO3	PTO Hydraulic Drive (HM12 Series Hay Merger)	4,258.44
	5HPHSMO1	Windrow Inverter HM12 Series Hay Mergers	217.08

BU1060 Bale Unroller

Equipment for Base Machine

3-Point Hitch Compatibility:
  Category I and II (iMatch and
  Quick Coupler - II and IIIN)
Framing: Tubular
Optional Hydraulics:
  2 In. x 8 In. Hydraulic Cylinder
Dimensions:
  24 In. H x 50 In. W x 53 In. L
Equipment Weight: 310 lb.

Bale Handling Capacity:
  One Large Round Bale (2000 lb. limit)

CODE	ATTACHMENT IDENTIFIER	DESCRIPTION	SUGGESTED LIST PRICE USD ($)

Select One Code From Each Required Category

BASE MACHINE

0011XF		BU1060 Bale Unroller	1,039.00

HYDRAULIC ACTUATION

1010		Hydraulic Kit to Actuate BU1060 Bale Unroller *Includes cylinder, hoses, and tips.*	349.00
1095		Less Hydraulic Actuation *2 In. x 8 In. hydraulic cylinder required with approximately 60 In. of 1/4 In. hose recommended.*	In Base Price

ATTACHMENTS FOR FIELD CONVERSION

		Miscellaneous:	
	5WS832135	Hydraulic Kit to Actuate Bale Unroller - Includes Cylinder, Hoses, and Tips (BU1060)	376.92

THIS PAGE IS INTENTIONALLY LEFT BLANK

BC1108 Bale Carrier - U.S.

Equipment for Base Machine

Handles bale sizes from 4' x 4' to 5' x 5' (diameter x width)
4' bale width - 8 bale capacity
5' bale width - 6 bale capacity
Complete self-loading and unloading operation
2 remote outlets required to operate
Comes complete with electric diverter valve for third function to operate unloading tilt cylinder
All wiring and hose couplers included
Heavy duty loading arm
Transport safety lights, SMV, reflectors
Double cylinders on tilt bed
(4) 12.5 x 15 12 ply tires
10' 5" wide
20' long plus extensions for end bale

CODE	ATTACHMENT IDENTIFIER	DESCRIPTION	SUGGESTED LIST PRICE USD ($)
		Select One Code From Each Required Category	
		BASE MACHINE	
0252XF		BC1108 Bale Carrier - U.S. *Includes rear extensions.*	25,468.00
		ATTACHMENTS - ORDER AS DESIRED	
9200		French Operators Manual & Decals BC1108 Bale Carrier	No Charge
		ATTACHMENTS FOR FIELD CONVERSION	
		Miscellaneous:	
	5TBBC118FROM	French Operators Manual & Decals BC1108 Bale Carrier	43.50

BC1108 Bale Carrier - U.S.
Continued

THIS PAGE IS INTENTIONALLY LEFT BLANK

BC1110 Bale Carrier - U.S.

Equipment for Base Machine

Handles bale sizes up to 6' x 6' (diameter x width)
6' bale width - 10 bale capacity
Complete self-loading and unloading operation
2 remote outlets required to operate
Comes complete with electric diverter valve for
third function to operate unloading tilt cylinder
All wiring and hose couplers included
Heavy duty loading arm
Transport safety lights, SMV, reflectors
Double cylinders on tilt bed

(4) 32/15.5x16.5 14ply Galaxy Tires
11' 11" wide
28' long plus extensions for end bale

CODE	ATTACHMENT IDENTIFIER	DESCRIPTION	SUGGESTED LIST PRICE USD ($)

Select One Code From Each Required Category

BASE MACHINE

0253XF		BC1110 Bale Carrier - U.S. *Includes rear extensions.*	30,166.00

ATTACHMENTS - ORDER AS DESIRED

9200		French Operators Manual & Decals BC1110 Bale Carrier	No Charge

ATTACHMENTS FOR FIELD CONVERSION

Miscellaneous:

	5TBBC110FROM	French Operators Manual & Decals BC1110 Bale Carrier	43.50

BC1110 Bale Carrier - U.S.
Continued

THIS PAGE IS INTENTIONALLY LEFT BLANK

BC1108 Bale Carrier - Canada

Equipment for Base Machine

Handles bale sizes from 4' x 4' to 5' x 5' (diameter x width)
4' bale width - 8 bale capacity
5' bale width - 6 bale capacity
Complete self-loading and unloading operation
2 remote outlets required to operate
Comes complete with electric diverter valve for third function to operate unloading tilt cylinder
All wiring and hose couplers included
Heavy duty loading arm
Transport safety lights, SMV, reflectors
Double cylinders on tilt bed
(4) 12.5 x 15 12 ply tires
10' 5" wide
20' long plus extensions for end bale

CODE	ATTACHMENT IDENTIFIER	DESCRIPTION	SUGGESTED LIST PRICE USD ($)
		Select One Code From Each Required Category	
		BASE MACHINE	
025BXF		BC1108 Bale Carrier - Canada *Includes rear extensions.*	25,621.00
		ATTACHMENTS - ORDER AS DESIRED	
9200		French Operators Manual & Decals BC1108 Bale Carrier	No Charge
		ATTACHMENTS FOR FIELD CONVERSION	
		Miscellaneous:	
	5TBBC118FROM	French Operators Manual & Decals BC1108 Bale Carrier	43.50

BC1108 Bale Carrier - Canada
Continued

THIS PAGE IS INTENTIONALLY LEFT BLANK

BC1110 Bale Carrier - Canada

Equipment for Base Machine

Handles bale sizes up to 6' x 6' (diameter x width)
6' bale width - 10 bale capacity
Complete self-loading and unloading operation
2 remote outlets required to operate
Comes complete with electric diverter valve for
third function to operate unloading tilt cylinder
All wiring and hose couplers included
Heavy duty loading arm
Transport safety lights, SMV, reflectors
Double cylinders on tilt bed

(4) 32/15.5x16.5 14ply Galaxy Tires
11' 11" wide
28' long plus extensions for end bale

CODE	ATTACHMENT IDENTIFIER	DESCRIPTION	SUGGESTED LIST PRICE USD ($)

Select One Code From Each Required Category

BASE MACHINE

025CXF		BC1110 Bale Carrier - Canada *Includes rear extensions.*	30,347.00

ATTACHMENTS - ORDER AS DESIRED

9200		French Operators Manual & Decals BC1110 Bale Carrier	No Charge

ATTACHMENTS FOR FIELD CONVERSION

Miscellaneous:

	5TBBC110FROM	French Operators Manual & Decals BC1110 Bale Carrier	43.50

BC1110 Bale Carrier - Canada
Continued

THIS PAGE IS INTENTIONALLY LEFT BLANK

LW1166 Inline Bale Wrapper - U.S.

Equipment for Base Machine

Fully automatic cycling
Electric start 13 HP Honda gas engine (18 amp charging system)
Spark arrester on engine
Low oil alert on engine
Transport safety lights, SMV, reflectors
Temperature gauge on hydraulic tank
Lock pin on hoop to reload plastic
Hydraulic steering
Electric hydraulic switch in control panel
Main control panel wired for field installed options
Hydraulic over center cam axle to pack bales tightly
Adjustable stroke length on charge table
2 - 30" pretensioners
Cross tube unloading (to push off last bale)
Adjustable length tongue
Automatically idles down when cycle completed
Safety shut off switch on guards
Guide rollers for side hill operation
Lug tires on rear axle

CODE	ATTACHMENT IDENTIFIER	DESCRIPTION	SUGGESTED LIST PRICE USD ($)
		Select One Code From Each Required Category	
		BASE MACHINE	
0261XF		LW1166 Inline Bale Wrapper - U.S. *Includes plastic sensor shutdown and guide rollers.*	36,299.00
		HYDRAULIC POWER DRIVE	
1010		Single Wheel Hydraulic Power Drive LW1166	815.00
1020		Dual Wheel Hydraulic Power Drive LW1166	1,635.00
1095		No Hydraulic Power Drive	In Base Price
		ENGINE	
2000		13 HP Honda Engine	In Base Price
2010		20 HP Honda Engine *Includes High Flow Pump for faster cycle times.*	3,000.00
		REMOTE CONTROL	
3010		Remote Steering and Shutdown	1,200.00
3095		No Remote Steering and Shutdown	In Base Price
		SPECIAL EQUIPMENT - FACTORY INSTALLED	
8010		Night Working Lights *Includes three lights.*	236.00
8030		Twin Wrap Kit *For double plastic.*	579.00
		ATTACHMENTS - ORDER AS DESIRED	

LW1166 Inline Bale Wrapper - U.S.

Continued

CODE	ATTACHMENT IDENTIFIER	DESCRIPTION	SUGGESTED LIST PRICE USD ($)
		ATTACHMENTS - ORDER AS DESIRED ...Continued...	
9000		Shielding *Order only for machines sold in Quebec.*	No Charge
		ATTACHMENTS FOR FIELD CONVERSION	
		Miscellaneous:	
	5TBHPDD5000F	LW11 Dual Wheel Hydraulic Power Drive	1,789.86
	5TBHPD5000F	LW11 Single Wheel Hydraulic Power Drive	891.26
	5TBNWLKF	LW11/LW12 Night Working Lights	257.94
	5TBRSSKX2HDF	LW11/LW12 Remote Steering and Shutdown	1,312.78
	5TBTWKF	LW11/LW12 Twin Wrap Kit	633.32
	5TBSSKF	Shielding *(Order only for machines sold into Quebec.)*	0.00

LW1266 Inline Bale Wrapper - U.S.

Equipment for Base Machine

Fully automatic cycling
Electric start 13 HP Honda gas engine (18 amp charging system)
Spark arrester on engine
Low oil alert on engine
Transport safety lights, SMV, reflectors
Temperature gauge on hydraulic tank
Lock pin on hoop to reload plastic
Roller bed rises for round to square bales
Hydraulic steering
Electric hydraulic switch in control panel
Main control panel wired for field installed options
Hydraulic over center cam axle to pack bales tightly
Adjustable stroke length on charge table
2 - 30" pretensioners
Cross tube unloading (to push off last bale)
Hydraulic lift ramp
Adjustable length tongue
Automatically idles down when cycle completed
Safety shut off switch on guards
Square bale riser bars
Lug tires on rear axle (when ordering hydraulic power drive)

CODE	ATTACHMENT IDENTIFIER	DESCRIPTION	SUGGESTED LIST PRICE USD ($)
		Select One Code From Each Required Category	
		BASE MACHINE	
0271XF		LW1266 Inline Bale Wrapper - U.S. *Includes plastic sensor shutdown.*	39,585.00
		HYDRAULIC POWER DRIVE	
1010		Single Wheel Hydraulic Power Drive LW1266	1,379.00
1020		Dual Wheel Hydraulic Power Drive LW1266	2,610.00
1095		No Hydraulic Power Drive	In Base Price
		ENGINE	
2000		13 HP Honda Engine	In Base Price
2010		20 HP Honda Engine *Includes High Flow Pump for faster cycle times.*	3,000.00
		REMOTE CONTROL	
3010		Remote Steering and Shutdown	1,200.00
3095		No Remote Steering and Shutdown	In Base Price
		SPECIAL EQUIPMENT - FACTORY INSTALLED	
8010		Night Working Lights *Includes three lights.*	236.00
8020		Guide Rollers *For side hill operation.*	477.00
8030		Twin Wrap Kit *For double plastic.*	579.00

LW1266 Inline Bale Wrapper - U.S.

Continued

CODE	ATTACHMENT IDENTIFIER	DESCRIPTION	SUGGESTED LIST PRICE USD ($)
		SPECIAL EQUIPMENT - FACTORY INSTALLED ...Continued...	
8040		Quick Start Power Jack *Includes fuel pump.*	989.00
		ATTACHMENTS - ORDER AS DESIRED	
9000		Shielding *Order only for machines sold in Quebec.*	No Charge
		ATTACHMENTS FOR FIELD CONVERSION	
		Miscellaneous:	
	5TBNWLKF	LW11/LW12 Night Working Lights	257.94
	5TBRSSKX2HDF	LW11/LW12 Remote Steering and Shutdown	1,312.78
	5TBTWKF	LW11/LW12 Twin Wrap Kit	633.32
	5TBHPDD5500F	LW12 Dual Wheel Hydraulic Power Drive	2,855.18
	5TBQSPJF	LW12 Quick Start Power Jack	1,082.10
	5TBGRF	LW12 Side Hill Guide Rollers	521.13
	5TBHPD5500F	LW12 Single Wheel Hydraulic Power Drive	1,508.85
	5TBSSKF	Shielding *(Order only for machines sold into Quebec.)*	0.00

LW1166 Inline Bale Wrapper - Canada

Equipment for Base Machine

Fully automatic cycling
Electric start 13 HP Honda gas engine (18 amp charging system)
Spark arrester on engine
Low oil alert on engine
Transport safety lights, SMV, reflectors
Temperature gauge on hydraulic tank
Lock pin on hoop to reload plastic
Hydraulic steering
Electric hydraulic switch in control panel
Main control panel wired for field installed options
Hydraulic over center cam axle to pack bales tightly
Adjustable stroke length on charge table
2 - 30" pretensioners
Cross tube unloading (to push off last bale)
Adjustable length tongue
Automatically idles down when cycle completed
Safety shut off switch on guards
Guide rollers for side hill operation
Lug tires on rear axle

CODE	ATTACHMENT IDENTIFIER	DESCRIPTION	SUGGESTED LIST PRICE USD ($)
		Select One Code From Each Required Category	
		BASE MACHINE	
026AXF		LW1166 Inline Bale Wrapper - Canada *Includes plastic sensor shutdown and guide rollers.*	36,516.00
		HYDRAULIC POWER DRIVE	
1010		Single Wheel Hydraulic Power Drive LW1166	820.00
1020		Dual Wheel Hydraulic Power Drive LW1166	1,645.00
1095		No Hydraulic Power Drive	In Base Price
		ENGINE	
2000		13 HP Honda Engine	In Base Price
2010		20 HP Honda Engine *Includes High Flow Pump for faster cycle times.*	3,000.00
		REMOTE CONTROL	
3010		Remote Steering and Shutdown	1,207.00
3095		No Remote Steering and Shutdown	In Base Price
		SPECIAL EQUIPMENT - FACTORY INSTALLED	
8010		Night Working Lights *Includes three lights.*	237.00
8030		Twin Wrap Kit *For double plastic.*	583.00
		ATTACHMENTS - ORDER AS DESIRED	

LW1166 Inline Bale Wrapper - Canada
Continued

CODE	ATTACHMENT IDENTIFIER	DESCRIPTION	SUGGESTED LIST PRICE USD ($)
		ATTACHMENTS - ORDER AS DESIRED ...Continued...	
9000		Shielding *Order only for machines sold in Quebec.*	No Charge
		ATTACHMENTS FOR FIELD CONVERSION	
		Miscellaneous:	
	5TBHPDD5000F	LW11 Dual Wheel Hydraulic Power Drive	1,789.86
	5TBHPD5000F	LW11 Single Wheel Hydraulic Power Drive	891.26
	5TBNWLKF	LW11/LW12 Night Working Lights	257.94
	5TBRSSKX2HDF	LW11/LW12 Remote Steering and Shutdown	1,312.78
	5TBTWKF	LW11/LW12 Twin Wrap Kit	633.32
	5TBSSKF	Shielding *(Order only for machines sold into Quebec.)*	0.00

LW1266 Inline Bale Wrapper - Canada

Equipment for Base Machine

Fully automatic cycling
Electric start 13 HP Honda gas engine (18 amp charging system)
Spark arrester on engine
Low oil alert on engine
Transport safety lights, SMV, reflectors
Temperature gauge on hydraulic tank
Lock pin on hoop to reload plastic
Roller bed rises for round to square bales
Hydraulic steering
Electric hydraulic switch in control panel
Main control panel wired for field installed options
Hydraulic over center cam axle to pack bales tightly
Adjustable stroke length on charge table
2 - 30" pretensioners
Cross tube unloading (to push off last bale)
Hydraulic lift ramp
Adjustable length tongue
Automatically idles down when cycle completed
Safety shut off switch on guards
Square bale riser bars
Lug tires on rear axle (when ordering hydraulic power drive)

CODE	ATTACHMENT IDENTIFIER	DESCRIPTION	SUGGESTED LIST PRICE USD ($)
		Select One Code From Each Required Category	
		BASE MACHINE	
027AXF		LW1266 Inline Bale Wrapper - Canada *Includes plastic sensor shutdown.*	39,822.00
		HYDRAULIC POWER DRIVE	
1010		Single Wheel Hydraulic Power Drive LW1266	1,387.00
1020		Dual Wheel Hydraulic Power Drive LW1266	2,625.00
1095		No Hydraulic Power Drive	In Base Price
		ENGINE	
2000		13 HP Honda Engine	In Base Price
2010		20 HP Honda Engine *Includes High Flow Pump for faster cycle times.*	3,000.00
		REMOTE CONTROL	
3010		Remote Steering and Shutdown	1,207.00
3095		No Remote Steering and Shutdown	In Base Price
		SPECIAL EQUIPMENT - FACTORY INSTALLED	
8010		Night Working Lights *Includes three lights.*	237.00
8020		Guide Rollers *For side hill operation.*	479.00
8030		Twin Wrap Kit *For double plastic.*	583.00

LW1266 Inline Bale Wrapper - Canada
Continued

CODE	ATTACHMENT IDENTIFIER	DESCRIPTION	SUGGESTED LIST PRICE USD ($)
		SPECIAL EQUIPMENT - FACTORY INSTALLED ...Continued...	
8040		Quick Start Power Jack *Includes fuel pump.*	995.00
		ATTACHMENTS - ORDER AS DESIRED	
9000		Shielding *Order only for machines sold in Quebec.*	No Charge
		ATTACHMENTS FOR FIELD CONVERSION	
		Miscellaneous:	
	5TBNWLKF	LW11/LW12 Night Working Lights	257.94
	5TBRSSKX2HDF	LW11/LW12 Remote Steering and Shutdown	1,312.78
	5TBTWKF	LW11/LW12 Twin Wrap Kit	633.32
	5TBHPDD5500F	LW12 Dual Wheel Hydraulic Power Drive	2,855.18
	5TBQSPJF	LW12 Quick Start Power Jack	1,082.10
	5TBGRF	LW12 Side Hill Guide Rollers	521.13
	5TBHPD5500F	LW12 Single Wheel Hydraulic Power Drive	1,508.85
	5TBSSKF	Shielding *(Order only for machines sold into Quebec.)*	0.00

LW1166 Inline Bale Wrapper - Quebec Only

Equipment for Base Machine

Fully automatic cycling
Electric start 13 HP Honda gas engine (18 amp charging system)
Spark arrester on engine
Low oil alert on engine
Transport safety lights, SMV, reflectors
Temperature gauge on hydraulic tank
Lock pin on hoop to reload plastic
Hydraulic steering
Electric hydraulic switch in control panel
Main control panel wired for field installed options
Hydraulic over center cam axle to pack bales tightly
Adjustable stroke length on charge table
2 - 30" pretensioners
Cross tube unloading (to push off last bale)
Adjustable length tongue
Automatically idles down when cycle completed
Safety shut off switch on guards
Guide rollers for side hill operation
Lug tires on rear axle

CODE	ATTACHMENT IDENTIFIER	DESCRIPTION	SUGGESTED LIST PRICE USD ($)
		Select One Code From Each Required Category	
		BASE MACHINE	
026BXF		LW1166 Inline Bale Wrapper - Quebec Only *Includes plastic sensor shutdown, guide rollers and enhanced shielding, and French Operator's Manual/Decals.*	36,516.00
		HYDRAULIC POWER DRIVE	
1010		Single Wheel Hydraulic Power Drive LW1166	820.00
1020		Dual Wheel Hydraulic Power Drive LW1166	1,645.00
1095		No Hydraulic Power Drive	In Base Price
		ENGINE	
2000		13 HP Honda Engine	In Base Price
2010		20 HP Honda Engine *Includes High Flow Pump for faster cycle times.*	3,000.00
		REMOTE CONTROL	
3010		Remote Steering and Shutdown	1,207.00
3095		No Remote Steering and Shutdown	In Base Price
		SPECIAL EQUIPMENT - FACTORY INSTALLED	
8010		Night Working Lights *Includes three lights.*	237.00
8030		Twin Wrap Kit *For double plastic.*	583.00
		ATTACHMENTS FOR FIELD CONVERSION	

LW1166 Inline Bale Wrapper - Quebec Only

Continued

CODE	ATTACHMENT IDENTIFIER	DESCRIPTION	SUGGESTED LIST PRICE USD ($)
		ATTACHMENTS FOR FIELD CONVERSION ...Continued...	
		Miscellaneous:	
	5TBHPDD5000F	LW11 Dual Wheel Hydraulic Power Drive	1,789.86
	5TBHPD5000F	LW11 Single Wheel Hydraulic Power Drive	891.26
	5TBNWLKF	LW11/LW12 Night Working Lights	257.94
	5TBRSSKX2HDF	LW11/LW12 Remote Steering and Shutdown	1,312.78
	5TBTWKF	LW11/LW12 Twin Wrap Kit	633.32

LW1266 Inline Bale Wrapper - Quebec Only

Equipment for Base Machine

Fully automatic cycling
Electric start 13 HP Honda gas engine (18 amp charging system)
Spark arrester on engine
Low oil alert on engine
Transport safety lights, SMV, reflectors
Temperature gauge on hydraulic tank
Lock pin on hoop to reload plastic
Roller bed rises for round to square bales
Hydraulic steering
Electric hydraulic switch in control panel
Main control panel wired for field installed options
Hydraulic over center cam axle to pack bales tightly
Adjustable stroke length on charge table
2 - 30" pretensioners
Cross tube unloading (to push off last bale)
Hydraulic lift ramp
Adjustable length tongue
Automatically idles down when cycle completed
Safety shut off switch on guards
Square bale riser bars
Lug tires on rear axle (when ordering hydraulic power drive)

CODE	ATTACHMENT IDENTIFIER	DESCRIPTION	SUGGESTED LIST PRICE USD ($)
		Select One Code From Each Required Category	
		BASE MACHINE	
027BXF		LW1266 Inline Bale Wrapper - Quebec Only *Includes plastic sensor shutdown and enhanced shielding, and French Operator's Manual/Decals.*	39,822.00
		HYDRAULIC POWER DRIVE	
1010		Single Wheel Hydraulic Power Drive LW1266	1,387.00
1020		Dual Wheel Hydraulic Power Drive LW1266	2,625.00
1095		No Hydraulic Power Drive	In Base Price
		ENGINE	
2000		13 HP Honda Engine	In Base Price
2010		20 HP Honda Engine *Includes High Flow Pump for faster cycle times.*	3,000.00
		REMOTE CONTROL	
3010		Remote Steering and Shutdown	1,207.00
3095		No Remote Steering and Shutdown	In Base Price
		SPECIAL EQUIPMENT - FACTORY INSTALLED	
8010		Night Working Lights *Includes three lights.*	237.00
8030		Twin Wrap Kit *For double plastic.*	583.00
8020		Guide Rollers	479.00

LW1266 Inline Bale Wrapper - Quebec Only
Continued

CODE	ATTACHMENT IDENTIFIER	DESCRIPTION	SUGGESTED LIST PRICE USD ($)
		SPECIAL EQUIPMENT - FACTORY INSTALLED ...Continued...	
		For side hill operation.	
8040		Quick Start Power Jack *Includes fuel pump.*	995.00
		ATTACHMENTS FOR FIELD CONVERSION	
		Miscellaneous:	
	5TBNWLKF	LW11/LW12 Night Working Lights	257.94
	5TBRSSKX2HDF	LW11/LW12 Remote Steering and Shutdown	1,312.78
	5TBTWKF	LW11/LW12 Twin Wrap Kit	633.32
	5TBHPDD5500F	LW12 Dual Wheel Hydraulic Power Drive	2,855.18
	5TBQSPJF	LW12 Quick Start Power Jack	1,082.10
	5TBGRF	LW12 Side Hill Guide Rollers	521.13
	5TBHPD5500F	LW12 Single Wheel Hydraulic Power Drive	1,508.85

SB3106 - 6 Ft. Sickle Bar Mower

Equipment for Base Machine

Working Width:
5 ft. 9 in. (1.75 m)
Tractor PTO Speed: 540 RPM
Tractor PTO HP (Minimum): 25 HP
Tractor PTO HP (Maximum): 50 HP
Hitch:
Category I, Category II,
and iMatch Compatible
Parking Stand Included
Height Adjustment: Skid Shoes
Drive:
Belt with Manual Adjustment
for Belt Tension
Driveline Protection: Slip Clutch
Safety Trip Linkage
Hydraulic Lifting Cylinder for Cutting Bar
Double Action Cutting Bar

CODE	ATTACHMENT IDENTIFIER	DESCRIPTION	SUGGESTED LIST PRICE USD ($)
		Select One Code From Each Required Category	
		BASE MACHINE	
0281XF		SB3106 - 6 Ft. Sickle Bar Mower *Order in multiples of two.*	4,752.00
		ATTACHMENTS - ORDER AS DESIRED	
9200		French Operators Manual and Parts Catalog (SB31 Series Sickle Bar Mower)	No Charge
		ATTACHMENTS FOR FIELD CONVERSION	
		Miscellaneous:	
	5GH89900522	French Operators Manual and Parts Catalog (SB31 Series Sickle Bar Mower)	See Parts

SB3106 - 6 Ft. Sickle Bar Mower
Continued

THIS PAGE IS INTENTIONALLY LEFT BLANK

SB3107 - 6 Ft. 9 In. Sickle Bar Mower

Equipment for Base Machine

Working Width:
6 ft. 9 in. (2.05 m)
Tractor PTO Speed: 540 RPM
Tractor PTO HP (Minimum): 25 HP
Tractor PTO HP (Maximum): 50 HP
Hitch:
Category I, Category II,
and iMatch Compatible
Parking Stand Included
Height Adjustment: Skid Shoes
Drive:
Belt with Manual Adjustment
for Belt Tension
Driveline Protection: Slip Clutch
Safety Trip Linkage
Hydraulic Lifting Cylinder for Cutting Bar
Double Action Cutting Bar

CODE	ATTACHMENT IDENTIFIER	DESCRIPTION	SUGGESTED LIST PRICE USD ($)
		Select One Code From Each Required Category	
		BASE MACHINE	
0282XF		SB3107 - 6 Ft. 9 In. Sickle Bar Mower *Order in multiples of two.*	4,962.00
		ATTACHMENTS - ORDER AS DESIRED	
9200		French Operators Manual and Parts Catalog (SB31 Series Sickle Bar Mower)	No Charge
		ATTACHMENTS FOR FIELD CONVERSION	
		Miscellaneous:	
	5GH89900522	French Operators Manual and Parts Catalog (SB31 Series Sickle Bar Mower)	See Parts

SB3107 - 6 Ft. 9 In. Sickle Bar Mower
Continued

THIS PAGE IS INTENTIONALLY LEFT BLANK

SB3108 - 7 Ft. 8 In. Sickle Bar Mower

Equipment for Base Machine

Working Width:
  7 Ft. 8 In. (2.35 m)
Tractor PTO Speed: 540 RPM
Tractor PTO HP (Minimum): 25 HP
Tractor PTO HP (Maximum): 50 HP
Hitch:
  Category I, Category II,
  and iMatch Compatible
Parking Stand Included
Height Adjustment: Skid Shoes
Drive:
  Belt with Manual Adjustment
  for Belt Tension
Driveline Protection: Slip Clutch
Safety Trip Linkage
Hydraulic Lifting Cylinder for Cutting Bar
Double Action Cutting Bar

CODE	ATTACHMENT IDENTIFIER	DESCRIPTION	SUGGESTED LIST PRICE USD ($)

Select One Code From Each Required Category

BASE MACHINE

0283XF		SB3108 - 7 Ft. 8 In. Sickle Bar Mower *Order in multiples of two.*	5,053.00

ATTACHMENTS - ORDER AS DESIRED

9200		French Operators Manual and Parts Catalog (SB31 Series Sickle Bar Mower)	No Charge

ATTACHMENTS FOR FIELD CONVERSION

		Miscellaneous:	
	5GH89900522	French Operators Manual and Parts Catalog (SB31 Series Sickle Bar Mower)	See Parts

SB3108 - 7 Ft. 8 In. Sickle Bar Mower
Continued

THIS PAGE IS INTENTIONALLY LEFT BLANK

HS2001 - 3-Point Single Tine Hay Spear

Equipment for Base Machine

Primary Spears:
One - 47 in. x 1.65 in. (119.4 cm. x 4.2 cm)
(Approximate 41 in. (104.1 cm. Usable Length)
Primary Spear Location: Top
Stabilizing Spears:
Two - 10 in. x 1.25 in. (25.4 cm. x 3.2 cm.)
Stabilizing Spear Location: Bottom
Replaceable Spears: Yes, Bolt-In Tine
Framing: Tubular
Bale Handling Capacity:
One Large Round Bale
Implement Capacity:
2200 lbs. at 24 in. (997.9 kg. at 61 cm.)
Hitch:
Category I and II
(iMatch and Quick Coupler)
Dimensions:
24.75 in. (H) x 37.5 in. (W) x 49.5 in. (L) (62.9 cm. x 95.3 cm. x 125.7 cm.)
Assembly: 15 Minutes
Operational Weight: 72 lbs. (32.7 kg.)
Warranty: 1 Year

CODE	ATTACHMENT IDENTIFIER	DESCRIPTION	SUGGESTED LIST PRICE USD ($)

Select One Code From Each Required Category

BASE MACHINE

2280XF	HS2001 - 3-Point Single Tine Hay Spear	374.00

HS2001 - 3-Point Single Tine Hay Spear
Continued

THIS PAGE IS INTENTIONALLY LEFT BLANK

HS2002 - 3-Point Dual Tine Hay Spear

Equipment for Base Machine

Primary Spears:
  Two - 47 in. x 1.65 in. (119.4 cm. x 4.2 cm)
  (Approximate 42.5 in. (108 cm. Usable Length)
Primary Spear Location: Bottom
Replaceable Spears: Yes, Bolt-In Tine
Framing: Tubular
Bale Handling Capacity:
  One Large Round Bale
Implement Capacity:
  3000 lbs. at 24 in. (1,360.8 kg. at 61 cm.)
Hitch:
  Category II and III
  (Quick Coupler - II, III, and 3N)

Dimensions:
  26.5 in. (H) x 47.5 in. (W) x 51.5 in. (L) (67.3 cm. x 120.7 cm. x 130.8 cm.)
Assembly: 15 Minutes
Operational Weight: 138 lbs. (62.6 kg.)
Warranty: 1 Year

CODE	ATTACHMENT IDENTIFIER	DESCRIPTION	SUGGESTED LIST PRICE USD ($)

Select One Code From Each Required Category

BASE MACHINE

2281XF	HS2002 - 3-Point Dual Tine Hay Spear	511.00

HS2002 - 3-Point Dual Tine Hay Spear
Continued

THIS PAGE IS INTENTIONALLY LEFT BLANK

HS2003 - 3-Point Triple Tine Hay Spear

Equipment for Base Machine

Primary Spears:
  Three - 47 in. x 1.65 in. (119.4 cm. x 4.2 cm)
  (Approximate 42.5 in. (108 cm. Usable Length)
Primary Spear Location: Bottom
Replaceable Spears: Yes, Bolt-In Tine
Framing: Tubular
Bale Handling Capacity:
  One Large Square Bale
Implement Capacity:
  3000 lbs. at 24 in. (1,360.8 kg. at 61 cm.)
Hitch:
  Category II and III
  (Quick Coupler - II, III, and 3N)

Dimensions:
  26.5 in. (H) x 60 in. (W) x 51.5 in. (L) (67.3 cm. x 152.4 cm. x 130.8 cm.)
Assembly: 30 Minutes
Operational Weight: 178 lbs. (80.7 kg.)
Warranty: 1 Year

CODE	ATTACHMENT IDENTIFIER	DESCRIPTION	SUGGESTED LIST PRICE USD ($)

Select One Code From Each Required Category

BASE MACHINE

2282XF	HS2003 - 3-Point Triple Tine Hay Spear	747.00

HS2003 - 3-Point Triple Tine Hay Spear
Continued

THIS PAGE IS INTENTIONALLY LEFT BLANK

HS2004 - 3-Point Quadruple Tine Hay Spear

Equipment for Base Machine

Primary Spears:
  Four - 47 in. x 1.65 in. (119.4 cm. x 4.2 cm)
  (Approximate 42.5 in. (108 cm. Usable Length)
Primary Spear Location: Bottom
Replaceable Spears: Yes, Bolt-In Tine
Framing: Tubular
Bale Handling Capacity:
  Two Large Round Bales (up to 5 ft. x 6 ft.(1.5 m x 1.8 m)
Implement Capacity:
  4000 lbs. at 24 in. (1,814.4 kg. at 61 cm.)
Hitch:
  Category II and III
  (Quick Coupler - II, III, and 3N)
Dimensions:
  26.5 in. (H) x 96 in. (W) x 51.5 in. (L) (67.3 cm. x 243.8 cm. x 130.8 cm.)
Assembly: 30 Minutes
Operational Weight: 255 lbs. (115.7 kg.)
Warranty: 1 Year

CODE	ATTACHMENT IDENTIFIER	DESCRIPTION	SUGGESTED LIST PRICE USD ($)

Select One Code From Each Required Category

BASE MACHINE

2283XF	HS2004 - 3-Point Quadruple Tine Hay Spear	1,016.00

HS2004 - 3-Point Quadruple Tine Hay Spear
Continued

THIS PAGE IS INTENTIONALLY LEFT BLANK

PB1001 Integral One Bottom Turning Plow

Equipment for Base Machine

Hitch:
  Lift-type, Category I,
  not iMatch Compatible
One, 14 In. (355.6 mm) Moldboard
Transport Length:
  45 In. (1,143 mm)
Transport Width:
  33 In. (838.2 mm)
Transport Height:
  40.5 In. (1,028.7 mm)
Tractor Engine HP Range:
  25 - 50 HP

Moldboard Dimensions:
  14 In. (355.6 mm) (W) x
  21 In. (533.4 mm) (L) x
  16 In. (406.4 mm) (H)
Parking Stand Included

CODE	ATTACHMENT IDENTIFIER	DESCRIPTION	SUGGESTED LIST PRICE USD ($)

Select One Code From Each Required Category

BASE MACHINE

3431XF		PB1001 Integral One Bottom Turning Plow *Order in multiples of two.*	747.00

ATTACHMENTS FOR FIELD CONVERSION

		Miscellaneous:	
	5TITE511154	French Kit - Includes Operator's Manual, Parts Catalog and Safety Decals *PB1001 and PB1002*	13.21

PB1001 Integral One Bottom Turning Plow
Continued

THIS PAGE IS INTENTIONALLY LEFT BLANK

PB1002 Integral Two Bottom Turning Plow

Equipment for Base Machine

```
Hitch:
  Lift-type, Category I,
  not iMatch Compatible
Two, 14 In. (355.6 mm) Moldboards
Transport Length:
  71 In. ( 1,803.4 mm)
Transport Width:
  40 In. (1,016 mm)
Transport Height:
  40.5 In. (1,028.7 mm)
Tractor Engine HP Range:
  25 - 50 HP
Moldboard Dimensions:
  14 In. (355.6 mm) (W) x
  21 In. (533.4 mm) (L) x
  16 In. (406.4 mm) (H)
```

CODE	ATTACHMENT IDENTIFIER	DESCRIPTION	SUGGESTED LIST PRICE USD ($)

Select One Code From Each Required Category

BASE MACHINE

3432XF		PB1002 Integral Two Bottom Turning Plow *Order in multiples of two.*	1,224.00

ATTACHMENTS FOR FIELD CONVERSION

		Miscellaneous:	
	5TITE511154	French Kit - Includes Operator's Manual, Parts Catalog and Safety Decals *PB1001 and PB1002*	13.21

PB1002 Integral Two Bottom Turning Plow
Continued

THIS PAGE IS INTENTIONALLY LEFT BLANK

BB2048 Standard Duty Box Blade

Equipment for Base Machine

3-Point Hitch:
  Category I
iMatch Compatible: Yes
Working Width: 48 In.
Tractor HP: 17 to 45 HP
Tailgate: Fixed
Shipping Weight:
  758 lbs. - (Pair)
Shanks: (4) Replaceable
Shank Type:
  3-Position with Holes and 1/2 In. Pin
Scarifier Points:
  Replaceable, Hardened Steel
End Plate Thickness: 3/8 In.
Moldboard Thickness: 3/16 In.
Moldboard Type: Formed Back
Mast: Bolt-up with 1/4 In. Plates
Duty: Standard Duty
Cutting Edges:
  (2) 1/2 In. x 6 In. Reversible
Assembly/Set up Time:
  30 Minutes (Approximate) - Per Pair
Approximate Operating Weight: 355 lbs.
Warranty: 1 Year

CODE	ATTACHMENT IDENTIFIER	DESCRIPTION	SUGGESTED LIST PRICE USD ($)

Select One Code From Each Required Category

BASE MACHINE

1041XF		BB2048 Standard Duty Box Blade *Order in multiples of two.*	974.00

ATTACHMENTS FOR FIELD CONVERSION

		Miscellaneous:	
	5WS101371	French Operator's Manual and Decal Kit (BB20, BB21 and BB20L Series)	26.45

BB2048 Standard Duty Box Blade
Continued

THIS PAGE IS INTENTIONALLY LEFT BLANK

BB2048L Limited Category I Standard Duty Box Blade

Equipment for Base Machine

Capacity:
  6.6 Cubic Foot
Tractor HP (Maximum): 25 HP
Cutting Edges:
  (2) 1/2 In. x 6 Reversible
Scarifier Shanks:
  3-Position with Holes
Scarifier Shank Points:
  3 Replaceable, Hardened Points
Beam Size: 4 In. x 4 In. x 1/4 In.
Beam Reinforcement:
  3/8 In. x 1 In. Bar Inside Tube
End Plate Thickness: 3/16 In.
Working Width: 48 In.
Height: 14 In.
Depth: 17 In.
Tailgate: Fixed

3-Point Hitch:
  Limited Category I (Aftermarket
  Category 0 Lift Pins Available)
Mast Design:
  Bolt-up with 1/4 In. Plates
Moldboard Thickness: 7 Gauge
Assembly/Set-up Time:
  30 Minutes (Approximate)
Approximate Operating Weight: 275 lbs.
Shipping Weight: 636 lbs.
Packaged 2 per Pallet

CODE	ATTACHMENT IDENTIFIER	DESCRIPTION	SUGGESTED LIST PRICE USD ($)

Select One Code From Each Required Category

BASE MACHINE

1051XF		BB2048L Limited Category I Standard Duty Box Blade *Order in multiples of two.*	797.00

ATTACHMENTS FOR FIELD CONVERSION

		Miscellaneous:	
	5WS101371	French Operator's Manual and Decal Kit (BB20, BB21 and BB20L Series)	26.45

BB2048L Limited Category I Standard Duty Box Blade
Continued

THIS PAGE IS INTENTIONALLY LEFT BLANK

BB2060 Standard Duty Box Blade

Equipment for Base Machine

3-Point Hitch:
  Category I
iMatch Compatible: Yes
Working Width: 60 In.
Tractor HP: 19 to 55 HP
Tailgate: Fixed
Shipping Weight:
  918 lbs. - (Pair)
Shanks: (4) Replaceable
Shank Type:
  3-Position with Holes and 1/2 In. Pin
Scarifier Points:
  Replaceable, Hardened Steel
End Plate Thickness: 3/8 In.
Moldboard Thickness: 3/16 In.
Moldboard Type: Formed Back
Mast: Bolt-up with 1/4 In. Plates
Duty: Standard Duty
Cutting Edges:
  (2) 1/2 In. x 6 In. Reversible
Assembly/Set-Up Time:
  30 Minutes (Approximate) - Per Pair
Approximate Operating Weight: 425 lbs.
Warranty: 1 Year

CODE	ATTACHMENT IDENTIFIER	DESCRIPTION	SUGGESTED LIST PRICE USD ($)

Select One Code From Each Required Category

BASE MACHINE

1042XF		BB2060 Standard Duty Box Blade *Order in multiples of two.*	1,042.00

ATTACHMENTS FOR FIELD CONVERSION

		Miscellaneous:	
	5WS101371	French Operator's Manual and Decal Kit (BB20, BB21 and BB20L Series)	26.45

BB2060 Standard Duty Box Blade
Continued

THIS PAGE IS INTENTIONALLY LEFT BLANK

BB2065 Standard Duty Box Blade

Equipment for Base Machine

3-Point Hitch:
  Category I
IMatch Compatible: Yes
Working Width: 66 In.
Tractor HP: 23 to 55 HP
Tailgate: Fixed
Shipping Weight:
  988 lbs. - (Pair)
Shanks: (4) Replaceable
Shank Type:
  3-Position with Holes and 1/2 In. Pin
Scarifier Points:
  Replaceable, Hardened Steel
End Plate Thickness: 3/8 In.
Moldboard Thickness: 3/16 In.
Moldboard Type: Formed Back
Mast: Bolt-up with 1/4 In. Plates
Duty: Standard Duty
Cutting Edges:
  (2) 1/2 In. x 6 In. Reversible
Assembly/Set up Time:
  30 Minutes (Approximate) - Per Pair
Approximate Operating Weight: 460 lbs.
Warranty: 1 Year

CODE	ATTACHMENT IDENTIFIER	DESCRIPTION	SUGGESTED LIST PRICE USD ($)

Select One Code From Each Required Category

BASE MACHINE

1043XF		BB2065 Standard Duty Box Blade *Order in multiples of two.*	1,148.00

ATTACHMENTS FOR FIELD CONVERSION

		Miscellaneous:	
	5WS101371	French Operator's Manual and Decal Kit (BB20, BB21 and BB20L Series)	26.45

BB2065 Standard Duty Box Blade
Continued

THIS PAGE IS INTENTIONALLY LEFT BLANK

BB2072 Standard Duty Box Blade

Equipment for Base Machine

3-Point Hitch:
  Category I
iMatch Compatible: Yes
Working Width: 72 In.
Tractor HP: 27 to 55 HP
Tailgate: Fixed
Shipping Weight:
  1056 lbs. - (Pair)
Shanks: (5) Replaceable
Shank Type:
  3-Position with Holes and 1/2 In. Pin
Scarifier Points:
  Replaceable, Hardened Steel
End Plate Thickness: 3/8 In.
Moldboard Thickness: 3/16 In.
Moldboard Type: Formed Back
Mast: Bolt-up with 1/4 In. Plates
Duty: Standard Duty
Cutting Edges:
  (2) 1/2 In. x 6 In. Reversible
Assembly/Set up Time:
  30 Minutes (Approximate) - Per Pair
Approximate Operating Weight: 494 lbs.
Warranty: 1 Year

CODE	ATTACHMENT IDENTIFIER	DESCRIPTION	SUGGESTED LIST PRICE USD ($)

Select One Code From Each Required Category

BASE MACHINE

1044XF		BB2072 Standard Duty Box Blade *Order in multiples of two.*	1,194.00

ATTACHMENTS FOR FIELD CONVERSION

		Miscellaneous:	
	5WS101371	French Operator's Manual and Decal Kit (BB20, BB21 and BB20L Series)	26.45

BB2072 Standard Duty Box Blade
Continued

THIS PAGE IS INTENTIONALLY LEFT BLANK

BB2172 Medium Duty Box Blade

Equipment for Base Machine

3-Point Hitch:
  Category I
Working Width: 72 In.
Height: 33-1/2 In.
Depth: 31 In.
Capacity:
  19 Cubic Foot
Tractor HP: 70 HP Maximum
Tailgate:
  Floating/Removable
Shanks:
  (6) Replaceable
Beam Size:
  4 In. x 4 In. x 1/4 In.
Beam Reinforcement:
  1 In. x 3/8 In. Backing Strip
End Plate Thickness:
  3/8 In. with a 3/8 In. x 3 In.
  Reinforced Bottom Edge

Moldboard Thickness: 3/16 In.
Duty: Medium
Cutting Edges:
  (2) 1/2 In. x 6 In. Reversible
Assembly/Set-Up Time:
  15 Minutes (Approximate)
Operating Weight:
  585 lbs. (Approximate)
Shipping Weight:
  675 lbs. (Approximate)
Packaged 1 Per Pallet
Mast: Bolt-up with 3/8 In. Plates
Warranty: 1 Year

CODE	ATTACHMENT IDENTIFIER	DESCRIPTION	SUGGESTED LIST PRICE USD ($)

Select One Code From Each Required Category

BASE MACHINE

1061XF		BB2172 Medium Duty Box Blade	1,596.00

ATTACHMENTS FOR FIELD CONVERSION

		Miscellaneous:	
	5WS101371	French Operator's Manual and Decal Kit (BB20, BB21 and BB20L Series)	26.45

BB2172 Medium Duty Box Blade
Continued

THIS PAGE IS INTENTIONALLY LEFT BLANK

BB2184 Medium Duty Box Blade

Equipment for Base Machine

3-Point Hitch:
  Category I, iMatch Compatible
  (Quick-Attach System)
Working Width: 84 In.
Height: 33-1/2 In.
Depth: 31 In.
Capacity: 22.3 Cubic Foot
Tractor HP (Maximum): 70 HP
Tailgate:
  Floating/Removable
Shanks: (7) Replaceable
Beam Size: 4 In. x 4 In. x 1/4 In.
Beam Reinforcement:
  1 In. x 3/8 In. Backing Strip
End Plate Thickness:
  3/8 In. with a 3/8 In. x 3 In.
  Reinforced Bottom Edge
Duty: Medium

Moldboard Thickness: 3/16 In.
Cutting Edges:
  (2) 1/2 In. x 6 In. Reversible
Assembly/Set-Up Time:
  15 Minutes (Approximate)
Operating Weight:
  667 lbs. (Approximate)
Shipping Weight:
  757 lbs. (Approximate)
Packaged 1 Per Pallet
Mast: Bolt-up with 3/8 In. Plates
Warranty: 1 Year

CODE	ATTACHMENT IDENTIFIER	DESCRIPTION	SUGGESTED LIST PRICE USD ($)

Select One Code From Each Required Category

BASE MACHINE

1062XF		BB2184 Medium Duty Box Blade	1,749.00

ATTACHMENTS FOR FIELD CONVERSION

		Miscellaneous:	
	5WS101371	French Operator's Manual and Decal Kit (BB20, BB21 and BB20L Series)	26.45

BB2184 Medium Duty Box Blade
Continued

THIS PAGE IS INTENTIONALLY LEFT BLANK

BB3272 - 6 Ft. Construction Grade Box Blade with Scarifiers

Equipment for Base Machine

Tailgate:
  Hinged Tailgate
Grading and Leveling:
  Fine, Precision Grading and Leveling
Tractor Compatibility:
  Balanced Design
Beam Type:
  Tubular Scarifier Beam
Scarifier Shanks:
  Notched 3 Position
Points:
  Heat Treated Points
Box Design:
  High Capacity Box, No Gussets
  or Obstructions
Hydraulic Opening: NA
Hydraulic Kit: NA
Capacity (Cubic Foot):
  21 Cubic Foot
Tractor HP: 80 HP Maximum
Cutting Edges:
  (2) 1/2 In. x 6 In. Reversible
Scarifier Shanks:
  (7) Replaceable
Beam Size:
  4 In. x 4 In. x 3/8 In.
Beam Reinforcement: Yes
End Plate Thickness: 1/2 In.
Working Width: 72 In.
Height: 20 In.
Depth: 26-1/2 In.
Duty: Construction Grade
Hitch Type:
  Category I and Category II
  Quick Hitch Compatible
Mast Design: Welded
Assembly/Set-Up Time: 15 Minutes
Operating Weight: 790 lbs.
Shipping Weight: 830 lbs.
Shipping per Crate:
  Packaged 1 Per Pallet
Warranty: 1 Year Warranty
Moldboard Thickness: 1/4 In.
Manufacturer Model: New
Paint Color: Construction Yellow

CODE	ATTACHMENT IDENTIFIER	DESCRIPTION	SUGGESTED LIST PRICE USD ($)
		Select One Code From Each Required Category	
		BASE MACHINE	
1081XF		BB3272 - 6 Ft. Construction Grade Box Blade with Scarifiers *Construction yellow.*	2,179.00

BB3272 - 6 Ft. Construction Grade Box Blade with Scarifiers
Continued

THIS PAGE IS INTENTIONALLY LEFT BLANK

BB3284 - 7 Ft. Construction Grade Box Blade with Scarifiers

Equipment for Base Machine

Tailgate:
  Hinged Tailgate
Grading and Leveling:
  Fine, Precision Grading and Leveling
Tractor Compatibility:
  Balanced Design
Beam Type:
  Tubular Scarifier Beam
Scarifier Shanks:
  Notched 3 Position
Points:
  Heat Treated Points
Box Design:
  High Capacity Box, No Gussets
  or Obstructions
Hydraulic Opening: NA
Hydraulic Kit: NA
Capacity (Cubic Foot):
  24.50 Cubic Foot
Tractor HP: 80 HP Maximum
Cutting Edges:
  (2) 1/2 In. x 6 In. Reversible
Scarifier Shanks:
  (8) Replaceable
Beam Size:
  4 In. x 4 In. x 3/8 In.
Beam Reinforcement: Yes
End Plate Thickness: 1/2 In.
Working Width: 84 In.
Height: 20 In.
Depth: 26-1/2 In.
Duty: Construction Grade
Hitch Type:
  Category I and Category II
  Quick Hitch Compatible
Mast Design: Welded
Assembly/Set-Up Time: 15 Minutes
Operating Weight: 885 lbs.
Shipping Weight: 925 lbs.
Shipping per Crate:
  Packaged 1 Per Pallet
Warranty: 1 Year Warranty
Moldboard Thickness: 1/4 In.
Manufacturer Model: New
Paint Color: Construction Yellow

CODE	ATTACHMENT IDENTIFIER	DESCRIPTION	SUGGESTED LIST PRICE USD ($)
		Select One Code From Each Required Category	
		BASE MACHINE	
1082XF		BB3284 - 7 Ft. Construction Grade Box Blade with Scarifiers *Construction yellow.*	2,387.00

BB3284 - 7 Ft. Construction Grade Box Blade with Scarifiers
Continued

THIS PAGE IS INTENTIONALLY LEFT BLANK

BB3296 - 8 Ft. Construction Grade Box Blade with Scarifiers

Equipment for Base Machine

Tailgate:
  Hinged Tailgate
Grading and Leveling:
  Fine, Precision Grading and Leveling
Tractor Compatibility:
  Balanced Design
Beam Type:
  Tubular Scarifier Beam
Scarifier Shanks:
  Notched 3 Position
Points:
  Heat Treated Points
Box Design:
  High Capacity Box, No Gussets
  or Obstructions
Hydraulic Opening: NA
Hydraulic Kit: NA
Capacity (Cubic Foot):
  28 Cubic Foot
Tractor HP: 80 HP Maximum
Cutting Edges:
  (2) 1/2 In. x 6 In. Reversible
Scarifier Shanks:
  (9) Replaceable
Beam Size:
  4 In. x 4 In. x 3/8 In.
Beam Reinforcement: Yes
End Plate Thickness: 1/2 In.
Working Width: 96 In.
Height: 20 In.
Depth: 26-1/2 In.
Duty: Construction Grade
Hitch Type:
  Category I and Category II
  Quick Hitch Compatible
Mast Design: Welded
Assembly/Set-Up Time: 15 Minutes
Operating Weight: 1010 lbs.
Shipping Weight: 1050 lbs.
Shipping per Crate:
  Packaged 1 Per Pallet
Warranty: 1 Year Warranty
Moldboard Thickness: 1/4 In.
Manufacturer Model: New
Paint Color: Construction Yellow

CODE	ATTACHMENT IDENTIFIER	DESCRIPTION	SUGGESTED LIST PRICE USD ($)
		Select One Code From Each Required Category	
		BASE MACHINE	
1083XF		BB3296 - 8 Ft. Construction Grade Box Blade with Scarifiers *Construction yellow.*	2,726.00

BB3296 - 8 Ft. Construction Grade Box Blade with Scarifiers
Continued

THIS PAGE IS INTENTIONALLY LEFT BLANK

BB4160 - 5 Ft. Hydraulic Scarifier Box Blade - Low Back

Equipment for Base Machine

Tailgate:
  Hinged, Floating
Grading and Leveling:
  Fine, Precision Grading and Leveling
Tractor Compatibility:
  Category I iMatch Compatible
Beam Type:
  Tubular Scarifier Beam
Scarifier Shanks:
  Notched 3 Position
Points:
  Heat Treated Points
Box Design: Low Back
Hydraulic Opening:
  Hydraulically Operated Scarifier Bar
Hydraulic Kit:
  Pin Kit And Hydraulic Hose Kit Included
Capacity (Cubic Foot):
  21.8 Cubic Foot
Tractor HP: Up to 50 HP
Cutting Edges:
  (2) 1/2 In. x 6 In. Reversible
Scarifier Shanks:
  (6) Replaceable
Beam Size:
  Main Beam - 4 In. x 4 In. x 1/4 In.
  Shank Beam - 4 In. x 4 In. x 1/4 In.
Beam Reinforcement:
  1/2 In. x 3/4 In. Bar
End Plate Thickness: 3/8 In.
Working Width: 60 In.
Height: 20 In.
Depth: 33 In.
Duty: Medium
Hitch Type:
  Category I iMatch Compatible
Mast Design:
  Welded 3/8 In. Plate
Assembly/Set-Up Time: 30 Minutes
Operating Weight: 725 lbs.
Shipping Weight: 765 lbs.
Shipping per Crate:
  Packaged 1 Per Pallet
Warranty: 1 Year Warranty
Moldboard Thickness: 3/16 In.
Manufacturer Model: TB30-60H
Paint Color: Green

CODE	ATTACHMENT IDENTIFIER	DESCRIPTION	SUGGESTED LIST PRICE USD ($)
		Select One Code From Each Required Category	
		BASE MACHINE	
1101XF		BB4160 - 5 Ft. Hydraulic Scarifier Box Blade - Low Back *Green only.*	2,838.00

BB4160 - 5 Ft. Hydraulic Scarifier Box Blade - Low Back
Continued

THIS PAGE IS INTENTIONALLY LEFT BLANK

BB4166 - 5 Ft. 6 In. Hydraulic Scarifier Box Blade - Low Back

Equipment for Base Machine

Tailgate:
  Hinged, Floating
Grading and Leveling:
  Fine, Precision Grading and Leveling
Tractor Compatibility:
  Category I iMatch Compatible
Beam Type:
  Tubular Scarifier Beam
Scarifier Shanks:
  Notched 3 Position
Points:
  Heat Treated Points
Box Design: Low Back
Hydraulic Opening:
  Hydraulically Operated Scarifier Bar
Hydraulic Kit:
  Pin Kit and Hydraulic Hose Kit Included
Capacity (Cubic Foot):
  24 Cubic Foot
Tractor HP: Up to 50 HP
Cutting Edges:
  (2) 1/2 In. x 6 In. Reversible
Scarifier Shanks:
  (6) Replaceable
Beam Size:
  Main Beam - 4 In. x 4 In. x 1/4 In.
  Shank Beam - 4 In. x 4 In. x 1/4 In.
Beam Reinforcement:
  1/2 In. x 3/4 In. Bar
End Plate Thickness: 3/8 In.
Working Width: 66 In.
Height: 20 In.
Depth: 33 In.
Duty: Medium
Hitch Type:
  Category I iMatch Compatible
Mast Design:
  Welded 3/8 In. Plate
Assembly/Set-Up Time: 30 Minutes
Operating Weight: 772 lbs.
Shipping Weight: 812 lbs.
Shipping per Crate:
  Packaged 1 Per Pallet
Warranty: 1 Year Warranty
Moldboard Thickness: 3/16 In.
Manufacturer Model: TB30-66H
Paint Color: Green

CODE	ATTACHMENT IDENTIFIER	DESCRIPTION	SUGGESTED LIST PRICE USD ($)

Select One Code From Each Required Category

BASE MACHINE

1102XF	BB4166 - 5 Ft. 6 In. Hydraulic Scarifier Box Blade - Low Back *Green only.*	3,039.00

BB4166 - 5 Ft. 6 In. Hydraulic Scarifier Box Blade - Low Back
Continued

THIS PAGE IS INTENTIONALLY LEFT BLANK

BB4172 - 6 Ft. Hydraulic Scarifier Box Blade - Low Back

Equipment for Base Machine

Tailgate:
  Hinged, Floating
Grading and Leveling:
  Fine, Precision Grading and Leveling
Tractor Compatibility:
  Category I iMatch Compatible
Beam Type:
  Tubular Scarifier Beam
Scarifier Shanks:
  Notched 3 Position
Points:
  Heat Treated Points
Box Design: Low Back
Hydraulic Opening:
  Hydraulically Operated Scarifier Bar
Hydraulic Kit:
  Pin Kit and Hydraulic Hose Kit Included
Capacity (Cubic Foot):
  26.2 Cubic Foot
Tractor HP: Up to 50 HP
Cutting Edges:
  (2) 1/2 In. x 6 In. Reversible
Scarifier Shanks:
  (6) Replaceable
Beam Size:
  Main Beam - 4 In. x 4 In. x 1/4 In.
  Shank Beam - 4 In. x 4 In. x 1/4 In.
Beam Reinforcement:
  1/2 In. x 3/4 In. Bar
End Plate Thickness: 3/8 In.
Working Width: 72 In.
Height: 20 In.
Depth: 33 In.
Duty: Medium
Hitch Type:
  Category I iMatch Compatible
Mast Design:
  Welded 3/8 In. Plate
Assembly/Set-Up Time: 30 Minutes
Operating Weight: 815 lbs.
Shipping Weight: 855 lbs.
Shipping per Crate:
  Packaged 1 Per Pallet
Warranty: 1 Year Warranty
Moldboard Thickness: 3/16 In.
Manufacturer Model: TB30-72H
Paint Color: Green

CODE	ATTACHMENT IDENTIFIER	DESCRIPTION	SUGGESTED LIST PRICE USD ($)
		Select One Code From Each Required Category	
		BASE MACHINE	
1103XF		BB4172 - 6 Ft. Hydraulic Scarifier Box Blade - Low Back *Green only.*	3,105.00

BB4172 - 6 Ft. Hydraulic Scarifier Box Blade - Low Back
Continued

THIS PAGE IS INTENTIONALLY LEFT BLANK

BB4178 - 6 Ft. 6 In. Hydraulic Scarifier Box Blade - Low Back

Equipment for Base Machine

Tailgate:
  Hinged, Floating
Grading and Leveling:
  Fine, Precision Grading and Leveling
Tractor Compatibility:
  Category I and II, iMatch and
  Quick Coupler Compatible
Beam Type:
  Tubular Scarifier Beam
Scarifier Shanks:
  Notched 3 Position
Points:
  Heat Treated Points
Box Design: Low Back
Hydraulic Opening:
  Hydraulically Operated Scarifier Bar
Hydraulic Kit:
  Pin Kit and Hydraulic Hose Kit Included
Capacity (Cubic Foot):
  28.3 Cubic Foot
Tractor HP: Up to 90 HP
Cutting Edges:
  (2) 1/2 In. x 6 In. Reversible
Scarifier Shanks:
  (8) Replaceable
Beam Size:
  Main Beam - 4 In. x 4 In. x 1/4 In.
  Shank Beam - 4 In. x 4 In. x 1/4 In.
Beam Reinforcement:
  1/2 In. x 3/4 In. Bar
End Plate Thickness: 1/2 In.
Working Width: 78 In.
Height: 20 In.
Depth: 33 In.
Duty: Heavy
Hitch Type:
  Category I and II, iMatch and
  Quick Coupler Compatible
Mast Design:
  Welded 1/2 In. Plate
Assembly/Set-Up Time: 30 Minutes
Operating Weight: 1016 lbs.
Shipping Weight: 1056 lbs.
Shipping per Crate:
  Packaged 1 Per Pallet
Warranty: 1 Year Warranty
Moldboard Thickness: 1/4 In.
Manufacturer Model: TB30-78H
Paint Color:
  Construction Yellow (Optional Green)

CODE	ATTACHMENT IDENTIFIER	DESCRIPTION	SUGGESTED LIST PRICE USD ($)

Select One Code From Each Required Category

BASE MACHINE

1104XF	BB4178 - 6 Ft. 6 In. Hydraulic Scarifier Box Blade - Low Back	3,607.00

MACHINE COLOR

1000	Green	In Base Price
1010	Construction Yellow	Same Price

BB4178 - 6 Ft. 6 In. Hydraulic Scarifier Box Blade - Low Back
Continued

THIS PAGE IS INTENTIONALLY LEFT BLANK

BB4184 - 7 Ft. Hydraulic Scarifier Box Blade - Low Back

Equipment for Base Machine

Tailgate:
  Hinged, Floating
Grading and Leveling:
  Fine, Precision Grading And Leveling
Tractor Compatibility:
  Category I and II, iMatch and
  Quick Coupler Compatible
Beam Type:
  Tubular Scarifier Beam
Scarifier Shanks:
  Notched 3 Position
Points:
  Heat Treated Points
Box Design: Low Back
Hydraulic Opening:
  Hydraulically Operated Scarifier Bar
Hydraulic Kit:
  Pin Kit and Hydraulic Hose Kit Included
Capacity (Cubic Foot):
  30.5 Cubic Foot
Tractor HP: Up to 90 HP
Cutting Edges:
  (2) 1/2 In. x 6 In. Reversible
Scarifier Shanks:
  (8) Replaceable
Beam Size:
  Main Beam - 4 In. x 4 In. x 1/4 In.
  Shank Beam - 4 In. x 4 In. x 1/4 In.
Beam Reinforcement:
  1/2 In. x 3/4 In. Bar
End Plate Thickness: 1/2 In.
Working Width: 84 In.
Height: 20 In.
Depth: 33 In.
Duty: Heavy
Hitch Type:
  Category I and II, iMatch and
  Quick Coupler Compatible
Mast Design:
  Welded 1/2 In. Plate
Assembly/Set-Up Time: 30 Minutes
Operating Weight: 1052 lbs.
Shipping Weight: 1092 lbs.
Shipping per Crate:
  Packaged 1 Per Pallet
Warranty: 1 Year Warranty
Moldboard Thickness: 1/4 In.
Manufacturer Model: TB30-84H
Paint Color:
  Construction Yellow (Optional Green)

CODE	ATTACHMENT IDENTIFIER	DESCRIPTION	SUGGESTED LIST PRICE USD ($)

Select One Code From Each Required Category

BASE MACHINE

1105XF	BB4184 - 7 Ft. Hydraulic Scarifier Box Blade - Low Back	3,657.00

MACHINE COLOR

1000	Green	In Base Price
1010	Construction Yellow	Same Price

BB4184 - 7 Ft. Hydraulic Scarifier Box Blade - Low Back
Continued

THIS PAGE IS INTENTIONALLY LEFT BLANK

BB4196 - 8 Ft. Hydraulic Scarifier Box Blade - Low Back

Equipment for Base Machine

Tailgate:
  Hinged, Floating
Grading and Leveling:
  Fine, Precision Grading and Leveling
Tractor Compatibility:
  Category I and II, iMatch and
  Quick Coupler Compatible
Beam Type:
  Tubular Scarifier Beam
Scarifier Shanks:
  Notched 3 Position
Points:
  Heat Treated Points
Box Design: Low Back
Hydraulic Opening:
  Hydraulically Operated Scarifier Bar
Hydraulic Kit:
  Pin Kit and Hydraulic Hose Kit Included
Capacity (Cubic Foot):
  34.9 Cubic Foot
Tractor HP: Up to 90 HP
Cutting Edges:
  (2) 1/2 In. x 6 In. Reversible
Scarifier Shanks:
  (8) Replaceable
Beam Size:
  Main Beam - 4 In. x 4 In. x 1/4 In.
  Shank Beam - 4 In. x 4 In. x 1/4 In.
Beam Reinforcement:
  1/2 In. x 3/4 In. Bar
End Plate Thickness: 1/2 In.
Working Width: 96 In.
Height: 20 In.
Depth: 33 In.
Duty: Heavy
Hitch Type:
  Category I and II, iMatch and
  Quick Coupler Compatible
Mast Design:
  Welded 1/2 In. Plate
Assembly/Set-Up Time: 30 Minutes
Operating Weight: 1146 lbs.
Shipping Weight: 1186 lbs.
Shipping per Crate:
  Packaged 1 Per Pallet
Warranty: 1 Year Warranty
Moldboard Thickness: 1/4 In.
Manufacturer Model: TB30-96H
Paint Color:
  Construction Yellow (Optional Green)

CODE	ATTACHMENT IDENTIFIER	DESCRIPTION	SUGGESTED LIST PRICE USD ($)

Select One Code From Each Required Category

BASE MACHINE

1106XF	BB4196 - 8 Ft. Hydraulic Scarifier Box Blade - Low Back	3,817.00

MACHINE COLOR

1000	Green	In Base Price
1010	Construction Yellow	Same Price

BB4196 - 8 Ft. Hydraulic Scarifier Box Blade - Low Back
Continued

THIS PAGE IS INTENTIONALLY LEFT BLANK

BB4278H - 6 Ft. 6 In. Hydraulic Scarifier Box Blade - High Back

Equipment for Base Machine

Tailgate:
  Hinged, Floating
Grading and Leveling:
  Fine, Precision Grading and Leveling
Tractor Compatibility:
  Category I and II, iMatch and
  Quick Coupler Compatible
Beam Type:
  Tubular Scarifier Beam
Scarifier Shanks:
  Notched 3 Position
Points:
  Heat Treated Points
Box Design: High Back
Hydraulic Opening:
  Hydraulically Operated Scarifier Bar
Hydraulic Kit:
  Pin Kit and Hydraulic Hose Kit Included
Capacity (Cubic Foot):
  32 Cubic Foot
Tractor HP: Up to 90 HP
Cutting Edges:
  (2) 1/2 In. x 6 In. Reversible
Scarifier Shanks:
  (8) Replaceable
Beam Size:
  Main Beam - 5 In. x 5 In. x 1/4 In.
  Shank Beam - 5 In. x 5 In. x 1/4 In.
Beam Reinforcement:
  1/2 In. x 1 In. Bar
End Plate Thickness: 1/2 In.
Working Width: 78 In.
Height:
  20 In. Front, 26 In. Rear
Depth: 33 In.
Duty: Heavy
Hitch Type:
  Category I and II, iMatch and
  Quick Coupler Compatible
Mast Design:
  Welded 1/2 In. Plate
Assembly/Set-Up Time: 30 Minutes
Operating Weight: 1160 lbs.
Shipping Weight: 1200 lbs.
Shipping per Crate:
  Packaged 1 Per Pallet
Warranty: 1 Year Warranty
Moldboard Thickness: 1/4 In.
Manufacturer Model: TB40-78H
Paint Color:
  Construction Yellow (Optional Green)

CODE	ATTACHMENT IDENTIFIER	DESCRIPTION	SUGGESTED LIST PRICE USD ($)

Select One Code From Each Required Category

BASE MACHINE

1111XF	BB4278H - 6 Ft. 6 In. Hydraulic Scarifier Box Blade - High Back	3,699.00

MACHINE COLOR

1000	Green	In Base Price
1010	Construction Yellow	Same Price

BB4278H - 6 Ft. 6 In. Hydraulic Scarifier Box Blade - High Back
Continued

THIS PAGE IS INTENTIONALLY LEFT BLANK

BB4284H - 7 Ft. Hydraulic Scarifier Box Blade - High Back

Equipment for Base Machine

Tailgate:
  Hinged, Floating
Grading and Leveling:
  Fine, Precision Grading and Leveling
Tractor Compatibility:
  Category I and II, iMatch and
  Quick Coupler Compatible
Beam Type:
  Tubular Scarifier Beam
Scarifier Shanks:
  Notched 3 Position
Points:
  Heat Treated Points
Box Design: High Back
Hydraulic Opening:
  Hydraulically Operated Scarifier Bar
Hydraulic Kit:
  Pin Kit and Hydraulic Hose Kit Included
Capacity (Cubic Foot):
  34.5 Cubic Foot
Tractor HP: Up to 90 HP
Cutting Edges:
  (2) 1/2 In. x 6 In. Reversible
Scarifier Shanks:
  (8) Replaceable
Beam Size:
  Main Beam - 5 In. x 5 In. x 1/4 In.
  Shank Beam - 5 In. x 5 In. x 1/4 In.
Beam Reinforcement:
  1/2 In. x 1 In. Bar
End Plate Thickness: 1/2 In.
Working Width: 84 In.
Height:
  20 In. Front, 26 In. Rear
Depth: 33 In.
Duty: Heavy
Hitch Type:
  Category I and II, iMatch and
  Quick Coupler Compatible
Mast Design:
  Welded 1/2 In. Plate
Assembly/Set-Up Time: 30 Minutes
Operating Weight: 1200 lbs.
Shipping Weight: 1240 lbs.
Shipping per Crate:
  Packaged 1 Per Pallet
Warranty: 1 Year Warranty
Moldboard Thickness: 1/4 In.
Manufacturer Model: TB40-84H
Paint Color:
  Construction Yellow (Optional Green)

CODE	ATTACHMENT IDENTIFIER	DESCRIPTION	SUGGESTED LIST PRICE USD ($)

Select One Code From Each Required Category

BASE MACHINE

1112XF	BB4284H - 7 Ft. Hydraulic Scarifier Box Blade - High Back	3,799.00

MACHINE COLOR

1000	Green	In Base Price
1010	Construction Yellow	Same Price

BB4284H - 7 Ft. Hydraulic Scarifier Box Blade - High Back
Continued

THIS PAGE IS INTENTIONALLY LEFT BLANK

BB4296H - 8 Ft. Hydraulic Scarifier Box Blade - High Back

Equipment for Base Machine

Tailgate:
  Hinged, Floating
Grading and Leveling:
  Fine, Precision Grading and Leveling
Tractor Compatibility:
  Category I and II, iMatch and
  Quick Coupler Compatible
Beam Type:
  Tubular Scarifier Beam
Scarifier Shanks:
  Notched 3 Position
Points:
  Heat Treated Points
Box Design: High Back
Hydraulic Opening:
  Hydraulically Operated Scarifier Bar
Hydraulic Kit:
  Pin Kit and Hydraulic Hose Kit Included
Capacity (Cubic Foot):
  39.4 Cubic Foot
Tractor HP: Up to 90 HP
Cutting Edges:
  (2) 1/2 In. x 6 In. Reversible
Scarifier Shanks:
  (8) Replaceable
Beam Size:
  Main Beam - 5 In. x 5 In. x 1/4 In.
  Shank Beam - 5 In. x 5 In. x 1/4 In.
Beam Reinforcement:
  1/2 In. x 1 In. Bar
End Plate Thickness: 1/2 In.
Working Width: 96 In.
Height:
  20 In. Front, 26 In. Rear
Depth: 33 In.
Duty: Heavy
Hitch Type:
  Category I and II, iMatch and
  Quick Coupler Compatible
Mast Design:
  Welded 1/2 In. Plate
Assembly/Set-Up Time: 30 Minutes
Operating Weight: 1310 lbs.
Shipping Weight: 1350 lbs.
Shipping per Crate:
  Packaged 1 Per Pallet
Warranty: 1 Year Warranty
Moldboard Thickness: 1/4 In.
Manufacturer Model: TB4096H
Paint Color:
  Construction Yellow (Optional Green)

CODE	ATTACHMENT IDENTIFIER	DESCRIPTION	SUGGESTED LIST PRICE USD ($)

Select One Code From Each Required Category

BASE MACHINE

1113XF	BB4296H - 8 Ft. Hydraulic Scarifier Box Blade - High Back	3,973.00

MACHINE COLOR

1000	Green	In Base Price
1010	Construction Yellow	Same Price

BB4296H - 8 Ft. Hydraulic Scarifier Box Blade - High Back
Continued

THIS PAGE IS INTENTIONALLY LEFT BLANK

BB5060 Standard Duty Box Blade

Equipment for Base Machine

3-Point Hitch:
  Category I
iMatch Compatible: Yes
Working Width: 61.5 In.
Tractor HP: 56 PTO HP max;
  see compatibility charts for
  specific model of tractors
Tailgate: Fixed
Shipping Weight:
  894 lbs. - (Pair)
Shanks: (5) Replaceable
Shank Type:
  3-Position with Holes and 1/2 In. Pin
Scarifier Points:
  Hardened Steel
End Plate Thickness: 3/8 In.
Moldboard Thickness: 3/16 In.
Moldboard Type: Formed Back
Mast: Welded
Duty: Standard Duty
Cutting Edges:
  (2) 3/8 In. x 6 In. Reversible
Assembly/Set-Up Time:
  15 Minutes (Approximate) - Per Pair
Approximate Operating Weight: 418 lbs.
Warranty: 1 Year

CODE	ATTACHMENT IDENTIFIER	DESCRIPTION	SUGGESTED LIST PRICE USD ($)

Select One Code From Each Required Category

BASE MACHINE

1641XF	BB5060 Standard Duty Box Blade *Order in multiples of two.*	911.00

BB5060 Standard Duty Box Blade
Continued

THIS PAGE IS INTENTIONALLY LEFT BLANK

BB5072 Standard Duty Box Blade

Equipment for Base Machine

3-Point Hitch:
  Category I
iMatch Compatible: Yes
Working Width: 73.5 In.
Tractor HP: 56 PTO HP max;
  see compatibility charts for
  specific model of tractors
Tailgate: Fixed
Shipping Weight:
  1,006 lbs. - (Pair)
Shanks: (6) Replaceable
Shank Type:
  3-Position with Holes and 1/2 In. Pin
Scarifier Points:
  Hardened Steel
End Plate Thickness: 3/8 In.
Moldboard Thickness: 3/16 In.
Moldboard Type: Formed Back
Mast: Welded
Duty: Standard Duty
Cutting Edges:
  (2) 3/8 In. x 6 In. Reversible
Assembly/Set-Up Time:
  15 Minutes (Approximate) - Per Pair
Approximate Operating Weight: 474 lbs.
Warranty: 1 Year

CODE	ATTACHMENT IDENTIFIER	DESCRIPTION	SUGGESTED LIST PRICE USD ($)

Select One Code From Each Required Category

BASE MACHINE

1642XF	BB5072 Standard Duty Box Blade *Order in multiples of two.*	1,054.00

BB5072 Standard Duty Box Blade
Continued

THIS PAGE IS INTENTIONALLY LEFT BLANK

BB5084 Standard Duty Box Blade

Equipment for Base Machine

3-Point Hitch:
  Category I
iMatch Compatible: Yes
Working Width: 88.5 In.
Tractor HP: 56 PTO HP max;
  see compatibility charts for
  specific model of tractors
Tailgate: Fixed
Shipping Weight:
  1,078 lbs. - (Pair)
Shanks: (6) Replaceable
Shank Type:
  3-Position with Holes and 1/2 In. Pin
Scarifier Points:
  Hardened Steel
End Plate Thickness: 3/8 In.
Moldboard Thickness: 3/16 In.
Moldboard Type: Formed Back
Mast: Welded
Duty: Standard Duty
Cutting Edges:
  (2) 3/8 In. x 6 In. Reversible
Assembly/Set-Up Time:
  15 Minutes (Approximate) - Per Pair
Approximate Operating Weight: 510 lbs.
Warranty: 1 Year

CODE	ATTACHMENT IDENTIFIER	DESCRIPTION	SUGGESTED LIST PRICE USD ($)

Select One Code From Each Required Category

BASE MACHINE

1643XF	BB5084 Standard Duty Box Blade *Order in multiples of two.*	1,205.00

BB5084 Standard Duty Box Blade
Continued

THIS PAGE IS INTENTIONALLY LEFT BLANK

BB5096 Standard Duty Box Blade

Equipment for Base Machine

3-Point Hitch:
  Category I
iMatch Compatible: Yes
Working Width: 97.5 In.
Tractor HP: 56 PTO HP max;
  see compatibility charts for
  specific model of tractors
Tailgate: Fixed
Shipping Weight:
  1,262 lbs. - (Pair)
Shanks: (7) Replaceable
Shank Type:
  3-Position with Holes and 1/2 In. Pin
Scarifier Points:
  Hardened Steel
End Plate Thickness: 3/8 In.
Moldboard Thickness: 3/16 In.
Moldboard Type: Formed Back
Mast: Welded
Duty: Standard Duty
Cutting Edges:
  (2) 3/8 In. x 6 In. Reversible
Assembly/Set-Up Time:
  15 Minutes (Approximate) - Per Pair
Approximate Operating Weight: 602 lbs.
Warranty: 1 Year

CODE	ATTACHMENT IDENTIFIER	DESCRIPTION	SUGGESTED LIST PRICE USD ($)

Select One Code From Each Required Category

BASE MACHINE

1644XF	BB5096 Standard Duty Box Blade *Order in multiples of two.*	1,348.00

BB5096 Standard Duty Box Blade
Continued

THIS PAGE IS INTENTIONALLY LEFT BLANK

BB5048L Limited Category 1 Economy Duty Box Blade

Equipment for Base Machine

3-Point Hitch:
  Limited Category I
iMatch Compatible: Yes
Working Width: 50 In.
Tractor HP: 18 PTO HP max;
  see compatibility charts for
  specific model of tractors
Tailgate: Fixed
Shipping Weight:
  778 lbs. - (Pair)
Shanks: (5) Replaceable
Shank Type:
  3-Position with Holes and 1/2 In. Pin
Scarifier Points:
  Hardened Steel
End Plate Thickness: 5/16 In.
Moldboard Thickness: 3/16 In.
Moldboard Type: Formed Back
Mast: Bolt On
Duty: Economy Duty
Cutting Edges:
  (2) 3/8 In. x 6 In. Reversible
Assembly/Set-Up Time:
  15 Minutes (Approximate) - Per Pair
Approximate Operating Weight: 360 lbs.
Warranty: 1 Year

CODE	ATTACHMENT IDENTIFIER	DESCRIPTION	SUGGESTED LIST PRICE USD ($)
		Select One Code From Each Required Category	
		BASE MACHINE	
1741XF		BB5048L Limited Category 1 Economy Duty Box Blade *Order in multiples of two.*	717.00

BB5048L Limited Category 1 Economy Duty Box Blade
Continued

THIS PAGE IS INTENTIONALLY LEFT BLANK

BB5060L Limited Category 1 Economy Duty Box Blade

Equipment for Base Machine

3-Point Hitch:
  Limited Category I
iMatch Compatible: Yes
Working Width: 62 In.
Tractor HP: 18 PTO HP max;
  see compatibility charts for
  specific model of tractors
Tailgate: Fixed
Shipping Weight:
  868 lbs. - (Pair)
Shanks: (5) Replaceable
Shank Type:
  3-Position with Holes and 1/2 In. Pin
Scarifier Points:
  Hardened Steel
End Plate Thickness: 5/16 In.
Moldboard Thickness: 3/16 In.
Moldboard Type: Formed Back
Mast: Bolt On
Duty: Economy Duty
Cutting Edges:
  (2) 3/8 In. x 6 In. Reversible
Assembly/Set-Up Time:
  15 Minutes (Approximate) - Per Pair
Approximate Operating Weight: 405 lbs.
Warranty: 1 Year

CODE	ATTACHMENT IDENTIFIER	DESCRIPTION	SUGGESTED LIST PRICE USD ($)
		Select One Code From Each Required Category	
		BASE MACHINE	
1742XF		BB5060L Limited Category 1 Economy Duty Box Blade *Order in multiples of two.*	800.00

BB5060L Limited Category 1 Economy Duty Box Blade
Continued

THIS PAGE IS INTENTIONALLY LEFT BLANK

LL1160 - 5 Ft. Drawn Box Scraper

Equipment for Base Machine

Working Width: 60 In.
Machine Width: 61 In.
Machine Length: 98 In.
Machine Height: 29.5 In.
Approximate Operating Weight: 612 lbs.
Tractor HP (Maximum): 20 to 50 HP
Tailgate: Fixed
Shanks: 6 (Replaceable)
End Plate Thickness: 3/8 In.
Single Hydraulic Cylinder:
  3 In. Bore x 8 In. Stroke
Tires (2): Pneumatic
Wheels (2):
  6 In. Wide x 10 In. Diameter

Cutting Edge:
  5/8 In. Thick x 6 In. Tall
Safety Chains: Yes - Required
Color: Construction Yellow
Assembly/Set-Up Time:
  15 Minutes (Approximate)
Duty: Standard Duty
Warranty: 1 Year

CODE	ATTACHMENT IDENTIFIER	DESCRIPTION	SUGGESTED LIST PRICE USD ($)

Select One Code From Each Required Category

BASE MACHINE

1471XF	LL1160 - 5 Ft. Drawn Box Scraper	3,688.00

LL1160 - 5 Ft. Drawn Box Scraper
Continued

THIS PAGE IS INTENTIONALLY LEFT BLANK

LL1172 - 6 Ft. Drawn Box Scraper

Equipment for Base Machine

Working Width: 72 In.
Machine Width: 73 In.
Machine Length: 98 In.
Machine Height: 29.5 In.
Approximate Operating Weight: 735 lbs.
Tractor HP (Maximum): 20 to 50 HP
Tailgate: Fixed
Shanks: 6 (Replaceable)
End Plate Thickness: 3/8 In.
Single Hydraulic Cylinder:
  3 In. Bore x 8 In. Stroke
Tires (2): Pneumatic
Wheels (2):
  6 In. Wide x 10 In. Diameter

Cutting Edge:
  5/8 In. Thick x 6 In. Tall
Safety Chains: Yes - Required
Color: Construction Yellow
Assembly/Set-Up Time:
  15 Minutes (Approximate)
Duty: Standard Duty
Warranty: 1 Year

CODE	ATTACHMENT IDENTIFIER	DESCRIPTION	SUGGESTED LIST PRICE USD ($)

Select One Code From Each Required Category

BASE MACHINE

1472XF	LL1172 - 6 Ft. Drawn Box Scraper	3,820.00

LL1172 - 6 Ft. Drawn Box Scraper
Continued

THIS PAGE IS INTENTIONALLY LEFT BLANK

LL1208 - 8 Ft. Drawn Box Scraper

Equipment for Base Machine

Working Width: 96 In.
Machine Width: 96.3 In.
Machine Length: 144 In.
Machine Height: 36 In.
Approximate Operating Weight: 1500 lbs.
Tractor HP (Maximum): 35 to 100 HP
Tailgate: Fixed
Lift Axle: Standard Lift Rockshaft
End Plate Thickness: 3/8 In.
Hydraulic Lift Cylinder:
3 In. Bore x 8 In. Stroke
Tires (2): Pneumatic -9.5L15 Implement Tires
Wheels (2):
8 In. Wide x 15 In. Diameter

Cutting Edge:
5/8 In. Thick x 6 In. Tall
Safety Chains: Yes - Required
Color: Construction Yellow
Assembly/Set-Up Time:
60 Minutes (Approximate)
Duty: Standard Duty
Warranty: 1 Year

CODE	ATTACHMENT IDENTIFIER	DESCRIPTION	SUGGESTED LIST PRICE USD ($)
		Select One Code From Each Required Category	
		BASE MACHINE	
1541XF		LL1208 - 8 Ft. Drawn Box Scraper	5,557.00
		AXLE OPTION	
1000		LL12 Standard Lift Axle	In Base Price
1010		LL1208/10 Tilt Axle with Turnbuckle	344.00
1020		LL1208/10 Tilt Axle with Cylinder	832.00
		LIFT CYLINDER AND HOSES	
2000		LL12 Lift Cylinder, Hoses, and Tips Kit	In Base Price
2095		Less LL12 Lift Cylinder, Hoses, and Tips Kit	-516.00
		TRANSPORT WHEELS AND TIRES	
3000		9.5L-15 Tires on 6-Bolt Rims (2)	In Base Price
3095		Less 9.5L-15 Tires on 6-Bolt Rims (2)	-713.00
		ATTACHMENTS FOR FIELD CONVERSION	
		Miscellaneous:	
	5DDA00100	9.5L-15 Tires on 6-Bolt Rims (2)	770.04
	5DDA00096	LL12 Series - Lift Cylinder Kit	557.28
	5DDA00098	LL12 Series - Tilt Cylinder Kit	671.76
	5DDA00097	LL12 Series - Turnbuckle	91.84

LL1208 - 8 Ft. Drawn Box Scraper
Continued

THIS PAGE IS INTENTIONALLY LEFT BLANK

LL1210 - 10 Ft. Drawn Box Scraper

Equipment for Base Machine

Working Width: 120 In.
Machine Width: 120.3 In.
Machine Length: 144 In.
Machine Height: 36 In.
Approximate Operating Weight: 1600 lbs.
Tractor HP (Maximum): 35 to 125 HP
Tailgate: Fixed
Lift Axle: Standard Lift Rockshaft
End Plate Thickness: 3/8 In.
Hydraulic Lift Cylinder:
3 In. Bore x 8 In. Stroke
Tires (2): Pneumatic -9.5L15 Implement Tires
Wheels (2):
8 In. Wide x 15 In. Diameter

Cutting Edge:
5/8 In. Thick x 6 In. Tall
Safety Chains: Yes - Required
Color: Construction Yellow
Assembly/Set-Up Time:
60 Minutes (Approximate)
Duty: Standard Duty
Warranty: 1 Year

CODE	ATTACHMENT IDENTIFIER	DESCRIPTION	SUGGESTED LIST PRICE USD ($)
		Select One Code From Each Required Category	
		BASE MACHINE	
1542XF		LL1210 - 10 Ft. Drawn Box Scraper	6,030.00
		AXLE OPTION	
1000		LL12 Standard Lift Axle	In Base Price
1010		LL1208/10 Tilt Axle with Turnbuckle	344.00
1020		LL1208/10 Tilt Axle with Cylinder	832.00
		LIFT CYLINDER AND HOSES	
2000		LL12 Lift Cylinder, Hoses, and Tips Kit	In Base Price
2095		Less LL12 Lift Cylinder, Hoses, and Tips Kit	-516.00
		TRANSPORT WHEELS AND TIRES	
3000		9.5L-15 Tires on 6-Bolt Rims (2)	In Base Price
3095		Less 9.5L-15 Tires on 6-Bolt Rims (2)	-713.00
		ATTACHMENTS FOR FIELD CONVERSION	
		Miscellaneous:	
	5DDA00100	9.5L-15 Tires on 6-Bolt Rims (2)	770.04
	5DDA00096	LL12 Series - Lift Cylinder Kit	557.28
	5DDA00098	LL12 Series - Tilt Cylinder Kit	671.76
	5DDA00097	LL12 Series - Turnbuckle	91.84

LL1210 - 10 Ft. Drawn Box Scraper
Continued

THIS PAGE IS INTENTIONALLY LEFT BLANK

LL1212 - 12 Ft. Drawn Box Scraper

Equipment for Base Machine

Working Width: 144 In.
Machine Width: 143 In.
Machine Length: 144 In.
Machine Height: 36 In.
Approximate Operating Weight: 1700 lbs.
Tractor HP (Maximum): 35 to 125 HP
Tailgate: Fixed
Lift Axle: Standard Lift Rockshaft
End Plate Thickness: 3/8 In.
Hydraulic Lift Cylinder:
3 In. Bore x 8 In. Stroke
Tires (2): Pneumatic -9.5L15 Implement Tires
Wheels (2):
8 In. Wide x 15 In. Diameter

Cutting Edge:
5/8 In. Thick x 6 In. Tall
Safety Chains: Yes - Required
Color: Construction Yellow
Assembly/Set-Up Time:
60 Minutes (Approximate)
Duty: Standard Duty
Warranty: 1 Year

CODE	ATTACHMENT IDENTIFIER	DESCRIPTION	SUGGESTED LIST PRICE USD ($)
		Select One Code From Each Required Category	
		BASE MACHINE	
1543XF		LL1212 - 12 Ft. Drawn Box Scraper	6,318.00
		AXLE OPTION	
1000		LL12 Standard Lift Axle	In Base Price
1010		LL1212 Tilt Axle with Turnbuckle	344.00
1020		LL1212 Tilt Axle with Cylinder	832.00
		LIFT CYLINDER AND HOSES	
2000		LL12 Lift Cylinder, Hoses, and Tips Kit	In Base Price
2095		Less LL12 Lift Cylinder, Hoses, and Tips Kit	-516.00
		TRANSPORT WHEELS AND TIRES	
3000		9.5L-15 Tires on 6-Bolt Rims (2)	In Base Price
3095		Less 9.5L-15 Tires on 6-Bolt Rims (2)	-713.00
		ATTACHMENTS FOR FIELD CONVERSION	
		Miscellaneous:	
	5DDA00100	9.5L-15 Tires on 6-Bolt Rims (2)	770.04
	5DDA00096	LL12 Series - Lift Cylinder Kit	557.28
	5DDA00098	LL12 Series - Tilt Cylinder Kit	671.76
	5DDA00097	LL12 Series - Turnbuckle	91.84

LL1212 - 12 Ft. Drawn Box Scraper
Continued

THIS PAGE IS INTENTIONALLY LEFT BLANK

LL1372 - 6 Ft. Drawn Box Scraper

Equipment for Base Machine

Working Width: 72 In.
Machine Width: 74 In.
Machine Length: 165 In.
Machine Height: 49 In.
Approximate Operating Weight: 1600 lbs.
Tractor HP (Maximum): 35 to 100
Tailgate: Fixed
End Plate Thickness: 1/2 In.
Dual Hydraulic Cylinders: 3 In. Bore x
  8 In. Stroke (1 Rear SCV Required)
Tires (4): Pneumatic
Wheels (4):
  6 In. Wide x 10 In. Diameter
Cutting Edge:
  5/8 In. Thick x 6 In. Tall

Safety Chains: Yes - Required
Color: Construction Yellow
Assembly/Set-Up Time:
  30 Minutes (Approximate)
Shipping Configuration:
  2 Pieces (Box Blade and Tongue)
Duty: Medium Duty
Warranty: 6 Months

CODE	ATTACHMENT IDENTIFIER	DESCRIPTION	SUGGESTED LIST PRICE USD ($)
		Select One Code From Each Required Category	
		BASE MACHINE	
1481XF		LL1372 - 6 Ft. Drawn Box Scraper	8,067.00
		SCARIFIER BAR	
1000		6 Ft. Scarifier Bar Attachment	2,386.00
1095		Less Scarifier Bar Attachment	In Base Price
		REAR SMOOTH ROLLER	
2000		6 Ft. Rear Smooth 12 In. Drum Roller Attachment	2,434.00
2095		Less Rear Smooth Roller	In Base Price
		ATTACHMENTS - ORDER AS DESIRED	
9000		Rear Hitch Assembly	246.00
9030		6 Ft. Double Rear 12 In. Diameter Basket Roller Pulverizer	2,576.00
9040		6 Ft. 3 Bar Spring Tine Harrow	2,058.00
		ATTACHMENTS FOR FIELD CONVERSION	
		Miscellaneous:	
	5DDA00020	3 Bar Spring Tine Harrow - 6 Ft.	2,222.64
	5DDA00017	Double Rear 12 In. Diameter Basket Roller Pulverizer - 6 Ft.	2,782.08
	5DDA00007	Rear Hitch Assembly (LL13 Series)	265.68
	5DDA00023	Rear Smooth 12 In. Drum Roller Attachment - 6 Ft.	2,628.72
	5DDA00029	Scarifier Bar Attachment - 6 Ft.	2,576.88

LL1372 - 6 Ft. Drawn Box Scraper
Continued

LL1384 - 7 Ft. Drawn Box Scraper

Equipment for Base Machine

Working Width: 84 In.
Machine Width: 86 In.
Machine Length: 165 In.
Machine Height: 49 In.
Approximate Operating Weight: 1866 lbs.
Tractor HP (Maximum): 35 to 125 HP
Tailgate: Fixed
End Plate Thickness: 1/2 In.
Dual Hydraulic Cylinders: 3 In. Bore x
  8 In. Stroke (1 Rear SCV Required)
Tires (4): Pneumatic
Wheels (4):
  6 In. Wide x 10 In. Diameter
Cutting Edge:
  5/8 In. Thick x 6 In. Tall

Safety Chains: Yes - Required
Color: Construction Yellow
Assembly/Set-Up Time:
  30 Minutes (Approximate)
Shipping Configuration:
  2 Pieces (Box Blade and Tongue)
Duty: Medium Duty
Warranty: 6 Months

CODE	ATTACHMENT IDENTIFIER	DESCRIPTION	SUGGESTED LIST PRICE USD ($)
		Select One Code From Each Required Category	
		BASE MACHINE	
1482XF		LL1384 - 7 Ft. Drawn Box Scraper	8,193.00
		SCARIFIER BAR	
1000		6 Ft. Scarifier Bar Attachment	2,386.00
1095		Less Scarifier Bar Attachment	In Base Price
		REAR SMOOTH ROLLER	
2000		7 Ft. Rear Smooth 12 In. Drum Roller Attachment	2,488.00
2095		Less Rear Smooth Roller	In Base Price
		ATTACHMENTS - ORDER AS DESIRED	
9000		Rear Hitch Assembly	246.00
9030		7 Ft. Double Rear 12 In. Diameter Basket Roller Pulverizer	2,715.00
9040		7 Ft. 3 Bar Spring Tine Harrow	2,204.00
		ATTACHMENTS FOR FIELD CONVERSION	
		Miscellaneous:	
	5DDA00021	3 Bar Spring Tine Harrow - 7 Ft.	2,380.32
	5DDA00018	Double Rear 12 In. Diameter Basket Roller Pulverizer - 7 Ft.	2,932.20
	5DDA00007	Rear Hitch Assembly (LL13 Series)	265.68
	5DDA00024	Rear Smooth 12 In. Drum Roller Attachment - 7 Ft.	2,687.04
	5DDA00029	Scarifier Bar Attachment - 6 Ft.	2,576.88

LL1384 - 7 Ft. Drawn Box Scraper
Continued

LL1396 - 8 Ft. Drawn Box Scraper

Equipment for Base Machine

Working Width: 96 In.
Machine Width: 98 In.
Machine Length: 165 In.
Machine Height: 49 In.
Approximate Operating Weight: 2133 lbs.
Tractor HP (Maximum): 35 to 125 HP
Tailgate: Fixed
End Plate Thickness: 1/2 In.
Dual Hydraulic Cylinders: 3 In. Bore x
  8 In. Stroke (1 Rear SCV Required)
Tires (4): Pneumatic
Wheels (4):
  6 In. Wide x 10 In. Diameter
Cutting Edge:
  5/8 In. Thick x 6 In. Tall

Safety Chains: Yes - Required
Color: Construction Yellow
Assembly/Set-Up Time:
  30 Minutes (Approximate)
Shipping Configuration:
  2 Pieces (Box Blade and Tongue)
Duty: Medium Duty
Warranty: 6 Months

CODE	ATTACHMENT IDENTIFIER	DESCRIPTION	SUGGESTED LIST PRICE USD ($)
		Select One Code From Each Required Category	
		BASE MACHINE	
1483XF		LL1396 - 8 Ft. Drawn Box Scraper	8,274.00
		SCARIFIER BAR	
1000		8 Ft. Scarifier Bar Attachment	2,204.00
1095		Less Scarifier Bar Attachment	In Base Price
		REAR SMOOTH ROLLER	
2000		8 Ft. Rear Smooth 12 In. Drum Roller Attachment	2,540.00
2095		Less Rear Smooth Roller	In Base Price
		ATTACHMENTS - ORDER AS DESIRED	
9000		Rear Hitch Assembly	246.00
9030		8 Ft. Double Rear 12 In. Diameter Basket Roller Pulverizer	2,840.00
9040		8 Ft. 3 Bar Spring Tine Harrow	2,288.00
		ATTACHMENTS FOR FIELD CONVERSION	
		Miscellaneous:	
	5DDA00022	3 Bar Spring Tine Harrow - 8 Ft.	2,471.04
	5DDA00019	Double Rear 12 In. Diameter Basket Roller Pulverizer - 8 Ft.	3,067.20
	5DDA00007	Rear Hitch Assembly (LL13 Series)	265.68
	5DDA00025	Rear Smooth 12 In. Drum Roller Attachment - 8 Ft.	2,743.20
	5DDA00028	Scarifier Bar Attachment - 8 Ft.	2,380.32

LL1396 - 8 Ft. Drawn Box Scraper
Continued

CA2048E - 4 Ft. Economy Core Aerator

Equipment for Base Machine

Reduces Hard Layer Compaction and
  Increases Turf Vitality
3/8 In. Formed Category I "A" Frame
2 Bronze Bushings per Rotor for
  Wear Resistance on Shaft
3-Point Hitch: Category I
Working Width: 48 In.
Tractor HP: 20 to 50 HP
Spoons:
  (48) 3/4 In. Case Hardened Steel
Spoon Penetration: 4-1/2 In.
Spoons Per Hub: 6
Approximate Shipping Weight: 400 lbs.

Overall Width: 54 In.
iMatch Compatible (Quick-Attach System)
Assembly/Set-Up Time:
  10 Minutes (Approximate)
Approximate Operating Weight: 284 lbs.
1 Year Warranty

CODE	ATTACHMENT IDENTIFIER	DESCRIPTION	SUGGESTED LIST PRICE USD ($)
		Select One Code From Each Required Category	
		BASE MACHINE	
1141XF		CA2048E - 4 Ft. Economy Core Aerator *Order optional weight tanks as attachments.*	2,182.00
		ATTACHMENTS ORDER AS DESIRED	
9000		Steel Weight Tank CA2048E, Quantity 2 (2 Required per Machine) *For sand only.*	541.00
		ATTACHMENTS FOR FIELD CONVERSION	
		Miscellaneous:	
	5BP950958B	French Manual Decal (CA20 Series)	0.00
	5BP0099731	Steel Weight Tank CA2048E, Quantity 1 (2 Required Per Machine) *For sand only.*	270.73

CA2048E - 4 Ft. Economy Core Aerator
Continued

THIS PAGE IS INTENTIONALLY LEFT BLANK

CA2060 - 5 Ft. Standard Duty Core Aerator

Equipment for Base Machine

Reduces Hard Layer Compaction and
  Increases Turf Vitality
3/8 In. Formed Category I "A" Frame
  - Can Hold (2) 170 lb. Sand
  Containers - OPTIONAL
2 Bronze Bushings per Rotor for
  Wear Resistance on Shaft
3-Point Hitch: Category I and Category II
Working Width: 60 In.
Weight Tray: (2) 19 In. x 21 In.
Tractor HP: 25 to 70 HP
Spoons:
  (80) 3/4 In. Case Hardened Steel
Spoon Penetration: 4-1/2 In.
Spoons Per Hub: 8
iMatch Compatible (Quick-Attach System)
Shipping Weight: 500 lbs.
Overall Width: 65 In.
Assembly/Set-Up Time:
  10 Minutes (Approximate)
1 Year Warranty

CODE	ATTACHMENT IDENTIFIER	DESCRIPTION	SUGGESTED LIST PRICE USD ($)
		Select One Code From Each Required Category	
		BASE MACHINE	
1131XF		CA2060 - 5 Ft. Standard Duty Core Aerator *Order optional weight tanks as attachments.*	2,906.00
		ATTACHMENTS ORDER AS DESIRED	
9000		Steel Weight Tank CA2060, Quantity 2 (2 Required per Machine) *For sand only.*	640.00
		ATTACHMENTS FOR FIELD CONVERSION	
		Miscellaneous:	
	5BP950958B	French Manual Decal (CA20 Series)	0.00
	5BP0099734	Steel Weight Tank CA2060, Quantity 1 (2 Required Per Machine) *For sand only.*	320.23

CA2060 - 5 Ft. Standard Duty Core Aerator
Continued

THIS PAGE IS INTENTIONALLY LEFT BLANK

CA2060E - 5 Ft. Economy Core Aerator

Equipment for Base Machine

Reduces Hard Layer Compaction and
  Increases Turf Vitality
3/8 In. Formed Category I "A" Frame
  - Can Hold (2) 125 lb. Sand
  Containers - OPTIONAL
2 Bronze Bushings per Rotor for
  Wear Resistance on Shaft
3-Point Hitch: Category I
Working Width: 60 In.
Weight Tray: (2) 19 In. x 15 In.
Tractor HP: 20 to 50 HP
Spoons:
  (60) 3/4 In. Case Hardened Steel
Spoon Penetration: 4-1/2 In.
Spoons Per Hub: 6
iMatch Compatible (Quick-Attach System)
Approximate Shipping Weight: 400 lbs.
Overall Width: 65 In.
Assembly/Set-Up Time:
  10 Minutes (Approximate)
Approximate Operating Weight: 357 lbs.
1 Year Warranty

CODE	ATTACHMENT IDENTIFIER	DESCRIPTION	SUGGESTED LIST PRICE USD ($)
		Select One Code From Each Required Category	
		BASE MACHINE	
1142XF		CA2060E - 5 Ft. Economy Core Aerator *Order optional weight tanks as attachments.*	2,285.00
		ATTACHMENTS ORDER AS DESIRED	
9000		Steel Weight Tank CA2060E, Quantity 2 (2 Required per Machine) *For sand only.*	569.00
		ATTACHMENTS FOR FIELD CONVERSION	
		Miscellaneous:	
	5BP950958B	French Manual Decal (CA20 Series)	0.00
	5BP0099732	Steel Weight Tank CA2060E, Quantity 1 (2 Required Per Machine) *For sand only.*	284.43

CA2060E - 5 Ft. Economy Core Aerator
Continued

THIS PAGE IS INTENTIONALLY LEFT BLANK

CA2072 - 6 Ft. Standard Duty Core Aerator

Equipment for Base Machine

Reduces Hard Layer Compaction and
  Increases Turf Vitality
3/8 In. Formed Category I "A" Frame
  - Can Hold (2) 220 lb.
  Sand Containers - OPTIONAL
2 Bronze Bushings per Rotor for
  Wear Resistance on Shaft
3-Point Hitch:
  Category I and Category II
Working Width: 72 In.
Weight Tray: (2) 25 In. x 21 In.
Tractor HP: 25 to 70 HP
Spoons:
  (96) 3/4 In. Case Hardened Steel
Spoon Penetration: 4-1/2 In.
Spoons Per Hub: 8
Shipping Weight: 600 lbs.
Overall Width: 78 In.
iMatch Compatible (Quick-Attach System)
Assembly/Set-Up Time:
  10 Minutes (Approximate)
Approximate Operating Weight: 549 lbs.
1 Year Warranty

CODE	ATTACHMENT IDENTIFIER	DESCRIPTION	SUGGESTED LIST PRICE USD ($)
		Select One Code From Each Required Category	
		BASE MACHINE	
1132XF		CA2072 - 6 Ft. Standard Duty Core Aerator *Order optional weight tanks as attachments.*	3,259.00
		ATTACHMENTS ORDER AS DESIRED	
9000		Steel Weight Tank CA2072, Quantity 2 (2 Required per Machine) *For sand only.*	689.00
		ATTACHMENTS FOR FIELD CONVERSION	
		Miscellaneous:	
	5BP950958B	French Manual Decal (CA20 Series)	0.00
	5BP0099735	Steel Weight Tank CA2072, Quantity 1 (2 Required Per Machine) *For sand only.*	344.75

CA2072 - 6 Ft. Standard Duty Core Aerator
Continued

THIS PAGE IS INTENTIONALLY LEFT BLANK

CA2072E - 6 Ft. Economy Core Aerator

Equipment for Base Machine

Reduces Hard Layer Compaction and
  Increases Turf Vitality
3/8 In. Formed Category I "A" Frame
  - Can Hold (2) 160 lb. Sand
  Containers - OPTIONAL
2 Bronze Bushings per Rotor for
  Wear Resistance on Shaft
3-Point Hitch: Category I
Working Width: 72 In.
Weight Tray: (2) 25 In. x 15 In.
Tractor HP: 20 to 50 HP
Spoons:
  (72) 3/4 In. Case Hardened Steel
Spoon Penetration: 4-1/2 In.
Spoons Per Hub: 6
iMatch Compatible (Quick-Attach System)
Approximate Shipping Weight: 450 lbs.
Overall Width: 78 In.
Assembly/Set-Up Time:
  10 Minutes (Approximate)
Approximate Operating Weight: 401 lbs.
1 Year Warranty

CODE	ATTACHMENT IDENTIFIER	DESCRIPTION	SUGGESTED LIST PRICE USD ($)
		Select One Code From Each Required Category	
		BASE MACHINE	
1143XF		CA2072E - 6 Ft. Economy Core Aerator *Order optional weight tanks as attachments.*	2,538.00
		ATTACHMENTS ORDER AS DESIRED	
9000		Steel Weight Tank CA2072E, Quantity 2 (2 Required per Machine) *For sand only.*	604.00
		ATTACHMENTS FOR FIELD CONVERSION	
		Miscellaneous:	
	5BP950958B	French Manual Decal (CA20 Series)	0.00
	5BP0099733	Steel Weight Tank CA2072E, Quantity 1 (2 Required Per Machine) *For sand only.*	302.21

CA2072E - 6 Ft. Economy Core Aerator
Continued

THIS PAGE IS INTENTIONALLY LEFT BLANK

PC1001 Integral One Row Cultivator

Equipment for Base Machine

Hitch:
  Lift-type, Category I,
  iMatch Compatible
Working Row Width:
  30 to 60 In. (762 to 1524 mm)
Transport Length:
  37 In. (939.8 mm)
Transport Width:
  50.5 In. (1,282.7 mm)
Transport Height:
  36 In. (914.4 mm)
Tractor Engine HP Range:
  25 - 45 HP
Standard Tines:
  6 Curved and Reversible Tines,
  1.75 In. (44.45 mm) x 10 In. (254 mm)
Tine Spacing: Adjustable
Parking Stand Included

CODE	ATTACHMENT IDENTIFIER	DESCRIPTION	SUGGESTED LIST PRICE USD ($)

Select One Code From Each Required Category

BASE MACHINE

3441XF		PC1001 Integral One Row Cultivator *Order in multiples of two.*	392.00

ATTACHMENTS FOR FIELD CONVERSION

		Miscellaneous:	
	5TITE511154	French Kit - Includes Operator's Manual, Parts Catalog and Safety Decals *PC1001 and PC1072*	13.21

PC1001 Integral One Row Cultivator
Continued

THIS PAGE IS INTENTIONALLY LEFT BLANK

PC1072 - 6 Ft. Integral Field Cultivator (13 S-tines)

Equipment for Base Machine

Hitch:
  Lift-type, Category I,
  iMatch Compatible
Working Width:
  72 In. (1,828.8 mm)
Transport Length:
  37.5 In. (952.5 mm)
Transport Width:
  73.25 In. (1,860.6 mm)
Transport Height:
  39 In. (990.6 mm)
Tractor Engine HP Range:
  25 - 45 HP
Standard Tines:
  13 Curved and Reversible Tines,
  1.25 In. (31.75 mm) x 8 In. (203.2 mm)
Tine Spacing: Adjustable

CODE	ATTACHMENT IDENTIFIER	DESCRIPTION	SUGGESTED LIST PRICE USD ($)

Select One Code From Each Required Category

BASE MACHINE

3442XF		PC1072 - 6 Ft. Integral Field Cultivator (13 S-tines) *Order in multiples of two.*	832.00

ATTACHMENTS FOR FIELD CONVERSION

		Miscellaneous:	
	5TITE511154	French Kit - Includes Operator's Manual, Parts Catalog and Safety Decals *PC1001 and PC1072*	13.21

PC1072 - 6 Ft. Integral Field Cultivator (13 S-tines)
Continued

THIS PAGE IS INTENTIONALLY LEFT BLANK

BL1130 - 3 Pt. Mount Debris Blower - U.S.

Equipment for Base Machine

Function: Debris Blower
Length: 47 1/8 In. (1,197 mm)
Width: 50 In. (1,270 mm)
Height: 48 3/4 In. (1,238.3 mm)
Operating Weight: 689 lb. (312.5 kg)
Fan Diameter: 29 1/2 In. (749.3 mm)
Fan Width: 10 in. (254 mm)
Number of Fan Blades: 12
Fan Speed: 1455 RPM
Air Flow: 6,061 cfm (171 cu. meter per minute)
Air Velocity: 141 mph (227 kph)
Air Velocity: 12,400 fpm (3,779.5 mpm)

Outlet Size: 10 5/8 x 6 5/8 In. (269.9 x 168.3 mm)
Air Direction: left or right by moving lever
Cat. 1 & 2, iMatch and Quick Hitch Compatible
Pneumatic gauge wheel standard
Approximate Set-Up Time: 30 Minutes

CODE	ATTACHMENT IDENTIFIER	DESCRIPTION	SUGGESTED LIST PRICE USD ($)
		Select One Code From Each Required Category	
		BASE MACHINE	
1571XF		BL1130 - 3 Pt. Mount Debris Blower - U.S.	5,260.00

BL1130 - 3 Pt. Mount Debris Blower - U.S.
Continued

THIS PAGE IS INTENTIONALLY LEFT BLANK

BL2130 - Hydraulic Loader Mount Debris Blower with HP2025 Hydraulic Power Unit - U.S.

Equipment for Base Machine

Function: Debris Blower
Length: 47 1/8 In. (1,197 mm)
Width: 50 In. (1,270 mm)
Height: 48 3/4 In. (1,238.3 mm)
Operating Weight: 689 lb. (312.5 kg)
Fan Diameter: 29 1/2 In. (749.3 mm)
Fan Width: 10 in. (254 mm)
Number of Fan Blades: 12
Fan Speed: 1455 RPM
Air Flow: 6,061 cfm (171 cu. meter per minute)
Air Velocity: 141 mph (227 kph)
Air Velocity: 12,400 fpm (3,779.5 mpm)
Outlet Size: 10 5/8 x 6 5/8 In. (269.9 x 168.3 mm)
Air Direction: left or right by moving lever
Pneumatic gauge wheel standard
Approximate Set-Up Time: 30 Minutes
Function: Hydraulic Power Unit
Pressure: 2700 psi
Flow: 16 gpm
Reservoir Capacity: 15 gal.
System Capacity: 17 gal.
System Features: Pressure relieve valve, filter, temperature
and oil level gauge, and thermal protection switch
Hoses, Tips, and Brackets included
Tractor RPM: 540 RPM
PTO Manufacturer: Comer
Parking Stand: Standard
Hitch Category: Category I
Quick Hitch Compatibility:
iMatch Compatible
Approximate Set-Up Time: 120 Minutes

CODE	ATTACHMENT IDENTIFIER	DESCRIPTION	SUGGESTED LIST PRICE USD ($)
		Select One Code From Each Required Category	
		BASE MACHINE	
1581XF		BL2130 - Hydraulic Loader Mount Debris Blower with HP2025 Hydraulic Power Unit - U.S. *Must be used with HP2025 or HP2134 Hydraulic Power Pack Units.*	11,559.00
		HYDRAULIC POWER UNITS	
1000		HP2025 - Hydraulic Power Unit, 25 HP *Requires wiring harness, 5RDF0039, when changing front implement attachments.*	In Base Price
1010		HP2134 - Hydraulic Power Unit, 34 HP *Requires wiring harness, 5RDF0039, when changing front implement attachments.*	104.00
1095		Less HP2025 Hydraulic Power Unit	-6,304.00
		OIL COOLER	
2000		Oil Cooler for HP2025 and HP2134 Hydraulic Power Units *Includes high efficiency oil cooler, electric fan, bolted support, hoses, fittings and installation instructions. Recommended for application generating high heat.* *Not available with option Code 1095.*	In Base Price
2095		Less Oil Cooler	-1,660.00
		ATTACHMENTS - ORDER AS DESIRED	
9040		Additional Wiring Harness for HP2025 and HP2134 Hydraulic Power Units for Open Operator Station Tractors *Includes complete wiring harness from battery to switch in the console.* *Not available with option Code 1095.*	92.00
		ATTACHMENTS FOR FIELD CONVERSION	

BL2130 - Hydraulic Loader Mount Debris Blower with HP2025 Hydraulic Power Unit - U.S.

Continued

CODE	ATTACHMENT IDENTIFIER	DESCRIPTION	SUGGESTED LIST PRICE USD ($)
		ATTACHMENTS FOR FIELD CONVERSION ...Continued...	
		Miscellaneous:	
	5RDF0038	Additional Wiring Harness for HP2025 and HP2134 Hydraulic Power Units for Open Operator Station Tractors *Includes complete wiring harness from battery to switch in the console.*	100.04
	5RDF0036	Oil Cooler for HP2025 and HP2134 Hydraulic Power Units *Includes high efficiency oil cooler, electric fan, bolted support, hoses, fittings and installation instructions. Recommended for application generating high heat.*	1,816.59
	5RDF0039	Wiring Harness for HP2025 and HP2134 Hydraulic Power Units to control Loader Mounted Attachment *Includes complete wiring harness from switch in the console to 3 cavities connectors for front implements.*	88.55

BL1130 - 3 Pt. Mount Debris Blower - Canada

Equipment for Base Machine

Function: Debris Blower
Length: 47 1/8 In. (1,197 mm)
Width: 50 In. (1,270 mm)
Height: 48 3/4 In. (1,238.3 mm)
Operating Weight: 689 lb. (312.5 kg)
Fan Diameter: 29 1/2 In. (749.3 mm)
Fan Width: 10 in. (254 mm)
Number of Fan Blades: 12
Fan Speed: 1455 RPM
Air Flow: 6,061 cfm (171 cu. meter per minute)
Air Velocity: 141 mph (227 kph)
Air Velocity: 12,400 fpm (3,779.5 mpm)

Outlet Size: 10 5/8 x 6 5/8 In. (269.9 x 168.3 mm)
Air Direction: left or right by moving lever
Cat. 1 & 2, iMatch and Quick Hitch Compatible
Pneumatic gauge wheel standard
Approximate Set-Up Time: 30 Minutes

CODE	ATTACHMENT IDENTIFIER	DESCRIPTION	SUGGESTED LIST PRICE USD ($)
		Select One Code From Each Required Category	
		BASE MACHINE	
157AXF		BL1130 - 3 Pt. Mount Debris Blower - Canada	5,340.10

BL1130 - 3 Pt. Mount Debris Blower - Canada
Continued

THIS PAGE IS INTENTIONALLY LEFT BLANK

BL2130 - Hydraulic Loader Mount Debris Blower with HP2025 Hydraulic Power Unit - Canada

Equipment for Base Machine

Function: Debris Blower
Length: 47 1/8 In. (1,197 mm)
Width: 50 In. (1,270 mm)
Height: 48 3/4 In. (1,238.3 mm)
Operating Weight: 689 lb. (312.5 kg)
Fan Diameter: 29 1/2 In. (749.3 mm)
Fan Width: 10 in. (254 mm)
Number of Fan Blades: 12
Fan Speed: 1455 RPM
Air Flow: 6,061 cfm (171 cu. meter per minute)
Air Velocity: 141 mph (227 kph)
Air Velocity: 12,400 fpm (3,779.5 mpm)
Outlet Size: 10 5/8 x 6 5/8 In. (269.9 x 168.3 mm)
Air Direction: left or right by moving lever
Pneumatic gauge wheel standard
Approximate Set-Up Time: 30 Minutes
Function: Hydraulic Power Unit
Pressure: 2700 psi
Flow: 16 gpm
Reservoir Capacity: 15 gal.
System Capacity: 17 gal.
System Features: Pressure relieve valve, filter, temperature
and oil level gauge, and thermal protection switch
Hoses, Tips, and Brackets included
Tractor RPM: 540 RPM
PTO Manufacturer: Comer
Parking Stand: Standard
Hitch Category: Category I
Quick Hitch Compatibility:
iMatch Compatible
Approximate Set-Up Time: 120 Minutes

CODE	ATTACHMENT IDENTIFIER	DESCRIPTION	SUGGESTED LIST PRICE USD ($)
		Select One Code From Each Required Category	
		BASE MACHINE	
158AXF		BL2130 - Hydraulic Loader Mount Debris Blower with HP2025 Hydraulic Power Unit - Canada *Must order HP2025 or HP2134 Hydraulic Power Pack Unit to complete the package.*	11,735.03
		HYDRAULIC POWER UNITS	
1000		HP2025 - Hydraulic Power Unit, 25 HP *Requires wiring harness, 5RDF0039, when changing front implement attachments.*	In Base Price
1010		HP2134 - Hydraulic Power Unit, 34 HP *Requires wiring harness, 5RDF0039, when changing front implement attachments.*	105.58
1095		Less HP2025 Hydraulic Power Unit	-6,400.00
		OIL COOLER	
2000		Oil Cooler for HP2025 and HP2134 Hydraulic Power Units *Includes high efficiency oil cooler, electric fan, bolted support, hoses, fittings and installation instructions. Recommended for application generating high heat.* *Not available with option Code 1095.*	In Base Price
2095		Less Oil Cooler	-1,685.28
		ATTACHMENTS - ORDER AS DESIRED	
9040		Additional Wiring Harness for HP2025 and HP2134 Hydraulic Power Units for Open Operator Station Tractors *Includes complete wiring harness from battery to switch in the console.* *Not available with option Code 1095.*	93.40

BL2130 - Hydraulic Loader Mount Debris Blower with HP2025 Hydraulic Power Unit - Canada

Continued

CODE	ATTACHMENT IDENTIFIER	DESCRIPTION	SUGGESTED LIST PRICE USD ($)
		ATTACHMENTS FOR FIELD CONVERSION	
		Miscellaneous:	
	5RDF0038	Additional Wiring Harness for HP2025 and HP2134 Hydraulic Power Units for Open Operator Station Tractors *Includes complete wiring harness from battery to switch in the console.*	100.04
	5RDF0036	Oil Cooler for HP2025 and HP2134 Hydraulic Power Units *Includes high efficiency oil cooler, electric fan, bolted support, hoses, fittings and installation instructions. Recommended for application generating high heat.*	1,816.59
	5RDF0039	Wiring Harness for HP2025 and HP2134 Hydraulic Power Units to control Loader Mounted Attachment *Includes complete wiring harness from switch in the console to 3 cavities connectors for front implements.*	88.55

LP1048 Standard Drawn Land Plane

Equipment for Base Machine

Working Width: 48 In.
Shipping Weight: 445 lbs.
End Plate Thickness: 3/16 In.
Duty: Light Duty
Cutting Edges: (2)
Assembly/Set-Up Time: 15 Minutes
Approximate Operating Weight: 365 lbs.

Warranty: 1 Year

CODE	ATTACHMENT IDENTIFIER	DESCRIPTION	SUGGESTED LIST PRICE USD ($)
		Select One Code From Each Required Category	
		BASE MACHINE	
1441XF		LP1048 Standard Drawn Land Plane	1,338.00

LP1048 Standard Drawn Land Plane
Continued

THIS PAGE IS INTENTIONALLY LEFT BLANK

LP1060 Standard Drawn Land Plane

Equipment for Base Machine

Working Width: 60 In.
Shipping Weight: 495 lbs.
End Plate Thickness: 3/16 In.
Duty: Light Duty
Cutting Edges: (2)
Assembly/Set-Up Time: 15 Minutes
Approximate Operating Weight: 415 lbs.

Warranty: 1 Year

CODE	ATTACHMENT IDENTIFIER	DESCRIPTION	SUGGESTED LIST PRICE USD ($)
		Select One Code From Each Required Category	
		BASE MACHINE	
1442XF		LP1060 Standard Drawn Land Plane	1,355.00

LP1060 Standard Drawn Land Plane
Continued

THIS PAGE IS INTENTIONALLY LEFT BLANK

LP1160 - 5 Ft. 3-Point Land Plane

Equipment for Base Machine

3-Point Hitch: Category I
iMatch Compatible (Quick-Attach System)
Working Width: 60 In.
Tractor HP Recommendation: 18 to 50 HP
Skid Shoes: Weld on, 3/16 In.
Shipping Weight: 573 lbs.
End Plate Thickness: 3/16 In.
Duty: Standard Duty
Cutting Edges: (2) Reversible

Assembly/Set-Up Time: 10 Minutes
Approximate Operating Weight: 520 lbs.
Warranty: 1 Year

CODE	ATTACHMENT IDENTIFIER	DESCRIPTION	SUGGESTED LIST PRICE USD ($)

Select One Code From Each Required Category

BASE MACHINE

1451XF		LP1160 - 5 Ft. 3-Point Land Plane	1,358.00

ATTACHMENTS FOR FIELD CONVERSION

Miscellaneous:

	5TL15746	French Kit - Includes Operator's Manual and Safety Decals (LP11 Series)	35.47

LP1160 - 5 Ft. 3-Point Land Plane
Continued

THIS PAGE IS INTENTIONALLY LEFT BLANK

LP1172 - 6 Ft. 3-Point Land Plane

Equipment for Base Machine

3-Point Hitch: Category I
iMatch Compatible (Quick-Attach System)
Working Width: 72 In.
Tractor HP Recommendation: 18 to 50 HP
Skid Shoes: Weld on, 3/16 In.
Shipping Weight: 628 lbs.
End Plate Thickness: 3/16 In.
Duty: Standard Duty
Cutting Edges: (2) Reversible

Assembly/Set-Up Time: 10 Minutes
Approximate Operating Weight: 548 lbs.
Warranty: 1 Year

CODE	ATTACHMENT IDENTIFIER	DESCRIPTION	SUGGESTED LIST PRICE USD ($)
		Select One Code From Each Required Category	
		BASE MACHINE	
1452XF		LP1172 - 6 Ft. 3-Point Land Plane	1,434.00
		ATTACHMENTS FOR FIELD CONVERSION	
		Miscellaneous:	
	5TL15746	French Kit - Includes Operator's Manual and Safety Decals (LP11 Series)	35.47

LP1172 - 6 Ft. 3-Point Land Plane
Continued

THIS PAGE IS INTENTIONALLY LEFT BLANK

LP1184 - 7 Ft. 3-Point Land Plane

Equipment for Base Machine

3-Point Hitch: Category I and II
iMatch Compatible (Quick-Attach System)
Working Width: 84 In.
Tractor HP Recommendation: 22 to 75 HP
Skid Shoes: Weld on, 3/16 In.
Shipping Weight: 684 lbs.
End Plate Thickness: 3/16 In.
Duty: Standard Duty
Cutting Edges: (2) Reversible

Assembly/Set-Up Time: 10 Minutes
Approximate Operating Weight: 604 lbs.
Warranty: 1 Year

CODE	ATTACHMENT IDENTIFIER	DESCRIPTION	SUGGESTED LIST PRICE USD ($)
		Select One Code From Each Required Category	
		BASE MACHINE	
1453XF		LP1184 - 7 Ft. 3-Point Land Plane	1,546.00
		ATTACHMENTS FOR FIELD CONVERSION	
		Miscellaneous:	
	5TL15746	French Kit - Includes Operator's Manual and Safety Decals (LP11 Series)	35.47

LP1184 - 7 Ft. 3-Point Land Plane
Continued

THIS PAGE IS INTENTIONALLY LEFT BLANK

LP1196 - 8 Ft. 3-Point Land Plane

Equipment for Base Machine

3-Point Hitch: Category I and II
iMatch Compatible (Quick-Attach System)
Working Width: 96 In.
Tractor HP Recommendation: 22 to 75 HP
Skid Shoes: Weld on, 3/16 In.
Shipping Weight: 732 lbs.
End Plate Thickness: 3/16 In.
Duty: Standard Duty
Cutting Edges: (2) Reversible
Assembly/Set-Up Time:

Unit Arrives Fully Assembled
Approximate Operating Weight: 652 lbs.
Warranty: 1 Year

CODE	ATTACHMENT IDENTIFIER	DESCRIPTION	SUGGESTED LIST PRICE USD ($)

Select One Code From Each Required Category

BASE MACHINE

1454XF		LP1196 - 8 Ft. 3-Point Land Plane	1,560.00

ATTACHMENTS FOR FIELD CONVERSION

Miscellaneous:

	5TL15746	French Kit - Includes Operator's Manual and Safety Decals (LP11 Series)	35.47

LP1196 - 8 Ft. 3-Point Land Plane
Continued

THIS PAGE IS INTENTIONALLY LEFT BLANK

LP1207 - 7 Ft. Heavy Duty 3-Point Land Plane

Equipment for Base Machine

Working Width: 84 In.
Shipping Weight: 1,048 lbs.
Operating Weight: 998 lbs.
3 Pt. Cat. 1 & 2
iMatch Compatible (Quick-Attach System)
Cat. 2 Quick Couple Compatible (Quick-Attach System)
Implement Code: 57.6
End Plate Thickness: 3/16 In.
Duty: Light Duty
Cutting Edges: (2) 1/2 x 6 in. Reversible

Adjustable Skid Shoes
Skid Shoe Thickness: 3/8 in.
Scarifier Shanks: (4) Available -Optional
Assembly/Set-Up Time: 15 Minutes
Warranty: 1 Year

Ballasting may be required. Please see your tractor operator's manual and your John Deere dealer.

CODE	ATTACHMENT IDENTIFIER	DESCRIPTION	SUGGESTED LIST PRICE USD ($)
		Select One Code From Each Required Category	
		BASE MACHINE	
1631XF		LP1207 - 7 Ft. Heavy Duty 3-Point Land Plane	2,545.00
		ATTACHMENTS FOR FIELD CONVERSION	
		Miscellaneous:	
	5TL1207KT	Scarifier Kit (LP1207)	150.52

LP1207 - 7 Ft. Heavy Duty 3-Point Land Plane
Continued

THIS PAGE IS INTENTIONALLY LEFT BLANK

LP1208 - 8 Ft. Heavy Duty 3-Point Land Plane

Equipment for Base Machine

Working Width: 96 In.
Shipping Weight: 1,160 lbs.
Operating Weight: 1,110 lbs.
3 Pt. Cat. 1 & 2
iMatch Compatible (Quick-Attach System)
Cat. 2 Quick Couple Compatible (Quick-Attach System)
Implement Code: 64.1
End Plate Thickness: 3/16 In.
Duty: Light Duty
Cutting Edges: (2) 1/2 x 6 in. Reversible

Adjustable Skid Shoes
Skid Shoe Thickness: 3/8 in.
Scarifier Shanks: (6) Available -Optional
Assembly/Set-Up Time: 15 Minutes
Warranty: 1 Year

Ballasting may be required. Please see your tractor operator's manual and your John Deere dealer.

CODE	ATTACHMENT IDENTIFIER	DESCRIPTION	SUGGESTED LIST PRICE USD ($)
		Select One Code From Each Required Category	
		BASE MACHINE	
1632XF		LP1208 - 8 Ft. Heavy Duty 3-Point Land Plane	2,862.00
		ATTACHMENTS FOR FIELD CONVERSION	
		Miscellaneous:	
	5TL1208KT	Scarifier Kit (LP1208)	243.30

LP1208 - 8 Ft. Heavy Duty 3-Point Land Plane
Continued

THIS PAGE IS INTENTIONALLY LEFT BLANK

LP1210 - 10 Ft. Heavy Duty 3-Point Land Plane

Equipment for Base Machine

Working Width: 120 In.
Shipping Weight: 1,304 lbs.
Operating Weight: 1,254 lbs.
3 Pt. Cat. 2
Cat. 2 Quick Couple Compatible (Quick-Attach System)
Implement Code: 72.4
End Plate Thickness: 3/16 In.
Duty: Light Duty
Cutting Edges: (2) 1/2 x 6 in. Reversible
Adjustable Skid Shoes
Skid Shoe Thickness: 3/8 in.
Scarifier Shanks: (8) Available -Optional
Assembly/Set-Up Time: 15 Minutes
Warranty: 1 Year

Ballasting may be required. Please see your tractor operator's manual and your John Deere dealer.

CODE	ATTACHMENT IDENTIFIER	DESCRIPTION	SUGGESTED LIST PRICE USD ($)
		Select One Code From Each Required Category	
		BASE MACHINE	
1633XF		LP1210 - 10 Ft. Heavy Duty 3-Point Land Plane	3,250.00
		ATTACHMENTS FOR FIELD CONVERSION	
		Miscellaneous:	
	5TL1210KT	Scarifier Kit (LP1210)	324.74

LP1210 - 10 Ft. Heavy Duty 3-Point Land Plane
Continued

THIS PAGE IS INTENTIONALLY LEFT BLANK

LR2060L - 5 Ft. Standard Duty Landscape Rake - Limited Category I

Equipment for Base Machine

Tine Dimensions:
  5/16 In. x 1 In. x 12 In. Spring Steel
Tine Spacing: 30 at 1 In.
Working Width: 60 In.
Tractor HP (Maximum): 25 HP
Parking Stand - Standard
Raking Positions:
  5 Forward (0, 15, 30 Degrees),
  5 Reverse (0, 15 Degrees)
3-Point Hitch:
  Limited Category I (Aftermarket
  Category 0 Lift Pins Available)
Pivot: 360 Degrees

Operating Weight: 168 lbs.
Shipping Weight:
  422 lbs. (Quantity of 2)
Assembly/Set-Up Time: 30 Minutes
Packaged Two Per Crate
Gauge Wheels: Optional
Warranty: 1 Year

CODE	ATTACHMENT IDENTIFIER	DESCRIPTION	SUGGESTED LIST PRICE USD ($)
		Select One Code From Each Required Category	
		BASE MACHINE	
1191XF		LR2060L - 5 Ft. Standard Duty Landscape Rake - Limited Category I *Order in multiples of two.*	765.00
		ATTACHMENTS FOR FIELD CONVERSION	
		Miscellaneous:	
	5WS343465	Dual Gauge Wheel Kit (LR2060L)	409.32

LR2060L - 5 Ft. Standard Duty Landscape Rake - Limited Category I
Continued

THIS PAGE IS INTENTIONALLY LEFT BLANK

LR2072 - 6 Ft. Standard Duty Landscape Rake

Equipment for Base Machine

Duty: Standard Duty
Rake Width: 72 In.
3-Point Hitch:
  Category I
Tractor HP:
  19 to 40 HP
Tine Dimension:
  5/16 In. x 1 In. Spring Steel
Tine Spacing: 36 at 1 In.
Raking Positions:
  5 Forward (0, 15, 30 Degree) Each Side
  - 3 Reverse (0, 15 Degree) Each Side
Parking Stand: Standard
Approximate Operating Weight: 200 lbs.
Shipping Weight:
  486 lbs. (Quantity 2)
Assembly/Set-Up Time:
  30 Minutes (Approximate)
Pivot: 360 Degrees
Packaged 2 per Crate
Gauge Wheel Kit
  (Includes Two Wheels and Arms): Optional
Warranty: 1 Year

CODE	ATTACHMENT IDENTIFIER	DESCRIPTION	SUGGESTED LIST PRICE USD ($)

Select One Code From Each Required Category

BASE MACHINE

1181XF		LR2072 - 6 Ft. Standard Duty Landscape Rake *Order in multiples of two.*	868.00

ATTACHMENTS FOR FIELD CONVERSION

		Miscellaneous:	
	5WS341775	Dual Gauge Wheel Kit (LR2072, LR2084, LR2172, LR2184 and LR2196)	407.00

LR2072 - 6 Ft. Standard Duty Landscape Rake
Continued

THIS PAGE IS INTENTIONALLY LEFT BLANK

LR2084 - 7 Ft. Standard Duty Landscape Rake

Equipment for Base Machine

Duty: Standard Duty
Rake Width: 84 In.
3-Point Hitch:
  Category I
Tractor HP:
  19 to 40 HP
Tine Dimension:
  5/16 In. x 1 In. Spring Steel
Tine Spacing: 42 at 1 In.
Raking Positions:
  5 Forward (0, 15, 30 Degree) Each Side
  - 3 Reverse (0, 15 Degree) Each Side
Parking Stand: Standard
Pivot: 360 Degrees
Approximate Operating Weight:
  221 lbs.
Approximate Shipping Weight:
  528 lbs. (Quantity 2)
Assembly/Set-Up Time:
  30 Minutes (Approximate)
Packaged 2 per Crate
Gauge Wheel Kit
  (Includes Two Wheels and Arms): Optional
Warranty: 1 Year

CODE	ATTACHMENT IDENTIFIER	DESCRIPTION	SUGGESTED LIST PRICE USD ($)

Select One Code From Each Required Category

BASE MACHINE

1182XF		LR2084 - 7 Ft. Standard Duty Landscape Rake *Order in multiples of two.*	979.00

ATTACHMENTS FOR FIELD CONVERSION

		Miscellaneous:	
	5WS341775	Dual Gauge Wheel Kit (LR2072, LR2084, LR2172, LR2184 and LR2196)	407.00

LR2084 - 7 Ft. Standard Duty Landscape Rake
Continued

THIS PAGE IS INTENTIONALLY LEFT BLANK

LR2172 - 6 Ft. Medium Duty Landscape Rake

Equipment for Base Machine

Duty: Medium Duty
Rake Width: 72 In.
3-Point Hitch:
  Category I
Tractor HP:
  23 to 55 HP
Tines Dimension:
  5/16 In. x 1 In. Spring Steel
Tine Spacing: 36 at 1 In.
Raking Positions:
  5 Forward (0, 15, 30 Degree) Each Side
  - 3 Reverse (0, 15 Degree) Each Side
Parking Stand: Standard
Approximate Operating Weight: 282 lbs.

Approximate Shipping Weight: 368 lbs.
Assembly/Set-Up Time:
  30 Minutes (Approximate)
Gauge Wheel Assembly Kit
  (Two Wheels and Arms): Optional
6 Ft. Flip Down Grader Blade: Optional
Warranty: 1 Year

CODE	ATTACHMENT IDENTIFIER	DESCRIPTION	SUGGESTED LIST PRICE USD ($)

Select One Code From Each Required Category

BASE MACHINE

1201XF		LR2172 - 6 Ft. Medium Duty Landscape Rake	1,217.00

ATTACHMENTS FOR FIELD CONVERSION

		Miscellaneous:	
	5WS341986	6 Ft. Flip Down Blade (LR2172)	266.00
	5WS341775	Dual Gauge Wheel Kit (LR2072, LR2084, LR2172, LR2184 and LR2196)	407.00

LR2172 - 6 Ft. Medium Duty Landscape Rake
Continued

THIS PAGE IS INTENTIONALLY LEFT BLANK

LR2184 - 7 Ft. Medium Duty Landscape Rake

Equipment for Base Machine

Duty: Medium Duty
Rake Width: 84 In.
3-Point Hitch:
  Category I
Tractor HP:
  23 to 55 HP
Tine Dimension:
  5/16 In. x 1 In. Spring Steel
Tine Spacing: 42 at 1 In.
Raking Positions:
  5 Forward (0, 15, 30 Degree) Each Side
  - 3 Reverse (0, 15 Degree) Each Side
Parking Stand: Standard
Approximate Operating Weight: 307 lbs.

Approximate Shipping Weight: 393 lbs.
Assembly/Set-Up Time:
  30 Minutes (Approximate)
Gauge Wheel Assembly Kit
  (Two Wheels and Arms): Optional
7 Ft. Flip Down Grader: Optional
Warranty: 1 Year

CODE	ATTACHMENT IDENTIFIER	DESCRIPTION	SUGGESTED LIST PRICE USD ($)

Select One Code From Each Required Category

BASE MACHINE

1202XF		LR2184 - 7 Ft. Medium Duty Landscape Rake	1,308.00

ATTACHMENTS FOR FIELD CONVERSION

		Miscellaneous:	
	5WS341987	7 Ft. Flip Down Blade (LR2184)	277.00
	5WS341775	Dual Gauge Wheel Kit (LR2072, LR2084, LR2172, LR2184 and LR2196)	407.00

LR2184 - 7 Ft. Medium Duty Landscape Rake
Continued

THIS PAGE IS INTENTIONALLY LEFT BLANK

LR2196 - 8 Ft. Medium Duty Landscape Rake

Equipment for Base Machine

Duty: Medium Duty
Rake Width: 96 In.
3-Point Hitch:
  Category I
Tractor HP: 27 to 55 HP
Tines Dimension:
  5/16 In. x 1 In. Spring Steel
Tine Spacing: 48 at 1 In.
Raking Positions:
  5 Forward (0, 15, 30 Degree) Each Side
  - 3 Reverse (0, 15 Degree) Each Side
Approximate Operating Weight: 332 lbs.
Approximate Shipping Weight: 418 lbs.

Parking Stand: Standard
Assembly/Set-Up Time:
  30 Minutes (Approximate)
Gauge Wheel Assembly Kit
  (Two Wheels and Arms): Optional
8 Ft. Flip Down Grader: Optional
Warranty: 1 Year

CODE	ATTACHMENT IDENTIFIER	DESCRIPTION	SUGGESTED LIST PRICE USD ($)

Select One Code From Each Required Category

BASE MACHINE

1203XF		LR2196 - 8 Ft. Medium Duty Landscape Rake	1,398.00

ATTACHMENTS FOR FIELD CONVERSION

		Miscellaneous:	
	5WS341988	8 Ft. Flip Down Blade (LR2196)	317.00
	5WS341775	Dual Gauge Wheel Kit (LR2072, LR2084, LR2172, LR2184 and LR2196)	407.00

LR2196 - 8 Ft. Medium Duty Landscape Rake
Continued

THIS PAGE IS INTENTIONALLY LEFT BLANK

LR5060 - 5 Ft. Standard Duty Landscape Rake

Equipment for Base Machine

Duty: Standard Duty
Rake Width: 60 In.
3-Point Hitch:
Category I
Tractor HP:
15 to 35 HP
Tine Dimension:
5/16 In. x 1 In. Spring Steel
Tine Spacing: 36 at 1 In.
Raking Positions:
5 Forward (0, 15, 30 Degree) Each Side
- 5 Reverse (0, 15, 30 Degree) Each Side
Parking Stand: Standard
Approximate Operating Weight: 248 lbs.

Shipping Weight:
554 lbs. (Quantity 2)
Assembly/Set-Up Time:
15 Minutes (Approximate)
Pivot: 360 Degrees
Packaged 2 per Crate
Gauge Wheel Kit: NA
Warranty: 1 Year

CODE	ATTACHMENT IDENTIFIER	DESCRIPTION	SUGGESTED LIST PRICE USD ($)
		Select One Code From Each Required Category	
		BASE MACHINE	
1661XF		LR5060 - 5 Ft. Standard Duty Landscape Rake *Order in multiples of two.*	716.00

LR5060 - 5 Ft. Standard Duty Landscape Rake
Continued

THIS PAGE IS INTENTIONALLY LEFT BLANK

LR5072 - 6 Ft. Standard Duty Landscape Rake

Equipment for Base Machine

Duty: Standard Duty
Rake Width: 72 In.
3-Point Hitch:
Category I
Tractor HP:
20 to 38 HP
Tine Dimension:
5/16 In. x 1 In. Spring Steel
Tine Spacing: 36 at 1 In.
Raking Positions:
5 Forward (0, 15, 30 Degree) Each Side
- 5 Reverse (0, 15, 30 Degree) Each Side
Parking Stand: Standard
Approximate Operating Weight: 272 lbs.

Shipping Weight:
602 lbs. (Quantity 2)
Assembly/Set-Up Time:
15 Minutes (Approximate)
Pivot: 360 Degrees
Packaged 2 per Crate
Gauge Wheel Kit: NA
Warranty: 1 Year

CODE	ATTACHMENT IDENTIFIER	DESCRIPTION	SUGGESTED LIST PRICE USD ($)
		Select One Code From Each Required Category	
		BASE MACHINE	
1662XF		LR5072 - 6 Ft. Standard Duty Landscape Rake *Order in multiples of two.*	775.00

LR5072 - 6 Ft. Standard Duty Landscape Rake
Continued

THIS PAGE IS INTENTIONALLY LEFT BLANK

LR5084 - 7 Ft. Standard Duty Landscape Rake

Equipment for Base Machine

Duty: Standard Duty
Rake Width: 84 In.
3-Point Hitch:
Category I
Tractor HP:
20 to 50 HP
Tine Dimension:
5/16 In. x 1 In. Spring Steel
Tine Spacing: 36 at 1 In.
Raking Positions:
5 Forward (0, 15, 30 Degree) Each Side
- 5 Reverse (0, 15, 30 Degree) Each Side
Parking Stand: Standard
Approximate Operating Weight: 287 lbs.

Shipping Weight:
632 lbs. (Quantity 2)
Assembly/Set-Up Time:
15 Minutes (Approximate)
Pivot: 360 Degrees
Packaged 2 per Crate
Gauge Wheel Kit: NA
Warranty: 1 Year

CODE	ATTACHMENT IDENTIFIER	DESCRIPTION	SUGGESTED LIST PRICE USD ($)
		Select One Code From Each Required Category	
		BASE MACHINE	
1663XF		LR5084 - 7 Ft. Standard Duty Landscape Rake *Order in multiples of two.*	816.00

LR5084 - 7 Ft. Standard Duty Landscape Rake
Continued

THIS PAGE IS INTENTIONALLY LEFT BLANK

LR5096 - 8 Ft. Standard Duty Landscape Rake

Equipment for Base Machine

Duty: Standard Duty
Rake Width: 96 In.
3-Point Hitch:
Category I
Tractor HP:
20 to 50 HP
Tine Dimension:
5/16 In. x 1 In. Spring Steel
Tine Spacing: 36 at 1 In.
Raking Positions:
5 Forward (0, 15, 30 Degree) Each Side
- 5 Reverse (0, 15, 30 Degree) Each Side
Parking Stand: Standard
Approximate Operating Weight: 324 lbs.

Shipping Weight:
706 lbs. (Quantity 2)
Assembly/Set-Up Time:
15 Minutes (Approximate)
Pivot: 360 Degrees
Packaged 2 per Crate
Gauge Wheel Kit: NA
Warranty: 1 Year

CODE	ATTACHMENT IDENTIFIER	DESCRIPTION	SUGGESTED LIST PRICE USD ($)
		Select One Code From Each Required Category	
		BASE MACHINE	
1664XF		LR5096 - 8 Ft. Standard Duty Landscape Rake *Order in multiples of two.*	881.00

LR5096 - 8 Ft. Standard Duty Landscape Rake
Continued

THIS PAGE IS INTENTIONALLY LEFT BLANK

LR5048L - 4 Ft. Limited Category 1 Economy Duty Landscape Rake

Equipment for Base Machine

```
Duty:  Economy Duty
Rake Width:  48 In.
3-Point Hitch:
  Limited Category I
Tractor HP:  18 PTO HP Max
Tine Dimension:
  5/16 In. x 1 In. Spring Steel
Tine Spacing:  24 at 1 In.
Raking Positions:
  5 Forward (0, 15, 30 Degree) Each Side
  - 5 Reverse (0, 15, 30 Degree) Each Side
Parking Stand:  Standard
Approximate Operating Weight:  186 lbs.
Shipping Weight:
  430 lbs. (Quantity 2)
Assembly/Set-Up Time:
  15 Minutes (Approximate) - Per Pair
Pivot:  360 Degrees
Packaged 2 per Crate
Gauge Wheel Kit:  Yes
Warranty: 1 Year
```

CODE	ATTACHMENT IDENTIFIER	DESCRIPTION	SUGGESTED LIST PRICE USD ($)
		Select One Code From Each Required Category	
		BASE MACHINE	
1761XF		LR5048L - 4 Ft. Limited Category 1 Economy Duty Landscape Rake *Order in multiples of two.*	605.00
		ATTACHMENTS - ORDER AS DESIRED	
9000		LR50L Gauge Wheel Kit *Includes two solid wheels, two mounting brackets, and hardware.*	230.00
		ATTACHMENTS FOR FIELD CONVERSION	
		Miscellaneous:	
	5TITE511225	LR50L Gauge Wheel Kit *Includes two solid wheels, two mounting brackets, and hardware.*	248.59

LR5048L - 4 Ft. Limited Category 1 Economy Duty Landscape Rake
Continued

THIS PAGE IS INTENTIONALLY LEFT BLANK

LR5060L - 5 Ft. Limited Category 1 Economy Duty Landscape Rake

Equipment for Base Machine

Duty: Economy Duty
Rake Width: 60 In.
3-Point Hitch:
Limited Category I
Tractor HP: 18 PTO HP Max
Tine Dimension:
5/16 In. x 1 In. Spring Steel
Tine Spacing: 30 at 1 In.
Raking Positions:
5 Forward (0, 15, 30 Degree) Each Side
- 5 Reverse (0, 15, 30 Degree) Each Side
Parking Stand: Standard
Approximate Operating Weight: 205 lbs.
Shipping Weight:
468 lbs. (Quantity 2)
Assembly/Set-Up Time:
15 Minutes (Approximate) - Per Pair
Pivot: 360 Degrees
Packaged 2 per Crate
Gauge Wheel Kit: Yes
Warranty: 1 Year

CODE	ATTACHMENT IDENTIFIER	DESCRIPTION	SUGGESTED LIST PRICE USD ($)
		Select One Code From Each Required Category	
		BASE MACHINE	
1762XF		LR5060L - 5 Ft. Limited Category 1 Economy Duty Landscape Rake *Order in multiples of two.*	696.00
		ATTACHMENTS - ORDER AS DESIRED	
9000		LR50L Gauge Wheel Kit *Includes two solid wheels, two mounting brackets, and hardware.*	230.00
		ATTACHMENTS FOR FIELD CONVERSION	
		Miscellaneous:	
	5TITE511225	LR50L Gauge Wheel Kit *Includes two solid wheels, two mounting brackets, and hardware.*	248.59

LR5060L - 5 Ft. Limited Category 1 Economy Duty Landscape Rake
Continued

THIS PAGE IS INTENTIONALLY LEFT BLANK

PM1001 Integral Middle Buster

Equipment for Base Machine

```
Hitch:
  Lift-type, Category I,
  iMatch Compatible
Working Depth:
  Up to 12 In. (304.8 mm)
Transport Length:
  15 In. (381 mm)
Transport Width:
  32 In. ( 812.8 mm)
Transport Height:
  32 In. (812.8 mm)
```

```
Tractor Engine HP Range:
  25 - 45 HP
Blade:
  Double-Wing Cutting Blade,
  19 In. (482.6 mm) x 11 In. (279.4 mm)
```

CODE	ATTACHMENT IDENTIFIER	DESCRIPTION	SUGGESTED LIST PRICE USD ($)

Select One Code From Each Required Category

BASE MACHINE

3461XF		PM1001 Integral Middle Buster *Order in multiples of two.*	246.00

ATTACHMENTS FOR FIELD CONVERSION

		Miscellaneous:	
	5TITE511154	French Kit - Includes Operator's Manual, Parts Catalog and Safety Decals *PM1001*	13.21

PM1001 Integral Middle Buster
Continued

THIS PAGE IS INTENTIONALLY LEFT BLANK

MF2204 - 42 in. Wide 3-Point Category I Hitch Mulch Finisher

Equipment for Base Machine

Machine Weight: 753 lbs.
Tractor HP Range: 30-50 HP
Working Width: 42 In.
Unit Length: 53 In.
Unit Height: 35 In.
Number of Blades: 6
Blade Diameter: 16 In.
Blade Thickness: 3 mm
Blade Spacing: 8.25 In.
Blade Type: Notched
Bearing Hanger:
.375 In. Formed Plate with Reinforcement,
2 Each .625 U-bolts per Hanger
Bearing Type: 1 In. Square Sealed Bearing
Gang Axle: 1 In. Square
Gang Adjustment: Pinned Adjustment

3-Point Hitch Type: Category I
iMatch Compatible: Yes
Number of S-Tines: 5
1.75 In. Reversible Chisel Point: 5 (Standard)
9 In. Sweep: 5 (Optional - Order Through Parts)
Right Turning Point: 4 (Optional - Order Through Parts)
Left Turning Point: 4 (Optional - Order Through Parts)
Approximate Set-Up Time: 1 Man Hour

CODE	ATTACHMENT IDENTIFIER	DESCRIPTION	SUGGESTED LIST PRICE USD ($)

Select One Code From Each Required Category

BASE MACHINE

3521XF		MF2204 - 42 in. Wide 3-Point Category I Hitch Mulch Finisher *Includes two S-tine toolbars.*	2,326.00

ATTACHMENTS FOR FIELD CONVERSION

		Miscellaneous:	
	5PM50062698	French Kit - Includes Operator's Manual and Safety Decals (MF22 Series)	See Parts
	5PM50062291	Rolling Basket Attachment	1,851.03

MF2204 - 42 in. Wide 3-Point Category I Hitch Mulch Finisher
Continued

THIS PAGE IS INTENTIONALLY LEFT BLANK

MF2206 - 60 in. Wide 3-Point Category I/II Hitch Mulch Finisher

Equipment for Base Machine

Machine Weight: 1066 lbs.
Tractor HP Range: 45-75 HP
Working Width: 60 In.
Unit Length: 74 In.
Unit Height: 35 In.
Number of Blades: 8
Blade Diameter: 18 In.
Blade Thickness: 3.5 mm
Blade Spacing: 7.50 In.
Blade Type: Notched
Bearing Hanger:
.375 Formed Plate with Reinforcement,
2 Each .625 U-bolts per hanger
Bearing Type: 1 In. Square Sealed Bearing
Gang Axle: 1 In. Square
Gang Adjustment: Pinned Adjustment

3-Point Hitch Type: Category I/II
iMatch Compatible: Yes
Number of S-Tines: 7
1.75 In. Reversible Chisel Point: 7 (Standard)
9 In. Sweep: 7 (Optional - Order Through Parts)
Right Turning Point: 3 (Optional - Order Through Parts)
Left Turning Point: 3 (Optional - Order Through Parts)
Approximate Set-Up Time: 1 Man Hour

CODE	ATTACHMENT IDENTIFIER	DESCRIPTION	SUGGESTED LIST PRICE USD ($)

Select One Code From Each Required Category

BASE MACHINE

3523XF		MF2206 - 60 in. Wide 3-Point Category I/II Hitch Mulch Finisher *Includes two S-tine toolbars.*	3,876.00

ATTACHMENTS FOR FIELD CONVERSION

		Miscellaneous:	
	5PM50062698	French Kit - Includes Operator's Manual and Safety Decals (MF22 Series)	See Parts
	5PM50062292	Rolling Basket Attachment	2,008.28

THIS PAGE IS INTENTIONALLY LEFT BLANK

MF2208 - 82 in. Wide 3-Point Category I/II Hitch Mulch Finisher

Equipment for Base Machine

Machine Weight: 1242 lbs.
Tractor HP Range: 60-100 HP
Working Width: 82 In.
Unit Length: 74 In.
Unit Height: 35 In.
Number of Blades: 12
Blade Diameter: 18 In.
Blade Thickness: 3.5 mm
Blade Spacing: 7.50 In.
Blade Type: Notched
Bearing Hanger:
.375 In. Formed Plate with Reinforcement,
2 Each .625 U-bolts per Hanger
Bearing Type: 1 In. Square Sealed Bearing
Gang Axle: 1 In. Square
Gang Adjustment: Pinned Adjustment

3-Point Hitch Type: Category I/II
iMatch Compatible: Yes
Number of S-Tines: 9
1.75 In. Reversible Chisel Point: 9 (Standard)
9 In. Sweep: 9 (Optional - Order Through Parts)
Right Turning Point: 4 (Optional - Order Through Parts)
Left Turning Point: 4 (Optional - Order Through Parts)
Approximate Set-Up Time: 1 Man Hour

CODE	ATTACHMENT IDENTIFIER	DESCRIPTION	SUGGESTED LIST PRICE USD ($)

Select One Code From Each Required Category

BASE MACHINE

3524XF		MF2208 - 82 in. Wide 3-Point Category I/II Hitch Mulch Finisher *Includes two S-tine toolbars.*	4,430.00

ATTACHMENTS FOR FIELD CONVERSION

		Miscellaneous:	
	5PM50062698	French Kit - Includes Operator's Manual and Safety Decals (MF22 Series)	See Parts
	5PM50062293	Rolling Basket Attachment	2,237.41

MF2208 - 82 in. Wide 3-Point Category I/II Hitch Mulch Finisher
Continued

THIS PAGE IS INTENTIONALLY LEFT BLANK

PHA006 Post Hole Auger 6 In. for PHD100

Equipment for Base Machine

```
Diameter: 6 In.
Length: 36 In.
Weight: 24 lbs.
Flighting Type: Single
Flighting Thickness: 3/16 In.
Compatible With Digger Model Number(s): PHD100
```

CODE	ATTACHMENT IDENTIFIER	DESCRIPTION	SUGGESTED LIST PRICE USD ($)
		Select One Code From Each Required Category	
		BASE MACHINE	
1211XF		PHA006 Post Hole Auger 6 In. for PHD100	293.00

PHA006 Post Hole Auger 6 In. for PHD100
Continued

THIS PAGE IS INTENTIONALLY LEFT BLANK

PHA009 Post Hole Auger 9 In. for PHD100

Equipment for Base Machine

```
Diameter: 9 In.
Length: 36 In.
Weight: 42 lbs.
Flighting Type: Double
Flighting Thickness: 3/16 In.
Compatible With Digger Model Number(s): PHD100
```

CODE	ATTACHMENT IDENTIFIER	DESCRIPTION	SUGGESTED LIST PRICE USD ($)

Select One Code From Each Required Category

BASE MACHINE

1212XF	PHA009 Post Hole Auger 9 In. for PHD100	308.00

PHA009 Post Hole Auger 9 In. for PHD100
Continued

THIS PAGE IS INTENTIONALLY LEFT BLANK

PHA012 Post Hole Auger 12 In. for PHD100

Equipment for Base Machine

```
Diameter: 12 In.
Length: 36 In.
Weight: 52 lbs.
Flighting Type: Double
Flighting Thickness: 3/16 In.
Compatible With Digger Model Number(s): PHD100
```

CODE	ATTACHMENT IDENTIFIER	DESCRIPTION	SUGGESTED LIST PRICE USD ($)

Select One Code From Each Required Category

BASE MACHINE

1213XF	PHA012 Post Hole Auger 12 In. for PHD100	391.00

PHA012 Post Hole Auger 12 In. for PHD100
Continued

THIS PAGE IS INTENTIONALLY LEFT BLANK

PHA106 Post Hole Auger 6 In. for PHD200/300/400

Equipment for Base Machine

```
Diameter: 6 In.
Length: 48 In.
Weight: 32 lbs.
Flighting Type: Single
Flighting Thickness: 3/16 In.
Compatible With Digger Model Number(s):
  PHD200, PHD300, PHD400
```

CODE	ATTACHMENT IDENTIFIER	DESCRIPTION	SUGGESTED LIST PRICE USD ($)

Select One Code From Each Required Category

BASE MACHINE

1214XF	PHA106 Post Hole Auger 6 In. for PHD200/300/400	296.00

PHA106 Post Hole Auger 6 In. for PHD200/300/400
Continued

THIS PAGE IS INTENTIONALLY LEFT BLANK

PHA109 Post Hole Auger 9 In. for PHD200/300/400

Equipment for Base Machine

```
Diameter: 9 In.
Length: 48 In.
Weight: 55 lbs.
Flighting Type: Double
Flighting Thickness: 3/16 In.
Compatible With Digger Model Number(s):
  PHD200, PHD300, PHD400
```

CODE	ATTACHMENT IDENTIFIER	DESCRIPTION	SUGGESTED LIST PRICE USD ($)
		Select One Code From Each Required Category	
		BASE MACHINE	
1215XF		PHA109 Post Hole Auger 9 In. for PHD200/300/400	309.00

PHA109 Post Hole Auger 9 In. for PHD200/300/400
Continued

THIS PAGE IS INTENTIONALLY LEFT BLANK

PHA112 Post Hole Auger 12 In. for PHD200/300/400

Equipment for Base Machine

```
Diameter: 12 In.
Length: 48 In.
Weight: 55 lbs.
Flighting Type: Double
Flighting Thickness: 3/16 In.
Compatible With Digger Model Number(s):
  PHD200, PHD300, PHD400
```

CODE	ATTACHMENT IDENTIFIER	DESCRIPTION	SUGGESTED LIST PRICE USD ($)
		Select One Code From Each Required Category	
		BASE MACHINE	
1216XF		PHA112 Post Hole Auger 12 In. for PHD200/300/400	376.00

PHA112 Post Hole Auger 12 In. for PHD200/300/400
Continued

THIS PAGE IS INTENTIONALLY LEFT BLANK

PHA118 Post Hole Auger 18 In. for PHD300/400

Equipment for Base Machine

```
Diameter: 18 In.
Length: 48 In.
Weight: 80 lbs.
Flighting Type: Double
Flighting Thickness: 1/4 In.
Compatible With Digger Model Number(s):
  PHD300, PHD400
```

CODE	ATTACHMENT IDENTIFIER	DESCRIPTION	SUGGESTED LIST PRICE USD ($)
		Select One Code From Each Required Category	
		BASE MACHINE	
1217XF		PHA118 Post Hole Auger 18 In. for PHD300/400	510.00

PHA118 Post Hole Auger 18 In. for PHD300/400
Continued

THIS PAGE IS INTENTIONALLY LEFT BLANK

PHA124 Post Hole Auger 24 In. for PHD300/400

Equipment for Base Machine

```
Diameter: 24 In.
Length: 48 In.
Weight: 105 lbs.
Flighting Type: Double
Flighting Thickness: 1/4 In.
Compatible With Digger Model Number(s):
  PHD300, PHD400
```

CODE	ATTACHMENT IDENTIFIER	DESCRIPTION	SUGGESTED LIST PRICE USD ($)

Select One Code From Each Required Category

BASE MACHINE

1218XF	PHA124 Post Hole Auger 24 In. for PHD300/400	687.00

PHA124 Post Hole Auger 24 In. for PHD300/400
Continued

THIS PAGE IS INTENTIONALLY LEFT BLANK

PHA130 Post Hole Auger 30 In. for PHD300/400

Equipment for Base Machine

Diameter: 30 In.
Length: 44 In.
Weight: 213 lbs.
Flighting Type:
  Double (15 In. and 30 In.)
Flighting Thickness: 5/16 In.
Compatible With Digger Model Number(s):

PHD300, PHD400

CODE	ATTACHMENT IDENTIFIER	DESCRIPTION	SUGGESTED LIST PRICE USD ($)
		Select One Code From Each Required Category	
		BASE MACHINE	
1219XF		PHA130 Post Hole Auger 30 In. for PHD300/400 *Tapered flighting for planting trees.*	1,469.00

PHA130 Post Hole Auger 30 In. for PHD300/400
Continued

THIS PAGE IS INTENTIONALLY LEFT BLANK

PHD100 Post Hole Digger Up to 25HP Category I Hitch

Equipment for Base Machine

Boom OD: 2-7/8 In.
Yoke OD: 2-3/8 In.
Auger Speed: 180 RPM
Gearbox Gear Ratio: 3:1
Gearbox HP Rating: 25 HP
PTO HP Range: 18-25 HP
3-Point Hitch Category: Category I
Works with Auger Model Numbers:
PHA006, PHA009, PHA012

Weight: 112 lbs.
Shipping Weight (2 per Crate): 330 lbs.
Set-Up Time: 20 Minutes

CODE	ATTACHMENT IDENTIFIER	DESCRIPTION	SUGGESTED LIST PRICE USD ($)
		Select One Code From Each Required Category	
		BASE MACHINE	
1221XF		PHD100 Post Hole Digger Up to 25HP Category I Hitch *Order in multiples of two.*	987.00
		ATTACHMENTS ORDER AS DESIRED	
9000		Hook-Up Stand *For customer use.*	446.00
		ATTACHMENTS FOR FIELD CONVERSION	
		Miscellaneous:	
	5BP950960B	French OM & Decal Kit Post Hole Diggers *Destination of Quebec only. Includes French safety decals and manul.*	0.00
	5BP480099851	Post Hole Digger Hookup Stand *For customer use.*	446.00

PHD100 Post Hole Digger Up to 25HP Category I Hitch
Continued

THIS PAGE IS INTENTIONALLY LEFT BLANK

PHD200 Post Hole Digger Up to 40HP Category I Hitch

Equipment for Base Machine

Boom OD: 3-1/2 In.
Yoke OD: 2-7/8 In.
Auger Speed: 180 RPM
Gearbox Gear Ratio: 3:1
Gearbox HP Rating: 40 HP
PTO HP Range: 18-40 HP
3-Point Hitch Category: Category I
Works with Auger Model Numbers:
PHA106, PHA109, PHA112

Weight: 200 lbs.
Shipping Weight (2 per Crate): 470 lbs.
Set-Up Time: 20 Minutes

CODE	ATTACHMENT IDENTIFIER	DESCRIPTION	SUGGESTED LIST PRICE USD ($)
		Select One Code From Each Required Category	
		BASE MACHINE	
1222XF		PHD200 Post Hole Digger Up to 40HP Category I Hitch *Order in multiples of two.*	1,063.00
		ATTACHMENTS ORDER AS DESIRED	
9000		Hook-Up Stand *For customer use.*	446.00
9010		Post Hole Digger Down Force Kit for PHD200	600.00
		ATTACHMENTS FOR FIELD CONVERSION	
		Miscellaneous:	
	5BP950960B	French OM & Decal Kit Post Hole Diggers *Destination of Quebec only. Includes French safety decals and manul.*	0.00
	5BP48PHD005	Post Hole Digger Down Force Kit PHD200	600.00
	5BP480099851	Post Hole Digger Hookup Stand *For customer use.*	446.00

PHD200 Post Hole Digger Up to 40HP Category I Hitch
Continued

THIS PAGE IS INTENTIONALLY LEFT BLANK

PHD300 Post Hole Digger Up to 50HP Category I & II Hitch

Equipment for Base Machine

Boom OD: 3-1/2 In. Reinforced
Yoke OD: 2-7/8 In. Reinforced
Auger Speed: 154 RPM
Gearbox Gear Ratio: 3.5:1
Gearbox HP Rating: 50 HP
PTO HP Range: 18-50 HP
3-Point Hitch Category: Category I or II
Works with Auger Model Numbers:
PHA106, PHA109, PHA112,
PHA118, PHA124, PHA132

Weight: 230 lbs.
Shipping Weight (2 per Crate): 550 lbs.
Set-Up Time: 20 Minutes

CODE	ATTACHMENT IDENTIFIER	DESCRIPTION	SUGGESTED LIST PRICE USD ($)
		Select One Code From Each Required Category	
		BASE MACHINE	
1223XF		PHD300 Post Hole Digger Up to 50HP Category I & II Hitch *Order in multiples of two.*	1,305.00
		ATTACHMENTS ORDER AS DESIRED	
9000		Hook-Up Stand *For customer use.*	446.00
9010		Post Hole Digger Down Force Kit for PHD300 and PHD400	620.00
9020		Post Hole Digger Auger Positioning Handle	160.00
		ATTACHMENTS FOR FIELD CONVERSION	
		Miscellaneous:	
	5BP950960B	French OM & Decal Kit Post Hole Diggers *Destination of Quebec only. Includes French safety decals and manul.*	0.00
	5BP48PHD003	Post Hole Digger Auger Positioning Handle	160.00
	5BP48PHD002	Post Hole Digger Down Force Kit	620.00
	5BP480099851	Post Hole Digger Hookup Stand *For customer use.*	446.00

PHD300 Post Hole Digger Up to 50HP Category I & II Hitch
Continued

THIS PAGE IS INTENTIONALLY LEFT BLANK

PHD400 Post Hole Digger Up to 90HP Category I & II Hitch

Equipment for Base Machine

Boom OD: 3-1/2 In. Reinforced
Yoke OD: 2-7/8 In. Reinforced
Auger Speed: 135 RPM
Gearbox Gear Ratio: 4:1
Gearbox HP Rating: 90 HP
PTO HP Range: 40-90 HP
3-Point Hitch Category: Category I or II
Works with Auger Model Numbers:
PHA106, PHA109, PHA112,
PHA118, PHA124, PHA132

Weight: 260 lbs.
Shipping Weight (2 per Crate): 610 lbs.
Set-Up Time: 20 Minutes

CODE	ATTACHMENT IDENTIFIER	DESCRIPTION	SUGGESTED LIST PRICE USD ($)
		Select One Code From Each Required Category	
		BASE MACHINE	
1224XF		PHD400 Post Hole Digger Up to 90HP Category I & II Hitch *Order in multiples of two.*	1,582.00
		ATTACHMENTS ORDER AS DESIRED	
9000		Hook-Up Stand *For customer use.*	446.00
9010		Post Hole Digger Down Force Kit for PHD300 and PHD400	620.00
9020		Post Hole Digger Auger Positioning Handle	160.00
		ATTACHMENTS FOR FIELD CONVERSION	
		Miscellaneous:	
	5BP950960B	French OM & Decal Kit Post Hole Diggers *Destination of Quebec only. Includes French safety decals and manul.*	0.00
	5BP48PHD003	Post Hole Digger Auger Positioning Handle	160.00
	5BP48PHD002	Post Hole Digger Down Force Kit	620.00
	5BP480099851	Post Hole Digger Hookup Stand *For customer use.*	446.00

PHD400 Post Hole Digger Up to 90HP Category I & II Hitch
Continued

THIS PAGE IS INTENTIONALLY LEFT BLANK

PR1148 - 48 In. Power Rake

Equipment for Base Machine

Function: Landscaping and
  Site Development
Hitch Compatibility:
  Category I and iMatch Compatible
Rotor: Cylindrical with
  Welded Carbide Teeth
Carbide Teeth per Rotor: 76
Depth Control: Dual Independently
  Adjustable Gauge Wheels
Gauge Wheel Description: 13 x 5.00-6
Gauge Wheel Height Adjustment:
  Manual Split Clamp
Angle Adjustment: Hydraulic
Hydraulic Cylinder Manufacturer:
  Best Metal Ind.
Hydraulic Cylinder Description: 1.50 In.
  Bore 0.75 In. Rod 6.00 In. Stroke
Working Angles R or L: 0-15 Degrees
Height: 34 In.
Transport Width: 54 In.
Working Width: 48 In.
Working Width at Maximum Angle: 46 In.
Roll-Back Barrier Range:
  5/16 In. to 3-3/16 In.
Length: 54 In.
Side Drive: Chain ASA 50-2
Chain Case Lube:
  Cenex 365 #00 Fluid grease
Tubing Size: 3 In. x 3 In.
Tubing Wall Thickness: 3/16 In.
Tractor PTO Speed (RPM): 540
Driveline Manufacturer: Weasler
Primary Driveline Description:
  14R with Cut-out Clutch
Secondary Driveline Description:
  1-3/8 In. - 6 Splines Direct to Chain Case
Clutch/Torque Setting (Number): 316
Tractor PTO HP Requirements
  Minimum-Maximum: 15-22 HP
Tractor Hydraulic Requirements: 1500 PSI
Gearbox Manufacturer: Weasler
Gearbox Description:
  Straight Bevel Gear in Oil Bath
Gearbox Oil Recommendation: 85-90W
Gearbox Reduction: 2:1
Rotor Speed (RPM): 285
Rotor Direction of Rotation: Against DOT
Approximate Operating Weight: 500 lbs.
Approximate Shipping Weight: 700 lbs.
Parking Stand: Standard
Approximate Set-Up Time: 20 Minutes
Warranty: 1 Year

CODE	ATTACHMENT IDENTIFIER	DESCRIPTION	SUGGESTED LIST PRICE USD ($)

Select One Code From Each Required Category

BASE MACHINE

1231XF	PR1148 - 48 In. Power Rake	8,716.00

PR1148 - 48 In. Power Rake
Continued

THIS PAGE IS INTENTIONALLY LEFT BLANK

PR1160 - 60 In. Power Rake

Equipment for Base Machine

Function: Landscaping and Site Development
Hitch Compatibility: Category I and iMatch Compatible
Rotor: Cylindrical with Welded Carbide Teeth
Carbide Teeth per Rotor: 88
Depth Control: Dual Independently Adjustable Gauge Wheels
Gauge Wheel Description: 13 X 5.00-6
Gauge Wheel Height Adjustment: Manual Split Clamp
Angle Adjustment: Hydraulic
Hydraulic Cylinder Manufacturer: Best Metal Ind.
Hydraulic Cylinder Description: 1.50 In. Bore 0.75 In. Rod 6.00 In. Stroke
Working Angles R or L: 0-15 Degrees
Height: 36 In.
Transport Width: 64 In.
Working Width: 56 In.
Working Width at Maximum Angle: 54 In.
Roll-Back Barrier Range: 5/16 In. to 3-3/16 In.
Length: 55 In.
Side Drive: Chain ASA 50-2
Chain Case Lube: Cenex 365 #00 Fluid Grease
Tubing Size: 3 In. x 3 In.
Tubing Wall Thickness: 3/16 In.
Tractor PTO Speed (RPM): 540
Driveline Manufacturer: Weasler
Primary Driveline Description: 14R
Secondary Driveline Description: 1-3/8 In. 6 Splines to Chain Case with Friction Clutch
Clutch/Torque Setting (Number): 508
Tractor PTO HP Requirements Minimum-Maximum: 18-35 HP
Tractor Hydraulic Requirements: 1500 PSI
Gearbox Manufacturer: Superior
Gearbox Description: Straight Bevel Gear in Oil Bath
Gearbox Oil Recommendation: 85-90W
Gearbox Reduction: 2:1
Rotor Speed (RPM): 285
Rotor Direction of Rotation: Against DOT
Approximate Operating Weight: 550 lbs.
Approximate Shipping Weight: 750 lbs.
Parking Stand: Standard
Approximate Set-Up Time: 20 Minutes
Warranty: 1 Year

CODE	ATTACHMENT IDENTIFIER	DESCRIPTION	SUGGESTED LIST PRICE USD ($)
		Select One Code From Each Required Category	
		BASE MACHINE	
1232XF		PR1160 - 60 In. Power Rake	9,268.00
		ATTACHMENTS - ORDER AS DESIRED	
9000		Grass Seed Attachment for PR1160	6,119.00
		ATTACHMENTS FOR FIELD CONVERSION	
		Miscellaneous:	
	5SPPS50814	Grass Seed Attachment for PR1160	6,608.52

PR1160 - 60 In. Power Rake
Continued

THIS PAGE IS INTENTIONALLY LEFT BLANK

PR1172 - 72 In. Power Rake

Equipment for Base Machine

Function: Landscaping and
  Site Development
Hitch Compatibility:
  Category I and iMatch Compatible
Rotor: Cylindrical with
  Welded Carbide Teeth
Carbide Teeth per Rotor: 114
Depth Control: Dual Independently
  Adjustable Gauge Wheels
Gauge Wheel Description: 16.5 x 6.5-8
Gauge Wheel Height Adjustment:
  Manual Split Clamp
Angle Adjustment: Hydraulic
Hydraulic Cylinder Manufacturer:
  Best Metal Ind.
Hydraulic Cylinder Description: 1.50 In.
  Bore 0.75 In. Rod 8.00 In. Stroke
Working Angles R or L: 0-15 Degrees
Height: 40 In.
Transport Width: 81 In.
Working Width: 72 In.
Working Width at Maximum Angle: 69.5 In.
Roll-Back Barrier Range:
  5/16 In. to 2-15/16 In.
Length: 62 In.
Side Drive: Chain ASA 60-2
Chain Case Lube:
  Cenex 365 #00 Fluid Grease
Tubing Size: 3 In. x 3 In.
Tubing Wall Thickness: 1/4 In.
Tractor PTO Speed (RPM): 540
Driveline Manufacturer: Weasler
Primary Driveline Description: 14R
Secondary Driveline Description:
  35R with Friction Clutch
Clutch/Torque Setting (Number): 1016
Tractor PTO HP Requirements
  Minimum-Maximum: 30-40 HP
Tractor Hydraulic Requirements: 1500 PSI
Gearbox Manufacturer: Superior
Gearbox Description:
  Straight Bevel Gear in Oil Bath
Gearbox Oil Recommendation: 85-90W
Gearbox Reduction: 2:1
Rotor Speed (RPM): 270
Rotor Direction of Rotation: Against DOT
Approximate Operating Weight: 830 lbs.
Approximate Shipping Weight: 1100 lbs.
Parking Stand: Standard
Approximate Set-Up Time:
  45 Minutes
Warranty: 1 Year

CODE	ATTACHMENT IDENTIFIER	DESCRIPTION	SUGGESTED LIST PRICE USD ($)
		Select One Code From Each Required Category	
		BASE MACHINE	
1233XF		PR1172 - 72 In. Power Rake	10,311.00
		ATTACHMENTS - ORDER AS DESIRED	
9000		Grass Seed Attachment for PR1172	6,320.00
		ATTACHMENTS FOR FIELD CONVERSION	
		Miscellaneous:	
	5SPPS60814	Grass Seed Attachment for PR1172	6,825.60

PR1172 - 72 In. Power Rake
Continued

THIS PAGE IS INTENTIONALLY LEFT BLANK

PR1184 - 84 In. Power Rake

Equipment for Base Machine

Function: Landscaping and
  Site Development
Hitch Compatibility:
  Category I, Category II,
  iMatch, Quick Coupler Compatible
Rotor: Cylindrical with
  Welded Carbide Teeth
Carbide Teeth per Rotor: 132
Depth Control: Dual Independently
  Adjustable Gauge Wheels
Gauge Wheel Description: 16.5 x 6.5-8
Gauge Wheel Height Adjustment:
  Manual Split Clamp
Angle Adjustment: Hydraulic
Hydraulic Cylinder Manufacturer:
  Best Metal Ind.
Hydraulic Cylinder Description: 2.00 In.
  Bore 1.25 In. rod 8.00 In. Stroke
Working Angles R or L: 0-15 Degrees
Height: 44 In.
Transport Width: 93 In.
Working Width: 84 In.
Working Width at Maximum Angle: 81 In.
Roll-Back Barrier Range:
  5/16 In. to 4-11/16 In.
Length: 70 In.
Side Drive: Chain ASA 60-2H
Chain Case Lube:
  Cenex 365 #00 Fluid Grease
Tubing Size: 4 In. x 4 In.
Tubing Wall Thickness: 5/16 In.
Tractor PTO Speed (RPM): 540
Driveline Manufacturer: Weasler
Primary Driveline Description: 35E
Secondary Driveline Description: 44E with
  Friction Clutch (1-3/4 In. 20 Splines)
Clutch/Torque Setting (Number): 1695
Tractor PTO HP Requirements
  Minimum-Maximum: 42-80 HP
Tractor Hydraulic Requirements: 1500 PSI
Gearbox Manufacturer: Superior
Gearbox Description:
  Straight Bevel Gear in Oil Bath
Gearbox Oil Recommendation: 85-90W
Gearbox Reduction: 2:1
Rotor Speed (RPM): 270
Rotor Direction of Rotation: Against DOT
Approximate Operating Weight: 1260 lbs.
Approximate Shipping Weight: 1700 lbs.
Parking Stand: Standard
Approximate Set-Up Time:
  60 Minutes
Warranty: 1 Year

CODE	ATTACHMENT IDENTIFIER	DESCRIPTION	SUGGESTED LIST PRICE USD ($)

Select One Code From Each Required Category

BASE MACHINE

1234XF	PR1184 - 84 In. Power Rake	13,292.00

PR1184 - 84 In. Power Rake
Continued

THIS PAGE IS INTENTIONALLY LEFT BLANK

RB2060 - 5 Ft. Standard Duty Rear Blade

Equipment for Base Machine

3-Point Hitch: Category I
Working Width: 60 In.
Operational Weight: 249 lbs.
Tractor HP: 19 to 45 HP
Tilt Positions: Three
Offset: 12 In. Left or Right
Shipping Weight:
  588 lbs. for Quantity 2
Pivot: 360 Degrees
Parking Stand: Standard
Packaged 2 Per Crate
Moldboard Height: 14 In.
Moldboard Length: 60 In.
Moldboard Thickness: 3/16 In.
Duty: Standard Duty

Cutting Edge:
  1/2 In. x 6 In. Reversible
Assembly/Set-Up Time: 15 Minutes
Angle - Forward:
  0, 15 and 30 Degrees Each Side
Angle - Reverse:
  0 and 15 Degrees Each Side
Skid Shoes: Optional

CODE	ATTACHMENT IDENTIFIER	DESCRIPTION	SUGGESTED LIST PRICE USD ($)

Select One Code From Each Required Category

BASE MACHINE

1281XF		RB2060 - 5 Ft. Standard Duty Rear Blade *Order in multiples of two.*	717.00

ATTACHMENTS FOR FIELD CONVERSION

		Miscellaneous:	
	5WS346765	End Plate Kit (RB2060, RB2072 and RB2084)	133.00
	5WS101376	French Operator's Manual and Decal Kit (RB20 and RB20L Series)	26.45
	5WS346745	Skid Shoes Kit (RB2060, RB2072 and RB2084)	204.00

RB2060 - 5 Ft. Standard Duty Rear Blade
Continued

THIS PAGE IS INTENTIONALLY LEFT BLANK

RB2060L - 5 Ft. Rear Blade - Limited Category I

Equipment for Base Machine

Cutting Edge:
  1/2 In. x 6 In. Reversible
Angle Pivot: 360 Degrees
Angle - Forward:
  0, 15 and 30 Degrees Each Side
Angle - Reverse:
  0, 15 and 30 Degrees Each Side
Moldboard Thickness: 7 Gauge
Moldboard Length: 60 In.
Moldboard Height: 11 In.
Tractor HP (Maximum): 25 HP
3-Point Hitch:
  Limited Category I (Aftermarket
  Category 0 Lift Pins Available)

Parking Stand - Standard
Skid Shoe Bundle: Optional
Operating Weight: 155 lbs.
Shipping Weight:
  402 lbs. (Quantity of 2)
Packaged Two Per Crate
Assembly/Set-Up Time: 30 Minutes
Warranty: 1 Year

CODE	ATTACHMENT IDENTIFIER	DESCRIPTION	SUGGESTED LIST PRICE USD ($)

Select One Code From Each Required Category

BASE MACHINE

1291XF		RB2060L - 5 Ft. Rear Blade - Limited Category I *Order in multiples of two.*	515.00

ATTACHMENTS FOR FIELD CONVERSION

		Miscellaneous:	
	5WS101376	French Operator's Manual and Decal Kit (RB20 and RB20L Series)	26.45
	5WS343435	Skid Shoes Kit (RB2060L)	50.40

RB2060L - 5 Ft. Rear Blade - Limited Category I
Continued

THIS PAGE IS INTENTIONALLY LEFT BLANK

RB2072 - 6 Ft. Standard Duty Rear Blade

Equipment for Base Machine

3-Point Hitch: Category I
Shipping Weight:
660 lbs. (Quantity 2)
Moldboard Height: 14 In.
Moldboard Length: 72 In.
Moldboard Thickness: 1/4 In.
Duty: Standard Duty
Cutting Edge:
1/2 In. x 6 In. Reversible
Angle: 360 Degrees
Angle - Reverse:
0 and 15 Degrees Each Side
Approximate Operating Weight: 285 lb.
Offset: 12 In. Left or Right

Tractor HP: 23 to 55 HP
Tilt: 3-Positions
Angle - Forward:
0, 15, and 30 Degrees Each Side
Skid Shoe Bundle: Optional
End Plate Bundle: Optional
Assembly/Set-Up Time:
15 Minutes (Approximate)

CODE	ATTACHMENT IDENTIFIER	DESCRIPTION	SUGGESTED LIST PRICE USD ($)

Select One Code From Each Required Category

BASE MACHINE

1282XF		RB2072 - 6 Ft. Standard Duty Rear Blade *Order in multiples of two.*	797.00

ATTACHMENTS FOR FIELD CONVERSION

		Miscellaneous:	
	5WS346765	End Plate Kit (RB2060, RB2072 and RB2084)	133.00
	5WS101376	French Operator's Manual and Decal Kit (RB20 and RB20L Series)	26.45
	5WS346745	Skid Shoes Kit (RB2060, RB2072 and RB2084)	204.00

RB2072 - 6 Ft. Standard Duty Rear Blade
Continued

THIS PAGE IS INTENTIONALLY LEFT BLANK

RB2084 - 7 Ft. Standard Duty Rear Blade

Equipment for Base Machine

3-Point Hitch: Category I
Tractor HP: 27 to 55 HP
Tilt: 3 Position
Shipping Weight:
  700 lbs. (Quantity 2)
Offset:
  12 Inches, Left or Right
Moldboard Thickness: 1/4 In.
Moldboard Length: 84 In.
Moldboard Height: 14 In.
Duty: Standard Duty
Cutting Edge:
  1/2 In. x 6 In. Reversible
Approximate Operating Weight: 305 lbs.
Angle: 360 Degrees

Angle - Reverse:
  0 and 15 Degrees Each Side
Angle - Forward:
  0, 15, and 30 Degrees Each Side
Skid Shoe Bundle: Optional
End Plate Bundle: Optional
Assembly/Set-Up Time:
  15 Minutes (Approximate)

CODE	ATTACHMENT IDENTIFIER	DESCRIPTION	SUGGESTED LIST PRICE USD ($)

Select One Code From Each Required Category

BASE MACHINE

1283XF		RB2084 - 7 Ft. Standard Duty Rear Blade *Order in multiples of two.*	879.00

ATTACHMENTS FOR FIELD CONVERSION

		Miscellaneous:	
	5WS346765	End Plate Kit (RB2060, RB2072 and RB2084)	133.00
	5WS101376	French Operator's Manual and Decal Kit (RB20 and RB20L Series)	26.45
	5WS346745	Skid Shoes Kit (RB2060, RB2072 and RB2084)	204.00

RB2084 - 7 Ft. Standard Duty Rear Blade
Continued

THIS PAGE IS INTENTIONALLY LEFT BLANK

RB2160 - 5 Ft. Medium Duty Rear Blade

Equipment for Base Machine

Hitch: 3-Point Category I
  and iMatch
Working Width: 60 In.
Working Weight: 392 lbs.
Tractor HP:
  65 HP (Maximum - 2WD)
  60 HP (Maximum - 4WD)
Tilt: 3 Positions,
  Up to 22 degrees Up or Down
Shipping Weight: 426 lbs.
Angle/Pivot: 360 Degrees
Moldboard Height: 17 In.
Moldboard Thickness: 1/4 In.
Duty: Medium Duty
Cutting Edge:
  1/2 In. x 6 In. Reversible

Assembly/Set-Up Time: 60 Minutes
Angle - Forward:
  3 Positions, Up to 53 Degrees Each Side
Angle - Reverse:
  3 Positions, Up to 53 Degrees Each Side
Skid Shoes (Pair): Optional
End Plates (Pair): Optional
Parking Stand: Standard
Offset: 6 In. or 12 In. Left or Right

CODE	ATTACHMENT IDENTIFIER	DESCRIPTION	SUGGESTED LIST PRICE USD ($)

Select One Code From Each Required Category

BASE MACHINE

1301XF		RB2160 - 5 Ft. Medium Duty Rear Blade	1,179.00

ATTACHMENTS FOR FIELD CONVERSION

		Miscellaneous:	
	5TMC6200001	End Plates - Pair (RB21 Series)	106.40
	5TMC6100001	Skid Shoes - Pair (RB21 Series)	117.60

RB2160 - 5 Ft. Medium Duty Rear Blade
Continued

THIS PAGE IS INTENTIONALLY LEFT BLANK

RB2172 - 6 Ft. Medium Duty Rear Blade

Equipment for Base Machine

Hitch: 3-Point Category I
  and iMatch
Working Width: 72 In.
Working Weight: 422 lbs.
Tractor HP:
  65 HP (Maximum - 2WD)
  60 HP (Maximum - 4WD)
Tilt: 3 Positions,
  Up to 22 degrees Up or Down
Shipping Weight: 456 lbs.
Angle/Pivot: 360 Degrees
Moldboard Height: 17 In.
Moldboard Thickness: 1/4 In.
Duty: Medium Duty
Cutting Edge:
  1/2 In. x 6 In. Reversible

Assembly/Set-Up Time: 60 Minutes
Angle - Forward:
  3 Positions, Up to 53 Degrees Each Side
Angle - Reverse:
  3 Positions, Up to 53 Degrees Each Side
Skid Shoes (Pair): Optional
End Plates (Pair): Optional
Parking Stand: Standard
Offset: 6 In. or 12 In. Left or Right

CODE	ATTACHMENT IDENTIFIER	DESCRIPTION	SUGGESTED LIST PRICE USD ($)

Select One Code From Each Required Category

BASE MACHINE

1302XF		RB2172 - 6 Ft. Medium Duty Rear Blade	1,250.00

ATTACHMENTS FOR FIELD CONVERSION

		Miscellaneous:	
	5TMC6200001	End Plates - Pair (RB21 Series)	106.40
	5TMC6100001	Skid Shoes - Pair (RB21 Series)	117.60

RB2172 - 6 Ft. Medium Duty Rear Blade
Continued

THIS PAGE IS INTENTIONALLY LEFT BLANK

RB2184 - 7 Ft. Medium Duty Rear Blade

Equipment for Base Machine

Hitch: 3-Point Category I
  and iMatch
Working Width: 84 In.
Working Weight: 448 lbs.
Tractor HP:
  65 HP (Maximum - 2WD)
  60 HP (Maximum - 4WD)
Tilt: 3 Positions,
  Up to 22 degrees Up or Down
Shipping Weight: 482 lbs.
Angle/Pivot: 360 Degrees
Moldboard Height: 17 In.
Moldboard Thickness: 1/4 In.
Duty: Medium Duty
Cutting Edge:
  1/2 In. x 6 In. Reversible

Assembly/Set-Up Time: 60 Minutes
Angle - Forward:
  3 Positions, Up to 53 Degrees Each Side
Angle - Reverse:
  3 Positions, Up to 53 Degrees Each Side
Skid Shoes (Pair): Optional
End Plates (Pair): Optional
Parking Stand: Standard
Offset - 6 In. or 12 In. Left or Right

CODE	ATTACHMENT IDENTIFIER	DESCRIPTION	SUGGESTED LIST PRICE USD ($)

Select One Code From Each Required Category

BASE MACHINE

1303XF		RB2184 - 7 Ft. Medium Duty Rear Blade	1,325.00

ATTACHMENTS FOR FIELD CONVERSION

		Miscellaneous:	
	5TMC6200001	End Plates - Pair (RB21 Series)	106.40
	5TMC6100001	Skid Shoes - Pair (RB21 Series)	117.60

RB2184 - 7 Ft. Medium Duty Rear Blade
Continued

THIS PAGE IS INTENTIONALLY LEFT BLANK

RB2196 - 8 Ft. Medium Duty Rear Blade

Equipment for Base Machine

Hitch: 3-Point Category I
  and iMatch
Working Width: 96 In.
Working Weight: 476 lbs.
Tractor HP:
  65 HP (Maximum - 2WD)
  60 HP (Maximum - 4WD)
Tilt: 3 Positions,
  Up to 22 degrees Up or Down
Shipping Weight: 510 lbs.
Angle/Pivot: 360 Degrees
Moldboard Height: 17 In.
Moldboard Thickness: 1/4 In.
Duty: Medium Duty
Cutting Edge:
  1/2 In. x 6 In. Reversible

Assembly/Set-Up Time: 60 Minutes
Angle - Forward:
  3 Positions, Up to 53 Degrees Each Side
Angle - Reverse:
  3 Positions, Up to 53 Degrees Each Side
Skid Shoes (Pair): Optional
End Plates (Pair): Optional
Parking Stand: Standard
Offset - 6 In. or 12 In. Left or Right

CODE	ATTACHMENT IDENTIFIER	DESCRIPTION	SUGGESTED LIST PRICE USD ($)

Select One Code From Each Required Category

BASE MACHINE

1304XF		RB2196 - 8 Ft. Medium Duty Rear Blade	1,384.00

ATTACHMENTS FOR FIELD CONVERSION

		Miscellaneous:	
	5TMC6200001	End Plates - Pair (RB21 Series)	106.40
	5TMC6100001	Skid Shoes - Pair (RB21 Series)	117.60

RB2196 - 8 Ft. Medium Duty Rear Blade
Continued

THIS PAGE IS INTENTIONALLY LEFT BLANK

RB2160H - 5 Ft. Medium Duty Hydraulic Rear Blade

Equipment for Base Machine

Hitch: 3-Point Category I
  and iMatch
Working Width: 60 in. (1,524 mm)
Working Weight: 379 lbs. (171.9 kg)
Tractor HP:
  50 HP (37.3 kW) (Maximum - 2WD)
  45 HP (33.6 kW) (Maximum - 4WD)
Tilt: 3 Positions,
  Up to 20 degrees Up or Down
Shipping Weight: 459 lbs. (208.2 kg)
Angle/Pivot: 360 Degrees
Moldboard Height: 15 in. (381 mm)
Moldboard Thickness: 1/4 in. 6.35 mm)
Duty: Medium Duty
Cutting Edge:
  1/2 x 6 in. Reversible (12.7 x 152.4 mm)

Assembly/Set-Up Time: 60 Minutes
Angle - Forward:
  Hydraulic, Up to 40 Degrees Each Side
Angle - Reverse:
  Hydraulic, Up to 40 Degrees Each Side
Skid Shoes (Pair): Optional
End Plates (Pair): Optional
Parking Stand: Standard
Offset: 6 in. or 12 in. Left or Right (152.4 mm or 304.8 mm)

CODE	ATTACHMENT IDENTIFIER	DESCRIPTION	SUGGESTED LIST PRICE USD ($)
		Select One Code From Each Required Category	
		BASE MACHINE	
1551XF		RB2160H - 5 Ft. Medium Duty Hydraulic Rear Blade *Includes one cylinder.*	1,354.00
		ATTACHMENTS - ORDER AS DESIRED	
9000		Skid Shoes (Pair)	72.00
9010		End Plates (Pair)	69.00
		ATTACHMENTS FOR FIELD CONVERSION	
		Miscellaneous:	
	5TMKMCN021	End Plates (Pair)	77.28
	5TMKHCN101	Hydraulic Cylinder Kit *Includes one cylinder.*	516.38
	5TMKMCN022	Skid Shoes (Pair)	80.64

RB2160H - 5 Ft. Medium Duty Hydraulic Rear Blade
Continued

THIS PAGE IS INTENTIONALLY LEFT BLANK

RB2172H - 6 Ft. Medium Duty Hydraulic Rear Blade

Equipment for Base Machine

Hitch: 3-Point Category I
  and iMatch
Working Width: 72 in. (1,828.8 mm)
Working Weight: 405 lbs. (183.7 kg)
Tractor HP:
  50 HP (37.3 kW) (Maximum - 2WD)
  45 HP (33.6 kW) (Maximum - 4WD)
Tilt: 3 Positions,
  Up to 20 degrees Up or Down
Shipping Weight: 489 lbs. (221.8 kg)
Angle/Pivot: 360 Degrees
Moldboard Height: 15 in. (381 mm)
Moldboard Thickness: 1/4 in. 6.35 mm)
Duty: Medium Duty
Cutting Edge:
  1/2 x 6 in. Reversible (12.7 x 152.4 mm)

Assembly/Set-Up Time: 60 Minutes
Angle - Forward:
  Hydraulic, Up to 40 Degrees Each Side
Angle - Reverse:
  Hydraulic, Up to 40 Degrees Each Side
Skid Shoes (Pair): Optional
End Plates (Pair): Optional
Parking Stand: Standard
Offset: 6 in. or 12 in. Left or Right (152.4 mm or 304.8 mm)

CODE	ATTACHMENT IDENTIFIER	DESCRIPTION	SUGGESTED LIST PRICE USD ($)
		Select One Code From Each Required Category	
		BASE MACHINE	
1552XF		RB2172H - 6 Ft. Medium Duty Hydraulic Rear Blade *Includes one cylinder.*	1,430.00
		ATTACHMENTS - ORDER AS DESIRED	
9000		Skid Shoes (Pair)	72.00
9010		End Plates (Pair)	69.00
		ATTACHMENTS FOR FIELD CONVERSION	
		Miscellaneous:	
	5TMKMCN021	End Plates (Pair)	77.28
	5TMKHCN101	Hydraulic Cylinder Kit *Includes one cylinder.*	516.38
	5TMKMCN022	Skid Shoes (Pair)	80.64

RB2172H - 6 Ft. Medium Duty Hydraulic Rear Blade
Continued

THIS PAGE IS INTENTIONALLY LEFT BLANK

RB2184H - 7 Ft. Medium Duty Hydraulic Rear Blade

Equipment for Base Machine

Hitch: 3-Point Category I
  and iMatch
Working Width: 84 in. (2,133.6 mm)
Working Weight: 431 lbs. (195.5 kg)
Tractor HP:
  50 HP (37.3 kW) (Maximum - 2WD)
  45 HP (33.6 kW) (Maximum - 4WD)
Tilt: 3 Positions,
  Up to 20 degrees Up or Down
Shipping Weight: 515 lbs. (233.6 kg)
Angle/Pivot: 360 Degrees
Moldboard Height: 15 in. (381 mm)
Moldboard Thickness: 1/4 in. 6.35 mm)
Duty: Medium Duty
Cutting Edge:
  1/2 x 6 in. Reversible (12.7 x 152.4 mm)

Assembly/Set-Up Time: 60 Minutes
Angle - Forward:
  Hydraulic, Up to 40 Degrees Each Side
Angle - Reverse:
  Hydraulic, Up to 40 Degrees Each Side
Skid Shoes (Pair): Optional
End Plates (Pair): Optional
Parking Stand: Standard
Offset: 6 in. or 12 in. Left or Right (152.4 mm or 304.8 mm)

CODE	ATTACHMENT IDENTIFIER	DESCRIPTION	SUGGESTED LIST PRICE USD ($)
		Select One Code From Each Required Category	
		BASE MACHINE	
1553XF		RB2184H - 7 Ft. Medium Duty Hydraulic Rear Blade *Includes one cylinder.*	1,515.00
		ATTACHMENTS - ORDER AS DESIRED	
9000		Skid Shoes (Pair)	72.00
9010		End Plates (Pair)	69.00
		ATTACHMENTS FOR FIELD CONVERSION	
		Miscellaneous:	
	5TMKMCN021	End Plates (Pair)	77.28
	5TMKHCN101	Hydraulic Cylinder Kit *Includes one cylinder.*	516.38
	5TMKMCN022	Skid Shoes (Pair)	80.64

RB2184H - 7 Ft. Medium Duty Hydraulic Rear Blade
Continued

THIS PAGE IS INTENTIONALLY LEFT BLANK

RB2196H - 8Ft. Medium Duty Hydraulic Rear Blade

Equipment for Base Machine

Hitch: 3-Point Category I
  and iMatch
Working Width: 96 in. (2,438.4 mm)
Working Weight: 456 lbs. (206.8 kg)
Tractor HP:
  50 HP (37.3 kW) (Maximum - 2WD)
  45 HP (33.6 kW) (Maximum - 4WD)
Tilt: 3 Positions,
  Up to 20 degrees Up or Down
Shipping Weight: 543 lbs. (246.3 kg)
Angle/Pivot: 360 Degrees
Moldboard Height: 15 in. (381 mm)
Moldboard Thickness: 1/4 in. 6.35 mm)
Duty: Medium Duty
Cutting Edge:
  1/2 x 6 in. Reversible (12.7 x 152.4 mm)

Assembly/Set-Up Time: 60 Minutes
Angle - Forward:
  Hydraulic, Up to 40 Degrees Each Side
Angle - Reverse:
  Hydraulic, Up to 40 Degrees Each Side
Skid Shoes (Pair): Optional
End Plates (Pair): Optional
Parking Stand: Standard
Offset: 6 in. or 12 in. Left or Right (152.4 mm or 304.8 mm)

CODE	ATTACHMENT IDENTIFIER	DESCRIPTION	SUGGESTED LIST PRICE USD ($)
		Select One Code From Each Required Category	
		BASE MACHINE	
1554XF		RB2196H - 8Ft. Medium Duty Hydraulic Rear Blade *Includes one cylinder.*	1,643.00
		ATTACHMENTS - ORDER AS DESIRED	
9000		Skid Shoes (Pair)	72.00
9010		End Plates (Pair)	69.00
		ATTACHMENTS FOR FIELD CONVERSION	
		Miscellaneous:	
	5TMKMCN021	End Plates (Pair)	77.28
	5TMKHCN101	Hydraulic Cylinder Kit *Includes one cylinder.*	516.38
	5TMKMCN022	Skid Shoes (Pair)	80.64

RB2196H - 8Ft. Medium Duty Hydraulic Rear Blade
Continued

THIS PAGE IS INTENTIONALLY LEFT BLANK

RB2272 - 6 Ft. Medium Plus Rear Blade

Equipment for Base Machine

Hitch:
  3 Point Category II and
  ASAE Category II Quick Coupler
Tractor HP:
  80 HP (Maximum - 2WD)
  70 HP (Maximum - 4WD)
Shipping Weight: 795 lbs.
Moldboard Height: 19 In.
Duty: Medium Plus Duty
Assembly/Set-Up Time: 120 Minutes
Cutting Edge:
  1/2 In. x 6 In. Reversible
Angle/Pivot: 360 Degrees
Moldboard Thickness: 1/4 In.
Moldboard Length: 72 In.
Approximate Operating Weight: 738 lb.
Offset: 9 In. or 18 In. Left or Right
Tilt: 3 Positions,
  Up to 23 Degrees, Up or Down
Angle-Forward:
  3 Positions, Up to 45 Degrees Each Side
Angle-Reverse:
  3 Positions, Up to 45 Degrees Each Side
Skid Shoes (Pair): Optional
End Plates (Pair): Optional
Hydraulic Offset Kit:
  Optional (Hoses and Fittings Included)
Parking Stand: Standard

CODE	ATTACHMENT IDENTIFIER	DESCRIPTION	SUGGESTED LIST PRICE USD ($)

Select One Code From Each Required Category

BASE MACHINE

1311XF		RB2272 - 6 Ft. Medium Plus Rear Blade	2,116.00

ATTACHMENTS FOR FIELD CONVERSION

		Miscellaneous:	
	5TMC6200003	End Plates - Pair	135.52
	5TMC6300073	Hydraulic Cylinder Kit	462.24
	5TMC6100002	Skid Shoes - Pair	126.56

RB2272 - 6 Ft. Medium Plus Rear Blade
Continued

THIS PAGE IS INTENTIONALLY LEFT BLANK

RB2284 - 7 Ft. Medium Plus Rear Blade

Equipment for Base Machine

Hitch:
  3 Point Category II and
  ASAE Category II Quick Coupler
Tractor HP:
  80 HP (Maximum - 2WD)
  70 HP (Maximum - 4WD)
Shipping Weight: 812 lbs.
Moldboard Height: 19 In.
Duty: Medium Plus Duty
Assembly/Set-Up Time: 120 Minutes
Cutting Edge:
  1/2 In. x 6 In. Reversible
Angle/Pivot: 360 Degrees
Moldboard Thickness: 1/4 In.
Moldboard Length: 84 In.
Approximate Operating Weight: 755 lbs.
Offset: 9 In. or 18 In. Left or Right
Tilt: 3 Positions,
  Up to 23 Degrees, Up or Down
Angle-Forward:
  3 Positions, Up to 45 Degrees Each Side
Angle-Reverse:
  3 Positions, Up to 45 Degrees Each Side
Skid Shoes (Pair): Optional
End Plates (Pair): Optional
Hydraulic Offset Kit:
  Optional (Hoses and Fittings Included)
Parking Stand: Standard

CODE	ATTACHMENT IDENTIFIER	DESCRIPTION	SUGGESTED LIST PRICE USD ($)

Select One Code From Each Required Category

BASE MACHINE

1312XF		RB2284 - 7 Ft. Medium Plus Rear Blade	2,289.00

ATTACHMENTS FOR FIELD CONVERSION

		Miscellaneous:	
	5TMC6200003	End Plates - Pair	135.52
	5TMC6300073	Hydraulic Cylinder Kit	462.24
	5TMC6100002	Skid Shoes - Pair	126.56

RB2284 - 7 Ft. Medium Plus Rear Blade
Continued

THIS PAGE IS INTENTIONALLY LEFT BLANK

RB2296 - 8 Ft. Medium Plus Rear Blade

Equipment for Base Machine

Hitch:
  3 Point Category II and
  ASAE Category II Quick Coupler
Tractor HP:
  80 HP (Maximum - 2WD)
  70 HP (Maximum - 4WD)
Shipping Weight: 829 lbs.
Moldboard Height: 19 In.
Duty: Medium Plus Duty
Assembly/Set-Up Time: 120 Minutes
Cutting Edge:
  1/2 In. x 6 In. Reversible
Angle/Pivot: 360 Degrees
Moldboard Thickness: 1/4 In.
Moldboard Length: 96 In.
Approximate Operating Weight: 772 lbs.
Offset: 9 In. or 18 In. Left or Right

Tilt: 3 Positions,
  Up to 23 Degrees, Up or Down
Angle-Forward:
  3 Positions, Up to 45 Degrees Each Side
Angle-Reverse:
  3 Positions, Up to 45 Degrees Each Side
Skid Shoes (Pair): Optional
End Plates (Pair): Optional
Hydraulic Offset Kit:
  Optional (Hoses and Fittings Included)
Parking Stand: Standard

CODE	ATTACHMENT IDENTIFIER	DESCRIPTION	SUGGESTED LIST PRICE USD ($)

Select One Code From Each Required Category

BASE MACHINE

1313XF		RB2296 - 8 Ft. Medium Plus Rear Blade	2,394.00

ATTACHMENTS FOR FIELD CONVERSION

		Miscellaneous:	
	5TMC6200003	End Plates - Pair	135.52
	5TMC6300073	Hydraulic Cylinder Kit	462.24
	5TMC6100002	Skid Shoes - Pair	126.56

RB2296 - 8 Ft. Medium Plus Rear Blade
Continued

THIS PAGE IS INTENTIONALLY LEFT BLANK

RB2307 - 7 Ft. Heavy Duty Rear Blade

Equipment for Base Machine

```
Hitch:
  3-Point Category II and
  ASAE Category II Quick Coupler
Tractor HP:
  120 HP (Maximum - 2WD)
  110 HP (Maximum - 4WD)
Tilt: 3 Positions,
  Up to 23 Degrees Up or Down
Shipping Weight: 1117 lbs.
Offset: 9 In. or 18 In. Left or Right
Moldboard Thickness: 5/16 In.
Moldboard Length: 84 In.
Moldboard Height: 19 In.
Duty: Heavy Duty
Cutting Edge:
  1/2 In. x 6 In. Reversible
Approximate Operating Weight: 1060 lbs.
Assembly/Set-Up Time:
  120 Minutes (Approximate)
Angle: 360 Degrees
Angle - Forward:
  3 Positions, Up to 45 Degrees Each Side
Angle - Reverse:
  3 Positions, Up to 45 Degrees Each Side
Skid Shoes (Pair): Optional
End Plates (Pair): Optional
Parking Stand: Standard
Hydraulic Tilt, Angle and Offset Kits:
  Optional (Hoses and Fittings Included)
```

CODE	ATTACHMENT IDENTIFIER	DESCRIPTION	SUGGESTED LIST PRICE USD ($)
		Select One Code From Each Required Category	
		BASE MACHINE	
1321XF		RB2307 - 7 Ft. Heavy Duty Rear Blade	2,539.00
		OPERATION	
1000		Manual Kit	In Base Price
1010		Hydraulic Cylinder Kit, Angle - Offset - Tilt *Includes 3 cylinders.*	1,302.00
		ATTACHMENTS - ORDER AS DESIRED	
9000		Skid Shoes (Pair)	113.00
9010		End Plates (Pair)	121.00
9020		Hydraulic Diverter Kit	421.00
		ATTACHMENTS FOR FIELD CONVERSION	
		Miscellaneous:	
	5TMC6200003	End Plates - Pair	135.52
	5TMC0040025K	French Operator's Manual and Decal Kit *Rear Blades RB2307, RB2308, RB2309 and RB2310.*	6.40
	5TMC6300073	Hydraulic Cylinder Kit *Offset or Tilt - Includes 1 Cylinder (RB23 Series).*	462.24
	5TMC6300083	Hydraulic Cylinder Kit - Angle - Includes 1 Cylinder (RB23 Series)	470.91
	5TMC6300051	Hydraulic Diverter Kit (RB23 Series)	454.68

RB2307 - 7 Ft. Heavy Duty Rear Blade
Continued

CODE	ATTACHMENT IDENTIFIER	DESCRIPTION	SUGGESTED LIST PRICE USD ($)
		ATTACHMENTS FOR FIELD CONVERSION ...Continued...	
	5TMC6100002	Skid Shoes - Pair	126.56

RB2308 - 8 Ft. Heavy Duty Rear Blade

Equipment for Base Machine

```
Hitch:
  3-Point Category II and
  ASAE Category II Quick Coupler
Tractor HP:
  120 HP (Maximum - 2WD)
  110 HP (Maximum - 4WD)
Tilt: 3 Positions,
  Up to 23 Degrees Up or Down
Shipping Weight: 1196 lbs.
Offset: 9 In. or 18 In. Left or Right
Moldboard Thickness: 5/16 In.
Moldboard Length: 96 In.
Moldboard Height: 19 In.
Duty: Heavy Duty
Cutting Edge:
  1/2 In. x 6 In. Reversible
Approximate Operating Weight: 1139 lbs.
Assembly/Set-Up Time:
  120 Minutes (Approximate)
Angle: 360 Degrees
Angle - Forward:
  3 Positions, Up to 45 Degrees Each Side
Angle - Reverse:
  3 Positions, Up to 45 Degrees Each Side
Skid Shoes (Pair): Optional
End Plates (Pair): Optional
Parking Stand: Standard
Hydraulic Tilt, Angle and Offset Kits:
  Optional (Hoses and Fittings Included)
```

CODE	ATTACHMENT IDENTIFIER	DESCRIPTION	SUGGESTED LIST PRICE USD ($)
		Select One Code From Each Required Category	
		BASE MACHINE	
1322XF		RB2308 - 8 Ft. Heavy Duty Rear Blade	2,653.00
		OPERATION	
1000		Manual Kit	In Base Price
1010		Hydraulic Cylinder Kit, Angle - Offset - Tilt *Includes 3 cylinders.*	1,302.00
		ATTACHMENTS - ORDER AS DESIRED	
9000		Skid Shoes (Pair)	113.00
9010		End Plates (Pair)	121.00
9020		Hydraulic Diverter Kit	421.00
		ATTACHMENTS FOR FIELD CONVERSION	
		Miscellaneous:	
	5TMC6200003	End Plates - Pair	135.52
	5TMC0040025K	French Operator's Manual and Decal Kit *Rear Blades RB2307, RB2308, RB2309 and RB2310.*	6.40
	5TMC6300073	Hydraulic Cylinder Kit *Offset or Tilt - Includes 1 Cylinder (RB23 Series).*	462.24
	5TMC6300083	Hydraulic Cylinder Kit - Angle - Includes 1 Cylinder (RB23 Series)	470.91
	5TMC6300051	Hydraulic Diverter Kit (RB23 Series)	454.68

RB2308 - 8 Ft. Heavy Duty Rear Blade
Continued

CODE	ATTACHMENT IDENTIFIER	DESCRIPTION	SUGGESTED LIST PRICE USD ($)
		ATTACHMENTS FOR FIELD CONVERSION ...Continued...	
	5TMC6100002	Skid Shoes - Pair	126.56

RB2309 - 9 Ft. Heavy Duty Rear Blade

Equipment for Base Machine

```
Hitch:
  3-Point Category II and
  ASAE Category II Quick Coupler
Tractor HP:
  120 HP (Maximum - 2WD)
  110 HP (Maximum - 4WD)
Tilt: 3 Positions,
  Up to 23 Degrees Up or Down
Shipping Weight: 1297 lbs.
Offset: 9 In. or 18 In. Left or Right
Moldboard Thickness: 5/16 In.
Moldboard Length: 108 In.
Moldboard Height: 19 In.
Duty: Heavy Duty
Cutting Edge:
  1/2 In. x 6 In. Reversible
Approximate Operating Weight: 1240 lbs.
Assembly/Set-Up Time:
  120 Minutes (Approximate)
Angle: 360 Degrees
Angle - Forward:
  3 Positions, Up to 45 Degrees Each Side
Angle - Reverse:
  3 Positions, Up to 45 Degrees Each Side
Skid Shoes (Pair): Optional
End Plates (Pair): Optional
Parking Stand: Standard
Hydraulic Tilt, Angle and Offset Kits:
  Optional (Hoses and Fittings Included)
```

CODE	ATTACHMENT IDENTIFIER	DESCRIPTION	SUGGESTED LIST PRICE USD ($)
		Select One Code From Each Required Category	
		BASE MACHINE	
1323XF		RB2309 - 9 Ft. Heavy Duty Rear Blade	2,807.00
		OPERATION	
1000		Manual Kit	In Base Price
1010		Hydraulic Cylinder Kit, Angle - Offset - Tilt *Includes 3 cylinders.*	1,302.00
		ATTACHMENTS - ORDER AS DESIRED	
9000		Skid Shoes (Pair)	113.00
9010		End Plates (Pair)	121.00
9020		Hydraulic Diverter Kit	421.00
		ATTACHMENTS FOR FIELD CONVERSION	
		Miscellaneous:	
	5TMC6200003	End Plates - Pair	135.52
	5TMC0040025K	French Operator's Manual and Decal Kit *Rear Blades RB2307, RB2308, RB2309 and RB2310.*	6.40
	5TMC6300073	Hydraulic Cylinder Kit *Offset or Tilt - Includes 1 Cylinder (RB23 Series).*	462.24
	5TMC6300083	Hydraulic Cylinder Kit - Angle - Includes 1 Cylinder (RB23 Series)	470.91
	5TMC6300051	Hydraulic Diverter Kit (RB23 Series)	454.68

RB2309 - 9 Ft. Heavy Duty Rear Blade
Continued

CODE	ATTACHMENT IDENTIFIER	DESCRIPTION	SUGGESTED LIST PRICE USD ($)
		ATTACHMENTS FOR FIELD CONVERSION ...Continued...	
	5TMC6100002	Skid Shoes - Pair	126.56

RB2310 - 10 Ft. Heavy Duty Rear Blade

Equipment for Base Machine

```
Hitch:
  3-Point Category II and
  ASAE Category II Quick Coupler
Tractor HP:
  120 HP (Maximum - 2WD)
  110 HP (Maximum - 4WD)
Tilt: 3 Positions,
  Up to 23 Degrees Up or Down
Shipping Weight: 1357 lbs.
Offset: 9 In. or 18 In. Left or Right
Moldboard Thickness: 5/16 In.
Moldboard Length: 120 In.
Moldboard Height: 19 In.
Duty: Heavy Duty
Cutting Edge:
  1/2 In. x 6 In. Reversible
Approximate Operating Weight: 1300 lbs.
Assembly/Set-Up Time:
  120 Minutes (Approximate)
Angle: 360 Degrees
Angle - Forward:
  3 Positions, Up to 45 Degrees Each Side
Angle - Reverse:
  3 Positions, Up to 45 Degrees Each Side
Skid Shoes (Pair): Optional
End Plates (Pair): Optional
Parking Stand: Standard
Hydraulic Tilt, Angle and Offset Kits:
  Optional (Hoses and Fittings Included)
```

CODE	ATTACHMENT IDENTIFIER	DESCRIPTION	SUGGESTED LIST PRICE USD ($)
		Select One Code From Each Required Category	
		BASE MACHINE	
1324XF		RB2310 - 10 Ft. Heavy Duty Rear Blade	2,905.00
		OPERATION	
1000		Manual Kit	In Base Price
1010		Hydraulic Cylinder Kit, Angle - Offset - Tilt *Includes 3 cylinders.*	1,302.00
		ATTACHMENTS - ORDER AS DESIRED	
9000		Skid Shoes (Pair)	113.00
9010		End Plates (Pair)	121.00
9020		Hydraulic Diverter Kit	421.00
		ATTACHMENTS FOR FIELD CONVERSION	
		Miscellaneous:	
	5TMC6200003	End Plates - Pair	135.52
	5TMC0040025K	French Operator's Manual and Decal Kit *Rear Blades RB2307, RB2308, RB2309 and RB2310.*	6.40
	5TMC6300073	Hydraulic Cylinder Kit *Offset or Tilt - Includes 1 Cylinder (RB23 Series).*	462.24
	5TMC6300083	Hydraulic Cylinder Kit - Angle - Includes 1 Cylinder (RB23 Series)	470.91
	5TMC6300051	Hydraulic Diverter Kit (RB23 Series)	454.68

RB2310 - 10 Ft. Heavy Duty Rear Blade
Continued

CODE	ATTACHMENT IDENTIFIER	DESCRIPTION	SUGGESTED LIST PRICE USD ($)
		ATTACHMENTS FOR FIELD CONVERSION ...Continued...	
	5TMC6100002	Skid Shoes - Pair	126.56

RB2408 - 8 Ft. Heavy Plus Rear Blade

Equipment for Base Machine

Hitch:
  3-Point Category II, III and
  ASAE Quick Coupler Category II, III
Tractor HP:
  160 HP (Maximum - 2WD)
  145 HP (Maximum - 4WD)
Tilt: 2 Positions,
  Up to 15 Degrees, Up or Down
Shipping Weight: 1554 lbs.
Offset:
  0 In. to 28 In. Right,
  0 In. to 26 In. Left
Moldboard Thickness: 5/16 In.
Moldboard Length: 96 In.
Moldboard Height: 19 In.
Duty: Heavy Plus Duty
Cutting Edge:
  1/2 In. x 6 In. Reversible
Assembly/Set-Up Time:
  180 Minutes (Approximate)

Approximate Operating Weight: 1451 lbs.
Angle: 360 Degrees
Angle Forward:
  4 Positions, Up to 26 Degrees Right
  5 Positions, Up to 38 Degrees Left
Angle Reverse:
  4 Positions, Up to 26 Degrees Right
  5 Positions, Up to 38 Degrees Left
Parking Stand: Standard
Skid Shoe Bundle: Optional
End Plate Bundle: Optional
Tailwheel: Optional
Hydraulic Tilt and Offset Kits:
  Optional (Hoses and Fittings Included)

CODE	ATTACHMENT IDENTIFIER	DESCRIPTION	SUGGESTED LIST PRICE USD ($)

Select One Code From Each Required Category

BASE MACHINE

1331XF		RB2408 - 8 Ft. Heavy Plus Rear Blade	4,348.00

OPERATION

1000		Manual Kit *Includes quantity 1 hydraulic angle cylinder, mechanical offset link, mechanical tilt link.*	In Base Price
1010		Hydraulic Cylinder Kit, Angle - Offset - Tilt *Includes 3 cylinders.*	902.00

ATTACHMENTS - ORDER AS DESIRED

9000		Skid Shoes (Pair)	37.00
9010		End Plates (Pair)	130.00
9020		Hydraulic Diverter Kit	402.00
9030		Hydraulic Relief Kit	629.00
9040		Hydraulic Tailwheel Kit, Single Gauge Wheel	1,055.00
9050		Hydraulic Tailwheel Kit, Dual Gauge Wheel	1,390.00

ATTACHMENTS FOR FIELD CONVERSION

		Miscellaneous:	
	5TMC6200004	End Plates - Pair (RB24 Series)	145.60

RB2408 - 8 Ft. Heavy Plus Rear Blade

Continued

CODE	ATTACHMENT IDENTIFIER	DESCRIPTION	SUGGESTED LIST PRICE USD ($)
		ATTACHMENTS FOR FIELD CONVERSION ...Continued...	
	5TMC6300053	Hydraulic Cylinder Kit - Offset or Angle - Includes 1 Cylinder (RB24 Series)	525.47
	5TMC6300063	Hydraulic Cylinder Kit - Tilt - Includes 1 Cylinder (RB24 Series)	373.89
	5TMC6600051	Hydraulic Diverter Kit (RB24 Series)	434.16
	5TMC6600061	Hydraulic Relief Kit (RB24 Series)	679.32
	5TMC6100003	Skid Shoes - Pair (RB24 Series)	41.44
	5TMC6600002	TailWheel Kit - Dual Gauge Wheel - Hydraulic (RB24 Series)	1,501.20
	5TMC6600001	TailWheel Kit - Single Gauge Wheel - Hydraulic (RB24 Series)	1,139.40

RB2409 - 9 Ft. Heavy Plus Rear Blade

Equipment for Base Machine

Hitch:
  3-Point Category II, III and
  ASAE Quick Coupler Category II, III
Tractor HP:
  160 HP (Maximum - 2WD)
  145 HP (Maximum - 4WD)
Tilt: 2 Positions,
  Up to 15 Degrees, Up or Down
Shipping Weight: 1604 lbs.
Offset:
  0 In. to 28 In. Right
  0 In. to 26 In. Left
Moldboard Thickness: 5/16 In.
Moldboard Length: 108 In.
Moldboard Height: 19 In.
Duty: Heavy Plus Duty
Cutting Edge:
  1/2 In. x 6 In. Reversible
Assembly/Set-Up Time:
  180 Minutes (Approximate)

Approximate Operating Weight: 1501 lbs.
Angle: 360 Degrees
Angle Forward:
  4 Positions, Up to 26 Degrees Right
  5 Positions, Up to 38 Degrees Left
Angle Reverse:
  4 Positions, Up to 26 Degrees Right
  5 Positions, Up to 38 Degrees Left
Parking Stand: Standard
Skid Shoe Bundle: Optional
End Plate Bundle: Optional
Tailwheel: Optional
Hydraulic Tilt and Offset Kits:
  Optional (Hoses and Fittings Included)

CODE	ATTACHMENT IDENTIFIER	DESCRIPTION	SUGGESTED LIST PRICE USD ($)

Select One Code From Each Required Category

BASE MACHINE

1332XF		RB2409 - 9 Ft. Heavy Plus Rear Blade	4,462.00

OPERATION

1000		Manual Kit *Includes quantity 1 hydraulic angle cylinder, mechanical offset link, mechanical tilt link.*	In Base Price
1010		Hydraulic Cylinder Kit, Angle - Offset - Tilt *Includes 3 cylinders.*	902.00

ATTACHMENTS - ORDER AS DESIRED

9000		Skid Shoes (Pair)	37.00
9010		End Plates (Pair)	130.00
9020		Hydraulic Diverter Kit	402.00
9030		Hydraulic Relief Kit	629.00
9040		Hydraulic Tailwheel Kit, Single Gauge Wheel	1,055.00
9050		Hydraulic Tailwheel Kit, Dual Gauge Wheel	1,390.00

ATTACHMENTS FOR FIELD CONVERSION

		Miscellaneous:	
	5TMC6200004	End Plates - Pair (RB24 Series)	145.60

RB2409 - 9 Ft. Heavy Plus Rear Blade

Continued

CODE	ATTACHMENT IDENTIFIER	DESCRIPTION	SUGGESTED LIST PRICE USD ($)
		ATTACHMENTS FOR FIELD CONVERSION ...Continued...	
	5TMC6300053	Hydraulic Cylinder Kit - Offset or Angle - Includes 1 Cylinder (RB24 Series)	525.47
	5TMC6300063	Hydraulic Cylinder Kit - Tilt - Includes 1 Cylinder (RB24 Series)	373.89
	5TMC6600051	Hydraulic Diverter Kit (RB24 Series)	434.16
	5TMC6600061	Hydraulic Relief Kit (RB24 Series)	679.32
	5TMC6100003	Skid Shoes - Pair (RB24 Series)	41.44
	5TMC6600002	TailWheel Kit - Dual Gauge Wheel - Hydraulic (RB24 Series)	1,501.20
	5TMC6600001	TailWheel Kit - Single Gauge Wheel - Hydraulic (RB24 Series)	1,139.40

RB2410 - 10 Ft. Heavy Plus Rear Blade

Equipment for Base Machine

```
Hitch:
  3-Point Category II, III and
  ASAE Quick Coupler Category II, III
Tractor HP:
  160 HP (Maximum - 2WD)
  145 HP (Maximum - 4WD)
Tilt: 2 Positions,
  Up to 15 Degrees, Up or Down
Shipping Weight: 1653 lbs.
Offset:
  0 In. to 28 In. Right
  0 In. to 26 In. Left
Moldboard Thickness: 5/16 In.
Moldboard Length: 120 In.
Moldboard Height: 19 In.
Duty: Heavy Plus Duty
Cutting Edge:
  1/2 In. x 6 In. Reversible
Assembly/Set-Up Time:
  180 Minutes (Approximate)
Approximate Operating Weight: 1550 lbs.
Angle: 360 Degrees
Angle Forward:
  4 Positions, Up to 26 Degrees Right
  5 Positions, Up to 38 Degrees Left
Angle Reverse:
  4 Positions, Up to 26 Degrees Right
  5 Positions, Up to 38 Degrees Left
Parking Stand: Standard
Skid Shoe Bundle: Optional
End Plates Bundle: Optional
Tailwheel: Optional
Hydraulic Tilt and Offset Kits:
  Optional (Hoses and Fittings Included)
```

CODE	ATTACHMENT IDENTIFIER	DESCRIPTION	SUGGESTED LIST PRICE USD ($)

Select One Code From Each Required Category

BASE MACHINE

1333XF		RB2410 - 10 Ft. Heavy Plus Rear Blade	4,560.00

OPERATION

1000		Manual Kit *Includes quantity 1 hydraulic angle cylinder, mechanical offset link, mechanical tilt link.*	In Base Price
1010		Hydraulic Cylinder Kit, Angle - Offset - Tilt *Includes 3 cylinders.*	902.00

ATTACHMENTS - ORDER AS DESIRED

9000		Skid Shoes (Pair)	37.00
9010		End Plates (Pair)	130.00
9020		Hydraulic Diverter Kit	402.00
9030		Hydraulic Relief Kit	629.00
9040		Hydraulic Tailwheel Kit, Single Gauge Wheel	1,055.00
9050		Hydraulic Tailwheel Kit, Dual Gauge Wheel	1,390.00

ATTACHMENTS FOR FIELD CONVERSION

		Miscellaneous:	
	5TMC6200004	End Plates - Pair (RB24 Series)	145.60

RB2410 - 10 Ft. Heavy Plus Rear Blade

Continued

CODE	ATTACHMENT IDENTIFIER	DESCRIPTION	SUGGESTED LIST PRICE USD ($)
		ATTACHMENTS FOR FIELD CONVERSION ...Continued...	
	5TMC6300053	Hydraulic Cylinder Kit - Offset or Angle - Includes 1 Cylinder (RB24 Series)	525.47
	5TMC6300063	Hydraulic Cylinder Kit - Tilt - Includes 1 Cylinder (RB24 Series)	373.89
	5TMC6600051	Hydraulic Diverter Kit (RB24 Series)	434.16
	5TMC6600061	Hydraulic Relief Kit (RB24 Series)	679.32
	5TMC6100003	Skid Shoes - Pair (RB24 Series)	41.44
	5TMC6600002	TailWheel Kit - Dual Gauge Wheel - Hydraulic (RB24 Series)	1,501.20
	5TMC6600001	TailWheel Kit - Single Gauge Wheel - Hydraulic (RB24 Series)	1,139.40

RB5060 - 5 Ft. Standard Duty Rear Blade

Equipment for Base Machine

3-Point Hitch:
  Category I
Working Width: 60 In.
Operational Weight: 308 lbs.
Tractor HP: 20 to 56 HP
Tilt Positions: Seven
Offset: 12 In. Left or Right
Shipping Weight:
  674 lbs. for Quantity 2
Pivot: 360 Degrees
Parking Stand: Standard
Packaged 2 Per Crate
Moldboard Height: 14.5 In.
Moldboard Length: 60 In.
Moldboard Thickness: 1/4 In.

Duty: Standard Duty
Cutting Edge:
  3/8 In. x 6 In. Reversible
Assembly/Set-Up Time: 15 Minutes
Angle - Forward:
  0, 15 and 30 Degrees Each Side
Angle - Reverse:
  0, 15 and 30 Degrees Each Side
Skid Shoes: NA

CODE	ATTACHMENT IDENTIFIER	DESCRIPTION	SUGGESTED LIST PRICE USD ($)

Select One Code From Each Required Category

BASE MACHINE

1651XF	RB5060 - 5 Ft. Standard Duty Rear Blade *Order in multiples of two.*	687.00

RB5060 - 5 Ft. Standard Duty Rear Blade
Continued

THIS PAGE IS INTENTIONALLY LEFT BLANK

RB5072 - 6 Ft. Standard Duty Rear Blade

Equipment for Base Machine

3-Point Hitch:
  Category I
Working Width: 72 In.
Operational Weight: 332 lbs.
Tractor HP: 20 to 56 HP
Tilt Positions: Seven
Offset: 12 In. Left or Right
Shipping Weight:
  722 lbs. for Quantity 2
Pivot: 360 Degrees
Parking Stand: Standard
Packaged 2 Per Crate
Moldboard Height: 14.5 In.
Moldboard Length: 72 In.
Moldboard Thickness: 1/4 In.

Duty: Standard Duty
Cutting Edge:
  3/8 In. x 6 In. Reversible
Assembly/Set-Up Time: 15 Minutes
Angle - Forward:
  0, 15 and 30 Degrees Each Side
Angle - Reverse:
  0, 15 and 30 Degrees Each Side
Skid Shoes: NA

CODE	ATTACHMENT IDENTIFIER	DESCRIPTION	SUGGESTED LIST PRICE USD ($)

Select One Code From Each Required Category

BASE MACHINE

1652XF	RB5072 - 6 Ft. Standard Duty Rear Blade *Order in multiples of two.*	739.00

RB5072 - 6 Ft. Standard Duty Rear Blade
Continued

THIS PAGE IS INTENTIONALLY LEFT BLANK

RB5084 - 7 Ft. Standard Duty Rear Blade

Equipment for Base Machine

3-Point Hitch:
  Category I
Working Width: 84 In.
Operational Weight: 348 lbs.
Tractor HP: 20 to 56 HP
Tilt Positions: Seven
Offset: 12 In. Left or Right
Shipping Weight:
  754 lbs. for Quantity 2
Pivot: 360 Degrees
Parking Stand: Standard
Packaged 2 Per Crate
Moldboard Height: 14.5 In.
Moldboard Length: 84 In.
Moldboard Thickness: 1/4 In.

Duty: Standard Duty
Cutting Edge:
  3/8 In. x 6 In. Reversible
Assembly/Set-Up Time: 15 Minutes
Angle - Forward:
  0, 15 and 30 Degrees Each Side
Angle - Reverse:
  0, 15 and 30 Degrees Each Side
Skid Shoes: NA

CODE	ATTACHMENT IDENTIFIER	DESCRIPTION	SUGGESTED LIST PRICE USD ($)

Select One Code From Each Required Category

BASE MACHINE

1653XF	RB5084 - 7 Ft. Standard Duty Rear Blade *Order in multiples of two.*	790.00

RB5084 - 7 Ft. Standard Duty Rear Blade
Continued

THIS PAGE IS INTENTIONALLY LEFT BLANK

RB5096 - 8 Ft. Standard Duty Rear Blade

Equipment for Base Machine

3-Point Hitch:
  Category I
Working Width: 96 In.
Operational Weight: 380 lbs.
Tractor HP: 20 to 56 HP
Tilt Positions: Seven
Offset: 12 In. Left or Right
Shipping Weight:
  818 lbs. for Quantity 2
Pivot: 360 Degrees
Parking Stand: Standard
Packaged 2 Per Crate
Moldboard Height: 14.5 In.
Moldboard Length: 96 In.
Moldboard Thickness: 1/4 In.

Duty: Standard Duty
Cutting Edge:
  3/8 In. x 6 In. Reversible
Assembly/Set-Up Time: 15 Minutes
Angle - Forward:
  0, 15 and 30 Degrees Each Side
Angle - Reverse:
  0, 15 and 30 Degrees Each Side
Skid Shoes: NA

CODE	ATTACHMENT IDENTIFIER	DESCRIPTION	SUGGESTED LIST PRICE USD ($)

Select One Code From Each Required Category

BASE MACHINE

1654XF	RB5096 - 8 Ft. Standard Duty Rear Blade *Order in multiples of two.*	845.00

RB5096 - 8 Ft. Standard Duty Rear Blade
Continued

THIS PAGE IS INTENTIONALLY LEFT BLANK

RB5048L - 4 Ft. Limited Category 1 Economy Duty Rear Blade

Equipment for Base Machine

3-Point Hitch:
  Category I
Working Width: 48 In.
Operational Weight: 186 lbs.
Tractor HP: 18 PTO HP Max
Tilt Positions: None
Offset: None
Shipping Weight:
  430 lbs. for Quantity 2
Pivot: 360 Degrees
Parking Stand: Standard
Packaged 2 Per Crate
Moldboard Height: 14.5 In.
Moldboard Length: 48 In.
Moldboard Thickness: 1/4 In.
Duty: Economy Duty

Cutting Edge:
  3/8 In. x 6 In. Reversible
Assembly/Set-Up Time: 15 Minutes
  (Approximate) - Per Pair
Angle - Forward:
  0, 15 and 30 Degrees Each Side
Angle - Reverse:
  0, 15 and 30 Degrees Each Side
Skid Shoes: NA

CODE	ATTACHMENT IDENTIFIER	DESCRIPTION	SUGGESTED LIST PRICE USD ($)

Select One Code From Each Required Category

BASE MACHINE

1751XF	RB5048L - 4 Ft. Limited Category 1 Economy Duty Rear Blade *Order in multiples of two.*	465.00

RB5048L - 4 Ft. Limited Category 1 Economy Duty Rear Blade
Continued

THIS PAGE IS INTENTIONALLY LEFT BLANK

RB5060L - 5 Ft. Limited Category 1 Economy Duty Rear Blade

Equipment for Base Machine

3-Point Hitch:
  Category I
Working Width: 60 In.
Operational Weight: 205 lbs.
Tractor HP: 18 PTO HP Max
Tilt Positions: None
Offset: None
Shipping Weight:
  468 lbs. for Quantity 2
Pivot: 360 Degrees
Parking Stand: Standard
Packaged 2 Per Crate
Moldboard Height: 14.5 In.
Moldboard Length: 60 In.
Moldboard Thickness: 1/4 In.
Duty: Economy Duty

Cutting Edge:
  3/8 In. x 6 In. Reversible
Assembly/Set-Up Time: 15 Minutes
  (Approximate) - Per Pair
Angle - Forward:
  0, 15 and 30 Degrees Each Side
Angle - Reverse:
  0, 15 and 30 Degrees Each Side
Skid Shoes: NA

CODE	ATTACHMENT IDENTIFIER	DESCRIPTION	SUGGESTED LIST PRICE USD ($)

Select One Code From Each Required Category

BASE MACHINE

1752XF	RB5060L - 5 Ft. Limited Category 1 Economy Duty Rear Blade *Order in multiples of two.*	524.00

RB5060L - 5 Ft. Limited Category 1 Economy Duty Rear Blade
Continued

THIS PAGE IS INTENTIONALLY LEFT BLANK

SW2160 - 60 In. Hydraulic, 300 Series Carrier Loader Mount Rotary Broom with Hydraulic Angle Adjustment and HP2025 Hydraulic Power Unit - U.S.

Equipment for Base Machine

Function: Sweeping
Working Width: 60 In. (1,524 mm)
Working Width at Max Angle: 55 In. (1,397 mm)
Transport Width: 72 In. (1,828.8 mm)
Operating Weight: 860 lb. (390 kg.)
Standard Bristle Material: Poly, 50/50 Steel/Poly
Available as Replacement
Brush Speed: 160 RPM
Brush Diameter: 32 In. (812.8 mm)
Angle Range: 23 degrees left or right
Hood Thickness: 14 gauge
Side Frame Thickness: 3/16 In. (4.8 mm)
Parking Stands Included
Approximate Set-Up Time: 30 Minutes
Function: Hydraulic Power Unit
Pressure: 2700 psi
Flow: 16 gpm
Reservoir Capacity: 15 gal.
System Capacity: 17 gal.
System Features: Pressure relieve valve, filter, temperature
and oil level gauge, and thermal protection switch
Hoses, Tips, and Brackets included
Tractor RPM: 540 RPM
PTO Manufacturer: Comer
Parking Stand: Standard
Hitch Category: Category I
Quick Hitch Compatibility:
iMatch Compatible
Approximate Set-Up Time: 120 Minutes

CODE	ATTACHMENT IDENTIFIER	DESCRIPTION	SUGGESTED LIST PRICE USD ($)
		Select One Code From Each Required Category	
		BASE MACHINE	
1591XF		SW2160 - 60 In. Hydraulic, 300 Series Carrier Loader Mount Rotary Broom with Hydraulic Angle Adjustment and HP2025 Hydraulic Power Unit - U.S. *Must only be used with HP2025 Hydraulic Power Pack Unit.*	12,522.00
		HYDRAULIC POWER UNITS	
1000		HP2025 - Hydraulic Power Unit, 25 HP *Includes wiring harness to control the loader mounted implement.*	In Base Price
1095		Less HP2025 Hydraulic Power Unit	-6,304.00
		OIL COOLER	
2000		Oil Cooler for HP2025 and HP2134 Hydraulic Power Units *Includes high efficiency oil cooler, electric fan, bolted support, hoses, fittings and installation instructions. Recommended for application generating high heat.* *Not available with option Code 1095.*	In Base Price
2095		Less Oil Cooler	-1,660.00
		ATTACHMENTS - ORDER AS DESIRED	
		Dust Deflector:	
9000		SW2160 Steel/Rubber Dust Deflector Kit	136.59
		Dust Suppression Kit:	
9010		SW21 Dust Suppression Kit *Includes 60 gallon water tank, electric pump, nozzles, hoses and fittings, electrical harness with switch and installation instructions. Requires the steel/rubber dust deflector kit.*	1,096.23

SW2160 - 60 In. Hydraulic, 300 Series Carrier Loader Mount Rotary Broom with Hydraulic Angle Adjustment and HP2025 Hydraulic Power Unit - U.S.

Continued

CODE	ATTACHMENT IDENTIFIER	DESCRIPTION	SUGGESTED LIST PRICE USD ($)
		ATTACHMENTS - ORDER AS DESIRED ...Continued...	
		Gauge Wheel Kit:	
9020		SW21 Gauge Wheel Kit *Includes two pairs 8 In. diameter by 3.5 In. wide solid wheels, mounting brackets and hardware.*	369.00
		Lawn Dethatching Kit:	
9030		SW21 Lawn Dethatching Kit *Includes support components, hardware and installation instruction. Gauge wheel kit required. Compatible with dust suppression kit.*	360.00
9040		Additional Wiring Harness for HP2025 and HP2134 Hydraulic Power Units for Open Operator Station Tractors *Includes complete wiring harness from battery to switch in the console.* *Not available with option Code 1095.*	92.00
		ATTACHMENTS FOR FIELD CONVERSION	
		Miscellaneous:	
	5RDF0038	Additional Wiring Harness for HP2025 and HP2134 Hydraulic Power Units for Open Operator Station Tractors *Includes complete wiring harness from battery to switch in the console.*	100.04
	5RDF0036	Oil Cooler for HP2025 and HP2134 Hydraulic Power Units *Includes high efficiency oil cooler, electric fan, bolted support, hoses, fittings and installation instructions. Recommended for application generating high heat.*	1,816.59
	5RDF0035	SW21 Dust Suppression Kit *Includes 60 gallon water tank, electric pump, nozzles, hoses and fittings, electrical harness with switch and installation instructions. Requires the steel/rubber dust deflector kit.*	1,149.45
	5RDF0033	SW21 Gauge Wheel Kit *Includes two pairs 8 In. diameter by 3.5 In. wide solid wheels, mounting brackets and hardware.*	386.87
	5RDF0034	SW21 Lawn Dethatching Kit *Requires gauge wheel kit, compatible with dust suppression kit.*	377.48
	5RDF0043	SW2160 50/50 Poly/Steel Wafter Brush Replacement Kit *Includes required quantity of wafters to replace entire brush.*	578.36
	5RDF0030	SW2160 Dust Deflector Kit	148.52
	5RDF0040	SW2160 Poly Wafter Brush Replacement Kit *Includes required quantity of wafters to replace entire brush.*	578.36
	5RDF0039	Wiring Harness for HP2025 and HP2134 Hydraulic Power Units to control Loader Mounted Attachment *Includes complete wiring harness from switch in the console to 3 cavities connectors for front implements.*	88.55

SW2172 - 72 In. Hydraulic, 300/400 Series Carrier Loader Mount Rotary Broom with Hydraulic Angle Adjustment and HP2025 Hydraulic Power Unit - U.S.

Equipment for Base Machine

Function: Sweeping
Working Width: 72 In. (1,828.8 mm)
Working Width at Max Angle: 66 In. (1,676.4 mm)
Transport Width: 84 In. (2,133.6 mm)
Operating Weight: 890 lb. (403.7 kg.)
Standard Bristle Material: Poly, 50/50 Steel/Poly
Available as Replacement
Brush Speed: 160 RPM
Brush Diameter: 32 In. (812.8 mm)
Angle Range: 23 degrees left or right
Hood Thickness: 14 gauge
Side Frame Thickness: 3/16 In. (4.8 mm)
Parking Stands Included
Approximate Set-Up Time: 30 Minutes
Function: Hydraulic Power Unit
Pressure: 2700 psi
Flow: 16 gpm
Reservoir Capacity: 15 gal.
System Capacity: 17 gal.
System Features: Pressure relieve valve, filter, temperature
and oil level gauge, and thermal protection switch
Hoses, Tips, and Brackets included
Tractor RPM: 540 RPM
PTO Manufacturer: Comer
Parking Stand: Standard
Hitch Category: Category I
Quick Hitch Compatibility:
iMatch Compatible
Approximate Set-Up Time: 120 Minutes
Optional:
Function: Hydraulic Power Unit
Pressure: 2700 psi
Flow: 16 gpm
Reservoir Capacity: 15 gal.
System Capacity: 17 gal.
System Features: Pressure relieve valve, filter, temperature
and oil level gauge, and thermal protection switch
Hoses, Tips, and Brackets included
Tractor RPM: 540 RPM
PTO Manufacturer: Comer
Parking Stand: Standard
Hitch Category: Category I
Quick Hitch Compatibility:
iMatch Compatible
Approximate Set-Up Time: 120 Minutes

CODE	ATTACHMENT IDENTIFIER	DESCRIPTION	SUGGESTED LIST PRICE USD ($)

Select One Code From Each Required Category

BASE MACHINE

1592XF	SW2172 - 72 In. Hydraulic, 300/400 Series Carrier Loader Mount Rotary Broom with Hydraulic Angle Adjustment and HP2025 Hydraulic Power Unit - U.S. *Must be used with either the HP2025 or HP2134 Hydraulic Power Pack Units.*	12,784.00

HYDRAULIC POWER UNITS

1000	HP2025 - Hydraulic Power Unit, 25 HP *Includes wiring harness to control the loader mounted implement.*	In Base Price
1010	HP2134 - Hydraulic Power Unit, 34 HP *Includes wiring harness to control the loader mounted implement.*	104.00
1095	Less HP2025 Hydraulic Power Unit	-6,304.00

OIL COOLER

2000	Oil Cooler for HP2025 and HP2134 Hydraulic Power Units *Includes high efficiency oil cooler, electric fan, bolted support, hoses, fittings and installation instructions. Recommended for application generating high heat.* *Not available with option Code 1095.*	In Base Price
2095	Less Oil Cooler	-1,660.00

ATTACHMENTS - ORDER AS DESIRED

SW2172 - 72 In. Hydraulic, 300/400 Series Carrier Loader Mount Rotary Broom with Hydraulic Angle Adjustment and HP2025 Hydraulic Power Unit - U.S.

Continued

CODE	ATTACHMENT IDENTIFIER	DESCRIPTION	SUGGESTED LIST PRICE USD ($)
		ATTACHMENTS - ORDER AS DESIRED ...Continued...	
		Dust Deflector:	
9000		SW2172 Steel/Rubber Dust Deflector Kit	145.56
		Dust Suppression Kit:	
9010		SW21 Dust Suppression Kit *Includes 60 gallon water tank, electric pump, nozzles, hoses and fittings, electrical harness with switch and installation instructions. Requires the steel/rubber dust deflector kit.*	1,096.23
		Gauge Wheel Kit:	
9020		SW21 Gauge Wheel Kit *Includes two pairs 8 In. diameter by 3.5 In. wide solid wheels, mounting brackets and hardware.*	369.00
		Lawn Dethatching Kit:	
9030		SW21 Lawn Dethatching Kit *Includes support components, hardware and installation instruction. Gauge wheel kit required. Compatible with dust suppression kit.*	360.00
9040		Additional Wiring Harness for HP2025 and HP2134 Hydraulic Power Units for Open Operator Station Tractors *Includes complete wiring harness from battery to switch in the console.* *Not available with option Code 1095.*	92.00
		ATTACHMENTS FOR FIELD CONVERSION	
		Miscellaneous:	
	5RDF0038	Additional Wiring Harness for HP2025 and HP2134 Hydraulic Power Units for Open Operator Station Tractors *Includes complete wiring harness from battery to switch in the console.*	100.04
	5RDF0036	Oil Cooler for HP2025 and HP2134 Hydraulic Power Units *Includes high efficiency oil cooler, electric fan, bolted support, hoses, fittings and installation instructions. Recommended for application generating high heat.*	1,816.59
	5RDF0035	SW21 Dust Suppression Kit *Includes 60 gallon water tank, electric pump, nozzles, hoses and fittings, electrical harness with switch and installation instructions. Requires the steel/rubber dust deflector kit.*	1,149.45
	5RDF0033	SW21 Gauge Wheel Kit *Includes two pairs 8 In. diameter by 3.5 In. wide solid wheels, mounting brackets and hardware.*	386.87
	5RDF0034	SW21 Lawn Dethatching Kit *Requires gauge wheel kit, compatible with dust suppression kit.*	377.48
	5RDF0044	SW2172 50/50 Poly/Steel Wafter Brush Replacement Kit *Includes required quantity of wafters to replace entire brush.*	683.16
	5RDF0031	SW2172 Dust Deflector Kit	158.17

SW2172 - 72 In. Hydraulic, 300/400 Series Carrier Loader Mount Rotary Broom with Hydraulic Angle Adjustment and HP2025 Hydraulic Power Unit - U.S.

Continued

CODE	ATTACHMENT IDENTIFIER	DESCRIPTION	SUGGESTED LIST PRICE USD ($)
		ATTACHMENTS FOR FIELD CONVERSION ...Continued...	
	5RDF0041	SW2172 Poly Wafter Brush Replacement Kit *Includes required quantity of wafters to replace entire brush.*	683.16
	5RDF0039	Wiring Harness for HP2025 and HP2134 Hydraulic Power Units to control Loader Mounted Attachment *Includes complete wiring harness from switch in the console to 3 cavities connectors for front implements.*	88.55

SW2172 - 72 In. Hydraulic, 300/400 Series Carrier Loader Mount Rotary Broom with Hydraulic Angle Adjustment and HP2025 Hydraulic Power Unit - U.S.

Continued

THIS PAGE IS INTENTIONALLY LEFT BLANK

SW2184 - 84 In. Hydraulic, 400 Series Carrier Loader Mount Rotary Broom with Hydraulic Angle Adjustment and HP2134 Hydraulic Power Unit - U.S.

Equipment for Base Machine

Function: Sweeping
Working Width: 84 In. (2,133.6 mm)
Working Width at Max Angle: 77 In. (1,955.8 mm)
Transport Width: 96 In. (2,438.4 mm)
Operating Weight: 920 lb. (417.3 kg.)
Standard Bristle Material: Poly, 50/50 Steel/Poly
Available as Replacement
Brush Speed: 160 RPM
Brush Diameter: 32 In. (812.8 mm)
Angle Range: 23 degrees left or right
Hood Thickness: 14 gauge
Side Frame Thickness: 3/16 In. (4.8 mm)
Parking Stands Included
Approximate Set-Up Time: 30 Minutes
Function: Hydraulic Power Unit
Pressure: 2700 psi
Flow: 16 gpm
Reservoir Capacity: 15 gal.
System Capacity: 17 gal.
System Features: Pressure relieve valve, filter, temperature
and oil level gauge, and thermal protection switch
Hoses, Tips, and Brackets included
Tractor RPM: 540 RPM
PTO Manufacturer: Comer
Parking Stand: Standard
Hitch Category: Category I
Quick Hitch Compatibility:
iMatch Compatible
Approximate Set-Up Time: 120 Minutes

CODE	ATTACHMENT IDENTIFIER	DESCRIPTION	SUGGESTED LIST PRICE USD ($)
		Select One Code From Each Required Category	
		BASE MACHINE	
1593XF		SW2184 - 84 In. Hydraulic, 400 Series Carrier Loader Mount Rotary Broom with Hydraulic Angle Adjustment and HP2134 Hydraulic Power Unit - U.S. *Must only be used with HP2134 Hydraulic Power Pack Unit.*	13,504.00
		HYDRAULIC POWER UNITS	
1010		HP2134 - Hydraulic Power Unit, 34 HP *Includes wiring harness to control the loader mounted implement.*	In Base Price
1095		Less HP2134 Hydraulic Power Unit	-6,412.00
		OIL COOLER	
2000		Oil Cooler for HP2025 and HP2134 Hydraulic Power Units *Includes high efficiency oil cooler, electric fan, bolted support, hoses, fittings and installation instructions. Recommended for application generating high heat.* *Not available with option Code 1095.*	In Base Price
2095		Less Oil Cooler	-1,660.00
		ATTACHMENTS - ORDER AS DESIRED	
		Dust Deflector:	
9000		SW2184 Steel/Rubber Dust Deflector Kit	156.10
		Dust Suppression Kit:	
9010		SW21 Dust Suppression Kit *Includes 60 gallon water tank, electric pump, nozzles, hoses and fittings, electrical harness with switch and installation instructions. Requires the steel/rubber dust deflector kit.*	1,096.23

SW2184 - 84 In. Hydraulic, 400 Series Carrier Loader Mount Rotary Broom with Hydraulic Angle Adjustment and HP2134 Hydraulic Power Unit - U.S.

Continued

CODE	ATTACHMENT IDENTIFIER	DESCRIPTION	SUGGESTED LIST PRICE USD ($)
		ATTACHMENTS - ORDER AS DESIRED ...Continued...	
		Gauge Wheel Kit:	
9020		SW21 Gauge Wheel Kit *Includes two pairs 8 In. diameter by 3.5 In. wide solid wheels, mounting brackets and hardware.*	369.00
		Lawn Dethatching Kit:	
9030		SW21 Lawn Dethatching Kit *Includes support components, hardware and installation instruction. Gauge wheel kit required. Compatible with dust suppression kit.*	360.00
9040		Additional Wiring Harness for HP2025 and HP2134 Hydraulic Power Units for Open Operator Station Tractors *Includes complete wiring harness from battery to switch in the console.* *Not available with option Code 1095.*	92.00
		ATTACHMENTS FOR FIELD CONVERSION	
		Miscellaneous:	
	5RDF0038	Additional Wiring Harness for HP2025 and HP2134 Hydraulic Power Units for Open Operator Station Tractors *Includes complete wiring harness from battery to switch in the console.*	100.04
	5RDF0037	Hydraulic Power Unit Cooler Upgrade (HP2134) *Includes complete cooling unit and thermal by-pass manifold. Bolted support for manifold, hoses, fittings, wiring harness and installation instructions. Only for first year power units sold together with a SB2176. Recommended for application generating high heat.*	2,505.58
	5RDF0036	Oil Cooler for HP2025 and HP2134 Hydraulic Power Units *Includes high efficiency oil cooler, electric fan, bolted support, hoses, fittings and installation instructions. Recommended for application generating high heat.*	1,816.59
	5RDF0035	SW21 Dust Suppression Kit *Includes 60 gallon water tank, electric pump, nozzles, hoses and fittings, electrical harness with switch and installation instructions. Requires the steel/rubber dust deflector kit.*	1,149.45
	5RDF0033	SW21 Gauge Wheel Kit *Includes two pairs 8 In. diameter by 3.5 In. wide solid wheels, mounting brackets and hardware.*	386.87
	5RDF0034	SW21 Lawn Dethatching Kit *Requires gauge wheel kit, compatible with dust suppression kit.*	377.48
	5RDF0045	SW2184 50/50 Poly/Steel Wafter Brush Replacement Kit *Includes required quantity of wafters to replace entire brush.*	799.61
	5RDF0032	SW2184 Dust Deflector Kit	163.68
	5RDF0042	SW2184 Poly Wafter Brush Replacement Kit *Includes required quantity of wafters to replace entire brush.*	797.67

SW2184 - 84 In. Hydraulic, 400 Series Carrier Loader Mount Rotary Broom with Hydraulic Angle Adjustment and HP2134 Hydraulic Power Unit - U.S.

Continued

CODE	ATTACHMENT IDENTIFIER	DESCRIPTION	SUGGESTED LIST PRICE USD ($)
		ATTACHMENTS FOR FIELD CONVERSION ...Continued...	
	5RDF0039	Wiring Harness for HP2025 and HP2134 Hydraulic Power Units to control Loader Mounted Attachment *Includes complete wiring harness from switch in the console to 3 cavities connectors for front implements.*	88.55

SW2184 - 84 In. Hydraulic, 400 Series Carrier Loader Mount Rotary Broom with Hydraulic Angle Adjustment and HP2134 Hydraulic Power Unit - U.S.

Continued

THIS PAGE IS INTENTIONALLY LEFT BLANK

SW2160 - 60 In. Hydraulic, 300 Series Loader Mount Rotary Broom with Hydraulic Angle Adjustment and HP2025 Hydraulic Power Unit - Canada

Equipment for Base Machine

Function: Sweeping
Working Width: 60 In. (1,524 mm)
Working Width at Max Angle: 55 In. (1,397 mm)
Transport Width: 72 In. (1,828.8 mm)
Operating Weight: 860 lb. (390 kg.)
Standard Bristle Material: Poly, 50/50 Steel/Poly
Available as Replacement
Brush Speed: 160 RPM
Brush Diameter: 32 In. (812.8 mm)
Angle Range: 23 degrees left or right
Hood Thickness: 14 gauge
Side Frame Thickness: 3/16 In. (4.8 mm)
Parking Stands Included
Approximate Set-Up Time: 30 Minutes
Function: Hydraulic Power Unit
Pressure: 2700 psi
Flow: 16 gpm
Reservoir Capacity: 15 gal.
System Capacity: 17 gal.
System Features: Pressure relieve valve, filter, temperature
and oil level gauge, and thermal protection switch
Hoses, Tips, and Brackets included
Tractor RPM: 540 RPM
PTO Manufacturer: Comer
Parking Stand: Standard
Hitch Category: Category I
Quick Hitch Compatibility:
iMatch Compatible
Approximate Set-Up Time: 120 Minutes

CODE	ATTACHMENT IDENTIFIER	DESCRIPTION	SUGGESTED LIST PRICE USD ($)
		Select One Code From Each Required Category	
		BASE MACHINE	
159AXF		SW2160 - 60 In. Hydraulic, 300 Series Loader Mount Rotary Broom with Hydraulic Angle Adjustment and HP2025 Hydraulic Power Unit - Canada *Must only be used with HP2025 Hydraulic Power Pack Unit.*	12,712.69
		HYDRAULIC POWER UNITS	
1000		HP2025 - Hydraulic Power Unit, 25 HP *Includes wiring harness to control the loader mounted implement.*	In Base Price
1095		Less HP2025 Hydraulic Power Unit	-6,400.00
		OIL COOLER	
2000		Oil Cooler for HP2025 and HP2134 Hydraulic Power Units *Includes high efficiency oil cooler, electric fan, bolted support, hoses, fittings and installation instructions. Recommended for application generating high heat.* *Not available with option Code 1095.*	In Base Price
2095		Less Oil Cooler	-1,685.28
		ATTACHMENTS - ORDER AS DESIRED	
		Dust Deflector:	
9000		SW2160 Steel/Rubber Dust Deflector Kit	138.67
		Dust Suppression Kit:	
9010		SW21 Dust Suppression Kit *Includes 60 gallon water tank, electric pump, nozzles, hoses and fittings, electrical harness with switch and installation instructions. Requires the steel/rubber dust deflector kit.*	1,112.92

SW2160 - 60 In. Hydraulic, 300 Series Loader Mount Rotary Broom with Hydraulic Angle Adjustment and HP2025 Hydraulic Power Unit - Canada

Continued

CODE	ATTACHMENT IDENTIFIER	DESCRIPTION	SUGGESTED LIST PRICE USD ($)
		ATTACHMENTS - ORDER AS DESIRED ...Continued...	
		Gauge Wheel Kit:	
9020		SW21 Gauge Wheel Kit *Includes two pairs 8 In. diameter by 3.5 In. wide solid wheels, mounting brackets and hardware.*	374.62
		Lawn Dethatching Kit:	
9030		SW21 Lawn Dethatching Kit *Includes support components, hardware and installation instruction. Gauge wheel kit required. Compatible with dust suppression kit.*	365.48
9040		Additional Wiring Harness for HP2025 and HP2134 Hydraulic Power Units for Open Operator Station Tractors *Includes complete wiring harness from battery to switch in the console.* *Not available with option Code 1095.*	93.40
		ATTACHMENTS FOR FIELD CONVERSION	
		Miscellaneous:	
	5RDF0038	Additional Wiring Harness for HP2025 and HP2134 Hydraulic Power Units for Open Operator Station Tractors *Includes complete wiring harness from battery to switch in the console.*	100.04
	5RDF0036	Oil Cooler for HP2025 and HP2134 Hydraulic Power Units *Includes high efficiency oil cooler, electric fan, bolted support, hoses, fittings and installation instructions. Recommended for application generating high heat.*	1,816.59
	5RDF0035	SW21 Dust Suppression Kit *Includes 60 gallon water tank, electric pump, nozzles, hoses and fittings, electrical harness with switch and installation instructions. Requires the steel/rubber dust deflector kit.*	1,149.45
	5RDF0033	SW21 Gauge Wheel Kit *Includes two pairs 8 In. diameter by 3.5 In. wide solid wheels, mounting brackets and hardware.*	386.87
	5RDF0034	SW21 Lawn Dethatching Kit *Requires gauge wheel kit, compatible with dust suppression kit.*	377.48
	5RDF0043	SW2160 50/50 Poly/Steel Wafter Brush Replacement Kit *Includes required quantity of wafters to replace entire brush.*	578.36
	5RDF0030	SW2160 Dust Deflector Kit	148.52
	5RDF0040	SW2160 Poly Wafter Brush Replacement Kit *Includes required quantity of wafters to replace entire brush.*	578.36
	5RDF0039	Wiring Harness for HP2025 and HP2134 Hydraulic Power Units to control Loader Mounted Attachment *Includes complete wiring harness from switch in the console to 3 cavities connectors for front implements.*	88.55

SW2172 - 72 In. Hydraulic, 300/400 Series Carrier Loader Mount Rotary Broom with Hydraulic Angle Adjustment and HP2025 Hydraulic Power Unit - Canada

Equipment for Base Machine

Function: Sweeping
Working Width: 72 In. (1,828.8 mm)
Working Width at Max Angle: 66 In. (1,676.4 mm)
Transport Width: 84 In. (2,133.6 mm)
Operating Weight: 890 lb. (403.7 kg.)
Standard Bristle Material: Poly, 50/50 Steel/Poly
Available as Replacement
Brush Speed: 160 RPM
Brush Diameter: 32 In. (812.8 mm)
Angle Range: 23 degrees left or right
Hood Thickness: 14 gauge
Side Frame Thickness: 3/16 In. (4.8 mm)
Parking Stands Included
Approximate Set-Up Time: 30 Minutes
Function: Hydraulic Power Unit
Pressure: 2700 psi
Flow: 16 gpm
Reservoir Capacity: 15 gal.
System Capacity: 17 gal.
System Features: Pressure relieve valve, filter, temperature
and oil level gauge, and thermal protection switch
Hoses, Tips, and Brackets included
Tractor RPM: 540 RPM
PTO Manufacturer: Comer
Parking Stand: Standard
Hitch Category: Category I
Quick Hitch Compatibility:
iMatch Compatible
Approximate Set-Up Time: 120 Minutes
Optional:
Function: Hydraulic Power Unit
Pressure: 2700 psi
Flow: 16 gpm
Reservoir Capacity: 15 gal.
System Capacity: 17 gal.
System Features: Pressure relieve valve, filter, temperature
and oil level gauge, and thermal protection switch
Hoses, Tips, and Brackets included
Tractor RPM: 540 RPM
PTO Manufacturer: Comer
Parking Stand: Standard
Hitch Category: Category I
Quick Hitch Compatibility:
iMatch Compatible
Approximate Set-Up Time: 120 Minutes

CODE	ATTACHMENT IDENTIFIER	DESCRIPTION	SUGGESTED LIST PRICE USD ($)

Select One Code From Each Required Category

BASE MACHINE

159BXF	SW2172 - 72 In. Hydraulic, 300/400 Series Carrier Loader Mount Rotary Broom with Hydraulic Angle Adjustment and HP2025 Hydraulic Power Unit - Canada *Must be used with either the HP2025 or HP2134 Hydraulic Power Pack Units.*	12,978.68

HYDRAULIC POWER UNITS

1000	HP2025 - Hydraulic Power Unit, 25 HP *Includes wiring harness to control the loader mounted implement.*	In Base Price
1010	HP2134 - Hydraulic Power Unit, 34 HP *Includes wiring harness to control the loader mounted implement.*	105.58
1095	Less HP2025 Hydraulic Power Unit	-6,400.00

OIL COOLER

2000	Oil Cooler for HP2025 and HP2134 Hydraulic Power Units *Includes high efficiency oil cooler, electric fan, bolted support, hoses, fittings and installation instructions. Recommended for application generating high heat.* *Not available with option Code 1095.*	In Base Price
2095	Less Oil Cooler	-1,685.28

ATTACHMENTS - ORDER AS DESIRED

SW2172 - 72 In. Hydraulic, 300/400 Series Carrier Loader Mount Rotary Broom with Hydraulic Angle Adjustment and HP2025 Hydraulic Power Unit - Canada

Continued

CODE	ATTACHMENT IDENTIFIER	DESCRIPTION	SUGGESTED LIST PRICE USD ($)
		ATTACHMENTS - ORDER AS DESIRED ...Continued...	
		Dust Deflector:	
9000		SW2172 Steel/Rubber Dust Deflector Kit	147.78
		Dust Suppression Kit:	
9010		SW21 Dust Suppression Kit *Includes 60 gallon water tank, electric pump, nozzles, hoses and fittings, electrical harness with switch and installation instructions. Requires the steel/rubber dust deflector kit.*	1,112.92
		Gauge Wheel Kit:	
9020		SW21 Gauge Wheel Kit *Includes two pairs 8 In. diameter by 3.5 In. wide solid wheels, mounting brackets and hardware.*	374.62
		Lawn Dethatching Kit:	
9030		SW21 Lawn Dethatching Kit *Includes support components, hardware and installation instruction. Gauge wheel kit required. Compatible with dust suppression kit.*	365.48
9040		Additional Wiring Harness for HP2025 and HP2134 Hydraulic Power Units for Open Operator Station Tractors *Includes complete wiring harness from battery to switch in the console.* *Not available with option Code 1095.*	93.40
		ATTACHMENTS FOR FIELD CONVERSION	
		Miscellaneous:	
	5RDF0038	Additional Wiring Harness for HP2025 and HP2134 Hydraulic Power Units for Open Operator Station Tractors *Includes complete wiring harness from battery to switch in the console.*	100.04
	5RDF0036	Oil Cooler for HP2025 and HP2134 Hydraulic Power Units *Includes high efficiency oil cooler, electric fan, bolted support, hoses, fittings and installation instructions. Recommended for application generating high heat.*	1,816.59
	5RDF0035	SW21 Dust Suppression Kit *Includes 60 gallon water tank, electric pump, nozzles, hoses and fittings, electrical harness with switch and installation instructions. Requires the steel/rubber dust deflector kit.*	1,149.45
	5RDF0033	SW21 Gauge Wheel Kit *Includes two pairs 8 In. diameter by 3.5 In. wide solid wheels, mounting brackets and hardware.*	386.87
	5RDF0034	SW21 Lawn Dethatching Kit *Requires gauge wheel kit, compatible with dust suppression kit.*	377.48
	5RDF0044	SW2172 50/50 Poly/Steel Wafter Brush Replacement Kit *Includes required quantity of wafters to replace entire brush.*	683.16
	5RDF0031	SW2172 Dust Deflector Kit	158.17

SW2172 - 72 In. Hydraulic, 300/400 Series Carrier Loader Mount Rotary Broom with Hydraulic Angle Adjustment and HP2025 Hydraulic Power Unit - Canada

Continued

CODE	ATTACHMENT IDENTIFIER	DESCRIPTION	SUGGESTED LIST PRICE USD ($)
		ATTACHMENTS FOR FIELD CONVERSION ...Continued...	
	5RDF0041	SW2172 Poly Wafter Brush Replacement Kit *Includes required quantity of wafters to replace entire brush.*	683.16
	5RDF0039	Wiring Harness for HP2025 and HP2134 Hydraulic Power Units to control Loader Mounted Attachment *Includes complete wiring harness from switch in the console to 3 cavities connectors for front implements.*	88.55

SW2172 - 72 In. Hydraulic, 300/400 Series Carrier Loader Mount Rotary Broom with Hydraulic Angle Adjustment and HP2025 Hydraulic Power Unit - Canada

Continued

THIS PAGE IS INTENTIONALLY LEFT BLANK

SW2184 - 84 In. Hydraulic, 400 Series Carrier Loader Mount Rotary Broom with Hydraulic Angle Adjustment and HP2143 Hydraulic Power Unit - Canada

Equipment for Base Machine

Function: Sweeping
Working Width: 84 In. (2,133.6 mm)
Working Width at Max Angle: 77 In. (1,955.8 mm)
Transport Width: 96 In. (2,438.4 mm)
Operating Weight: 920 lb. (417.3 kg.)
Standard Bristle Material: Poly, 50/50 Steel/Poly
Available as Replacement
Brush Speed: 160 RPM
Brush Diameter: 32 In. (812.8 mm)
Angle Range: 23 degrees left or right
Hood Thickness: 14 gauge
Side Frame Thickness: 3/16 In. (4.8 mm)
Parking Stands Included
Approximate Set-Up Time: 30 Minutes
Function: Hydraulic Power Unit
Pressure: 2700 psi
Flow: 16 gpm
Reservoir Capacity: 15 gal.
System Capacity: 17 gal.
System Features: Pressure relieve valve, filter, temperature
and oil level gauge, and thermal protection switch
Hoses, Tips, and Brackets included
Tractor RPM: 540 RPM
PTO Manufacturer: Comer
Parking Stand: Standard
Hitch Category: Category I
Quick Hitch Compatibility:
iMatch Compatible
Approximate Set-Up Time: 120 Minutes

CODE	ATTACHMENT IDENTIFIER	DESCRIPTION	SUGGESTED LIST PRICE USD ($)

Select One Code From Each Required Category

BASE MACHINE

159CXF	SW2184 - 84 In. Hydraulic, 400 Series Carrier Loader Mount Rotary Broom with Hydraulic Angle Adjustment and HP2143 Hydraulic Power Unit - Canada *Must only be used with HP2134 Hydraulic Power Pack Unit.*	13,709.64

HYDRAULIC POWER UNITS

1010	HP2134 - Hydraulic Power Unit, 34 HP *Includes wiring harness to control the loader mounted implement.*	In Base Price
1095	Less HP2134 Hydraulic Power Unit	-6,509.64

OIL COOLER

2000	Oil Cooler for HP2025 and HP2134 Hydraulic Power Units *Includes high efficiency oil cooler, electric fan, bolted support, hoses, fittings and installation instructions. Recommended for application generating high heat.* *Not available with option Code 1095.*	In Base Price
2095	Less Oil Cooler	-1,685.28

ATTACHMENTS - ORDER AS DESIRED

	Dust Deflector:	
9000	SW2184 Steel/Rubber Dust Deflector Kit	158.48
	Dust Suppression Kit:	
9010	SW21 Dust Suppression Kit *Includes 60 gallon water tank, electric pump, nozzles, hoses and fittings, electrical harness with switch and installation instructions. Requires the steel/rubber dust deflector kit.*	1,112.92

SW2184 - 84 In. Hydraulic, 400 Series Carrier Loader Mount Rotary Broom with Hydraulic Angle Adjustment and HP2143 Hydraulic Power Unit - Canada

Continued

CODE	ATTACHMENT IDENTIFIER	DESCRIPTION	SUGGESTED LIST PRICE USD ($)
		ATTACHMENTS - ORDER AS DESIRED ...Continued...	
		Gauge Wheel Kit:	
9020		SW21 Gauge Wheel Kit *Includes two pairs 8 In. diameter by 3.5 In. wide solid wheels, mounting brackets and hardware.*	374.62
		Lawn Dethatching Kit:	
9030		SW21 Lawn Dethatching Kit *Includes support components, hardware and installation instruction. Gauge wheel kit required. Compatible with dust suppression kit.*	365.48
9040		Additional Wiring Harness for HP2025 and HP2134 Hydraulic Power Units for Open Operator Station Tractors *Includes complete wiring harness from battery to switch in the console.* *Not available with option Code 1095.*	93.40
		ATTACHMENTS FOR FIELD CONVERSION	
		Miscellaneous:	
	5RDF0038	Additional Wiring Harness for HP2025 and HP2134 Hydraulic Power Units for Open Operator Station Tractors *Includes complete wiring harness from battery to switch in the console.*	100.04
	5RDF0037	Hydraulic Power Unit Cooler Upgrade (HP2134) *Includes complete cooling unit and thermal by-pass manifold. Bolted support for manifold, hoses, fittings, wiring harness and installation instructions. Only for first year power units sold together with a SB2176. Recommended for application generating high heat.*	2,505.58
	5RDF0036	Oil Cooler for HP2025 and HP2134 Hydraulic Power Units *Includes high efficiency oil cooler, electric fan, bolted support, hoses, fittings and installation instructions. Recommended for application generating high heat.*	1,816.59
	5RDF0035	SW21 Dust Suppression Kit *Includes 60 gallon water tank, electric pump, nozzles, hoses and fittings, electrical harness with switch and installation instructions. Requires the steel/rubber dust deflector kit.*	1,149.45
	5RDF0033	SW21 Gauge Wheel Kit *Includes two pairs 8 In. diameter by 3.5 In. wide solid wheels, mounting brackets and hardware.*	386.87
	5RDF0034	SW21 Lawn Dethatching Kit *Requires gauge wheel kit, compatible with dust suppression kit.*	377.48
	5RDF0045	SW2184 50/50 Poly/Steel Wafter Brush Replacement Kit *Includes required quantity of wafters to replace entire brush.*	799.61
	5RDF0032	SW2184 Dust Deflector Kit	163.68
	5RDF0042	SW2184 Poly Wafter Brush Replacement Kit *Includes required quantity of wafters to replace entire brush.*	797.67

SW2184 - 84 In. Hydraulic, 400 Series Carrier Loader Mount Rotary Broom with Hydraulic Angle Adjustment and HP2143 Hydraulic Power Unit - Canada

Continued

CODE	ATTACHMENT IDENTIFIER	DESCRIPTION	SUGGESTED LIST PRICE USD ($)
		ATTACHMENTS FOR FIELD CONVERSION ...Continued...	
	5RDF0039	Wiring Harness for HP2025 and HP2134 Hydraulic Power Units to control Loader Mounted Attachment *Includes complete wiring harness from switch in the console to 3 cavities connectors for front implements.*	88.55

SW2184 - 84 In. Hydraulic, 400 Series Carrier Loader Mount Rotary Broom with Hydraulic Angle Adjustment and HP2143 Hydraulic Power Unit - Canada

Continued

THIS PAGE IS INTENTIONALLY LEFT BLANK

RT1142 - 42 In. Standard Duty Rotary Tiller

Equipment for Base Machine

Working Width:
42 In. (1,066.8 mm)
Tractor PTO Speed: 540 RPM
Tractor PTO HP (Minimum): 10 HP (7.5 kW)
Tractor PTO HP (Minimum): 25 HP (18.6 kW)
Blade Shape: C
Skid Shoes: Adjustable
Rear Door Support: Chain
Parking Stand Included
Gearbox Speed: Single
Rotor Speed: 254 RPM
Rotor Flanges: 5
Drive Chain: ASA 80
Blades/Rotor: 4
Adjustable Offset:
4 In. (101.6 mm)

Max Working Depth:
6.3 In. (160 mm)
Outside to Outside Width:
46 In. (1,168.4 mm)
Driveline Protection: Shear Bolt
Tillage Depth Control: Skid Shoes
Hitch:
Category I, iMatch Compatible
Frame: Heavy Duty Single Layer

CODE	ATTACHMENT IDENTIFIER	DESCRIPTION	SUGGESTED LIST PRICE USD ($)
		Select One Code From Each Required Category	
		BASE MACHINE	
1357XF		RT1142 - 42 In. Standard Duty Rotary Tiller	2,208.00
		ATTACHMENTS FOR FIELD CONVERSION	
		Miscellaneous:	
	5MHF20020375	French Kit - For RT1142, RT1149, RT1157, RT1165. and RT1265 *Includes Operators Manual, Parts Catalog, and Safety Decals.*	32.30

RT1142 - 42 In. Standard Duty Rotary Tiller
Continued

THIS PAGE IS INTENTIONALLY LEFT BLANK

RT1149 - 49 In. Standard Duty Rotary Tiller

Equipment for Base Machine

Working Width:
49 In. (1,244.6 mm)
Tractor PTO Speed: 540 RPM
Tractor PTO HP (Minimum): 20 HP (14.9 kW)
Tractor PTO HP (Minimum): 25 HP (18.6 kW)
Blade Shape: C
Skid Shoes: Adjustable
Rear Door Support: Chain
Parking Stand Included
Gearbox Speed: Single
Rotor Speed: 208 RPM
Rotor Flanges: 6
Drive Chain: ASA 80
Blades/Rotor: 4
Adjustable Offset:
8 In. (203.2 mm)

Max Working Depth:
6.3 In. (160 mm)
Outside to Outside Width:
54 In. (1,371.6 mm)
Driveline Protection: Friction Clutch
Tillage Depth Control: Skid Shoes
Hitch:
Category I, iMatch Compatible
Frame: Heavy Duty Single Layer

CODE	ATTACHMENT IDENTIFIER	DESCRIPTION	SUGGESTED LIST PRICE USD ($)

Select One Code From Each Required Category

BASE MACHINE

1358XF	RT1149 - 49 In. Standard Duty Rotary Tiller	2,358.00

ATTACHMENTS FOR FIELD CONVERSION

Miscellaneous:

5MHF20020375	French Kit - For RT1142, RT1149, RT1157, RT1165. and RT1265 *Includes Operators Manual, Parts Catalog, and Safety Decals.*	32.30

RT1149 - 49 In. Standard Duty Rotary Tiller
Continued

THIS PAGE IS INTENTIONALLY LEFT BLANK

RT1157 - 57 In. Standard Duty Rotary Tiller

Equipment for Base Machine

Working Width:
57 In. (1,447.8 mm)
Tractor PTO Speed: 540 RPM
Tractor PTO HP (Minimum): 25 HP (18.6 kW)
Tractor PTO HP (Maximum): 40 HP (29.8 kW)
Blade Shape: C
Skid Shoes: Adjustable
Rear Door Support: Chain
Parking Stand Included
Gearbox Speed: Single
Rotor Speed: 208 RPM
Rotor Flanges: 7
Drive Chain: ASA 80
Blades/Rotor: 6
Adjustable Offset:
19 In. (482.6 mm)
Max Working Depth:
7.0 In. (177.8 mm)
Outside to Outside Width:
62 In. (1,574.8 mm)
Driveline Protection: Friction Clutch
Tillage Depth Control: Skid Shoes
Hitch:
Category I or II, iMatch and
Quick Coupler Compatible
Frame:
Heavy Duty and Bent Frame with
Extra Thickness Above Rotor

CODE	ATTACHMENT IDENTIFIER	DESCRIPTION	SUGGESTED LIST PRICE USD ($)

Select One Code From Each Required Category

BASE MACHINE

1359XF		RT1157 - 57 In. Standard Duty Rotary Tiller	2,920.00

ATTACHMENTS FOR FIELD CONVERSION

Miscellaneous:

	5MHF20020375	French Kit - For RT1142, RT1149, RT1157, RT1165. and RT1265 *Includes Operators Manual, Parts Catalog, and Safety Decals.*	32.30

RT1157 - 57 In. Standard Duty Rotary Tiller
Continued

THIS PAGE IS INTENTIONALLY LEFT BLANK

RT1165 - 65 In. Standard Duty Rotary Tiller

Equipment for Base Machine

Working Width:
65 In. (1,651 mm)
Tractor PTO Speed: 540 RPM
Tractor PTO HP (Minimum): 30 HP (22.4 kW)
Tractor PTO HP (Maximum): 40 HP (29.8 kW)
Blade Shape: C
Skid Shoes: Adjustable
Rear Door Support: Chain
Parking Stand Included
Gearbox Speed: Single
Rotor Speed: 208 RPM
Rotor Flanges: 8
Drive Chain: ASA 80
Blades/Rotor: 6
Adjustable Offset:
23 In. (584.2 mm)
Max Working Depth:
7.0 In. (177.8 mm)
Outside to Outside Width:
70 In. (1,778 mm)
Driveline Protection: Friction Clutch
Tillage Depth Control: Skid Shoes
Hitch:
Category I or II, iMatch and
Quick Coupler Compatible
Frame:
Heavy Duty and Bent Frame with
Extra Thickness Above Rotor

CODE	ATTACHMENT IDENTIFIER	DESCRIPTION	SUGGESTED LIST PRICE USD ($)

Select One Code From Each Required Category

BASE MACHINE

135AXF	RT1165 - 65 In. Standard Duty Rotary Tiller	3,465.00

ATTACHMENTS FOR FIELD CONVERSION

Miscellaneous:

5MHF20020375	French Kit - For RT1142, RT1149, RT1157, RT1165. and RT1265 *Includes Operators Manual, Parts Catalog, and Safety Decals.*	32.30

RT1165 - 65 In. Standard Duty Rotary Tiller
Continued

THIS PAGE IS INTENTIONALLY LEFT BLANK

RT1173 - 73 In. Standard Duty Rotary Tiller

Equipment for Base Machine

Working Width:
73 In. (1,854.2 mm)
Tractor PTO Speed: 540 RPM
Tractor PTO HP (Minimum): 45 HP (33.6 kW)
Tractor PTO HP (Maximum): 60 HP (44.7 kW)
Blade Shape: C
Skid Shoes: Adjustable
Rear Door Support: Chain
Parking Stand Included
Gearbox Speed: Single
Rotor Speed: 228 RPM
Rotor Flanges: 10
Drive Chain: ASA 100
Blades/Rotor: 6
Adjustable Lower Hitches
Max Working Depth:
8.7 In. (221 mm)
Outside to Outside Width:
78 In. (1,981.2 mm)
Driveline Protection: Friction Clutch
Tillage Depth Control: Skid Shoes
Hitch:
Category II, Quick Coupler Compatible
Frame:
Heavy Duty and Bent Frame with
Extra Thickness Above Rotor

CODE	ATTACHMENT IDENTIFIER	DESCRIPTION	SUGGESTED LIST PRICE USD ($)

Select One Code From Each Required Category

BASE MACHINE

135BXF	RT1173 - 73 In. Standard Duty Rotary Tiller	4,426.00

ATTACHMENTS FOR FIELD CONVERSION

Miscellaneous:

MHF20020376	French Kit - For RT1173, RT1181, RT2283, RT2283C, RT1273, and RT2293 *Includes Operators Manual, Parts Catalog, and Safety Decals.*	45.04

RT1173 - 73 In. Standard Duty Rotary Tiller
Continued

THIS PAGE IS INTENTIONALLY LEFT BLANK

RT1181 - 81 In. Standard Duty Rotary Tiller

Equipment for Base Machine

Working Width:
81 In. (2,057.4 mm)
Tractor PTO Speed: 540 RPM
Tractor PTO HP (Minimum): 50 HP (37.3 kW)
Tractor PTO HP (Maximum): 60 HP (44.7kW)
Blade Shape: C
Skid Shoes: Adjustable
Parking Stand Included
Gearbox Speed: Single
Rotor Speed: 228 RPM
Rotor Flanges: 11
Drive Chain: 100 ASA
Blades/Rotor: 6
Rear Door Support: Chain

Max Working Depth:
7.9 In. (200.7 mm)
Outside to Outside Width:
86 In. (2,184.4 mm)
Driveline Protection: Friction Disc
Tillage Depth Control: Skid Shoes
Hitch:
Category II, Quick Coupler Compatible

CODE	ATTACHMENT IDENTIFIER	DESCRIPTION	SUGGESTED LIST PRICE USD ($)

Select One Code From Each Required Category

BASE MACHINE

135CXF		RT1181 - 81 In. Standard Duty Rotary Tiller	4,896.00

ATTACHMENTS FOR FIELD CONVERSION

Miscellaneous:

	MHF20020376	French Kit - For RT1173, RT1181, RT2283, RT2283C, RT1273, and RT2293 *Includes Operators Manual, Parts Catalog, and Safety Decals.*	45.04

RT1181 - 81 In. Standard Duty Rotary Tiller
Continued

THIS PAGE IS INTENTIONALLY LEFT BLANK

RT1265 - 65 In. Medium Duty Rotary Tiller

Equipment for Base Machine

Working Width:
65 In. (165 cm)
Tractor PTO Speed: 540 RPM
Tractor PTO HP (Minimum):
30 HP (22 kW)
Tractor PTO HP (Maximum):
60 HP (44 kW)
Blade Shape: L
Skid Shoes: Adjustable
Rear Door Support: Chain
Parking Stand Included
Gearbox Speed: Single
Rotor Speed: 208 RPM
Rotor Flanges: 8
Blades/Rotor: 6
Max Working Depth:
7.9 In. (20 cm)
Outside to Outside Width:
70 In. (178 cm)
Driveline Protection: Friction Clutch
Tillage Depth Control: Skid Shoes
Hitch: Category I or II, iMatch
and Quick Coupler Compatible
Frame:
Heavy Duty and Bent Frame with
Extra Thickness Above Rotor

CODE	ATTACHMENT IDENTIFIER	DESCRIPTION	SUGGESTED LIST PRICE USD ($)
		Select One Code From Each Required Category	
		BASE MACHINE	
136AXF		RT1265 - 65 In. Medium Duty Rotary Tiller *Skid shoes in base. No Roller Option.*	3,916.00
		ATTACHMENTS FOR FIELD CONVERSION	
		Miscellaneous:	
	5MHF20020375	French Kit - For RT1142, RT1149, RT1157, RT1165. and RT1265 *Includes Operators Manual, Parts Catalog, and Safety Decals.*	32.30

RT1265 - 65 In. Medium Duty Rotary Tiller
Continued

THIS PAGE IS INTENTIONALLY LEFT BLANK

RT1273 - 73 In. Medium Duty Rotary Tiller

Equipment for Base Machine

Working Width:
73 In. (185 cm)
Tractor PTO speed: 540 RPM
Tractor PTO HP (Minimum):
30 HP (22 kW)
Tractor PTO HP (Maximum):
80 HP (59 kW)
Blade Shape: L
Skid Shoes: Adjustable
Side Drive: Gear
Rear Door Support: Chain
Parking Stand Included
Gearbox Speed: Single
Rotor Speed: 213 RPM
Rotor Flanges: 8
Blades/Rotor: 6
Adjustable Lower Hitches
Max Working Depth:
8.7 In. (22 cm)

Outside to Outside Width:
77 In. (196 cm)
Driveline Protection:
Friction Clutch
Tillage Depth Control:
Skid Shoes
Hitch: Category II,
Quick Coupler Compatible
Frame:
Double-Wall Frame Construction
Above Rotor for Strength and
Rock Protection

CODE	ATTACHMENT IDENTIFIER	DESCRIPTION	SUGGESTED LIST PRICE USD ($)

Select One Code From Each Required Category

BASE MACHINE

136BXF		RT1273 - 73 In. Medium Duty Rotary Tiller *Skid shoes in base. No Roller Option.*	6,295.00

ATTACHMENTS FOR FIELD CONVERSION

		Miscellaneous:	
	MHF20020376	French Kit - For RT1173, RT1181, RT2283, RT2283C, RT1273, and RT2293 *Includes Operators Manual, Parts Catalog, and Safety Decals.*	45.04

RT1273 - 73 In. Medium Duty Rotary Tiller
Continued

THIS PAGE IS INTENTIONALLY LEFT BLANK

RT2283 - 83 In. Medium Duty Rotary Tiller

Equipment for Base Machine

Working Width:
83 In. (210 cm)
Tractor PTO Speed: 540 RPM
Tractor PTO HP (Minimum):
60 HP (44kW)
Tractor PTO HP (Maximum):
100 HP (74 kW)
Blade Shape: L
Skid Shoes: Adjustable
Side Drive: Gear
Rear Door Support: Chain
Parking Stand Included
Gearbox Speed: Multi
Rotor Speed: 140-714-215
(Factory Setting)-266 RPM
Rotor Flanges: 9
Blades/Rotor: 6
Adjustable Lower Hitches
Max Working Depth:
10.6 In. (27 cm)
Outside to Outside Width:
88 In. (224 cm)
Driveline Protection: Friction Clutch
Tillage Depth Control: Skid Shoes,
Cage Roller Optional
Hitch: Category II,
Quick Coupler Compatible
Frame:
Double-Wall Frame Construction
Above Rotor for Strength and
Rock Protection

CODE	ATTACHMENT IDENTIFIER	DESCRIPTION	SUGGESTED LIST PRICE USD ($)

Select One Code From Each Required Category

BASE MACHINE

1671XF		RT2283 - 83 In. Medium Duty Rotary Tiller *Skid shoes in base. Roller Optional.*	8,171.00

TILLAGE DEPTH CONTROL

1000		Skid Shoe	In Base Price
1010		Cage Roller Manual Adjustment	1,907.00
1020		Cage Roller Hydraulic Adjustment	2,106.00

ATTACHMENTS - ORDER AS DESIRED

8000		Right Disc *For RT22, RT23, and RC22 Series. Also for RT310R.*	756.00
8010		Left Disc *For RT22, RT23, and RC22 Series. Also for RT310R.*	756.00

ATTACHMENTS FOR FIELD CONVERSION

		Miscellaneous:	
	MHF20020376	French Kit - For RT1173, RT1181, RT2283, RT2283C, RT1273, and RT2293 *Includes Operators Manual, Parts Catalog, and Safety Decals.*	45.04
	5MH99500264	Left Disc (RT22, RT23, RC22 Series and Also RT1310R)	756.00
	5MH99500263	Right Disc (RT22, RT23, RC22 Series and Also RT1310R)	756.00

RT2283 - 83 In. Medium Duty Rotary Tiller
Continued

THIS PAGE IS INTENTIONALLY LEFT BLANK

RT2293 - 93 In. Medium Duty Rotary Tiller

Equipment for Base Machine

Working Width:
93 In. (235 cm)
Tractor PTO Speed: 540 RPM
Tractor PTO HP (Minimum):
70 HP (52 kW)
Tractor PTO HP (Maximum):
100 HP (74 kW)
Blade Shape: L
Skid Shoes: Adjustable
Side Drive: Gear
Rear Door Support: Chain
Parking Stand Included
Gearbox Speed: Multi
Rotor Speed: 140-174-215
(Factory Setting)-266 RPM
Rotor Flanges: 10
Blades/Rotor: 6
Adjustable Lower Hitches
Max Working Depth:
10.6 In. (27 cm)
Outside to Outside Width:
98 In. (249 cm)
Driveline Protection: Friction Clutch
Tillage Depth Control: Skid Shoes,
Cage Roller Optional
Hitch: Category II,
Quick Coupler Compatible
Frame:
Double-Wall Frame Construction
Above Rotor for Strength and
Rock Protection

CODE	ATTACHMENT IDENTIFIER	DESCRIPTION	SUGGESTED LIST PRICE USD ($)

Select One Code From Each Required Category

BASE MACHINE

1672XF		RT2293 - 93 In. Medium Duty Rotary Tiller *Skid shoes in base. Roller Optional.*	8,496.00

TILLAGE DEPTH CONTROL

1000		Skid Shoe	In Base Price
1010		Cage Roller Manual Adjustment	2,240.00
1020		Cage Roller Hydraulic Adjustment	2,439.00

ATTACHMENTS - ORDER AS DESIRED

8000		Right Disc *For RT22, RT23, and RC22 Series. Also for RT310R.*	756.00
8010		Left Disc *For RT22, RT23, and RC22 Series. Also for RT310R.*	756.00

ATTACHMENTS FOR FIELD CONVERSION

		Miscellaneous:	
	MHF20020376	French Kit - For RT1173, RT1181, RT2283, RT2283C, RT1273, and RT2293 *Includes Operators Manual, Parts Catalog, and Safety Decals.*	45.04
	5MH99500264	Left Disc (RT22, RT23, RC22 Series and Also RT1310R)	756.00
	5MH99500263	Right Disc (RT22, RT23, RC22 Series and Also RT1310R)	756.00

RT2293 - 93 In. Medium Duty Rotary Tiller
Continued

THIS PAGE IS INTENTIONALLY LEFT BLANK

RT2383 - 82 In. Heavy Duty Rotary Tiller

Equipment for Base Machine

Working Width:
82 In. (208 cm)
Tractor PTO Speed: 540 RPM
Tractor PTO HP (Minimum):
60 HP (44 kW)
Tractor PTO HP (Maximum):
130 HP (96 kW)
Blade Shape: L
Skid Shoes: Adjustable
Side Drive: Gear
Rear Door Support:
Metal Rod with Double Spring
Parking Stand Included
Gearbox Speed: Multi
Rotor Speed:
175-214-262 (Factory Setting)-143 RPM
Rotor Flanges: 9
Blades/Rotor: 6
Max Working Depth:
10.6 In. (27 cm)
Outside to Outside Width:
88 In. (224 cm)
Driveline Protection: Friction Clutch
Tillage Depth Control: Skid Shoes,
Cage Roller Optional
Hitch: Category II,
Quick Coupler Compatible
Frame:
Double-Wall Frame Construction
Above Rotor for Strength and
Rock Protection

CODE	ATTACHMENT IDENTIFIER	DESCRIPTION	SUGGESTED LIST PRICE USD ($)

Select One Code From Each Required Category

BASE MACHINE

1683XF		RT2383 - 82 In. Heavy Duty Rotary Tiller	9,318.00

TILLAGE DEPTH CONTROL

1000		Skid Shoe	In Base Price
1010		Cage Roller Manual Adjustment	1,907.00
1020		Cage Roller Hydraulic Adjustment	2,106.00

ATTACHMENTS - ORDER AS DESIRED

8000		Right Disc *For RT22, RT23, and RC22 Series. Also for RT310R.*	756.00
8010		Left Disc *For RT22, RT23, and RC22 Series. Also for RT310R.*	756.00

ATTACHMENTS FOR FIELD CONVERSION

		Miscellaneous:	
	MHF20020454	French Kit - For RT2308, RT2383, and RT2310 *Includes Operators Manual, Parts Catalog, and Safety Decals.*	45.04
	5MH99500264	Left Disc (RT22, RT23, RC22 Series and Also RT1310R)	756.00
	5MH99500263	Right Disc (RT22, RT23, RC22 Series and Also RT1310R)	756.00

RT2383 - 82 In. Heavy Duty Rotary Tiller
Continued

THIS PAGE IS INTENTIONALLY LEFT BLANK

RT2308 - 102 In. Heavy Duty Rotary Tiller

Equipment for Base Machine

Working Width:
102 In. (260 cm)
Tractor PTO Speed: 540 RPM
Tractor PTO HP (Minimum):
80 HP (59 kW)
Tractor PTO HP (Maximum):
130 HP (96 kW)
Blade Shape: L
Skid Shoes: Adjustable
Side Drive: Gear
Rear Door Support:
Metal Rod with Double Spring
Parking Stand Included
Gearbox Speed: Multi
Rotor Speed: 175-214-262
(Factory Setting)-143 RPM
Rotor Flanges: 11
Blades/Rotor: 6
Max Working Depth:
10.6 In. (27 cm)
Outside to Outside Width:
108 In. (274 cm)
Driveline Protection: Friction Clutch
Tillage Depth Control: Skid Shoes,
Cage Roller Optional
Hitch: Category II,
Quick Coupler Compatible
Frame:
Double-Wall Frame Construction
Above Rotor for Strength and
Rock Protection

CODE	ATTACHMENT IDENTIFIER	DESCRIPTION	SUGGESTED LIST PRICE USD ($)

Select One Code From Each Required Category

BASE MACHINE

1681XF		RT2308 - 102 In. Heavy Duty Rotary Tiller *Skid shoes in base. Roller Optional.*	10,362.00

TILLAGE DEPTH CONTROL

1000		Skid Shoe	In Base Price
1010		Cage Roller Manual Adjustment	2,240.00
1020		Cage Roller Hydraulic Adjustment	2,439.00

ATTACHMENTS - ORDER AS DESIRED

8000		Right Disc *For RT22, RT23, and RC22 Series. Also for RT310R.*	756.00
8010		Left Disc *For RT22, RT23, and RC22 Series. Also for RT310R.*	756.00
8020		Rotor Flange Reinforcement Kit	740.00

ATTACHMENTS FOR FIELD CONVERSION

		Miscellaneous:	
	MHF20020454	French Kit - For RT2308, RT2383, and RT2310 *Includes Operators Manual, Parts Catalog, and Safety Decals.*	45.04
	5MH99500264	Left Disc (RT22, RT23, RC22 Series and Also RT1310R)	756.00
	5MH99500263	Right Disc (RT22, RT23, RC22 Series and Also RT1310R)	756.00

RT2308 - 102 In. Heavy Duty Rotary Tiller
Continued

CODE	ATTACHMENT IDENTIFIER	DESCRIPTION	SUGGESTED LIST PRICE USD ($)
		ATTACHMENTS FOR FIELD CONVERSION ...Continued...	
	5MH99525575	Rotor Flange Reinforcement Kit (RT2308)	740.00

RT2310 - 121 In. Heavy Duty Rotary Tiller

Equipment for Base Machine

Working Width:
121 In. (310 cm)
Tractor PTO Speed: 540 RPM
Tractor PTO HP (Minimum):
100 HP (75 kW)
Tractor PTO HP (Maximum):
130 HP (96 kW)
Blade Shape: L
Skid Shoes: Adjustable
Side Drive: Gear
Rear Door Support:
Metal Rod with Double Spring
Parking Stand Included
Gearbox Speed: Multi
Rotor Speed: 175-214-262
(Factory Setting)-143 RPM
Rotor Flanges: 13
Blades/Rotor: 6
Max Working Depth:
10.6 In. (27 cm)
Outside to Outside Width:
128 In. (325 cm)
Driveline Protection: Friction Clutch
Tillage Depth Control: Skid Shoes,
Cage Roller Optional
Hitch: Category II,
Quick Coupler Compatible
Frame:
Double-Wall Frame Construction
Above Rotor for Strength and
Rock Protection

CODE	ATTACHMENT IDENTIFIER	DESCRIPTION	SUGGESTED LIST PRICE USD ($)

Select One Code From Each Required Category

BASE MACHINE

1682XF		RT2310 - 121 In. Heavy Duty Rotary Tiller *Skid shoes in base. Roller Optional.*	11,730.00

TILLAGE DEPTH CONTROL

1000		Skid Shoe	In Base Price
1010		Cage Roller Manual Adjustment	2,526.00
1020		Cage Roller Hydraulic Adjustment	2,726.00

ATTACHMENTS - ORDER AS DESIRED

8000		Right Disc *For RT22, RT23, and RC22 Series. Also for RT310R.*	756.00
8010		Left Disc *For RT22, RT23, and RC22 Series. Also for RT310R.*	756.00
8020		Rotor Flange Reinforcement Kit	888.00

ATTACHMENTS FOR FIELD CONVERSION

		Miscellaneous:	
	MHF20020454	French Kit - For RT2308, RT2383, and RT2310 *Includes Operators Manual, Parts Catalog, and Safety Decals.*	45.04
	5MH99500264	Left Disc (RT22, RT23, RC22 Series and Also RT1310R)	756.00
	5MH99500263	Right Disc (RT22, RT23, RC22 Series and Also RT1310R)	756.00

RT2310 - 121 In. Heavy Duty Rotary Tiller
Continued

SP2048B - 4 Ft. Standard Duty Soil Pulverizer - Bar Type

Equipment for Base Machine

```
3-Point Hitch: Category I
Working Width: 48 In.
Tractor HP (Maximum): 30 to 45 HP
Approximate Shipping Weight: 550 lbs.
Scarifying Teeth - Rear:
  (8) 1/2 In x 2 In.  Bar Type
Scarifying Teeth - Front:
  (9)  1/2 In. x 2 In.  Bar Type
Roller Pins: 70
Roller Pin Size: 3/8 In. x 1 In.
Roller Diameter: 5-9/16 In.
Height: 39 In.
H-Beam Dimensions: 10 In. x 10 In.
Duty: Standard Duty
Compression Springs: (2) 160 lbs.
Assembly/Set-Up Time:
  10 Minutes (Approximate)
Approximate Operating Weight: 496 lbs.
2nd Roller Assembly 48 In.: Optional
```

CODE	ATTACHMENT IDENTIFIER	DESCRIPTION	SUGGESTED LIST PRICE USD ($)
		Select One Code From Each Required Category	
		BASE MACHINE	
1401XF		SP2048B - 4 Ft. Standard Duty Soil Pulverizer - Bar Type	1,917.00
		ATTACHMENTS ORDER AS DESIRED	
9000		Second Roller Assembly (SP2048B) *5 In. diameter.*	360.00
		ATTACHMENTS FOR FIELD CONVERSION	
		Miscellaneous:	
	5BP0099887	Second Roller Assembly (SP2048B) *5 In. diameter.*	360.00

SP2048B - 4 Ft. Standard Duty Soil Pulverizer - Bar Type
Continued

THIS PAGE IS INTENTIONALLY LEFT BLANK

SP2060B - 5 Ft. Standard Duty Soil Pulverizer - Bar Type

Equipment for Base Machine

3-Point Hitch: Category I
Working Width: 60 In.
Tractor HP (Maximum): 30 to 45 HP
Approximate Shipping Weight: 702 lbs.
Scarifying Teeth - Rear:
(10) 1/2 In. x 2 In. Bar Type
Scarifying Teeth - Front:
(11) 1/2 In. x 2 In. Bar Type
Roller Pins: 88
Roller Pin Size: 3/8 In. x 1 In.
Roller Diameter: 5-9/16 In.
Height: 39 In.
H-Beam Dimensions: 10 In. x 10 In.

Duty: Standard Duty
Compression Springs: (2) 160 lbs.
Assembly/Set-Up Time:
10 Minutes (Approximate)
Approximate Operating Weight: 652 lbs.
2nd Roller Assembly 60 In.: Optional

CODE	ATTACHMENT IDENTIFIER	DESCRIPTION	SUGGESTED LIST PRICE USD ($)
		Select One Code From Each Required Category	
		BASE MACHINE	
1403XF		SP2060B - 5 Ft. Standard Duty Soil Pulverizer - Bar Type	2,018.00
		ATTACHMENTS ORDER AS DESIRED	
9000		Second Roller Assembly (SP2060B) *5 In. diameter.*	448.00
		ATTACHMENTS FOR FIELD CONVERSION	
		Miscellaneous:	
	5BP0099636	Second Roller Assembly (SP2060B) *5 In. diameter.*	448.00

SP2060B - 5 Ft. Standard Duty Soil Pulverizer - Bar Type
Continued

THIS PAGE IS INTENTIONALLY LEFT BLANK

SP2072B - 6 Ft. Standard Duty Soil Pulverizer - Bar Type

Equipment for Base Machine

```
3-Point Hitch: Category I
Working Width: 72 In.
Tractor HP (Maximum): 30 to 45 HP
Approximate Shipping Weight: 729 lbs.
Scarifying Teeth - Rear:
  (12) 1/2 In. x 2 In.  Bar Type
Scarifying Teeth - Front:
  (13)  1/2 In. x 2 In.  Bar Type
Roller Pins: 106
Roller Pin Size: 3/8 In. x 1 In.
Roller Diameter: 5-9/16 In.
Height: 39 In.
H-Beam Dimensions: 10 In. x 10 In.
Duty: Standard Duty
Compression Springs: (2) 160 lbs.
Assembly/Set-Up Time:
  10 Minutes (Approximate)
Approximate Operating Weight: 679 lbs.
2nd Roller Assembly 72 In.: Optional
```

CODE	ATTACHMENT IDENTIFIER	DESCRIPTION	SUGGESTED LIST PRICE USD ($)
		Select One Code From Each Required Category	
		BASE MACHINE	
1402XF		SP2072B - 6 Ft. Standard Duty Soil Pulverizer - Bar Type	2,221.00
		ATTACHMENTS ORDER AS DESIRED	
9000		Second Roller Assembly (SP2072B) *5 In. diameter.*	636.00
		ATTACHMENTS FOR FIELD CONVERSION	
		Miscellaneous:	
	5BP0099637	Second Roller Assembly (SP2072B) *5 In. diameter.*	636.00

SP2072B - 6 Ft. Standard Duty Soil Pulverizer - Bar Type
Continued

THIS PAGE IS INTENTIONALLY LEFT BLANK

SP2272B - 6 Ft. Heavy Duty Soil Pulverizer - Bar Type

Equipment for Base Machine

3-Point Hitch: Category I
Working Width: 72 In.
Tractor HP (Maximum): 30 to 70 HP
Shipping Weight: 846 lbs.
Scarifying Teeth - Rear:
(12) 1/2 In. x 2 In. Bar Type
Scarifying Teeth - Front:
(13) 1/2 In. x 2 In. Bar Type
Roller Pins: 106
Roller Pin Size: 3/8 In. x 1 In.
Roller Diameter: 6-5/8 In.
Height: 39 In.
H-Beam Dimensions: 12 In. x 11.5 In.

Duty: Heavy Duty
Compression Springs: (2) 160 lbs.
Assembly/Set-Up Time:
10 Minutes (Approximate)
Approximate Operating Weight: 781 lbs.
2nd Roller Assembly 72 In.: Optional

CODE	ATTACHMENT IDENTIFIER	DESCRIPTION	SUGGESTED LIST PRICE USD ($)
		Select One Code From Each Required Category	
		BASE MACHINE	
1411XF		SP2272B - 6 Ft. Heavy Duty Soil Pulverizer - Bar Type	2,766.00
		ATTACHMENTS ORDER AS DESIRED	
9000		Second Roller Assembly (SP2272B) *5-9/16 In. diameter.*	809.00
		ATTACHMENTS FOR FIELD CONVERSION	
		Miscellaneous:	
	5BP0099646	Second Roller Assembly (SP2272B) *5-9/16 In. diameter.*	809.00

SP2272B - 6 Ft. Heavy Duty Soil Pulverizer - Bar Type
Continued

THIS PAGE IS INTENTIONALLY LEFT BLANK

SP2284B - 7 Ft. Heavy Duty Soil Pulverizer - Bar Type

Equipment for Base Machine

3-Point Hitch: Category I
Working Width: 84 In.
Tractor HP (Maximum): 30 to 70 HP
Shipping Weight: 940 lbs.
Scarifying Teeth - Rear:
(14) 1/2 In. x 2 In. Bar Type
Scarifying Teeth - Front:
(15) 1/2 In. x 2 In. Bar Type
Roller Pins: 124
Roller Pin Size: 3/8 In. x 1 In.
Roller Diameter: 6-5/8 In.
Height: 39 In.
H-Beam Dimensions: 12 In. x 11.5 In.

Duty: Heavy Duty
Compression Springs: (2) 160 lbs.
Assembly/Set-Up Time:
10 Minutes (Approximate)
Approximate Operating Weight: 875 lbs.
2nd Roller Assembly 84 In.: Optional

CODE	ATTACHMENT IDENTIFIER	DESCRIPTION	SUGGESTED LIST PRICE USD ($)
		Select One Code From Each Required Category	
		BASE MACHINE	
1412XF		SP2284B - 7 Ft. Heavy Duty Soil Pulverizer - Bar Type	2,963.00
		ATTACHMENTS ORDER AS DESIRED	
9000		Second Roller Assembly (SP2284B) *5-9/16 In. diameter.*	867.00
		ATTACHMENTS FOR FIELD CONVERSION	
		Miscellaneous:	
	5BP0099647	Second Roller Assembly (SP2284B) *5-9/16 In. diameter.*	867.00

SP2284B - 7 Ft. Heavy Duty Soil Pulverizer - Bar Type
Continued

THIS PAGE IS INTENTIONALLY LEFT BLANK

SS1022B Broadcast Spreader - Pull Type Hitch

Equipment for Base Machine

Hopper Material: Steel
Hopper Weight Capacity: 226 lbs.
Hopper Volume Capacity: 3.5 Cubic Ft.
Machine Weight: 62 lbs.
Shipping Weight (Per Pair): 200 lbs.
Swath Spread: 20 Ft.
Hopper Width: 32 In.
Hopper Height: 39.6 In.
Tractor PTO HP Range: 16-30 HP
PTO RPM: NA (Ground Driven)
PTO Shaft Category (Heavy Duty Shielded 1-3/8 In.): NA (Ground Driven)
3-Point Hitch Category: NA (Single Point Hitch)
iMatch Compatible (Note: Must be Ordered from Factory as iMatch): NA (Single Point Hitch)

CODE	ATTACHMENT IDENTIFIER	DESCRIPTION	SUGGESTED LIST PRICE USD ($)

Select One Code From Each Required Category

BASE MACHINE

3061XF		SS1022B Broadcast Spreader - Pull Type Hitch *226 lb. capacity. Order in multiples of two.*	729.00

ATTACHMENTS ORDER AS DESIRED

9010		Hopper Cover (SS1022B and SS1023B)	232.00
9070		Deflector Shield (SS1022B and SS1035B)	91.00
9080		Remote Gate Control (SS1022B, SS1023B and SS1035B)	330.00

ATTACHMENTS FOR FIELD CONVERSION

		Miscellaneous:	
	5BPAA1120	Deflector Shield (SS1022B/SS1035B)	91.15
	5BP0099720	Hopper Cover (SS1022B/SS1023B)	232.41
	5BP0099856	Remote Gate Control (SS1022B/SS1023B/SS1035B)	330.66

THIS PAGE IS INTENTIONALLY LEFT BLANK

SS1023B Broadcast Spreader - 3-Point PTO Category I Non-iMatch

Equipment for Base Machine

Hopper Material: Steel
Hopper Weight Capacity: 226 lbs.
Hopper Volume Capacity: 3.5 Cubic Ft.
Machine Weight: 81 lbs.
Shipping Weight (Per Pair): 232 lbs.
Swath Spread: 23 Ft.
Hopper Width: 32 In.
Hopper Height: 31 In.
Tractor PTO HP Range: 16-30 HP
PTO RPM: 540 RPM
PTO Shaft Category I (Heavy Duty Shielded 1-3/8 In.)
Three Point Hitch: Category 0 and I
iMatch Compatible (Note: Must be Ordered from Factory as iMatch): No

CODE	ATTACHMENT IDENTIFIER	DESCRIPTION	SUGGESTED LIST PRICE USD ($)
		Select One Code From Each Required Category	
		BASE MACHINE	
3062XF		SS1023B Broadcast Spreader - 3-Point PTO Category I Non-iMatch *226 lb. capacity. Order in multiples of two.*	723.00
		ATTACHMENTS ORDER AS DESIRED	
9010		Hopper Cover (SS1022B and SS1023B)	232.00
9070		Deflector Shield (SS1023B, SS1036B and SS2036B)	93.00
9080		Remote Gate Control (SS1022B, SS1023B and SS1035B)	330.00
9090		Tumbling Wheel Agitator (SS1023B)	74.00
		ATTACHMENTS FOR FIELD CONVERSION	
		Miscellaneous:	
	5BP0099524	Deflector Shield (SS1023B/SS1036B/SS2036B)	93.85
	5BP0099720	Hopper Cover (SS1022B/SS1023B)	232.41
	5BP0099856	Remote Gate Control (SS1022B/SS1023B/SS1035B)	330.66
	5BP0099979	Tumbling Style Wheel Agitator (SS1023B)	74.66

THIS PAGE IS INTENTIONALLY LEFT BLANK

SS1035B Broadcast Spreader - Pull Type Hitch

Equipment for Base Machine

Hopper Material: Steel
Hopper Weight Capacity: 362 lbs.
Hopper Volume Capacity: 5.6 Cubic Ft.
Machine Weight: 84 lbs.
Shipping Weight (Per Pair): 250 lbs.
Swath Spread: 20 Ft.
Hopper Width: 35 In.
Hopper Height: 45 In.
Tractor PTO HP Range: 16-45 HP
PTO RPM: NA (Ground Driven)
PTO Shaft Category (Heavy Duty Shielded 1-3/8 In.): NA (Ground Driven)
3-Point Hitch Category: NA (Single Point Hitch)
iMatch Compatible (Note: Must be Ordered from Factory as iMatch): NA (Single Point Hitch)

CODE	ATTACHMENT IDENTIFIER	DESCRIPTION	SUGGESTED LIST PRICE USD ($)
		Select One Code From Each Required Category	
		BASE MACHINE	
3068XF		SS1035B Broadcast Spreader - Pull Type Hitch *362 lb. capacity. Order in multiples of two.*	980.00
		ATTACHMENTS ORDER AS DESIRED	
9010		Hopper Cover (SS1035B, SS1036B and SS2036B)	242.00
9070		Deflector Shield (SS1022B and SS1035B)	91.00
9080		Remote Gate Control (SS1022B, SS1023B and SS1035B)	330.00
		ATTACHMENTS FOR FIELD CONVERSION	
		Miscellaneous:	
	5BPAA1120	Deflector Shield (SS1022B/SS1035B)	91.15
	5BP0099721	Hopper Cover (SS1035B/SS1036B/SS2036B)	242.29
	5BP0099856	Remote Gate Control (SS1022B/SS1023B/SS1035B)	330.66

SS1035B Broadcast Spreader - Pull Type Hitch
Continued

THIS PAGE IS INTENTIONALLY LEFT BLANK

SS1036B Broadcast Spreader - 3-Point PTO Category I Non-iMatch

Equipment for Base Machine

Hopper Material: Steel
Hopper Weight Capacity: 362 lbs.
Hopper Volume Capacity: 5.6 Cubic Ft.
Machine Weight: 102 lbs.
Shipping Weight (Per Pair): 290 lbs.
Swath Spread: 23 Ft.
Hopper Width: 35 In.
Hopper Height: 34 In.
Tractor PTO HP Range: 16-45 HP
PTO RPM: 540 RPM
PTO Shaft Category I (Heavy Duty Shielded 1-3/8 In.)
3-Point Hitch: Category 0 and I
iMatch Compatible (Note: Must be Ordered from Factory as iMatch): No

CODE	ATTACHMENT IDENTIFIER	DESCRIPTION	SUGGESTED LIST PRICE USD ($)
		Select One Code From Each Required Category	
		BASE MACHINE	
3069XF		SS1036B Broadcast Spreader - 3-Point PTO Category I Non-iMatch *362 lb. capacity. Order in multiples of two.*	760.00
		ATTACHMENTS ORDER AS DESIRED	
9010		Hopper Cover (SS1035B, SS1036B and SS2036B)	242.00
9070		Deflector Shield (SS1023B, SS1036B and SS2036B)	93.00
9080		Remote Gate Control (SS1036B, SS2036B, SS1067B and SS2067B)	330.00
9090		Tumbling Wheel Agitator (SS1036B, SS2036B, SS1067B and SS2067B)	74.00
		ATTACHMENTS FOR FIELD CONVERSION	
		Miscellaneous:	
	5BP0099524	Deflector Shield (SS1023B/SS1036B/SS2036B)	93.85
	5BP0099721	Hopper Cover (SS1035B/SS1036B/SS2036B)	242.29
	5BP0099850	Remote Gate Control (SS1036B/SS2036B/SS1067B/SS2067B)	330.66
	5BP0099978	Tumbling Style Wheel Agitator (SS1036B/SS2036B/SS1067B/SS2067B)	74.66

THIS PAGE IS INTENTIONALLY LEFT BLANK

SS1067B Broadcast Spreader - 3-Point PTO Category I

Equipment for Base Machine

Hopper Material: Steel
Hopper Weight Capacity: 678 lbs.
Hopper Volume Capacity: 10.6 Cubic Ft.
Machine Weight: 125 lbs.
Shipping Weight (Per Pair): 320 lbs.
Swath Spread: 46 Ft.
Hopper Width: 42 In.
Hopper Height: 40 In.
Tractor PTO HP Range: 16-55 HP
PTO RPM: 540 RPM
PTO Shaft Category I (Heavy Duty Shielded 1-3/8 In.)
3-Point Hitch: Category I
iMatch Compatible (Note: Must be Ordered from Factory as iMatch): Optional

CODE	ATTACHMENT IDENTIFIER	DESCRIPTION	SUGGESTED LIST PRICE USD ($)
		Select One Code From Each Required Category	
		BASE MACHINE	
3063XF		SS1067B Broadcast Spreader - 3-Point PTO Category I *678 lb. capacity. Order in multiples of two.*	811.00
		iMATCH COMPATIBILITY	
1000		iMatch Compatible	9.00
1010		Non-iMatch Compatible	In Base Price
		ATTACHMENTS ORDER AS DESIRED	
9010		Hopper Cover (SS1067B and SS2067B)	248.00
9070		Deflector Shield (SS1067B and SS2067B)	179.00
9080		Remote Gate Control (SS1036B, SS2036B, SS1067B and SS2067B)	330.00
9090		Tumbling Wheel Agitator (SS1036B, SS2036B, SS1067B and SS2067B)	74.00
9100		Siderow Discharge (SS1067B and SS2067B)	382.00
		ATTACHMENTS FOR FIELD CONVERSION	
		Miscellaneous:	
	5BP0099638	Deflector Shield (SS1067B/SS2067B)	179.19
	5BP0099722	Hopper Cover (SS1067B/SS2067B)	248.57
	5BP0099850	Remote Gate Control (SS1036B/SS2036B/SS1067B/SS2067B)	330.66
	5BPAA4120	Siderow Discharge (SS1067B/SS2067B)	382.45
	5BP0099978	Tumbling Style Wheel Agitator (SS1036B/SS2036B/SS1067B/SS2067B)	74.66

THIS PAGE IS INTENTIONALLY LEFT BLANK

SS2036B Broadcast Spreader - Poly Hopper - 3-Point PTO Category I Non-iMatch

Equipment for Base Machine

Hopper Material: Polyethylene
Hopper Weight Capacity: 362 lbs.
Hopper Volume Capacity: 5.6 Cubic Ft.
Machine Weight: 102 lbs.
Shipping Weight (Per Pair): 290 lbs.
Swath Spread: 23 Ft.
Hopper Width: 35 In.
Hopper Height: 34 In.
Tractor PTO HP Range: 16-45 HP
PTO RPM: 540 RPM
PTO Shaft Category I (Heavy Duty Shielded 1-3/8 In.)
3-Point Hitch: Category 0 and I
iMatch Compatible (Note: Must be Ordered from Factory as iMatch): No

CODE	ATTACHMENT IDENTIFIER	DESCRIPTION	SUGGESTED LIST PRICE USD ($)
		Select One Code From Each Required Category	
		BASE MACHINE	
3071XF		SS2036B Broadcast Spreader - Poly Hopper - 3-Point PTO Category I Non-iMatch *Stainless steel bottom and nylon spreading disc. 362 lb. capacity. Order in multiples of two.*	990.00
		ATTACHMENTS ORDER AS DESIRED	
9010		Hopper Cover (SS1035B, SS1036B and SS2036B)	242.00
9070		Deflector Shield (SS1023B, SS1036B and SS2036B)	93.00
9080		Remote Gate Control (SS1036B, SS2036B, SS1067B and SS2067B)	330.00
9090		Tumbling Wheel Agitator (SS1036B, SS2036B, SS1067B and SS2067B)	74.00
		ATTACHMENTS FOR FIELD CONVERSION	
		Miscellaneous:	
	5BP0099524	Deflector Shield (SS1023B/SS1036B/SS2036B)	93.85
	5BP0099721	Hopper Cover (SS1035B/SS1036B/SS2036B)	242.29
	5BP0099850	Remote Gate Control (SS1036B/SS2036B/SS1067B/SS2067B)	330.66
	5BP0099978	Tumbling Style Wheel Agitator (SS1036B/SS2036B/SS1067B/SS2067B)	74.66

THIS PAGE IS INTENTIONALLY LEFT BLANK

SS2067B Broadcast Spreader - Poly Hopper - 3-Point PTO Category I

Equipment for Base Machine

Hopper Material: Polyethylene
Hopper Weight Capacity: 678 lbs.
Hopper Volume Capacity: 10.6 Cubic Ft.
Machine Weight: 125 lbs.
Shipping Weight (Per Pair): 320 lbs.
Swath Spread: 46 Ft.
Hopper Width: 42 In.
Hopper Height: 40 In.
Tractor PTO HP Range: 16-55 HP
PTO RPM: 540 RPM
PTO Shaft Category I (Heavy Duty Shielded 1-3/8 In.)
3-Point Hitch: Category 1
iMatch Compatible (Note: Must be Ordered from Factory as iMatch): Optional

CODE	ATTACHMENT IDENTIFIER	DESCRIPTION	SUGGESTED LIST PRICE USD ($)

Select One Code From Each Required Category

BASE MACHINE

3072XF		SS2067B Broadcast Spreader - Poly Hopper - 3-Point PTO Category I *Stainless steel bottom and spreading disc. 678 lb. capacity. Order in multiples of two.*	1,271.00

iMATCH COMPATIBILITY

1000		iMatch Compatible	9.00
1010		Non-iMatch Compatible	In Base Price

ATTACHMENTS ORDER AS DESIRED

9010		Hopper Cover (SS1067B and SS2067B)	248.00
9070		Deflector Shield (SS1067B and SS2067B)	179.00
9080		Remote Gate Control (SS1036B, SS2036B, SS1067B and SS2067B)	330.00
9090		Tumbling Wheel Agitator (SS1036B, SS2036B, SS1067B and SS2067B)	74.00
9100		Siderow Discharge (SS1067B and SS2067B)	382.00

ATTACHMENTS FOR FIELD CONVERSION

		Miscellaneous:	
	5BP0099638	Deflector Shield (SS1067B/SS2067B)	179.19
	5BP0099722	Hopper Cover (SS1067B/SS2067B)	248.57
	5BP0099850	Remote Gate Control (SS1036B/SS2036B/SS1067B/SS2067B)	330.66
	5BPAA4120	Siderow Discharge (SS1067B/SS2067B)	382.45
	5BP0099978	Tumbling Style Wheel Agitator (SS1036B/SS2036B/SS1067B/SS2067B)	74.66

SS2067B Broadcast Spreader - Poly Hopper - 3-Point PTO Category I
Continued

THIS PAGE IS INTENTIONALLY LEFT BLANK

SS1079P Pendular Spreader - 3-Point PTO Category I

Equipment for Base Machine

Hopper Weight Capacity: 792 lbs.
Hopper Volume Capacity: 12.4 Cubic Ft.
Machine Weight: 250 lbs.
Swath Spread Range: 17-47 Ft.
Load Height: 43 In.
Tractor HP Range: 20-60 HP
PTO RPM: 540 RPM
3-Point Hitch: Category I

iMatch Compatible: No

CODE	ATTACHMENT IDENTIFIER	DESCRIPTION	SUGGESTED LIST PRICE USD ($)
		Select One Code From Each Required Category	
		BASE MACHINE	
3064XF		SS1079P Pendular Spreader - 3-Point PTO Category I *792 lb. capacity.*	2,548.00
		ATTACHMENTS ORDER AS DESIRED	
9000		Agitator Extension (SS1079P)	162.00
9010		Hopper Cover (SS1079P)	257.00
9020		Salt and Sand Spout (SS1079P, SS1116P, SS1180P and SS1220P)	279.00
9030		Rubber Insert (SS1079P, SS1116P, SS1180P and SS1220P)	99.00
9040		L/R Direct Att (SS1079P, SS1116P, SS1180P and SS1220P)	64.00
9110		Lock Nut for Spout (SS1079P, SS1116P, SS1180P, SS1220P)	44.00
		ATTACHMENTS FOR FIELD CONVERSION	
		Miscellaneous:	
	5BPAZ1301	Agitator Extension (SS1079P)	162.02
	5BP0099724	Hopper Cover (SS1079P)	257.70
	5BPAZ8300	Left/Right Directional Attachment	64.36
	5BP0014984	Lock Nut for Spout (SS1079P, SS1116P, SS1180P, SS1220P)	44.57
	5BPAZ4300	Rubber Insert	99.68
	5BPAZ2300	Salt and Sand Spout	279.49

THIS PAGE IS INTENTIONALLY LEFT BLANK

SS1116P Pendular Spreader - 3-Point PTO Category I or II

Equipment for Base Machine

Hopper Weight Capacity: 1168 lbs.
Hopper Volume Capacity: 22.5 Cubic Ft.
Machine Weight: 321 lbs.
Swath Spread Range: 17-47 Ft.
Load Height: 38 In.
Tractor HP Range: 20-60 HP
PTO RPM: 540 RPM
Three Point Hitch: Category I or II

iMatch Compatible: No

CODE	ATTACHMENT IDENTIFIER	DESCRIPTION	SUGGESTED LIST PRICE USD ($)
		Select One Code From Each Required Category	
		BASE MACHINE	
3065XF		SS1116P Pendular Spreader - 3-Point PTO Category I or II *1168 lb. capacity.*	3,495.00
		ATTACHMENTS ORDER AS DESIRED	
9000		Agitator Extension (SS1116P, SS1180P and SS1220P)	164.00
9010		Hopper Cover (SS1116P)	295.00
9020		Salt and Sand Spout (SS1079P, SS1116P, SS1180P and SS1220P)	279.00
9030		Rubber Insert (SS1079P, SS1116P, SS1180P and SS1220P)	99.00
9040		L/R Direct Att (SS1079P, SS1116P, SS1180P and SS1220P)	64.00
9050		Hydraulic Control (SS1116P, SS1180P and SS1220P)	553.00
9060		Filter Grill (SS1116P, SS1180P and SS1220P)	391.00
9110		Lock Nut for Spout (SS1079P, SS1116P, SS1180P, SS1220P)	44.00
		ATTACHMENTS FOR FIELD CONVERSION	
		Miscellaneous:	
	5BPAZ7303	Agitator Extension (SS1116P/SS1180P/SS1220P)	164.05
	5BPAZ6303	Filter Grill (SS1116P/SS1180P/SS1220P)	391.10
	5BP0099725	Hopper Cover (SS1116P)	295.67
	5BPAZ3303	Hydraulic Control (SS1116P/SS1180P/SS1220P)	553.36
	5BPAZ8300	Left/Right Directional Attachment	64.36
	5BP0014984	Lock Nut for Spout (SS1079P, SS1116P, SS1180P, SS1220P)	44.57
	5BPAZ4300	Rubber Insert	99.68

SS1116P Pendular Spreader - 3-Point PTO Category I or II
Continued

CODE	ATTACHMENT IDENTIFIER	DESCRIPTION	SUGGESTED LIST PRICE USD ($)
		ATTACHMENTS FOR FIELD CONVERSION ...Continued...	
	5BPAZ2300	Salt and Sand Spout	279.49

SS1180P Pendular Spreader - 3-Point PTO Category I or II

Equipment for Base Machine

Hopper Weight Capacity: 1808 lbs.
Hopper Volume Capacity: 34.7 Cubic Ft.
Machine Weight: 339 lbs.
Swath Spread Range: 17-47 Ft.
Load Height: 43 In.
Tractor HP Range: 20-60 HP
PTO RPM: 540 RPM
Three Point Hitch: Category I or II

iMatch Compatible: No

CODE	ATTACHMENT IDENTIFIER	DESCRIPTION	SUGGESTED LIST PRICE USD ($)

Select One Code From Each Required Category

BASE MACHINE

3066XF		SS1180P Pendular Spreader - 3-Point PTO Category I or II *1808 lb. capacity.*	3,940.00

ATTACHMENTS ORDER AS DESIRED

9000		Agitator Extension (SS1116P, SS1180P and SS1220P)	164.00
9020		Salt and Sand Spout (SS1079P, SS1116P, SS1180P and SS1220P)	279.00
9030		Rubber Insert (SS1079P, SS1116P, SS1180P and SS1220P)	99.00
9040		L/R Direct Att (SS1079P, SS1116P, SS1180P and SS1220P)	64.00
9050		Hydraulic Control (SS1116P, SS1180P and SS1220P)	553.00
9060		Filter Grill (SS1116P, SS1180P and SS1220P)	391.00
9110		Lock Nut for Spout (SS1079P, SS1116P, SS1180P, SS1220P)	44.00

ATTACHMENTS FOR FIELD CONVERSION

		Miscellaneous:	
	5BPAZ7303	Agitator Extension (SS1116P/SS1180P/SS1220P)	164.05
	5BPAZ6303	Filter Grill (SS1116P/SS1180P/SS1220P)	391.10
	5BP0099726	Hopper Cover (SS1180P)	302.82
	5BPAZ3303	Hydraulic Control (SS1116P/SS1180P/SS1220P)	553.36
	5BPAZ8300	Left/Right Directional Attachment	64.36
	5BP0014984	Lock Nut for Spout (SS1079P, SS1116P, SS1180P, SS1220P)	44.57
	5BPAZ4300	Rubber Insert	99.68
	5BPAZ2300	Salt and Sand Spout	279.49

THIS PAGE IS INTENTIONALLY LEFT BLANK

SS1220P Pendular Spreader - 3-Point PTO Category I or II

Equipment for Base Machine

Hopper Weight Capacity: 2205 lbs.
Hopper Volume Capacity: 42.4 Cubic Ft.
Machine Weight: 343 lbs.
Swath Spread Range: 17-47 Ft.
Load Height: 47 In.
Tractor HP Range: 20-60 HP
PTO RPM: 540 RPM
Three Point Hitch: Category I or II

iMatch Compatible: No

CODE	ATTACHMENT IDENTIFIER	DESCRIPTION	SUGGESTED LIST PRICE USD ($)

Select One Code From Each Required Category

BASE MACHINE

3067XF		SS1220P Pendular Spreader - 3-Point PTO Category I or II *2205 lb. capacity.*	4,394.00

ATTACHMENTS ORDER AS DESIRED

9000		Agitator Extension (SS1116P, SS1180P and SS1220P)	164.00
9020		Salt and Sand Spout (SS1079P, SS1116P, SS1180P and SS1220P)	279.00
9030		Rubber Insert (SS1079P, SS1116P, SS1180P and SS1220P)	99.00
9040		L/R Direct Att (SS1079P, SS1116P, SS1180P and SS1220P)	64.00
9050		Hydraulic Control (SS1116P, SS1180P and SS1220P)	553.00
9060		Filter Grill (SS1116P, SS1180P and SS1220P)	391.00
9110		Lock Nut for Spout (SS1079P, SS1116P, SS1180P, SS1220P)	44.00

ATTACHMENTS FOR FIELD CONVERSION

		Miscellaneous:	
	5BPAZ7303	Agitator Extension (SS1116P/SS1180P/SS1220P)	164.05
	5BPAZ6303	Filter Grill (SS1116P/SS1180P/SS1220P)	391.10
	5BP0099727	Hopper Cover (SS1220P)	317.78
	5BPAZ3303	Hydraulic Control (SS1116P/SS1180P/SS1220P)	553.36
	5BPAZ8300	Left/Right Directional Attachment	64.36
	5BP0014984	Lock Nut for Spout (SS1079P, SS1116P, SS1180P, SS1220P)	44.57
	5BPAZ4300	Rubber Insert	99.68
	5BPAZ2300	Salt and Sand Spout	279.49

THIS PAGE IS INTENTIONALLY LEFT BLANK

SS3067B Broadcast Spreader - Poly Hopper - 3-Point PTO Category I Non-iMatch

Equipment for Base Machine

Hopper Material: Polyethylene
Hopper Weight Capacity: 860 lbs.
Hopper Volume Capacity: 10 Cubic Ft.
Machine Weight: 128 lbs.
Shipping Weight (Per Pair): 300 lbs.
Swath Spread: 49 Ft.
Hopper Width: 42 In.
Hopper Height: 42 In.
Tractor PTO HP Range: 20-60 HP
PTO RPM: 540 RPM
PTO Shaft Category I (Heavy Duty Shielded 1-3/8 In.)
3-Point Hitch: Category 1
Not iMatch Compatible
Ships to dealer assembled

CODE	ATTACHMENT IDENTIFIER	DESCRIPTION	SUGGESTED LIST PRICE USD ($)

Select One Code From Each Required Category

BASE MACHINE

1621XF	SS3067B Broadcast Spreader - Poly Hopper - 3-Point PTO Category I Non-iMatch	726.00

THIS PAGE IS INTENTIONALLY LEFT BLANK

PS1001 Integral Subsoiler

Equipment for Base Machine

Hitch:
Lift-type, Category I,
iMatch Compatible
Working Depth:
Up to 24 In. (609.6 mm)
Transport Length:
16 In. (406.4 mm)
Transport Width:
32.5 In. (825.5 mm)
Transport Height:
49 In. (1,244.6 mm)

Tractor Engine HP Range:
25 - 45 HP
Point:
Reversible, Rectangular Sloped Point,
2.5625 In. (65.1 mm) x 12 In. (304.8 mm)

CODE	ATTACHMENT IDENTIFIER	DESCRIPTION	SUGGESTED LIST PRICE USD ($)
		Select One Code From Each Required Category	
		BASE MACHINE	
3451XF		PS1001 Integral Subsoiler *Order in multiples of two.*	276.00
		ATTACHMENTS FOR FIELD CONVERSION	
		Miscellaneous:	
	5TITE511154	French Kit - Includes Operator's Manual, Parts Catalog and Safety Decals *PS1001*	13.21

PS1001 Integral Subsoiler
Continued

THIS PAGE IS INTENTIONALLY LEFT BLANK

DT1136 - 3 pt. Standard Duty Trencher

Equipment for Base Machine

Hitch: 3-Point Category I
  and iMatch
Working Depth at 65 Degree Digging angle: 36 in. (914.4 mm)
Chain Width: 6 in. (152.4 mm)
Working Weight: 650 lbs. (294.8 kg)
Tractor PTO HP:
  15 HP (11.2 kW) Minimum
  30 HP (22.3 kW) Maximum
Recommended Trenching Angle: 65 Degrees
Headshaft Height: 8.5 in. (215.9 mm)
Shipping Weight: 730 lbs. (331.1 kg)
Overall Length: 79 in. (2,006.6 mm)
Overall Width: 38 in. (965.2 mm)
Overall Height: 29 in. (736.6 mm)
Discharge Auger: 14 in. (355.6 mm)
Spoil Discharge Reach: 21 in. (533.4 mm)
540 RPM Rear PTO
Slip Clutch Overload Protection
Parking Stand: Standard
Rear Hydraulics Required

CODE	ATTACHMENT IDENTIFIER	DESCRIPTION	SUGGESTED LIST PRICE USD ($)

Select One Code From Each Required Category

BASE MACHINE

1561XF	DT1136 - 3 pt. Standard Duty Trencher *Includes 36 in. boom, crummer, and chain.*	7,591.00

DT1136 - 3 pt. Standard Duty Trencher
Continued

THIS PAGE IS INTENTIONALLY LEFT BLANK

WC1103 Wood Chipper, 3-Point, PTO Drive, Gravity Feed 3 In. Capacity

Equipment for Base Machine

Using a Belt Drive System
  PTO Speed Increased from
  540 to 1380-1920 RPM's at Rotor
  (Depending on Model)
High Speed Design Requires Less Horsepower
  than Direct Drive Models
Double Sided A8 Tool Steel Knives
Adjustable Hardened Anvil

SMV is Standard Equipment
1 Year Parts and Labor Warranty

CODE	ATTACHMENT IDENTIFIER	DESCRIPTION	SUGGESTED LIST PRICE USD ($)

Select One Code From Each Required Category

BASE MACHINE

1501XF		WC1103 Wood Chipper, 3-Point, PTO Drive, Gravity Feed 3 In. Capacity	3,556.00

ATTACHMENTS FOR FIELD CONVERSION

		Miscellaneous:	
	5PQ903177	French Operators Manual & Decal Kit WC1103 Wood Chipper *Destination of Quebec only. Includes French safety decals and manual.*	See Parts

WC1103 Wood Chipper, 3-Point, PTO Drive, Gravity Feed 3 In. Capacity
Continued

THIS PAGE IS INTENTIONALLY LEFT BLANK

WC1105 Wood Chipper, 3-Point, PTO Drive, Gravity Feed 5 In. Capacity

Equipment for Base Machine

```
Using a Belt Drive System
  PTO Speed Increased from
  540 to 1380-1920 RPM's at Rotor
  (Depending on Model)
High Speed Design Requires Less Horsepower
  than Direct Drive Models
Double Sided A8 Tool Steel Knives
Adjustable Hardened Anvil
```

```
SMV is Standard Equipment
1 Year Parts and Labor Warranty
```

CODE	ATTACHMENT IDENTIFIER	DESCRIPTION	SUGGESTED LIST PRICE USD ($)

Select One Code From Each Required Category

BASE MACHINE

1502XF		WC1105 Wood Chipper, 3-Point, PTO Drive, Gravity Feed 5 In. Capacity	4,874.00

ATTACHMENTS FOR FIELD CONVERSION

		Miscellaneous:	
	5PQ903178	French Operators Manual & Decal Kit WC1105 Wood Chipper *Destination of Quebec only. Includes French safety decals and manual.*	See Parts

WC1105 Wood Chipper, 3-Point, PTO Drive, Gravity Feed 5 In. Capacity
Continued

THIS PAGE IS INTENTIONALLY LEFT BLANK

WC1205 Wood Chipper, 3-Point, PTO Drive, Hydraulic Feed 5 In. Capacity

Equipment for Base Machine

Using a Belt Drive System
  PTO Speed Increased from
  540 to 1380-1920 RPM's at Rotor
  (Depending on Model)
Hydraulic Feed
High Speed Design Requires Less Horsepower
  than Direct Drive Models
Double Sided A8 Tool Steel Knives
Adjustable Hardened Anvil

SMV is Standard Equipment
1 Year Parts and Labor Warranty

CODE	ATTACHMENT IDENTIFIER	DESCRIPTION	SUGGESTED LIST PRICE USD ($)
		Select One Code From Each Required Category	
		BASE MACHINE	
1511XF		WC1205 Wood Chipper, 3-Point, PTO Drive, Hydraulic Feed 5 In. Capacity	7,383.00
		SPECIAL EQUIPMENT - FACTORY INSTALLED	
8000		WC1205 Self-Contained Hydraulics	891.00
8010		WC1205 Auto Feed (Speed Control)	1,008.00
		ATTACHMENTS FOR FIELD CONVERSION	
		Miscellaneous:	
	5PQ903179	French Operators Manual & Decal Kit WC1205 Wood Chipper *Destination of Quebec only. Includes French safety decals and manual.*	See Parts

WC1205 Wood Chipper, 3-Point, PTO Drive, Hydraulic Feed 5 In. Capacity
Continued

THIS PAGE IS INTENTIONALLY LEFT BLANK

WC1208 Wood Chipper, Pull Type, PTO Drive, Hydraulic Feed 8 In. Capacity

Equipment for Base Machine

Using a Belt Drive System
  PTO Speed Increased from
  540 to 2050 RPM's at Rotor
  (Depending on Model)
Hydraulic Feed
High Speed Design Requires Less Horsepower
  than Direct Drive Models
Drum-Style Rotor
Double Sided A8 Tool Steel Knives

Adjustable Hardened Anvil
SMV is Standard Equipment
1 Year Parts and Labor Warranty

CODE	ATTACHMENT IDENTIFIER	DESCRIPTION	SUGGESTED LIST PRICE USD ($)
		Select One Code From Each Required Category	
		BASE MACHINE	
1513XF		WC1208 Wood Chipper, Pull Type, PTO Drive, Hydraulic Feed 8 In. Capacity	15,276.00
		SPECIAL EQUIPMENT - FACTORY INSTALLED	
8000		WC1208 Self-Contained Hydraulics	1,136.00
8010		WC1208 Auto Feed (Speed Control)	1,147.00
		ATTACHMENTS FOR FIELD CONVERSION	
		Miscellaneous:	
	5PQ903185	French Operators Manual & Decal Kit WC1208 Wood Chipper *Destination of Quebec only. Includes French safety decals and manual.*	See Parts

WC1208 Wood Chipper, Pull Type, PTO Drive, Hydraulic Feed 8 In. Capacity
Continued

THIS PAGE IS INTENTIONALLY LEFT BLANK

AY11H - 60 In. 4-In-1 Bucket for Current 300/400 Series Carrier

Equipment for Base Machine

```
Cutting Width: 60 In.
Loader Series:
  300 and 400 only (Not 500 Series)
Dimensions:
  W61.9 In. x H26.9 In. x D28.0 In.
Capacity:
  3.69 Cubic Foot
Grapple Opening: 28.45 In.
```

```
Operational Weight: 360 lbs.
Shipping Weight: 385 lbs.
```

Hydraulic kit 5MP107610 is required to adapt buckets to 1/2 In. body couplers. 1/2 In. body couplers are standard equipment for 500 series loader 3rd function oil lines and hoses.

Hydraulic functions on loader attachment require Third Function Hydraulic Lines and Hoses on loader as well as a tractor with (3) SCV's. Please reference the loader and tractor sales information for additional information.

CODE	ATTACHMENT IDENTIFIER	DESCRIPTION	SUGGESTED LIST PRICE USD ($)
		Select One Code From Each Required Category	
		BASE MACHINE	
2211XF		AY11H - 60 In. 4-In-1 Bucket for Current 300/400 Series Carrier *Note: Reference Frontier Loader Attachment Compatibility Chart for specific loader compatibility.*	2,601.00
		ATTACHMENTS - ORDER AS DESIRED	
9000		Tooth Bar for 60 In. 4-In-1 Bucket (AY11H)	491.00
9200		French Operators Manual and Decal Kit (AY11 and AY12 Series)	No Charge
		ATTACHMENTS FOR FIELD CONVERSION	
		Miscellaneous:	
	5MP43054	French Operator's Manual and Decal Kit (AD11, AD12, AM11, AR10, AR12, AY11 and AY12)	0.00
	5FP10642	Tooth Bar for 60 In. 4-In-1 Bucket (AY11H)	530.39

THIS PAGE IS INTENTIONALLY LEFT BLANK

AY11E - 72 In. 4-In-1 Bucket for Current 300/400/500 Series Carrier

Equipment for Base Machine

```
Cutting Width: 72 In.
Loader Series:
  300, 400, and 500
Dimensions:
  W73.9 In. x H26.9 In. x D28.0 In.
Capacity:
  4.5 Cubic Foot
Grapple Opening: 28.45 In.
```

```
Operational Weight: 425 lbs.
Shipping Weight: 450 lbs.
```

Hydraulic kit 5MP107610 is required to adapt buckets to 1/2 In. body couplers. 1/2 In. body couplers are standard equipment for 500 series loader 3rd function oil lines and hoses.

Hydraulic functions on loader attachment require Third Function Hydraulic Lines and Hoses on loader as well as a tractor with (3) SCV's. Please reference the loader and tractor sales information for additional information.

CODE	ATTACHMENT IDENTIFIER	DESCRIPTION	SUGGESTED LIST PRICE USD ($)
		Select One Code From Each Required Category	
		BASE MACHINE	
2212XF		AY11E - 72 In. 4-In-1 Bucket for Current 300/400/500 Series Carrier *Note: Reference Frontier Loader Attachment Compatibility Chart for specific loader compatibility.*	2,801.00
		ATTACHMENTS - ORDER AS DESIRED	
9000		Tooth Bar for 72 In. 4-In-1 Bucket (AY11E)	587.00
9200		French Operators Manual and Decal Kit (AY11 and AY12 Series)	No Charge
		ATTACHMENTS FOR FIELD CONVERSION	
		Miscellaneous:	
	5MP43054	French Operator's Manual and Decal Kit (AD11, AD12, AM11, AR10, AR12, AY11 and AY12)	0.00
	5FP10643	Tooth Bar for 72 In. 4-In-1 Bucket (AY11E)	633.99

THIS PAGE IS INTENTIONALLY LEFT BLANK

AY12D - 72 In. 4-In-1 Bucket for Current 600/700 Series Carrier

Equipment for Base Machine

```
Cutting Width: 72 In.
Loader Series:
  600 and 700
Dimensions:
  W72 In. x H20 In. x D29.38 In.
Capacity:
  17.07 Cubic Foot
Grapple Opening: 34.78 In.
```

```
Operational Weight: 900 lbs.
Shipping Weight: 925 lbs.
```

Hydraulic functions on loader attachment require third function hydraulic lines and hoses on loader as well as a tractor with (3) SCV's. Please reference the loader and tractor sales information for additional information.

CODE	ATTACHMENT IDENTIFIER	DESCRIPTION	SUGGESTED LIST PRICE USD ($)
		Select One Code From Each Required Category	
		BASE MACHINE	
2221XF		AY12D - 72 In. 4-In-1 Bucket for Current 600/700 Series Carrier *Note: Reference Frontier Loader Attachment Compatibility Chart for specific loader compatibility.*	4,418.00
		ATTACHMENTS - ORDER AS DESIRED	
9000		Tooth Bar for 72 In. 4-In-1 Bucket (AY12)	646.00
9200		French Operators Manual and Decal Kit (AY11 and AY12 Series)	No Charge
		ATTACHMENTS FOR FIELD CONVERSION	
		Miscellaneous:	
	5MP43054	French Operator's Manual and Decal Kit (AD11, AD12, AM11, AR10, AR12, AY11 and AY12)	0.00
	5FP33823	Tooth Bar for 72 In. 4-In-1 Bucket (AY12)	698.45

THIS PAGE IS INTENTIONALLY LEFT BLANK

AY12D - 78 In. 4-In-1 Bucket for Current 600/700 Series Carrier

Equipment for Base Machine

```
Cutting Width: 78 In.
Loader Series:
  600 and 700
Dimensions:
  W78 In. x H20 In. x D29.38 In.
Capacity:
  18.5 Cubic Foot
Grapple Opening: 34.78 In.
```

```
Operational Weight: 935 lbs.
Shipping Weight: 960 lbs.
```

Hydraulic functions on loader attachment require third function hydraulic lines and hoses on loader as well as a tractor with (3) SCV's. Please reference the loader and tractor sales information for additional information.

CODE	ATTACHMENT IDENTIFIER	DESCRIPTION	SUGGESTED LIST PRICE USD ($)
		Select One Code From Each Required Category	
		BASE MACHINE	
2223XF		AY12D - 78 In. 4-In-1 Bucket for Current 600/700 Series Carrier *Note: Reference Frontier Loader Attachment Compatibility Chart for specific loader compatibility.*	4,598.00
		ATTACHMENTS - ORDER AS DESIRED	
9000		Tooth Bar for 78 In. 4-In-1 Bucket (AY12)	664.00
9200		French Operators Manual and Decal Kit (AY11 and AY12 Series)	No Charge
		ATTACHMENTS FOR FIELD CONVERSION	
		Miscellaneous:	
	5MP43054	French Operator's Manual and Decal Kit (AD11, AD12, AM11, AR10, AR12, AY11 and AY12)	0.00
	5FP16288	Tooth Bar for 78 In. 4-In-1 Bucket (AY12)	717.09

THIS PAGE IS INTENTIONALLY LEFT BLANK

AY12D - 84 In. 4-In-1 Bucket for Current 600/700 Series Carrier

Equipment for Base Machine

Cutting Width: 84 In.
Loader Series:
  600 and 700
Dimensions:
  W84 In. x H20 In. x D29.38 In.
Capacity:
  19.93 Cubic Foot
Grapple Opening: 34.78 In.

Operational Weight: 975 lbs.
Shipping Weight: 1000 lbs.

Hydraulic functions on loader attachment require third function hydraulic lines and hoses on loader as well as a tractor with (3) SCV's. Please reference the loader and tractor sales information for additional information.

CODE	ATTACHMENT IDENTIFIER	DESCRIPTION	SUGGESTED LIST PRICE USD ($)
		Select One Code From Each Required Category	
		BASE MACHINE	
2225XF		AY12D - 84 In. 4-In-1 Bucket for Current 600/700 Series Carrier *Note: Reference Frontier Loader Attachment Compatibility Chart for specific loader compatibility.*	4,815.00
		ATTACHMENTS - ORDER AS DESIRED	
9000		Tooth Bar for 84 In. 4-In-1 Bucket (AY12)	684.00
9200		French Operators Manual and Decal Kit (AY11 and AY12 Series)	No Charge
		ATTACHMENTS FOR FIELD CONVERSION	
		Miscellaneous:	
	5MP43054	French Operator's Manual and Decal Kit (AD11, AD12, AM11, AR10, AR12, AY11 and AY12)	0.00
	5FP16193	Tooth Bar for 84 In. 4-In-1 Bucket (AY12)	739.26

THIS PAGE IS INTENTIONALLY LEFT BLANK

AY12G - 72 In. 4-In-1 Bucket for Current Loaders with Global Carrier

Equipment for Base Machine

Cutting Width: 72 In.
Loader Series:
  Global Carrier
Dimensions:
  W72 In. x H20 In. x D29.38 In.
Capacity:
  17.07 Cubic Foot
Grapple Opening: 34.78 In.

Operational Weight: 900 lbs.
Shipping Weight: 925 lbs.

Hydraulic functions on loader attachment require third function hydraulic lines and hoses on loader as well as a tractor with (3) SCV's. Please reference the loader and tractor sales information for additional information.

CODE	ATTACHMENT IDENTIFIER	DESCRIPTION	SUGGESTED LIST PRICE USD ($)
		Select One Code From Each Required Category	
		BASE MACHINE	
2222XF		AY12G - 72 In. 4-In-1 Bucket for Current Loaders with Global Carrier *Note: Option is not compatible with Global Category II Carrier. Reference Frontier Loader Attachment Compatibility Chart for specific loader compatibility.*	4,387.00
		ATTACHMENTS - ORDER AS DESIRED	
9000		Tooth Bar for 72 In. 4-In-1 Bucket (AY12)	646.00
9200		French Operators Manual and Decal Kit (AY11 and AY12 Series)	No Charge
		ATTACHMENTS FOR FIELD CONVERSION	
		Miscellaneous:	
	5MP43054	French Operator's Manual and Decal Kit (AD11, AD12, AM11, AR10, AR12, AY11 and AY12)	0.00
	5FP33823	Tooth Bar for 72 In. 4-In-1 Bucket (AY12)	698.45

THIS PAGE IS INTENTIONALLY LEFT BLANK

AY12G - 78 In. 4-In-1 Bucket for Current Loaders with Global Carrier

Equipment for Base Machine

```
Cutting Width: 78 In.
Loader Series:
  Global Carrier
Dimensions:
  W78 In. x H20 In. x D29.38 In.
Capacity:
  18.5 Cubic Foot
Grapple Opening: 34.78 In.
```

```
Operational Weight: 935 lbs.
Shipping Weight: 960 lbs.
```

Hydraulic functions on loader attachment require third function hydraulic lines and hoses on loader as well as a tractor with (3) SCV's. Please reference the loader and tractor sales information for additional information.

CODE	ATTACHMENT IDENTIFIER	DESCRIPTION	SUGGESTED LIST PRICE USD ($)
		Select One Code From Each Required Category	
		BASE MACHINE	
2224XF		AY12G - 78 In. 4-In-1 Bucket for Current Loaders with Global Carrier *Note: Option is not compatible with Global Category II Carrier. Reference Frontier Loader Attachment Compatibility Chart for specific loader compatibility.*	4,635.00
		ATTACHMENTS - ORDER AS DESIRED	
9000		Tooth Bar for 78 In. 4-In-1 Bucket (AY12)	664.00
9200		French Operators Manual and Decal Kit (AY11 and AY12 Series)	No Charge
		ATTACHMENTS FOR FIELD CONVERSION	
		Miscellaneous:	
	5MP43054	French Operator's Manual and Decal Kit (AD11, AD12, AM11, AR10, AR12, AY11 and AY12)	0.00
	5FP16288	Tooth Bar for 78 In. 4-In-1 Bucket (AY12)	717.09

THIS PAGE IS INTENTIONALLY LEFT BLANK

AY12G - 84 In. 4-In-1 Bucket for Current Loaders with Global Carrier

Equipment for Base Machine

```
Cutting Width: 84 In.
Loader Series:
  Global Carrier
Dimensions:
  W84 In. x H20 In. x D29.38 In.
Capacity:
  19.93 Cubic Foot
Grapple Opening: 34.78 In.
```

```
Operational Weight: 975 lbs.
Shipping Weight: 1000 lbs.
```

Hydraulic functions on loader attachment require third function hydraulic lines and hoses on loader as well as a tractor with (3) SCV's. Please reference the loader and tractor sales information for additional information.

CODE	ATTACHMENT IDENTIFIER	DESCRIPTION	SUGGESTED LIST PRICE USD ($)
		Select One Code From Each Required Category	
		BASE MACHINE	
2226XF		AY12G - 84 In. 4-In-1 Bucket for Current Loaders with Global Carrier *Note: Option is not compatible with Global Category II Carrier. Reference Frontier Loader Attachment Compatibility Chart for specific loader compatibility.*	4,915.00
		ATTACHMENTS - ORDER AS DESIRED	
9000		Tooth Bar for 84 In. 4-In-1 Bucket (AY12)	684.00
9200		French Operators Manual and Decal Kit (AY11 and AY12 Series)	No Charge
		ATTACHMENTS FOR FIELD CONVERSION	
		Miscellaneous:	
	5MP43054	French Operator's Manual and Decal Kit (AD11, AD12, AM11, AR10, AR12, AY11 and AY12)	0.00
	5FP16193	Tooth Bar for 84 In. 4-In-1 Bucket (AY12)	739.26

THIS PAGE IS INTENTIONALLY LEFT BLANK

AB16A Small Square Bale Handler for Current 800 Series Carrier

Equipment for Base Machine

```
Hydraulics:
  Single Auxiliary Hydraulic Service
Shipping Weight With Pallet:
  1190 lbs.
Operational Weight: 1090 lbs.
Dimensions: 31H x 80W x 90L
32 Engaging Teeth
```

Hydraulic functions on loader attachment require third function hydraulic lines and hoses on loader as well as a tractor with (3) SCV's. Please reference the loader and tractor sales information for additional information.

CODE	ATTACHMENT IDENTIFIER	DESCRIPTION	SUGGESTED LIST PRICE USD ($)
		Select One Code From Each Required Category	
		BASE MACHINE	
2051XF		AB16A Small Square Bale Handler for Current 800 Series Carrier *Picks up 8 flat or 10 indexed small square bales.* *Note: Reference Frontier Loader Attachment Compatibility Chart for specific loader compatibility.*	7,447.00
		ATTACHMENTS - ORDER AS DESIRED	
9200		French Operators Manual and Decal Kit for Models: (AB16 Series)	No Charge
		ATTACHMENTS FOR FIELD CONVERSION	
		Miscellaneous:	
	5MP43052	French Operator's Manual and Decal Kit for Models: AB15, AB16, AE11, AF11, AF12, AG10, AH11, AS10, AS11	0.00

THIS PAGE IS INTENTIONALLY LEFT BLANK

AB16D Small Square Bale Handler for Current 600/700 Series Carrier

Equipment for Base Machine

```
Hydraulics:
  Single Auxiliary Hydraulic Service
Shipping Weight With Pallet:
  1190 lbs.
Operational Weight: 1090 lbs.
Dimensions: 31H x 80W x 90L
32 Engaging Teeth
```

Hydraulic functions on loader attachment require third function hydraulic lines and hoses on loader as well as a tractor with (3) SCV's. Please reference the loader and tractor sales information for additional information.

CODE	ATTACHMENT IDENTIFIER	DESCRIPTION	SUGGESTED LIST PRICE USD ($)
		Select One Code From Each Required Category	
		BASE MACHINE	
2052XF		AB16D Small Square Bale Handler for Current 600/700 Series Carrier *Picks up 8 flat or 10 indexed small square bales.* *Note: Reference Frontier Loader Attachment Compatibility Chart for specific loader compatibility.*	6,841.00
		ATTACHMENTS - ORDER AS DESIRED	
9200		French Operators Manual and Decal Kit for Models: (AB16 Series)	No Charge
		ATTACHMENTS FOR FIELD CONVERSION	
		Miscellaneous:	
	5MP43052	French Operator's Manual and Decal Kit for Models: AB15, AB16, AE11, AF11, AF12, AG10, AH11, AS10, AS11	0.00

THIS PAGE IS INTENTIONALLY LEFT BLANK

AB16G Small Square Bale Handler for Current Loaders with Global Carrier

Equipment for Base Machine

```
Hydraulics:
  Single Auxiliary Hydraulic Service
Shipping Weight With Pallet:
  1190 lbs.
Operational Weight: 1090 lbs.
Dimensions: 31H x 80W x 90L
32 Engaging Teeth
```

Hydraulic functions on loader attachment require third function hydraulic lines and hoses on loader as well as a tractor with (3) SCV's. Please reference the loader and tractor sales information for additional information.

CODE	ATTACHMENT IDENTIFIER	DESCRIPTION	SUGGESTED LIST PRICE USD ($)
		Select One Code From Each Required Category	
		BASE MACHINE	
2053XF		AB16G Small Square Bale Handler for Current Loaders with Global Carrier *Picks up 8 flat or 10 indexed small square bales.* *Note: Option is not compatible with Global Category II Carrier. Reference Frontier Loader Attachment Compatibility Chart for specific loader compatibility.*	6,784.00
		ATTACHMENTS - ORDER AS DESIRED	
9200		French Operators Manual and Decal Kit for Models: (AB16 Series)	No Charge
		ATTACHMENTS FOR FIELD CONVERSION	
		Miscellaneous:	
	5MP43052	French Operator's Manual and Decal Kit for Models: AB15, AB16, AE11, AF11, AF12, AG10, AH11, AS10, AS11	0.00

THIS PAGE IS INTENTIONALLY LEFT BLANK

AH11A Round Bale Hugger for Current 800 Series Carrier

Equipment for Base Machine

Capacity:
  1 Round Bale
Hydraulic Service:
  Single Auxiliary
Shipping Weight with Pallet:
  825 lbs.
Operational Weight:
  725 lbs.

Dimensions:
  50H x 57W x 60L

Hydraulic functions on loader attachment require third function hydraulic lines and hoses on loader as well as a tractor with (3) SCV's. Please reference the loader and tractor sales information for additional information.

CODE	ATTACHMENT IDENTIFIER	DESCRIPTION	SUGGESTED LIST PRICE USD ($)
		Select One Code From Each Required Category	
		BASE MACHINE	
2131XF		AH11A Round Bale Hugger for Current 800 Series Carrier *Note: Reference Frontier Loader Attachment Compatibility Chart for specific loader compatibility.*	4,905.00
		ATTACHMENTS - ORDER AS DESIRED	
9200		French Operators Manual and Decal Kit (AH11 Series)	No Charge
		ATTACHMENTS FOR FIELD CONVERSION	
		Miscellaneous:	
	5MP43052	French Operator's Manual and Decal Kit for Models: AB15, AB16, AE11, AF11, AF12, AG10, AH11, AS10, AS11	0.00

THIS PAGE IS INTENTIONALLY LEFT BLANK

AH11D Round Bale Hugger for Current 600/700 Series Carrier

Equipment for Base Machine

Capacity:
  1 Round Bale
Hydraulic Service:
  Single Auxiliary
Shipping Weight with Pallet:
  825 lbs.
Operational Weight:
  725 lbs.

Dimensions:
  50H x 57W x 60L

Hydraulic functions on loader attachment require third function hydraulic lines and hoses on loader as well as a tractor with (3) SCV's. Please reference the loader and tractor sales information for additional information.

CODE	ATTACHMENT IDENTIFIER	DESCRIPTION	SUGGESTED LIST PRICE USD ($)
		Select One Code From Each Required Category	
		BASE MACHINE	
2132XF		AH11D Round Bale Hugger for Current 600/700 Series Carrier *Note: Reference Frontier Loader Attachment Compatibility Chart for specific loader compatibility.*	4,836.00
		ATTACHMENTS - ORDER AS DESIRED	
9200		French Operators Manual and Decal Kit (AH11 Series)	No Charge
		ATTACHMENTS FOR FIELD CONVERSION	
		Miscellaneous:	
	5MP43052	French Operator's Manual and Decal Kit for Models: AB15, AB16, AE11, AF11, AF12, AG10, AH11, AS10, AS11	0.00

THIS PAGE IS INTENTIONALLY LEFT BLANK

AH11G Round Bale Hugger for Current Loaders with Global Carrier

Equipment for Base Machine

Capacity:
  1 Round Bale
Hydraulic Service:
  Single Auxiliary
Shipping Weight with Pallet:
  825 lbs.
Operational Weight:
  725 lbs.

Dimensions:
  50H x 57W x 60L

Hydraulic functions on loader attachment require third function hydraulic lines and hoses on loader as well as a tractor with (3) SCV's. Please reference the loader and tractor sales information for additional information.

CODE	ATTACHMENT IDENTIFIER	DESCRIPTION	SUGGESTED LIST PRICE USD ($)
		Select One Code From Each Required Category	
		BASE MACHINE	
2133XF		AH11G Round Bale Hugger for Current Loaders with Global Carrier *Note: Option is not compatible with Global Category II Carrier. Reference Frontier Loader Attachment Compatibility Chart for specific loader compatibility.*	4,504.00
		ATTACHMENTS - ORDER AS DESIRED	
9200		French Operators Manual and Decal Kit (AH11 Series)	No Charge
		ATTACHMENTS FOR FIELD CONVERSION	
		Miscellaneous:	
	5MP43052	French Operator's Manual and Decal Kit for Models: AB15, AB16, AE11, AF11, AF12, AG10, AH11, AS10, AS11	0.00

THIS PAGE IS INTENTIONALLY LEFT BLANK

AD11H - 60 In. Debris Grapple Bucket for Current 300/400 Series Carrier

Equipment for Base Machine

```
Cutting Width: 60 In.
Loader Series:
  300 and 400 Only (Not 500 Series)
Dimensions:
  W60 In. x H22 In. x D32 In.
Capacity:
  0.3 Cubic Foot Struck
  0.4 Cubic Foot Heaped
Grapple Opening: 32.75 In.
```

```
Operational Weight: 540 lbs.
Shipping Weight: 570 lbs.
```

Hydraulic functions on loader attachment require third function hydraulic lines and hoses on loader as well as a tractor with (3) SCV's. Please reference the loader and tractor sales information for additional information.

CODE	ATTACHMENT IDENTIFIER	DESCRIPTION	SUGGESTED LIST PRICE USD ($)
		Select One Code From Each Required Category	
		BASE MACHINE	
2061XF		AD11H - 60 In. Debris Grapple Bucket for Current 300/400 Series Carrier	3,388.00
		ATTACHMENTS - ORDER AS DESIRED	
9200		French Operators Manual and Decal Kit (AD11 and AD12 Series)	No Charge
		ATTACHMENTS FOR FIELD CONVERSION	
		Miscellaneous:	
	5MP43054	French Operator's Manual and Decal Kit (AD11, AD12, AM11, AR10, AR12, AY11 and AY12)	0.00

THIS PAGE IS INTENTIONALLY LEFT BLANK

AD11E - 72 In. Debris Grapple Bucket for Current 300/400/500 Series Carrier

Equipment for Base Machine

```
Cutting Width: 72 In.
Loader Series:
  300, 400, and 500
Dimensions:
  W72 In. x H22 In. x D32 In.
Capacity:
  0.4 Cubic Foot Struck
  0.5 Cubic Foot Heaped
Grapple Opening: 34.5 In.
```

```
Operational Weight: 615 lbs.
Shipping Weight: 684 lbs.
```

Hydraulic functions on loader attachment require third function hydraulic lines and hoses on loader as well as a tractor with (3) SCV's. Please reference the loader and tractor sales information for additional information.

CODE	ATTACHMENT IDENTIFIER	DESCRIPTION	SUGGESTED LIST PRICE USD ($)
		Select One Code From Each Required Category	
		BASE MACHINE	
2062XF		AD11E - 72 In. Debris Grapple Bucket for Current 300/400/500 Series Carrier *Hydraulic Kit 5MP107610 is required to adapt buckets to 1/2 In. body couplers. 1/2 In. body couplers are standard equipment for 500 series loader 3rd function oil lines and hoses. Order Hydraulic Kit through parts.* *Note: Reference Frontier Loader Attachment Compatibility Chart for specific loader compatibility.*	3,637.00
		ATTACHMENTS - ORDER AS DESIRED	
9200		French Operators Manual and Decal Kit (AD11 and AD12 Series)	No Charge
		ATTACHMENTS FOR FIELD CONVERSION	
		Miscellaneous:	
	5MP43054	French Operator's Manual and Decal Kit (AD11, AD12, AM11, AR10, AR12, AY11 and AY12)	0.00

THIS PAGE IS INTENTIONALLY LEFT BLANK

AD12D - 76 In. Debris Grapple Bucket for Current 600/700 Series Carrier

Equipment for Base Machine

```
Cutting Width: 76 In.
Loader Series:
  600 and 700
Dimensions:
  W77 In. x H29 In. x D41 In.
Capacity:
  0.6 Cubic Foot Struck
  0.7 Cubic Foot Heaped
Grapple Opening: 39.4 In.
```

```
Operational Weight: 1100 lbs.
Shipping Weight: 1150 lbs.
```

Hydraulic functions on loader attachment require third function hydraulic lines and hoses on loader as well as a tractor with (3) SCV's. Please reference the loader and tractor sales information for additional information.

CODE	ATTACHMENT IDENTIFIER	DESCRIPTION	SUGGESTED LIST PRICE USD ($)
		Select One Code From Each Required Category	
		BASE MACHINE	
2071XF		AD12D - 76 In. Debris Grapple Bucket for Current 600/700 Series Carrier	4,766.00
		ATTACHMENTS - ORDER AS DESIRED	
9000		76 In. Debris Bucket Cutting Edge Kit (AD12 Series Only)	432.00
9010		Tooth Bar for 76 In. Debris Bucket with Bolt on Cutting Edge (AD12 Series Only)	811.00
9020		Tooth Bar for 76 In. Debris Bucket without Bolt on Cutting Edge (AD12 Series Only)	579.00
9200		French Operators Manual and Decal Kit (AD11 and AD12 Series)	No Charge
		ATTACHMENTS FOR FIELD CONVERSION	
		Miscellaneous:	
	5FP10123	76 In. Debris Bucket Cutting Edge Kit (AD12 Series Only)	467.89
	5MP43054	French Operator's Manual and Decal Kit (AD11, AD12, AM11, AR10, AR12, AY11 and AY12)	0.00
	5FP10548	Tooth Bar for 76 In. Debris Bucket with Bolt on Cutting Edge (AD12 Series Only)	862.92
	5FP10547	Tooth Bar for 76 In. Debris Bucket without Bolt on Cutting Edge (AD12 Series Only)	625.04

THIS PAGE IS INTENTIONALLY LEFT BLANK

AD12D - 82 In. Debris Grapple Bucket for Current 600/700 Series Carrier

Equipment for Base Machine

```
Cutting Width: 82" In.
Loader Series:
  600 and 700
Dimensions:
  W83 In. x H29 In. x D41 In.
Capacity:
  0.7 Cubic Foot Struck
  0.8 Cubic Foot Heaped
Grapple Opening: 39.4 In.
```

```
Operational Weight: 1150 lbs.
Shipping Weight: 1200 lbs.
```

Hydraulic functions on loader attachment require third function hydraulic lines and hoses on loader as well as a tractor with (3) SCV's. Please reference the loader and tractor sales information for additional information.

CODE	ATTACHMENT IDENTIFIER	DESCRIPTION	SUGGESTED LIST PRICE USD ($)
		Select One Code From Each Required Category	
		BASE MACHINE	
2073XF		AD12D - 82 In. Debris Grapple Bucket for Current 600/700 Series Carrier	5,051.00
		ATTACHMENTS - ORDER AS DESIRED	
9000		82 In. Debris Bucket Cutting Edge Kit (AD12 Series Only)	445.00
9010		Tooth Bar for 82 In. Debris Bucket with Bolt on Cutting Edge (AD12 Series Only)	1,028.00
9020		Tooth Bar for 82 In. Debris Bucket without Bolt on Cutting Edge (AD12 Series Only)	749.00
9200		French Operators Manual and Decal Kit (AD11 and AD12 Series)	No Charge
		ATTACHMENTS FOR FIELD CONVERSION	
		Miscellaneous:	
	5FP10089	82 In. Debris Bucket Cutting Edge Kit (AD12 Series Only)	481.15
	5MP43054	French Operator's Manual and Decal Kit (AD11, AD12, AM11, AR10, AR12, AY11 and AY12)	0.00
	5FP10570	Tooth Bar for 82 In. Debris Bucket with Bolt on Cutting Edge (AD12 Series Only)	1,110.56
	5FP10569	Tooth Bar for 82 In. Debris Bucket without Bolt on Cutting Edge (AD12 Series Only)	797.15

THIS PAGE IS INTENTIONALLY LEFT BLANK

AD12D - 88 In. Debris Grapple Bucket for Current 600/700 Series Carrier

Equipment for Base Machine

```
Cutting Width: 88 In.
Loader Series:
  600 and 700
Dimensions:
  W89 In. x H29 In. x D41 In.
Capacity:
  0.85 Cubic Foot Struck
  1.0 Cubic Foot Heaped
Grapple Opening: 39.4 In.
```

```
Operational Weight: 1200 lbs.
Shipping Weight: 1250 lbs.
```

Hydraulic functions on loader attachment require third function hydraulic lines and hoses on loader as well as a tractor with (3) SCV's. Please reference the loader and tractor sales information for additional information.

CODE	ATTACHMENT IDENTIFIER	DESCRIPTION	SUGGESTED LIST PRICE USD ($)
		Select One Code From Each Required Category	
		BASE MACHINE	
2075XF		AD12D - 88 In. Debris Grapple Bucket for Current 600/700 Series Carrier	5,106.00
		ATTACHMENTS - ORDER AS DESIRED	
9000		88 In. Debris Bucket Cutting Edge Kit (AD12 Series Only)	471.00
9010		Tooth Bar for 88 In. Debris Bucket with Bolt on Cutting Edge (AD12 Series Only)	1,028.00
9020		Tooth Bar for 88 In. Debris Bucket without Bolt on Cutting Edge (AD12 Series Only)	785.00
9200		French Operators Manual and Decal Kit (AD11 and AD12 Series)	No Charge
		ATTACHMENTS FOR FIELD CONVERSION	
		Miscellaneous:	
	5FP10124	88 In. Debris Bucket Cutting Edge Kit (AD12 Series Only)	508.73
	5MP43054	French Operator's Manual and Decal Kit (AD11, AD12, AM11, AR10, AR12, AY11 and AY12)	0.00
	5FP10616	Tooth Bar for 88 In. Debris Bucket with Bolt on Cutting Edge (AD12 Series Only)	1,110.66
	5FP10615	Tooth Bar for 88 In. Debris Bucket without Bolt on Cutting Edge (AD12 Series Only)	847.37

THIS PAGE IS INTENTIONALLY LEFT BLANK

AD12D - 96 In. Debris Grapple Bucket for Current 600/700 Series Carrier

Equipment for Base Machine

```
Cutting Width: 96 In.
Loader Series:
  600 and 700
Dimensions:
  W96 In. x H29 In. x D41 In.
Capacity:
  1.0 Cubic Foot Struck
  1.2 Cubic Foot Heaped
Grapple Opening: 39.4 In.
```

```
Operational Weight: 1250 lbs.
Shipping Weight: 1300 lbs.
```

Hydraulic functions on loader attachment require third function hydraulic lines and hoses on loader as well as a tractor with (3) SCV's. Please reference the loader and tractor sales information for additional information.

CODE	ATTACHMENT IDENTIFIER	DESCRIPTION	SUGGESTED LIST PRICE USD ($)
		Select One Code From Each Required Category	
		BASE MACHINE	
2077XF		AD12D - 96 In. Debris Grapple Bucket for Current 600/700 Series Carrier	5,234.00
		ATTACHMENTS - ORDER AS DESIRED	
9000		96 In. Debris Bucket Cutting Edge Kit (AD12 Series Only)	476.00
9010		Tooth Bar for 96 In. Debris Bucket with Bolt on Cutting Edge (AD12 Series Only)	1,069.00
9020		Tooth Bar for 96 In. Debris Bucket without Bolt on Cutting Edge (AD12 Series Only)	822.00
9200		French Operators Manual and Decal Kit (AD11 and AD12 Series)	No Charge
		ATTACHMENTS FOR FIELD CONVERSION	
		Miscellaneous:	
	5FP10125	96 In. Debris Bucket Cutting Edge Kit (AD12 Series Only)	495.72
	5MP43054	French Operator's Manual and Decal Kit (AD11, AD12, AM11, AR10, AR12, AY11 and AY12)	0.00
	5FP10645	Tooth Bar for 96 In. Debris Bucket with Bolt on Cutting Edge (AD12 Series Only)	1,154.78
	5FP10644	Tooth Bar for 96 In. Debris Bucket without Bolt on Cutting Edge (AD12 Series Only)	888.27

THIS PAGE IS INTENTIONALLY LEFT BLANK

AD12G - 76 In. Debris Grapple Bucket for Current Loaders with Global Carrier

Equipment for Base Machine

```
Cutting Width: 76 In.
Loader Series:
  Global Carrier
Dimensions:
  W77 In. x H29 In. x D39 In.
Capacity:
  0.6 Cubic Foot Struck
  0.7 Cubic Foot Heaped
Grapple Opening: 39.4 In.
```

```
Operational Weight: 1080 lbs.
Shipping Weight: 1130 lbs.
```

Hydraulic functions on loader attachment require third function hydraulic lines and hoses on loader as well as a tractor with (3) SCV's. Please reference the loader and tractor sales information for additional information.

CODE	ATTACHMENT IDENTIFIER	DESCRIPTION	SUGGESTED LIST PRICE USD ($)
		Select One Code From Each Required Category	
		BASE MACHINE	
2072XF		AD12G - 76 In. Debris Grapple Bucket for Current Loaders with Global Carrier *Note: Option is not compatible with Global Category II Carrier. Reference Frontier Loader Attachment Compatibility Chart for specific loader compatibility.*	4,720.00
		ATTACHMENTS - ORDER AS DESIRED	
9000		76 In. Debris Bucket Cutting Edge Kit (AD12 Series Only)	432.00
9010		Tooth Bar for 76 In. Debris Bucket with Bolt on Cutting Edge (AD12 Series Only)	811.00
9020		Tooth Bar for 76 In. Debris Bucket without Bolt on Cutting Edge (AD12 Series Only)	579.00
9200		French Operators Manual and Decal Kit (AD11 and AD12 Series)	No Charge
		ATTACHMENTS FOR FIELD CONVERSION	
		Miscellaneous:	
	5FP10123	76 In. Debris Bucket Cutting Edge Kit (AD12 Series Only)	467.89
	5MP43054	French Operator's Manual and Decal Kit (AD11, AD12, AM11, AR10, AR12, AY11 and AY12)	0.00
	5FP10548	Tooth Bar for 76 In. Debris Bucket with Bolt on Cutting Edge (AD12 Series Only)	862.92
	5FP10547	Tooth Bar for 76 In. Debris Bucket without Bolt on Cutting Edge (AD12 Series Only)	625.04

THIS PAGE IS INTENTIONALLY LEFT BLANK

AD12G - 82 In. Debris Grapple Bucket for Current Loaders with Global Carrier

Equipment for Base Machine

```
Cutting Width: 82 In.
Loader Series:
  Global Carrier
Dimensions:
  W83 In. x H29 In. x D39 In.
Capacity:
  0.7 Cubic Foot Struck
  0.8 Cubic Foot Heaped
Grapple Opening: 39.4 In.
```

```
Operational Weight: 1130 lbs.
Shipping Weight: 1180 lbs.
```

Hydraulic functions on loader attachment require third function hydraulic lines and hoses on loader as well as a tractor with (3) SCV's. Please reference the loader and tractor sales information for additional information.

CODE	ATTACHMENT IDENTIFIER	DESCRIPTION	SUGGESTED LIST PRICE USD ($)
		Select One Code From Each Required Category	
		BASE MACHINE	
2074XF		AD12G - 82 In. Debris Grapple Bucket for Current Loaders with Global Carrier *Note: Option is not compatible with Global Category II Carrier. Reference Frontier Loader Attachment Compatibility Chart for specific loader compatibility.*	4,906.00
		ATTACHMENTS - ORDER AS DESIRED	
9000		82 In. Debris Bucket Cutting Edge Kit (AD12 Series Only)	445.00
9010		Tooth Bar for 82 In. Debris Bucket with Bolt on Cutting Edge (AD12 Series Only)	1,028.00
9020		Tooth Bar for 82 In. Debris Bucket without Bolt on Cutting Edge (AD12 Series Only)	749.00
9200		French Operators Manual and Decal Kit (AD11 and AD12 Series)	No Charge
		ATTACHMENTS FOR FIELD CONVERSION	
		Miscellaneous:	
	5FP10089	82 In. Debris Bucket Cutting Edge Kit (AD12 Series Only)	481.15
	5MP43054	French Operator's Manual and Decal Kit (AD11, AD12, AM11, AR10, AR12, AY11 and AY12)	0.00
	5FP10570	Tooth Bar for 82 In. Debris Bucket with Bolt on Cutting Edge (AD12 Series Only)	1,110.56
	5FP10569	Tooth Bar for 82 In. Debris Bucket without Bolt on Cutting Edge (AD12 Series Only)	797.15

THIS PAGE IS INTENTIONALLY LEFT BLANK

AD12G - 88 In. Debris Grapple Bucket for Current Loaders with Global Carrier

Equipment for Base Machine

```
Cutting Width: 88 In.
Loader Series:
  Global Carrier
Dimensions:
  W89 In. x H29 In. x D39 In.
Capacity:
  0.85 Cubic Foot Struck
  1.0 Cubic Foot Heaped
Grapple Opening: 39.4 In.
```

```
Operational Weight: 1180 lbs.
Shipping Weight: 1230 lbs.
```

Hydraulic functions on loader attachment require third function hydraulic lines and hoses on loader as well as a tractor with (3) SCV's. Please reference the loader and tractor sales information for additional information.

CODE	ATTACHMENT IDENTIFIER	DESCRIPTION	SUGGESTED LIST PRICE USD ($)
		Select One Code From Each Required Category	
		BASE MACHINE	
2076XF		AD12G - 88 In. Debris Grapple Bucket for Current Loaders with Global Carrier *Note: Option is not compatible with Global Category II Carrier. Reference Frontier Loader Attachment Compatibility Chart for specific loader compatibility.*	5,118.00
		ATTACHMENTS - ORDER AS DESIRED	
9000		88 In. Debris Bucket Cutting Edge Kit (AD12 Series Only)	471.00
9010		Tooth Bar for 88 In. Debris Bucket with Bolt on Cutting Edge (AD12 Series Only)	1,028.00
9200		French Operators Manual and Decal Kit (AD11 and AD12 Series)	No Charge
9020		Tooth Bar for 88 In. Debris Bucket without Bolt on Cutting Edge (AD12 Series Only)	785.00
		ATTACHMENTS FOR FIELD CONVERSION	
		Miscellaneous:	
	5FP10124	88 In. Debris Bucket Cutting Edge Kit (AD12 Series Only)	508.73
	5MP43054	French Operator's Manual and Decal Kit (AD11, AD12, AM11, AR10, AR12, AY11 and AY12)	0.00
	5FP10616	Tooth Bar for 88 In. Debris Bucket with Bolt on Cutting Edge (AD12 Series Only)	1,110.66
	5FP10615	Tooth Bar for 88 In. Debris Bucket without Bolt on Cutting Edge (AD12 Series Only)	847.37

THIS PAGE IS INTENTIONALLY LEFT BLANK

AD12G - 96 In. Debris Grapple Bucket for Current Loaders with Global Carrier

Equipment for Base Machine

```
Cutting Width: 96 In.
Loader Series:
  Global Carrier
Dimensions:
  W96 In. x H29 In. x D39 In.
Capacity:
  1.0 Cubic Foot Struck
  1.2 Cubic Foot Heaped
Grapple Opening: 39.4 In.
```

```
Operational Weight: 1230 lbs.
Shipping Weight: 1280 lbs.
```

Hydraulic functions on loader attachment require third function hydraulic lines and hoses on loader as well as a tractor with (3) SCV's. Please reference the loader and tractor sales information for additional information.

CODE	ATTACHMENT IDENTIFIER	DESCRIPTION	SUGGESTED LIST PRICE USD ($)
		Select One Code From Each Required Category	
		BASE MACHINE	
2078XF		AD12G - 96 In. Debris Grapple Bucket for Current Loaders with Global Carrier *Note: Option is not compatible with Global Category II Carrier. Reference Frontier Loader Attachment Compatibility Chart for specific loader compatibility.*	5,121.00
		ATTACHMENTS - ORDER AS DESIRED	
9000		96 In. Debris Bucket Cutting Edge Kit (AD12 Series Only)	476.00
9010		Tooth Bar for 96 In. Debris Bucket with Bolt on Cutting Edge (AD12 Series Only)	1,069.00
9020		Tooth Bar for 96 In. Debris Bucket without Bolt on Cutting Edge (AD12 Series Only)	822.00
9200		French Operators Manual and Decal Kit (AD11 and AD12 Series)	No Charge
		ATTACHMENTS FOR FIELD CONVERSION	
		Miscellaneous:	
	5FP10125	96 In. Debris Bucket Cutting Edge Kit (AD12 Series Only)	495.72
	5MP43054	French Operator's Manual and Decal Kit (AD11, AD12, AM11, AR10, AR12, AY11 and AY12)	0.00
	5FP10645	Tooth Bar for 96 In. Debris Bucket with Bolt on Cutting Edge (AD12 Series Only)	1,154.78
	5FP10644	Tooth Bar for 96 In. Debris Bucket without Bolt on Cutting Edge (AD12 Series Only)	888.27

THIS PAGE IS INTENTIONALLY LEFT BLANK

AE11E - 60 In. Free Stall Scraper for Current 300/400/500 Series Carrier

Equipment for Base Machine

Cutting Width: 60 In.
Loader Series:
  300, 400, and 500
Dimensions:
  W60 In. x H28 In. x D29 In.
Optional Bolt-on Backdrag Weight:
  138 lbs.
Operational Weight: 240 lbs.

Shipping Weight: 290 lbs.

CODE	ATTACHMENT IDENTIFIER	DESCRIPTION	SUGGESTED LIST PRICE USD ($)
		Select One Code From Each Required Category	
		BASE MACHINE	
2081XF		AE11E - 60 In. Free Stall Scraper for Current 300/400/500 Series Carrier *Note: Reference Frontier Loader Attachment Compatibility Chart for specific loader compatibility.*	1,446.00
		ATTACHMENTS - ORDER AS DESIRED	
9000		60 In. Back Drag Attachment (AE11E)	559.00
9200		French Operators Manual and Decal Kit (AE11 Series)	No Charge
		ATTACHMENTS FOR FIELD CONVERSION	
		Miscellaneous:	
	5FP10736	60 In. Back Drag Attachment (AE11E)	603.72
	5MP43052	French Operator's Manual and Decal Kit for Models: AB15, AB16, AE11, AF11, AF12, AG10, AH11, AS10, AS11	0.00

THIS PAGE IS INTENTIONALLY LEFT BLANK

AE11E - 72 In. Free Stall Scraper for Current 300/400/500 Series Carrier

Equipment for Base Machine

```
Cutting Width: 72 In.
Loader Series:
  300, 400, and 500
Dimensions:
  W72 In. x H28 In. x D29 In.
Optional Bolt-on Backdrag Weight:
  161 lbs.
Operational Weight: 265 lbs.
```

```
Shipping Weight: 315 lbs.
```

CODE	ATTACHMENT IDENTIFIER	DESCRIPTION	SUGGESTED LIST PRICE USD ($)
		Select One Code From Each Required Category	
		BASE MACHINE	
2082XF		AE11E - 72 In. Free Stall Scraper for Current 300/400/500 Series Carrier *Note: Reference Frontier Loader Attachment Compatibility Chart for specific loader compatibility.*	1,674.00
		ATTACHMENTS - ORDER AS DESIRED	
9000		72 In. Back Drag Attachment (AE11E)	581.00
9200		French Operators Manual and Decal Kit (AE11 Series)	No Charge
		ATTACHMENTS FOR FIELD CONVERSION	
		Miscellaneous:	
	5FP10737	72 In. Back Drag Attachment (AE11E)	627.48
	5MP43052	French Operator's Manual and Decal Kit for Models: AB15, AB16, AE11, AF11, AF12, AG10, AH11, AS10, AS11	0.00

THIS PAGE IS INTENTIONALLY LEFT BLANK

AE11E - 84 In. Free Stall Scraper for Current 300/400/500 Series Carrier

Equipment for Base Machine

```
Cutting Width: 84 In.
Loader Series:
  300, 400, and 500
Dimensions:
  W84 In. x H28 In. x D29 In.
Optional Bolt-on Backdrag Weight:
  194 lbs.
Operational Weight: 285 lbs.
```

```
Shipping Weight: 335 lbs.
```

CODE	ATTACHMENT IDENTIFIER	DESCRIPTION	SUGGESTED LIST PRICE USD ($)
		Select One Code From Each Required Category	
		BASE MACHINE	
2083XF		AE11E - 84 In. Free Stall Scraper for Current 300/400/500 Series Carrier *Note: Reference Frontier Loader Attachment Compatibility Chart for specific loader compatibility.*	1,691.00
		ATTACHMENTS - ORDER AS DESIRED	
9000		84 In. Back Drag Attachment (AE11E)	732.00
9200		French Operators Manual and Decal Kit (AE11 Series)	No Charge
		ATTACHMENTS FOR FIELD CONVERSION	
		Miscellaneous:	
	5FP10738	84 In. Back Drag Attachment (AE11E)	790.56
	5MP43052	French Operator's Manual and Decal Kit for Models: AB15, AB16, AE11, AF11, AF12, AG10, AH11, AS10, AS11	0.00

THIS PAGE IS INTENTIONALLY LEFT BLANK

AE11E - 96 In. Free Stall Scraper for Current 300/400/500 Series Carrier

Equipment for Base Machine

```
Cutting Width: 96 In.
Loader Series:
  300, 400, and 500
Dimensions:
  W96 In. x H28 In. x D29 In.
Optional Bolt-on Backdrag Weight:
  226 lbs.
Operational Weight: 305 lbs.
```

```
Shipping Weight: 355 lbs.
```

CODE	ATTACHMENT IDENTIFIER	DESCRIPTION	SUGGESTED LIST PRICE USD ($)
		Select One Code From Each Required Category	
		BASE MACHINE	
2084XF		AE11E - 96 In. Free Stall Scraper for Current 300/400/500 Series Carrier *Note: Reference Frontier Loader Attachment Compatibility Chart for specific loader compatibility.*	1,735.00
		ATTACHMENTS - ORDER AS DESIRED	
9000		96 In. Back Drag Attachment (AE11E)	775.00
9200		French Operators Manual and Decal Kit (AE11 Series)	No Charge
		ATTACHMENTS FOR FIELD CONVERSION	
		Miscellaneous:	
	5FP10739	96 In. Back Drag Attachment (AE11E)	837.00
	5MP43052	French Operator's Manual and Decal Kit for Models: AB15, AB16, AE11, AF11, AF12, AG10, AH11, AS10, AS11	0.00

THIS PAGE IS INTENTIONALLY LEFT BLANK

AF11E - 6 Ft. Boom Mounted Front Blade with Manual Angle for Current 300/400/500 Series Carrier

Equipment for Base Machine

```
Cutting Width: 6 Ft.
Loader Series:
  300, 400, and 500
Dimensions:
  W72 In. x H23 In. x D34 In.
Operational Weight: 400 lbs.
Shipping Weight: 430 lbs.
```

Hydraulic functions on loader attachment require third function hydraulic lines and hoses on loader as well as a tractor with (3) SCV's. Please reference the loader and tractor sales information for additional information.

CODE	ATTACHMENT IDENTIFIER	DESCRIPTION	SUGGESTED LIST PRICE USD ($)
		Select One Code From Each Required Category	
		BASE MACHINE	
2091XF		AF11E - 6 Ft. Boom Mounted Front Blade with Manual Angle for Current 300/400/500 Series Carrier *Note: Reference Frontier Loader Attachment Compatibility Chart for specific loader compatibility.*	2,331.00
		ATTACHMENTS - ORDER AS DESIRED	
9000		Hydraulic angle Kit for 6 Ft. and 7 Ft. AF11E	512.00
9020		Rubber Edge Kit for 6 Ft. AF11E	464.00
9200		French Operators Manual and Decal Kit (AF11 and AF12 Series)	No Charge
		ATTACHMENTS FOR FIELD CONVERSION	
		Miscellaneous:	
	5MP43052	French Operator's Manual and Decal Kit for Models: AB15, AB16, AE11, AF11, AF12, AG10, AH11, AS10, AS11	0.00
	5FP10726	Hydraulic Angle Kit for 6 Ft. and 7 Ft. AF11E	553.44
	5FPLAF6486	Rubber Edge Kit for 6 Ft. AF11E	501.53

THIS PAGE IS INTENTIONALLY LEFT BLANK

AF11E - 7 Ft. Boom Mounted Front Blade with Manual Angle for Current 300/400/500 Series Carrier

Equipment for Base Machine

```
Cutting Width: 7 Ft.
Loader Series:
  300, 400, and 500
Dimensions:
  W84 In. x H23 In. x D34 In.
Operational Weight: 450 lbs.
Shipping Weight: 480 lbs.
```

Hydraulic functions on loader attachment require third function hydraulic lines and hoses on loader as well as a tractor with (3) SCV's. Please reference the loader and tractor sales information for additional information.

CODE	ATTACHMENT IDENTIFIER	DESCRIPTION	SUGGESTED LIST PRICE USD ($)
		Select One Code From Each Required Category	
		BASE MACHINE	
2093XF		AF11E - 7 Ft. Boom Mounted Front Blade with Manual Angle for Current 300/400/500 Series Carrier *Note: Reference Frontier Loader Attachment Compatibility Chart for specific loader compatibility.*	2,366.00
		ATTACHMENTS - ORDER AS DESIRED	
9000		Hydraulic angle Kit for 6 Ft. and 7 Ft. AF11E	512.00
9020		Rubber Edge Kit for 7 Ft. AF11E	498.00
9200		French Operators Manual and Decal Kit (AF11 and AF12 Series)	No Charge
		ATTACHMENTS FOR FIELD CONVERSION	
		Miscellaneous:	
	5MP43052	French Operator's Manual and Decal Kit for Models: AB15, AB16, AE11, AF11, AF12, AG10, AH11, AS10, AS11	0.00
	5FP10726	Hydraulic Angle Kit for 6 Ft. and 7 Ft. AF11E	553.44
	5FPLAF6487	Rubber Edge Kit for 7 Ft. AF11E	537.84

THIS PAGE IS INTENTIONALLY LEFT BLANK

AF11D - 7 Ft. Boom Mounted Front Blade with Hydraulic Angle for Current 600/700 Series Carrier

Equipment for Base Machine

```
Cutting Width: 7 Ft.                                  Shipping Weight: 780 lbs.
Loader Series:
  600 Series Loaders
  on 6000 Series Tractors
Dimensions:
  W84 In. x H32 In. x D48 In.
Operational Weight: 730 lbs.
```

Hydraulic functions on loader attachment require third function hydraulic lines and hoses on loader as well as a tractor with (3) SCV's. Please reference the loader and tractor sales information for additional information.

CODE	ATTACHMENT IDENTIFIER	DESCRIPTION	SUGGESTED LIST PRICE USD ($)
		Select One Code From Each Required Category	
		BASE MACHINE	
2092XF		AF11D - 7 Ft. Boom Mounted Front Blade with Hydraulic Angle for Current 600/700 Series Carrier *ONLY 6000 series tractors.* *Note: Reference Frontier Loader Attachment Compatibility Chart for specific loader compatibility.*	4,557.00
		ATTACHMENTS - ORDER AS DESIRED	
9010		Rubber Top Flap Kit for 7 Ft. AF11D and AF11G	192.00
9020		Rubber Edge Kit for 7 Ft. AF11D and AF11G	575.00
9200		French Operators Manual and Decal Kit (AF11 and AF12 Series)	No Charge
		ATTACHMENTS FOR FIELD CONVERSION	
		Miscellaneous:	
	5MP43052	French Operator's Manual and Decal Kit for Models: AB15, AB16, AE11, AF11, AF12, AG10, AH11, AS10, AS11	0.00
	5FPLAF1551	Rubber Edge Kit for 7 Ft. AF11D and AF11G	621.00
	5FPLAF6492	Rubber Top Flap Kit for 7 Ft. AF11D and AF11G	208.11

THIS PAGE IS INTENTIONALLY LEFT BLANK

AF11D - 8 Ft. Boom Mounted Front Blade with Hydraulic Angle for Current 600/700 Series Carrier

Equipment for Base Machine

```
Cutting Width: 8 Ft.                                  Shipping Weight: 1245 lbs.
Loader Series:
  600 Series Loaders
  on 6000 Series Tractors
Dimensions:
  W96 In. x H32 In. x D54 In.
Operational Weight: 1195 lbs.
```

Hydraulic functions on loader attachment require third function hydraulic lines and hoses on loader as well as a tractor with (3) SCV's. Please reference the loader and tractor sales information for additional information.

CODE	ATTACHMENT IDENTIFIER	DESCRIPTION	SUGGESTED LIST PRICE USD ($)
		Select One Code From Each Required Category	
		BASE MACHINE	
2095XF		AF11D - 8 Ft. Boom Mounted Front Blade with Hydraulic Angle for Current 600/700 Series Carrier *ONLY 6000 series tractors.* *Note: Reference Frontier Loader Attachment Compatibility Chart for specific loader compatibility.*	4,573.00
		ATTACHMENTS - ORDER AS DESIRED	
9010		Rubber Top Flap Kit for 8 Ft. AF11D, AF11G, AF12D and AF12G	207.00
9020		Rubber Edge Kit for 8 Ft. AF11D, AF11G, AF12D and AF12G	637.00
9200		French Operators Manual and Decal Kit (AF11 and AF12 Series)	No Charge
		ATTACHMENTS FOR FIELD CONVERSION	
		Miscellaneous:	
	5MP43052	French Operator's Manual and Decal Kit for Models: AB15, AB16, AE11, AF11, AF12, AG10, AH11, AS10, AS11	0.00
	5FPLAF1552	Rubber Edge Kit for 8 Ft. AF11D, AF11G, AF12D and AF12G	688.60
	5FPLAF6493	Rubber Top Flap Kit for 8 Ft. AF11D, AF11G, AF12D and AF12G	224.46

THIS PAGE IS INTENTIONALLY LEFT BLANK

AF11G - 7 Ft. Boom Mounted Front Blade with Hydraulic Angle for Current Loaders with Global Carrier

Equipment for Base Machine

```
Cutting Width: 7 Ft.
Loader Series:
  Global Carrier on 6000 Series Tractors
Dimensions:
  W84 In. x H32 In. x D48 In.
Operational Weight: 710 lbs.
Shipping Weight: 760 lbs.
```

Hydraulic functions on loader attachment require third function hydraulic lines and hoses on loader as well as a tractor with (3) SCV's. Please reference the loader and tractor sales information for additional information.

CODE	ATTACHMENT IDENTIFIER	DESCRIPTION	SUGGESTED LIST PRICE USD ($)
		Select One Code From Each Required Category	
		BASE MACHINE	
2094XF		AF11G - 7 Ft. Boom Mounted Front Blade with Hydraulic Angle for Current Loaders with Global Carrier *ONLY 6000 series tractors and smaller.* *Note: Option is not compatible with Global Category II Carrier. Reference Frontier Loader Attachment Compatibility Chart for specific loader compatibility.*	4,276.00
		ATTACHMENTS - ORDER AS DESIRED	
9010		Rubber Top Flap Kit for 7 Ft. AF11D and AF11G	192.00
9020		Rubber Edge Kit for 7 Ft. AF11D and AF11G	575.00
9200		French Operators Manual and Decal Kit (AF11 and AF12 Series)	No Charge
		ATTACHMENTS FOR FIELD CONVERSION	
		Miscellaneous:	
	5MP43052	French Operator's Manual and Decal Kit for Models: AB15, AB16, AE11, AF11, AF12, AG10, AH11, AS10, AS11	0.00
	5FPLAF1551	Rubber Edge Kit for 7 Ft. AF11D and AF11G	621.00
	5FPLAF6492	Rubber Top Flap Kit for 7 Ft. AF11D and AF11G	208.11

THIS PAGE IS INTENTIONALLY LEFT BLANK

AF11G - 8 Ft. Boom Mounted Front Blade with Hydraulic Angle for Current Loaders with Global Carrier

Equipment for Base Machine

```
Cutting Width: 8 Ft.
Loader Series:
  Global Carrier on 6000 Series Tractors
Dimensions:
  W96 In. x H32 In. x D54 In.
Operational Weight: 1175 lbs.
Shipping Weight: 1225 lbs.
```

Hydraulic functions on loader attachment require third function hydraulic lines and hoses on loader as well as a tractor with (3) SCV's. Please reference the loader and tractor sales information for additional information.

CODE	ATTACHMENT IDENTIFIER	DESCRIPTION	SUGGESTED LIST PRICE USD ($)
		Select One Code From Each Required Category	
		BASE MACHINE	
2096XF		AF11G - 8 Ft. Boom Mounted Front Blade with Hydraulic Angle for Current Loaders with Global Carrier *ONLY 6000 series tractors and smaller.* *Note: Option is not compatible with Global Category II Carrier. Reference Frontier Loader Attachment Compatibility Chart for specific loader compatibility.*	4,687.00
		ATTACHMENTS - ORDER AS DESIRED	
9010		Rubber Top Flap Kit for 8 Ft. AF11D, AF11G, AF12D and AF12G	207.00
9020		Rubber Edge Kit for 8 Ft. AF11D, AF11G, AF12D and AF12G	637.00
9200		French Operators Manual and Decal Kit (AF11 and AF12 Series)	No Charge
		ATTACHMENTS FOR FIELD CONVERSION	
		Miscellaneous:	
	5MP43052	French Operator's Manual and Decal Kit for Models: AB15, AB16, AE11, AF11, AF12, AG10, AH11, AS10, AS11	0.00
	5FPLAF1552	Rubber Edge Kit for 8 Ft. AF11D, AF11G, AF12D and AF12G	688.60
	5FPLAF6493	Rubber Top Flap Kit for 8 Ft. AF11D, AF11G, AF12D and AF12G	224.46

THIS PAGE IS INTENTIONALLY LEFT BLANK

AF12D - 8 Ft. Boom Mounted Front Blade with Hydraulic Angle for Current 600/700 Series Carrier

Equipment for Base Machine

```
Cutting Width: 8 Ft.
Loader Series:
  600 and 700
Dimensions:
  W96 In. x H32 In. x D54 In.
Operational Weight: 1195 lbs.
Shipping Weight: 1245 lbs.
```

Hydraulic functions on loader attachment require third function hydraulic lines and hoses on loader as well as a tractor with (3) SCV's. Please reference the loader and tractor sales information for additional information.

CODE	ATTACHMENT IDENTIFIER	DESCRIPTION	SUGGESTED LIST PRICE USD ($)
		Select One Code From Each Required Category	
		BASE MACHINE	
2101XF		AF12D - 8 Ft. Boom Mounted Front Blade with Hydraulic Angle for Current 600/700 Series Carrier *Note: Reference Frontier Loader Attachment Compatibility Chart for specific loader compatibility.*	5,883.00
		ATTACHMENTS - ORDER AS DESIRED	
9010		Rubber Top Flap Kit for 8 Ft. AF11D, AF11G, AF12D and AF12G	207.00
9020		Rubber Edge Kit for 8 Ft. AF11D, AF11G, AF12D and AF12G	637.00
9200		French Operators Manual and Decal Kit (AF11 and AF12 Series)	No Charge
		ATTACHMENTS FOR FIELD CONVERSION	
		Miscellaneous:	
	5MP43052	French Operator's Manual and Decal Kit for Models: AB15, AB16, AE11, AF11, AF12, AG10, AH11, AS10, AS11	0.00
	5FPLAF1552	Rubber Edge Kit for 8 Ft. AF11D, AF11G, AF12D and AF12G	688.60
	5FPLAF6493	Rubber Top Flap Kit for 8 Ft. AF11D, AF11G, AF12D and AF12G	224.46

THIS PAGE IS INTENTIONALLY LEFT BLANK

AF12D - 9 Ft. Boom Mounted Front Blade with Hydraulic Angle for Current 600/700 Series Carrier

Equipment for Base Machine

```
Cutting Width: 9 Ft.
Loader Series:
  600 and 700
Dimensions:
  W96 In. x H32 In. x D54 In.
Operational Weight: 1195 lbs.
Shipping Weight: 1245 lbs.
```

Hydraulic functions on loader attachment require third function hydraulic lines and hoses on loader as well as a tractor with (3) SCV's. Please reference the loader and tractor sales information for additional information.

CODE	ATTACHMENT IDENTIFIER	DESCRIPTION	SUGGESTED LIST PRICE USD ($)
		Select One Code From Each Required Category	
		BASE MACHINE	
2103XF		AF12D - 9 Ft. Boom Mounted Front Blade with Hydraulic Angle for Current 600/700 Series Carrier *Note: Reference Frontier Loader Attachment Compatibility Chart for specific loader compatibility.*	6,579.00
		ATTACHMENTS - ORDER AS DESIRED	
9010		Rubber Top Flap Kit for 9 Ft. AF12D and AF12G	223.00
9020		Rubber Edge Kit for 9 Ft. AF12D and AF12G	697.00
9200		French Operators Manual and Decal Kit (AF11 and AF12 Series)	No Charge
		ATTACHMENTS FOR FIELD CONVERSION	
		Miscellaneous:	
	5MP43052	French Operator's Manual and Decal Kit for Models: AB15, AB16, AE11, AF11, AF12, AG10, AH11, AS10, AS11	0.00
	5FPLAF1553	Rubber Edge Kit for 9 Ft. AF12D and AF12G	752.84
	5FPLAF6494	Rubber Top Flap Kit for 9 Ft. AF12D and AF12G	240.84

THIS PAGE IS INTENTIONALLY LEFT BLANK

AF12D - 10 Ft. Boom Mounted Front Blade with Hydraulic Angle for Current 600/700 Series Carrier

Equipment for Base Machine

```
Cutting Width: 10 Ft.
Loader Series:
  600 and 700
Dimensions:
  W96 In. x H32 In. x D54 In.
Operational Weight: 1195 lbs.
Shipping Weight: 1245 lbs.
```

Hydraulic functions on loader attachment require third function hydraulic lines and hoses on loader as well as a tractor with (3) SCV's. Please reference the loader and tractor sales information for additional information.

CODE	ATTACHMENT IDENTIFIER	DESCRIPTION	SUGGESTED LIST PRICE USD ($)
		Select One Code From Each Required Category	
		BASE MACHINE	
2105XF		AF12D - 10 Ft. Boom Mounted Front Blade with Hydraulic Angle for Current 600/700 Series Carrier *Note: Reference Frontier Loader Attachment Compatibility Chart for specific loader compatibility.*	6,771.00
		ATTACHMENTS - ORDER AS DESIRED	
9010		Rubber Top Flap Kit for 10 Ft. AF12D and AF12G	237.00
9020		Rubber Edge Kit for 10 Ft. AF12D and AF12G	757.00
9200		French Operators Manual and Decal Kit (AF11 and AF12 Series)	No Charge
		ATTACHMENTS FOR FIELD CONVERSION	
		Miscellaneous:	
	5MP43052	French Operator's Manual and Decal Kit for Models: AB15, AB16, AE11, AF11, AF12, AG10, AH11, AS10, AS11	0.00
	5FPLAF1554	Rubber Edge Kit for 10 Ft. AF12D and AF12G	818.32
	5FPLAF6495	Rubber Top Flap Kit for 10 Ft. AF12D and AF12G	256.04

THIS PAGE IS INTENTIONALLY LEFT BLANK

AF12G - 8 Ft. Boom Mounted Front Blade with Hydraulic Angle for Current Loaders with Global Carrier

Equipment for Base Machine

```
Cutting Width: 8 Ft.
Loader Series:
  Global Carrier
Dimensions:
  W96 In. x H32 In. x D54 In.
Operational Weight: 1175 lbs.
Shipping Weight: 1225 lbs.
```

Hydraulic functions on loader attachment require third function hydraulic lines and hoses on loader as well as a tractor with (3) SCV's. Please reference the loader and tractor sales information for additional information.

CODE	ATTACHMENT IDENTIFIER	DESCRIPTION	SUGGESTED LIST PRICE USD ($)
		Select One Code From Each Required Category	
		BASE MACHINE	
2102XF		AF12G - 8 Ft. Boom Mounted Front Blade with Hydraulic Angle for Current Loaders with Global Carrier *Note: Option is not compatible with Global Category II Carrier. Reference Frontier Loader Attachment Compatibility Chart for specific loader compatibility.*	5,364.00
		ATTACHMENTS - ORDER AS DESIRED	
9010		Rubber Top Flap Kit for 8 Ft. AF11D, AF11G, AF12D and AF12G	207.00
9020		Rubber Edge Kit for 8 Ft. AF11D, AF11G, AF12D and AF12G	637.00
9200		French Operators Manual and Decal Kit (AF11 and AF12 Series)	No Charge
		ATTACHMENTS FOR FIELD CONVERSION	
		Miscellaneous:	
	5MP43052	French Operator's Manual and Decal Kit for Models: AB15, AB16, AE11, AF11, AF12, AG10, AH11, AS10, AS11	0.00
	5FPLAF1552	Rubber Edge Kit for 8 Ft. AF11D, AF11G, AF12D and AF12G	688.60
	5FPLAF6493	Rubber Top Flap Kit for 8 Ft. AF11D, AF11G, AF12D and AF12G	224.46

THIS PAGE IS INTENTIONALLY LEFT BLANK

AF12G - 9 Ft. Boom Mounted Front Blade with Hydraulic Angle for Current Loaders with Global Carrier

Equipment for Base Machine

```
Cutting Width: 9 Ft.
Loader Series:
  Global Carrier
Dimensions:
  W96 In. x H32 In. x D54 In.
Operational Weight: 1175 lbs.
Shipping Weight: 1225 lbs.
```

Hydraulic functions on loader attachment require third function hydraulic lines and hoses on loader as well as a tractor with (3) SCV's. Please reference the loader and tractor sales information for additional information.

CODE	ATTACHMENT IDENTIFIER	DESCRIPTION	SUGGESTED LIST PRICE USD ($)
		Select One Code From Each Required Category	
		BASE MACHINE	
2104XF		AF12G - 9 Ft. Boom Mounted Front Blade with Hydraulic Angle for Current Loaders with Global Carrier *Note: Option is not compatible with Global Category II Carrier. Reference Frontier Loader Attachment Compatibility Chart for specific loader compatibility.*	5,880.00
		ATTACHMENTS - ORDER AS DESIRED	
9010		Rubber Top Flap Kit for 9 Ft. AF12D and AF12G	223.00
9020		Rubber Edge Kit for 9 Ft. AF12D and AF12G	697.00
9200		French Operators Manual and Decal Kit (AF11 and AF12 Series)	No Charge
		ATTACHMENTS FOR FIELD CONVERSION	
		Miscellaneous:	
	5MP43052	French Operator's Manual and Decal Kit for Models: AB15, AB16, AE11, AF11, AF12, AG10, AH11, AS10, AS11	0.00
	5FPLAF1553	Rubber Edge Kit for 9 Ft. AF12D and AF12G	752.84
	5FPLAF6494	Rubber Top Flap Kit for 9 Ft. AF12D and AF12G	240.84

THIS PAGE IS INTENTIONALLY LEFT BLANK

AF12G - 10 Ft. Boom Mounted Front Blade with Hydraulic Angle for Current Loaders with Global Carrier

Equipment for Base Machine

```
Cutting Width: 10 Ft.
Loader Series:
  Global Carrier
Dimensions:
  W96 In. x H32 In. x D54 In.
Operational Weight: 1175 lbs.
Shipping Weight: 1225 lbs.
```

Hydraulic functions on loader attachment require third function hydraulic lines and hoses on loader as well as a tractor with (3) SCV's. Please reference the loader and tractor sales information for additional information.

CODE	ATTACHMENT IDENTIFIER	DESCRIPTION	SUGGESTED LIST PRICE USD ($)
		Select One Code From Each Required Category	
		BASE MACHINE	
2106XF		AF12G - 10 Ft. Boom Mounted Front Blade with Hydraulic Angle for Current Loaders with Global Carrier *Note: Option is not compatible with Global Category II Carrier. Reference Frontier Loader Attachment Compatibility Chart for specific loader compatibility.*	6,209.00
		ATTACHMENTS - ORDER AS DESIRED	
9010		Rubber Top Flap Kit for 10 Ft. AF12D and AF12G	237.00
9020		Rubber Edge Kit for 10 Ft. AF12D and AF12G	757.00
9200		French Operators Manual and Decal Kit (AF11 and AF12 Series)	No Charge
		ATTACHMENTS FOR FIELD CONVERSION	
		Miscellaneous:	
	5MP43052	French Operator's Manual and Decal Kit for Models: AB15, AB16, AE11, AF11, AF12, AG10, AH11, AS10, AS11	0.00
	5FPLAF1554	Rubber Edge Kit for 10 Ft. AF12D and AF12G	818.32
	5FPLAF6495	Rubber Top Flap Kit for 10 Ft. AF12D and AF12G	256.04

THIS PAGE IS INTENTIONALLY LEFT BLANK

AM11H - 60 In. Manure Fork with Grapple for Current 300CX/400 Series Carrier

Equipment for Base Machine

```
Cutting Width: 60 In.                                Shipping Weight: 507 lbs.
Loader Series:
  300 and 400 Only (Not 500 Series)
Dimensions:
  W60 In. x H26.5 In. x D34 In.
Grapple Opening: 37 In.
Operational Weight: 457 lbs.
```

Hydraulic functions on loader attachment require third function hydraulic lines and hoses on loader as well as a tractor with (3) SCV's. Please reference the loader and tractor sales information for additional information.

CODE	ATTACHMENT IDENTIFIER	DESCRIPTION	SUGGESTED LIST PRICE USD ($)
		Select One Code From Each Required Category	
		BASE MACHINE	
2141XF		AM11H - 60 In. Manure Fork with Grapple for Current 300CX/400 Series Carrier *Note: Reference Frontier Loader Attachment Compatibility Chart for specific loader compatibility.*	2,738.00
		ATTACHMENTS - ORDER AS DESIRED	
9200		French Operators Manual and Decal Kit (AM11 Series)	No Charge
		ATTACHMENTS FOR FIELD CONVERSION	
		Miscellaneous:	
	5MP43054	French Operator's Manual and Decal Kit (AD11, AD12, AM11, AR10, AR12, AY11 and AY12)	0.00

THIS PAGE IS INTENTIONALLY LEFT BLANK

AM11E - 72 In. Manure Fork with Grapple for Current 300CX/400/500 Series Carrier

Equipment for Base Machine

```
Cutting Width: 72 In.                                Shipping Weight: 521 lbs.
Loader Series:
  300, 400, and 500
Dimensions:
  W72 In. x H26.5 In. x D34 In.
Grapple Opening: 37 In.
Operational Weight: 471 lbs.
```

Hydraulic functions on loader attachment require third function hydraulic lines and hoses on loader as well as a tractor with (3) SCV's. Please reference the loader and tractor sales information for additional information.

CODE	ATTACHMENT IDENTIFIER	DESCRIPTION	SUGGESTED LIST PRICE USD ($)
		Select One Code From Each Required Category	
		BASE MACHINE	
2142XF		AM11E - 72 In. Manure Fork with Grapple for Current 300CX/400/500 Series Carrier *Note: Reference Frontier Loader Attachment Compatibility Chart for specific loader compatibility.*	2,805.00
		ATTACHMENTS - ORDER AS DESIRED	
9200		French Operators Manual and Decal Kit (AM11 Series)	No Charge
		ATTACHMENTS FOR FIELD CONVERSION	
		Miscellaneous:	
	5MP43054	French Operator's Manual and Decal Kit (AD11, AD12, AM11, AR10, AR12, AY11 and AY12)	0.00

THIS PAGE IS INTENTIONALLY LEFT BLANK

AM11D - 84 In. Manure Fork with Grapple for Current 600/700 Series Carrier

Equipment for Base Machine

```
Cutting Width: 84 In.                                Shipping Weight: 637 lbs.
Loader Series:
  600 and 700
Dimensions:
  W84 In. x H27.5 In. x D26 In.
Grapple Opening: 37 In.
Operational Weight: 587 lbs.
```

Hydraulic functions on loader attachment require third function hydraulic lines and hoses on loader as well as a tractor with (3) SCV's. Please reference the loader and tractor sales information for additional information.

CODE	ATTACHMENT IDENTIFIER	DESCRIPTION	SUGGESTED LIST PRICE USD ($)
		Select One Code From Each Required Category	
		BASE MACHINE	
2143XF		AM11D - 84 In. Manure Fork with Grapple for Current 600/700 Series Carrier *Note: Reference Frontier Loader Attachment Compatibility Chart for specific loader compatibility.*	3,233.00
		ATTACHMENTS - ORDER AS DESIRED	
9200		French Operators Manual and Decal Kit (AM11 Series)	No Charge
		ATTACHMENTS FOR FIELD CONVERSION	
		Miscellaneous:	
	5MP43054	French Operator's Manual and Decal Kit (AD11, AD12, AM11, AR10, AR12, AY11 and AY12)	0.00

THIS PAGE IS INTENTIONALLY LEFT BLANK

AM11D - 96 In. Manure Fork with Grapple for Current 600/700 Series Carrier

Equipment for Base Machine

```
Cutting Width: 96 In.                                Shipping Weight: 701 lbs.
Loader Series:
  600 and 700
Dimensions:
  W96 In. x H27.5 In. x D26 In.
Grapple Opening: 37 In.
Operational Weight: 651 lbs.
```

Hydraulic functions on loader attachment require third function hydraulic lines and hoses on loader as well as a tractor with (3) SCV's. Please reference the loader and tractor sales information for additional information.

CODE	ATTACHMENT IDENTIFIER	DESCRIPTION	SUGGESTED LIST PRICE USD ($)
		Select One Code From Each Required Category	
		BASE MACHINE	
2145XF		AM11D - 96 In. Manure Fork with Grapple for Current 600/700 Series Carrier *Note: Reference Frontier Loader Attachment Compatibility Chart for specific loader compatibility.*	3,785.00
		ATTACHMENTS - ORDER AS DESIRED	
9200		French Operators Manual and Decal Kit (AM11 Series)	No Charge
		ATTACHMENTS FOR FIELD CONVERSION	
		Miscellaneous:	
	5MP43054	French Operator's Manual and Decal Kit (AD11, AD12, AM11, AR10, AR12, AY11 and AY12)	0.00

THIS PAGE IS INTENTIONALLY LEFT BLANK

AM11G - 84 In. Manure Fork with Grapple for Current Loaders with Global Carrier

Equipment for Base Machine

```
Cutting Width: 84 In.                                Shipping Weight: 587 lbs.
Loader Series:
  Global Carrier
Dimensions:
  W84 In. x H24 In. x D35 In.
Grapple Opening: 37 In.
Operational Weight: 537 lbs.
```

Hydraulic functions on loader attachment require third function hydraulic lines and hoses on loader as well as a tractor with (3) SCV's. Please reference the loader and tractor sales information for additional information.

CODE	ATTACHMENT IDENTIFIER	DESCRIPTION	SUGGESTED LIST PRICE USD ($)
		Select One Code From Each Required Category	
		BASE MACHINE	
2144XF		AM11G - 84 In. Manure Fork with Grapple for Current Loaders with Global Carrier *Note: Reference Frontier Loader Attachment Compatibility Chart for specific loader compatibility.*	3,435.00
		ATTACHMENTS - ORDER AS DESIRED	
9200		French Operators Manual and Decal Kit (AM11 Series)	No Charge
		ATTACHMENTS FOR FIELD CONVERSION	
		Miscellaneous:	
	5MP43054	French Operator's Manual and Decal Kit (AD11, AD12, AM11, AR10, AR12, AY11 and AY12)	0.00

THIS PAGE IS INTENTIONALLY LEFT BLANK

AM11G - 96 In. Manure Fork with Grapple for Current Loaders with Global Carrier

Equipment for Base Machine

```
Cutting Width: 96 In.                                Shipping Weight: 651 lbs.
Loader Series:
  Global Carrier
Dimensions:
  W96 In. x H24 In. x D35 In.
Grapple Opening: 37 In.
Operational Weight: 601 lbs.
```

Hydraulic functions on loader attachment require third function hydraulic lines and hoses on loader as well as a tractor with (3) SCV's. Please reference the loader and tractor sales information for additional information.

CODE	ATTACHMENT IDENTIFIER	DESCRIPTION	SUGGESTED LIST PRICE USD ($)
		Select One Code From Each Required Category	
		BASE MACHINE	
2146XF		AM11G - 96 In. Manure Fork with Grapple for Current Loaders with Global Carrier *Note: Reference Frontier Loader Attachment Compatibility Chart for specific loader compatibility.*	3,984.00
		ATTACHMENTS - ORDER AS DESIRED	
9200		French Operators Manual and Decal Kit (AM11 Series)	No Charge
		ATTACHMENTS FOR FIELD CONVERSION	
		Miscellaneous:	
	5MP43054	French Operator's Manual and Decal Kit (AD11, AD12, AM11, AR10, AR12, AY11 and AY12)	0.00

THIS PAGE IS INTENTIONALLY LEFT BLANK

AP12A Fixed Pallet Fork for Current 800 Series Carrier

Equipment for Base Machine

```
Pallet Forks (42 In. or 48 In. in Length):
  Two - 1.57 In. x 5.12 In.
  (600, 700, Global, and
  800 Series Loaders)
Load Rating: 5500 lbs.
  (600, 700, Global, and
  800 Series Loaders)
Dimensions (42 In. Forks or 48 In. Forks):
  37H x 60W x 54L or 60L
```

```
Operational Weight
  (42 In. Forks or 48 In. Forks):
  445 or 465 lbs.
```

CODE	ATTACHMENT IDENTIFIER	DESCRIPTION	SUGGESTED LIST PRICE USD ($)
		Select One Code From Each Required Category	
		BASE MACHINE	
2151XF		AP12A Fixed Pallet Fork for Current 800 Series Carrier *Note: Reference Frontier Loader Attachment Compatibility Chart for specific loader compatibility.*	1,814.00
		PALLET TINE LENGTH	
1000		42 In. Pallet Tine *Rated for 5500 lbs.*	In Base Price
1010		48 In. Pallet Tine *Rated for 5500 lbs.*	54.00
		ATTACHMENTS - ORDER AS DESIRED	
9200		French Operator's Manual and Decal Kit for AB11, AB12, AB13, AB14 Bale Spear and AP12 and AP13 Pallet Forks	No Charge
		ATTACHMENTS FOR FIELD CONVERSION	
		Miscellaneous:	
	5MP43053	French Operator's Manual and Decal Kit for AB11, AB12, AB13 and AB14 Bale Spears and AP12 and AP13 Pallet Forks	0.00

THIS PAGE IS INTENTIONALLY LEFT BLANK

AP12F Fixed Pallet Fork for Current 200/300/400/500 Series Carrier

Equipment for Base Machine

```
Pallet Forks (42 In. or 48 In. in Length):
  Two - 1.38 In. x 4.72 In.
  (200, 300, 400, and
  500 Series Loaders)
Load Rating: 3750 lbs.
  (200, 300, 400, and
  500 Series Loaders)
Dimensions (42 In. Forks or 48 In. Forks):
  34H x 50W x 51L or 57L
```

```
Operational Weight
  (42 In. Forks or 48 In. Forks):
  380 or 395 lbs.
```

CODE	ATTACHMENT IDENTIFIER	DESCRIPTION	SUGGESTED LIST PRICE USD ($)
		Select One Code From Each Required Category	
		BASE MACHINE	
2153XF		AP12F Fixed Pallet Fork for Current 200/300/400/500 Series Carrier *Note: Reference Frontier Loader Attachment Compatibility Chart for specific loader compatibility.*	1,095.00
		PALLET TINE LENGTH	
1000		42 In. Pallet Tine *Rated for 3750 lbs.*	In Base Price
1010		48 In. Pallet Tine *Rated for 3750 lbs.*	40.00
		ATTACHMENTS - ORDER AS DESIRED	
9200		French Operator's Manual and Decal Kit for AB11, AB12, AB13, AB14 Bale Spear and AP12 and AP13 Pallet Forks	No Charge
		ATTACHMENTS FOR FIELD CONVERSION	
		Miscellaneous:	
	5MP43053	French Operator's Manual and Decal Kit for AB11, AB12, AB13 and AB14 Bale Spears and AP12 and AP13 Pallet Forks	0.00

THIS PAGE IS INTENTIONALLY LEFT BLANK

AP12D Fixed Pallet Fork for Current 600/700 Series Carrier

Equipment for Base Machine

```
Pallet Forks (42 In. or 48 In. in Length):
  Two - 1.57 In. x 5.12 In.
  (600, 700, Global, and
  800 Series Loaders)
Load Rating: 5500 lbs.
  (600, 700, Global, and
  800 Series Loaders)
Dimensions (42 In. Forks or 48 In. Forks):
  34H x 50W x 54L or 60L
```

```
Operational Weight
  (42 In. Forks or 48 In. Forks):
  445 or 465 lbs.
```

CODE	ATTACHMENT IDENTIFIER	DESCRIPTION	SUGGESTED LIST PRICE USD ($)
		Select One Code From Each Required Category	
		BASE MACHINE	
2152XF		AP12D Fixed Pallet Fork for Current 600/700 Series Carrier *Note: Reference Frontier Loader Attachment Compatibility Chart for specific loader compatibility.*	1,306.00
		PALLET TINE LENGTH	
1000		42 In. Pallet Tine *Rated for 5500 lbs.*	In Base Price
1010		48 In. Pallet Tine *Rated for 5500 lbs.*	54.00
		ATTACHMENTS - ORDER AS DESIRED	
9200		French Operator's Manual and Decal Kit for AB11, AB12, AB13, AB14 Bale Spear and AP12 and AP13 Pallet Forks	No Charge
		ATTACHMENTS FOR FIELD CONVERSION	
		Miscellaneous:	
	5MP43053	French Operator's Manual and Decal Kit for AB11, AB12, AB13 and AB14 Bale Spears and AP12 and AP13 Pallet Forks	0.00

THIS PAGE IS INTENTIONALLY LEFT BLANK

AP12G Fixed Pallet Fork for Current Loaders with Global Carrier

Equipment for Base Machine

```
Pallet Forks (42 In. or 48 In. in Length):
  Two - 1.57 In. x 5.12 In.
  (600, 700, Global, and
  800 Series Loaders)
Load Rating: 5500 lbs.
  (600, 700, Global, and
  800 Series Loaders)
Dimensions (42 In. Forks or 48 In. Forks):
  37H x 60W x 54L or 60L
```

```
Operational Weight
  (42 In. Forks or 48 In. Forks):
  456 or 476 lbs.
```

CODE	ATTACHMENT IDENTIFIER	DESCRIPTION	SUGGESTED LIST PRICE USD ($)
		Select One Code From Each Required Category	
		BASE MACHINE	
2154XF		AP12G Fixed Pallet Fork for Current Loaders with Global Carrier *Note: Option is not compatible with Global Category II Carrier. Reference Frontier Loader Attachment Compatibility Chart for specific loader compatibility.*	1,307.00
		PALLET TINE LENGTH	
1000		42 In. Pallet Tine *Rated for 5500 lbs.*	In Base Price
1010		48 In. Pallet Tine *Rated for 5500 lbs.*	54.00
		ATTACHMENTS - ORDER AS DESIRED	
9200		French Operator's Manual and Decal Kit for AB11, AB12, AB13, AB14 Bale Spear and AP12 and AP13 Pallet Forks	No Charge
		ATTACHMENTS FOR FIELD CONVERSION	
		Miscellaneous:	
	5MP43053	French Operator's Manual and Decal Kit for AB11, AB12, AB13 and AB14 Bale Spears and AP12 and AP13 Pallet Forks	0.00

THIS PAGE IS INTENTIONALLY LEFT BLANK

AP12K Fixed Pallet Fork for Current Loaders with Global Category 2 Carrier (H480 Loader only)

Equipment for Base Machine

```
Pallet Forks (48 In. in Length):
  Two - 2.00 In. x 5.00 In.
  (Global Category 2,
  Loader Carrier)
Load Rating: 10,000 lbs.
  (Global Category 2 Carrier, H480 Loader)
Dimensions (48 In. Forks):
  43H x 59W x 60L
Operational Weight
(48 In. Forks):
812 lbs.
```

CODE	ATTACHMENT IDENTIFIER	DESCRIPTION	SUGGESTED LIST PRICE USD ($)
		Select One Code From Each Required Category	
		BASE MACHINE	
2155XF		AP12K Fixed Pallet Fork for Current Loaders with Global Category 2 Carrier (H480 Loader only) *Note: 48 In Pallet Forks Included as Standard Equipment.* *Reference Frontier Loader Attachment Compatibility Chart for specific loader compatibility.*	3,286.00

THIS PAGE IS INTENTIONALLY LEFT BLANK

AP13F Floating Pallet Fork for Current 200/300/400/500 Series Carrier

Equipment for Base Machine

```
Pallet Forks (42 In. or 48 In. in Length):              360 or 375 lbs.
  Two - 1.38 In. x 4.72 In.
Load Rating: 3750 lbs.
Dimensions (42 In. Forks or 48 In. Forks):
  31H x 50W x 51L or 57L
Operational Weight
  (42 In. Forks or 48 In. Forks):
```

CODE	ATTACHMENT IDENTIFIER	DESCRIPTION	SUGGESTED LIST PRICE USD ($)
		Select One Code From Each Required Category	
		BASE MACHINE	
2162XF		AP13F Floating Pallet Fork for Current 200/300/400/500 Series Carrier *Note: Reference Frontier Loader Attachment Compatibility Chart for specific loader compatibility.*	1,111.00
		PALLET TINE LENGTH	
1000		42 In. Pallet Tine *Rated for 3750 lbs.*	In Base Price
1010		48 In. Pallet Tine *Rated for 3750 lbs.*	60.00
		ATTACHMENTS - ORDER AS DESIRED	
9200		French Operator's Manual and Decal Kit for AB11, AB12, AB13, AB14 Bale Spear and AP12 and AP13 Pallet Forks	No Charge
		ATTACHMENTS FOR FIELD CONVERSION	
		Miscellaneous:	
	5MP43053	French Operator's Manual and Decal Kit for AB11, AB12, AB13 and AB14 Bale Spears and AP12 and AP13 Pallet Forks	0.00

THIS PAGE IS INTENTIONALLY LEFT BLANK

AP13D Floating Pallet Fork for Current 600/700 Series Carrier

Equipment for Base Machine

```
Pallet Forks (42 In. or 48 In. in Length):              425 or 445 lbs.
  Two - 1.57 In. x 5.12 In.
Load Rating: 5500 lbs.
Dimensions (42 In. Forks or 48 In. Forks):
  34H x 50W x 54L or 60L
Operational Weight
  (42 In. Forks or 48 In. Forks):
```

CODE	ATTACHMENT IDENTIFIER	DESCRIPTION	SUGGESTED LIST PRICE USD ($)
		Select One Code From Each Required Category	
		BASE MACHINE	
2161XF		AP13D Floating Pallet Fork for Current 600/700 Series Carrier *Note: Reference Frontier Loader Attachment Compatibility Chart for specific loader compatibility.*	1,285.00
		PALLET TINE LENGTH	
1000		42 In. Pallet Tine *Rated for 5500 lbs.*	In Base Price
1010		48 In. Pallet Tine *Rated for 5500 lbs.*	69.00
		ATTACHMENTS - ORDER AS DESIRED	
9200		French Operator's Manual and Decal Kit for AB11, AB12, AB13, AB14 Bale Spear and AP12 and AP13 Pallet Forks	No Charge
		ATTACHMENTS FOR FIELD CONVERSION	
		Miscellaneous:	
	5MP43053	French Operator's Manual and Decal Kit for AB11, AB12, AB13 and AB14 Bale Spears and AP12 and AP13 Pallet Forks	0.00

THIS PAGE IS INTENTIONALLY LEFT BLANK

AP13G Floating Pallet Fork for Current Loaders with Global Carrier

Equipment for Base Machine

```
Pallet Forks (42 In. or 48 In. in Length):              440 or 460 lbs.
  Two - 1.57 In. x 5.12 In.
Load Rating: 5500 lbs.
Dimensions (42 In. Forks or 48 In. Forks):
  32H x 49W x 52L or 58L
Operational Weight
  (42 In. Forks or 48 In. Forks):
```

CODE	ATTACHMENT IDENTIFIER	DESCRIPTION	SUGGESTED LIST PRICE USD ($)
		Select One Code From Each Required Category	
		BASE MACHINE	
2163XF		AP13G Floating Pallet Fork for Current Loaders with Global Carrier *Note: Option is not compatible with Global Category II Carrier. Reference Frontier Loader Attachment Compatibility Chart for specific loader compatibility.*	1,247.00
		PALLET TINE LENGTH	
1000		42 In. Pallet Tine *Rated for 5500 lbs.*	In Base Price
1010		48 In. Pallet Tine *Rated for 5500 lbs.*	69.00
		ATTACHMENTS - ORDER AS DESIRED	
9200		French Operator's Manual and Decal Kit for AB11, AB12, AB13, AB14 Bale Spear and AP12 and AP13 Pallet Forks	No Charge
		ATTACHMENTS FOR FIELD CONVERSION	
		Miscellaneous:	
	5MP43053	French Operator's Manual and Decal Kit for AB11, AB12, AB13 and AB14 Bale Spears and AP12 and AP13 Pallet Forks	0.00

THIS PAGE IS INTENTIONALLY LEFT BLANK

AR10H - 55 In. Rock Bucket for Current 300/400 Series Carrier

Equipment for Base Machine

Cutting Width: 55 In.
Loader Series:
  300 and 400 Only (Not 500 Series)
Dimensions:
  W54.8 In. x H22 In. x D23 In.
Capacity:
  0.32 Cubic Foot
Tine Diameter: 1-1/8 In.
Tine Length: 22 In.

Operational Weight: 282 lbs.
Shipping Weight: 352 lbs.

CODE	ATTACHMENT IDENTIFIER	DESCRIPTION	SUGGESTED LIST PRICE USD ($)
		Select One Code From Each Required Category	
		BASE MACHINE	
2171XF		AR10H - 55 In. Rock Bucket for Current 300/400 Series Carrier *Tine spacing is 2 In. on 55 In. model.* *Note: Reference Frontier Loader Attachment Compatibility Chart for specific loader compatibility.*	1,577.00
		ATTACHMENTS - ORDER AS DESIRED	
9200		French Operators Manual and Decal Kit (AR10 and AR12 Series)	No Charge
		ATTACHMENTS FOR FIELD CONVERSION	
		Miscellaneous:	
	5MP43054	French Operator's Manual and Decal Kit (AD11, AD12, AM11, AR10, AR12, AY11 and AY12)	0.00

THIS PAGE IS INTENTIONALLY LEFT BLANK

AR10E - 66 In. Rock Bucket for Current 300/400/500 Series Carrier

Equipment for Base Machine

Cutting Width: 60 In.
Loader Series:
  300, 400, and 500
Dimensions:
  W68.4 In. (W65.9 In.) x H21.7 In. x D45 In.
Capacity:
  0.82 Cubic Foot
Optional Hydraulic Grapple - Opening:
  60 In.
Optional Hydraulic Grapple - Weight:
  375 lbs.
Tine Diameter: 1-1/8 In.

Tine Length: 39 In.
Operational Weight:
  585 lbs. (458 lbs.)
Shipping Weight:
  670 lbs. (550 lbs.)

Hydraulic functions on loader attachment require third function hydraulic lines and hoses on loader as well as a tractor with (3) SCV's. Please reference the loader and tractor sales information for additional information.

CODE	ATTACHMENT IDENTIFIER	DESCRIPTION	SUGGESTED LIST PRICE USD ($)
		Select One Code From Each Required Category	
		BASE MACHINE	
2172XF		AR10E - 66 In. Rock Bucket for Current 300/400/500 Series Carrier *Note: Reference Frontier Loader Attachment Compatibility Chart for specific loader compatibility.*	2,185.00
		TINE SPACING	
1000		2 In. Tine Spacing	In Base Price
1010		3 In. Tine Spacing	-177.00
		ATTACHMENTS - ORDER AS DESIRED	
9050		Grapple Attachment for Rock Bucket *Fits AR10E models with 66 In. and 75 In. working widths and used on 300/400 series loaders.*	2,484.00
9060		Grapple Attachment for Rock Bucket *Fits AR10E, AR10D, and AR10G models with 66 In. and 75 In. working widths and used on 500/600/700 series loaders as well as loaders with global carriers.*	2,493.00
9200		French Operators Manual and Decal Kit (AR10 and AR12 Series)	No Charge
		ATTACHMENTS FOR FIELD CONVERSION	
		Miscellaneous:	
	5MP43054	French Operator's Manual and Decal Kit (AD11, AD12, AM11, AR10, AR12, AY11 and AY12)	0.00
	5MP106503	Grapple Attachment for Rock Bucket Fits AR10E, AR10D, and AR10G Models with 66 In. and 75 In. Working Widths *No Hydraulic included when ordered as AFC. Order either 5MP106524 or 5MP103533 for hydraulics.*	2,579.27

AR10E - 66 In. Rock Bucket for Current 300/400/500 Series Carrier

Continued

CODE	ATTACHMENT IDENTIFIER	DESCRIPTION	SUGGESTED LIST PRICE USD ($)
		ATTACHMENTS FOR FIELD CONVERSION ...Continued...	
	5MP103533	Hydraulic Kit for use with 5MP106503 Rock Bucket Grapple Attachment *Fitting compatible with 500, 600 and 700 series loaders as well as loaders with global carrier that do not have the multicoupler installation.*	117.39
	5MP106524	Hydraulic Kit for use with 5MP106503 Rock Bucket Grapple Attachment *Fittings compatible with 300 and 400 series loaders.*	107.81

AR10E - 75 In. Rock Bucket for Current 300/400/500 Series Carrier

Equipment for Base Machine

Cutting Width: 75 In.
Loader Series:
  300, 400, and 500
Dimensions:
  W74.7 In. (W74.4 In.) x H21.7 In. x D45 In.
Capacity:
  0.89 Cubic Foot
Optional Hydraulic Grapple - Opening:
  60 In.
Optional Hydraulic Grapple - Weight:
  375 lbs.
Tine Diameter: 1-1/8 In.

Tine Length: 39 In.
Operational Weight:
  632 lbs. (528 lbs.)
Shipping Weight:
  707 lbs. (603 lbs.)

Hydraulic functions on loader attachment require third function hydraulic lines and hoses on loader as well as a tractor with (3) SCV's. Please reference the loader and tractor sales information for additional information.

CODE	ATTACHMENT IDENTIFIER	DESCRIPTION	SUGGESTED LIST PRICE USD ($)
		Select One Code From Each Required Category	
		BASE MACHINE	
2174XF		AR10E - 75 In. Rock Bucket for Current 300/400/500 Series Carrier *Note: Reference Frontier Loader Attachment Compatibility Chart for specific loader compatibility.*	2,384.00
		TINE SPACING	
1000		2 In. Tine Spacing	In Base Price
1010		3 In. Tine Spacing	-242.00
		ATTACHMENTS - ORDER AS DESIRED	
9050		Grapple Attachment for Rock Bucket *Fits AR10E models with 66 In. and 75 In. working widths and used on 300/400 series loaders.*	2,484.00
9060		Grapple Attachment for Rock Bucket *Fits AR10E, AR10D, and AR10G models with 66 In. and 75 In. working widths and used on 500/600/700 series loaders as well as loaders with global carriers.*	2,493.00
9200		French Operators Manual and Decal Kit (AR10 and AR12 Series)	No Charge
		ATTACHMENTS FOR FIELD CONVERSION	
		Miscellaneous:	
	5MP43054	French Operator's Manual and Decal Kit (AD11, AD12, AM11, AR10, AR12, AY11 and AY12)	0.00
	5MP106503	Grapple Attachment for Rock Bucket Fits AR10E, AR10D, and AR10G Models with 66 In. and 75 In. Working Widths *No Hydraulic included when ordered as AFC. Order either 5MP106524 or 5MP103533 for hydraulics.*	2,579.27

AR10E - 75 In. Rock Bucket for Current 300/400/500 Series Carrier

Continued

CODE	ATTACHMENT IDENTIFIER	DESCRIPTION	SUGGESTED LIST PRICE USD ($)
		ATTACHMENTS FOR FIELD CONVERSION ...Continued...	
	5MP103533	Hydraulic Kit for use with 5MP106503 Rock Bucket Grapple Attachment *Fitting compatible with 500, 600 and 700 series loaders as well as loaders with global carrier that do not have the multicoupler installation.*	117.39
	5MP106524	Hydraulic Kit for use with 5MP106503 Rock Bucket Grapple Attachment *Fittings compatible with 300 and 400 series loaders.*	107.81

AR10D - 75 In. Rock Bucket for Current 600/700 Series Carrier

Equipment for Base Machine

Cutting Width: 75 In.
Loader Series:
  600 and 700
Dimensions:
  W74.7 In. (W74.4 In.) x H21.7 In. x D45 In.
Capacity:
  0.89 Cubic Foot
Optional Hydraulic Grapple - Opening:
  60 In.
Optional Hydraulic Grapple - Weight:
  375 lbs.
Tine Diameter: 1-1/8 In.
Tine Length: 39 In.
Operational Weight:
  632 lbs. (528 lbs.)
Shipping Weight:
  707 lbs. (603 lbs.)

Hydraulic functions on loader attachment require third function hydraulic lines and hoses on loader as well as a tractor with (3) SCV's. Please reference the loader and tractor sales information for additional information.

CODE	ATTACHMENT IDENTIFIER	DESCRIPTION	SUGGESTED LIST PRICE USD ($)
		Select One Code From Each Required Category	
		BASE MACHINE	
2173XF		AR10D - 75 In. Rock Bucket for Current 600/700 Series Carrier *Note: Reference Frontier Loader Attachment Compatibility Chart for specific loader compatibility.*	2,452.00
		TINE SPACING	
1000		2 In. Tine Spacing	In Base Price
1010		3 In. Tine Spacing	-233.00
		ATTACHMENTS - ORDER AS DESIRED	
9060		Grapple Attachment for Rock Bucket *Fits AR10E, AR10D, and AR10G models with 66 In. and 75 In. working widths and used on 500/600/700 series loaders as well as loaders with global carriers.*	2,493.00
9200		French Operators Manual and Decal Kit (AR10 and AR12 Series)	No Charge
		ATTACHMENTS FOR FIELD CONVERSION	
		Miscellaneous:	
	5MP43054	French Operator's Manual and Decal Kit (AD11, AD12, AM11, AR10, AR12, AY11 and AY12)	0.00
	5MP106503	Grapple Attachment for Rock Bucket Fits AR10E, AR10D, and AR10G Models with 66 In. and 75 In. Working Widths *No Hydraulic included when ordered as AFC. Order 5MP103533 for hydraulics.*	2,579.27
	5MP103533	Hydraulic Kit for use with 5MP106503 Rock Bucket Grapple Attachment *Fitting compatible with 500, 600 and 700 series loaders as well as loaders with global carrier that do not have the multicoupler installation.*	117.39

THIS PAGE IS INTENTIONALLY LEFT BLANK

AR10G - 75 In. Rock Bucket for Current Loaders with Global Carrier

Equipment for Base Machine

Cutting Width: 75 In.
Loader Series:
  Global Carrier
Dimensions:
  W74.7 In. (W74.4 In.) x H21.7 In. x D45 In.
Capacity:
  0.89 Cubic Foot
Optional Hydraulic Grapple - Opening:
  60 In.
Optional Hydraulic Grapple - Weight:
  375 lbs.
Tine Diameter: 1-1/8 In.
Tine Length: 39 In.
Operational Weight:
  739 lbs. (619 lbs.)
Shipping Weight:
  814 lbs. (694 lbs.)

Hydraulic functions on loader attachment require third function hydraulic lines and hoses on loader as well as a tractor with (3) SCV's. Please reference the loader and tractor sales information for additional information.

CODE	ATTACHMENT IDENTIFIER	DESCRIPTION	SUGGESTED LIST PRICE USD ($)
		Select One Code From Each Required Category	
		BASE MACHINE	
2175XF		AR10G - 75 In. Rock Bucket for Current Loaders with Global Carrier *Note: Option is not compatible with Global Category II Carrier. Reference Frontier Loader Attachment Compatibility Chart for specific loader compatibility.*	2,704.00
		TINE SPACING	
1000		2 In. Tine Spacing	In Base Price
1010		3 In. Tine Spacing	-145.00
		ATTACHMENTS - ORDER AS DESIRED	
9060		Grapple Attachment for Rock Bucket *Fits AR10E, AR10D, and AR10G models with 66 In. and 75 In. working widths and used on 500/600/700 series loaders as well as loaders with global carriers.*	2,493.00
9200		French Operators Manual and Decal Kit (AR10 and AR12 Series)	No Charge
		ATTACHMENTS FOR FIELD CONVERSION	
		Miscellaneous:	
	5MP43054	French Operator's Manual and Decal Kit (AD11, AD12, AM11, AR10, AR12, AY11 and AY12)	0.00
	5MP106503	Grapple Attachment for Rock Bucket Fits AR10E, AR10D, and AR10G Models with 66 In. and 75 In. Working Widths *No Hydraulic included when ordered as AFC. Order 5MP103533 for hydraulics.*	2,579.27
	5MP103533	Hydraulic Kit for use with 5MP106503 Rock Bucket Grapple Attachment *Fitting compatible with 500, 600 and 700 series loaders as well as loaders with global carrier that do not have the multicoupler installation.*	117.39

THIS PAGE IS INTENTIONALLY LEFT BLANK

AR12A - 84 In. Rock Bucket for Current 800 Series Carrier

Equipment for Base Machine

Cutting Width: 84 In.
Loader Series: 800
Dimensions:
  W85 In. x H35 In. x D61 In.
Capacity:
  1.02 Cubic Foot
Tine Diameter: 1-5/8 In.
Tine Length: 46 In.

Operational Weight: 1536 lbs.
Shipping Weight: 1666 lbs.

CODE	ATTACHMENT IDENTIFIER	DESCRIPTION	SUGGESTED LIST PRICE USD ($)
		Select One Code From Each Required Category	
		BASE MACHINE	
2181XF		AR12A - 84 In. Rock Bucket for Current 800 Series Carrier *Tine spacing is 3 In. on AR12 series rock buckets.* *Note: Reference Frontier Loader Attachment Compatibility Chart for specific loader compatibility.*	6,235.00
		ATTACHMENTS - ORDER AS DESIRED	
9200		French Operators Manual and Decal Kit (AR10 and AR12 Series)	No Charge
		ATTACHMENTS FOR FIELD CONVERSION	
		Miscellaneous:	
	5MP43054	French Operator's Manual and Decal Kit (AD11, AD12, AM11, AR10, AR12, AY11 and AY12)	0.00

THIS PAGE IS INTENTIONALLY LEFT BLANK

AR12A - 93 In. Rock Bucket for Current 800 Series Carrier

Equipment for Base Machine

Cutting Width: 93 In.
Loader Series: 800
Dimensions:
  W94 In. x H35 In. x D61 In.
Capacity:
  1.17 Cubic Foot
Tine Diameter: 1-5/8 In.
Tine Length: 46 In.

Operational Weight: 1680 lbs.
Shipping Weight: 1810 lbs.

CODE	ATTACHMENT IDENTIFIER	DESCRIPTION	SUGGESTED LIST PRICE USD ($)
		Select One Code From Each Required Category	
		BASE MACHINE	
2184XF		AR12A - 93 In. Rock Bucket for Current 800 Series Carrier *Tine spacing is 3 In. on AR12 series rock buckets.* *Note: Reference Frontier Loader Attachment Compatibility Chart for specific loader compatibility.*	6,952.00
		ATTACHMENTS - ORDER AS DESIRED	
9200		French Operators Manual and Decal Kit (AR10 and AR12 Series)	No Charge
		ATTACHMENTS FOR FIELD CONVERSION	
		Miscellaneous:	
	5MP43054	French Operator's Manual and Decal Kit (AD11, AD12, AM11, AR10, AR12, AY11 and AY12)	0.00

THIS PAGE IS INTENTIONALLY LEFT BLANK

AR12D - 84 In. Rock Bucket for Current 600/700 Series Carrier

Equipment for Base Machine

Cutting Width: 84 In.
Loader Series:
  600 and 700
Dimensions:
  W82.7 In. x H35 In. x D61 In.
Capacity:
  1.02 Cubic Foot
Tine Diameter: 1-5/8 In.
Tine Length: 46 In.

Operational Weight: 1561 lbs.
Shipping Weight: 1691 lbs.

CODE	ATTACHMENT IDENTIFIER	DESCRIPTION	SUGGESTED LIST PRICE USD ($)
		Select One Code From Each Required Category	
		BASE MACHINE	
2182XF		AR12D - 84 In. Rock Bucket for Current 600/700 Series Carrier *Tine spacing is 3 In. on AR12 series rock buckets.* *Note: Reference Frontier Loader Attachment Compatibility Chart for specific loader compatibility.*	6,469.00
		ATTACHMENTS - ORDER AS DESIRED	
9200		French Operators Manual and Decal Kit (AR10 and AR12 Series)	No Charge
		ATTACHMENTS FOR FIELD CONVERSION	
		Miscellaneous:	
	5MP43054	French Operator's Manual and Decal Kit (AD11, AD12, AM11, AR10, AR12, AY11 and AY12)	0.00

THIS PAGE IS INTENTIONALLY LEFT BLANK

AR12D - 93 In. Rock Bucket for Current 600/700 Series Carrier

Equipment for Base Machine

```
Cutting Width: 93 In.
Loader Series:
  600 and 700
Dimensions:
  W94 In. x H35 In. x D61 In.
Capacity:
  1.17 Cubic Foot
Tine Diameter: 1-5/8 In.
Tine Length: 46 In.
```

```
Operational Weight: 1718 lbs.
Shipping Weight: 1848 lbs.
```

CODE	ATTACHMENT IDENTIFIER	DESCRIPTION	SUGGESTED LIST PRICE USD ($)
		Select One Code From Each Required Category	
		BASE MACHINE	
2185XF		AR12D - 93 In. Rock Bucket for Current 600/700 Series Carrier *Tine spacing is 3 In. on AR12 series rock buckets.* *Note: Reference Frontier Loader Attachment Compatibility Chart for specific loader compatibility.*	6,566.00
		ATTACHMENTS - ORDER AS DESIRED	
9200		French Operators Manual and Decal Kit (AR10 and AR12 Series)	No Charge
		ATTACHMENTS FOR FIELD CONVERSION	
		Miscellaneous:	
	5MP43054	French Operator's Manual and Decal Kit (AD11, AD12, AM11, AR10, AR12, AY11 and AY12)	0.00

THIS PAGE IS INTENTIONALLY LEFT BLANK

AR12G - 84 In. Rock Bucket for Current Loaders with Global Carrier

Equipment for Base Machine

```
Cutting Width: 84 In.
Loader Series:
  Global Carrier
Dimensions:
  W82.7 In. x H35 In. x D61 In.
Capacity:
  1.02 Cubic Foot
Tine Diameter: 1-5/8 In.
Tine Length: 46 In.
```

```
Operational Weight: 1481 lbs.
Shipping Weight: 1611 lbs.
```

CODE	ATTACHMENT IDENTIFIER	DESCRIPTION	SUGGESTED LIST PRICE USD ($)
		Select One Code From Each Required Category	
		BASE MACHINE	
2183XF		AR12G - 84 In. Rock Bucket for Current Loaders with Global Carrier *Tine spacing is 3 In. on AR12 series rock buckets.* *Note: Option is not compatible with Global Category II Carrier. Reference Frontier Loader Attachment Compatibility Chart for specific loader compatibility.*	6,299.00
		ATTACHMENTS - ORDER AS DESIRED	
9200		French Operators Manual and Decal Kit (AR10 and AR12 Series)	No Charge
		ATTACHMENTS FOR FIELD CONVERSION	
		Miscellaneous:	
	5MP43054	French Operator's Manual and Decal Kit (AD11, AD12, AM11, AR10, AR12, AY11 and AY12)	0.00

THIS PAGE IS INTENTIONALLY LEFT BLANK

AR12G - 93 In. Rock Bucket for Current Loaders with Global Carrier

Equipment for Base Machine

```
Cutting Width: 93 In.
Loader Series:
  Global Carrier
Dimensions:
  W94 In. x H35 In. x D61 In.
Capacity:
  1.17 Cubic Foot
Tine Diameter: 1-5/8 In.
Tine Length: 46 In.
```

```
Operational Weight: 1623 lbs.
Shipping Weight: 1753 lbs.
```

CODE	ATTACHMENT IDENTIFIER	DESCRIPTION	SUGGESTED LIST PRICE USD ($)
		Select One Code From Each Required Category	
		BASE MACHINE	
2186XF		AR12G - 93 In. Rock Bucket for Current Loaders with Global Carrier *Tine spacing is 3 In. on AR12 series rock buckets.* *Note: Option is not compatible with Global Category II Carrier. Reference Frontier Loader Attachment Compatibility Chart for specific loader compatibility.*	6,193.00
		ATTACHMENTS - ORDER AS DESIRED	
9200		French Operators Manual and Decal Kit (AR10 and AR12 Series)	No Charge
		ATTACHMENTS FOR FIELD CONVERSION	
		Miscellaneous:	
	5MP43054	French Operator's Manual and Decal Kit (AD11, AD12, AM11, AR10, AR12, AY11 and AY12)	0.00

THIS PAGE IS INTENTIONALLY LEFT BLANK

AV20H Root Grapple - 60 In. for Current 300/400 Series Carrier

Equipment for Base Machine

Cutting Width: 60 In.
Loader Series:
  300CX and 400 Only (Not 500 Series)
Dimensions:
  W60 In. x H23 In. x D38.8 In.
Grapple Opening: 27 In.
Operational Weight: 381 lbs.

Shipping Weight: 421 lbs.

CODE	ATTACHMENT IDENTIFIER	DESCRIPTION	SUGGESTED LIST PRICE USD ($)
		Select One Code From Each Required Category	
		BASE MACHINE	
2271XF		AV20H Root Grapple - 60 In. for Current 300/400 Series Carrier *Note: Reference Frontier Loader Attachment Compatibility Chart for specific loader compatibility.*	2,189.00
		ATTACHMENTS - ORDER AS DESIRED	
9000		AV20 Series Parking Stand Kit - Bolt On	166.00
		ATTACHMENTS FOR FIELD CONVERSION	
		Miscellaneous:	
	5WS811395	AV20 Series Parking Stand Kit - Bolt On	166.63

THIS PAGE IS INTENTIONALLY LEFT BLANK

AV20E Root Grapple - 62 In. for Current 400/500 Series Carrier

Equipment for Base Machine

Cutting Width: 62 In.
Loader Series:
  400CX and 500 Only
Dimensions:
  W62 In. x H25 In. x D54 In.
Grapple Opening: 50 In.
Operational Weight: 818 lbs.

Shipping Weight: 858 lbs.

CODE	ATTACHMENT IDENTIFIER	DESCRIPTION	SUGGESTED LIST PRICE USD ($)
		Select One Code From Each Required Category	
		BASE MACHINE	
2272XF		AV20E Root Grapple - 62 In. for Current 400/500 Series Carrier *Note: Reference Frontier Loader Attachment Compatibility Chart for specific loader compatibility.*	3,574.00
		ATTACHMENTS - ORDER AS DESIRED	
9000		AV20 Series Parking Stand Kit - Bolt On	166.00
		ATTACHMENTS FOR FIELD CONVERSION	
		Miscellaneous:	
	5WS811395	AV20 Series Parking Stand Kit - Bolt On	166.63

THIS PAGE IS INTENTIONALLY LEFT BLANK

AV20D Root Grapple - 77 In. for Current 600/700 Series Carrier

Equipment for Base Machine

Cutting Width: 77 In.
Loader Series:
  600 and 700
Dimensions:
  W77 In. x H25 In. x D15 In.
Grapple Opening: 50 In.
Operational Weight: 1,000 lbs.

Shipping Weight: 1,040 lbs.

CODE	ATTACHMENT IDENTIFIER	DESCRIPTION	SUGGESTED LIST PRICE USD ($)
		Select One Code From Each Required Category	
		BASE MACHINE	
2273XF		AV20D Root Grapple - 77 In. for Current 600/700 Series Carrier *Note: Reference Frontier Loader Attachment Compatibility Chart for specific loader compatibility.*	4,233.00
		ATTACHMENTS - ORDER AS DESIRED	
9000		AV20 Series Parking Stand Kit - Bolt On	166.00
		ATTACHMENTS FOR FIELD CONVERSION	
		Miscellaneous:	
	5WS811395	AV20 Series Parking Stand Kit - Bolt On	166.63

THIS PAGE IS INTENTIONALLY LEFT BLANK

AV20G Root Grapple - 77 In. for Current Loaders with Global Carrier

Equipment for Base Machine

Cutting Width: 77 In.
Loader Series:
  Global Carriers
Dimensions:
  W77 In. x H25 In. x D15 In.
Grapple Opening: 50 In.
Operational Weight: 972 lbs.

Shipping Weight: 1012 lbs.

CODE	ATTACHMENT IDENTIFIER	DESCRIPTION	SUGGESTED LIST PRICE USD ($)
		Select One Code From Each Required Category	
		BASE MACHINE	
2274XF		AV20G Root Grapple - 77 In. for Current Loaders with Global Carrier *Note: Option is not compatible with Global Category II Carrier. Reference Frontier Loader Attachment Compatibility Chart for specific loader compatibility.*	4,144.00
		ATTACHMENTS - ORDER AS DESIRED	
9000		AV20 Series Parking Stand Kit - Bolt On	166.00
		ATTACHMENTS FOR FIELD CONVERSION	
		Miscellaneous:	
	5WS811395	AV20 Series Parking Stand Kit - Bolt On	166.63

THIS PAGE IS INTENTIONALLY LEFT BLANK

AG10A Silage Defacer for Current 800 Series Carrier

Equipment for Base Machine

Shipping Weight: 870 lbs.
Non-Sizing Cutting Tooth
Motor Shaft: 1.5 In.
Motor Chain Type: 80-ASA
Equipment Weight: 735 lbs.
Cutting Width: 96 In.
Bearing: Greaseable Spherical Type
Tooth Material: 50,000 Yield Strength Material

Hydraulic functions on loader attachment require third function hydraulic lines and hoses on loader as well as a tractor with (3) SCV's. Please reference the loader and tractor sales information for additional information.

CODE	ATTACHMENT IDENTIFIER	DESCRIPTION	SUGGESTED LIST PRICE USD ($)
		Select One Code From Each Required Category	
		BASE MACHINE	
2111XF		AG10A Silage Defacer for Current 800 Series Carrier *Note: Reference Frontier Loader Attachment Compatibility Chart for specific loader compatibility.*	6,954.00
		ATTACHMENTS - ORDER AS DESIRED	
9200		French Operators Manual and Decal Kit (AG10 Series)	No Charge
		ATTACHMENTS FOR FIELD CONVERSION	
		Miscellaneous:	
	5MP43052	French Operator's Manual and Decal Kit for Models: AB15, AB16, AE11, AF11, AF12, AG10, AH11, AS10, AS11	0.00

THIS PAGE IS INTENTIONALLY LEFT BLANK

AG10D Silage Defacer for Current 600/700 Series Carrier

Equipment for Base Machine

```
Shipping Weight: 870 lbs.                                50,000 Yield Strength Material
Non-Sizing Cutting Tooth
Motor Shaft: 1.5 In.
Motor Chain Type: 80-ASA
Equipment Weight: 735 lbs.
Cutting Width: 96 In.
Bearing: Greaseable Spherical Type
Tooth Material:
```

Hydraulic functions on loader attachment require third function hydraulic lines and hoses on loader as well as a tractor with (3) SCV's. Please reference the loader and tractor sales information for additional information.

CODE	ATTACHMENT IDENTIFIER	DESCRIPTION	SUGGESTED LIST PRICE USD ($)
		Select One Code From Each Required Category	
		BASE MACHINE	
2112XF		AG10D Silage Defacer for Current 600/700 Series Carrier *Note: Reference Frontier Loader Attachment Compatibility Chart for specific loader compatibility.*	6,800.00
		ATTACHMENTS - ORDER AS DESIRED	
9200		French Operators Manual and Decal Kit (AG10 Series)	No Charge
		ATTACHMENTS FOR FIELD CONVERSION	
		Miscellaneous:	
	5MP43052	French Operator's Manual and Decal Kit for Models: AB15, AB16, AE11, AF11, AF12, AG10, AH11, AS10, AS11	0.00

THIS PAGE IS INTENTIONALLY LEFT BLANK

AG10G Silage Defacer for Current Loaders with Global Carrier

Equipment for Base Machine

Shipping Weight: 870 lbs.
Non-Sizing Cutting Tooth
Motor Shaft: 1.5 In.
Motor Chain Type: 80-ASA
Equipment Weight: 735 lbs.
Cutting Width: 96 In.
Bearing: Greaseable Spherical Type
Tooth Material: 50,000 Yield Strength Material

Hydraulic functions on loader attachment require third function hydraulic lines and hoses on loader as well as a tractor with (3) SCV's. Please reference the loader and tractor sales information for additional information.

CODE	ATTACHMENT IDENTIFIER	DESCRIPTION	SUGGESTED LIST PRICE USD ($)
		Select One Code From Each Required Category	
		BASE MACHINE	
2113XF		AG10G Silage Defacer for Current Loaders with Global Carrier *Note: Option is not compatible with Global Category II Carrier. Reference Frontier Loader Attachment Compatibility Chart for specific loader compatibility.*	6,091.00
		ATTACHMENTS - ORDER AS DESIRED	
9200		French Operators Manual and Decal Kit (AG10 Series)	No Charge
		ATTACHMENTS FOR FIELD CONVERSION	
		Miscellaneous:	
	5MP43052	French Operator's Manual and Decal Kit for Models: AB15, AB16, AE11, AF11, AF12, AG10, AH11, AS10, AS11	0.00

THIS PAGE IS INTENTIONALLY LEFT BLANK

AG11S Silage Defacer for Skid Steers

Equipment for Base Machine

```
Non-Sizing Cutting Tooth
Bearing: Greaseable Spherical Type
Motor Shaft: 1.5 In.
Cutting Width: 96 In.
Drive System: 80 ASA Chain
```

CODE	ATTACHMENT IDENTIFIER	DESCRIPTION	SUGGESTED LIST PRICE USD ($)
		Select One Code From Each Required Category	
		BASE MACHINE	
2121XF		AG11S Silage Defacer for Skid Steers *Unit has reduced reach to address skid steers with limited lift capacity.*	6,798.00

THIS PAGE IS INTENTIONALLY LEFT BLANK

AG12S Silage Defacer for Skid Steers

Equipment for Base Machine

```
Non-Sizing Cutting Tooth
Bearing: Greaseable Spherical Type
Motor Shaft: 1.5 In.
Cutting Width: 96 In.
Drive System: 80 ASA Chain
```

CODE	ATTACHMENT IDENTIFIER	DESCRIPTION	SUGGESTED LIST PRICE USD ($)
		Select One Code From Each Required Category	
		BASE MACHINE	
2122XF		AG12S Silage Defacer for Skid Steers	7,251.00

THIS PAGE IS INTENTIONALLY LEFT BLANK

AT1096G Grapple - Hay & Forage

Equipment for Base Machine

Shipping Weight With Pallet: 740 lbs.
Mounting Hardware: Included
Width: 96 Ins.

CODE	ATTACHMENT IDENTIFIER	DESCRIPTION	SUGGESTED LIST PRICE USD ($)

Select One Code From Each Required Category

BASE MACHINE

2251XF	AT1096G Grapple - Hay & Forage	5,423.00

AT1096G Grapple - Hay & Forage
Continued

THIS PAGE IS INTENTIONALLY LEFT BLANK

AT2016G Bucket - Hay & Forage

Equipment for Base Machine

```
Capacity: 1.6 Cubic Yard
Cutting Edge: Standard Bolt On
Shipping Weight With Pallet: 1350 lbs.
Quick Attach: Yes
Operational Weight: 1201 lbs.
Width: 96 Ins.
```

CODE	ATTACHMENT IDENTIFIER	DESCRIPTION	SUGGESTED LIST PRICE USD ($)
		Select One Code From Each Required Category	
		BASE MACHINE	
2252XF		AT2016G Bucket - Hay & Forage	3,525.00

AT2016G Bucket - Hay & Forage
Continued

THIS PAGE IS INTENTIONALLY LEFT BLANK

AT2016U Bucket & Grapple - Hay & Forage

Equipment for Base Machine

Shipping Weight with Pallet:
2090 lbs.
Grapple Opening-Bucket Edge to
Point of Tines: 62.86 Ins.
Grapple Length: 94.63 Ins.
Outside to Outside
Grapple Height Open-Bucket
Bottom/Grapple Top: 89.98 Ins.
Grapple Height Closed-Bucket
Bottom/Grapple Top: 57.28 Ins.

Bucket Width - Cutting Edge to
Rear Most Point: 48.15 Ins.
Bucket Length: 96 Ins. Outside
Bucket Height: 29.61 Ins.

CODE	ATTACHMENT IDENTIFIER	DESCRIPTION	SUGGESTED LIST PRICE USD ($)

Select One Code From Each Required Category

BASE MACHINE

2253XF	AT2016U Bucket & Grapple - Hay & Forage	8,874.00

AT2016U Bucket & Grapple - Hay & Forage
Continued

THIS PAGE IS INTENTIONALLY LEFT BLANK

MJ4062 Grapple Debris Bucket

Equipment for Base Machine

Capacity: 2.25 Cubic Yard
Hydraulic Service: Single Auxiliary
Shipping Weight with Pallet: 2336 lbs.
Quick Attach: Yes
Operational Weight: 2236 lbs.
Heap Capacity: 2-1/2 Cubic Yard
Dimensions: 53 In. H x 65 In. W x 96 In. L

Bolt on Cutting Edge: Optional

CODE	ATTACHMENT IDENTIFIER	DESCRIPTION	SUGGESTED LIST PRICE USD ($)
		Select One Code From Each Required Category	
		BASE MACHINE	
225BXF		MJ4062 Grapple Debris Bucket	11,007.00

MJ4062 Grapple Debris Bucket
Continued

THIS PAGE IS INTENTIONALLY LEFT BLANK

BG1096 Grapple - Brush - Skeleton Bucket

Equipment for Base Machine

Capacity: 1.19 Cubic Yard
Hydraulic Service: Single Auxiliary
Shipping Weight with Pallet: 1880 lbs.
Quick Attach: Yes
Operational Weight: 1780 lbs.
Dimensions: 35 In. H x 43.5 In. W x 99 In. L

CODE	ATTACHMENT IDENTIFIER	DESCRIPTION	SUGGESTED LIST PRICE USD ($)
		Select One Code From Each Required Category	
		BASE MACHINE	
2255XF		BG1096 Grapple - Brush - Skeleton Bucket	13,384.00

BG1096 Grapple - Brush - Skeleton Bucket
Continued

THIS PAGE IS INTENTIONALLY LEFT BLANK

MJ4060A Large Square Bale Fork

Equipment for Base Machine

```
Hydraulic Service: Single Auxiliary
Shipping Weight with Pallet: 990 lbs.
Quick Attach: Yes
Operational Weight: 890 lbs.
Dimensions: 95 In. Tall (Will Extend
  Above 4 x 4 Bales) and 75 In. Wide
```

CODE	ATTACHMENT IDENTIFIER	DESCRIPTION	SUGGESTED LIST PRICE USD ($)
		Select One Code From Each Required Category	
		BASE MACHINE	
2259XF		MJ4060A Large Square Bale Fork *Handles up to two 4 Ft. x 4 Ft. x 8 Ft. bales or three 3 Ft. x 3 Ft. x 8 Ft. bales.*	9,564.00

MJ4060A Large Square Bale Fork
Continued

THIS PAGE IS INTENTIONALLY LEFT BLANK

MJ4074 Bale Fork

Equipment for Base Machine

```
8 Small Square Bales Flat or
  10 On Their Side
Hydraulic Service: Single Auxiliary
Quick Attach: Yes
Operational Weight: 1090 lbs.
Shipping Weight with Pallet: 1190 lbs.
Dimensions: 31 In. H x 80 In. W x 90 In. L
```

CODE	ATTACHMENT IDENTIFIER	DESCRIPTION	SUGGESTED LIST PRICE USD ($)
		Select One Code From Each Required Category	
		BASE MACHINE	
225DXF		MJ4074 Bale Fork *For flat 8 or Index 10 small square.*	8,269.00

MJ4074 Bale Fork
Continued

THIS PAGE IS INTENTIONALLY LEFT BLANK

MJ4076 - 72 In. Manure Fork & Grab

Equipment for Base Machine

Hydraulic Service: Single Auxiliary
Shipping Weight with Pallet: 1677 lbs.
Quick Attach: Yes
Operational Weight: 1577 lbs.
Heap Capacity: 62 Cubic Feet
Dimensions: 57 In. H x 62 In. W x 72 In. L

CODE	ATTACHMENT IDENTIFIER	DESCRIPTION	SUGGESTED LIST PRICE USD ($)
		Select One Code From Each Required Category	
		BASE MACHINE	
225EXF		MJ4076 - 72 In. Manure Fork & Grab *Handles loose material and bales.*	8,810.00

MJ4076 - 72 In. Manure Fork & Grab
Continued

THIS PAGE IS INTENTIONALLY LEFT BLANK

MJ4077 - 96 In. Manure Fork & Grab

Equipment for Base Machine

```
Hydraulic Service: Single Auxiliary
Shipping Weight with Pallet: 1892 lbs.
Quick Attach: Yes
Operational Weight: 1792 lbs.
Heap Capacity: 83 Cubic Feet
Dimensions: 57 In. H x 62 In. W x 96 In. L
```

CODE	ATTACHMENT IDENTIFIER	DESCRIPTION	SUGGESTED LIST PRICE USD ($)
		Select One Code From Each Required Category	
		BASE MACHINE	
225FXF		MJ4077 - 96 In. Manure Fork & Grab *Handles loose material and bales.*	9,159.00

MJ4077 - 96 In. Manure Fork & Grab
Continued

THIS PAGE IS INTENTIONALLY LEFT BLANK

BF1102S Bale Spear - Single or Dual Large Square

Equipment for Base Machine

Shipping Weight: 873 lbs.
Dimensions: 60 In. H x 72 In. W x 60 In. L

CODE	ATTACHMENT IDENTIFIER	DESCRIPTION	SUGGESTED LIST PRICE USD ($)
		Select One Code From Each Required Category	
		BASE MACHINE	
2254XF		BF1102S Bale Spear - Single or Dual Large Square	2,891.00

BF1102S Bale Spear - Single or Dual Large Square
Continued

THIS PAGE IS INTENTIONALLY LEFT BLANK

MJ4037 Single Round Bale Spear

Equipment for Base Machine

```
Capacity: 1 Round Bale
Shipping Weight with Pallet: 334 lbs.
Quick Attach: Yes
Operational Weight: 259 lbs.
Dimensions: 17 In. H x 30 In. W x 49 In. L
```

CODE	ATTACHMENT IDENTIFIER	DESCRIPTION	SUGGESTED LIST PRICE USD ($)
		Select One Code From Each Required Category	
		BASE MACHINE	
2256XF		MJ4037 Single Round Bale Spear	1,852.00

MJ4037 Single Round Bale Spear
Continued

THIS PAGE IS INTENTIONALLY LEFT BLANK

MJ4081 Bale Spear

Equipment for Base Machine

```
Capacity: Two Round Bales or
  One Large Square Bale
Shipping Weight with Pallet: 465 lbs.
Quick Attach: Yes
Operational Weight: 390 lbs.
Dimensions: 17 In. H x 25 In. W x 70 In. L
```

CODE	ATTACHMENT IDENTIFIER	DESCRIPTION	SUGGESTED LIST PRICE USD ($)
		Select One Code From Each Required Category	
		BASE MACHINE	
225HXF		MJ4081 Bale Spear *Dual round or single square.*	1,822.00

MJ4081 Bale Spear
Continued

THIS PAGE IS INTENTIONALLY LEFT BLANK

MJ4090 Bale Squeeze

Equipment for Base Machine

Hydraulic Services: Single Auxiliary
Shipping Weight with Pallet: 1850 lbs.
Quick Attach: Yes
Operational Weight: 1600 lbs.
Dimensions: 40 In. H x 92 In. W x 104 In. L
Carrying Capacity: 4000 lbs.
Maximum Width: 110 In.

CODE	ATTACHMENT IDENTIFIER	DESCRIPTION	SUGGESTED LIST PRICE USD ($)
		Select One Code From Each Required Category	
		BASE MACHINE	
225KXF		MJ4090 Bale Squeeze *Maximum width 110 In.*	10,370.00

MJ4090 Bale Squeeze
Continued

THIS PAGE IS INTENTIONALLY LEFT BLANK

MJ4091 Bale Squeeze

Equipment for Base Machine

```
Hydraulic Services: Single Auxiliary
Shipping Weight with Pallet: 1650 lbs.
Quick Attach: Yes
Operational Weight: 1400 lbs.
Dimensions: 40 In. H x 60 In. W x 106 In. L
Carrying Capacity: 2000 lbs.
Maximum Width: 48 In.
```

CODE	ATTACHMENT IDENTIFIER	DESCRIPTION	SUGGESTED LIST PRICE USD ($)
		Select One Code From Each Required Category	
		BASE MACHINE	
225LXF		MJ4091 Bale Squeeze *Maximum width 48 In.*	6,355.00

MJ4091 Bale Squeeze
Continued

THIS PAGE IS INTENTIONALLY LEFT BLANK

MJ4099 Round Bale Hugger

Equipment for Base Machine

```
Capacity: 1 Round Bale
Hydraulic Service: Single Auxiliary
Shipping Weight with Pallet: 825 lbs.
Quick Attach: Yes
Operational Weight: 725 lbs.
Dimensions: 50 In. H x 57 In. W x 60 In. L
```

CODE	ATTACHMENT IDENTIFIER	DESCRIPTION	SUGGESTED LIST PRICE USD ($)
		Select One Code From Each Required Category	
		BASE MACHINE	
225NXF		MJ4099 Round Bale Hugger *Maximum to 5 1/2 Ft. diameter.*	3,641.00

MJ4099 Round Bale Hugger
Continued

THIS PAGE IS INTENTIONALLY LEFT BLANK

MJ4059A Bucket - Light Material Handling (3.25 Cubic Yard) with Cutting Edge

Equipment for Base Machine

```
Capacity: 3.25 Cubic Yard
Weight with Pallet: 1529 lbs.
Quick Attach: Yes
Operational Weight: 1429 lbs.
Heap Capacity: 3-1/4 Cubic Yard
Dimensions: 56 In. H x 62 In. W x 96 In. L
```

CODE	ATTACHMENT IDENTIFIER	DESCRIPTION	SUGGESTED LIST PRICE USD ($)

Select One Code From Each Required Category

BASE MACHINE

2258XF	MJ4059A Bucket - Light Material Handling (3.25 Cubic Yard) with Cutting Edge	5,218.00

MJ4059A Bucket - Light Material Handling (3.25 Cubic Yard) with Cutting Edge
Continued

THIS PAGE IS INTENTIONALLY LEFT BLANK

MJ4061A Bucket - Light Material Handling (2.50 Cubic Yard) with Cutting Edge

Equipment for Base Machine

```
Capacity: 2.50 Cubic Yard
Shipping Weight with Pallet: 1386 lbs.
Quick Attach: Yes
Operational Weight: 1286 lbs.
Heap Capacity: 2-1/2 Cubic Yard
Dimensions: 51 In. H x 55 In. W x 96 In. L
```

CODE	ATTACHMENT IDENTIFIER	DESCRIPTION	SUGGESTED LIST PRICE USD ($)
		Select One Code From Each Required Category	
		BASE MACHINE	
225AXF		MJ4061A Bucket - Light Material Handling (2.50 Cubic Yard) with Cutting Edge	5,413.00

MJ4061A Bucket - Light Material Handling (2.50 Cubic Yard) with Cutting Edge
Continued

THIS PAGE IS INTENTIONALLY LEFT BLANK

MJ4063A Bucket - Light Material Handling (2.25 Cubic Yard) with Cutting Edge

Equipment for Base Machine

```
Capacity: 2.25 Cubic Yard
Shipping Weight with Pallet: 1378 lbs.
Quick Attach: Yes
Operational Weight: 1278 lbs.
Heap Capacity: 2-1/2 Cubic Yard
Dimensions: 48 In. H x 52 In. W x 96 In. L
```

CODE	ATTACHMENT IDENTIFIER	DESCRIPTION	SUGGESTED LIST PRICE USD ($)

Select One Code From Each Required Category

BASE MACHINE

225CXF	MJ4063A Bucket - Light Material Handling (2.25 Cubic Yard) with Cutting Edge	4,497.00

MJ4063A Bucket - Light Material Handling (2.25 Cubic Yard) with Cutting Edge
Continued

THIS PAGE IS INTENTIONALLY LEFT BLANK

MJ4079A Bucket - General Purpose (1.75 Cubic Yard) with Cutting Edge

Equipment for Base Machine

```
Capacity: 1.75 Cubic Yard
Shipping Weight with Pallet: 1256 lbs.
Quick Attach: Yes
Operational Weight: 1156 lbs.
Heap Capacity: 1-3/4 Cubic Yard
Dimensions: 45 In. H x 45 In. W x 96 In. L
```

CODE	ATTACHMENT IDENTIFIER	DESCRIPTION	SUGGESTED LIST PRICE USD ($)
		Select One Code From Each Required Category	
		BASE MACHINE	
225GXF		MJ4079A Bucket - General Purpose (1.75 Cubic Yard) with Cutting Edge	4,434.00

MJ4079A Bucket - General Purpose (1.75 Cubic Yard) with Cutting Edge
Continued

THIS PAGE IS INTENTIONALLY LEFT BLANK

MJ4118 Bucket - Silage & Light Materials (2.50 Cubic Yard) with Cutting Edge

Equipment for Base Machine

Capacity: 2.50 Cubic Yards
Shipping Weight: 1672 lbs.
Shipping Weight with Pallet: 1672 lbs.
Quick Attach: Yes
Operational Weight: 1572 lbs.
Heap Capacity: 2-1/2 Cubic Yards
Dimensions: 49 In. H x 55 In. W x 96 In. L

CODE	ATTACHMENT IDENTIFIER	DESCRIPTION	SUGGESTED LIST PRICE USD ($)

Select One Code From Each Required Category

BASE MACHINE

225OXF	MJ4118 Bucket - Silage & Light Materials (2.50 Cubic Yard) with Cutting Edge	6,560.00

MJ4118 Bucket - Silage & Light Materials (2.50 Cubic Yard) with Cutting Edge
Continued

THIS PAGE IS INTENTIONALLY LEFT BLANK

MJ4058 - 48 In. Quick Attach Carriage

Equipment for Base Machine

Shipping Weight with Pallet: 477 lbs.
Quick Attach: Yes
Operational Weight: 402 lbs.
Heap Capacity: 6000 lbs.
Forks: Not Included
Dimensions: 18 In. H x 48 In. W x 49 In. L
42 In. Pallet Forks: Optional
48 In. Pallet Forks: Optional
60 In. Pallet Forks: Optional

CODE	ATTACHMENT IDENTIFIER	DESCRIPTION	SUGGESTED LIST PRICE USD ($)
		Select One Code From Each Required Category	
		BASE MACHINE	
2257XF		MJ4058 - 48 In. Quick Attach Carriage *Forks not included.*	2,225.00
		ATTACHMENTS - ORDER AS DESIRED	
9000		42 In. Pallet Forks (Pair)	778.00
9010		48 In. Pallet Forks (Pair)	1,273.00
9020		60 In. Pallet forks (Pair)	1,465.00
		ATTACHMENTS FOR FIELD CONVERSION	
		Miscellaneous:	
	5MP11906	42 In. Pallet Forks (Pair)	840.24
	5MP11907	48 In. Pallet Forks (Pair)	1,374.84
	5MP12262	60 In. Pallet Forks (Pair)	1,582.20

MJ4058 - 48 In. Quick Attach Carriage
Continued

THIS PAGE IS INTENTIONALLY LEFT BLANK

MJ4084 - 48 In. Quick Attach Side Tilt Carriage

Equipment for Base Machine

Single Auxiliary Hydraulic Service
Shipping Weight with Pallet: 870 lbs.
Quick Attach: Yes
Heap Capacity: 6000 lbs.
Forks: Not Included
Dimensions: 28 In. H x 48 In. W x 49 In. L
42 In. Pallet Forks: Optional
48 In. Pallet Forks: Optional
60 In. Pallet Forks: Optional

CODE	ATTACHMENT IDENTIFIER	DESCRIPTION	SUGGESTED LIST PRICE USD ($)
		Select One Code From Each Required Category	
		BASE MACHINE	
225IXF		MJ4084 - 48 In. Quick Attach Side Tilt Carriage *Forks not included.*	4,461.00
		ATTACHMENTS - ORDER AS DESIRED	
9000		42 In. Pallet Forks (Pair)	778.00
9010		48 In. Pallet Forks (Pair)	1,273.00
9020		60 In. Pallet forks (Pair)	1,465.00
		ATTACHMENTS FOR FIELD CONVERSION	
		Miscellaneous:	
	5MP11906	42 In. Pallet Forks (Pair)	840.24
	5MP11907	48 In. Pallet Forks (Pair)	1,374.84
	5MP12262	60 In. Pallet Forks (Pair)	1,582.20

MJ4084 - 48 In. Quick Attach Side Tilt Carriage
Continued

THIS PAGE IS INTENTIONALLY LEFT BLANK

MJ4085 - 48 In. Quick Attach Side Shift Carriage

Equipment for Base Machine

Hydraulic Service: Single Auxiliary
Shipping Weight with Pallet: 884 lbs.
Quick Attach: Yes
Operational Weight: 809 lbs.
Heap Capacity: 6000 lbs.
Forks: Not Included
Dimensions: 17 In. H x 48 In. W x 49 In. L
42 In. Pallet Forks: Optional
48 In. Pallet Forks: Optional
60 In. Pallet Forks: Optional

CODE	ATTACHMENT IDENTIFIER	DESCRIPTION	SUGGESTED LIST PRICE USD ($)
		Select One Code From Each Required Category	
		BASE MACHINE	
225JXF		MJ4085 - 48 In. Quick Attach Side Shift Carriage *Forks not included.*	5,069.00
		ATTACHMENTS - ORDER AS DESIRED	
9000		42 In. Pallet Forks (Pair)	778.00
9010		48 In. Pallet Forks (Pair)	1,273.00
9020		60 In. Pallet forks (Pair)	1,465.00
		ATTACHMENTS FOR FIELD CONVERSION	
		Miscellaneous:	
	5MP11906	42 In. Pallet Forks (Pair)	840.24
	5MP11907	48 In. Pallet Forks (Pair)	1,374.84
	5MP12262	60 In. Pallet Forks (Pair)	1,582.20

MJ4085 - 48 In. Quick Attach Side Shift Carriage
Continued

THIS PAGE IS INTENTIONALLY LEFT BLANK

QC1072 - 72 In. Quick Attach Carriage

Equipment for Base Machine

```
Shipping Weight: 469 lbs.
Forks: Not Included
Dimensions: 18 In. H x 48 In. W x 74 In. L
42 In. Pallet Forks: Optional
48 In. Pallet Forks: Optional
60 In. Pallet Forks: Optional
```

CODE	ATTACHMENT IDENTIFIER	DESCRIPTION	SUGGESTED LIST PRICE USD ($)
		Select One Code From Each Required Category	
		BASE MACHINE	
225QXF		QC1072 - 72 In. Quick Attach Carriage *Forks not included.*	3,457.00
		ATTACHMENTS - ORDER AS DESIRED	
9000		42 In. Pallet Forks (Pair)	778.00
9010		48 In. Pallet Forks (Pair)	1,273.00
9020		60 In. Pallet forks (Pair)	1,465.00
		ATTACHMENTS FOR FIELD CONVERSION	
		Miscellaneous:	
	5MP11906	42 In. Pallet Forks (Pair)	840.24
	5MP11907	48 In. Pallet Forks (Pair)	1,374.84
	5MP12262	60 In. Pallet Forks (Pair)	1,582.20

QC1072 - 72 In. Quick Attach Carriage
Continued

THIS PAGE IS INTENTIONALLY LEFT BLANK

SD1096A Silage Defacer without Auxiliary Hydraulic Motor Kit for 3800/3220/3420 Telehandlers

Equipment for Base Machine

```
Cutting Tooth: Non-sizing
Bearings: Greaseable Spherical Type
Motor Shaft: 1.5 In.
Cutting Width: 96 Ins.
Drive System: 80 ASA Chain
```

CODE	ATTACHMENT IDENTIFIER	DESCRIPTION	SUGGESTED LIST PRICE USD ($)
		Select One Code From Each Required Category	
		BASE MACHINE	
225PXF		SD1096A Silage Defacer without Auxiliary Hydraulic Motor Kit for 3800/3220/3420 Telehandlers	8,093.00

SD1096A Silage Defacer without Auxiliary Hydraulic Motor Kit for 3800/3220/3420 Telehandlers

Continued

THIS PAGE IS INTENTIONALLY LEFT BLANK

AB11E Single Tine Bale Spear for Current 300CX/400/500 Series Carrier

Equipment for Base Machine

```
Primary Spear: One - 49 In. x 2 In.
  Approximate 44 In. Usable Length
Stabilizing Spears:
  One - 20 In. x 1.25 In.
Capacity:
  One Large Round Bale (2000 lbs.)
Dimensions: 21H x 50W x 52L
  (300, 400, and 500 Series Loaders)
```

```
Operational Weight: 125 lbs.
  (300, 400, and 500 Series Loaders)
```

CODE	ATTACHMENT IDENTIFIER	DESCRIPTION	SUGGESTED LIST PRICE USD ($)
		Select One Code From Each Required Category	
		BASE MACHINE	
2002XF		AB11E Single Tine Bale Spear for Current 300CX/400/500 Series Carrier *Note: Reference Frontier Loader Attachment Compatibility Chart for specific loader compatibility.*	590.00
		ATTACHMENTS - ORDER AS DESIRED	
9200		French Operators Manual and Decal Kit (AB11, AB12, AB13 and AB14 Series)	No Charge
		ATTACHMENTS FOR FIELD CONVERSION	
		Miscellaneous:	
	5MP43053	French Operator's Manual and Decal Kit for AB11, AB12, AB13 and AB14 Bale Spears and AP12 and AP13 Pallet Forks	0.00

THIS PAGE IS INTENTIONALLY LEFT BLANK

AB11D Single Tine Bale Spear for Current 600/700 Series Carrier

Equipment for Base Machine

```
Primary Spear: One - 49 In. x 2 In.
  Approximate 44 In. Usable Length
Stabilizing Spears:
  One - 20 In. x 1.25 In.
Capacity:
  One Large Round Bale (2000 lbs.)
Dimensions: 24H x 50W x 56L
  (600 and 700 Series Loaders)
```

```
Operational Weight: 170 lbs.
  (600 and 700 Series Loaders)
```

CODE	ATTACHMENT IDENTIFIER	DESCRIPTION	SUGGESTED LIST PRICE USD ($)

Select One Code From Each Required Category

BASE MACHINE

2001XF		AB11D Single Tine Bale Spear for Current 600/700 Series Carrier *Note: Reference Frontier Loader Attachment Compatibility Chart for specific loader compatibility.*	813.00

ATTACHMENTS - ORDER AS DESIRED

9200		French Operators Manual and Decal Kit (AB11, AB12, AB13 and AB14 Series)	No Charge

ATTACHMENTS FOR FIELD CONVERSION

		Miscellaneous:	
	5MP43053	French Operator's Manual and Decal Kit for AB11, AB12, AB13 and AB14 Bale Spears and AP12 and AP13 Pallet Forks	0.00

THIS PAGE IS INTENTIONALLY LEFT BLANK

AB11G Single Tine Bale Spear for Current Loaders with Global Carrier

Equipment for Base Machine

```
Primary Spear: One - 49 In. x 2 In.
  Approximate 44 In. Usable Length
Stabilizing Spears:
 One - 20 In. x 1.25 In.
Capacity:
  One Large Round Bale (2000 lbs.)
Dimensions: 20H x 46W x 54L
  (Global Series Loaders)
```

```
Operational Weight: 138 lbs.
  (Global Series Loaders)
```

CODE	ATTACHMENT IDENTIFIER	DESCRIPTION	SUGGESTED LIST PRICE USD ($)

Select One Code From Each Required Category

BASE MACHINE

2003XF		AB11G Single Tine Bale Spear for Current Loaders with Global Carrier *Note: Option is not compatible with Global Category II Carrier. Reference Frontier Loader Attachment Compatibility Chart for specific loader compatibility.*	774.00

ATTACHMENTS - ORDER AS DESIRED

9200		French Operators Manual and Decal Kit (AB11, AB12, AB13 and AB14 Series)	No Charge

ATTACHMENTS FOR FIELD CONVERSION

		Miscellaneous:	
	5MP43053	French Operator's Manual and Decal Kit for AB11, AB12, AB13 and AB14 Bale Spears and AP12 and AP13 Pallet Forks	0.00

THIS PAGE IS INTENTIONALLY LEFT BLANK

AB12E Three Tine Bale Spear for Current 300CX/400/500 Series Carrier

Equipment for Base Machine

```
Primary Spears: Three - 49 In. x 2 In.                    (300CX, 400, and 500 Series Loaders)
  (Approximate 44 In. Usable Length)
Capacity:
  One Large Round Bale (2500 lbs.)
  or One Large Square Bale (2500 lbs.)
Dimensions: 21H x 50W x 52L
  (300CX, 400, and 500 Series Loaders)
Operational Weight: 155 lbs.
```

CODE	ATTACHMENT IDENTIFIER	DESCRIPTION	SUGGESTED LIST PRICE USD ($)
		Select One Code From Each Required Category	
		BASE MACHINE	
2013XF		AB12E Three Tine Bale Spear for Current 300CX/400/500 Series Carrier *Note: Reference Frontier Loader Attachment Compatibility Chart for specific loader compatibility.*	774.00
		ATTACHMENTS - ORDER AS DESIRED	
9200		French Operators Manual and Decal Kit (AB11, AB12, AB13 and AB14 Series)	No Charge
		ATTACHMENTS FOR FIELD CONVERSION	
		Miscellaneous:	
	5MP43053	French Operator's Manual and Decal Kit for AB11, AB12, AB13 and AB14 Bale Spears and AP12 and AP13 Pallet Forks	0.00

THIS PAGE IS INTENTIONALLY LEFT BLANK

AB12D Three Tine Bale Spear for Current 600/700 Series Carrier

Equipment for Base Machine

```
Primary Spears: Three - 49 In. x 2 In.                    (600 and 700 Series Loaders)
  (Approximate 44 In. Usable Length)
Capacity:
  One Large Round Bale (2500 lbs.)
  or One Large Square Bale (2500 lbs.)
Dimensions: 24H x 50W x 56L
  (600 and 700 Series Loaders)
Operational Weight: 210 lbs.
```

CODE	ATTACHMENT IDENTIFIER	DESCRIPTION	SUGGESTED LIST PRICE USD ($)
		Select One Code From Each Required Category	
		BASE MACHINE	
2012XF		AB12D Three Tine Bale Spear for Current 600/700 Series Carrier *Note: Reference Frontier Loader Attachment Compatibility Chart for specific loader compatibility.*	920.00
		ATTACHMENTS - ORDER AS DESIRED	
9200		French Operators Manual and Decal Kit (AB11, AB12, AB13 and AB14 Series)	No Charge
		ATTACHMENTS FOR FIELD CONVERSION	
		Miscellaneous:	
	5MP43053	French Operator's Manual and Decal Kit for AB11, AB12, AB13 and AB14 Bale Spears and AP12 and AP13 Pallet Forks	0.00

THIS PAGE IS INTENTIONALLY LEFT BLANK

AB12G Three Tine Bale Spear for Current Loaders with Global Carrier

Equipment for Base Machine

```
Primary Spears: Three - 49 In. x 2 In.                    (Global Series Loaders)
  (Approximate 44 In. Usable Length)
Capacity:
  One Large Round Bale (2500 lbs.)
  or One Large Square Bale (2500 lbs.)
Dimensions: 20H x 46W x 54L
  (Global Series Loaders)
Operational weight: 173 lbs.
```

CODE	ATTACHMENT IDENTIFIER	DESCRIPTION	SUGGESTED LIST PRICE USD ($)
		Select One Code From Each Required Category	
		BASE MACHINE	
2014XF		AB12G Three Tine Bale Spear for Current Loaders with Global Carrier *Note: Option is not compatible with Global Category II Carrier. Reference Frontier Loader Attachment Compatibility Chart for specific loader compatibility.*	885.00
		ATTACHMENTS - ORDER AS DESIRED	
9200		French Operators Manual and Decal Kit (AB11, AB12, AB13 and AB14 Series)	No Charge
		ATTACHMENTS FOR FIELD CONVERSION	
		Miscellaneous:	
	5MP43053	French Operator's Manual and Decal Kit for AB11, AB12, AB13 and AB14 Bale Spears and AP12 and AP13 Pallet Forks	0.00

THIS PAGE IS INTENTIONALLY LEFT BLANK

AB12A Three Tine Bale Spear for Current 800 Series Carrier

Equipment for Base Machine

```
Primary Spears: Three - 49 In. x 2 In.                    (800 Series Loaders)
  (Approximate 44 In. Usable Length)
Capacity:
  One Large Round Bale (2500 lbs.)
  or One Large Square Bale (2500 lbs.)
Dimensions: 25H x 55W x 58L
  (800 Series Loaders)
Operational weight: 255 lbs.
```

CODE	ATTACHMENT IDENTIFIER	DESCRIPTION	SUGGESTED LIST PRICE USD ($)
		Select One Code From Each Required Category	
		BASE MACHINE	
2011XF		AB12A Three Tine Bale Spear for Current 800 Series Carrier *Note: Reference Frontier Loader Attachment Compatibility Chart for specific loader compatibility.*	1,099.00
		ATTACHMENTS - ORDER AS DESIRED	
9200		French Operators Manual and Decal Kit (AB11, AB12, AB13 and AB14 Series)	No Charge
		ATTACHMENTS FOR FIELD CONVERSION	
		Miscellaneous:	
	5MP43053	French Operator's Manual and Decal Kit for AB11, AB12, AB13 and AB14 Bale Spears and AP12 and AP13 Pallet Forks	0.00

THIS PAGE IS INTENTIONALLY LEFT BLANK

AB13E Heavy Duty Single Tine Bale Spear for Current 300CX/400/500 Series Carrier

Equipment for Base Machine

```
Primary Spear: One - 53 In. x 2.25 In.
  (Approximate 46 In. Usable Length)
Stabilizing Spears:
  Two - 20 In. x 1.25 In.
Capacity:
  One Large Round Bale (2500 lbs.)
Dimensions: 20H x 49W x 56L
  (300, 400, and 500 Series Loaders)
```

```
Operational Weight: 165 lbs.
  (300, 400, and 500 Series Loaders)
```

CODE	ATTACHMENT IDENTIFIER	DESCRIPTION	SUGGESTED LIST PRICE USD ($)
		Select One Code From Each Required Category	
		BASE MACHINE	
2022XF		AB13E Heavy Duty Single Tine Bale Spear for Current 300CX/400/500 Series Carrier *Note: Reference Frontier Loader Attachment Compatibility Chart for specific loader compatibility.*	773.00
		ATTACHMENTS - ORDER AS DESIRED	
9200		French Operators Manual and Decal Kit (AB11, AB12, AB13 and AB14 Series)	No Charge
		ATTACHMENTS FOR FIELD CONVERSION	
		Miscellaneous:	
	5MP43053	French Operator's Manual and Decal Kit for AB11, AB12, AB13 and AB14 Bale Spears and AP12 and AP13 Pallet Forks	0.00

THIS PAGE IS INTENTIONALLY LEFT BLANK

AB13D Heavy Duty Single Tine Bale Spear for Current 600/700 Series Carrier

Equipment for Base Machine

```
Primary Spear: One - 53 In. x 2.25 In.
  (Approximate 46 In. Usable Length)
Stabilizing Spears:
  Two - 20 In. x 1.25 In.
Capacity:
  One Large Round Bale (2500 lbs.)
Dimensions: 24H x 50W x 59L
  (600 and 700 Series Loaders)
```

```
Operational Weight: 215 lbs.
  (600 and 700 Series Loaders)
```

CODE	ATTACHMENT IDENTIFIER	DESCRIPTION	SUGGESTED LIST PRICE USD ($)
		Select One Code From Each Required Category	
		BASE MACHINE	
2021XF		AB13D Heavy Duty Single Tine Bale Spear for Current 600/700 Series Carrier *Note: Reference Frontier Loader Attachment Compatibility Chart for specific loader compatibility.*	917.00
		ATTACHMENTS - ORDER AS DESIRED	
9200		French Operators Manual and Decal Kit (AB11, AB12, AB13 and AB14 Series)	No Charge
		ATTACHMENTS FOR FIELD CONVERSION	
		Miscellaneous:	
	5MP43053	French Operator's Manual and Decal Kit for AB11, AB12, AB13 and AB14 Bale Spears and AP12 and AP13 Pallet Forks	0.00

THIS PAGE IS INTENTIONALLY LEFT BLANK

AB13G Heavy Duty Single Tine Bale Spear for Current Loaders with Global Carrier

Equipment for Base Machine

```
Primary Spear: One - 53 In. x 2.25 In.
  (Approximate 46 In. Usable Length)
Stabilizing Spears:
  Two - 20 In. x 1.25 In.
Capacity:
  One Large Round Bale (2500 lbs.)
Dimensions: 23H x 46W x 56L
  (Global Series Loaders)
```

```
Operational Weight: 185 lbs.
  (Global Series Loaders)
```

CODE	ATTACHMENT IDENTIFIER	DESCRIPTION	SUGGESTED LIST PRICE USD ($)
		Select One Code From Each Required Category	
		BASE MACHINE	
2023XF		AB13G Heavy Duty Single Tine Bale Spear for Current Loaders with Global Carrier *Note: Option is not compatible with Global Category II Carrier. Reference Frontier Loader Attachment Compatibility Chart for specific loader compatibility.*	921.00
		ATTACHMENTS - ORDER AS DESIRED	
9200		French Operators Manual and Decal Kit (AB11, AB12, AB13 and AB14 Series)	No Charge
		ATTACHMENTS FOR FIELD CONVERSION	
		Miscellaneous:	
	5MP43053	French Operator's Manual and Decal Kit for AB11, AB12, AB13 and AB14 Bale Spears and AP12 and AP13 Pallet Forks	0.00

THIS PAGE IS INTENTIONALLY LEFT BLANK

AB13K Heavy Duty Single Tine Bale Spear for Current Loaders with Global Category 2 Carrier (H480 Loader only)

Equipment for Base Machine

```
Primary Spear: One - 53 In. x 2.25 In.
  (Approximate 46 In. Usable Length)
Stabilizing Spears:
  Two - 20 In. x 1.25 In.
Capacity:
  One Large Round Bale (3000 lbs.)
Dimensions: 29H x 59W x 63L
  (Global Category 2 Carrier, H480 Loader)
```

```
Operational Weight: 331 lbs.
  (Global Category 2 Carrier, H480 Loader)
```

CODE	ATTACHMENT IDENTIFIER	DESCRIPTION	SUGGESTED LIST PRICE USD ($)
		Select One Code From Each Required Category	
		BASE MACHINE	
2164XF		AB13K Heavy Duty Single Tine Bale Spear for Current Loaders with Global Category 2 Carrier (H480 Loader only) *Note: Reference Frontier Loader Attachment Compatibility Chart for specific loader compatibility.*	1,093.00

THIS PAGE IS INTENTIONALLY LEFT BLANK

AB14A - Bale Spear

Equipment for Base Machine

```
Primary Spears:
  Two - 49 In. x 2 In.
Stabilizing Spears:
  Two - 28 In. x 1.25 In.
Shipping Weight: 465 lbs.
Operational Weight: 390 lbs.
Dimensions: 17H x 25W x 70L
```

CODE	ATTACHMENT IDENTIFIER	DESCRIPTION	SUGGESTED LIST PRICE USD ($)
		Select One Code From Each Required Category	
		BASE MACHINE	
2031XF		AB14A - Bale Spear *Handles (2) 6 Ft. or less round bales or (1) 4 x 8 square bale with 800 series loaders.* *Note: Reference Frontier Loader Attachment Compatibility Chart for specific loader compatibility.*	1,645.00
		ATTACHMENTS - ORDER AS DESIRED	
9200		French Operators Manual and Decal Kit (AB11, AB12, AB13 and AB14 Series)	No Charge
		ATTACHMENTS FOR FIELD CONVERSION	
		Miscellaneous:	
	5MP43053	French Operator's Manual and Decal Kit for AB11, AB12, AB13 and AB14 Bale Spears and AP12 and AP13 Pallet Forks	0.00

THIS PAGE IS INTENTIONALLY LEFT BLANK

AB14D - Bale Spear

Equipment for Base Machine

```
Primary Spears:
  Two - 49 In. x 2 In.
Stabilizing Spears:
  Two - 28 In. x 1.25 In.
Shipping Weight: 465 lbs.
Operational Weight: 390 lbs.
Dimensions: 17H x 25W x 70L
```

CODE	ATTACHMENT IDENTIFIER	DESCRIPTION	SUGGESTED LIST PRICE USD ($)
		Select One Code From Each Required Category	
		BASE MACHINE	
2032XF		AB14D - Bale Spear *Handles (2) 6 Ft. or less round bales with 700 series loaders OR (1) 4 x 8 square bale with 600 and 700 series loaders.* *Note: Reference Frontier Loader Attachment Compatibility Chart for specific loader compatibility.*	1,405.00
		ATTACHMENTS - ORDER AS DESIRED	
9200		French Operators Manual and Decal Kit (AB11, AB12, AB13 and AB14 Series)	No Charge
		ATTACHMENTS FOR FIELD CONVERSION	
		Miscellaneous:	
	5MP43053	French Operator's Manual and Decal Kit for AB11, AB12, AB13 and AB14 Bale Spears and AP12 and AP13 Pallet Forks	0.00

THIS PAGE IS INTENTIONALLY LEFT BLANK

AB14G - Bale Spear

Equipment for Base Machine

```
Primary Spears:
  Two - 49 In. x 2 In.
Stabilizing Spears:
  Two - 28 In. x 1.25 In.
Shipping Weight: 465 lbs.
Operational Weight: 390 lbs.
Dimensions: 17H x 25W x 70L
```

CODE	ATTACHMENT IDENTIFIER	DESCRIPTION	SUGGESTED LIST PRICE USD ($)
		Select One Code From Each Required Category	
		BASE MACHINE	
2033XF		AB14G - Bale Spear *Handles (2) 6 Ft. or less round bales or (1) 4 x 8 square bale on loaders with Global Carrier. Note: Option is not compatible with Global Category II Carrier. Reference Frontier Loader Attachment Compatibility Chart for specific loader compatibility.*	1,394.00
		ATTACHMENTS - ORDER AS DESIRED	
9200		French Operators Manual and Decal Kit (AB11, AB12, AB13 and AB14 Series)	No Charge
		ATTACHMENTS FOR FIELD CONVERSION	
		Miscellaneous:	
	5MP43053	French Operator's Manual and Decal Kit for AB11, AB12, AB13 and AB14 Bale Spears and AP12 and AP13 Pallet Forks	0.00

THIS PAGE IS INTENTIONALLY LEFT BLANK

AB14K Heavy Duty Bale Spear for Loaders with Global Category 2 Carrier

Equipment for Base Machine

Two Primary Spear Options:
  Two - 53 In. x 2.2 In.
  Two - 41 In. x 2.2 In.
Stabilizing Spears:
  Two - 20 In. x 1.25 In.
Capacity: Two Large Round Bales / One Large Square Bale
Shipping Weight: 436 lbs.

Operational Weight: 511 lbs.
Dimensions:29H x 81W x 61L

CODE	ATTACHMENT IDENTIFIER	DESCRIPTION	SUGGESTED LIST PRICE USD ($)
		Select One Code From Each Required Category	
		BASE MACHINE	
2291XF		AB14K Heavy Duty Bale Spear for Loaders with Global Category 2 Carrier *Handles (2) 6 Ft. or less round bales or (1) 4 x 8 square bale on loaders with Global Category 2 Carrier.* *Reference Frontier Loader Attachment Compatibility Chart for specific loader compatibility.*	1,804.00
		BALE SPEAR LENGTH	
2410		41 In. Bale Spear *For use with 3 Ft. x 4 Ft. x 8 Ft. Square Bales.*	285.00
2411		53 In. Bale Spear *For use with 4 Ft. x 4 Ft. x 8 Ft. Square Bales.*	300.00
		ATTACHMENTS - ORDER AS DESIRED	
9200		French Operators Manual and Decal Kit (AB11, AB12, AB13 and AB14 Series)	No Charge

THIS PAGE IS INTENTIONALLY LEFT BLANK

AB15A - Bale Spear

Equipment for Base Machine

```
Two Primary Bottom Spear Options:
  Four - 53 In. x 2.2 In.
  Four - 41 In. x 2.2 In.
Top Stabilizing Spears:
  Two - 28 In. x 1.25 In.
Capacity: Two Large Square Bales
Operational Weight: 808 lbs.
Shipping Weight: 873 lbs.
```

```
Dimensions: 60H x 72W x 60L
```

CODE	ATTACHMENT IDENTIFIER	DESCRIPTION	SUGGESTED LIST PRICE USD ($)
		Select One Code From Each Required Category	
		BASE MACHINE	
2041XF		AB15A - Bale Spear *Handles two large 4 x 8 square bales for use with 800 series loaders.* *Note: Reference Frontier Loader Attachment Compatibility Chart for specific loader compatibility.*	4,341.00
		BALE SPEAR LENGTH	
2410		41 In. Bale Spear *For use with 3 Ft. x 4 Ft. x 8 Ft. Square Bales.*	590.00
2411		53 In. Bale Spear *For use with 4 Ft. x 4 Ft. x 8 Ft. Square Bales.*	619.00
		ATTACHMENTS - ORDER AS DESIRED	
9200		French Operators Manual and Decal Kit (AB11, AB12, AB13 and AB14 Series)	No Charge
		ATTACHMENTS FOR FIELD CONVERSION	
		Miscellaneous:	
	5MP43053	French Operator's Manual and Decal Kit for AB11, AB12, AB13 and AB14 Bale Spears and AP12 and AP13 Pallet Forks	0.00

THIS PAGE IS INTENTIONALLY LEFT BLANK

AB15K Heavy Duty Bale Spear for 2 Large Square Bales for Loaders with Global Category 2 Carrier

Equipment for Base Machine

```
Two Primary Bottom Spear Options:
  Four - 53 In. x 2.2 In.
  Four - 41 In. x 2.2 In.
Top Stabilizing Spears:
  Two - 28 In. x 1.25 In.
Capacity: Two Large Square Bales
Operational Weight: 800 lbs.
Shipping Weight: 875 lbs.
```

```
Dimensions: 69H x 72W x 60L
```

CODE	ATTACHMENT IDENTIFIER	DESCRIPTION	SUGGESTED LIST PRICE USD ($)

Select One Code From Each Required Category

BASE MACHINE

2301XF	AB15K Heavy Duty Bale Spear for 2 Large Square Bales for Loaders with Global Category 2 Carrier *Handles two large 4 x 8 square bales on loaders with Global Category 2 Carrier.* *Note: Reference Frontier Loader Attachment Compatibility Chart for specific loader compatibility.*	3,743.00

BALE SPEAR LENGTH

2410	41 In. Bale Spear *For use with 3 Ft. x 4 Ft. x 8 Ft. Square Bales.*	590.00
2411	53 In. Bale Spear *For use with 4 Ft. x 4 Ft. x 8 Ft. Square Bales.*	619.00

ATTACHMENTS - ORDER AS DESIRED

9200	French Operators Manual and Decal Kit (AB11, AB12, AB13 and AB14 Series)	No Charge

THIS PAGE IS INTENTIONALLY LEFT BLANK

BD1108 End Wheel Grain Drill, 7.5 In. Spacing, 13 Openers, and Standard Grain Agitator

Equipment for Base Machine

Number of Openers: 13
Available Row Spacings: 7.5 In.
Working Width: 8 Ft. 1 In.
Transport Width: 10 Ft.
Opener Type: 13 In. Double Disk /
  Staggered Pattern
Seedboot Types:
  Cast Aluminum or Cast Iron
Opener Downpressure:
  124 lbs. Maximum
Metering: Fluted Feed
Transport Ground Clearance: 5.5 In.
Weight with Plain Box
  (7.5 In. Spacing): 1,330 lb.
Weight with Combo Box
  (7.5 In. Spacing): 1,475 lb.
Tires:
  7.5-20, 4PR Rib Implement OR
  7.5-20, 4PR Double-Rib Implement
Box Capacity (Plain Box):
  2.8 Bushel/Ft. - 22.4 Bushel
Box Capacity (Combo Box):
  3.4 Bushel/Ft.
40 Percent Grain: 10.8 Bushel
60 Percent Grain: 14.6 Bushel
100 Percent Grain: 22.1 Bushel
Box Capacity (Grass Seed):
  1.5 Bushel
Acremeter: Standard
Assembly/Set-Up Time: 3 Man-Hours
  for Base Machine, 1 Additional Hour
  for Grass Seed Attachment
Warranty: 1 Year Parts and Labor

CODE	ATTACHMENT IDENTIFIER	DESCRIPTION	SUGGESTED LIST PRICE USD ($)
		Select One Code From Each Required Category	
		BASE MACHINE	
3001XF		BD1108 End Wheel Grain Drill, 7.5 In. Spacing, 13 Openers, and Standard Grain Agitator	13,009.00
		BOX TYPE	
1000		Plain Grain	In Base Price
1010		Combination Grain/Fertilizer	3,212.00
		OPENER TYPE	
2035		Double Disk Aluminum Boot	In Base Price
2045		Double Disk Cast Iron Boot	1,057.00
		TIRES	
3100		7.50 x 20 Farm Implement	In Base Price
3105		7.50 x 20 Double Rib	-104.00
		SPECIAL EQUIPMENT - FACTORY INSTALLED	
8003		Grass Seed Box	1,676.00
8010		Depth Gauge Press Wheel Arm Less Wheel with Footboard Extension Brackets *If Depth Gauge Press Wheel Arms are ordered, you must order a 9000 code Press Wheel option.*	660.00

ATTACHMENTS - ORDER AS DESIRED

BD1108 End Wheel Grain Drill, 7.5 In. Spacing, 13 Openers, and Standard Grain Agitator
Continued

CODE	ATTACHMENT IDENTIFIER	DESCRIPTION	SUGGESTED LIST PRICE USD ($)
		ATTACHMENTS - ORDER AS DESIRED ...Continued...	
9005		Cover Chains	68.00
9009		1 x 12 Depth Gauge Press Wheel	545.00
9010		2 x 13 Depth Gauge Press Wheel	538.00
9012		4 x 12 Double Rib Depth Gauge Press Wheel *If code 8010 Press Wheel Arms are ordered, you must order a Depth Gauge Press Wheel option from above. Press Wheel options include the necessary number of wheels for chosen machine configuration.*	903.00
9040		Double Disk Outside Scrapers, 10 Pair *Must also order conversion parts if used in combination with depth gauging press wheels.*	294.00
9050		Outside Scraper Conversion Parts, 26 Pair *Required on drill with depth gauging press wheels AND outside scrapers.*	109.00
9060		Tru-Vee Opener Attachment, One Row *For use with aluminum boot furrow openers only. Does not include opener.*	3,429.00
9200		French Operators Manual and Decals (BD11 Drills)	No Charge
		ATTACHMENTS FOR FIELD CONVERSION	
		Miscellaneous:	
	5YTBN160419	Cover Chains, Quantity 10	38.08
	5YTAN281515	Depth Gauging Press Wheel 1 x 12, Quantity 1	45.92
	5YTAN162400	Depth Gauging Press Wheel 2 x 13, Quantity 1	45.92
	5YTAN280393	Depth Gauging Press Wheel 4 x 12 Double Rib, Quantity 1	78.40
	5YTBN280000	Depth Gauging Press Wheel Arm Less Wheel, Quantity 1 *Must also order desired press wheels and footboard extension brackets.*	54.88
	5YTBN211069	Double Disk Opener Assembly with Long Aluminum Boot	223.56
	5YTBN211071	Double Disk Opener Assembly with Long Cast Iron Boot	304.56
	5YTBN211068	Double Disk Opener Assembly with Short Aluminum Boot	217.08
	5YTBN211070	Double Disk Opener Assembly with Short Cast Iron Boot	298.08
	5YTAN282365	Double Disk Outside Scrapers, 10 Pair *Must also order conversion parts if used in combination with depth gauging press wheels.*	164.64
	5YTBN210945	Footboard Extension Brackets *Order 1 for each machine to be equipped with depth gauging press wheels.*	40.32
	5YT7015199	French Operators Manual and Decals (BD11 Drills)	223.69
	5YTBN906606	Grass Seed Attachment for 13 Openers *For 13 opener, 7.5 In. spacing configuration.*	1,518.48

BD1108 End Wheel Grain Drill, 7.5 In. Spacing, 13 Openers, and Standard Grain Agitator
Continued

CODE	ATTACHMENT IDENTIFIER	DESCRIPTION	SUGGESTED LIST PRICE USD ($)
		ATTACHMENTS FOR FIELD CONVERSION ...Continued...	
	5YTAN212672	Outside Scraper Conversion Parts, 26 Pair *Required on drill with depth gauging press wheels AND outside scrapers.*	122.08
	5YTBN210047	Tru-Vee Opener Attachment, One Row *For use with aluminum boot furrow openers only. Does not include opener.*	284.04

BD1108 End Wheel Grain Drill, 7.5 In. Spacing, 13 Openers, and Standard Grain Agitator
Continued

THIS PAGE IS INTENTIONALLY LEFT BLANK

BD1110 End Wheel Grain Drill, 6 In. Spacing, 21 Openers, and Standard Grain Agitator

Equipment for Base Machine

Number of Openers: 21
Row Spacing: 6 In.
Working Width: 10 Ft. 6 In.
Transport Width: 12 Ft. 6 In.
Opener Type: 13 In. Double Disk / Staggered Pattern
Seedboot Types: Cast Aluminum or Cast Iron
Opener Downpressure: 124 lbs. Maximum
Metering: Fluted Feed
Transport Ground Clearance: 5.5 In.
Weight with Plain Box (7.5 In. Spacing): 1,600 lb.
Weight with Combo Box (7.5 In. Spacing): 1,800 lb.
Tires: 7.5-20, 4PR Rib Implement OR 7.5-20, 4PR Double-Rib Implement

Box Capacity (Plain Box): 2.8 Bushel/Ft. - 28 Bushel
Box Capacity (Combo Box): 3.4 Bushel/Ft.
40 Percent Grain: 13.5 Bushel
60 Percent Grain: 18.2 Bushel
100 Percent Grain: 27.6 Bushel
Box Capacity (Grass Seed): 1.5 Bushel
Acremeter: Standard
Assembly/Set-Up Time: 3 Man-Hours for Base Machine, 1 Additional Hour for Grass Seed Attachment
Warranty: 1 Year Parts and Labor

CODE	ATTACHMENT IDENTIFIER	DESCRIPTION	SUGGESTED LIST PRICE USD ($)
		Select One Code From Each Required Category	
		BASE MACHINE	
3002XF		BD1110 End Wheel Grain Drill, 6 In. Spacing, 21 Openers, and Standard Grain Agitator	14,159.00
		BOX TYPE	
1000		Plain Grain	In Base Price
1010		Combination Grain/Fertilizer	3,626.00
		OPENER TYPE	
2035		Double Disk Aluminum Boot	In Base Price
2045		Double Disk Cast Iron Boot	1,708.00
		TIRES	
3100		7.50 x 20 Farm Implement	In Base Price
3105		7.50 x 20 Double Rib	-104.00
		SPECIAL EQUIPMENT - FACTORY INSTALLED	
8003		Grass Seed Box	2,684.00
8010		Depth Gauge Press Wheel Arm Less Wheel with Footboard Extension Brackets *If Depth Gauge Press Wheel Arms are ordered, you must order a 9000 code Press Wheel option.*	1,045.00
		ATTACHMENTS - ORDER AS DESIRED	
9005		Cover Chains	103.00

BD1110 End Wheel Grain Drill, 6 In. Spacing, 21 Openers, and Standard Grain Agitator
Continued

CODE	ATTACHMENT IDENTIFIER	DESCRIPTION	SUGGESTED LIST PRICE USD ($)
		ATTACHMENTS - ORDER AS DESIRED ...Continued...	
9009		1 x 12 Depth Gauge Press Wheel	880.00
9010		2 x 13 Depth Gauge Press Wheel	869.00
9012		4 x 12 Double Rib Depth Gauge Press Wheel *If code 8010 Press Wheel Arms are ordered, you must order a Depth Gauge Press Wheel option from above. Press Wheel options include the necessary number of wheels for chosen machine configuration.*	1,459.00
9040		Double Disk Outside Scrapers, 10 Pair *Must also order conversion parts if used in combination with depth gauging press wheels.*	442.00
9050		Outside Scraper Conversion Parts, 26 Pair *Required on drill with depth gauging press wheels AND outside scrapers.*	109.00
9060		Tru-Vee Opener Attachment, One Row *For use with aluminum boot furrow openers only. Does not include opener.*	5,540.00
9200		French Operators Manual and Decals (BD11 Drills)	No Charge
		ATTACHMENTS FOR FIELD CONVERSION	
		Miscellaneous:	
	5YTBN160419	Cover Chains, Quantity 10	38.08
	5YTAN281515	Depth Gauging Press Wheel 1 x 12, Quantity 1	45.92
	5YTAN162400	Depth Gauging Press Wheel 2 x 13, Quantity 1	45.92
	5YTAN280393	Depth Gauging Press Wheel 4 x 12 Double Rib, Quantity 1	78.40
	5YTBN280000	Depth Gauging Press Wheel Arm Less Wheel, Quantity 1 *Must also order desired press wheels and footboard extension brackets.*	54.88
	5YTBN211069	Double Disk Opener Assembly with Long Aluminum Boot	223.56
	5YTBN211071	Double Disk Opener Assembly with Long Cast Iron Boot	304.56
	5YTBN211068	Double Disk Opener Assembly with Short Aluminum Boot	217.08
	5YTBN211070	Double Disk Opener Assembly with Short Cast Iron Boot	298.08
	5YTAN282365	Double Disk Outside Scrapers, 10 Pair *Must also order conversion parts if used in combination with depth gauging press wheels.*	164.64
	5YTBN210945	Footboard Extension Brackets *Order 1 for each machine to be equipped with depth gauging press wheels.*	40.32
	5YT7015199	French Operators Manual and Decals (BD11 Drills)	223.69
	5YTBN907037	Grass Seed Attachment for 21 Openers *For 21 opener, 6 In. spacing configuration.*	2,691.36

BD1110 End Wheel Grain Drill, 6 In. Spacing, 21 Openers, and Standard Grain Agitator
Continued

CODE	ATTACHMENT IDENTIFIER	DESCRIPTION	SUGGESTED LIST PRICE USD ($)
		ATTACHMENTS FOR FIELD CONVERSION ...Continued...	
	5YTAN212672	Outside Scraper Conversion Parts, 26 Pair *Required on drill with depth gauging press wheels AND outside scrapers.*	122.08
	5YTBN210047	Tru-Vee Opener Attachment, One Row *For use with aluminum boot furrow openers only. Does not include opener.*	284.04

BD1110 End Wheel Grain Drill, 6 In. Spacing, 21 Openers, and Standard Grain Agitator
Continued

THIS PAGE IS INTENTIONALLY LEFT BLANK

BD1110 End Wheel Grain Drill, 7.5 In. Spacing, 17 Openers, and Standard Grain Agitator

Equipment for Base Machine

Number of Openers: 17
Available Row Spacings: 7.5 In.
Working Width: 10 Ft. 7 In.
Transport Width: 12 Ft. 6 In.
Opener Type: 13 In. Double Disk / Staggered Pattern
Seedboot Types: Cast Aluminum or Cast Iron
Opener Downpressure: 124 lbs. Maximum
Metering: Fluted Feed
Transport Ground Clearance: 5.5 In.
Weight with Plain Box (7.5 In. Spacing): 1,600 lb.
Weight with Combo Box (7.5 In. Spacing): 1,800 lb.
Tires: 7.5-20, 4PR Rib Implement OR 7.5-20, 4PR Double-Rib Implement

Box Capacity (Plain Box): 2.8 Bushel/Ft. - 28 Bushel
Box Capacity (Combo Box): 3.4 Bushel/Ft.
40 Percent Grain: 13.5 Bushel
60 Percent Grain: 18.2 Bushel
100 Percent Grain: 27.6 Bushel
Box Capacity (Grass Seed): 1.5 Bushel
Acremeter: Standard
Assembly/Set-Up Time: 3 Man-Hours for Base Machine, 1 Additional Hour for Grass Seed Attachment
Warranty: 1 Year Parts and Labor

CODE	ATTACHMENT IDENTIFIER	DESCRIPTION	SUGGESTED LIST PRICE USD ($)
		Select One Code From Each Required Category	
		BASE MACHINE	
3004XF		BD1110 End Wheel Grain Drill, 7.5 In. Spacing, 17 Openers, and Standard Grain Agitator	13,969.00
		BOX TYPE	
1000		Plain Grain	In Base Price
1010		Combination Grain/Fertilizer	3,605.00
		OPENER TYPE	
2035		Double Disk Aluminum Boot	In Base Price
2045		Double Disk Cast Iron Boot	1,383.00
		TIRES	
3100		7.50 x 20 Farm Implement	In Base Price
3105		7.50 x 20 Double Rib	-104.00
		SPECIAL EQUIPMENT - FACTORY INSTALLED	
8003		Grass Seed Box	2,605.00
8010		Depth Gauge Press Wheel Arm Less Wheel with Footboard Extension Brackets *If Depth Gauge Press Wheel Arms are ordered, you must order a 9000 code Press Wheel option.*	852.00
		ATTACHMENTS - ORDER AS DESIRED	
9005		Cover Chains	68.00

BD1110 End Wheel Grain Drill, 7.5 In. Spacing, 17 Openers, and Standard Grain Agitator
Continued

CODE	ATTACHMENT IDENTIFIER	DESCRIPTION	SUGGESTED LIST PRICE USD ($)
		ATTACHMENTS - ORDER AS DESIRED ...Continued...	
9009		1 x 12 Depth Gauge Press Wheel	713.00
9010		2 x 13 Depth Gauge Press Wheel	704.00
9012		4 x 12 Double Rib Depth Gauge Press Wheel *If code 8010 Press Wheel Arms are ordered, you must order a Depth Gauge Press Wheel option from above. Press Wheel options include the necessary number of wheels for chosen machine configuration.*	1,181.00
9040		Double Disk Outside Scrapers, 10 Pair *Must also order conversion parts if used in combination with depth gauging press wheels.*	294.00
9050		Outside Scraper Conversion Parts, 26 Pair *Required on drill with depth gauging press wheels AND outside scrapers.*	109.00
9060		Tru-Vee Opener Attachment, One Row *For use with aluminum boot furrow openers only. Does not include opener.*	4,485.00
9200		French Operators Manual and Decals (BD11 Drills)	No Charge
		ATTACHMENTS FOR FIELD CONVERSION	
		Miscellaneous:	
	5YTBN160419	Cover Chains, Quantity 10	38.08
	5YTAN281515	Depth Gauging Press Wheel 1 x 12, Quantity 1	45.92
	5YTAN162400	Depth Gauging Press Wheel 2 x 13, Quantity 1	45.92
	5YTAN280393	Depth Gauging Press Wheel 4 x 12 Double Rib, Quantity 1	78.40
	5YTBN280000	Depth Gauging Press Wheel Arm Less Wheel, Quantity 1 *Must also order desired press wheels and footboard extension brackets.*	54.88
	5YTBN211069	Double Disk Opener Assembly with Long Aluminum Boot	223.56
	5YTBN211071	Double Disk Opener Assembly with Long Cast Iron Boot	304.56
	5YTBN211068	Double Disk Opener Assembly with Short Aluminum Boot	217.08
	5YTBN211070	Double Disk Opener Assembly with Short Cast Iron Boot	298.08
	5YTAN282365	Double Disk Outside Scrapers, 10 Pair *Must also order conversion parts if used in combination with depth gauging press wheels.*	164.64
	5YTBN210945	Footboard Extension Brackets *Order 1 for each machine to be equipped with depth gauging press wheels.*	40.32
	5YT7015199	French Operators Manual and Decals (BD11 Drills)	223.69
	5YTBN906607	Grass Seed Attachment for 17 Openers *For 17 opener, 7.5 In. spacing configuration.*	2,602.80

BD1110 End Wheel Grain Drill, 7.5 In. Spacing, 17 Openers, and Standard Grain Agitator
Continued

CODE	ATTACHMENT IDENTIFIER	DESCRIPTION	SUGGESTED LIST PRICE USD ($)
		ATTACHMENTS FOR FIELD CONVERSION ...Continued...	
	5YTAN212672	Outside Scraper Conversion Parts, 26 Pair *Required on drill with depth gauging press wheels AND outside scrapers.*	122.08
	5YTBN210047	Tru-Vee Opener Attachment, One Row *For use with aluminum boot furrow openers only. Does not include opener.*	284.04

THIS PAGE IS INTENTIONALLY LEFT BLANK

BD1113 End Wheel Grain Drill, 6 In. Spacing, 26 Openers, and Standard Grain Agitator

Equipment for Base Machine

Number of Openers: 26
Available Row Spacings: 6 In.
Working Width: 13 Ft.
Transport Width: 15 Ft. 1 In.
Opener Type: 13 In. Double Disk / Staggered Pattern
Seedboot Types: Cast Aluminum or Cast Iron
Opener Downpressure: 124 lbs. Maximum
Metering: Fluted Feed
Transport Ground Clearance: 5.5 In.
Weight with Plain Box (7.5 In. Spacing): 2,225 lb.
Weight with Combo Box (7.5 In. Spacing): 2,435 lb.
Tires: 7.5-20, 4PR Rib Implement OR 7.5-20, 4PR Double-Rib Implement

Box Capacity (Plain Box): 2.8 Bushel/Ft. - 36.4 Bushel
Box Capacity (Combo Box): 3.4 Bushel/Ft.
40 Percent Grain: 17.5 Bushel
60 Percent Grain: 23.6 Bushel
100 Percent Grain: 35.9 Bushel
Box Capacity (Grass Seed): 1.7 Bushel
Acremeter: Standard
Assembly/Set-Up Time: 3 Man-Hours for Base Machine, 1 Additional Hour for Grass Seed Attachment
Warranty: 1 Year Parts and Labor

CODE	ATTACHMENT IDENTIFIER	DESCRIPTION	SUGGESTED LIST PRICE USD ($)
		Select One Code From Each Required Category	
		BASE MACHINE	
3003XF		BD1113 End Wheel Grain Drill, 6 In. Spacing, 26 Openers, and Standard Grain Agitator	16,648.00
		BOX TYPE	
1000		Plain Grain	In Base Price
1010		Combination Grain/Fertilizer	3,992.00
		OPENER TYPE	
2035		Double Disk Aluminum Boot	In Base Price
2045		Double Disk Cast Iron Boot	2,115.00
		TIRES	
3100		7.50 x 20 Farm Implement	In Base Price
3105		7.50 x 20 Double Rib	-104.00
		SPECIAL EQUIPMENT - FACTORY INSTALLED	
8003		Grass Seed Box	2,768.00
8010		Depth Gauge Press Wheel Arm Less Wheel with Footboard Extension Brackets *If Depth Gauge Press Wheel Arms are ordered, you must order a 9000 code Press Wheel option.*	1,285.00
		ATTACHMENTS - ORDER AS DESIRED	
9005		Cover Chains	103.00

BD1113 End Wheel Grain Drill, 6 In. Spacing, 26 Openers, and Standard Grain Agitator
Continued

CODE	ATTACHMENT IDENTIFIER	DESCRIPTION	SUGGESTED LIST PRICE USD ($)
		ATTACHMENTS - ORDER AS DESIRED ...Continued...	
9009		1 x 12 Depth Gauge Press Wheel	1,090.00
9010		2 x 13 Depth Gauge Press Wheel	1,076.00
9012		4 x 12 Double Rib Depth Gauge Press Wheel *If code 8010 Press Wheel Arms are ordered, you must order a Depth Gauge Press Wheel option from above. Press Wheel options include the necessary number of wheels for chosen machine configuration.*	1,807.00
9040		Double Disk Outside Scrapers, 10 Pair *Must also order conversion parts if used in combination with depth gauging press wheels.*	442.00
9050		Outside Scraper Conversion Parts, 26 Pair *Required on drill with depth gauging press wheels AND outside scrapers.*	109.00
9060		Tru-Vee Opener Attachment, One Row *For use with aluminum boot furrow openers only. Does not include opener.*	6,859.00
9200		French Operators Manual and Decals (BD11 Drills)	No Charge
		ATTACHMENTS FOR FIELD CONVERSION	
		Miscellaneous:	
	5YT7015192	Agitator Field Conversion	298.08
	5YTBN160419	Cover Chains, Quantity 10	38.08
	5YTAN281515	Depth Gauging Press Wheel 1 x 12, Quantity 1	45.92
	5YTAN162400	Depth Gauging Press Wheel 2 x 13, Quantity 1	45.92
	5YTAN280393	Depth Gauging Press Wheel 4 x 12 Double Rib, Quantity 1	78.40
	5YTBN280000	Depth Gauging Press Wheel Arm Less Wheel, Quantity 1 *Must also order desired press wheels and footboard extension brackets.*	54.88
	5YTBN211069	Double Disk Opener Assembly with Long Aluminum Boot	223.56
	5YTBN211071	Double Disk Opener Assembly with Long Cast Iron Boot	304.56
	5YTBN211068	Double Disk Opener Assembly with Short Aluminum Boot	217.08
	5YTBN211070	Double Disk Opener Assembly with Short Cast Iron Boot	298.08
	5YTAN282365	Double Disk Outside Scrapers, 10 Pair *Must also order conversion parts if used in combination with depth gauging press wheels.*	164.64
	5YTBN210945	Footboard Extension Brackets *Order 1 for each machine to be equipped with depth gauging press wheels.*	40.32
	5YT7015199	French Operators Manual and Decals (BD11 Drills)	223.69

BD1113 End Wheel Grain Drill, 6 In. Spacing, 26 Openers, and Standard Grain Agitator
Continued

CODE	ATTACHMENT IDENTIFIER	DESCRIPTION	SUGGESTED LIST PRICE USD ($)
		ATTACHMENTS FOR FIELD CONVERSION ...Continued...	
	5YTBN906612	Grass Seed Attachment for 26 Openers *For 26 opener, 6 In. spacing configuration.*	2,786.40
	5YTAN212672	Outside Scraper Conversion Parts, 26 Pair *Required on drill with depth gauging press wheels AND outside scrapers.*	122.08
	5YTBN210047	Tru-Vee Opener Attachment, One Row *For use with aluminum boot furrow openers only. Does not include opener.*	284.04

BD1113 End Wheel Grain Drill, 6 In. Spacing, 26 Openers, and Standard Grain Agitator
Continued

THIS PAGE IS INTENTIONALLY LEFT BLANK

BD1113 End Wheel Grain Drill, 7.5 In. Spacing, 21 Openers, and Standard Grain Agitator

Equipment for Base Machine

Number of Openers: 21
Available Row Spacings: 7.5 In.
Working Width: 13 Ft. 1 In.
Transport Width: 15 Ft. 1 In.
Opener Type: 13 In. Double Disk / Staggered Pattern
Seedboot Types: Cast Aluminum or Cast Iron
Opener Downpressure: 124 lbs. Maximum
Metering: Fluted Feed
Transport Ground Clearance: 5.5 In.
Weight with Plain Box (7.5 In. Spacing): 2,225 lb.
Weight with Combo Box (7.5 In. Spacing): 2,435 lb.
Tires: 7.5-20, 4PR Rib Implement OR 7.5-20, 4PR Double-Rib Implement

Box Capacity (Plain Box): 2.8 Bushel/Ft. - 36.4 Bushel
Box Capacity (Combo Box): 3.4 Bushel/Ft.
40 Percent Grain: 17.5 Bushel
60 Percent Grain: 23.6 Bushel
100 Percent Grain: 35.9 Bushel
Box Capacity (Grass Seed): 1.7 Bushel
Acremeter: Standard
Assembly/Set-Up Time: 3 Man-Hours for Base Machine, 1 Additional Hour for Grass Seed Attachment
Warranty: 1 Year Parts and Labor

CODE	ATTACHMENT IDENTIFIER	DESCRIPTION	SUGGESTED LIST PRICE USD ($)
		Select One Code From Each Required Category	
		BASE MACHINE	
3005XF		BD1113 End Wheel Grain Drill, 7.5 In. Spacing, 21 Openers, and Standard Grain Agitator	15,365.00
		BOX TYPE	
1000		Plain Grain	In Base Price
1010		Combination Grain/Fertilizer	3,979.00
		OPENER TYPE	
2035		Double Disk Aluminum Boot	In Base Price
2045		Double Disk Cast Iron Boot	1,708.00
		TIRES	
3100		7.50 x 20 Farm Implement	In Base Price
3105		7.50 x 20 Double Rib	-104.00
		SPECIAL EQUIPMENT - FACTORY INSTALLED	
8003		Grass Seed Box	2,582.00
8010		Depth Gauge Press Wheel Arm Less Wheel with Footboard Extension Brackets *If Depth Gauge Press Wheel Arms are ordered, you must order a 9000 code Press Wheel option.*	1,045.00
		ATTACHMENTS - ORDER AS DESIRED	
9005		Cover Chains	103.00

BD1113 End Wheel Grain Drill, 7.5 In. Spacing, 21 Openers, and Standard Grain Agitator
Continued

CODE	ATTACHMENT IDENTIFIER	DESCRIPTION	SUGGESTED LIST PRICE USD ($)
		ATTACHMENTS - ORDER AS DESIRED ...Continued...	
9009		1 x 12 Depth Gauge Press Wheel	880.00
9010		2 x 13 Depth Gauge Press Wheel	869.00
9012		4 x 12 Double Rib Depth Gauge Press Wheel *If code 8010 Press Wheel Arms are ordered, you must order a Depth Gauge Press Wheel option from above. Press Wheel options include the necessary number of wheels for chosen machine configuration.*	1,459.00
9040		Double Disk Outside Scrapers, 10 Pair *Must also order conversion parts if used in combination with depth gauging press wheels.*	442.00
9050		Outside Scraper Conversion Parts, 26 Pair *Required on drill with depth gauging press wheels AND outside scrapers.*	109.00
9060		Tru-Vee Opener Attachment, One Row *For use with aluminum boot furrow openers only. Does not include opener.*	5,540.00
9200		French Operators Manual and Decals (BD11 Drills)	No Charge
		ATTACHMENTS FOR FIELD CONVERSION	
		Miscellaneous:	
	5YT7015192	Agitator Field Conversion	298.08
	5YTBN160419	Cover Chains, Quantity 10	38.08
	5YTAN281515	Depth Gauging Press Wheel 1 x 12, Quantity 1	45.92
	5YTAN162400	Depth Gauging Press Wheel 2 x 13, Quantity 1	45.92
	5YTAN280393	Depth Gauging Press Wheel 4 x 12 Double Rib, Quantity 1	78.40
	5YTBN280000	Depth Gauging Press Wheel Arm Less Wheel, Quantity 1 *Must also order desired press wheels and footboard extension brackets.*	54.88
	5YTBN211069	Double Disk Opener Assembly with Long Aluminum Boot	223.56
	5YTBN211071	Double Disk Opener Assembly with Long Cast Iron Boot	304.56
	5YTBN211068	Double Disk Opener Assembly with Short Aluminum Boot	217.08
	5YTBN211070	Double Disk Opener Assembly with Short Cast Iron Boot	298.08
	5YTAN282365	Double Disk Outside Scrapers, 10 Pair *Must also order conversion parts if used in combination with depth gauging press wheels.*	164.64
	5YTBN210945	Footboard Extension Brackets *Order 1 for each machine to be equipped with depth gauging press wheels.*	40.32
	5YT7015199	French Operators Manual and Decals (BD11 Drills)	223.69

BD1113 End Wheel Grain Drill, 7.5 In. Spacing, 21 Openers, and Standard Grain Agitator
Continued

CODE	ATTACHMENT IDENTIFIER	DESCRIPTION	SUGGESTED LIST PRICE USD ($)
		ATTACHMENTS FOR FIELD CONVERSION ...Continued...	
	5YTBN906611	Grass Seed Attachment for 21 Openers *For 21 opener, 7.5 In. spacing configuration.*	2,576.88
	5YTAN212672	Outside Scraper Conversion Parts, 26 Pair *Required on drill with depth gauging press wheels AND outside scrapers.*	122.08
	5YTBN210047	Tru-Vee Opener Attachment, One Row *For use with aluminum boot furrow openers only. Does not include opener.*	284.04

BD1113 End Wheel Grain Drill, 7.5 In. Spacing, 21 Openers, and Standard Grain Agitator
Continued

THIS PAGE IS INTENTIONALLY LEFT BLANK

FP2204 - 42 in. Wide 3-Point Category I Hitch Food Plot Seeder

Equipment for Base Machine

Machine Weight: 660 lbs.
Tractor Horsepower Range: 30-50 HP
Working Width: 42 In.
Unit Length: 62 In.
Unit Height: 43 In.
Number of Blades: 6
Blade Diameter: 16 In.
Blade Thickness: 3 mm
Blade Spacing: 8.25 In.
Blade Type: Notched
Bearing Hanger:
.375 In. Formed Plate with Reinforcement,
2 Each .625 U-bolts per Hanger
Bearing Type: 1 In. Square Sealed Bearing
Gang Axle: 1 In. Square
Gang Adjustment: Pinned Adjustment
Drag Width: 56 In.
CultiPacker Width: 48 In. (Optional)
Seeding Width: 45 In.
Seed Box Capacity: 45 lbs.

3 Point Hitch Type: Category I
iMatch Compatible: Yes
Number of S-Tines: 3
1.75 In. Reversible Chisel Point: 3 (Standard)
9 In. Sweep: 3 (Optional - Order Through Parts)
Right Turning Point: 1 (Optional - Order Through Parts)
Left Turning Point: 1 (Optional - Order Through Parts)
Second Toolbar with 2 S-Tines & Chisel Points: (Optional)
Rear Cultipacker Roller: (Optional)
Approximate Set-up Time: 1 Man Hour

CODE	ATTACHMENT IDENTIFIER	DESCRIPTION	SUGGESTED LIST PRICE USD ($)

Select One Code From Each Required Category

BASE MACHINE

3091XF		FP2204 - 42 in. Wide 3-Point Category I Hitch Food Plot Seeder *Rear roller not included. One S-tine toolbar standard. Rear roller and second toolbar available through attachments.*	4,152.00

ATTACHMENTS - ORDER AS DESIRED

9010		Native Grass Seed Attachment	559.00
9020		Rear Roller Attachment	464.00
9030		S-Tine Toolbar Attachment	279.00
9200		French Kit - Includes Operators Manual and Safety Decals (FP22 Series)	No Charge

ATTACHMENTS FOR FIELD CONVERSION

Miscellaneous:

	5PM50062697	French Kit - Includes Operator's Manual and Safety Decals (FP22 Series)	See Parts
	5PM50062288	Native Grass Seed Attachment	603.72
	5PM50062496	Rear Roller Attachment	501.12
	5PM50062505	S-Tine Toolbar Attachment	301.32

FP2204 - 42 in. Wide 3-Point Category I Hitch Food Plot Seeder
Continued

THIS PAGE IS INTENTIONALLY LEFT BLANK

FP2204L - 42 in. Wide 3-Point Limited Category I Hitch Food Plot Seeder

Equipment for Base Machine

Machine Weight: 550 lbs.
Tractor Horsepower Range: 20-50 HP
Working Width: 42 In.
Unit Length: 62 In.
Unit Height: 43 In.
Number of Blades: 6
Blade Diameter: 14 In.
Blade Thickness: 3 mm
Blade Spacing: 8.25 In.
Blade Type: Notched
Bearing Hanger:
"T" Hanger Bkt w/reinforcement (4 per unit)
2 U-bolts per hanger
Bearing Type: 1 In. Square Sealed Bearing
Gang Axle: 1 In. Square
Gang Adjustment: Fixed Angle
Drag Width: 45 In.
CultiPacker Width: 48 In. (Optional)
Seeding Width: 45 In.
Seed Box Capacity: 45 lbs.

3 Point Hitch Type: Category I
iMatch Compatible: Yes
Number of S-Tines: 4 Tines (only as an optional attachment)
(optional attachment) Hunter 400 Chisel plow att. Standard w 4 tines
9 In. Sweep: 3 (Optional - Order Through Parts)
Right Turning Point: 1 (Optional - Order Through Parts)
Left Turning Point: 1 (Optional - Order Through Parts)
Rear Cultipacker Roller: (Optional)
Approximate Set-up Time: .5 Man Hour

CODE	ATTACHMENT IDENTIFIER	DESCRIPTION	SUGGESTED LIST PRICE USD ($)
		Select One Code From Each Required Category	
		BASE MACHINE	
3095XF		FP2204L - 42 in. Wide 3-Point Limited Category I Hitch Food Plot Seeder *Rear roller not included. S-tine toolbar not available on this model. Rear roller available through attachments.*	2,517.00
		ATTACHMENTS - ORDER AS DESIRED	
9020		Rear Roller Attachment	262.00
		ATTACHMENTS FOR FIELD CONVERSION	
		Miscellaneous:	
	5PMJDLCA	Rear Roller Attachment	See Parts

FP2204L - 42 in. Wide 3-Point Limited Category I Hitch Food Plot Seeder
Continued

THIS PAGE IS INTENTIONALLY LEFT BLANK

FP2204P - 42 in. Wide Pull Type Food Plot Seeder

Equipment for Base Machine

Machine Weight: 730 lbs.
Single Point Hitch
Horsepower Range: 20 (500 CC)-40 HP
Working Width: 42 In.
Unit Length: 62 In.
Unit Height: 43 In.
Number of Blades: 6
Blade Diameter: 16 In.
Blade Thickness: 3 mm
Blade Spacing: 8.25 In.
Blade Type: Notched
Bearing Hanger:
.375 In. Formed Plate with Reinforcement,
2 Each .625 U-bolts per Hanger
Bearing Type: 1 In. Square Sealed Bearing
Gang Axle: 1 In. Square
Gang Adjustment: Pinned Adjustment
Drag Width: 56 In.
CultiPacker Width: 48 In. (Optional)

Seeding Width: 45 In.
Seed Box Capacity: 45 lbs.
Number of S-Tines: 3
1.75 In. Reversible Chisel Point: 3 (Standard)
9 In. Sweep: 3 (Optional - Order Through Parts)
Right Turning Point: 1 (Optional - Order Through Parts)
Left Turning Point: 1 (Optional - Order Through Parts)
Second Toolbar with 2 S-Tines & Chisel Points: (Optional)
Rear Cultipacker Roller: (Optional)
Approximate Set-up Time: 1 Man Hour

CODE	ATTACHMENT IDENTIFIER	DESCRIPTION	SUGGESTED LIST PRICE USD ($)

Select One Code From Each Required Category

BASE MACHINE

3092XF		FP2204P - 42 in. Wide Pull Type Food Plot Seeder *Includes drawbar, transport wheels, and electric jack. Rear roller not included. One S-tine toolbar standard. Rear roller available through attachments.*	5,355.00

ATTACHMENTS - ORDER AS DESIRED

9010		Native Grass Seed Attachment	559.00
9020		Rear Roller Attachment	464.00
9200		French Kit - Includes Operators Manual and Safety Decals (FP22 Series)	No Charge

ATTACHMENTS FOR FIELD CONVERSION

Miscellaneous:

	5PM50062697	French Kit - Includes Operator's Manual and Safety Decals (FP22 Series)	See Parts
	5PM50062288	Native Grass Seed Attachment	603.72
	5PM50062496	Rear Roller Attachment	501.12

FP2204P - 42 in. Wide Pull Type Food Plot Seeder
Continued

THIS PAGE IS INTENTIONALLY LEFT BLANK

FP2206 - 60 in. Wide 3-Point Category I/II Hitch Food Plot Seeder

Equipment for Base Machine

Machine Weight: 960 lbs.
Tractor Horsepower Range: 45-70 HP
Working Width: 60 In.
Unit Length: 77 In.
Unit Height: 41 In.
Number of Blades: 8
Blade Diameter: 18 In.
Blade Thickness: 3.5 mm
Blade Spacing: 7.50 In.
Blade Type: Notched
Bearing Hanger:
.375 In. Formed Plate with Reinforcement,
2 Each .625 U-bolts per Hanger
Bearing Type: 1 In. Square Sealed Bearing
Gang Axle: 1 In. Square
Gang Adjustment: Pinned Adjustment
Drag Width: 80 In.
CultiPacker Width: 72 In. (Optional)
Seeding Width: 71 In.
Seed Box Capacity: 63 lbs.

3 Point Hitch Type: Category I/II
iMatch Compatible: Yes
Number of S-Tines: 4
1.75 In. Reversible Chisel Point: 4 (Standard)
9 In. Sweep: 4 (Optional - Order Through Parts)
Right Turning Point: 2 (Optional - Order Through Parts)
Left Turning Point: 2 (Optional - Order Through Parts)
Second Toolbar with 3 S-Tines & Chisel Points: (Optional)
Rear Cultipacker Roller: (Optional)
Approximate Set-up Time: 1 Man Hour

CODE	ATTACHMENT IDENTIFIER	DESCRIPTION	SUGGESTED LIST PRICE USD ($)

Select One Code From Each Required Category

BASE MACHINE

3093XF		FP2206 - 60 in. Wide 3-Point Category I/II Hitch Food Plot Seeder *Rear roller not included. One S-tine toolbar standard. Rear roller and second toolbar available through attachments.*	5,242.00

ATTACHMENTS - ORDER AS DESIRED

9000		Grating Kit	186.00
9010		Native Grass Seed Attachment	671.00
9020		Rear Roller Attachment	675.00
9030		S-Tine Toolbar Attachment	475.00
9200		French Kit - Includes Operators Manual and Safety Decals (FP22 Series)	No Charge

ATTACHMENTS FOR FIELD CONVERSION

Miscellaneous:

	5PM50062697	French Kit - Includes Operator's Manual and Safety Decals (FP22 Series)	See Parts
	5PM50062123	Grating Kit	200.88
	5PM50062289	Native Grass Seed Attachment	724.68
	5PM50062497	Rear Roller Attachment	729.00
	5PM50062506	S-Tine Toolbar Attachment	513.00

FP2206 - 60 in. Wide 3-Point Category I/II Hitch Food Plot Seeder
Continued

THIS PAGE IS INTENTIONALLY LEFT BLANK

FP2208 - 82 in. Wide 3-Point Category I/II Hitch Food Plot Seeder

Equipment for Base Machine

Machine Weight: 1120 lbs.
Tractor Horsepower Range: 60-100 HP
Working Width: 82 In.
Unit Length: 77 In.
Unit Height: 41 In.
Number of Blades: 12
Blade Diameter: 18 In.
Blade Thickness: 3.5 mm
Blade Spacing: 7.50 In.
Blade Type: Notched
Bearing Hanger:
.375 In. Formed Plate with Reinforcement,
2 Each .625 U-bolts per Hanger
Bearing Type: 1 In. Square Sealed Bearing
Gang Axle: 1 In. Square
Gang Adjustment: Pinned Adjustment
Drag Width: 106 In.
CultiPacker Width: 96 In. (Optional)
Seeding Width: 96 In.
Seed Box Capacity: 93 lbs.

3 Point Hitch Type: Category I/II
iMatch Compatible: Yes
Number of S-Tines: 5
1.75 In. Reversible Chisel Point: 5 (Standard)
9 In. Sweep: 5 (Optional - Order Through Parts)
Right Turning Point: 2 (Optional - Order Through Parts)
Left Turning Point: 2 (Optional - Order Through Parts)
Second Toolbar with 4 S-Tines & Chisel Points: (Optional)
Rear Cultipacker Roller: (Optional)
Approximate Set-up Time: 1 Man Hour

CODE	ATTACHMENT IDENTIFIER	DESCRIPTION	SUGGESTED LIST PRICE USD ($)

Select One Code From Each Required Category

BASE MACHINE

3094XF		FP2208 - 82 in. Wide 3-Point Category I/II Hitch Food Plot Seeder *Rear roller not included. One S-tine toolbar standard. Rear roller and second toolbar available through attachments.*	6,429.00

ATTACHMENTS - ORDER AS DESIRED

9000		Grating Kit	186.00
9010		Native Grass Seed Attachment	777.00
9020		Rear Roller Attachment	765.00
9030		S-Tine Toolbar Attachment	507.00
9200		French Kit - Includes Operators Manual and Safety Decals (FP22 Series)	No Charge

ATTACHMENTS FOR FIELD CONVERSION

		Miscellaneous:	
	5PM50062697	French Kit - Includes Operator's Manual and Safety Decals (FP22 Series)	See Parts
	5PM50062123	Grating Kit	200.88
	5PM50062290	Native Grass Seed Attachment	839.16
	5PM50062498	Rear Roller Attachment	826.20
	5PM50062507	S-Tine Toolbar Attachment	547.56

FP2208 - 82 in. Wide 3-Point Category I/II Hitch Food Plot Seeder
Continued

THIS PAGE IS INTENTIONALLY LEFT BLANK

CS1360 Conservation Seeder, 5 Ft. Wide Single Large Seed Box

Equipment for Base Machine

Machine Weight: 1480 lbs. (Empty)
Tractor Horsepower: 30 HP Minimum
3 Point Hitch Type
  Category I and II
Working Width: 60 In.
Overall Width: 73 In.
Unit Length: 67 In.
Unit Height: 48 In.
Large Seed Box / Stainless Steel Box /
  Native Grass Seed Box Capacity:
  4.36 Cubic Ft. (3.50 Bushel)
Legume Seed Box Capacity:
  1.87 Cubic Ft. (1.50 Bushel)
Front Spike Roller:
  15.75 In. OD with 72 Spikes
Rear Spike Roller:
  15.75 In. OD with 114 Spikes
Rear Cultipacker Roller:
  Fiber Reinforced Nylon Rings or
  Cast Iron Rings
Roller Spikes: AR-500 Steel
Spike Roller Drive Ratio: 15:22
Seed Box Drive Ratio: 15:28 Standard
iMatch Compatible: Yes
Approximate Set-up Time: 1 Man Hour

CODE	ATTACHMENT IDENTIFIER	DESCRIPTION	SUGGESTED LIST PRICE USD ($)

Select One Code From Each Required Category

BASE MACHINE

3081XF	CS1360 Conservation Seeder, 5 Ft. Wide Single Large Seed Box	9,949.00

SMALL SEED BOX

1000	Small Seed Box *For planting legumes and other small seeds.*	In Base Price
1095	Less Small Seed Box	-1,122.00

SECONDARY BOX

2000	Stainless Steel Fertilizer Box	2,772.00
2010	Native Grass Box *Includes paddle agitator and picker wheels.*	2,052.00
2020	Second Large Seed Box	1,446.00
2095	Less Secondary Box	In Base Price

REAR CULTIPACKER TYPE

3000	Cast Iron Wheels	579.00
3010	Poly Wheels	In Base Price

ATTACHMENTS - ORDER AS DESIRED

9000	Rear Cultipacker Scraper For Cast Iron Wheels	171.00
9010	Rear Cultipacker Scraper for Nylon Wheels	171.00

ATTACHMENTS FOR FIELD CONVERSION

CS1360 Conservation Seeder, 5 Ft. Wide Single Large Seed Box

Continued

CODE	ATTACHMENT IDENTIFIER	DESCRIPTION	SUGGESTED LIST PRICE USD ($)
		ATTACHMENTS FOR FIELD CONVERSION ...Continued...	
		Miscellaneous:	
	5SBGSC012	Additional Large Seed Box with Extended Chain Guard	1,872.72
	5SBGSC014	Native Grass Seed Box with Extended Chain Guard	2,369.52
	5SBGSC006	Rear Cultipacker Scraper for Cast Iron Wheels	184.68
	5SBGSC003	Rear Cultipacker Scraper for Nylon Wheels	184.68
	5SBGSC008	Small Seed Box	1,315.44
	5SBGSC010	Stainless Steel Fertilizer Box with Extended Chain Guard	2,990.52

CS1384 Conservation Seeder, 7 Ft. Wide Single Large Seed Box

Equipment for Base Machine

Machine Weight: 2090 lbs. (Empty)
Tractor Horsepower: 50 HP Min
3 Point Hitch Type Category I and II
Working Width: 84 In.
Overall Width: 98 In.
Unit Length: 76 In.
Unit Height: 54 In.
Large Seed Box / Stainless Steel Box / Native Grass Seed Box Capacity: 10.27 Cubic Ft. (8.25 Bushel)
Legume Seed Box Capacity: 2.64 Cubic Ft. (2.12 Bushel)
Front Spike Roller: 19.75 In. OD with 132 Spikes
Rear Spike Roller: 19.75 In. OD with 150 Spikes
Rear Cultipacker Roller: Fiber Reinforced Nylon Rings or Cast Iron Rings
Roller Spikes: AR-500 Steel
Spike Roller Drive Ratio: 15:20
Seed Box Drive Ratio: 17:28 Standard
Cat II Quick Hitch Compatible: Yes
Approximate Set-up Time: 1 Man Hour

CODE	ATTACHMENT IDENTIFIER	DESCRIPTION	SUGGESTED LIST PRICE USD ($)
		Select One Code From Each Required Category	
		BASE MACHINE	
3082XF		CS1384 Conservation Seeder, 7 Ft. Wide Single Large Seed Box	14,127.00
		SMALL SEED BOX	
1000		Small Seed Box *For planting legumes and other small seeds.*	In Base Price
1095		Less Small Seed Box	-1,303.00
		SECONDARY BOX	
2000		Stainless Steel Fertilizer Box	3,054.00
2010		Native Grass Box *Includes paddle agitator and picker wheels.*	2,692.00
2020		Second Large Seed Box	1,722.00
2095		Less Secondary Box	In Base Price
		REAR CULTIPACKER TYPE	
3000		Cast Iron Wheels	764.00
3010		Poly Wheels	In Base Price
		ATTACHMENTS - ORDER AS DESIRED	
9000		Rear Cultipacker Scraper For Cast Iron Wheels	241.00
9010		Rear Cultipacker Scraper for Nylon Wheels	241.00
		ATTACHMENTS FOR FIELD CONVERSION	

CS1384 Conservation Seeder, 7 Ft. Wide Single Large Seed Box

Continued

CODE	ATTACHMENT IDENTIFIER	DESCRIPTION	SUGGESTED LIST PRICE USD ($)
		ATTACHMENTS FOR FIELD CONVERSION ...Continued...	
		Miscellaneous:	
	5SBGSC013	Additional Large Seed Box with Extended Chain Guard	2,477.52
	5SBGSC015	Native Grass Seed Box with Extended Chain Guard	3,240.00
	5SBGSC007	Rear Cultipacker Scraper for Cast Iron Wheels	260.28
	5SBGSC005	Rear Cultipacker Scraper for Nylon Wheels	260.28
	5SBGSC009	Small Seed Box	1,621.08
	5SBGSC011	Stainless Steel Fertilizer Box with Extended Chain Guard	3,857.76

TR2058 - 58 In. PTO Driven Overseeder

Equipment for Base Machine

Working Width: 58 In.
Shipping Weight: 1188 lbs.
Rotor RPM: 231 RPM
PTO RPM: 540 RPM
PTO HP: 25 to 50 HP
Operational Weight: 998 lbs.
Number Of Flanges: 18
Number Of Blades: 52
Hopper Capacity: 5.3 Cubic Ft.
Category I 3-Point Hitch
Assembly/Set-Up Time:
30 Minutes (Approximate)
Overall Width: 66 In.

Tilling Rotor Complete with C-Blades:
Optional (7 In. depth)
Rear Roller Scraper: Optional
Gauge Wheels: Optional
Front Roller: Optional
Note: Gauge Wheels and Front Roller
Can Not be Used Together

CODE	ATTACHMENT IDENTIFIER	DESCRIPTION	SUGGESTED LIST PRICE USD ($)

Select One Code From Each Required Category

BASE MACHINE

3041XF		TR2058 - 58 In. PTO Driven Overseeder	8,941.00

ATTACHMENTS ORDER AS DESIRED

9000		Front Roller *Can not be used in conjunction with Gauge Wheels.*	616.00
9010		Gauge Wheels *Can not be used in conjunction with Front Roller.*	366.00
9020		Rear Roller Scraper	229.00
9030		Tilling Roller *Includes C-Blades.*	517.00

ATTACHMENTS FOR FIELD CONVERSION

		Miscellaneous:	
	5BP0099516	Front Roller	616.40
	5BP0099875	Gauge Wheels	366.58
	5BP0099539	Rear Roller Scraper	229.09
	5BP0099517	Tilling Rotor *Includes C-Blades*	517.58

TR2058 - 58 In. PTO Driven Overseeder
Continued

THIS PAGE IS INTENTIONALLY LEFT BLANK

HP2025 - Hydraulic Power Unit, 25 HP - U.S.

Equipment for Base Machine

Function: Hydraulic Power Unit
Pressure: 2700 psi
Flow: 16 gpm
Reservoir Capacity: 15 gal.
System Capacity: 17 gal.
System Features: Pressure relieve valve, filter, temperature and oil level gauge, and thermal protection switch
Hoses, Tips, and Brackets included
Tractor RPM: 540 RPM
PTO Manufacturer: Comer
Parking Stand: Standard
Hitch Category: Category I
Quick Hitch Compatibility:
iMatch Compatible
Approximate Set-Up Time: 120 Minutes

CODE	ATTACHMENT IDENTIFIER	DESCRIPTION	SUGGESTED LIST PRICE USD ($)
		Select One Code From Each Required Category	
		BASE MACHINE	
1601XF		HP2025 - Hydraulic Power Unit, 25 HP - U.S. *Must be used with SB2164 Snowblower and SW2160 Rotary Broom. Can be used with SW2172 Rotary Broom and BL2130 Debris Blower. Includes wiring harness to control the loader mounted implement.*	6,304.00
		OIL COOLER	
2000		Oil Cooler for HP2025 and HP2134 Hydraulic Power Units *Includes high efficiency oil cooler, electric fan, bolted support, hoses, fittings and installation instructions. Recommended for application generating high heat.*	In Base Price
2095		Less Oil Cooler	-1,660.00
		ATTACHMENTS - ORDER AS DESIRED	
		Wiring Harness:	
9040		Additional Wiring Harness for HP2025 and HP2134 Hydraulic Power Units for Open Operator Station Tractors *Includes complete wiring harness from battery to switch in the console.*	92.00
		ATTACHMENTS FOR FIELD CONVERSION	
		Miscellaneous:	
	5RDF0038	Additional Wiring Harness for HP2025 and HP2134 Hydraulic Power Units for Open Operator Station Tractors *Includes complete wiring harness from battery to switch in the console.*	100.04
	5RDF0036	Oil Cooler for HP2025 and HP2134 Hydraulic Power Units *Includes high efficiency oil cooler, electric fan, bolted support, hoses, fittings and installation instructions. Recommended for application generating high heat.*	1,816.59
	5RDF0039	Wiring Harness for HP2025 and HP2134 Hydraulic Power Units to control Loader Mounted Attachment *Includes complete wiring harness from switch in the console to 3 cavities connectors for front implements.*	88.55

HP2025 - Hydraulic Power Unit, 25 HP - U.S.
Continued

THIS PAGE IS INTENTIONALLY LEFT BLANK

HP2134 - Hydraulic Power Unit, 34 HP - U.S.

Equipment for Base Machine

Function: Hydraulic Power Unit
Pressure: 2700 psi
Flow: 16 gpm
Reservoir Capacity: 15 gal.
System Capacity: 17 gal.
System Features: Pressure relieve valve, filter, temperature and oil level gauge, and thermal protection switch
Hoses, Tips, and Brackets included
Tractor RPM: 540 RPM
PTO Manufacturer: Comer

Parking Stand: Standard
Hitch Category: Category I
Quick Hitch Compatibility:
iMatch Compatible
Approximate Set-Up Time: 120 Minutes

CODE	ATTACHMENT IDENTIFIER	DESCRIPTION	SUGGESTED LIST PRICE USD ($)
		Select One Code From Each Required Category	
		BASE MACHINE	
1611XF		HP2134 - Hydraulic Power Unit, 34 HP - U.S. *Must be used with SB2176 Snowblower and SW2184 Rotary Broom. Can be used with SW2172 Rotary Broom and BL2130 Debris Blower. Includes wiring harness to control the loader mounted implement.*	6,412.00
		OIL COOLER	
2000		Oil Cooler for HP2025 and HP2134 Hydraulic Power Units *Includes high efficiency oil cooler, electric fan, bolted support, hoses, fittings and installation instructions. Recommended for application generating high heat.*	In Base Price
2095		Less Oil Cooler	-1,660.00
		ATTACHMENTS - ORDER AS DESIRED	
		Wiring Harness:	
9040		Additional Wiring Harness for HP2025 and HP2134 Hydraulic Power Units for Open Operator Station Tractors *Includes complete wiring harness from battery to switch in the console.*	92.00
		ATTACHMENTS FOR FIELD CONVERSION	
		Miscellaneous:	
	5RDF0038	Additional Wiring Harness for HP2025 and HP2134 Hydraulic Power Units for Open Operator Station Tractors *Includes complete wiring harness from battery to switch in the console.*	100.04
	5RDF0037	Hydraulic Power Unit Cooler Upgrade (HP2134) *Includes complete cooling unit and thermal by-pass manifold. Bolted support for manifold, hoses, fittings, wiring harness and installation instructions. Only for first year power units sold together with a SB2176. Recommended for application generating high heat.*	2,505.58
	5RDF0036	Oil Cooler for HP2025 and HP2134 Hydraulic Power Units *Includes high efficiency oil cooler, electric fan, bolted support, hoses, fittings and installation instructions. Recommended for application generating high heat.*	1,816.59

HP2134 - Hydraulic Power Unit, 34 HP - U.S.

Continued

CODE	ATTACHMENT IDENTIFIER	DESCRIPTION	SUGGESTED LIST PRICE USD ($)
		ATTACHMENTS FOR FIELD CONVERSION ...Continued...	
	5RDF0039	Wiring Harness for HP2025 and HP2134 Hydraulic Power Units to control Loader Mounted Attachment *Includes complete wiring harness from switch in the console to 3 cavities connectors for front implements.*	88.55

HP2025 - Hydraulic Power Unit, 25 HP - Canada

Equipment for Base Machine

Function: Hydraulic Power Unit
Pressure: 2700 psi
Flow: 16 gpm
Reservoir Capacity: 15 gal.
System Capacity: 17 gal.
System Features: Pressure relieve valve, filter, temperature and oil level gauge, and thermal protection switch
Hoses, Tips, and Brackets included
Tractor RPM: 540 RPM
PTO Manufacturer: Comer
Parking Stand: Standard
Hitch Category: Category I
Quick Hitch Compatibility:
iMatch Compatible
Approximate Set-Up Time: 120 Minutes

CODE	ATTACHMENT IDENTIFIER	DESCRIPTION	SUGGESTED LIST PRICE USD ($)
		Select One Code From Each Required Category	
		BASE MACHINE	
160AXF		HP2025 - Hydraulic Power Unit, 25 HP - Canada *Must be used with SB2164 Snowblower and SW2160 Rotary Broom. Can be used with SW2172 Rotary Broom and BL2130 Debris Blower. Includes wiring harness to control the loader mounted implement.*	6,400.00
		OIL COOLER	
2000		Oil Cooler for HP2025 and HP2134 Hydraulic Power Units *Includes high efficiency oil cooler, electric fan, bolted support, hoses, fittings and installation instructions. Recommended for application generating high heat.*	In Base Price
2095		Less Oil Cooler	-1,685.28
		ATTACHMENTS - ORDER AS DESIRED	
		Wiring Harness:	
9040		Additional Wiring Harness for HP2025 and HP2134 Hydraulic Power Units for Open Operator Station Tractors *Includes complete wiring harness from battery to switch in the console.*	93.40
		ATTACHMENTS FOR FIELD CONVERSION	
		Miscellaneous:	
	5RDF0038	Additional Wiring Harness for HP2025 and HP2134 Hydraulic Power Units for Open Operator Station Tractors *Includes complete wiring harness from battery to switch in the console.*	100.04
	5RDF0036	Oil Cooler for HP2025 and HP2134 Hydraulic Power Units *Includes high efficiency oil cooler, electric fan, bolted support, hoses, fittings and installation instructions. Recommended for application generating high heat.*	1,816.59
	5RDF0039	Wiring Harness for HP2025 and HP2134 Hydraulic Power Units to control Loader Mounted Attachment *Includes complete wiring harness from switch in the console to 3 cavities connectors for front implements.*	88.55

HP2025 - Hydraulic Power Unit, 25 HP - Canada
Continued

THIS PAGE IS INTENTIONALLY LEFT BLANK

HP2134 - Hydraulic Power Unit, 34 HP - Canada

Equipment for Base Machine

Function: Hydraulic Power Unit
Pressure: 2700 psi
Flow: 16 gpm
Reservoir Capacity: 15 gal.
System Capacity: 17 gal.
System Features: Pressure relieve valve, filter, temperature and oil level gauge, and thermal protection switch
Hoses, Tips, and Brackets included
Tractor RPM: 540 RPM
PTO Manufacturer: Comer

Parking Stand: Standard
Hitch Category: Category I
Quick Hitch Compatibility:
iMatch Compatible
Approximate Set-Up Time: 120 Minutes

CODE	ATTACHMENT IDENTIFIER	DESCRIPTION	SUGGESTED LIST PRICE USD ($)
		Select One Code From Each Required Category	
		BASE MACHINE	
161AXF		HP2134 - Hydraulic Power Unit, 34 HP - Canada *Must be used with SB2176 Snowblower and SW2184 Rotary Broom. Can be used with SW2172 Rotary Broom and BL2130 Debris Blower. Includes wiring harness to control the loader mounted implement.*	6,509.64
		OIL COOLER	
2000		Oil Cooler for HP2025 and HP2134 Hydraulic Power Units *Includes high efficiency oil cooler, electric fan, bolted support, hoses, fittings and installation instructions. Recommended for application generating high heat.*	In Base Price
2095		Less Oil Cooler	-1,685.28
		ATTACHMENTS - ORDER AS DESIRED	
		Wiring Harness:	
9040		Additional Wiring Harness for HP2025 and HP2134 Hydraulic Power Units for Open Operator Station Tractors *Includes complete wiring harness from battery to switch in the console.*	93.40
		ATTACHMENTS FOR FIELD CONVERSION	
		Miscellaneous:	
	5RDF0038	Additional Wiring Harness for HP2025 and HP2134 Hydraulic Power Units for Open Operator Station Tractors *Includes complete wiring harness from battery to switch in the console.*	100.04
	5RDF0037	Hydraulic Power Unit Cooler Upgrade (HP2134) *Includes complete cooling unit and thermal by-pass manifold. Bolted support for manifold, hoses, fittings, wiring harness and installation instructions. Only for first year power units sold together with a SB2176. Recommended for application generating high heat.*	2,505.58
	5RDF0036	Oil Cooler for HP2025 and HP2134 Hydraulic Power Units *Includes high efficiency oil cooler, electric fan, bolted support, hoses, fittings and installation instructions. Recommended for application generating high heat.*	1,816.59

HP2134 - Hydraulic Power Unit, 34 HP - Canada
Continued

CODE	ATTACHMENT IDENTIFIER	DESCRIPTION	SUGGESTED LIST PRICE USD ($)
		ATTACHMENTS FOR FIELD CONVERSION ...Continued...	
	5RDF0039	Wiring Harness for HP2025 and HP2134 Hydraulic Power Units to control Loader Mounted Attachment *Includes complete wiring harness from switch in the console to 3 cavities connectors for front implements.*	88.55

AS10H - 6 Ft. Standard Duty Snow Push with Fixed Edge fits Current 300 and 400 Series Carrier

Equipment for Base Machine

```
Cutting Width: 73.75 In.
Loader Series:
  300 and 400 Only (Not 500 Series)
Dimensions:
  W74.5 In. x H30.75 In. x D34 In.
Capacity:
  3.5 Cubic Foot
Operational Weight: 440 lbs.
```

```
Shipping Weight: 490 lbs.
```

CODE	ATTACHMENT IDENTIFIER	DESCRIPTION	SUGGESTED LIST PRICE USD ($)
		Select One Code From Each Required Category	
		BASE MACHINE	
2191XF		AS10H - 6 Ft. Standard Duty Snow Push with Fixed Edge fits Current 300 and 400 Series Carrier *Fixed cutting edge is rubber.* *Note: Reference Frontier Loader Attachment Compatibility Chart for specific loader compatibility.*	1,994.00
		ATTACHMENTS - ORDER AS DESIRED	
9200		French Operator's Manual and Decal Kit for AS10, AS11 Series Snow Push	No Charge
		ATTACHMENTS FOR FIELD CONVERSION	
		Miscellaneous:	
	5MP43052	French Operator's Manual and Decal Kit for Models: AB15, AB16, AE11, AF11, AF12, AG10, AH11, AS10, AS11	138.79

AS10H - 6 Ft. Standard Duty Snow Push with Fixed Edge fits Current 300 and 400 Series Carrier

Continued

THIS PAGE IS INTENTIONALLY LEFT BLANK

AS10H - 7 Ft. Standard Duty Snow Push with Fixed Edge fits Current 300 and 400 Series Carrier

Equipment for Base Machine

Cutting Width: 85.75 In.
Loader Series:
  300 and 400 Only (Not 500 Series)
Dimensions:
  W86.25 In. x H30.75 In. x D34 In.
Capacity:
  4 Cubic Foot
Operational Weight: 477 lbs.

Shipping Weight: 527 lbs.

CODE	ATTACHMENT IDENTIFIER	DESCRIPTION	SUGGESTED LIST PRICE USD ($)
		Select One Code From Each Required Category	
		BASE MACHINE	
2192XF		AS10H - 7 Ft. Standard Duty Snow Push with Fixed Edge fits Current 300 and 400 Series Carrier *Fixed cutting edge is rubber.* *Note: Reference Frontier Loader Attachment Compatibility Chart for specific loader compatibility.*	2,213.00
		ATTACHMENTS - ORDER AS DESIRED	
9200		French Operator's Manual and Decal Kit for AS10, AS11 Series Snow Push	No Charge
		ATTACHMENTS FOR FIELD CONVERSION	
		Miscellaneous:	
	5MP43052	French Operator's Manual and Decal Kit for Models: AB15, AB16, AE11, AF11, AF12, AG10, AH11, AS10, AS11	138.79

AS10H - 7 Ft. Standard Duty Snow Push with Fixed Edge fits Current 300 and 400 Series Carrier

Continued

THIS PAGE IS INTENTIONALLY LEFT BLANK

AS10H - 8 Ft. Standard Duty Snow Push with Fixed Edge fits Current 300 and 400 Series Carrier

Equipment for Base Machine

```
Cutting Width: 97.75 In.
Loader Series:
  300 and 400 Only (Not 500 Series)
Dimensions:
  W98.25 In. x H30.75 In. x D34 In.
Capacity:
  4.5 Cubic Foot
Operational Weight: 514 lbs.
```

```
Shipping Weight: 564 lbs.
```

CODE	ATTACHMENT IDENTIFIER	DESCRIPTION	SUGGESTED LIST PRICE USD ($)
		Select One Code From Each Required Category	
		BASE MACHINE	
2193XF		AS10H - 8 Ft. Standard Duty Snow Push with Fixed Edge fits Current 300 and 400 Series Carrier *Fixed cutting edge is rubber.* *Note: Reference Frontier Loader Attachment Compatibility Chart for specific loader compatibility.*	2,444.00
		ATTACHMENTS - ORDER AS DESIRED	
9200		French Operator's Manual and Decal Kit for AS10, AS11 Series Snow Push	No Charge
		ATTACHMENTS FOR FIELD CONVERSION	
		Miscellaneous:	
	5MP43052	French Operator's Manual and Decal Kit for Models: AB15, AB16, AE11, AF11, AF12, AG10, AH11, AS10, AS11	138.79

AS10H - 8 Ft. Standard Duty Snow Push with Fixed Edge fits Current 300 and 400 Series Carrier

Continued

THIS PAGE IS INTENTIONALLY LEFT BLANK

AS11E - 8 Ft. Medium Duty Snow Push with Trip Edge fits Current 300, 400, and 500 Series Carrier

Equipment for Base Machine

```
Cutting Width: 98 In.
Loader Series:
  300, 400, and 500
Dimensions:
  W98.38 In. x H39.8 In. x D41.5 In.
Capacity:
  7 Cubic Foot
Optional Bolt-on Pull Back Kit Weight:
  163 lbs.
```

```
Operational Weight: 900 lbs.
Shipping Weight: 950 lbs.
```

CODE	ATTACHMENT IDENTIFIER	DESCRIPTION	SUGGESTED LIST PRICE USD ($)

Select One Code From Each Required Category

BASE MACHINE

2201XF		AS11E - 8 Ft. Medium Duty Snow Push with Trip Edge fits Current 300, 400, and 500 Series Carrier *Note: Reference Frontier Loader Attachment Compatibility Chart for specific loader compatibility.*	3,579.00

ATTACHMENTS - ORDER AS DESIRED

9000		Back Drag Attachment for 8 Ft. AS11E (Less Rubber Edge)	721.00
9010		Rubber Edge Kit for 8 Ft. AS11E *8 Ft. Back Drag attachment required.*	385.00
9200		French Operator's Manual and Decal Kit for AS10, AS11 Series Snow Push	No Charge

ATTACHMENTS FOR FIELD CONVERSION

		Miscellaneous:	
	5FP10730	Back Drag Attachment for 8 Ft. AS11E (Less Rubber Edge)	See Parts
	5MP43052	French Operator's Manual and Decal Kit for Models: AB15, AB16, AE11, AF11, AF12, AG10, AH11, AS10, AS11	138.79
	5FP10733	Rubber Edge Kit for 8 Ft. AS11E *5FP10730 - 8 Ft. Back Drag attachment required.*	416.61

AS11E - 8 Ft. Medium Duty Snow Push with Trip Edge fits Current 300, 400, and 500 Series Carrier

Continued

THIS PAGE IS INTENTIONALLY LEFT BLANK

AS11E - 9 Ft. Medium Duty Snow Push with Trip Edge fits Current 300, 400, and 500 Series Carrier

Equipment for Base Machine

```
Cutting Width: 110 In.
Loader Series:
  300, 400, and 500
Dimensions:
  W110.38 In. x H39.8 In. x D41.5 In.
Capacity:
  7.8 Cubic Foot
Optional Bolt-on Pull Back Kit Weight:
  175 lbs.
```

```
Operational Weight: 943 lbs.
Shipping Weight: 993 lbs.
```

CODE	ATTACHMENT IDENTIFIER	DESCRIPTION	SUGGESTED LIST PRICE USD ($)

Select One Code From Each Required Category

BASE MACHINE

2202XF		AS11E - 9 Ft. Medium Duty Snow Push with Trip Edge fits Current 300, 400, and 500 Series Carrier *Note: Reference Frontier Loader Attachment Compatibility Chart for specific loader compatibility.*	3,935.00

ATTACHMENTS - ORDER AS DESIRED

9000		Back Drag Attachment for 9 Ft. AS11E (Less Rubber Edge)	749.00
9010		Rubber Edge Kit for 9 Ft. AS11E *9 Ft. Back Drag attachment required.*	437.00
9200		French Operator's Manual and Decal Kit for AS10, AS11 Series Snow Push	No Charge

ATTACHMENTS FOR FIELD CONVERSION

		Miscellaneous:	
	5FP10731	Back Drag Attachment for 9 Ft. AS11E (Less Rubber Edge)	See Parts
	5MP43052	French Operator's Manual and Decal Kit for Models: AB15, AB16, AE11, AF11, AF12, AG10, AH11, AS10, AS11	138.79
	5FP10734	Rubber Edge Kit for 9 Ft. AS11E *5FP10731 - 9 Ft. Back Drag attachment required.*	See Parts

AS11E - 9 Ft. Medium Duty Snow Push with Trip Edge fits Current 300, 400, and 500 Series Carrier

Continued

THIS PAGE IS INTENTIONALLY LEFT BLANK

AS11E - 10 Ft. Medium Duty Snow Push with Trip Edge fits Current 300, 400, and 500 Series Carrier

Equipment for Base Machine

```
Cutting Width: 119.5 In.
Loader Series:
  300, 400, and 500
Dimensions:
  W110.875 In. x H39.8 In. x D41.5 In.
Capacity:
  8.5 Cubic Foot
Optional Bolt-on Pull Back Kit Weight:
  185 lbs.
```

```
Operational Weight: 980 lbs.
Shipping Weight: 1030 lbs.
```

CODE	ATTACHMENT IDENTIFIER	DESCRIPTION	SUGGESTED LIST PRICE USD ($)

Select One Code From Each Required Category

BASE MACHINE

2203XF		AS11E - 10 Ft. Medium Duty Snow Push with Trip Edge fits Current 300, 400, and 500 Series Carrier *Note: Reference Frontier Loader Attachment Compatibility Chart for specific loader compatibility.*	4,284.00

ATTACHMENTS - ORDER AS DESIRED

9000		Back Drag Attachment for 10 Ft. AS11E (Less Rubber Edge)	785.00
9010		Rubber Edge Kit for 10 Ft. AS11E *10 Ft. Back Drag attachment required.*	477.00
9200		French Operator's Manual and Decal Kit for AS10, AS11 Series Snow Push	No Charge

ATTACHMENTS FOR FIELD CONVERSION

		Miscellaneous:	
	5FP10732	Back Drag Attachment for 10 Ft. AS11E (Less Rubber Edge)	See Parts
	5MP43052	French Operator's Manual and Decal Kit for Models: AB15, AB16, AE11, AF11, AF12, AG10, AH11, AS10, AS11	138.79
	5FP10735	Rubber Edge Kit for 10 Ft. AS11E *5FP10732 - 10 Ft. Back Drag attachment required.*	See Parts

AS11E - 10 Ft. Medium Duty Snow Push with Trip Edge fits Current 300, 400, and 500 Series Carrier

Continued

THIS PAGE IS INTENTIONALLY LEFT BLANK

SB1148 - 48 In. 3-Point Medium Snowblower - U.S.

Equipment for Base Machine

Function: Snow Removal
Working Width: 48 In.
Transport Width: 48.5 In.
Working Height: 24 5/8 In.
Length: 38.5 In.
Single/Dual Auger: Single
Auger Diameter: 15 In.
Auger Flighting Thickness: 1/4 In.
Impeller Diameter: 20 In.
Impeller Width: 6 In.
Impeller Shaft Diameter: 1 In.
Number of Impeller Blades: 4
Roller Chain: 50
Drive Sprocket: 17 Teeth
Driven Sprocket: 36 Teeth
Chain Idler: Manual Adjustment
Gear Box Manufacturer: Comer
Gear Box Description: Model L-25J
Gear Box HP (Through Gears): 11
Gear Box HP (Straight Through): 30
Tractor RPM: 540 RPM
Impeller RPM: 540 RPM
Auger RPM: 170 RPM
PTO Manufacturer: Comer
PTO Description: 20
PTO Clutch Setting (Number): 900
Shearbolt Bolt Size and Grade (PTO):
M6 8.8 Metric
Shearbolt Bolt Size and Grade (Auger):
1/4 In. 5 SAE
Skid Shoe: Adjustable
Skid Shoe Material: Steel
End Plate Thickness: 3/16 In.
Back Plate Thickness: 12 Gauge
Impeller Housing Thickness: 12 Gauge
Impeller Blade Thickness: 3/16 In.
Side Panel Bottom Thickness: 3/16 In.

Cutting Edge: Welded
Cutting Edge Dimension: 3/8 In. x 2 In.
Chute Diameter: 8 In.
Chute Base: Standard
Chute Rotation: 215 Degrees
Parking Stand: Standard
Hitch Category: Category I
Quick Hitch Compatibility:
iMatch Compatible
HP Requirements (Minimum-Maximum HP):
16-35 HP
Operating Weight: 375 lbs.
Shipping Weight: 415 lbs.
Approximate Set-up Time: 60 Minutes
Chute Deflector Adjustment (Standard):
Manual
Chute Deflector Adjustment Options:
Hydraulic Cylinder (2 In. x 5 In.)
Including Brackets, Hoses, and Tips
Electric Actuator (5 In.)
Including Hardware, Switch, and Electric Cable
Chute Rotation (Standard): Must Choose
an Option, Manual or Hydraulic
Chute Rotation Options:
Manual, Worm Gear with Crank
Hydraulic: Motor,
Including Flow Restrictors, Hoses, and Tips
Chute: Two Part ONLY
Dual Auger: N/A
Rotating Drum (Including Hoses and Tips):
N/A

CODE	ATTACHMENT IDENTIFIER	DESCRIPTION	SUGGESTED LIST PRICE USD ($)
		Select One Code From Each Required Category	
		BASE MACHINE	
3801XF		SB1148 - 48 In. 3-Point Medium Snowblower - U.S.	2,448.97
		CHUTES	
1000		Manual Chute Rotation Kit	In Base Price
1010		Hydraulic Cylinder Kit for Chute Rotation	330.00
		ATTACHMENTS - ORDER AS DESIRED	
9000		Hydraulic Cylinder Kit for Chute Deflector	283.00
9010		Electric Kit for Chute Deflector *Includes 5 In. actuator.*	820.01
		ATTACHMENTS FOR FIELD CONVERSION	

SB1148 - 48 In. 3-Point Medium Snowblower - U.S.
Continued

CODE	ATTACHMENT IDENTIFIER	DESCRIPTION	SUGGESTED LIST PRICE USD ($)
		ATTACHMENTS FOR FIELD CONVERSION ...Continued...	
		Miscellaneous:	
	5RDF0049A	Electric Kit for Chute Deflector - Includes 5 In. Actuator *For snowblowers with serial number 1XFSB11XB0111288 and above.*	859.82
	5RDF0019	Hydraulic Cylinder Kit for Chute Deflector *For snowblowers with serial number 1XFSB11XB0111287 and below.*	262.15
	5RDF0048A	Hydraulic Cylinder Kit for Chute Deflector *For snowblowers with serial number 1XFSB11XB0111288 and above.*	296.74
	5RDF0017	Hydraulic Cylinder Kit for Chute Rotation *For snowblowers with serial number 1XFSB11XB0111287 and below.*	466.92
	5RDF0047	Hydraulic Cylinder Kit for Chute Rotation *For snowblowers with serial number 1XFSB11XB0111288 and above.*	496.92
	5RDF0016	Manual Chute Rotation Kit (SB11) *For snowblowers with serial number 1XFSB11XB0111287 and below.*	148.93
	5RDF0046	Manual Chute Rotation Kit (SB11) *For snowblowers with serial number 1XFSB11XB0111288 and above.*	150.57

SB1154 - 54 In. 3-Point Medium Snowblower - U.S.

Equipment for Base Machine

Function: Snow Removal
Working Width: 54 In.
Transport Width: 54.5 In.
Working Height: 26 In.
Length: 41 In.
Single/Dual Auger: Single
Auger Diameter: 15 In.
Auger Flighting Thickness: 5/16 In.
Impeller Diameter: 24 In.
Impeller Width: 7 In.
Impeller Shaft Diameter: 1-3/8 In.
Number of Impeller Blades: 4
Roller Chain: 60
Drive Sprocket: 10 Teeth
Driven Sprocket: 32 Teeth
Chain Idler: Manual Adjustment
Gear Box Manufacturer: Comer
Gear Box Description: Model T-281A
Gear Box HP (Through Gears): 23 HP
Gear Box HP (Straight Through): 60 HP
Tractor RPM: 540 RPM
Impeller RPM: 540 RPM
Auger RPM: 170 RPM
PTO Manufacturer: Comer
PTO Description: 40
PTO Clutch Setting (Number): 1300
Shearbolt Bolt Size and Grade (PTO):
M10 8.8 Metric
Shearbolt Bolt Size and Grade (Auger):
5/16 In. 5 SAE
Skid Shoe: Adjustable
Skid Shoe Material: Steel
End Plate Thickness: 3/16 In.
Back Plate Thickness: 12 Gauge
Impeller Housing Thickness: 12 Gauge
Impeller Blade Thickness: 3/16 In.
Side Panel Bottom Thickness: 3/16 In.
Cutting Edge: Welded
Cutting Edge Dimension: 3/8 In. x 2 In.
Chute Diameter: 8 In.
Chute Base: Standard
Chute Rotation: 215 Degrees
Parking Stand: Standard
Hitch Category: Category I
Quick Hitch Compatibility:
iMatch Compatible
HP Requirements (Minimum-Maximum HP):
16-35 HP
Operating Weight: 455 lbs.
Shipping Weight: 495 lbs.
Approximate Set-up Time: 60 Minutes
Chute Deflector Adjustment (Standard):
Manual
Chute Deflector Adjustment Options:
Hydraulic Cylinder (2 In. x 5 In.)
Including Brackets, Hoses, and Tips
Electric Actuator (5 In.)
Including Hardware, Switch, and Electric Cable
Chute Rotation (Standard): Must Choose an
Option - Manual or Hydraulic
Chute Rotation Options:
Manual, Worm Gear with Crank
Hydraulic: Motor
Including Flow Restrictors, Hoses, and Tips
Chute: Two Part ONLY
Dual Auger: MN/A
Rotating Drum (Including Hoses and Tips):
N/A

CODE	ATTACHMENT IDENTIFIER	DESCRIPTION	SUGGESTED LIST PRICE USD ($)
		Select One Code From Each Required Category	
		BASE MACHINE	
3802XF		SB1154 - 54 In. 3-Point Medium Snowblower - U.S.	2,721.00
		CHUTES	
1000		Manual Chute Rotation Kit	In Base Price
1010		Hydraulic Cylinder Kit for Chute Rotation	330.00
		ATTACHMENTS - ORDER AS DESIRED	
9000		Hydraulic Cylinder Kit for Chute Deflector	283.00
9010		Electric Kit for Chute Deflector *Includes 5 In. actuator.*	820.01
		ATTACHMENTS FOR FIELD CONVERSION	

SB1154 - 54 In. 3-Point Medium Snowblower - U.S.
Continued

CODE	ATTACHMENT IDENTIFIER	DESCRIPTION	SUGGESTED LIST PRICE USD ($)
		ATTACHMENTS FOR FIELD CONVERSION ...Continued...	
		Miscellaneous:	
	5RDF0020	Electric Kit for Chute Deflector - Includes 4 In. Actuator *For snowblowers with serial number 1XFSB11XAB0111287 and below.*	869.29
	5RDF0049A	Electric Kit for Chute Deflector - Includes 5 In. Actuator *For snowblowers with serial number 1XFSB11XB0111288 and above.*	859.82
	5RDF0019	Hydraulic Cylinder Kit for Chute Deflector *For snowblowers with serial number 1XFSB11XB0111287 and below.*	262.15
	5RDF0048A	Hydraulic Cylinder Kit for Chute Deflector *For snowblowers with serial number 1XFSB11XB0111288 and above.*	296.74
	5RDF0017	Hydraulic Cylinder Kit for Chute Rotation *For snowblowers with serial number 1XFSB11XB0111287 and below.*	466.92
	5RDF0047	Hydraulic Cylinder Kit for Chute Rotation *For snowblowers with serial number 1XFSB11XB0111288 and above.*	496.92
	5RDF0016	Manual Chute Rotation Kit (SB11) *For snowblowers with serial number 1XFSB11XB0111287 and below.*	148.93
	5RDF0046	Manual Chute Rotation Kit (SB11) *For snowblowers with serial number 1XFSB11XB0111288 and above.*	150.57

SB1164 - 64 In. 3-Point Medium Snowblower - U.S.

Equipment for Base Machine

Function: Snow Removal
Working Width: 64 In.
Transport Width: 64.5 In.
Working Height: 26 In.
Length: 41 In.
Single/Dual Auger: Single
Auger Diameter: 15 In.
Auger Flighting Thickness: 5/16 In.
Impeller Diameter: 24 In.
Impeller Width: 7 In.
Impeller Shaft Diameter: 1-3/8 In.
Number of Impeller Blades: 4
Roller Chain: 60
Drive Sprocket: 10 Teeth
Driven Sprocket: 32 Teeth
Chain Idler: Manual Adjustment
Gear Box Manufacturer: Comer
Gear Box Description: Model T-281A
Gear Box HP (Through Gears): 23 HP
Gear Box HP (Straight Through): 60 HP
Tractor RPM: 540 RPM
Impeller RPM: 540 RPM
Auger RPM: 170 RPM
PTO Manufacturer: Comer
PTO Description: 40
PTO Clutch Setting (Number): 1300
Shearbolt Bolt Size and Grade (PTO):
M10 8.8 Metric
Shearbolt Bolt Size and Grade (Auger):
5/16 In. 5 SAE
Skid Shoe: Adjustable
Skid Shoe Material: Steel
End Plate Thickness: 3/16 In.
Back Plate Thickness: 12 Gauge
Impeller Housing Thickness: 12 Gauge
Impeller Blade Thickness: 3/16 In.
Side Panel Bottom Thickness: 3/16 In.
Cutting Edge: Welded
Cutting Edge Dimension: 3/8 In. x 2 In.
Chute Diameter: 8 In.
Chute Base: Standard
Chute Rotation: 215 Degrees
Parking Stand: Standard
Hitch Category: Category I
Quick Hitch Compatibility:
iMatch Compatible
HP Requirements (Minimum-Maximum HP):
20-50 HP
Operating Weight: 479 lbs.
Shipping Weight: 519 lbs.
Approximate Set-Up Time: 60 Minutes
Chute Deflector Adjustment (Standard):
Manual
Chute Deflector Adjustment Options:
Hydraulic Cylinder (2 In. x 5 In.)
Including Brackets, Hoses, and Tips
Electric Actuator (5 In.)
Including Hardware, Switch, and Electric Cable
Chute Rotation (Standard): Must Choose an
Option - Manual or Hydraulic
Chute Rotation Options:
Manual, Worm Gear with Crank
Hydraulic: Motor
Including Flow Restrictors, Hoses, and Tips
Chute: Two Part ONLY
Dual Auger: N/A
Rotating Drum (Including Hoses and Tips):
N/A

CODE	ATTACHMENT IDENTIFIER	DESCRIPTION	SUGGESTED LIST PRICE USD ($)

Select One Code From Each Required Category

BASE MACHINE

3803XF	SB1164 - 64 In. 3-Point Medium Snowblower - U.S.	2,803.00

CHUTES

1000	Manual Chute Rotation Kit	In Base Price
1010	Hydraulic Cylinder Kit for Chute Rotation	330.00

ATTACHMENTS - ORDER AS DESIRED

9000	Hydraulic Cylinder Kit for Chute Deflector	283.00
9010	Electric Kit for Chute Deflector *Includes 5 In. actuator.*	820.01

ATTACHMENTS FOR FIELD CONVERSION

SB1164 - 64 In. 3-Point Medium Snowblower - U.S.
Continued

CODE	ATTACHMENT IDENTIFIER	DESCRIPTION	SUGGESTED LIST PRICE USD ($)
		ATTACHMENTS FOR FIELD CONVERSION ...Continued...	
		Miscellaneous:	
	5RDF0020	Electric Kit for Chute Deflector - Includes 4 In. Actuator *For snowblowers with serial number 1XFSB11XAB0111287 and below.*	869.29
	5RDF0049A	Electric Kit for Chute Deflector - Includes 5 In. Actuator *For snowblowers with serial number 1XFSB11XB0111288 and above.*	859.82
	5RDF0019	Hydraulic Cylinder Kit for Chute Deflector *For snowblowers with serial number 1XFSB11XB0111287 and below.*	262.15
	5RDF0048A	Hydraulic Cylinder Kit for Chute Deflector *For snowblowers with serial number 1XFSB11XB0111288 and above.*	296.74
	5RDF0017	Hydraulic Cylinder Kit for Chute Rotation *For snowblowers with serial number 1XFSB11XB0111287 and below.*	466.92
	5RDF0047	Hydraulic Cylinder Kit for Chute Rotation *For snowblowers with serial number 1XFSB11XB0111288 and above.*	496.92
	5RDF0016	Manual Chute Rotation Kit (SB11) *For snowblowers with serial number 1XFSB11XB0111287 and below.*	148.93
	5RDF0046	Manual Chute Rotation Kit (SB11) *For snowblowers with serial number 1XFSB11XB0111288 and above.*	150.57

SB1174 - 74 In. 3-Point Medium Snowblower - U.S.

Equipment for Base Machine

Function: Snow Removal
Working Width: 74 In.
Transport Width: 74.5 In.
Working Height: 26 In.
Length: 47.5 In.
Single/Dual Auger: Single
Auger Diameter: 15 In.
Auger Flighting Thickness: 5/16 In.
Impeller Diameter: 24 In.
Impeller Width: 9 In.
Impeller Shaft Diameter: 1-3/8 In.
Number of Impeller Blades: 4
Roller Chain: 60
Drive Sprocket: 10 Teeth
Driven Sprocket: 32 Teeth
Chain Idler: Manual Adjustment
Gear Box Manufacturer: Comer
Gear Box Description: Model T-281A
Gear Box HP (Through Gears): 23 HP
Gear Box HP (Straight Through): 60 HP
Tractor RPM: 540 RPM
Impeller RPM: 540 RPM
Auger RPM: 170 RPM
PTO Manufacturer: Comer
PTO Description: 50
PTO Clutch Setting (Number): 1700
Shearbolt Bolt Size and Grade (PTO):
M10 8.8 Metric
Shearbolt Bolt Size and Grade (Auger):
5/16 In. 5 SAE
Skid Shoe: Adjustable
Skid Shoe Material: Steel
End Plate Thickness: 3/16 In.
Back Plate Thickness: 11 Gauge
Impeller Housing Thickness: 11 Gauge
Impeller Blade Thickness: 1/4 In.
Side Panel Bottom Thickness: 3/16 In.
Cutting Edge: Welded
Cutting Edge Dimension: 3/8 In. x 2 In.
Chute Diameter: 12 In.
Chute Base: Standard
Chute Rotation: 215 Degrees
Parking Stand: Standard
Hitch Category: Category I
Quick Hitch Compatibility:
iMatch Compatible
HP Requirements (Minimum-Maximum HP):
20-50 HP
Operating Weight: 590 lbs.
Shipping Weight: 635 lbs.
Approximate Set-Up Time: 60 Minutes
Chute Deflector Adjustment (Standard):
Manual
Chute Deflector Adjustment Options:
Hydraulic Cylinder (2 In. x 5 In.)
Including Brackets, Hoses and Tips
Electric Actuator (8 In.)
Including Hardware, Switch, and Electric Cable
Chute Rotation (Standard): Must Choose an
Option - Manual or Hydraulic
Manual, Worm Gear with Crank
Hydraulic: Motor
Including Flow Restrictor, Hoses, and Tips
Chute: Two Part ONLY
Dual Auger: N/A
Rotating Drum (Including Hoses and Tips):
N/A

CODE	ATTACHMENT IDENTIFIER	DESCRIPTION	SUGGESTED LIST PRICE USD ($)

Select One Code From Each Required Category

BASE MACHINE

3804XF	SB1174 - 74 In. 3-Point Medium Snowblower - U.S.	3,531.00

CHUTES

1000	Manual Chute Rotation Kit	In Base Price
1010	Hydraulic Cylinder Kit for Chute Rotation	330.00

ATTACHMENTS - ORDER AS DESIRED

9000	Hydraulic Cylinder Kit for Chute Deflector	283.00
9010	Electric Kit for Chute Deflector *Includes 8 In. actuator.*	820.01

ATTACHMENTS FOR FIELD CONVERSION

SB1174 - 74 In. 3-Point Medium Snowblower - U.S.
Continued

CODE	ATTACHMENT IDENTIFIER	DESCRIPTION	SUGGESTED LIST PRICE USD ($)
		ATTACHMENTS FOR FIELD CONVERSION ...Continued...	
		Miscellaneous:	
	5RDF0021	Electric Kit for Chute Deflector - Includes 8 In. Actuator	859.82
	5RDF0009	Hydraulic Cylinder Kit for Chute Deflector *For snowblowers with serial number 1XFSB11XB0111287 and below.*	314.56
	5RDF0048A	Hydraulic Cylinder Kit for Chute Deflector *For snowblowers with serial number 1XFSB11XB0111288 and above.*	296.74
	5RDF0018	Hydraulic Cylinder Kit for Chute Rotation *For snowblowers with serial number 1XFSB11XB0111287 and below.*	553.89
	5RDF0047	Hydraulic Cylinder Kit for Chute Rotation *For snowblowers with serial number 1XFSB11XB0111288 and above.*	496.92
	5RDF0016	Manual Chute Rotation Kit (SB11) *For snowblowers with serial number 1XFSB11XB0111287 and below.*	148.93
	5RDF0046	Manual Chute Rotation Kit (SB11) *For snowblowers with serial number 1XFSB11XB0111288 and above.*	150.57

SB1184 - 84 In. 3-Point Medium Snowblower - U.S.

Equipment for Base Machine

Function: Snow Removal
Working Width: 84 In.
Transport Width: 85.5 In.
Working Height: 34 In.
Length: 55.5 In.
Single/Dual Auger: Single
Auger Diameter: 20 In.
Auger Flighting Thickness: 3/8 In.
Impeller Diameter: 27-1/2 In.
Impeller Width: 10.5 In.
Impeller Shaft Diameter: 1-9/16 In.
Number of Impeller Blades: 4
Roller Chain: 60
Drive Sprocket: 12 Teeth
Driven Sprocket: 38 Teeth
Chain Idler: Manual Adjustment
Gear Box Manufacturer: Comer
Gear Box Description: Model T-27D
Gear Box HP (Through Gears): 55 HP
Gear Box HP (Straight Through): 105 HP
Tractor RPM: 540 RPM
Impeller RPM: 540 RPM
Auger RPM: 170 RPM
PTO Manufacturer: Comer
PTO Description: 60
PTO Clutch Setting (Number): 1900
Shearbolt Bolt Size and Grade (PTO):
M10 6.8 Metric
Shearbolt Bolt Size and Grade (Auger):
5/16 In. 5 SAE
Skid Shoe: Adjustable
Skid Shoe Material: Steel
End Plate Thickness: 3/16 In.
Back Plate Thickness: 11 Gauge
Impeller Housing Thickness: 11 Gauge
Impeller Blade Thickness: 3/8 In.
Side Panel Bottom Thickness: 3/16 In.
Cutting Edge: Welded
Cutting Edge Dimension: 1/2 In. x 3 In.
Chute Diameter: 12 In.
Chute Base: Standard
Chute Rotation: 215 Degrees
Parking Stand: Standard
Hitch Category: Category I/II
Quick Hitch Compatibility:
iMatch Compatible and
Quick Coupler Compatible
HP Requirements (Minimum-Maximum HP):
35-90 HP
Operating Weight: 958 lbs.
Shipping Weight: 1003 lbs.
Approximate Set-Up Time: 60 Minutes
Chute Deflector Adjustment (Standard):
Manual
Chute Deflector Adjustment Options:
Hydraulic Cylinder (2 In. x 8 In.)
Including Hoses and Tips
Electric Actuator (8 In.)
Including Hardware, Switch, and Electric Cable
Chute Rotation (Standard): Must choose an
Option - Manual or Hydraulic
Chute Rotation Options:
Manual, Worm Gear with Crank
Hydraulic: Cylinder (2 In. x 8 In.),
Including Bracket, Hoses, and Tips
Chute: Two Part ONLY
Dual Auger: N/A
Rotating Drum (Including Hoses and Tips):
N/A

CODE	ATTACHMENT IDENTIFIER	DESCRIPTION	SUGGESTED LIST PRICE USD ($)

Select One Code From Each Required Category

BASE MACHINE

3805XF	SB1184 - 84 In. 3-Point Medium Snowblower - U.S.	4,880.14

CHUTES

1000	Manual Chute Rotation Kit	In Base Price
1010	Hydraulic Cylinder Kit for Chute Rotation	439.86

ATTACHMENTS - ORDER AS DESIRED

9000	Hydraulic Cylinder Kit for Chute Deflector	300.00
9010	Electric Kit for Chute Deflector *Includes 8 In. actuator.*	820.01

ATTACHMENTS FOR FIELD CONVERSION

SB1184 - 84 In. 3-Point Medium Snowblower - U.S.
Continued

CODE	ATTACHMENT IDENTIFIER	DESCRIPTION	SUGGESTED LIST PRICE USD ($)
		ATTACHMENTS FOR FIELD CONVERSION ...Continued...	
		Miscellaneous:	
	5RDF0021	Electric Kit for Chute Deflector - Includes 8 In. Actuator	859.82
	5RDF0009	Hydraulic Cylinder Kit for Chute Deflector	314.56
	5RDF0018	Hydraulic Cylinder Kit for Chute Rotation	553.89
	5RDF0016	Manual Chute Rotation Kit (SB11)	148.93

SB1194 - 94 In. 3-Point Medium Snowblower - U.S.

Equipment for Base Machine

Function: Snow Removal
Working Width: 94 In. (2,387.6 mm)
Transport Width: 95.5 In. (2,425.7 mm)
Working Height: 34 In. (863.6 mm)
Length: 55.5 In. (1,409.7 mm)
Single/Dual Auger: Single
Auger Diameter: 20 In. (508 mm)
Auger Flighting Thickness: 3/8 In. (9.5 mm)
Impeller Diameter: 27-1/2 In. (698.5 mm)
Impeller Width: 10.5 In. (266.7 mm)
Impeller Shaft Diameter: 1-9/16 In. (39.7 mm)
Number of Impeller Blades: 4
Roller Chain: 60
Drive Sprocket: 10 Teeth
Driven Sprocket: 32 Teeth
Chain Idler: Manual Adjustment
Gear Box Manufacturer: Comer
Gear Box Description: Model T-27D
Gear Box HP (Through Gears): 55 HP (41 kW)
Gear Box HP (Straight Through): 105 HP (78.3 kW)
Tractor RPM: 540 RPM
Impeller RPM: 540 RPM
Auger RPM: 170 RPM
PTO Manufacturer: Comer
PTO Description: 60
PTO Clutch Setting (Number): 1900 N-m
Shearbolt Bolt Size and Grade (PTO):
M10 6.8 Metric
Shearbolt Bolt Size and Grade (Auger):
5/16 In. 5 SAE
Skid Shoe: Adjustable
Skid Shoe Material: Steel
End Plate Thickness: 3/16 In. (4.8 mm)
Back Plate Thickness: 11 Gauge (3.18 mm)
Impeller Housing Thickness: 11 Gauge (3.18 mm)
Impeller Blade Thickness: 3/8 In. (9.5 mm)
Side Panel Bottom Thickness: 3/16 In. (4.8 mm)
Cutting Edge: Welded
Cutting Edge Dimension: 1/2 In. x 3 In. (12.7 x 76.2 mm)
Chute Diameter: 12 In. (304.8 mm)
Chute Base: Standard
Chute Rotation: 215 Degrees
Parking Stand: Standard
Hitch Category: Category II
Quick Hitch Compatibility:
Quick Coupler Compatible
HP Requirements (Minimum-Maximum HP):
35-90 HP (26.1 kW - 67.1 kW)
Operating Weight: 1,121 lbs. (508.5 kg)
Shipping Weight: 1,166 lbs. (528.9 kg)
Approximate Set-Up Time: 60 Minutes
Chute Deflector Adjustment (Standard):
Manual
Chute Deflector Adjustment Options:
Hydraulic Cylinder (2 In. x 8 In.)
Including Hoses and Tips
Electric Actuator (8 In.)
Including Hardware, Switch, and Electric Cable
Chute Rotation (Standard): Must choose an
Option - Manual or Hydraulic
Chute Rotation Options:
Manual, Worm Gear with Crank
Hydraulic: Cylinder (2 In. x 8 In.),
Including Bracket, Hoses, and Tips
Chute: Two Part ONLY
Dual Auger: N/A
Rotating Drum (Including Hoses and Tips):
N/A

CODE	ATTACHMENT IDENTIFIER	DESCRIPTION	SUGGESTED LIST PRICE USD ($)

Select One Code From Each Required Category

BASE MACHINE

3806XF	SB1194 - 94 In. 3-Point Medium Snowblower - U.S.	5,063.14

CHUTES

1000	Manual Chute Rotation Kit	In Base Price
1010	Hydraulic Cylinder Kit for Chute Rotation	439.86

ATTACHMENTS - ORDER AS DESIRED

9000	Hydraulic Cylinder Kit for Chute Deflector	300.00
9010	Electric Kit for Chute Deflector *Includes 8 In. actuator.*	820.01

ATTACHMENTS FOR FIELD CONVERSION

SB1194 - 94 In. 3-Point Medium Snowblower - U.S.
Continued

CODE	ATTACHMENT IDENTIFIER	DESCRIPTION	SUGGESTED LIST PRICE USD ($)
		ATTACHMENTS FOR FIELD CONVERSION ...Continued...	
		Miscellaneous:	
	5RDF0021	Electric Kit for Chute Deflector - Includes 8 In. Actuator	859.82
	5RDF0009	Hydraulic Cylinder Kit for Chute Deflector	314.56
	5RDF0018	Hydraulic Cylinder Kit for Chute Rotation	553.89
	5RDF0016	Manual Chute Rotation Kit (SB11)	148.93

SB1274 - 74 In. 3-Point Commercial Snowblower with Hydraulic Motor Chute Rotation and Single Auger - U.S.

Equipment for Base Machine

Function: Snow Removal
Working Width: 74 In. (1,879.6 mm)
Transport Width: 74.5 In. (1892.3 mm)
Working Height: 30 In. (762 mm)
Single/Dual Auger: Single
Auger Diameter: 20 In. (508 mm)
Auger Flighting Thickness: 3/8 In. (9.53 mm)
Impeller Diameter: 26 In. (660.4 mm)
Impeller Width: 10.5 In. (266.7 mm)
Impeller Shaft Diameter: 1 9/16 In. (39.69 mm)
Number of Impeller Blades: 4
Roller Chain: 60
Drive Sprocket: 10 Teeth
Driven Sprocket: 32 Teeth
Chain Idler: Automatic Adjustment
Gear Box Manufacturer: Comer
Gear Box Description: Model T-27D
Gear Box HP (Through Gears): 55 HP (41 kW)
Gear Box HP (Straight Through): 105 HP (78.3 kW)
Tractor RPM: 540 RPM
Impeller RPM: 540 RPM
Auger RPM: 170 RPM
PTO Manufacturer: Comer
PTO Description: 50
PTO Clutch Setting: 1,700 Nm (1,253.9 lbf-ft)
Shearbolt Bolt Size and Grade (PTO):
M10 8.8 Metric
Shearbolt Bolt Size and Grade (Auger):
5/16 In. 5 SAE
Skid Shoe: Adjustable
Skid Shoe Material: Steel
End Plate Thickness: 3/16 In. (4.8mm)
Back Plate Thickness: 11 Gauge
Impeller Housing Thickness: 3/16 In. (4.8mm)
Impeller Blade Thickness: 5/16 In. (7.9mm)
Side Panel Bottom Thickness: 1/2 In. (12.7 mm)
Cutting Edge: Replacable
Cutting Edge Dimension: 1/2 In. x 3 In. (12.7mm x 76.2 mm)
Chute Diameter: 10.5 In. (266.7 mm)
Chute Base: Standard
Chute Rotation: 270 Degrees
Parking Stand: Standard
Hitch Category: Category I & II
Quick Hitch Compatibility:
iMatch & Cat. II Quick Coupler Compatible
HP Requirements (Minimum-Maximum HP):
30-80 HP (22.4-59.7kW)
Operating Weight: 835 lbs. (378.7 kg)
Shipping Weight: 875 lbs. (396.9 kg)
Approximate Set-up Time: 60 Minutes
Chute Deflector Adjustment (Standard): Hydraulic Cylinder
Chute Rotation (Standard): Hydraulic Motor
Chute: Three Part ONLY w/ 2" x 4" cylinder, hoses, and tips
Rotating Drum (Including Hoses and Tips):
N/A

CODE	ATTACHMENT IDENTIFIER	DESCRIPTION	SUGGESTED LIST PRICE USD ($)

Select One Code From Each Required Category

BASE MACHINE

3831XF		SB1274 - 74 In. 3-Point Commercial Snowblower with Hydraulic Motor Chute Rotation and Single Auger - U.S. *Includes 2" x 4" cylinder, hoses, and tips for chute deflection.*	6,828.00

ATTACHMENTS FOR FIELD CONVERSION

		Miscellaneous:	
	5RDF0028	Cutting Edge - CHT400 Steel	289.18

SB1274 - 74 In. 3-Point Commercial Snowblower with Hydraulic Motor Chute Rotation and Single Auger - U.S.

Continued

THIS PAGE IS INTENTIONALLY LEFT BLANK

SB1280 - 80 In. 3-Point Commercial Snowblower with Hydraulic Motor Chute Rotation and Single Auger - U.S.

Equipment for Base Machine

Function: Snow Removal
Working Width: 80 In. (2,032 mm)
Transport Width: 80.5 In. (2,044.7 mm)
Working Height: 30 In. (762 mm)
Single/Dual Auger: Single
Auger Diameter: 20 In. (508 mm)
Auger Flighting Thickness: 3/8 In. (9.53 mm)
Impeller Diameter: 26 In. (660.4 mm)
Impeller Width: 10.5 In. (266.7 mm)
Impeller Shaft Diameter: 1 9/16 In. (39.69 mm)
Number of Impeller Blades: 4
Roller Chain: 60
Drive Sprocket: 10 Teeth
Driven Sprocket: 32 Teeth
Chain Idler: Automatic Adjustment
Gear Box Manufacturer: Comer
Gear Box Description: Model T-27D
Gear Box HP (Through Gears): 55 HP (41 kW)
Gear Box HP (Straight Through): 105 HP (78.3 kW)
Tractor RPM: 540 RPM
Impeller RPM: 540 RPM
Auger RPM: 170 RPM
PTO Manufacturer: Comer
PTO Description: 50
PTO Clutch Setting: 1,700 Nm (1,253.9 lbf-ft)
Shearbolt Bolt Size and Grade (PTO):
M10 8.8 Metric
Shearbolt Bolt Size and Grade (Auger):
5/16 In. 5 SAE
Skid Shoe: Adjustable
Skid Shoe Material: Steel
End Plate Thickness: 3/16 In. (4.8mm)
Back Plate Thickness: 11 Gauge
Impeller Housing Thickness: 3/16 In. (4.8mm)
Impeller Blade Thickness: 5/16 In. (7.9mm)
Side Panel Bottom Thickness: 1/2 In. (12.7 mm)
Cutting Edge: Replacable
Cutting Edge Dimension: 1/2 In. x 3 In. (12.7mm x 76.2 mm)
Chute Diameter: 10.5 In. (266.7 mm)
Chute Base: Standard
Chute Rotation: 270 Degrees
Parking Stand: Standard
Hitch Category: Category I & II
Quick Hitch Compatibility:
iMatch & Cat. II Quick Coupler Compatible
HP Requirements (Minimum-Maximum HP):
30-80 HP (22.4-59.7kW)
Operating Weight: 895 lbs. (406 kg)
Shipping Weight: 935 lbs. (424.1 kg)
Approximate Set-up Time: 60 Minutes
Chute Deflector Adjustment (Standard): Hydraulic Cylinder
Chute Rotation (Standard): Hydraulic Motor
Chute: Three Part ONLY w/ 2" x 4" cylinder, hoses, and tips
Rotating Drum (Including Hoses and Tips):
N/A

CODE	ATTACHMENT IDENTIFIER	DESCRIPTION	SUGGESTED LIST PRICE USD ($)

Select One Code From Each Required Category

BASE MACHINE

3832XF		SB1280 - 80 In. 3-Point Commercial Snowblower with Hydraulic Motor Chute Rotation and Single Auger - U.S. *Includes 2" x 4" cylinder, hoses, and tips for chute deflection.*	7,029.00

ATTACHMENTS FOR FIELD CONVERSION

		Miscellaneous:	
	5RDF0029	Cutting Edge - CHT400 Steel	318.28

SB1280 - 80 In. 3-Point Commercial Snowblower with Hydraulic Motor Chute Rotation and Single Auger - U.S.

Continued

THIS PAGE IS INTENTIONALLY LEFT BLANK

SB1308R - 8 Ft. 3-Point Commercial Rotating Drum Snowblower with Hydraulic Motor Chute Rotation and Single Auger - U.S.

Equipment for Base Machine

Function: Snow Removal
Working Width: 98 In.
Transport Width: 99 In.
Working Height: 44 In.
Length: 67 In.
Single/Dual Auger: Single/Dual
Auger Diameter: 24 In.
Auger Flighting Thickness: 7/16 In.
Impeller Diameter: 31-1/2 In.
Impeller Width: 14 In.
Impeller Shaft Diameter: 2 In.
Number of Impeller Blades: 6
Roller Chain: 80
Drive Sprocket: 12 Teeth
Driven Sprocket: 34 Teeth
Chain Idler: Automatic Adjustment
Gear Box Manufacturer: Comer
Gear Box Description: Model T-279A
Gear Box HP (Through Gears): 100 HP
Gear Box HP (Straight Through): 185 HP
Tractor RPM: 540/1000 RPM Optional
Impeller RPM: 540 RPM
Auger RPM: 190 RPM
PTO Manufacturer: Comer
PTO Description: 80
PTO Clutch Setting (Number): 3000
Shearbolt Bolt Size and Grade (PTO):
  M10 6.8 Metric
Shearbolt Bolt Size and Grade (Auger):
  5/16 In. 5 SAE
Skid Shoe: Adjustable
Skid Shoe Material: Steel
End Plate Thickness: 5/16 In.
Back Plate Thickness: 10 Gauge
Impeller Housing Thickness: 3/16 In.
Impeller Blade Thickness: 1/2 In.
Side Panel Bottom Thickness: 5/8 In.
Cutting Edge: Bolt-on/Reversible
Cutting Edge Dimension: 1/2 In. x 4 In.
Chute Diameter: 14-7/8 In.
Chute Base: Heavy Duty
Chute Rotation: 270 Degrees
Parking Stand: Standard
Hitch Category: Category II/III
Quick Hitch Compatibility:
  Quick Hitch Compatible
HP Requirements (Minimum-Maximum HP):
  90-180 HP
Operating Weight: 2233 lbs.
Shipping Weight: 2280 lbs.
Approximate Set-Up Time: 100 Minutes
Chute Deflector Adjustment (Standard):
  Manual - Must Choose a Chute Option
Chute Deflector Adjustment Options:
  Hydraulic Cylinder (2 In. x 8 In.)
  Including Hoses and Tips
Chute Rotation (Standard):
  Hydraulic Motor Chute Rotation
  Including Hoses and Tips
Chute Rotation Options: N/A
Chute:
  Two Part, Includes Manual Deflector
  Three Part, Includes Cylinder
    (2 In. x 8 In.), Hoses, and Tips
Dual Auger: 15 In. Diameter Auger
Rotating Drum (Including Hoses and Tips):
  Standard

CODE	ATTACHMENT IDENTIFIER	DESCRIPTION	SUGGESTED LIST PRICE USD ($)
		Select One Code From Each Required Category	
		BASE MACHINE	
3812XF		SB1308R - 8 Ft. 3-Point Commercial Rotating Drum Snowblower with Hydraulic Motor Chute Rotation and Single Auger - U.S.	12,109.57
		CHUTES	
1000		2 Part Chute *Includes manual deflector.*	In Base Price
1010		3 Part Chute *Includes cylinders, hoses, and tips.*	557.00
		ATTACHMENTS - ORDER AS DESIRED	
9000		Cutting Edge - CHT400 Steel	271.13
9010		2nd Auger Kit *15 In. diameter.*	1,074.14

SB1308R - 8 Ft. 3-Point Commercial Rotating Drum Snowblower with Hydraulic Motor Chute Rotation and Single Auger - U.S.

Continued

CODE	ATTACHMENT IDENTIFIER	DESCRIPTION	SUGGESTED LIST PRICE USD ($)
		ATTACHMENTS - ORDER AS DESIRED ...Continued...	
9020		Drift Cutters	348.58
9030		Hydraulic Cylinder Kit for Chute Deflector	300.00
9040		Reducer 1000 to 540 RPM for 13 Series Snowblowers, Models (SB1392, SB1308, SB1309) *Bundle Number 5RDF0023 is needed to complete kit.*	3,078.44
9050		Quick Disconnect Yoke Series 08, 1-3/4 In., 20 Splines for Series 13 Snowblowers, Models (SB1392, SB1308, SB1309) *Bundle Number 5RDF0022 is needed to complete kit.*	255.14
		ATTACHMENTS FOR FIELD CONVERSION	
		Miscellaneous:	
	5RDF0007	2nd Auger Kit - 15 In. Diameter	1,126.28
	5RDF0003	Cutting Edge - CHT400 Steel	226.83
	5RDF0015	Drift Cutters	468.45
	5RDF0009	Hydraulic Cylinder Kit for Chute Deflector	314.56
	5RDF0023	Quick disconnect Yoke series 08, 1-3/4", 20 splines for series 13 snowblowers, models (SB1392, SB1308, and SB1309) *Bundle Number 5RDF0022 is needed to complete kit.*	267.52
	5RDF0022	Reducer 1000 to 540 RPM for 13 series snowblowers, models (SB1392, SB1308, and SB1309) *Bundle Number 5RDF0023 is needed to complete kit.*	3,227.88

SB1308 - 8 Ft. 3-Point Commercial Snowblower with Hydraulic Motor Chute Rotation and Single Auger - U.S.

Equipment for Base Machine

Function: Snow Removal
Working Width: 98 In.
Transport Width: 99 In.
Working Height: 44 In.
Length: 65.5 In.
Single/Dual Auger: Single/Dual
Auger Diameter: 24 In.
Auger Flighting Thickness: 7/16 In.
Impeller Diameter: 31-1/2 In.
Impeller Width: 14 In.
Impeller Shaft Diameter: 2 In.
Number of Impeller Blades: 6
Roller Chain: 80
Drive Sprocket: 12 Teeth
Driven Sprocket: 34 Teeth
Chain Idler: Automatic Adjustment
Gear Box Manufacturer: Comer
Gear Box Description: Model T-279A
Gear Box HP (Through Gears): 100 HP
Gear Box HP (Straight Through): 185 HP
Tractor RPM: 540/1000 RPM Optional
Impeller RPM: 540 RPM
Auger RPM: 190 RPM
PTO Manufacturer: Comer
PTO Description: 80
PTO Clutch Setting (Number): 3000
Shearbolt Bolt Size and Grade (PTO):
  M10 6.8 Metric
Shearbolt Bolt Size and Grade (Auger):
  5/16 In. 5 SAE
Skid Shoe: Adjustable
Skid Shoe Material: Steel
End Plate Thickness: 5/16 In.
Back Plate Thickness: 10 Gauge
Impeller Housing Thickness: 1/4 In.
Impeller Blade Thickness: 1/2 In.
Side Panel Bottom Thickness: 3/4 In.
Cutting Edge: Bolt-on/Reversible
Cutting Edge Dimension: 1/2 In. x 5 In.
Chute Diameter: 14-7/8 In.
Chute Base: Heavy Duty
Chute Rotation: 270 Degrees
Parking Stand: Standard
Hitch Category: Category II/III
Quick Hitch Compatibility:
  Quick Hitch Compatible
HP Requirements (Minimum-Maximum HP):
  90-180 HP
Operating Weight: 2160 lbs.
Shipping Weight: 2205 lbs.
Approximate Set-Up Time: 100 Minutes
Chute Deflector Adjustment (Standard):
  Manual - Must Choose a Chute Option
Chute Deflector Adjustment Options:
  Hydraulic Cylinder (2 In. x 8 In.)
  Including Hoses and Tips
Chute Rotation (Standard):
  Hydraulic Motor Chute Rotation
  Including Hoses and Tips
Chute Rotation Options: N/A
Chute:
  Two Part, Includes Manual Deflector
  Three Part, Includes Cylinder
    (2 In. x 8 In.), Hoses and Tips
Dual Auger: 15 In. Diameter Auger
Rotating Drum (Including Hoses and Tips):
  N/A

CODE	ATTACHMENT IDENTIFIER	DESCRIPTION	SUGGESTED LIST PRICE USD ($)

Select One Code From Each Required Category

BASE MACHINE

3811XF	SB1308 - 8 Ft. 3-Point Commercial Snowblower with Hydraulic Motor Chute Rotation and Single Auger - U.S.	10,426.08

CHUTES

1000	2 Part Chute *Includes manual deflector.*	In Base Price
1010	3 Part Chute *Includes cylinders, hoses, and tips.*	557.00

ATTACHMENTS - ORDER AS DESIRED

9000	Cutting Edge - CHT400 Steel	271.13
9010	2nd Auger Kit *15 In. diameter.*	1,074.14

SB1308 - 8 Ft. 3-Point Commercial Snowblower with Hydraulic Motor Chute Rotation and Single Auger - U.S.

Continued

CODE	ATTACHMENT IDENTIFIER	DESCRIPTION	SUGGESTED LIST PRICE USD ($)
		ATTACHMENTS - ORDER AS DESIRED ...Continued...	
9020		Drift Cutters	348.58
9030		Hydraulic Cylinder Kit for Chute Deflector	300.00
9040		Reducer 1000 to 540 RPM for 13 Series Snowblowers, Models (SB1392, SB1308, SB1309) *Bundle Number 5RDF0023 is needed to complete kit.*	3,078.44
9050		Quick Disconnect Yoke Series 08, 1-3/4 In., 20 Splines for Series 13 Snowblowers, Models (SB1392, SB1308, SB1309) *Bundle Number 5RDF0022 is needed to complete kit.*	255.14
		ATTACHMENTS FOR FIELD CONVERSION	
		Miscellaneous:	
	5RDF0007	2nd Auger Kit - 15 In. Diameter	1,126.28
	5RDF0003	Cutting Edge - CHT400 Steel	226.83
	5RDF0015	Drift Cutters	468.45
	5RDF0009	Hydraulic Cylinder Kit for Chute Deflector	314.56
	5RDF0023	Quick disconnect Yoke series 08, 1-3/4", 20 splines for series 13 snowblowers, models (SB1392, SB1308, and SB1309) *Bundle Number 5RDF0022 is needed to complete kit.*	267.52
	5RDF0022	Reducer 1000 to 540 RPM for 13 series snowblowers, models (SB1392, SB1308, and SB1309) *Bundle Number 5RDF0023 is needed to complete kit.*	3,227.88

SB1309R - 9 Ft. 3-Point Commercial Rotating Drum Snowblower with Hydraulic Motor Chute Rotation and Single Auger - U.S.

Equipment for Base Machine

Function: Snow Removal
Working Width: 104 In.
Transport Width: 105 In.
Working Height: 44 In.
Length: 67 In.
Single/Dual Auger: Single/Dual
Auger Diameter: 24 In.
Auger Flighting Thickness: 7/16 In.
Impeller Diameter: 31-1/2 In.
Impeller Width: 14 In.
Impeller Shaft Diameter: 2 In.
Number of Impeller Blades: 6
Roller Chain: 80
Drive Sprocket: 12 Teeth
Driven Sprocket: 34 Teeth
Chain Idler: Automatic Adjustment
Gear Box Manufacturer: Comer
Gear Box Description: Model T-279A
Gear Box HP (Through Gears): 100 HP
Gear Box HP (Straight Through): 185 HP
Tractor RPM: 540/1000 RPM
Impeller RPM: 540 RPM
Auger RPM: 190 RPM
PTO Manufacturer: Comer
PTO Description: 80
PTO Clutch Setting (Number): 3000
Shearbolt Bolt Size and Grade (PTO):
  M10 6.8 Metric
Shearbolt Bolt Size and Grade (Auger):
  5/16 In. 5 SAE
Skid Shoe: Adjustable
Skid Shoe Material: Steel
End Plate Thickness: 5/16 In.
Back Plate Thickness: 10 Gauge
Impeller Housing Thickness: 3/16 In.
Impeller Blade Thickness: 1/2 In.
Side Panel Bottom Thickness: 5/8 In.
Cutting Edge: Bolt-on/Reversible
Cutting Edge Dimension: 1/2 In. x 4 In.
Chute Diameter: 14-7/8 In.
Chute Base: Heavy Duty
Chute Rotation: 270 Degrees
Parking Stand: Standard
Hitch Category: Category II/III
Quick Hitch Compatibility:
  Quick Hitch Compatible
HP Requirements (Minimum-Maximum HP):
  90-180 HP
Operating Weight: 2336 lbs.
Shipping Weight: 2385 lbs.
Approximate Set-Up Time: 100 Minutes
Chute Deflector Adjustment (Standard):
  Manual - Must Choose a Chute Option
Chute Deflector Adjustment Options:
  Hydraulic Cylinder (2 In. x 8 In.)
  Including Hoses and Tips
Chute Rotation (Standard):
  Hydraulic Motor Chute Rotation
  Including Hoses and Tips
Chute Rotation Options: N/A
Chute:
  Two Part, Includes Manual Deflector
  Three Part, Includes Cylinder
    (2 In. x 8 In.), Hoses and Tips
Dual Auger: 15 In. Diameter Auger
Rotating Drum (Including Hoses and Tips):
  Standard

CODE	ATTACHMENT IDENTIFIER	DESCRIPTION	SUGGESTED LIST PRICE USD ($)
		Select One Code From Each Required Category	
		BASE MACHINE	
3813XF		SB1309R - 9 Ft. 3-Point Commercial Rotating Drum Snowblower with Hydraulic Motor Chute Rotation and Single Auger - U.S.	12,398.61
		CHUTES	
1000		2 Part Chute *Includes manual deflector.*	In Base Price
1010		3 Part Chute *Includes cylinders, hoses, and tips.*	557.00
		ATTACHMENTS - ORDER AS DESIRED	
9000		Cutting Edge - CHT400 Steel	317.56
9010		2nd Auger Kit *15 In. diameter.*	1,192.00

SB1309R - 9 Ft. 3-Point Commercial Rotating Drum Snowblower with Hydraulic Motor Chute Rotation and Single Auger - U.S.

Continued

CODE	ATTACHMENT IDENTIFIER	DESCRIPTION	SUGGESTED LIST PRICE USD ($)
		ATTACHMENTS - ORDER AS DESIRED ...Continued...	
9020		Drift Cutters	348.58
9030		Hydraulic Cylinder Kit for Chute Deflector	300.00
9040		Reducer 1000 to 540 RPM for 13 Series Snowblowers, Models (SB1392, SB1308, SB1309) *Bundle Number 5RDF0023 is needed to complete kit.*	3,078.44
9050		Quick Disconnect Yoke Series 08, 1-3/4 In., 20 Splines for Series 13 Snowblowers, Models (SB1392, SB1308, SB1309) *Bundle Number 5RDF0022 is needed to complete kit.*	255.14
		ATTACHMENTS FOR FIELD CONVERSION	
		Miscellaneous:	
	5RDF0008	2nd Auger Kit - 15 In. Diameter	1,248.73
	5RDF0004	Cutting Edge - CHT400 Steel	275.71
	5RDF0015	Drift Cutters	468.45
	5RDF0009	Hydraulic Cylinder Kit for Chute Deflector	314.56
	5RDF0023	Quick disconnect Yoke series 08, 1-3/4", 20 splines for series 13 snowblowers, models (SB1392, SB1308, and SB1309) *Bundle Number 5RDF0022 is needed to complete kit.*	267.52
	5RDF0022	Reducer 1000 to 540 RPM for 13 series snowblowers, models (SB1392, SB1308, and SB1309) *Bundle Number 5RDF0023 is needed to complete kit.*	3,227.88

SB1388R - 88 In. 3-Point Commercial Rotating Drum Snowblower with Hydraulic Motor Chute Rotation and Single Auger - U.S.

Equipment for Base Machine

Function: Snow Removal
Working Width: 88 In.
Transport Width: 88.5 In.
Working Height: 40 In.
Length: 62.5 In.
Single/Dual Auger: Single/Dual
Auger Diameter: 22 In.
Auger Flighting Thickness: 7/16 In.
Impeller Diameter: 28-1/2 In.
Impeller Width: 12 In.
Impeller Shaft Diameter: 1-9/16 In.
Number of Impeller Blades: 5
Roller Chain: 80
Drive Sprocket: 11 Teeth
Driven Sprocket: 34 Teeth
Chain Idler: Automatic Adjustment
Gear Box Manufacturer: Comer
Gear Box Description: Model T-27D
Gear Box HP (Through Gears): 55 HP
Gear Box HP (Straight Through): 105 HP
Tractor RPM: 540 RPM
Impeller RPM: 540 RPM
Auger RPM: 175 RPM
PTO Manufacturer: Comer
PTO Description: 60
PTO Clutch Setting (Number): 1900
Shearbolt Bolt Size and Grade (PTO):
M10 6.8 Metric
Shearbolt Bolt Size and Grade (Auger):
5/16 In. 5 SAE
Skid Shoe: Adjustable
Skid Shoe Material: Steel
End Plate Thickness: 1/4 In.
Back Plate Thickness: 11 Gauge
Impeller Housing Thickness: 3/16 In.
Impeller Blade Thickness: 3/8 In.
Side Panel Bottom Thickness: 5/8 In.
Cutting Edge: Bolt-on/Reversible
Cutting Edge Dimension: 1/2 In. x 4 In.
Chute Diameter: 12 3/4 In.
Chute Base: Heavy Duty
Chute Rotation: 270 Degrees
Parking Stand: Standard
Hitch Category: Category II
Quick Hitch Compatibility:
Quick Coupler Compatible
HP Requirements (Minimum-Maximum HP):
45-95 HP
Operating Weight: 1670 lbs.
Shipping Weight: 1715 lbs.
Approximate Set-Up Time: 90 Minutes
Chute Deflector Adjustment (Standard):
Manual - Must Choose a Chute Option
Chute Deflector Adjustment Options:
Hydraulic Cylinder (2 In. x 8 In.)
Including Hoses and Tips
Chute Rotation (Standard):
Hydraulic Motor Chute Rotation
Including Hoses and Tips
Chute Rotation Options: N/A
Chute:
Two Part, Includes Manual Deflector
Three Part, Includes Cylinder
(2 In. x 8 In.), Hoses and Tips
Dual Auger: 14 In. Diameter Auger
Rotating Drum (Including Hoses and Tips):
Standard

CODE	ATTACHMENT IDENTIFIER	DESCRIPTION	SUGGESTED LIST PRICE USD ($)

Select One Code From Each Required Category

BASE MACHINE

3815XF	SB1388R - 88 In. 3-Point Commercial Rotating Drum Snowblower with Hydraulic Motor Chute Rotation and Single Auger - U.S.	9,532.52

CHUTES

1000	2 Part Chute *Includes manual deflector.*	In Base Price
1010	3 Part Chute *Includes cylinders, hoses, and tips.*	608.00

ATTACHMENTS - ORDER AS DESIRED

9000	Cutting Edge - CHT400 Steel	257.11
9010	2nd Auger Kit *14 In. diameter.*	932.41

SB1388R - 88 In. 3-Point Commercial Rotating Drum Snowblower with Hydraulic Motor Chute Rotation and Single Auger - U.S.

Continued

CODE	ATTACHMENT IDENTIFIER	DESCRIPTION	SUGGESTED LIST PRICE USD ($)
		ATTACHMENTS - ORDER AS DESIRED ...Continued...	
9020		Drift Cutters	420.00
9030		Hydraulic Cylinder Kit for Chute Deflector	300.00
		ATTACHMENTS FOR FIELD CONVERSION	
		Miscellaneous:	
	5RDF0005	2nd Auger Kit - 14 In. Diameter	977.67
	5RDF0001	Cutting Edge - CHT400 Steel	213.52
	5RDF0014	Drift Cutters	440.17
	5RDF0009	Hydraulic Cylinder Kit for Chute Deflector	314.56

SB1388 - 88 In. 3-Point Commercial Snowblower with Hydraulic Motor Chute Rotation and Single Auger - U.S.

Equipment for Base Machine

Function: Snow Removal
Working Width: 88 In.
Transport Width: 88.5 In.
Working Height: 40 In.
Length: 61 In.
Single/Dual Auger: Single/Dual
Auger Diameter: 22 In.
Auger Flighting Thickness: 7/16 In.
Impeller Diameter: 28-1/2 In.
Impeller Width: 12 In.
Impeller Shaft Diameter: 1-9/16 In.
Number of Impeller Blades: 5
Roller Chain: 80
Drive Sprocket: 11 Teeth
Driven Sprocket: 34 Teeth
Chain Idler: Automatic Adjustment
Gear Box Manufacturer: Comer
Gear Box Description: Model T-27D
Gear Box HP (Through Gears): 55 HP
Gear Box HP (Straight Through): 105 HP
Tractor RPM: 540 RPM
Impeller RPM: 540 RPM
Auger RPM: 175 RPM
PTO Manufacturer: Comer
PTO Description: 60
PTO Clutch Setting (Number): 1900
Shearbolt Bolt Size and Grade (PTO):
M10 6.8 Metric
Shearbolt Bolt Size and Grade (Auger):
5/16 In. 5 SAE
Skid Shoe: Adjustable
Skid Shoe Material: Steel
End Plate Thickness: 1/4 In.
Back Plate Thickness: 11 Gauge
Impeller Housing Thickness: 1/4 In.
Impeller Blade Thickness: 3/8 In.
Side Panel Bottom Thickness: 5/8 In.
Cutting Edge: Bolt-on/Reversible
Cutting Edge Dimension: 1/2 In. x 4 In.
Chute Diameter: 12-3/4 In.
Chute Base: Heavy Duty
Chute Rotation: 270 Degrees
Parking Stand: Standard
Hitch Category: Category II
Quick Hitch Compatibility:
Quick Coupler Compatible
HP Requirements (Minimum-Maximum HP):
45-95 HP
Operating Weight: 1552 lbs.
Shipping Weight: 1597 lbs.
Approximate Set-Up Time: 90 Minutes
Chute Deflector Adjustment (Standard):
Manual - Must Choose a Chute Option
Chute Deflector Adjustment Options:
Hydraulic Cylinder (2 In. x 8 In.)
Including Hoses and Tips
Chute Rotation (Standard):
Hydraulic Motor Chute Rotation
Including Hoses and Tips
Chute Rotation Options: N/A
Chute:
Two Part, Includes Manual Deflector
Three Part, Includes Cylinder
(2 In. x 8 In.), Hoses and Tips
Dual Auger: 14 In. Diameter Auger
Rotating Drum (Including Hoses and Tips):
N/A

CODE	ATTACHMENT IDENTIFIER	DESCRIPTION	SUGGESTED LIST PRICE USD ($)

Select One Code From Each Required Category

BASE MACHINE

3814XF	SB1388 - 88 In. 3-Point Commercial Snowblower with Hydraulic Motor Chute Rotation and Single Auger - U.S.	8,128.97

CHUTES

1000	2 Part Chute *Includes manual deflector.*	In Base Price
1010	3 Part Chute *Includes cylinders, hoses, and tips.*	608.00

ATTACHMENTS - ORDER AS DESIRED

9000	Cutting Edge - CHT400 Steel	257.11
9010	2nd Auger Kit *14 In. diameter.*	932.41

SB1388 - 88 In. 3-Point Commercial Snowblower with Hydraulic Motor Chute Rotation and Single Auger - U.S.

Continued

CODE	ATTACHMENT IDENTIFIER	DESCRIPTION	SUGGESTED LIST PRICE USD ($)
		ATTACHMENTS - ORDER AS DESIRED ...Continued...	
9020		Drift Cutters	420.00
9030		Hydraulic Cylinder Kit for Chute Deflector	300.00
		ATTACHMENTS FOR FIELD CONVERSION	
		Miscellaneous:	
	5RDF0005	2nd Auger Kit - 14 In. Diameter	977.67
	5RDF0001	Cutting Edge - CHT400 Steel	213.52
	5RDF0014	Drift Cutters	440.17
	5RDF0009	Hydraulic Cylinder Kit for Chute Deflector	314.56

SB1392R - 92 In. 3-Point Commercial Rotating Drum Snowblower with Hydraulic Motor Chute Rotation and Single Auger - U.S.

Equipment for Base Machine

Function: Snow Removal
Working Width: 92 In.
Transport Width: 93 In.
Working Height: 44 In.
Length: 67 In.
Single/Dual Auger: Single/Dual
Auger Diameter: 24 In.
Auger Flighting Thickness: 7/16 In.
Impeller Diameter: 31-1/2 In.
Impeller Width: 14 In.
Impeller Shaft Diameter: 2 In.
Number of Impeller Blades: 6
Roller Chain: 80
Drive Sprocket: 12 Teeth
Driven Sprocket: 34 Teeth
Chain Idler: Automatic Adjustment
Gear Box Manufacturer: Comer
Gear Box Description: Model T-279A
Gear Box HP (Through Gears): 100 HP
Gear Box HP (Straight Through): 185 HP
Tractor RPM: 540/1000 RPM
Impeller RPM: 540 RPM
Auger RPM: 190 RPM
PTO Manufacturer: Comer
PTO Description: 80
PTO Clutch Setting (Number): 3000
Shearbolt Bolt Size and Grade (PTO):
  M10 6.8 Metric
Shearbolt Bolt Size and Grade (Auger):
  5/16 In. 5 SAE
Skid Shoe: Adjustable
Skid Shoe Material: Steel
End Plate Thickness: 5/16 In.
Back Plate Thickness: 10 Gauge
Impeller Housing Thickness: 3/16 In.
Impeller Blade Thickness: 1/2 In.
Side Panel Bottom Thickness: 5/8 In.
Cutting Edge: Bolt-on/Reversible
Cutting Edge Dimension: 1/2 In. x 4 In.
Chute Diameter: 14-7/8 In.
Chute Base: Heavy Duty
Chute Rotation: 270 Degrees
Parking Stand: Standard
Hitch Category: Category II
Quick Hitch Compatibility:
  Quick Coupler Compatible
HP Requirements (Minimum-Maximum HP):
  75-125 HP
Operating Weight: 2183 lbs.
Shipping Weight: 2230 lbs.
Approximate Set-Up Time: 100 Minutes
Chute Deflector Adjustment (Standard):
  Manual - Must Choose a Chute Option
Chute Deflector Adjustment Options:
  Hydraulic Cylinder (2 In. x 8 In.)
  Including Hoses and Tips
Chute Rotation (Standard):
  Hydraulic Motor Chute Rotation
  Including Hoses and Tips
Chute Rotation Options: N/A
Chute:
  Two Part, Includes Manual Deflector
  Three Part, Includes Cylinder
    (2 In. x 8 In.), Hoses, and Tips
Dual Auger: 15 In. Diameter Auger
Rotating Drum (Including Hoses and Tips):
  Standard

CODE	ATTACHMENT IDENTIFIER	DESCRIPTION	SUGGESTED LIST PRICE USD ($)
		Select One Code From Each Required Category	
		BASE MACHINE	
3817XF		SB1392R - 92 In. 3-Point Commercial Rotating Drum Snowblower with Hydraulic Motor Chute Rotation and Single Auger - U.S.	11,583.20
		CHUTES	
1000		2 Part Chute *Includes manual deflector.*	In Base Price
1010		3 Part Chute *Includes cylinders, hoses, and tips.*	557.00
		ATTACHMENTS - ORDER AS DESIRED	
9000		Cutting Edge - CHT400 Steel	257.11
9010		2nd Auger Kit *15 In. diameter.*	1,035.00

SB1392R - 92 In. 3-Point Commercial Rotating Drum Snowblower with Hydraulic Motor Chute Rotation and Single Auger - U.S.

Continued

CODE	ATTACHMENT IDENTIFIER	DESCRIPTION	SUGGESTED LIST PRICE USD ($)
		ATTACHMENTS - ORDER AS DESIRED ...Continued...	
9020		Drift Cutters	348.58
9030		Hydraulic Cylinder Kit for Chute Deflector	300.00
9040		Reducer 1000 to 540 RPM for 13 Series Snowblowers, Models (SB1392, SB1308, SB1309) *Bundle Number 5RDF0023 is needed to complete kit.*	3,078.44
9050		Quick Disconnect Yoke Series 08, 1-3/4 In., 20 Splines for Series 13 Snowblowers, Models (SB1392, SB1308, SB1309) *Bundle Number 5RDF0022 is needed to complete kit.*	255.14
		ATTACHMENTS FOR FIELD CONVERSION	
		Miscellaneous:	
	5RDF0006	2nd Auger Kit - 15 In. Diameter	1,084.99
	5RDF0002	Cutting Edge - CHT400 Steel	213.52
	5RDF0015	Drift Cutters	468.45
	5RDF0009	Hydraulic Cylinder Kit for Chute Deflector	314.56
	5RDF0023	Quick disconnect Yoke series 08, 1-3/4", 20 splines for series 13 snowblowers, models (SB1392, SB1308, and SB1309) *Bundle Number 5RDF0022 is needed to complete kit.*	267.52
	5RDF0022	Reducer 1000 to 540 RPM for 13 series snowblowers, models (SB1392, SB1308, and SB1309) *Bundle Number 5RDF0023 is needed to complete kit.*	3,227.88

SB1392 - 92 In. 3-Point Commercial Snowblower with Hydraulic Motor Chute Rotation and Single Auger - U.S.

Equipment for Base Machine

Function: Snow Removal
Working Width: 92 In.
Transport Width: 93 In.
Working Height: 44 In.
Length: 65.5 In.
Single/Dual Auger: Single/Dual
Auger Diameter: 24 In.
Auger Flighting Thickness: 7/16 In.
Impeller Diameter: 31-1/2 In.
Impeller Width: 14 In.
Impeller Shaft Diameter: 2 In.
Number of Impeller Blades: 6
Roller Chain: 80
Drive Sprocket: 12 Teeth
Driven Sprocket: 34 Teeth
Chain Idler: Automatic Adjustment
Gear Box Manufacturer: Comer
Gear Box Description: Model T-279A
Gear Box HP (Through Gears): 100 HP
Gear Box HP (Straight Through): 185 HP
Tractor RPM: 540/1000 RPM
Impeller RPM: 540 RPM
Auger RPM: 190 RPM
PTO Manufacturer: Comer
PTO Description: 80
PTO Clutch Setting (Number): 3000
Shearbolt Bolt Size and Grade (PTO):
  M10 6.8 Metric
Shearbolt Bolt Size and Grade (Auger):
  5/16 In. 5 SAE
Skid Shoe: Adjustable
Skid Shoe Material: Steel
End Plate Thickness: 5/16 In.
Back Plate Thickness: 10 Gauge
Impeller Housing Thickness: 1/4 In.
Impeller Blade Thickness: 1/2 In.
Side Panel Bottom Thickness: 3/4 In.
Cutting Edge: Bolt-on/Reversible
Cutting Edge Dimension: 1/2 In. x 5 In.
Chute Diameter: 14-7/8 In.
Chute Base: Heavy Duty
Chute Rotation: 270 Degrees
Parking Stand: Standard
Hitch Category: Category II
Quick Hitch Compatibility:
  Quick Coupler Compatible
HP Requirements (Minimum-Maximum HP):
  75-125 HP
Operating Weight: 2044 lbs.
Shipping Weight: 2100 lbs.
Approximate Set-Up Time: 100 Minutes
Chute Deflector Adjustment (Standard):
  Manual - Must Choose a Chute Option
Chute Deflector Adjustment Options:
  Hydraulic Cylinder (2 In. x 8 In.)
  Including Hoses and Tips
Chute Rotation (Standard):
  Hydraulic Motor Chute Rotation
  Including Hoses and Tips
Chute Rotation Options: N/A
Chute:
  Two Part, Includes Manual Deflector
  Three Part, Includes Cylinder
    (2 In. x 8 In.), Hoses and Tips
Dual Auger: 15 In. Diameter Auger
Rotating Drum (Including Hoses and Tips):
  N/A

CODE	ATTACHMENT IDENTIFIER	DESCRIPTION	SUGGESTED LIST PRICE USD ($)

Select One Code From Each Required Category

BASE MACHINE

3816XF	SB1392 - 92 In. 3-Point Commercial Snowblower with Hydraulic Motor Chute Rotation and Single Auger - U.S.	10,006.00

CHUTES

1000	2 Part Chute *Includes manual deflector.*	In Base Price
1010	3 Part Chute *Includes cylinders, hoses, and tips.*	557.00

ATTACHMENTS - ORDER AS DESIRED

9000	Cutting Edge - CHT400 Steel	257.11
9010	2nd Auger Kit *15 In. diameter.*	1,035.00

SB1392 - 92 In. 3-Point Commercial Snowblower with Hydraulic Motor Chute Rotation and Single Auger - U.S.

Continued

CODE	ATTACHMENT IDENTIFIER	DESCRIPTION	SUGGESTED LIST PRICE USD ($)
		ATTACHMENTS - ORDER AS DESIRED ...Continued...	
9020		Drift Cutters	348.58
9030		Hydraulic Cylinder Kit for Chute Deflector	300.00
9040		Reducer 1000 to 540 RPM for 13 Series Snowblowers, Models (SB1392, SB1308, SB1309) *Bundle Number 5RDF0023 is needed to complete kit.*	3,078.44
9050		Quick Disconnect Yoke Series 08, 1-3/4 In., 20 Splines for Series 13 Snowblowers, Models (SB1392, SB1308, SB1309) *Bundle Number 5RDF0022 is needed to complete kit.*	255.14
		ATTACHMENTS FOR FIELD CONVERSION	
		Miscellaneous:	
	5RDF0006	2nd Auger Kit - 15 In. Diameter	1,084.99
	5RDF0002	Cutting Edge - CHT400 Steel	213.52
	5RDF0015	Drift Cutters	468.45
	5RDF0009	Hydraulic Cylinder Kit for Chute Deflector	314.56
	5RDF0023	Quick disconnect Yoke series 08, 1-3/4", 20 splines for series 13 snowblowers, models (SB1392, SB1308, and SB1309) *Bundle Number 5RDF0022 is needed to complete kit.*	267.52
	5RDF0022	Reducer 1000 to 540 RPM for 13 series snowblowers, models (SB1392, SB1308, and SB1309) *Bundle Number 5RDF0023 is needed to complete kit.*	3,227.88

SB2164 - 64 In Hydraulic, 300 Series Carrier Loader Mount Snowblower with Hydraulic Chute Rotation and HP2025 Hydraulic Power Unit - U.S.

Equipment for Base Machine

Function: Snow Removal
Working Width: 64 In. (1,625.6 mm)
Transport Width: 64 In. (1,625.6 mm)
Working Height: 27 In. (685.8 mm)
Single/Dual Auger: Single
Auger Diameter: 15 In.
Auger Flighting Thickness: 5/16 In. (8 mm)
Impeller Diameter: 24 In. (609.6 mm)
Impeller Width: 7 In. (177.8 mm)
Impeller Shaft Diameter: 1.25 In. (31.75 mm)
Number of Impeller Blades: 4
Auger Drive: Hydraulic
Impeller Drive: Hydraulic
Impeller RPM: 680 RPM
Auger RPM: 200 RPM
Skid Shoe: Adjustable
Skid Shoe Material: Steel
End Plate Thickness: 3/16 In. (4.8 mm)
Back Plate Thickness: 11 Gauge (3.18 mm)
Impeller Housing Thickness: 3/16 In. (4.8 mm)
Impeller Blade Thickness: 1/4 In. (6.4 mm)
Side Panel Bottom Thickness: 1/2 In. (12.7 mm)
Cutting Edge: Replaceable
Cutting Edge Dimension: 3/8 In. x 2 In. (9.5 mm x 50.8 mm)
Chute Diameter: 8.25 In. (209.6 mm)
Chute Base: Standard
Chute Rotation: 270 Degrees
Operating Weight: 760 lbs. (344.7 kg)
Shipping Weight: 840 lbs. (381 kg)
Approximate Set-Up Time: 120 Minutes
Chute Deflector Adjustment (Standard):
Must Choose an option Manual Tie Rod or Hydraulic Cylinder
Chute Deflector Adjustment Options:
Electric Solenoid Valve, Switch, and Hydraulic Cylinder
Chute: Two Part ONLY
Dual Auger: N/A
Rotating Drum (Including Hoses and Tips):
N/A
Function: Hydraulic Power Unit
Pressure: 2700 psi
Flow: 16 gpm
Reservoir Capacity: 15 gal.
System Capacity: 17 gal.
System Features: Pressure relieve valve, filter, temperature
and oil level gauge, and thermal protection switch
Hoses, Tips, and Brackets included
Tractor RPM: 540 RPM
PTO Manufacturer: Comer
Parking Stand: Standard
Hitch Category: Category I
Quick Hitch Compatibility:
iMatch Compatible
Approximate Set-Up Time: 120 Minutes

CODE	ATTACHMENT IDENTIFIER	DESCRIPTION	SUGGESTED LIST PRICE USD ($)
		Select One Code From Each Required Category	
		BASE MACHINE	
3822XF		SB2164 - 64 In Hydraulic, 300 Series Carrier Loader Mount Snowblower with Hydraulic Chute Rotation and HP2025 Hydraulic Power Unit - U.S. *Must only be used with HP2025 Hydraulic Power Unit.*	12,464.00
		HYDRAULIC POWER UNITS	
1000		HP2025 - Hydraulic Power Unit, 25 HP *Includes wiring harness to control the loader mounted implement.*	In Base Price
1095		Less HP2025 Hydraulic Power Unit	-6,304.00
		OIL COOLER	
2000		Oil Cooler for HP2025 and HP2134 Hydraulic Power Units *Includes high efficiency oil cooler, electric fan, bolted support, hoses, fittings and installation instructions. Recommended for application generating high heat.* *Not available with option Code 1095.*	In Base Price
2095		Less Oil Cooler	-1,660.00

SB2164 - 64 In Hydraulic, 300 Series Carrier Loader Mount Snowblower with Hydraulic Chute Rotation and HP2025 Hydraulic Power Unit - U.S.

Continued

CODE	ATTACHMENT IDENTIFIER	DESCRIPTION	SUGGESTED LIST PRICE USD ($)
		CHUTES	
3000		SB21 Manual Chute Deflection *Includes manual deflector.*	In Base Price
3010		SB2164 Hydraulic Chute Deflection *Includes cylinders, hoses and fittings.*	585.00
		ATTACHMENTS - ORDER AS DESIRED	
9020		Drift Cutters (SB21)	140.00
9040		Additional Wiring Harness for HP2025 and HP2134 Hydraulic Power Units for Open Operator Station Tractors *Includes complete wiring harness from battery to switch in the console.* *Not available with option Code 1095.*	92.00
		ATTACHMENTS FOR FIELD CONVERSION	
		Miscellaneous:	
	5RDF0038	Additional Wiring Harness for HP2025 and HP2134 Hydraulic Power Units for Open Operator Station Tractors *Includes complete wiring harness from battery to switch in the console.*	100.04
	5RDF0026	Drift Cutters (SB21)	152.23
	5RDF0027	Kit for Hydraulic Chute Deflector (SB2164)	640.71
	5RDF0036	Oil Cooler for HP2025 and HP2134 Hydraulic Power Units *Includes high efficiency oil cooler, electric fan, bolted support, hoses, fittings and installation instructions. Recommended for application generating high heat.*	1,816.59
	5RDF0039	Wiring Harness for HP2025 and HP2134 Hydraulic Power Units to control Loader Mounted Attachment *Includes complete wiring harness from switch in the console to 3 cavities connectors for front implements.*	88.55

SB2176 - 76 In. Hydraulic, 400 Series Carrier Loader Mount Snowblower with Hydraulic Chute Rotation and HP2134 Hydraulic Power Unit - U.S.

Equipment for Base Machine

Function: Snow Removal
Working Width: 76 In. (1,931.4 mm)
Transport Width: 76 In. (1,931.4 mm)
Working Height: 27 In. (685.8 mm)
Single/Dual Auger: Single
Auger Diameter: 15 In.
Auger Flighting Thickness: 5/16 In. (8 mm)
Impeller Diameter: 24 In. (609.6 mm)
Impeller Width: 8.5 In. (215.9 mm)
Impeller Shaft Diameter: 1.25 In. (31.75 mm)
Number of Impeller Blades: 4
Auger Drive: Hydraulic
Impeller Drive: Hydraulic
Impeller RPM: 580 RPM
Auger RPM: 180 RPM
Skid Shoe: Adjustable
Skid Shoe Material: Steel
End Plate Thickness: 3/16 In. (4.8 mm)
Back Plate Thickness: 11 Gauge (3.18 mm)
Impeller Housing Thickness: 3/16 In. (4.8 mm)
Impeller Blade Thickness: 5/16 In. (8 mm)
Side Panel Bottom Thickness: 1/2 In. (12.7 mm)
Cutting Edge: Replaceable
Cutting Edge Dimension: 1/2 In. x 3 In. (12.7 mm x 76.2 mm)
Chute Diameter: 12 In. (0.3m)
Chute Base: Standard
Chute Rotation: 270 Degrees
Operating Weight: 760 lbs. (344.7 kg)
Shipping Weight: 840 lbs. (381 kg)
Approximate Set-Up Time: 120 Minutes
Chute Deflector Adjustment (Standard):
Must Choose an option Manual or Hydraulic
Adjustable Tie Rod or Hydraulic
Chute Deflector Adjustment Options:
Electric Solenoid Valve, Switch, Wiring Harness and Hydraulic Cylinder
Chute: Two Part ONLY
Dual Auger: N/A
Rotating Drum (Including Hoses and Tips):
N/A
Function: Hydraulic Power Unit
Pressure: 2700 psi
Flow: 16 gpm
Reservoir Capacity: 15 gal.
System Capacity: 17 gal.
System Features: Pressure relieve valve, filter, temperature
and oil level gauge, and thermal protection switch
Hoses, Tips, and Brackets included
Tractor RPM: 540 RPM
PTO Manufacturer: Comer
Parking Stand: Standard
Hitch Category: Category I
Quick Hitch Compatibility:
iMatch Compatible
Approximate Set-Up Time: 120 Minutes

CODE	ATTACHMENT IDENTIFIER	DESCRIPTION	SUGGESTED LIST PRICE USD ($)
		Select One Code From Each Required Category	
		BASE MACHINE	
3821XF		SB2176 - 76 In. Hydraulic, 400 Series Carrier Loader Mount Snowblower with Hydraulic Chute Rotation and HP2134 Hydraulic Power Unit - U.S. *Must only be used with HP2134 Hydraulic Power Unit.*	13,094.00
		HYDRAULIC POWER UNITS	
1010		HP2134 - Hydraulic Power Unit, 34 HP *Includes wiring harness to control the loader mounted implement.*	In Base Price
1095		Less HP2134 Hydraulic Power Unit	-6,412.00
		OIL COOLER	
2000		Oil Cooler for HP2025 and HP2134 Hydraulic Power Units *Includes high efficiency oil cooler, electric fan, bolted support, hoses, fittings and installation instructions. Recommended for application generating high heat.* *Not available with option Code 1095.*	In Base Price
2095		Less Oil Cooler	-1,660.00

SB2176 - 76 In. Hydraulic, 400 Series Carrier Loader Mount Snowblower with Hydraulic Chute Rotation and HP2134 Hydraulic Power Unit - U.S.

Continued

CODE	ATTACHMENT IDENTIFIER	DESCRIPTION	SUGGESTED LIST PRICE USD ($)
		CHUTES	
3000		SB21 Manual Chute Deflection *Includes manual deflector.*	In Base Price
3010		SB2176 Hydraulic Chute Deflection *Includes cylinders, hoses and fittings.*	585.00
		ATTACHMENTS - ORDER AS DESIRED	
9020		Drift Cutters (SB21)	140.00
9040		Additional Wiring Harness for HP2025 and HP2134 Hydraulic Power Units for Open Operator Station Tractors *Includes complete wiring harness from battery to switch in the console.* *Not available with option Code 1095.*	92.00
		ATTACHMENTS FOR FIELD CONVERSION	
		Miscellaneous:	
	5RDF0038	Additional Wiring Harness for HP2025 and HP2134 Hydraulic Power Units for Open Operator Station Tractors *Includes complete wiring harness from battery to switch in the console.*	100.04
	5RDF0026	Drift Cutters (SB21)	152.23
	5RDF0037	Hydraulic Power Unit Cooler Upgrade (HP2134) *Includes complete cooling unit and thermal by-pass manifold. Bolted support for manifold, hoses, fittings, wiring harness and installation instructions. Only for first year power units sold together with a SB2176. Recommended for application generating high heat.*	2,505.58
	5RDF0025	Kit for Hydraulic Chute Deflector (SB2176)	640.71
	5RDF0036	Oil Cooler for HP2025 and HP2134 Hydraulic Power Units *Includes high efficiency oil cooler, electric fan, bolted support, hoses, fittings and installation instructions. Recommended for application generating high heat.*	1,816.59
	5RDF0039	Wiring Harness for HP2025 and HP2134 Hydraulic Power Units to control Loader Mounted Attachment *Includes complete wiring harness from switch in the console to 3 cavities connectors for front implements.*	88.55

SB1148 - 48 In. 3-Point Medium Snowblower - Canada

Equipment for Base Machine

Function: Snow Removal
Working Width: 48 In.
Transport Width: 48.5 In.
Working Height: 24 5/8 In.
Length: 38.5 In.
Single/Dual Auger: Single
Auger Diameter: 15 In.
Auger Flighting Thickness: 1/4 In.
Impeller Diameter: 20 In.
Impeller Width: 6 In.
Impeller Shaft Diameter: 1 In.
Number of Impeller Blades: 4
Roller Chain: 50
Drive Sprocket: 17 Teeth
Driven Sprocket: 36 Teeth
Chain Idler: Manual Adjustment
Gear Box Manufacturer: Comer
Gear Box Description: Model L-25J
Gear Box HP (Through Gears): 11
Gear Box HP (Straight Through): 30
Tractor RPM: 540 RPM
Impeller RPM: 540 RPM
Auger RPM: 170 RPM
PTO Manufacturer: Comer
PTO Description: 20
PTO Clutch Setting (Number): 900
Shearbolt Bolt Size and Grade (PTO):
M6 8.8 Metric
Shearbolt Bolt Size and Grade (Auger):
1/4 In. 5 SAE
Skid Shoe: Adjustable
Skid Shoe Material: Steel
End Plate Thickness: 3/16 In.
Back Plate Thickness: 12 Gauge
Impeller Housing Thickness: 12 Gauge
Impeller Blade Thickness: 3/16 In.
Side Panel Bottom Thickness: 3/16 In.
Cutting Edge: Welded
Cutting Edge Dimension: 3/8 In. x 2 In.
Chute Diameter: 8 In.
Chute Base: Standard
Chute Rotation: 215 Degrees
Parking Stand: Standard
Hitch Category: Category I
Quick Hitch Compatibility:
iMatch Compatible
HP Requirements (Minimum-Maximum HP):
16-35 HP
Operating Weight: 375 lbs.
Shipping Weight: 415 lbs.
Approximate Set-up Time: 60 Minutes
Chute Deflector Adjustment (Standard):
Manual
Chute Deflector Adjustment Options:
Hydraulic Cylinder (2 In. x 5 In.)
Including Brackets, Hoses, and Tips
Electric Actuator (5 In).
Including Hardware, Switch, and Electric Cable
Chute Rotation (Standard): Must Choose
an Option, Manual or Hydraulic
Chute Rotation Options:
Manual, Worm Gear with Crank
Hydraulic: Motor
Including Flow Restrictors, Hoses, and Tips
Chute: Two Part ONLY
Dual Auger: N/A
Rotating Drum (Including Hoses and Tips):
N/A

CODE	ATTACHMENT IDENTIFIER	DESCRIPTION	SUGGESTED LIST PRICE USD ($)
		Select One Code From Each Required Category	
		BASE MACHINE	
380AXF		SB1148 - 48 In. 3-Point Medium Snowblower - Canada	2,486.26
		CHUTES	
1000		Manual Chute Rotation Kit	In Base Price
1010		Hydraulic Cylinder Kit for Chute Rotation	335.03
		ATTACHMENTS - ORDER AS DESIRED	
9000		Hydraulic Cylinder Kit for Chute Deflector	287.31
9010		Electric Kit for Chute Deflector *Includes 5 In. actuator.*	832.50
		ATTACHMENTS FOR FIELD CONVERSION	

SB1148 - 48 In. 3-Point Medium Snowblower - Canada

Continued

CODE	ATTACHMENT IDENTIFIER	DESCRIPTION	SUGGESTED LIST PRICE USD ($)
		ATTACHMENTS FOR FIELD CONVERSION ...Continued...	
		Miscellaneous:	
	5RDF0049A	Electric Kit for Chute Deflector - Includes 5 In. Actuator *For snowblowers with serial number 1XFSB11XB0111288 and above.*	859.82
	5RDF0019	Hydraulic Cylinder Kit for Chute Deflector *For snowblowers with serial number 1XFSB11XB0111287 and below.*	262.15
	5RDF0048A	Hydraulic Cylinder Kit for Chute Deflector *For snowblowers with serial number 1XFSB11XB0111288 and above.*	296.74
	5RDF0017	Hydraulic Cylinder Kit for Chute Rotation *For snowblowers with serial number 1XFSB11XB0111287 and below.*	466.92
	5RDF0047	Hydraulic Cylinder Kit for Chute Rotation *For snowblowers with serial number 1XFSB11XB0111288 and above.*	496.92
	5RDF0016	Manual Chute Rotation Kit (SB11) *For snowblowers with serial number 1XFSB11XB0111287 and below.*	148.93
	5RDF0046	Manual Chute Rotation Kit (SB11) *For snowblowers with serial number 1XFSB11XB0111288 and above.*	150.57

SB1154 - 54 In. 3-Point Medium Snowblower - Canada

Equipment for Base Machine

Function: Snow Removal
Working Width: 54 In.
Transport Width: 54.5 In.
Working Height: 26 In.
Length: 41 In.
Single/Dual Auger: Single
Auger Diameter: 15 In.
Auger Flighting Thickness: 5/16 In.
Impeller Diameter: 24 In.
Impeller Width: 7 In.
Impeller Shaft Diameter: 1-3/8 In.
Number of Impeller Blades: 4
Roller Chain: 60
Drive Sprocket: 10 Teeth
Driven Sprocket: 32 Teeth
Chain Idler: Manual Adjustment
Gear Box Manufacturer: Comer
Gear Box Description: Model T-281A
Gear Box HP (Through Gears): 23 HP
Gear Box HP (Straight Through): 60 HP
Tractor RPM: 540 RPM
Impeller RPM: 540 RPM
Auger RPM: 170 RPM
PTO Manufacturer: Comer
PTO Description: 40
PTO Clutch Setting (Number): 1300
Shearbolt Bolt Size and Grade (PTO):
M10 8.8 Metric
Shearbolt Bolt Size and Grade (Auger):
5/16 In. 5 SAE
Skid Shoe: Adjustable
Skid Shoe Material: Steel
End Plate Thickness: 3/16 In.
Back Plate Thickness: 12 Gauge
Impeller Housing Thickness: 12 Gauge
Impeller Blade Thickness: 3/16 In.
Side Panel Bottom Thickness: 3/16 In.
Cutting Edge: Welded
Cutting Edge Dimension: 3/8 In. x 2 In.
Chute Diameter: 8 In.
Chute Base: Standard
Chute Rotation: 215 Degrees
Parking Stand: Standard
Hitch Category: Category I
Quick Hitch Compatibility:
iMatch Compatible
HP Requirements (Minimum-Maximum HP):
16-35 HP
Operating Weight: 455 lbs.
Shipping Weight: 495 lbs.
Approximate Set-up Time: 60 Minutes
Chute Deflector Adjustment (Standard):
Manual
Chute Deflector Adjustment Options:
Hydraulic Cylinder (2 In. x 5 In.)
Including Brackets, Hoses, and Tips
Electric Actuator (5 In).
Including Hardware, Switch, and Electric Cable
Chute Rotation (Standard): Must Choose an
Option - Manual or Hydraulic
Chute Rotation Options:
Manual, Worm Gear with Crank
Hydraulic: Motor
Including Flow Restrictors, Hoses, and Tips
Chute: Two Part ONLY
Dual Auger: MN/A
Rotating Drum (Including Hoses and Tips):
N/A

CODE	ATTACHMENT IDENTIFIER	DESCRIPTION	SUGGESTED LIST PRICE USD ($)

Select One Code From Each Required Category

BASE MACHINE

380BXF	SB1154 - 54 In. 3-Point Medium Snowblower - Canada	2,762.44

CHUTES

1000	Manual Chute Rotation Kit	In Base Price
1010	Hydraulic Cylinder Kit for Chute Rotation	335.03

ATTACHMENTS - ORDER AS DESIRED

9000	Hydraulic Cylinder Kit for Chute Deflector	287.31
9010	Electric Kit for Chute Deflector *Includes 5 In. actuator.*	832.50

ATTACHMENTS FOR FIELD CONVERSION

SB1154 - 54 In. 3-Point Medium Snowblower - Canada
Continued

CODE	ATTACHMENT IDENTIFIER	DESCRIPTION	SUGGESTED LIST PRICE USD ($)
		ATTACHMENTS FOR FIELD CONVERSION ...Continued...	
		Miscellaneous:	
	5RDF0020	Electric Kit for Chute Deflector - Includes 4 In. Actuator *For snowblowers with serial number 1XFSB11XAB0111287 and below.*	869.29
	5RDF0049A	Electric Kit for Chute Deflector - Includes 5 In. Actuator *For snowblowers with serial number 1XFSB11XB0111288 and above.*	859.82
	5RDF0019	Hydraulic Cylinder Kit for Chute Deflector *For snowblowers with serial number 1XFSB11XB0111287 and below.*	262.15
	5RDF0048A	Hydraulic Cylinder Kit for Chute Deflector *For snowblowers with serial number 1XFSB11XB0111288 and above.*	296.74
	5RDF0017	Hydraulic Cylinder Kit for Chute Rotation *For snowblowers with serial number 1XFSB11XB0111287 and below.*	466.92
	5RDF0047	Hydraulic Cylinder Kit for Chute Rotation *For snowblowers with serial number 1XFSB11XB0111288 and above.*	496.92
	5RDF0016	Manual Chute Rotation Kit (SB11) *For snowblowers with serial number 1XFSB11XB0111287 and below.*	148.93
	5RDF0046	Manual Chute Rotation Kit (SB11) *For snowblowers with serial number 1XFSB11XB0111288 and above.*	150.57

SB1164 - 64 In. 3-Point Medium Snowblower - Canada

Equipment for Base Machine

Function: Snow Removal
Working Width: 64 In.
Transport Width: 64.5 In.
Working Height: 26 In.
Length: 41 In.
Single/Dual Auger: Single
Auger Diameter: 15 In.
Auger Flighting Thickness: 5/16 In.
Impeller Diameter: 24 In.
Impeller Width: 7 In.
Impeller Shaft Diameter: 1-3/8 In.
Number of Impeller Blades: 4
Roller Chain: 60
Drive Sprocket: 10 Teeth
Driven Sprocket: 32 Teeth
Chain Idler: Manual Adjustment
Gear Box Manufacturer: Comer
Gear Box Description: Model T-281A
Gear Box HP (Through Gears): 23 HP
Gear Box HP (Straight Through): 60 HP
Tractor RPM: 540 RPM
Impeller RPM: 540 RPM
Auger RPM: 170 RPM
PTO Manufacturer: Comer
PTO Description: 40
PTO Clutch Setting (Number): 1300
Shearbolt Bolt Size and Grade (PTO):
M10 8.8 Metric
Shearbolt Bolt Size and Grade (Auger):
5/16 In. 5 SAE
Skid Shoe: Adjustable
Skid Shoe Material: Steel
End Plate Thickness: 3/16 In.
Back Plate Thickness: 12 Gauge
Impeller Housing Thickness: 12 Gauge
Impeller Blade Thickness: 3/16 In.
Side Panel Bottom Thickness: 3/16 In.
Cutting Edge: Welded
Cutting Edge Dimension: 3/8 In. x 2 In.
Chute Diameter: 8 In.
Chute Base: Standard
Chute Rotation: 215 Degrees
Parking Stand: Standard
Hitch Category: Category I
Quick Hitch Compatibility:
iMatch Compatible
HP Requirements (Minimum-Maximum HP):
20-50 HP
Operating Weight: 479 lbs.
Shipping Weight: 519 lbs.
Approximate Set-Up Time: 60 Minutes
Chute Deflector Adjustment (Standard):
Manual
Chute Deflector Adjustment Options:
Hydraulic Cylinder (2 In. x 5 In.)
Including Brackets, Hoses, and Tips
Electric Actuator (5In).
Including Hardware, Switch, and Electric Cable
Chute Rotation (Standard): Must Choose an
Option - Manual or Hydraulic
Chute Rotation Options:
Manual, Worm Gear with Crank
Hydraulic: Motor
Including Flow Restrictors, Hoses, and Tips
Chute: Two Part ONLY
Dual Auger: N/A
Rotating Drum (Including Hoses and Tips):
N/A

CODE	ATTACHMENT IDENTIFIER	DESCRIPTION	SUGGESTED LIST PRICE USD ($)

Select One Code From Each Required Category

BASE MACHINE

380CXF	SB1164 - 64 In. 3-Point Medium Snowblower - Canada	2,845.69

CHUTES

1000	Manual Chute Rotation Kit	In Base Price
1010	Hydraulic Cylinder Kit for Chute Rotation	335.03

ATTACHMENTS - ORDER AS DESIRED

9000	Hydraulic Cylinder Kit for Chute Deflector	287.31
9010	Electric Kit for Chute Deflector *Includes 5 In. actuator.*	832.50

ATTACHMENTS FOR FIELD CONVERSION

SB1164 - 64 In. 3-Point Medium Snowblower - Canada
Continued

CODE	ATTACHMENT IDENTIFIER	DESCRIPTION	SUGGESTED LIST PRICE USD ($)
		ATTACHMENTS FOR FIELD CONVERSION ...Continued...	
		Miscellaneous:	
	5RDF0020	Electric Kit for Chute Deflector - Includes 4 In. Actuator *For snowblowers with serial number 1XFSB11XAB0111287 and below.*	869.29
	5RDF0049A	Electric Kit for Chute Deflector - Includes 5 In. Actuator *For snowblowers with serial number 1XFSB11XB0111288 and above.*	859.82
	5RDF0019	Hydraulic Cylinder Kit for Chute Deflector *For snowblowers with serial number 1XFSB11XB0111287 and below.*	262.15
	5RDF0048A	Hydraulic Cylinder Kit for Chute Deflector *For snowblowers with serial number 1XFSB11XB0111288 and above.*	296.74
	5RDF0017	Hydraulic Cylinder Kit for Chute Rotation *For snowblowers with serial number 1XFSB11XB0111287 and below.*	466.92
	5RDF0047	Hydraulic Cylinder Kit for Chute Rotation *For snowblowers with serial number 1XFSB11XB0111288 and above.*	496.92
	5RDF0016	Manual Chute Rotation Kit (SB11) *For snowblowers with serial number 1XFSB11XB0111287 and below.*	148.93
	5RDF0046	Manual Chute Rotation Kit (SB11) *For snowblowers with serial number 1XFSB11XB0111288 and above.*	150.57

SB1174 - 74 In. 3-Point Medium Snowblower - Canada

Equipment for Base Machine

Function: Snow Removal
Working Width: 74 In.
Transport Width: 74.5 In.
Working Height: 26 In.
Length: 47.5 In.
Single/Dual Auger: Single
Auger Diameter: 15 In.
Auger Flighting Thickness: 5/16 In.
Impeller Diameter: 24 In.
Impeller Width: 9 In.
Impeller Shaft Diameter: 1-3/8 In.
Number of Impeller Blades: 4
Roller Chain: 60
Drive Sprocket: 10 Teeth
Driven Sprocket: 32 Teeth
Chain Idler: Manual Adjustment
Gear Box Manufacturer: Comer
Gear Box Description: Model T-281A
Gear Box HP (Through Gears): 23 HP
Gear Box HP (Straight Through): 60 HP
Tractor RPM: 540 RPM
Impeller RPM: 540 RPM
Auger RPM: 170 RPM
PTO Manufacturer: Comer
PTO Description: 50
PTO Clutch Setting (Number): 1700
Shearbolt Bolt Size and Grade (PTO):
M10 8.8 Metric
Shearbolt Bolt Size and Grade (Auger):
5/16 In. 5 SAE
Skid Shoe: Adjustable
Skid Shoe Material: Steel
End Plate Thickness: 3/16 In.
Back Plate Thickness: 11 Gauge
Impeller Housing Thickness: 11 Gauge
Impeller Blade Thickness: 1/4 In.
Side Panel Bottom Thickness: 3/16 In.
Cutting Edge: Welded
Cutting Edge Dimension: 3/8 In. x 2 In.
Chute Diameter: 12 In.
Chute Base: Standard
Chute Rotation: 215 Degrees
Parking Stand: Standard
Hitch Category: Category I
Quick Hitch Compatibility:
iMatch Compatible
HP Requirements (Minimum-Maximum HP):
20-50 HP
Operating Weight: 590 lbs.
Shipping Weight: 635 lbs.
Approximate Set-Up Time: 60 Minutes
Chute Deflector Adjustment (Standard):
Manual
Chute Deflector Adjustment Options:
Hydraulic Cylinder (2 In. x 5 In.)
Including Brackets, Hoses and Tips
Electric Actuator (8 In).
Including Hardware, Switch, and Electric Cable
Chute Rotation (Standard): Must Choose an
Option - Manual or Hydraulic
Manual, Worm Gear with Crank
Hydraulic: Motor
Including Flow Restrictors, Hoses, and Tips
Chute: Two Part ONLY
Dual Auger: N/A
Rotating Drum (Including Hoses and Tips):
N/A

CODE	ATTACHMENT IDENTIFIER	DESCRIPTION	SUGGESTED LIST PRICE USD ($)

Select One Code From Each Required Category

BASE MACHINE

380DXF	SB1174 - 74 In. 3-Point Medium Snowblower - Canada	3,584.77

CHUTES

1000	Manual Chute Rotation Kit	In Base Price
1010	Hydraulic Cylinder Kit for Chute Rotation	335.03

ATTACHMENTS - ORDER AS DESIRED

9000	Hydraulic Cylinder Kit for Chute Deflector	287.31
9010	Electric Kit for Chute Deflector *Includes 8 In. actuator.*	832.50

ATTACHMENTS FOR FIELD CONVERSION

SB1174 - 74 In. 3-Point Medium Snowblower - Canada

Continued

CODE	ATTACHMENT IDENTIFIER	DESCRIPTION	SUGGESTED LIST PRICE USD ($)
		ATTACHMENTS FOR FIELD CONVERSION ...Continued...	
		Miscellaneous:	
	5RDF0021	Electric Kit for Chute Deflector - Includes 8 In. Actuator	859.82
	5RDF0009	Hydraulic Cylinder Kit for Chute Deflector *For snowblowers with serial number 1XFSB11XB0111287 and below.*	314.56
	5RDF0048A	Hydraulic Cylinder Kit for Chute Deflector *For snowblowers with serial number 1XFSB11XB0111288 and above.*	296.74
	5RDF0018	Hydraulic Cylinder Kit for Chute Rotation *For snowblowers with serial number 1XFSB11XB0111287 and below.*	553.89
	5RDF0047	Hydraulic Cylinder Kit for Chute Rotation *For snowblowers with serial number 1XFSB11XB0111288 and above.*	496.92
	5RDF0016	Manual Chute Rotation Kit (SB11) *For snowblowers with serial number 1XFSB11XB0111287 and below.*	148.93
	5RDF0046	Manual Chute Rotation Kit (SB11) *For snowblowers with serial number 1XFSB11XB0111288 and above.*	150.57

SB1184 - 84 In. 3-Point Medium Snowblower - Canada

Equipment for Base Machine

Function: Snow Removal
Working Width: 84 In.
Transport Width: 85.5 In.
Working Height: 34 In.
Length: 55.5 In.
Single/Dual Auger: Single
Auger Diameter: 20 In.
Auger Flighting Thickness: 3/8 In.
Impeller Diameter: 27-1/2 In.
Impeller Width: 10.5 In.
Impeller Shaft Diameter: 1-9/16 In.
Number of Impeller Blades: 4
Roller Chain: 60
Drive Sprocket: 12 Teeth
Driven Sprocket: 38 Teeth
Chain Idler: Manual Adjustment
Gear Box Manufacturer: Comer
Gear Box Description: Model T-27D
Gear Box HP (Through Gears): 55 HP
Gear Box HP (Straight Through): 105 HP
Tractor RPM: 540 RPM
Impeller RPM: 540 RPM
Auger RPM: 170 RPM
PTO Manufacturer: Comer
PTO Description: 60
PTO Clutch Setting (Number): 1900
Shearbolt Bolt Size and Grade (PTO):
M10 6.8 Metric
Shearbolt Bolt Size and Grade (Auger):
5/16 In. 5 SAE
Skid Shoe: Adjustable
Skid Shoe Material: Steel
End Plate Thickness: 3/16 In.
Back Plate Thickness: 11 Gauge
Impeller Housing Thickness: 11 Gauge
Impeller Blade Thickness: 3/8 In.
Side Panel Bottom Thickness: 3/16 In.
Cutting Edge: Welded
Cutting Edge Dimension: 1/2 In. x 3 In.
Chute Diameter: 12 In.
Chute Base: Standard
Chute Rotation: 215 Degrees
Parking Stand: Standard
Hitch Category: Category I/II
Quick Hitch Compatibility:
iMatch Compatible and
Quick Coupler Compatible
HP Requirements (Minimum-Maximum HP):
35-90 HP
Operating Weight: 958 lbs.
Shipping Weight: 1003 lbs.
Approximate Set-Up Time: 60 Minutes
Chute Deflector Adjustment (Standard):
Manual
Chute Deflector Adjustment Options:
Hydraulic Cylinder (2 In. x 8 In.)
Including Hoses and Tips
Electric Actuator (8 In).
Including Hardware, Switch, and Electric Cable
Chute Rotation (Standard): Must choose an
Option - Manual or Hydraulic
Chute Rotation Options:
Manual, Worm Gear with Crank
Hydraulic: Cylinder (2 In. x 8 In.),
Including Bracket, Hoses, and Tips
Chute: Two Part ONLY
Dual Auger: N/A
Rotating Drum (Including Hoses and Tips):
N/A

CODE	ATTACHMENT IDENTIFIER	DESCRIPTION	SUGGESTED LIST PRICE USD ($)

Select One Code From Each Required Category

BASE MACHINE

380EXF	SB1184 - 84 In. 3-Point Medium Snowblower - Canada	4,954.46

CHUTES

1000	Manual Chute Rotation Kit	In Base Price
1010	Hydraulic Cylinder Kit for Chute Rotation	446.56

ATTACHMENTS - ORDER AS DESIRED

9000	Hydraulic Cylinder Kit for Chute Deflector	304.57
9010	Electric Kit for Chute Deflector *Includes 8 In. actuator.*	832.50

ATTACHMENTS FOR FIELD CONVERSION

SB1184 - 84 In. 3-Point Medium Snowblower - Canada

Continued

CODE	ATTACHMENT IDENTIFIER	DESCRIPTION	SUGGESTED LIST PRICE USD ($)
		ATTACHMENTS FOR FIELD CONVERSION ...Continued...	
		Miscellaneous:	
	5RDF0021	Electric Kit for Chute Deflector - Includes 8 In. Actuator	859.82
	5RDF0009	Hydraulic Cylinder Kit for Chute Deflector	314.56
	5RDF0018	Hydraulic Cylinder Kit for Chute Rotation	553.89
	5RDF0016	Manual Chute Rotation Kit (SB11)	148.93

SB1194 - 94 In. 3-Point Medium Snowblower - Canada

Equipment for Base Machine

Function: Snow Removal
Working Width: 94 In. (2,387.6 mm)
Transport Width: 95.5 In. (2,425.7 mm)
Working Height: 34 In. (863.6 mm)
Length: 55.5 In. (1,409.7 mm)
Single/Dual Auger: Single
Auger Diameter: 20 In. (508 mm)
Auger Flighting Thickness: 3/8 In. (9.5 mm)
Impeller Diameter: 27-1/2 In. (698.5 mm)
Impeller Width: 10.5 In. (266.7 mm)
Impeller Shaft Diameter: 1-9/16 In. (39.7 mm)
Number of Impeller Blades: 4
Roller Chain: 60
Drive Sprocket: 10 Teeth
Driven Sprocket: 32 Teeth
Chain Idler: Manual Adjustment
Gear Box Manufacturer: Comer
Gear Box Description: Model T-27D
Gear Box HP (Through Gears): 55 HP (41 kW)
Gear Box HP (Straight Through): 105 HP (78.3 kW)
Tractor RPM: 540 RPM
Impeller RPM: 540 RPM
Auger RPM: 170 RPM
PTO Manufacturer: Comer
PTO Description: 60
PTO Clutch Setting (Number): 1900 N-m
Shearbolt Bolt Size and Grade (PTO):
M10 6.8 Metric
Shearbolt Bolt Size and Grade (Auger):
5/16 In. 5 SAE
Skid Shoe: Adjustable
Skid Shoe Material: Steel
End Plate Thickness: 3/16 In. (4.8 mm)
Back Plate Thickness: 11 Gauge (3.18 mm)
Impeller Housing Thickness: 11 Gauge (3.18 mm)
Impeller Blade Thickness: 3/8 In. (9.5 mm)
Side Panel Bottom Thickness: 3/16 In. (4.8 mm)
Cutting Edge: Welded
Cutting Edge Dimension: 1/2 In. x 3 In. (12.7 x 76.2 mm)
Chute Diameter: 12 In. (304.8 mm)
Chute Base: Standard
Chute Rotation: 215 Degrees
Parking Stand: Standard
Hitch Category: Category II
Quick Hitch Compatibility:
Quick Coupler Compatible
HP Requirements (Minimum-Maximum HP):
35-90 HP (26.1 kW - 67.1 kW)
Operating Weight: 1,121 lbs. (508.5 kg)
Shipping Weight: 1,166 lbs. (528.9 kg)
Approximate Set-Up Time: 60 Minutes
Chute Deflector Adjustment (Standard):
Manual
Chute Deflector Adjustment Options:
Hydraulic Cylinder (2 In. x 8 In.)
Including Hoses and Tips
Electric Actuator (8 In).
Including Hardware, Switch, and Electric Cable
Chute Rotation (Standard): Must choose an
Option - Manual or Hydraulic
Chute Rotation Options:
Manual, Worm Gear with Crank
Hydraulic: Cylinder (2 In. x 8 In.),
Including Bracket, Hoses, and Tips
Chute: Two Part ONLY
Dual Auger: N/A
Rotating Drum (Including Hoses and Tips):
N/A

CODE	ATTACHMENT IDENTIFIER	DESCRIPTION	SUGGESTED LIST PRICE USD ($)

Select One Code From Each Required Category

BASE MACHINE

380FXF	SB1194 - 94 In. 3-Point Medium Snowblower - Canada	5,140.24

CHUTES

1000	Manual Chute Rotation Kit	In Base Price
1010	Hydraulic Cylinder Kit for Chute Rotation	446.56

ATTACHMENTS - ORDER AS DESIRED

9000	Hydraulic Cylinder Kit for Chute Deflector	304.57
9010	Electric Kit for Chute Deflector *Includes 8 In. actuator.*	832.50

ATTACHMENTS FOR FIELD CONVERSION

SB1194 - 94 In. 3-Point Medium Snowblower - Canada

Continued

CODE	ATTACHMENT IDENTIFIER	DESCRIPTION	SUGGESTED LIST PRICE USD ($)
		ATTACHMENTS FOR FIELD CONVERSION ...Continued...	
		Miscellaneous:	
	5RDF0021	Electric Kit for Chute Deflector - Includes 8 In. Actuator	859.82
	5RDF0009	Hydraulic Cylinder Kit for Chute Deflector	314.56
	5RDF0018	Hydraulic Cylinder Kit for Chute Rotation	553.89
	5RDF0016	Manual Chute Rotation Kit (SB11)	148.93

SB1274 - 74 In. 3-Point Commercial Snowblower with Hydraulic Motor Chute Rotation and Single Auger - Canada

Equipment for Base Machine

Function: Snow Removal
Working Width: 74 In. (1,879.6 mm)
Transport Width: 74.5 In. (1892.3 mm)
Working Height: 30 In. (762 mm)
Single/Dual Auger: Single
Auger Diameter: 20 In. (508 mm)
Auger Flighting Thickness: 3/8 In. (9.53 mm)
Impeller Diameter: 26 In. (660.4 mm)
Impeller Width: 10.5 In. (266.7 mm)
Impeller Shaft Diameter: 1 9/16 In. (39.69 mm)
Number of Impeller Blades: 4
Roller Chain: 60
Drive Sprocket: 10 Teeth
Driven Sprocket: 32 Teeth
Chain Idler: Automatic Adjustment
Gear Box Manufacturer: Comer
Gear Box Description: Model T-27D
Gear Box HP (Through Gears): 55 HP (41 kW)
Gear Box HP (Straight Through): 105 HP (78.3 kW)
Tractor RPM: 540 RPM
Impeller RPM: 540 RPM
Auger RPM: 170 RPM
PTO Manufacturer: Comer
PTO Description: 50
PTO Clutch Setting: 1,700 Nm (1,253.9 lbf-ft)
Shearbolt Bolt Size and Grade (PTO):
M10 8.8 Metric
Shearbolt Bolt Size and Grade (Auger):
5/16 In. 5 SAE
Skid Shoe: Adjustable
Skid Shoe Material: Steel
End Plate Thickness: 3/16 In. (4.8mm)
Back Plate Thickness: 11 Gauge
Impeller Housing Thickness: 3/16 In. (4.8mm)
Impeller Blade Thickness: 5/16 In. (7.9mm)
Side Panel Bottom Thickness: 1/2 In. (12.7 mm)
Cutting Edge: Replacable
Cutting Edge Dimension: 1/2 In. x 3 In. (12.7mm x 76.2 mm) Chute Diameter: 10.5 In. (266.7 mm)
Chute Base: Standard
Chute Rotation: 270 Degrees
Parking Stand: Standard
Hitch Category: Category I & II
Quick Hitch Compatibility:
iMatch & Cat. II Quick Coupler Compatible
HP Requirements (Minimum-Maximum HP):
30-80 HP (22.4-59.7kW)
Operating Weight: 835 lbs. (378.7 kg)
Shipping Weight: 875 lbs. (396.9 kg)
Approximate Set-up Time: 60 Minutes
Chute Deflector Adjustment (Standard): Hydraulic
Cylinder Chute Rotation (Standard): Hydraulic Motor
Chute: Three Part ONLY w/ 2" x 4" cylinder, hoses, and tips Rotating Drum (Including Hoses and Tips):
N/A

CODE	ATTACHMENT IDENTIFIER	DESCRIPTION	SUGGESTED LIST PRICE USD ($)

Select One Code From Each Required Category

BASE MACHINE

383AXF		SB1274 - 74 In. 3-Point Commercial Snowblower with Hydraulic Motor Chute Rotation and Single Auger - Canada *Includes 2" x 4" cylinder, hoses, and tips for chute deflection.*	6,931.98

ATTACHMENTS FOR FIELD CONVERSION

Miscellaneous:

	5RDF0028	Cutting Edge - CHT400 Steel	289.18

SB1274 - 74 In. 3-Point Commercial Snowblower with Hydraulic Motor Chute Rotation and Single Auger - Canada

Continued

THIS PAGE IS INTENTIONALLY LEFT BLANK

SB1280 - 80 In. 3-Point Commercial Snowblower with Hydraulic Motor Chute Rotation and Single Auger - Canada

Equipment for Base Machine

Function: Snow Removal
Working Width: 80 In. (2,032 mm)
Transport Width: 80.5 In. (2,044.7 mm)
Working Height: 30 In. (762 mm)
Single/Dual Auger: Single
Auger Diameter: 20 In. (508 mm)
Auger Flighting Thickness: 3/8 In. (9.53 mm)
Impeller Diameter: 26 In. (660.4 mm)
Impeller Width: 10.5 In. (266.7 mm)
Impeller Shaft Diameter: 1 9/16 In. (39.69 mm)
Number of Impeller Blades: 4
Roller Chain: 60
Drive Sprocket: 10 Teeth
Driven Sprocket: 32 Teeth
Chain Idler: Automatic Adjustment
Gear Box Manufacturer: Comer
Gear Box Description: Model T-27D
Gear Box HP (Through Gears): 55 HP (41 kW)
Gear Box HP (Straight Through): 105 HP (78.3 kW)
Tractor RPM: 540 RPM
Impeller RPM: 540 RPM
Auger RPM: 170 RPM
PTO Manufacturer: Comer
PTO Description: 50
PTO Clutch Setting: 1,700 Nm (1,253.9 lbf-ft)
Shearbolt Bolt Size and Grade (PTO):
M10 8.8 Metric
Shearbolt Bolt Size and Grade (Auger):
5/16 In. 5 SAE
Skid Shoe: Adjustable
Skid Shoe Material: Steel
End Plate Thickness: 3/16 In. (4.8mm)
Back Plate Thickness: 11 Gauge
Impeller Housing Thickness: 3/16 In. (4.8mm)
Impeller Blade Thickness: 5/16 In. (7.9mm)
Side Panel Bottom Thickness: 1/2 In. (12.7 mm)
Cutting Edge: Replacable
Cutting Edge Dimension: 1/2 In. x 3 In. (12.7mm x 76.2 mm) Chute Diameter: 10.5 In. (266.7 mm)
Chute Base: Standard
Chute Rotation: 270 Degrees
Parking Stand: Standard
Hitch Category: Category I & II
Quick Hitch Compatibility:
iMatch & Cat. II Quick Coupler Compatible
HP Requirements (Minimum-Maximum HP):
30-80 HP (22.4-59.7kW)
Operating Weight: 895 lbs. (406 kg)
Shipping Weight: 935 lbs. (424.1 kg)
Approximate Set-up Time: 60 Minutes
Chute Deflector Adjustment (Standard): Hydraulic
Cylinder Chute Rotation (Standard): Hydraulic Motor
Chute: Three Part ONLY w/ 2" x 4" cylinder, hoses, and tips Rotating Drum (Including Hoses and Tips):
N/A

CODE	ATTACHMENT IDENTIFIER	DESCRIPTION	SUGGESTED LIST PRICE USD ($)

Select One Code From Each Required Category

BASE MACHINE

383BXF		SB1280 - 80 In. 3-Point Commercial Snowblower with Hydraulic Motor Chute Rotation and Single Auger - Canada *Includes 2" x 4" cylinder, hoses, and tips for chute deflection.*	7,136.04

ATTACHMENTS FOR FIELD CONVERSION

		Miscellaneous:	
	5RDF0029	Cutting Edge - CHT400 Steel	318.28

SB1280 - 80 In. 3-Point Commercial Snowblower with Hydraulic Motor Chute Rotation and Single Auger - Canada
Continued

THIS PAGE IS INTENTIONALLY LEFT BLANK

SB1308R - 8 Ft. 3-Point Commercial Rotating Drum Snowblower with Hydraulic Motor Chute Rotation and Single Auger - Canada

Equipment for Base Machine

Function: Snow Removal
Working Width: 98 In.
Transport Width: 99 In.
Working Height: 44 In.
Length: 67 In.
Single/Dual Auger: Single/Dual
Auger Diameter: 24 In.
Auger Flighting Thickness: 7/16 In.
Impeller Diameter: 31-1/2 In.
Impeller Width: 14 In.
Impeller Shaft Diameter: 2 In.
Number of Impeller Blades: 6
Roller Chain: 80
Drive Sprocket: 12 Teeth
Driven Sprocket: 34 Teeth
Chain Idler: Automatic Adjustment
Gear Box Manufacturer: Comer
Gear Box Description: Model T-279A
Gear Box HP (Through Gears): 100 HP
Gear Box HP (Straight Through): 185 HP
Tractor RPM: 540/1000 RPM Optional
Impeller RPM: 540 RPM
Auger RPM: 190 RPM
PTO Manufacturer: Comer
PTO Description: 80
PTO Clutch Setting (Number): 3000
Shearbolt Bolt Size and Grade (PTO):
  M10 6.8 Metric
Shearbolt Bolt Size and Grade (Auger):
  5/16 In. 5 SAE
Skid Shoe: Adjustable
Skid Shoe Material: Steel
End Plate Thickness: 5/16 In.
Back Plate Thickness: 10 Gauge
Impeller Housing Thickness: 3/16 In.
Impeller Blade Thickness: 1/2 In.
Side Panel Bottom Thickness: 5/8 In.
Cutting Edge: Bolt-on/Reversible
Cutting Edge Dimension: 1/2 In. x 4 In.
Chute Diameter: 14-7/8 In.
Chute Base: Heavy Duty
Chute Rotation: 270 Degrees
Parking Stand: Standard
Hitch Category: Category II/III
Quick Hitch Compatibility:
  Quick Hitch Compatible
HP Requirements (Minimum-Maximum HP):
  90-180 HP
Operating Weight: 2233 lbs.
Shipping Weight: 2280 lbs.
Approximate Set-Up Time: 100 Minutes
Chute Deflector Adjustment (Standard):
  Manual - Must Choose a Chute Option
Chute Deflector Adjustment Options:
  Hydraulic Cylinder (2 In. x 8 In.)
  Including Hoses and Tips
Chute Rotation (Standard):
  Hydraulic Motor Chute Rotation
  Including Hoses and Tips
Chute Rotation Options: N/A
Chute:
  Two Part, Includes Manual Deflector
  Three Part, Includes Cylinder
    (2 In. x 8 In.), Hoses, and Tips
Dual Auger: 15 In. Diameter Auger
Rotating Drum (Including Hoses and Tips):
  Standard

CODE	ATTACHMENT IDENTIFIER	DESCRIPTION	SUGGESTED LIST PRICE USD ($)
		Select One Code From Each Required Category	
		BASE MACHINE	
381BXF		SB1308R - 8 Ft. 3-Point Commercial Rotating Drum Snowblower with Hydraulic Motor Chute Rotation and Single Auger - Canada	12,293.98
		CHUTES	
1000		2 Part Chute *Includes manual deflector.*	In Base Price
1010		3 Part Chute *Includes cylinders, hoses, and tips.*	565.48
		ATTACHMENTS - ORDER AS DESIRED	
9000		Cutting Edge - CHT400 Steel	275.26
9010		2nd Auger Kit *15 In. diameter.*	1,090.50

SB1308R - 8 Ft. 3-Point Commercial Rotating Drum Snowblower with Hydraulic Motor Chute Rotation and Single Auger - Canada

Continued

CODE	ATTACHMENT IDENTIFIER	DESCRIPTION	SUGGESTED LIST PRICE USD ($)
		ATTACHMENTS - ORDER AS DESIRED ...Continued...	
9020		Drift Cutters	353.89
9030		Hydraulic Cylinder Kit for Chute Deflector	304.57
9040		Reducer 1000 to 540 RPM for 13 Series Snowblowers, Models (SB1392, SB1308, SB1309) *Bundle Number 5RDF0023 is needed to complete kit.*	3,125.32
9050		Quick Disconnect Yoke Series 08, 1-3/4 In., 20 Splines for Series 13 Snowblowers, Models (SB1392, SB1308, SB1309) *Bundle Number 5RDF0022 is needed to complete kit.*	259.03
		ATTACHMENTS FOR FIELD CONVERSION	
		Miscellaneous:	
	5RDF0007	2nd Auger Kit - 15 In. Diameter	1,126.28
	5RDF0003	Cutting Edge - CHT400 Steel	226.83
	5RDF0015	Drift Cutters	468.45
	5RDF0009	Hydraulic Cylinder Kit for Chute Deflector	314.56
	5RDF0023	Quick disconnect Yoke series 08, 1-3/4", 20 splines for series 13 snowblowers, models (SB1392, SB1308, and SB1309) *Bundle Number 5RDF0022 is needed to complete kit.*	267.52
	5RDF0022	Reducer 1000 to 540 RPM for 13 series snowblowers, models (SB1392, SB1308, and SB1309) *Bundle Number 5RDF0023 is needed to complete kit.*	3,227.88

SB1308 - 8 Ft. 3-Point Commercial Snowblower with Hydraulic Motor Chute Rotation and Single Auger - Canada

Equipment for Base Machine

Function: Snow Removal
Working Width: 98 In.
Transport Width: 99 In.
Working Height: 44 In.
Length: 65.5 In.
Single/Dual Auger: Single/Dual
Auger Diameter: 24 In.
Auger Flighting Thickness: 7/16 In.
Impeller Diameter: 31-1/2 In.
Impeller Width: 14 In.
Impeller Shaft Diameter: 2 In.
Number of Impeller Blades: 6
Roller Chain: 80
Drive Sprocket: 12 Teeth
Driven Sprocket: 34 Teeth
Chain Idler: Automatic Adjustment
Gear Box Manufacturer: Comer
Gear Box Description: Model T-279A
Gear Box HP (Through Gears): 100 HP
Gear Box HP (Straight Through): 185 HP
Tractor RPM: 540/1000 RPM Optional
Impeller RPM: 540 RPM
Auger RPM: 190 RPM
PTO Manufacturer: Comer
PTO Description: 80
PTO Clutch Setting (Number): 3000
Shearbolt Bolt Size and Grade (PTO):
  M10 6.8 Metric
Shearbolt Bolt Size and Grade (Auger):
  5/16 In. 5 SAE
Skid Shoe: Adjustable
Skid Shoe Material: Steel
End Plate Thickness: 5/16 In.
Back Plate Thickness: 10 Gauge
Impeller Housing Thickness: 1/4 In.
Impeller Blade Thickness: 1/2 In.
Side Panel Bottom Thickness: 3/4 In.
Cutting Edge: Bolt-on/Reversible
Cutting Edge Dimension: 1/2 In. x 5 In.
Chute Diameter: 14-7/8 In.
Chute Base: Heavy Duty
Chute Rotation: 270 Degrees
Parking Stand: Standard
Hitch Category: Category II/III
Quick Hitch Compatibility:
  Quick Hitch Compatible
HP Requirements (Minimum-Maximum HP):
  90-180 HP
Operating Weight: 2160 lbs.
Shipping Weight: 2205 lbs.
Approximate Set-Up Time: 100 Minutes
Chute Deflector Adjustment (Standard):
  Manual - Must Choose a Chute Option
Chute Deflector Adjustment Options:
  Hydraulic Cylinder (2 In. x 8 In.)
  Including Hoses and Tips
Chute Rotation (Standard):
  Hydraulic Motor Chute Rotation
  Including Hoses and Tips
Chute Rotation Options: N/A
Chute:
  Two Part, Includes Manual Deflector
  Three Part, Includes Cylinder
    (2 In. x 8 In.), Hoses and Tips
Dual Auger: 15 In. Diameter Auger
Rotating Drum (Including Hoses and Tips):
  N/A

CODE	ATTACHMENT IDENTIFIER	DESCRIPTION	SUGGESTED LIST PRICE USD ($)

Select One Code From Each Required Category

BASE MACHINE

381AXF	SB1308 - 8 Ft. 3-Point Commercial Snowblower with Hydraulic Motor Chute Rotation and Single Auger - Canada	10,584.85

CHUTES

1000	2 Part Chute *Includes manual deflector.*	In Base Price
1010	3 Part Chute *Includes cylinders, hoses, and tips.*	565.48

ATTACHMENTS - ORDER AS DESIRED

9000	Cutting Edge - CHT400 Steel	275.26
9010	2nd Auger Kit *15 In. diameter.*	1,090.50

SB1308 - 8 Ft. 3-Point Commercial Snowblower with Hydraulic Motor Chute Rotation and Single Auger - Canada

Continued

CODE	ATTACHMENT IDENTIFIER	DESCRIPTION	SUGGESTED LIST PRICE USD ($)
		ATTACHMENTS - ORDER AS DESIRED ...Continued...	
9020		Drift Cutters	353.89
9030		Hydraulic Cylinder Kit for Chute Deflector	304.57
9040		Reducer 1000 to 540 RPM for 13 Series Snowblowers, Models (SB1392, SB1308, SB1309) *Bundle Number 5RDF0023 is needed to complete kit.*	3,125.32
9050		Quick Disconnect Yoke Series 08, 1-3/4 In., 20 Splines for Series 13 Snowblowers, Models (SB1392, SB1308, SB1309) *Bundle Number 5RDF0022 is needed to complete kit.*	259.03
		ATTACHMENTS FOR FIELD CONVERSION	
		Miscellaneous:	
	5RDF0007	2nd Auger Kit - 15 In. Diameter	1,126.28
	5RDF0003	Cutting Edge - CHT400 Steel	226.83
	5RDF0015	Drift Cutters	468.45
	5RDF0009	Hydraulic Cylinder Kit for Chute Deflector	314.56
	5RDF0023	Quick disconnect Yoke series 08, 1-3/4", 20 splines for series 13 snowblowers, models (SB1392, SB1308, and SB1309) *Bundle Number 5RDF0022 is needed to complete kit.*	267.52
	5RDF0022	Reducer 1000 to 540 RPM for 13 series snowblowers, models (SB1392, SB1308, and SB1309) *Bundle Number 5RDF0023 is needed to complete kit.*	3,227.88

SB1309R - 9 Ft. 3-Point Commercial Rotating Drum Snowblower with Hydraulic Motor Chute Rotation and Single Auger - Canada

Equipment for Base Machine

Function: Snow Removal
Working Width: 104 In.
Transport Width: 105 In.
Working Height: 44 In.
Length: 67 In.
Single/Dual Auger: Single/Dual
Auger Diameter: 24 In.
Auger Flighting Thickness: 7/16 In.
Impeller Diameter: 31-1/2 In.
Impeller Width: 14 In.
Impeller Shaft Diameter: 2 In.
Number of Impeller Blades: 6
Roller Chain: 80
Drive Sprocket: 12 Teeth
Driven Sprocket: 34 Teeth
Chain Idler: Automatic Adjustment
Gear Box Manufacturer: Comer
Gear Box Description: Model T-279A
Gear Box HP (Through Gears): 100 HP
Gear Box HP (Straight Through): 185 HP
Tractor RPM: 540/1000 RPM
Impeller RPM: 540 RPM
Auger RPM: 190 RPM
PTO Manufacturer: Comer
PTO Description: 80
PTO Clutch Setting (Number): 3000
Shearbolt Bolt Size and Grade (PTO):
  M10 6.8 Metric
Shearbolt Bolt Size and Grade (Auger):
  5/16 In. 5 SAE
Skid Shoe: Adjustable
Skid Shoe Material: Steel
End Plate Thickness: 5/16 In.
Back Plate Thickness: 10 Gauge
Impeller Housing Thickness: 3/16 In.
Impeller Blade Thickness: 1/2 In.
Side Panel Bottom Thickness: 5/8 In.
Cutting Edge: Bolt-on/Reversible
Cutting Edge Dimension: 1/2 In. x 4 In.
Chute Diameter: 14-7/8 In.
Chute Base: Heavy Duty
Chute Rotation: 270 Degrees
Parking Stand: Standard
Hitch Category: Category II/III
Quick Hitch Compatibility:
  Quick Hitch Compatible
HP Requirements (Minimum-Maximum HP):
  90-180 HP
Operating Weight: 2336 lbs.
Shipping Weight: 2385 lbs.
Approximate Set-Up Time: 100 Minutes
Chute Deflector Adjustment (Standard):
  Manual - Must Choose a Chute Option
Chute Deflector Adjustment Options:
  Hydraulic Cylinder (2 In. x 8 In.)
  Including Hoses and Tips
Chute Rotation (Standard):
  Hydraulic Motor Chute Rotation
  Including Hoses and Tips
Chute Rotation Options: N/A
Chute:
  Two Part, Includes Manual Deflector
  Three Part, Includes Cylinder
    (2 In. x 8 In.), Hoses and Tips
Dual Auger: 15 In. Diameter Auger
Rotating Drum (Including Hoses and Tips):
  Standard

CODE	ATTACHMENT IDENTIFIER	DESCRIPTION	SUGGESTED LIST PRICE USD ($)
		Select One Code From Each Required Category	
		BASE MACHINE	
381CXF		SB1309R - 9 Ft. 3-Point Commercial Rotating Drum Snowblower with Hydraulic Motor Chute Rotation and Single Auger - Canada	12,587.42
		CHUTES	
1000		2 Part Chute *Includes manual deflector.*	In Base Price
1010		3 Part Chute *Includes cylinders, hoses, and tips.*	565.48
		ATTACHMENTS - ORDER AS DESIRED	
9000		Cutting Edge - CHT400 Steel	322.40
9010		2nd Auger Kit *15 In. diameter.*	1,210.15

SB1309R - 9 Ft. 3-Point Commercial Rotating Drum Snowblower with Hydraulic Motor Chute Rotation and Single Auger - Canada

Continued

CODE	ATTACHMENT IDENTIFIER	DESCRIPTION	SUGGESTED LIST PRICE USD ($)
		ATTACHMENTS - ORDER AS DESIRED ...Continued...	
9020		Drift Cutters	353.89
9030		Hydraulic Cylinder Kit for Chute Deflector	304.57
9040		Reducer 1000 to 540 RPM for 13 Series Snowblowers, Models (SB1392, SB1308, SB1309) *Bundle Number 5RDF0023 is needed to complete kit.*	3,125.32
9050		Quick Disconnect Yoke Series 08, 1-3/4 In., 20 Splines for Series 13 Snowblowers, Models (SB1392, SB1308, SB1309) *Bundle Number 5RDF0022 is needed to complete kit.*	259.03
		ATTACHMENTS FOR FIELD CONVERSION	
		Miscellaneous:	
	5RDF0008	2nd Auger Kit - 15 In. Diameter	1,248.73
	5RDF0004	Cutting Edge - CHT400 Steel	275.71
	5RDF0015	Drift Cutters	468.45
	5RDF0009	Hydraulic Cylinder Kit for Chute Deflector	314.56
	5RDF0023	Quick disconnect Yoke series 08, 1-3/4", 20 splines for series 13 snowblowers, models (SB1392, SB1308, and SB1309) *Bundle Number 5RDF0022 is needed to complete kit.*	267.52
	5RDF0022	Reducer 1000 to 540 RPM for 13 series snowblowers, models (SB1392, SB1308, and SB1309) *Bundle Number 5RDF0023 is needed to complete kit.*	3,227.88

SB1388R - 88 In. 3-Point Commercial Rotating Drum Snowblower with Hydraulic Motor Chute Rotation and Single Auger - Canada

Equipment for Base Machine

Function: Snow Removal
Working Width: 88 In.
Transport Width: 88.5 In.
Working Height: 40 In.
Length: 62.5 In.
Single/Dual Auger: Single/Dual
Auger Diameter: 22 In.
Auger Flighting Thickness: 7/16 In.
Impeller Diameter: 28-1/2 In.
Impeller Width: 12 In.
Impeller Shaft Diameter: 1-9/16 In.
Number of Impeller Blades: 5
Roller Chain: 80
Drive Sprocket: 11 Teeth
Driven Sprocket: 34 Teeth
Chain Idler: Automatic Adjustment
Gear Box Manufacturer: Comer
Gear Box Description: Model T-27D
Gear Box HP (Through Gears): 55 HP
Gear Box HP (Straight Through): 105 HP
Tractor RPM: 540 RPM
Impeller RPM: 540 RPM
Auger RPM: 175 RPM
PTO Manufacturer: Comer
PTO Description: 60
PTO Clutch Setting (Number): 1900
Shearbolt Bolt Size and Grade (PTO):
M10 6.8 Metric
Shearbolt Bolt Size and Grade (Auger):
5/16 In. 5 SAE
Skid Shoe: Adjustable
Skid Shoe Material: Steel
End Plate Thickness: 1/4 In.
Back Plate Thickness: 11 Gauge
Impeller Housing Thickness: 3/16 In.
Impeller Blade Thickness: 3/8 In.
Side Panel Bottom Thickness: 5/8 In.
Cutting Edge: Bolt-on/Reversible
Cutting Edge Dimension: 1/2 In. x 4 In.
Chute Diameter: 12 3/4 In.
Chute Base: Heavy Duty
Chute Rotation: 270 Degrees
Parking Stand: Standard
Hitch Category: Category II
Quick Hitch Compatibility:
Quick Coupler Compatible
HP Requirements (Minimum-Maximum HP):
45-95 HP
Operating Weight: 1670 lbs.
Shipping Weight: 1715 lbs.
Approximate Set-Up Time: 90 Minutes
Chute Deflector Adjustment (Standard):
Manual - Must Choose a Chute Option
Chute Deflector Adjustment Options:
Hydraulic Cylinder (2 In. x 8 In.)
Including Hoses and Tips
Chute Rotation (Standard):
Hydraulic Motor Chute Rotation
Including Hoses and Tips
Chute Rotation Options: N/A
Chute:
Two Part, Includes Manual Deflector
Three Part, Includes Cylinder
(2 In. x 8 In.), Hoses and Tips
Dual Auger: 14 In. Diameter Auger
Rotating Drum (Including Hoses and Tips):
Standard

CODE	ATTACHMENT IDENTIFIER	DESCRIPTION	SUGGESTED LIST PRICE USD ($)

Select One Code From Each Required Category

BASE MACHINE

381EXF	SB1388R - 88 In. 3-Point Commercial Rotating Drum Snowblower with Hydraulic Motor Chute Rotation and Single Auger - Canada	9,677.68

CHUTES

1000	2 Part Chute *Includes manual deflector.*	In Base Price
1010	3 Part Chute *Includes cylinders, hoses, and tips.*	617.26

ATTACHMENTS - ORDER AS DESIRED

9000	Cutting Edge - CHT400 Steel	261.03
9010	2nd Auger Kit *14 In. diameter.*	946.61

SB1388R - 88 In. 3-Point Commercial Rotating Drum Snowblower with Hydraulic Motor Chute Rotation and Single Auger - Canada

Continued

CODE	ATTACHMENT IDENTIFIER	DESCRIPTION	SUGGESTED LIST PRICE USD ($)
		ATTACHMENTS - ORDER AS DESIRED ...Continued...	
9020		Drift Cutters	426.40
9030		Hydraulic Cylinder Kit for Chute Deflector	304.57
		ATTACHMENTS FOR FIELD CONVERSION	
		Miscellaneous:	
	5RDF0005	2nd Auger Kit - 14 In. Diameter	977.67
	5RDF0001	Cutting Edge - CHT400 Steel	213.52
	5RDF0014	Drift Cutters	440.17
	5RDF0009	Hydraulic Cylinder Kit for Chute Deflector	314.56

SB1388 - 88 In. 3-Point Commercial Snowblower with Hydraulic Motor Chute Rotation and Single Auger - Canada

Equipment for Base Machine

Function: Snow Removal
Working Width: 88 In.
Transport Width: 88.5 In.
Working Height: 40 In.
Length: 61 In.
Single/Dual Auger: Single/Dual
Auger Diameter: 22 In.
Auger Flighting Thickness: 7/16 In.
Impeller Diameter: 28-1/2 In.
Impeller Width: 12 In.
Impeller Shaft Diameter: 1-9/16 In.
Number of Impeller Blades: 5
Roller Chain: 80
Drive Sprocket: 11 Teeth
Driven Sprocket: 34 Teeth
Chain Idler: Automatic Adjustment
Gear Box Manufacturer: Comer
Gear Box Description: Model T-27D
Gear Box HP (Through Gears): 55 HP
Gear Box HP (Straight Through): 105 HP
Tractor RPM: 540 RPM
Impeller RPM: 540 RPM
Auger RPM: 175 RPM
PTO Manufacturer: Comer
PTO Description: 60
PTO Clutch Setting (Number): 1900
Shearbolt Bolt Size and Grade (PTO):
  M10 6.8 Metric
Shearbolt Bolt Size and Grade (Auger):
  5/16 In. 5 SAE
Skid Shoe: Adjustable
Skid Shoe Material: Steel
End Plate Thickness: 1/4 In.
Back Plate Thickness: 11 Gauge
Impeller Housing Thickness: 1/4 In.
Impeller Blade Thickness: 3/8 In.
Side Panel Bottom Thickness: 5/8 In.
Cutting Edge: Bolt-on/Reversible
Cutting Edge Dimension: 1/2 In. x 4 In.
Chute Diameter: 12-3/4 In.
Chute Base: Heavy Duty
Chute Rotation: 270 Degrees
Parking Stand: Standard
Hitch Category: Category II
Quick Hitch Compatibility:
  Quick Coupler Compatible
HP Requirements (Minimum-Maximum HP):
  45-95 HP
Operating Weight: 1552 lbs.
Shipping Weight: 1597 lbs.
Approximate Set-Up Time: 90 Minutes
Chute Deflector Adjustment (Standard):
  Manual - Must Choose a Chute Option
Chute Deflector Adjustment Options:
  Hydraulic Cylinder (2 In. x 8 In.)
  Including Hoses and Tips
Chute Rotation (Standard):
  Hydraulic Motor Chute Rotation
  Including Hoses and Tips
Chute Rotation Options: N/A
Chute:
  Two Part, Includes Manual Deflector
  Three Part, Includes Cylinder
    (2 In. x 8 In.), Hoses and Tips
Dual Auger: 14 In. Diameter Auger
Rotating Drum (Including Hoses and Tips):
  N/A

CODE	ATTACHMENT IDENTIFIER	DESCRIPTION	SUGGESTED LIST PRICE USD ($)

Select One Code From Each Required Category

BASE MACHINE

381DXF	SB1388 - 88 In. 3-Point Commercial Snowblower with Hydraulic Motor Chute Rotation and Single Auger - Canada	8,252.76

CHUTES

1000	2 Part Chute *Includes manual deflector.*	In Base Price
1010	3 Part Chute *Includes cylinders, hoses, and tips.*	617.26

ATTACHMENTS - ORDER AS DESIRED

9000	Cutting Edge - CHT400 Steel	261.03
9010	2nd Auger Kit *14 In. diameter.*	946.61

SB1388 - 88 In. 3-Point Commercial Snowblower with Hydraulic Motor Chute Rotation and Single Auger - Canada

Continued

CODE	ATTACHMENT IDENTIFIER	DESCRIPTION	SUGGESTED LIST PRICE USD ($)
		ATTACHMENTS - ORDER AS DESIRED ...Continued...	
9020		Drift Cutters	426.40
9030		Hydraulic Cylinder Kit for Chute Deflector	304.57
		ATTACHMENTS FOR FIELD CONVERSION	
		Miscellaneous:	
	5RDF0005	2nd Auger Kit - 14 In. Diameter	977.67
	5RDF0001	Cutting Edge - CHT400 Steel	213.52
	5RDF0014	Drift Cutters	440.17
	5RDF0009	Hydraulic Cylinder Kit for Chute Deflector	314.56

SB1392R - 92 In. 3-Point Commercial Rotating Drum Snowblower with Hydraulic Motor Chute Rotation and Single Auger - Canada

Equipment for Base Machine

Function: Snow Removal
Working Width: 92 In.
Transport Width: 93 In.
Working Height: 44 In.
Length: 67 In.
Single/Dual Auger: Single/Dual
Auger Diameter: 24 In.
Auger Flighting Thickness: 7/16 In.
Impeller Diameter: 31-1/2 In.
Impeller Width: 14 In.
Impeller Shaft Diameter: 2 In.
Number of Impeller Blades: 6
Roller Chain: 80
Drive Sprocket: 12 Teeth
Driven Sprocket: 34 Teeth
Chain Idler: Automatic Adjustment
Gear Box Manufacturer: Comer
Gear Box Description: Model T-279A
Gear Box HP (Through Gears): 100 HP
Gear Box HP (Straight Through): 185 HP
Tractor RPM: 540/1000 RPM
Impeller RPM: 540 RPM
Auger RPM: 190 RPM
PTO Manufacturer: Comer
PTO Description: 80
PTO Clutch Setting (Number): 3000
Shearbolt Bolt Size and Grade (PTO):
  M10 6.8 Metric
Shearbolt Bolt Size and Grade (Auger):
  5/16 In. 5 SAE
Skid Shoe: Adjustable
Skid Shoe Material: Steel
End Plate Thickness: 5/16 In.
Back Plate Thickness: 10 Gauge
Impeller Housing Thickness: 3/16 In.
Impeller Blade Thickness: 1/2 In.
Side Panel Bottom Thickness: 5/8 In.
Cutting Edge: Bolt-on/Reversible
Cutting Edge Dimension: 1/2 In. x 4 In.
Chute Diameter: 14-7/8 In.
Chute Base: Heavy Duty
Chute Rotation: 270 Degrees
Parking Stand: Standard
Hitch Category: Category II
Quick Hitch Compatibility:
  Quick Coupler Compatible
HP Requirements (Minimum-Maximum HP):
  75-125 HP
Operating Weight: 2183 lbs.
Shipping Weight: 2230 lbs.
Approximate Set-Up Time: 100 Minutes
Chute Deflector Adjustment (Standard):
  Manual - Must Choose a Chute Option
Chute Deflector Adjustment Options:
  Hydraulic Cylinder (2 In. x 8 In.)
  Including Hoses and Tips
Chute Rotation (Standard):
  Hydraulic Motor Chute Rotation
  Including Hoses and Tips
Chute Rotation Options: N/A
Chute:
  Two Part, Includes Manual Deflector
  Three Part, Includes Cylinder
    (2 In. x 8 In.), Hoses, and Tips
Dual Auger: 15 In. Diameter Auger
Rotating Drum (Including Hoses and Tips):
  Standard

CODE	ATTACHMENT IDENTIFIER	DESCRIPTION	SUGGESTED LIST PRICE USD ($)
		Select One Code From Each Required Category	
		BASE MACHINE	
381GXF		SB1392R - 92 In. 3-Point Commercial Rotating Drum Snowblower with Hydraulic Motor Chute Rotation and Single Auger - Canada	11,759.59
		CHUTES	
1000		2 Part Chute *Includes manual deflector.*	In Base Price
1010		3 Part Chute *Includes cylinders, hoses, and tips.*	565.48
		ATTACHMENTS - ORDER AS DESIRED	
9000		Cutting Edge - CHT400 Steel	261.03
9010		2nd Auger Kit *15 In. diameter.*	1,050.76

SB1392R - 92 In. 3-Point Commercial Rotating Drum Snowblower with Hydraulic Motor Chute Rotation and Single Auger - Canada

Continued

CODE	ATTACHMENT IDENTIFIER	DESCRIPTION	SUGGESTED LIST PRICE USD ($)
		ATTACHMENTS - ORDER AS DESIRED ...Continued...	
9020		Drift Cutters	353.89
9030		Hydraulic Cylinder Kit for Chute Deflector	304.57
9040		Reducer 1000 to 540 RPM for 13 Series Snowblowers, Models (SB1392, SB1308, SB1309) *Bundle Number 5RDF0023 is needed to complete kit.*	3,125.32
9050		Quick Disconnect Yoke Series 08, 1-3/4 In., 20 Splines for Series 13 Snowblowers, Models (SB1392, SB1308, SB1309) *Bundle Number 5RDF0022 is needed to complete kit.*	259.03
		ATTACHMENTS FOR FIELD CONVERSION	
		Miscellaneous:	
	5RDF0006	2nd Auger Kit - 15 In. Diameter	1,084.99
	5RDF0002	Cutting Edge - CHT400 Steel	213.52
	5RDF0015	Drift Cutters	468.45
	5RDF0009	Hydraulic Cylinder Kit for Chute Deflector	314.56
	5RDF0023	Quick disconnect Yoke series 08, 1-3/4", 20 splines for series 13 snowblowers, models (SB1392, SB1308, and SB1309) *Bundle Number 5RDF0022 is needed to complete kit.*	267.52
	5RDF0022	Reducer 1000 to 540 RPM for 13 series snowblowers, models (SB1392, SB1308, and SB1309) *Bundle Number 5RDF0023 is needed to complete kit.*	3,227.88

SB1392 - 92 In. 3-Point Commercial Snowblower with Hydraulic Motor Chute Rotation and Single Auger - Canada

Equipment for Base Machine

Function: Snow Removal
Working Width: 92 In.
Transport Width: 93 In.
Working Height: 44 In.
Length: 65.5 In.
Single/Dual Auger: Single/Dual
Auger Diameter: 24 In.
Auger Flighting Thickness: 7/16 In.
Impeller Diameter: 31-1/2 In.
Impeller Width: 14 In.
Impeller Shaft Diameter: 2 In.
Number of Impeller Blades: 6
Roller Chain: 80
Drive Sprocket: 12 Teeth
Driven Sprocket: 34 Teeth
Chain Idler: Automatic Adjustment
Gear Box Manufacturer: Comer
Gear Box Description: Model T-279A
Gear Box HP (Through Gears): 100 HP
Gear Box HP (Straight Through): 185 HP
Tractor RPM: 540/1000 RPM
Impeller RPM: 540 RPM
Auger RPM: 190 RPM
PTO Manufacturer: Comer
PTO Description: 80
PTO Clutch Setting (Number): 3000
Shearbolt Bolt Size and Grade (PTO):
  M10 6.8 Metric
Shearbolt Bolt Size and Grade (Auger):
  5/16 In. 5 SAE
Skid Shoe: Adjustable
Skid Shoe Material: Steel
End Plate Thickness: 5/16 In.
Back Plate Thickness: 10 Gauge
Impeller Housing Thickness: 1/4 In.
Impeller Blade Thickness: 1/2 In.
Side Panel Bottom Thickness: 3/4 In.
Cutting Edge: Bolt-on/Reversible
Cutting Edge Dimension: 1/2 In. x 5 In.
Chute Diameter: 14-7/8 In.
Chute Base: Heavy Duty
Chute Rotation: 270 Degrees
Parking Stand: Standard
Hitch Category: Category II
Quick Hitch Compatibility:
  Quick Coupler Compatible
HP Requirements (Minimum-Maximum HP):
  75-125 HP
Operating Weight: 2044 lbs.
Shipping Weight: 2100 lbs.
Approximate Set-Up Time: 100 Minutes
Chute Deflector Adjustment (Standard):
  Manual - Must Choose a Chute Option
Chute Deflector Adjustment Options:
  Hydraulic Cylinder (2 In. x 8 In.)
  Including Hoses and Tips
Chute Rotation (Standard):
  Hydraulic Motor Chute Rotation
  Including Hoses and Tips
Chute Rotation Options: N/A
Chute:
  Two Part, Includes Manual Deflector
  Three Part, Includes Cylinder
    (2 In. x 8 In.), Hoses and Tips
Dual Auger: 15 In. Diameter Auger
Rotating Drum (Including Hoses and Tips):
  N/A

CODE	ATTACHMENT IDENTIFIER	DESCRIPTION	SUGGESTED LIST PRICE USD ($)

Select One Code From Each Required Category

BASE MACHINE

381FXF	SB1392 - 92 In. 3-Point Commercial Snowblower with Hydraulic Motor Chute Rotation and Single Auger - Canada	10,158.38

CHUTES

1000	2 Part Chute *Includes manual deflector.*	In Base Price
1010	3 Part Chute *Includes cylinders, hoses, and tips.*	565.48

ATTACHMENTS - ORDER AS DESIRED

9000	Cutting Edge - CHT400 Steel	261.03
9010	2nd Auger Kit *15 In. diameter.*	1,050.76

SB1392 - 92 In. 3-Point Commercial Snowblower with Hydraulic Motor Chute Rotation and Single Auger - Canada

Continued

CODE	ATTACHMENT IDENTIFIER	DESCRIPTION	SUGGESTED LIST PRICE USD ($)
		ATTACHMENTS - ORDER AS DESIRED ...Continued...	
9020		Drift Cutters	353.89
9030		Hydraulic Cylinder Kit for Chute Deflector	304.57
9040		Reducer 1000 to 540 RPM for 13 Series Snowblowers, Models (SB1392, SB1308, SB1309) *Bundle Number 5RDF0023 is needed to complete kit.*	3,125.32
9050		Quick Disconnect Yoke Series 08, 1-3/4 In., 20 Splines for Series 13 Snowblowers, Models (SB1392, SB1308, SB1309) *Bundle Number 5RDF0022 is needed to complete kit.*	259.03
		ATTACHMENTS FOR FIELD CONVERSION	
		Miscellaneous:	
	5RDF0006	2nd Auger Kit - 15 In. Diameter	1,084.99
	5RDF0002	Cutting Edge - CHT400 Steel	213.52
	5RDF0015	Drift Cutters	468.45
	5RDF0009	Hydraulic Cylinder Kit for Chute Deflector	314.56
	5RDF0023	Quick disconnect Yoke series 08, 1-3/4", 20 splines for series 13 snowblowers, models (SB1392, SB1308, and SB1309) *Bundle Number 5RDF0022 is needed to complete kit.*	267.52
	5RDF0022	Reducer 1000 to 540 RPM for 13 series snowblowers, models (SB1392, SB1308, and SB1309) *Bundle Number 5RDF0023 is needed to complete kit.*	3,227.88

SB2164 - 64 In. Hydraulic, 300 Series Carrier Loader Mount Snowblower with Hydraulic Chute Rotation and HP2025 Hydraulic Power Unit- Canada

Equipment for Base Machine

Function: Snow Removal
Working Width: 64 In. (1,625.6 mm)
Transport Width: 64 In. (1,625.6 mm)
Working Height: 27 In. (685.8 mm)
Single/Dual Auger: Single
Auger Diameter: 15 In.
Auger Flighting Thickness: 5/16 In. (8 mm)
Impeller Diameter: 24 In. (609.6 mm)
Impeller Width: 7 In. (177.8 mm)
Impeller Shaft Diameter: 1.25 In. (31.75 mm)
Number of Impeller Blades: 4
Auger Drive: Hydraulic
Impeller Drive: Hydraulic
Impeller RPM: 680 RPM
Auger RPM: 200 RPM
Skid Shoe: Adjustable
Skid Shoe Material: Steel
End Plate Thickness: 3/16 In. (4.8 mm)
Back Plate Thickness: 11 Gauge (3.18 mm)
Impeller Housing Thickness: 3/16 In. (4.8 mm)
Impeller Blade Thickness: 1/4 In. (6.4 mm)
Side Panel Bottom Thickness: 1/2 In. (12.7 mm)
Cutting Edge: Replaceable
Cutting Edge Dimension: 3/8 In. x 2 In. (9.5 mm x 50.8 mm)
Chute Diameter: 8.25 In. (209.6 mm)
Chute Base: Standard
Chute Rotation: 270 Degrees
Operating Weight: 760 lbs. (344.7 kg)
Shipping Weight: 840 lbs. (381 kg)
Approximate Set-Up Time: 120 Minutes
Chute Deflector Adjustment (Standard):
Must Choose an option Manual Tie Rod or Hydraulic Cylinder
Chute Deflector Adjustment Options:
Electric Solenoid Valve, Switch, and Hydraulic Cylinder
Chute: Two Part ONLY
Dual Auger: N/A
Rotating Drum (Including Hoses and Tips):
N/A
Function: Hydraulic Power Unit
Pressure: 2700 psi
Flow: 16 gpm
Reservoir Capacity: 15 gal.
System Capacity: 17 gal.
System Features: Pressure relieve valve, filter, temperature
and oil level gauge, and thermal protection switch
Hoses, Tips, and Brackets included
Tractor RPM: 540 RPM
PTO Manufacturer: Comer
Parking Stand: Standard
Hitch Category: Category I
Quick Hitch Compatibility:
iMatch Compatible
Approximate Set-Up Time: 120 Minutes

CODE	ATTACHMENT IDENTIFIER	DESCRIPTION	SUGGESTED LIST PRICE USD ($)
		Select One Code From Each Required Category	
		BASE MACHINE	
382BXF		SB2164 - 64 In. Hydraulic, 300 Series Carrier Loader Mount Snowblower with Hydraulic Chute Rotation and HP2025 Hydraulic Power Unit- Canada *Must only be used with HP2025 Hydraulic Power Unit.*	12,653.81
		HYDRAULIC POWER UNITS	
1000		HP2025 - Hydraulic Power Unit, 25 HP *Includes wiring harness to control the loader mounted implement.*	In Base Price
1095		Less HP2025 Hydraulic Power Unit	-6,400.00
		OIL COOLER	
2000		Oil Cooler for HP2025 and HP2134 Hydraulic Power Units *Includes high efficiency oil cooler, electric fan, bolted support, hoses, fittings and installation instructions. Recommended for application generating high heat.* *Not available with option Code 1095.*	In Base Price
2095		Less Oil Cooler	-1,685.28

SB2164 - 64 In. Hydraulic, 300 Series Carrier Loader Mount Snowblower with Hydraulic Chute Rotation and HP2025 Hydraulic Power Unit- Canada

Continued

CODE	ATTACHMENT IDENTIFIER	DESCRIPTION	SUGGESTED LIST PRICE USD ($)
		CHUTES	
3000		SB21 Manual Chute Deflection *Includes manual deflector.*	In Base Price
3010		SB2164 Hydraulic Chute Deflection *Includes cylinders, hoses and fittings.*	593.91
		ATTACHMENTS - ORDER AS DESIRED	
9020		Drift Cutters (SB21)	142.13
9040		Additional Wiring Harness for HP2025 and HP2134 Hydraulic Power Units for Open Operator Station Tractors *Includes complete wiring harness from battery to switch in the console.* *Not available with option Code 1095.*	93.40
		ATTACHMENTS FOR FIELD CONVERSION	
		Miscellaneous:	
	5RDF0038	Additional Wiring Harness for HP2025 and HP2134 Hydraulic Power Units for Open Operator Station Tractors *Includes complete wiring harness from battery to switch in the console.*	100.04
	5RDF0026	Drift Cutters (SB21)	152.23
	5RDF0027	Kit for Hydraulic Chute Deflector (SB2164)	640.71
	5RDF0036	Oil Cooler for HP2025 and HP2134 Hydraulic Power Units *Includes high efficiency oil cooler, electric fan, bolted support, hoses, fittings and installation instructions. Recommended for application generating high heat.*	1,816.59
	5RDF0039	Wiring Harness for HP2025 and HP2134 Hydraulic Power Units to control Loader Mounted Attachment *Includes complete wiring harness from switch in the console to 3 cavities connectors for front implements.*	88.55

SB2176 - 76 In. Hydraulic, 400 Series Carrier Loader Mount Snowblower with Hydraulic Chute Rotation and HP2134 Hydraulic Power Unit - Canada

Equipment for Base Machine

Function: Snow Removal
Working Width: 64 In. (1,625.6 mm)
Transport Width: 64 In. (1,625.6 mm)
Working Height: 27 In. (685.8 mm)
Single/Dual Auger: Single
Auger Diameter: 15 In.
Auger Flighting Thickness: 5/16 In. (8 mm)
Impeller Diameter: 24 In. (609.6 mm)
Impeller Width: 7 In. (177.8 mm)
Impeller Shaft Diameter: 1.25 In. (31.75 mm)
Number of Impeller Blades: 4
Auger Drive: Hydraulic
Impeller Drive: Hydraulic
Impeller RPM: 680 RPM
Auger RPM: 200 RPM
Skid Shoe: Adjustable
Skid Shoe Material: Steel
End Plate Thickness: 3/16 In. (4.8 mm)
Back Plate Thickness: 11 Gauge (3.18 mm)
Impeller Housing Thickness: 3/16 In. (4.8 mm)
Impeller Blade Thickness: 1/4 In. (6.4 mm)
Side Panel Bottom Thickness: 1/2 In. (12.7 mm)
Cutting Edge: Replaceable
Cutting Edge Dimension: 3/8 In. x 2 In. (9.5 mm x 50.8 mm)
Chute Diameter: 8.25 In. (209.6 mm)
Chute Base: Standard
Chute Rotation: 270 Degrees
Operating Weight: 760 lbs. (344.7 kg)
Shipping Weight: 840 lbs. (381 kg)
Approximate Set-Up Time: 120 Minutes
Chute Deflector Adjustment (Standard):
Must Choose an option Manual Tie Rod or Hydraulic Cylinder
Chute Deflector Adjustment Options:
Electric Solenoid Valve, Switch, and Hydraulic Cylinder
Chute: Two Part ONLY
Dual Auger: N/A
Rotating Drum (Including Hoses and Tips):
N/A
Function: Hydraulic Power Unit
Pressure: 2700 psi
Flow: 16 gpm
Reservoir Capacity: 15 gal.
System Capacity: 17 gal.
System Features: Pressure relieve valve, filter, temperature
and oil level gauge, and thermal protection switch
Hoses, Tips, and Brackets included
Tractor RPM: 540 RPM
PTO Manufacturer: Comer
Parking Stand: Standard
Hitch Category: Category I
Quick Hitch Compatibility:
iMatch Compatible
Approximate Set-Up Time: 120 Minutes

CODE	ATTACHMENT IDENTIFIER	DESCRIPTION	SUGGESTED LIST PRICE USD ($)
		Select One Code From Each Required Category	
		BASE MACHINE	
382AXF		SB2176 - 76 In. Hydraulic, 400 Series Carrier Loader Mount Snowblower with Hydraulic Chute Rotation and HP2134 Hydraulic Power Unit - Canada *Must only be used with HP2134 Hydraulic Power Unit.*	13,293.40
		HYDRAULIC POWER UNITS	
1010		HP2134 - Hydraulic Power Unit, 34 HP *Includes wiring harness to control the loader mounted implement.*	In Base Price
1095		Less HP2134 Hydraulic Power Unit	-6,509.64
		OIL COOLER	
2000		Oil Cooler for HP2025 and HP2134 Hydraulic Power Units *Includes high efficiency oil cooler, electric fan, bolted support, hoses, fittings and installation instructions. Recommended for application generating high heat.* *Not available with option Code 1095.*	In Base Price
2095		Less Oil Cooler	-1,685.28

SB2176 - 76 In. Hydraulic, 400 Series Carrier Loader Mount Snowblower with Hydraulic Chute Rotation and HP2134 Hydraulic Power Unit - Canada

Continued

CODE	ATTACHMENT IDENTIFIER	DESCRIPTION	SUGGESTED LIST PRICE USD ($)
		CHUTES	
3000		SB21 Manual Chute Deflection *Includes manual deflector.*	In Base Price
3010		SB2176 Hydraulic Chute Deflection *Includes cylinders, hoses and fittings.*	593.91
		ATTACHMENTS - ORDER AS DESIRED	
9020		Drift Cutters (SB21)	142.13
9040		Additional Wiring Harness for HP2025 and HP2134 Hydraulic Power Units for Open Operator Station Tractors *Includes complete wiring harness from battery to switch in the console.* *Not available with option Code 1095.*	93.40
		ATTACHMENTS FOR FIELD CONVERSION	
		Miscellaneous:	
	5RDF0038	Additional Wiring Harness for HP2025 and HP2134 Hydraulic Power Units for Open Operator Station Tractors *Includes complete wiring harness from battery to switch in the console.*	100.04
	5RDF0026	Drift Cutters (SB21)	152.23
	5RDF0037	Hydraulic Power Unit Cooler Upgrade (HP2134) *Includes complete cooling unit and thermal by-pass manifold. Bolted support for manifold, hoses, fittings, wiring harness and installation instructions. Only for first year power units sold together with a SB2176. Recommended for application generating high heat.*	2,505.58
	5RDF0025	Kit for Hydraulic Chute Deflector (SB2176)	640.71
	5RDF0036	Oil Cooler for HP2025 and HP2134 Hydraulic Power Units *Includes high efficiency oil cooler, electric fan, bolted support, hoses, fittings and installation instructions. Recommended for application generating high heat.*	1,816.59
	5RDF0039	Wiring Harness for HP2025 and HP2134 Hydraulic Power Units to control Loader Mounted Attachment *Includes complete wiring harness from switch in the console to 3 cavities connectors for front implements.*	88.55

180SL PrecisionCut Walk Greens Mower

Equipment for Base Machine

3.5 hp (2.6 kW) at 3600 rpm, Engine Manufacturer Net Power, Tested in accordance with SAE J1349. The engine horsepower and torque information are provided by the engine manufacturer to be used for comparison purposes only. Actual operating horsepower and torque will be less. Refer to the engine manufacturer's web site for additional information.

Gas Engine

Dual Aluminum Drive Rear Traction Drum
2.7 Qts. (2.5L) Fuel Tank
0.182 (4.62mm) Frequency of Clip
18 In. (45.7 cm) 11 Blade Reel
5 In. Reel Diameter
2.0 mm Ultra Low BedKnife
Speed Link Hieght of Cut Adjustment System
Operator Presence System
Enclosed Roller Drive Differential
Grass Catcher

Foam Wrapped Adjustable Handle Bar
Machined Grooved Solid Front Roller With Solid End Caps
Meets Carb Standards

CODE	ATTACHMENT IDENTIFIER	DESCRIPTION	SUGGESTED LIST PRICE USD ($)

Select One Code From Each Required Category

BASE MACHINE

F.O.B. Davenport, Iowa

5511M	180SL PrecisionCut Walk Greens Mower	8,710.00

DESTINATION

0202	US/Canada	In Base Price
0230	Australia/New Zealand	Same Price
0179	Europe	Same Price
0195	Mexico	Same Price
0250	All Other Countries	Same Price

REEL FRONT ROLLERS

1010	(1) 18 In. 2 In. (5 cm) Diameter Machined Grooved Solid Roller with Solid End Caps	In Base Price
1030	(1) 18 In. 2 In. (5 cm) Diameter Machined Smooth Solid Roller	-21.00
1040	(1) 18 In. 2 In. (5 cm) Diameter Wide Tube/Hollow Smooth Rollers	-53.00
1090	Less Front Rollers	-209.00

ATTACHMENTS - ORDER AS DESIRED

Miscellaneous:

9010	Transport Wheels and Stand	453.00
9020	Rotary Brush/Greens Tender Conditioner Drive (Rotary Brush or Greens Tender Conditioner Not Included)	1,167.00

180SL PrecisionCut Walk Greens Mower

Continued

CODE	ATTACHMENT IDENTIFIER	DESCRIPTION	SUGGESTED LIST PRICE USD ($)
		ATTACHMENTS - ORDER AS DESIRED Continued...	
9030		Rotary Brush	224.00
9801		Front Rotary DT Brush *Brush with helix design and increased bristles; Can not be used with GTC. Also need to order Gear Drive.*	224.00
9040		Greens Tender Conditioner	459.00
9050		Light Kit	353.00
9060		Push Brush	478.00
		ATTACHMENTS FOR FIELD CONVERSION	
		Bedknives	
	MT7350	Bedknife, 2.0 mm Ultra Low-Cut	See Parts
	MT4846	Bedknife, 2.5 mm Tournament	See Parts
		Miscellaneous:	
	AMT2904	11 Blade Reel	See Parts
	AMT2865	Frequency Speed Up Kit *Increases Clip Frequency to .160*	See Parts
	BM24731	Front Rotary DT Brush *Brush with helix design and increased bristles; Can not be used with GTC. Also need to order Gear Drive.*	239.69
	BM20568	Greens Tender Conditioner	491.13
	BM20579	Light Kit	377.71
	BM23449	Push Brush	511.46
	AMT2859	Reel Clutch Kit *Disengages Reel to Make it Easier to Pull Machine Backwards in Tight Mowing Conditions.*	See Parts
	BM20569	Rotary Brush	239.69
	BM20578	Transport Wheels and Stand	484.71
		Rollers:	
	BM24204	(1) 18 In. 2 In. (5 cm) Diameter Hollow Smooth Roller	166.91
	BM20562	(1) 18 In. 2 In. (5 cm) Diameter Machined Grooved Solid Roller With Solid End Caps	223.63
	BM20561	(1) 18 In. 2 In. (5 cm) Diameter Machined Smooth Solid Roller	201.16
	BM24203	(1) 18 In. 2 In. (5 cm) Diameter Wide Tube/Hollow Smooth Roller	166.91

180 E-Cut Hybrid Walk Greens Mower

Equipment for Base Machine

3.5 hp (2.6 kW) at 3600 rpm, Engine Manufacturer Net Power, Tested in accordance with SAE J1349. The engine horsepower and torque information are provided by the engine manufacturer to be used for comparison purposes only. Actual operating horsepower and torque will be less. Refer to the engine manufacturer?s web site for additional information.
Gas Engine

Dual Aluminum Drive Rear Traction Drum
2.7 Qts. (2.5L) Fuel Tank
QA5 18 In. (45.7 cm) 11 Blade Reel
5 In. Reel Diameter
2.0 mm Standard BedKnife
Operator Presence System
Enclosed Roller Drive Differential
Grass Catcher with large paddle clip
Foam Wrapped Adjustable Handle Bar
Machined Grooved Solid Front Roller with Solid End Caps
Hollow Smooth rear rollers
Electric Drive Motor for Cutting Unit
On Board Backlapping
On Board Electrical Diagnostic Light
Adjustable Frequancy of Clip

CODE	ATTACHMENT IDENTIFIER	DESCRIPTION	SUGGESTED LIST PRICE USD ($)

Select One Code From Each Required Category

BASE MACHINE

F.O.B. Davenport, Iowa

5540M	180 E-Cut Hybrid Walk Greens Mower	11,310.00

DESTINATION

0202	US/Canada	In Base Price
0230	Australia/New Zealand	Same Price
0136	France	99.00
0179	Europe	Same Price
0195	Mexico	Same Price
0250	All Other Countries	Same Price

REEL FRONT ROLLERS

1001	(1) 18 In. 2 In. (5 cm) Diameter Machined Grooved Solid Roller with Solid End Caps	In Base Price
1002	(1) 18 In. 2 In. (5 cm) Diameter Machined Smooth Solid Roller	-21.00
1003	(1) 18 In. 2 In. (5 cm) Diameter Wide Tube/Hollow Smooth Rollers	-53.00
1010	Less Front Rollers	-209.00

REEL REAR ROLLERS

1501	(1) 18 In. 2 In. (5 cm) Diameter Wide Tube/Hollow Smooth Rollers	In Base Price

180 E-Cut Hybrid Walk Greens Mower

Continued

CODE	ATTACHMENT IDENTIFIER	DESCRIPTION	SUGGESTED LIST PRICE USD ($)
		REEL REAR ROLLERS Continued...	
1510		Less Rear Rollers	-156.00
		REEL CUTTING UNITS	
2003		(1) Quick Adjust 5 (QA5) Seven Blade 18 In. Heavy Section Standard Cutting Units with 4.8 mm bedknife, Grass Catcher with large paddle clip, less Front and Rear Rollers, Motors and Counter Weights	-247.00
2004		(1) Quick Adjust 5 (QA5) Eleven Blade 18 In. Cutting Units with 2.0mm bedknife, Grass Catcher with large paddle clip, Yokes, less Front and Rear Rollers, Motors and Counter Weight	In Base Price
2010		Less Cutting Unit	-2,607.00
		REEL CUTTING UNIT COUNTER WEIGHTS	
4001		(1) Cutting Unit ONLY Counter Weight Kit *Needed if NOT installing GTC Kit.*	In Base Price
4003		(1) QA5 FTC/GTC ONLY Counter Weight Kit *Needed if installing GTC/Rotary Turf Brush on cutting unit.*	Same Price
4010		Less Counter Weight Kit	-58.00
		ATTACHMENTS - ORDER AS DESIRED	
		Miscellaneous:	
9010		Transport Wheels and Stand	453.00
9020		(1) GTC/FTC Gear Drive	1,197.00
9030		(1) QA5 18 In. Rotary Turf Brush *Can not be used with GTC. Also need order Gear Drive code 9020*	196.00
9040		Greens Tender Conditioner	256.00
9050		Light Kit	353.00
9060		Push Brush	478.00
9070		(1) QA5 Grass Catcher Lip Extension *This kit extends the front lip of the grass catcher closer to the reel.*	9.00
9801		(1) QA5 18 In. Front Rotary DT Brush *Brush with helix design and increased bristles; Cannot be used with GTC/FTC. Also need to order Gear Drive.*	196.00
		ATTACHMENTS FOR FIELD CONVERSION	
		Bedknives	
	MT7350	Bedknife, 2.0 mm Ultra Low-Cut	See Parts
	MT4846	Bedknife, 2.5 mm Tournament	See Parts
		Cutting Units:	
	BM24128	(1) Quick Adjust 5 (QA5) Eleven Blade 18 In. Cutting Units with Yokes, less Front and Rear Rollers, Motors and Counter Weight	2,556.23

180 E-Cut Hybrid Walk Greens Mower

Continued

CODE	ATTACHMENT IDENTIFIER	DESCRIPTION	SUGGESTED LIST PRICE USD ($)
		ATTACHMENTS FOR FIELD CONVERSION Continued...	
	BM24127	(1) Quick Adjust 5 (QA5) Seven Blade 18 In. Heavy Section Standard Cutting Units with 4.8mm bedknife, Less Front and Rear Rollers, Motors and Counter Weights	2,291.94
		Miscellaneous:	
	BM24374	(1) 18 In. Front Rotary Turf Brush *Requires GTC/FTC Gear Drive.*	209.71
	BTC10214	(1) 18 In. Rear Grass Catcher with large paddle clip *1 Needed for 180 E-Cut Hybrid Walk Greens Mowers.* *2 Needed for 8000 E-Cut Hybrid Fairway Mower.* *Not compatible with with rear bail system BTC10405.*	186.19
	BM22469	(1) GTC/FTC Gear Drive *Requires FTC or GTC.*	1,280.79
	BM24732	(1) QA5 18 In. Front Rotary DT Brush *Brush with helix design and increased bristles; Cannot be used with GTC/FTC. Also need to order Gear Drive.*	209.71
	BM23910	(1) QA5 Grass Catcher Lip Extension *This kit extends the front lip of the grass catcher closer to the reel.*	9.63
	BM24358	Greens Tender Conditioner	273.91
	BM22615	Light Kit	377.71
	BM23449	Push Brush	511.46
	BM22616	Transport Wheels and Stand	484.71
		Reel Cutting Unit Counter Weights	
	BM22762	(1) Cutting Unit ONLY Counter Weight Kit *Needed if NOT installing Rear Roller Power Brush or GTC / FTC Kits.*	62.06
	BM22704	(1) QA5 FTC/GTC ONLY Counter Weight Kit *Needed if ONLY installing FTC/GTC on cutting unit.*	62.06
		Rollers:	
	BM24204	(1) 18 In. 2 In. (5 cm) Diameter Hollow Smooth Roller	166.91
	BM20562	(1) 18 In. 2 In. (5 cm) Diameter Machined Grooved Solid Roller With Solid End Caps	223.63
	BM20561	(1) 18 In. 2 In. (5 cm) Diameter Machined Smooth Solid Roller	201.16
	BM24203	(1) 18 In. 2 In. (5 cm) Diameter Wide Tube/Hollow Smooth Roller	166.91

220SL PrecisionCut Walk Greens Mower

Equipment for Base Machine

3.5 hp (2.6 kW) at 3600 rpm, Engine Manufacturer Net Power, Tested in accordance with SAE J1349. The engine horsepower and torque information are provided by the engine manufacturer to be used for comparison purposes only. Actual operating horsepower and torque will be less. Refer to the engine manufacturer#s web site for additional information.
Gas Engine
Dual Aluminum Drive Rear Traction Drum
2.7 Qts. (2.5L) Fuel Tank
0.182 (4.62mm) Frequency of Clip
22 In. (55.9 cm) 11 Blade Reel
5 In. Reel Diameter
2.5mm Tournament BedKnife
Speed Link Hieght of Cut Adjustment System
Operator Presence System
Enclosed Roller Drive Differential
Grass Catcher
Foam Wrapped Adjustable Handle Bar
Machined Grooved Solid Front Roller With Solid End Caps
Meets Carb Standards

CODE	ATTACHMENT IDENTIFIER	DESCRIPTION	SUGGESTED LIST PRICE USD ($)

Select One Code From Each Required Category

BASE MACHINE

F.O.B. Davenport, Iowa

5521M		220SL PrecisionCut Walk Greens Mower	8,660.00

DESTINATION

0202		US/Canada	In Base Price
0230		Australia/New Zealand	Same Price
0179		Europe	Same Price
0195		Mexico	Same Price
0250		All Other Countries	Same Price

REEL FRONT ROLLERS

1010		(1) 22 In. 2 In. (5 cm) Diameter Machined Grooved Solid Roller with Solid End Caps	In Base Price
1030		(1) 22 In. 2 In. (5 cm) Diameter Machined Smooth Solid Roller	-21.00
1040		(1) 22 In. 2 In. (5 cm) Diameter Wide Tube/Hollow Smooth Rollers	-72.00
1090		Less Front Rollers	-228.00

ATTACHMENTS - ORDER AS DESIRED

Miscellaneous:

9010		Transport Wheels and Stand	453.00
9020		Rotary Brush/Greens Tender Conditioner Drive (Rotary Brush or Greens Tender Conditioner Not Included)	1,167.00

220SL PrecisionCut Walk Greens Mower
Continued

CODE	ATTACHMENT IDENTIFIER	DESCRIPTION	SUGGESTED LIST PRICE USD ($)
		ATTACHMENTS - ORDER AS DESIRED Continued...	
9030		Rotary Brush	235.00
9801		Front Rotary DT Brush *Brush with helix design and increased bristles; Can not be used with GTC. Also need to order Gear Drive.*	235.00
9040		Greens Tender Conditioner	481.00
9050		Light Kit	353.00
9060		Push Brush	478.00
		ATTACHMENTS FOR FIELD CONVERSION	
		Bedknives	
	ET17532	Bedknife, 4.8mm Fairway	See Parts
	MT7351	Bedknife, 2.0mm Ultra Low Cut	See Parts
	ET17534	Bedknife, 2.5mm Tournament	See Parts
	ET17533	Bedknife, 3.2 mm	See Parts
	ET11066	Bedknife, 3.2 mm with Hardened Insert	See Parts
		Miscellaneous:	
	AMT2865	Frequency Speed Up Kit *Increases Clip Frequency to .160*	See Parts
	BM24729	Front Rotary DT Brush *Brush with helix design and increased bristles; Can not be used with GTC. Also need to order Gear Drive.*	251.46
	BM20566	Greens Tender Conditioner	514.67
	TCU23674	John Deere Golf Operator Videos and All Products Safety Video DVD Set	See Parts
	BM20579	Light Kit	377.71
	BM23449	Push Brush	511.46
	AMT2859	Reel Clutch Kit *Disengages Reel to Make it Easier to Pull Machine Backwards in Tight Mowing Conditions.*	See Parts
	BM20567	Rotary Brush	251.46
	BM23443	Rotary Brush/Greens Tender Conditioner Drive (Rotary Brush or Greens Tender Conditioner Not Included).	1,248.69
	TCU29767	Soft Bristle Brush for Push Brush Kit (Brush only) *Softer bristles than standard brush supplied with kit.*	See Parts
	BM20578	Transport Wheels and Stand	484.71

220SL PrecisionCut Walk Greens Mower
Continued

CODE	ATTACHMENT IDENTIFIER	DESCRIPTION	SUGGESTED LIST PRICE USD ($)
		ATTACHMENTS FOR FIELD CONVERSION Continued...	
		Rollers:	
	BM24202	(1) 22 In. 2 In. (5 cm) Diameter Hollow Smooth Roller	166.91
	BM18712	(1) 22 In. 2 In. (5 cm) Diameter Machined Grooved Solid Front Roller With Solid End Caps	243.96
	BM18711	(1) 22 In. 2 In. (5 cm) Diameter Machined Smooth Solid Front Roller	221.49
	BM18480	(1) 22 In. 2 In. (5 cm) Diameter Wide Tube/Hollow Smooth Roller *For use on Greens.*	166.91

220 E-Cut Hybrid Walk Greens Mower

Equipment for Base Machine

3.5 hp (2.6 kW) at 3600 rpm, Engine Manufacturer Net Power, Tested in accordance with SAE J1349. The engine horsepower and torque information are provided by the engine manufacturer to be used for comparison purposes only. Actual operating horsepower and torque will be less. Refer to the engine manufacturer#s web site for additional information.
Gas Engine

Dual Aluminum Drive Rear Traction Drum
2.7 Qts. (2.5L) Fuel Tank
QA5 22 In. (55.9 cm) 11 Blade Reel
5 In. Reel Diameter
3.2 mm Standard BedKnife
Operator Presence System
Enclosed Roller Drive Differential
Grass Catcher with large paddle clip
Foam Wrapped Adjustable Handle Bar
Machined Grooved Solid Front Roller with Solid End Caps
Hollow Smooth rear rollers
Electric Drive Motor for Cutting Unit
On Board Backlapping
On Board Electrical Diagnostic Light
Adjustable Frequancy of Clip

CODE	ATTACHMENT IDENTIFIER	DESCRIPTION	SUGGESTED LIST PRICE USD ($)

Select One Code From Each Required Category

BASE MACHINE

F.O.B. Davenport, Iowa

5503M	220 E-Cut Hybrid Walk Greens Mower	11,260.00

DESTINATION

0202	US/Canada	In Base Price
0230	Australia/New Zealand	Same Price
0136	France	99.00
0179	Europe	Same Price
0195	Mexico	Same Price
0250	All Other Countries	Same Price

REEL FRONT ROLLERS

1001	(1) 22 In. 2 In. (5 cm) Diameter Machined Grooved Solid Roller with Solid End Caps	In Base Price
1002	(1) 22 In. 2 In. (5 cm) Diameter Machined Smooth Solid Roller	-21.00
1010	Less Front Rollers	-228.00

REEL REAR ROLLERS

1501	(1) 22 In. 2 In. (5 cm) Diameter Wide Tube/Hollow Smooth Rollers	In Base Price
1510	Less Rear Rollers	-156.00

REEL CUTTING UNITS

220 E-Cut Hybrid Walk Greens Mower

Continued

CODE	ATTACHMENT IDENTIFIER	DESCRIPTION	SUGGESTED LIST PRICE USD ($)
		REEL CUTTING UNITS Continued...	
2003		(1) Quick Adjust 5 (QA5) Seven Blade 22 In. (55.9 cm) Cutting Units with Adjustable 4.8mm Bedknife, 5 In. (12.7 cm) Diameter Reels and Grass Catcher with large paddle clip, Less Front and Rear Rollers, Motor and counter weight.	-82.00
2004		(1) Quick Adjust 5 (QA5) Eleven Blade 22 In. (55.9 cm) Cutting Units with Adjustable 2.0mm Bedknife, 5 In. (12.7 cm) Diameter Reels and Grass Catcher with large paddle clip, Less Front and Rear Rollers, Motor and counter weight.	In Base Price
2010		Less Cutting Unit	-2,432.00
		REEL CUTTING UNIT COUNTER WEIGHTS	
4001		(1) Cutting Unit ONLY Counter Weight Kit *Needed if NOT installing GTC Kit.*	In Base Price
4003		(1) QA5 FTC/GTC ONLY Counter Weight Kit *Needed if installing GTC/Rotary Turf Brush on cutting unit.*	Same Price
4010		Less Counter Weight Kit	-58.00
		ATTACHMENTS - ORDER AS DESIRED	
		Miscellaneous:	
9010		(1) Transport Wheels and Stand	453.00
9020		(1) GTC/FTC Gear Drive *Rotary Brush or Greens Tender Conditioner Not Included.*	1,197.00
9030		(1) QA5 22 In. Rotary Turf Brush *Can not be used with GTC. Also need order Gear Drive code 9020*	196.00
9040		Greens Tender Conditioner	264.00
9050		Light Kit	353.00
9060		Push Brush	478.00
9070		(1) QA5 Grass Catcher Lip Extension *This kit extends the front lip of the grass catcher closer to the reel.*	9.00
9801		(1) QA5 22 In. Front Rotary DT Brush *Brush with helix design and increased bristles; Cannot be used with GTC/FTC. Also need to order Gear Drive.*	196.00
		ATTACHMENTS FOR FIELD CONVERSION	
		Bedknives	
	ET17532	Bedknife, 4.8mm Fairway	See Parts
	MT7351	Bedknife, 2.0mm Ultra Low Cut	See Parts
	ET17534	Bedknife, 2.5mm Tournament	See Parts
	ET17533	Bedknife, 3.2 mm	See Parts

220 E-Cut Hybrid Walk Greens Mower

Continued

CODE	ATTACHMENT IDENTIFIER	DESCRIPTION	SUGGESTED LIST PRICE USD ($)
		ATTACHMENTS FOR FIELD CONVERSION Continued...	
	ET11066	Bedknife, 3.2 mm with Hardened Insert	See Parts
		Cutting Units:	
	BM24130	(1) QA5 Eleven Blade 22 In. Cutting Unit w/Adjustable 2.0 mm Bedknife, Less Front and Rear Roller & Motor	2,379.69
	BM24129	(1) QA5 Seven Blade 22 In. Heavy Section Blade Cutting Unit With Adjustable 4.8 mm Bedknife, Less Yokes, Front and Rear Roller & Motor	2,291.94
	BM22458	(1) QA5 Seven Blade 22 In. Heavy Section Blade Cutting Unit With Adjustable Bedknife, Less Yokes, Front Roller & Motor	See Parts
		Miscellaneous:	
	BM22761	(1) 22 In. Front Rotary Turf Brush *Can not be used with FTC/GTC.* *Requires GTC/FTC Gear Drive.*	209.71
	BM22471	(1) 22 In. Greens Tender Conditioner (GTC) Shaft and Blades *Requires GTC/FTC Gear Drive.*	282.49
	BM22469	(1) GTC/FTC Gear Drive *Requires FTC or GTC.*	1,280.79
	BM24730	(1) QA5 22 In. Front Rotary DT Brush *Brush with helix design and increased bristles; Cannot be used with GTC/FTC. Also need to order Gear Drive.*	209.71
	BM23910	(1) QA5 Grass Catcher Lip Extension *This kit extends the front lip of the grass catcher closer to the reel.*	9.63
	TCB11730	Compliance Kit *This kit must be ordered to meet the EU Country of France shielding regulations.*	105.93
	BTC10216	Grass Catcher with large paddle clip (22 Low Profile) *2 needed for complete machine for 2500#s.* *2 needed for rear locations for Fairway Mowers 7700/8700.* *1 needed for 180 & 220 E-Cut Hybrid Walk Greens Mower.*	175.49
	BM22615	Light Kit	377.71
	BM23449	Push Brush	511.46
	BM24199	QA5 Grass Catcher Side Plate Insert *2 Needed for complete machine 2500's.* *1 Needed for front center location for 7500/8500 Fairway Mowers.* *1 Needed for 180 & 220 E-Cut Hybrid Walk Greens Mowers.* *3 Needed for front 8000 E-Cut Hybrid Fairway Mower.*	47.09
	TCU29767	Soft Bristle Brush for Push Brush Kit (Brush only) *Softer bristles than standard brush supplied with kit.*	See Parts
	BM22616	Transport Wheels and Stand	484.71
		Reel Cutting Unit Counter Weights	
	BM22762	(1) Cutting Unit ONLY Counter Weight Kit *Needed if NOT installing Rear Roller Power Brush or GTC / FTC Kits.*	62.06

220 E-Cut Hybrid Walk Greens Mower
Continued

CODE	ATTACHMENT IDENTIFIER	DESCRIPTION	SUGGESTED LIST PRICE USD ($)
		ATTACHMENTS FOR FIELD CONVERSION Continued...	
	BM22704	(1) QA5 FTC/GTC ONLY Counter Weight Kit *Needed if ONLY installing FTC/GTC on cutting unit.*	62.06
		Rollers:	
	BM24202	(1) 22 In. 2 In. (5 cm) Diameter Hollow Smooth Roller	166.91
	BM18712	(1) 22 In. 2 In. (5 cm) Diameter Machined Grooved Solid Front Roller With Solid End Caps	243.96
	BM18711	(1) 22 In. 2 In. (5 cm) Diameter Machined Smooth Solid Front Roller	221.49
	BM18480	(1) 22 In. 2 In. (5 cm) Diameter Wide Tube/Hollow Smooth Roller *For use on Greens.*	166.91

260SL PrecisionCut Walk Greens Mower

Equipment for Base Machine

3.5 hp (2.6 kW) at 3600 rpm, Engine Manufacturer Net Power, Tested in accordance with SAE J1349. The engine horsepower and torque information are provided by the engine manufacturer to be used for comparison purposes only. Actual operating horsepower and torque will be less. Refer to the engine manufacturer#s web site for additional information.
Gas Engine
Dual Aluminum Drive Rear Traction Drum
2.7 Qts. (2.5L) Fuel Tank
0.286 (7.26mm) Frequency of Clip (7-Blade)
26 In. (66.0 cm) 7 Blade Reel
5 In. Reel Diameter
3.2 mm Standard BedKnife
Speed Link Hieght of Cut Adjustment System
Operator Presence System
Enclosed Roller Drive Differential
Grass Catcher
Foam Wrapped Adjustable Handle Bar
Machined Grooved Solid Front Roller with Solid End Caps
Meets Carb Standards

CODE	ATTACHMENT IDENTIFIER	DESCRIPTION	SUGGESTED LIST PRICE USD ($)

Select One Code From Each Required Category

BASE MACHINE

F.O.B. Davenport, Iowa

5530M	260SL PrecisionCut Walk Greens Mower	9,958.00

REEL FRONT ROLLERS

1010	(1) 26 In. 2 In. (5 cm) Diameter Machined Grooved Solid Roller with Solid End Caps	In Base Price
1030	(1) 26 In. 2 In. (5 cm) Diameter Machined Smooth Solid Roller	-21.00
1090	Less Front Rollers	-248.00

REEL CUTTING UNITS

2001	(1) 26 In. 7-Blade Cutting Unit	In Base Price

ATTACHMENTS - ORDER AS DESIRED

European CE Kit:

9100	European CE Conversion Kit for SL Walk Greens Mower *Must be Ordered to Receive a 260SL Walk Greens Mower Which Meets CE Requirements. Kit Includes Pictorial Decals and Operator's Manuals in English, French, German, Spanish and Italian.*	No Charge

Miscellaneous:

9010	Transport Wheels and Stand	453.00
9020	Rotary Brush/Greens Tender Conditioner Drive (Rotary Brush or Greens Tender Conditioner Not Included)	1,167.00
9030	Rotary Brush	246.00
9040	Greens Tender Conditioner	503.00

260SL PrecisionCut Walk Greens Mower

Continued

CODE	ATTACHMENT IDENTIFIER	DESCRIPTION	SUGGESTED LIST PRICE USD ($)
		ATTACHMENTS - ORDER AS DESIRED Continued...	
9050		Light Kit	353.00
		ATTACHMENTS FOR FIELD CONVERSION	
		Bedknives	
	MT6947	Bedknife, 3.2 mm	See Parts
	MT6946	Bedknife, Long-Life Fairway	See Parts
		Miscellaneous:	
	AMT2865	Frequency Speed Up Kit *Increases Clip Frequency to .160*	See Parts
	BM20570	Greens Tender Conditioner	538.21
	TCU23674	John Deere Golf Operator Videos and All Products Safety Video DVD Set	See Parts
	BM20579	Light Kit	377.71
	AMT2859	Reel Clutch Kit *Disengages Reel to Make it Easier to Pull Machine Backwards in Tight Mowing Conditions.*	See Parts
	BM20571	Rotary Brush	255.73
	BM23443	Rotary Brush/Greens Tender Conditioner Drive (Rotary Brush or Greens Tender Conditioner Not Included).	1,248.69
	TCU29767	Soft Bristle Brush for Push Brush Kit (Brush only) *Softer bristles than standard brush supplied with kit.*	See Parts
	BM20578	Transport Wheels and Stand	484.71
		Rollers:	
	BM18480	(1) 22 In. 2 In. (5 cm) Diameter Wide Tube/Hollow Smooth Roller *For use on Greens.*	166.91
	BM20564	(1) 26 In. 2 In. (5 cm) Diameter Machined Grooved Solid Front Roller with Solid End Caps	265.36
	BM20563	(1) 26 In. 2 In. (5 cm) Diameter Machined Smooth Solid Front Roller	243.96
	BM17670	(1) 26 In. 3 In. (7.6 cm) Diameter Heavy Duty Grooved Disc Front Roller	389.49
	BM17671	(1) 26 In. 3 In. (7.6 cm) Diameter Heavy Duty Smooth Solid Front Roller	337.06
	BM19818	(1) 26 In. 3 In. (7.6 cm) Diameter Spiral Grooved Front Roller With Spiral End Caps	457.96

260SL PrecisionCut Walk Greens Mower

Equipment for Base Machine

3.5 hp (2.6 kW) at 3600 rpm, Engine Manufacturer Net Power, Tested in accordance with SAE J1349. The engine horsepower and torque information are provided by the engine manufacturer to be used for comparison purposes only. Actual operating horsepower and torque will be less. Refer to the engine manufacturer?s web site for additional information.
Gas Engine

Dual Aluminum Drive Rear Traction Drum
2.7 Qts. (2.5L) Fuel Tank
0.286 (7.26mm) Frequency of Clip (7-Blade)
26 In. (66.0 cm) 7 Blade Reel
5 In. Reel Diameter
3.2 mm Standard BedKnife
Speed Link Hieght of Cut Adjustment System
Operator Presence System
Enclosed Roller Drive Differential
Grass Catcher

Foam Wrapped Adjustable Handle Bar
Machined Grooved Solid Front Roller with Solid End Caps
Meets Carb Standards

CODE	ATTACHMENT IDENTIFIER	DESCRIPTION	SUGGESTED LIST PRICE USD ($)

Select One Code From Each Required Category

BASE MACHINE

F.O.B. Davenport, Iowa

5531M	260SL PrecisionCut Walk Greens Mower	9,958.00

DESTINATION

0202	US/Canada	In Base Price
0230	Australia/New Zealand	Same Price
0179	Europe	Same Price
0195	Mexico	Same Price
0250	All Other Countries	Same Price

REEL FRONT ROLLERS

1010	(1) 26 In. 2 In. (5 cm) Diameter Machined Grooved Solid Roller with Solid End Caps	In Base Price
1030	(1) 26 In. 2 In. (5 cm) Diameter Machined Smooth Solid Roller	-21.00
1090	Less Front Rollers	-248.00

REEL CUTTING UNITS

2000	(1) 26 In. 11-Blade Cutting Unit	Same Price

ATTACHMENTS - ORDER AS DESIRED

European CE Kit:
Miscellaneous:

9010	Transport Wheels and Stand	453.00

260SL PrecisionCut Walk Greens Mower

Continued

CODE	ATTACHMENT IDENTIFIER	DESCRIPTION	SUGGESTED LIST PRICE USD ($)
		ATTACHMENTS - ORDER AS DESIRED Continued...	
9020		Rotary Brush/Greens Tender Conditioner Drive (Rotary Brush or Greens Tender Conditioner Not Included)	1,167.00
9030		Rotary Brush	246.00
9040		Greens Tender Conditioner	503.00
9050		Light Kit	353.00
		ATTACHMENTS FOR FIELD CONVERSION	
		Bedknives	
	MT6947	Bedknife, 3.2 mm	See Parts
	MT6946	Bedknife, Long-Life Fairway	See Parts
		Miscellaneous:	
	AMT2865	Frequency Speed Up Kit *Increases Clip Frequency to .160*	See Parts
	BM20570	Greens Tender Conditioner	538.21
	TCU23674	John Deere Golf Operator Videos and All Products Safety Video DVD Set	See Parts
	BM20579	Light Kit	377.71
	BM23449	Push Brush	511.46
	AMT2859	Reel Clutch Kit *Disengages Reel to Make it Easier to Pull Machine Backwards in Tight Mowing Conditions.*	See Parts
	BM20571	Rotary Brush	255.73
	TCU29767	Soft Bristle Brush for Push Brush Kit (Brush only) *Softer bristles than standard brush supplied with kit.*	See Parts
	BM20578	Transport Wheels and Stand	484.71
		Rollers:	
	BM20564	(1) 26 In. 2 In. (5 cm) Diameter Machined Grooved Solid Front Roller with Solid End Caps	265.36
	BM20563	(1) 26 In. 2 In. (5 cm) Diameter Machined Smooth Solid Front Roller	243.96
	BM17670	(1) 26 In. 3 In. (7.6 cm) Diameter Heavy Duty Grooved Disc Front Roller	389.49
	BM17671	(1) 26 In. 3 In. (7.6 cm) Diameter Heavy Duty Smooth Solid Front Roller	337.06
	BM19818	(1) 26 In. 3 In. (7.6 cm) Diameter Spiral Grooved Front Roller With Spiral End Caps	457.96

22B Walk Greens Mower Trailer

Equipment for Base Machine

Carries 2 Walk Greens Mowers
Compatible with A, B, C and SL Models 180 and 220 E-Cut Hybrid Walk Greens Mower
Multiple angle location ramp with stainless steel latch system
Spray-On Bedliner on floor of trailer bed and ramp
Welded storage holders for retaining bar when not in use
Box Capacity: 12.7 Cu. Ft. (0.36 cu. m)
Maximum Load: 1000 Lbs. (454 kg)
Maximum Payload: 700 Lbs. (318 kg)
Pneumantic Turf Tires 2 Ply 22.5x10.00-8
Ball Bearing, Double Sealed Wheel Bearings
1-7/8 In. Dia. (4.8 cm) Hitch Coupler
Inside Box 60"L X 40"W
Outside Box 62"L x46"W
Box Side Panels 8.5" Tall
Front Wall 13" Tall
Outside to Outside Tire is 66"
Ramp Down Position 27" L X 46" W down
Trailer Tongue 43" L

CODE	ATTACHMENT IDENTIFIER	DESCRIPTION	SUGGESTED LIST PRICE USD ($)
		Select One Code From Each Required Category	
		BASE MACHINE	
		F.O.B. Davenport, Iowa	
0521TC		22B Walk Greens Mower Trailer *Must be Ordered in Quantities of Two.* *Requires Utility Vehicles to be Equipment* *With 1-7/8 In. (4.8cm) Ball Hitch.*	2,325.00
		ATTACHMENTS - ORDER AS DESIRED	
		European CE Kit:	
9100		European CE Conversion Kit for 22B Greensmower Trailer *Must Be Ordered to Receive a 22B Walk-Behind Greensmower Trailer Which Meets CE Mark Requirements. Kit Includes Pictorial Decals and Operator's Manual in English, French, German, Spanish and Italian.*	No Charge
		ATTACHMENTS FOR FIELD CONVERSION	
		Miscellaneous:	
	TCU23674	John Deere Golf Operator Videos and All Products Safety Video DVD Set	See Parts
	TCU29767	Soft Bristle Brush for Push Brush Kit (Brush only) *Softer bristles than standard brush supplied with kit.*	See Parts

2500B PrecisionCut Riding Greens Mower - Gas

Equipment for Base Machine

21.0 hp (15.7 kW) at 3600 rpm, Engine Manufacturer Gross Power, Tested in accordance with SAE J1995. The engine horsepower and torque information are provided by the engine manufacturer to be used for comparison purposes only. Actual operating horsepower and torque will be less. Refer to the engine manufacturer#s web site for additional information.

Foot Actuated Adjustable Tilt Steering Wheel
Deluxe Seat
2-Post SAE J21294 Roll Over Protection Structure with Seat Belts
Command Arm Operator Controls
Four Function LED Warning Monitor with Hour Meter
One Touch Hand Lift Lever
Hand Operated Mow/Transport Lever
Direct Mounted Pumps
Power Steering
Hydrostatic Drive
Single Reel Pump
Hydraulic Reel Motors
Offset Reel Design
Quik-Tatch Cutting Units with Adjustable Extension Shields
Quick Adjust QA5 Cutting Units with Speed Link Height of Cut System
Dual Point Adjustable Bed Knife with Notch Adjustments
Double Upstops for Front Cutting Units
Machined Grooved Solid Front Rollers with Solid End Caps and 22 In. 2 In. (5 cm) Diameter Wide Tube/Hollow Smooth Rear Rollers
Sit on Seat Diagnostics
White Box Controller
Micro-Lap Backlapping Valve and Reel Speed Control
Disk Brakes
Hydraulic Oil Cooler
18X10.50-10 2 Ply Smooth Floatation Tires
Single Fuel Tank, 7.9 Gallon (30L) Fuel Capacity
BCI Group 40 Maintenance Free Battery
John Deere Golf Operator Videos and All Products Safety Video DVD Set

CODE	ATTACHMENT IDENTIFIER	DESCRIPTION	SUGGESTED LIST PRICE USD ($)

Select One Code From Each Required Category

BASE MACHINE

F.O.B. Raleigh, North Carolina

1205TC	2500B PrecisionCut Riding Greens Mower - Gas	33,187.00

REEL CUTTING UNITS

1003	(3) Vertical Cutting Units With Front AND Rear Rollers and Molded One-Piece Grass Catchers with large paddle clip and Grass Catcher Side Plate Insert, Rear catcher and bail system *Requires 2010 Code, Less Front Rollers.*	-69.00
1004	(3) Quick Adjust 5 (QA5) Seven Blade 22 In. (55.9 cm) Heavy Section Cutting Units With Adjustable 4.8mm Bedknife, 5 In. (12.7 cm) Diameter Reels and Molded One-Piece Grass Catchers with large paddle clip and Grass Catcher Side Plate Insert, Rear catcher and bail system, Less Front and Rear Rollers	-246.00
1005	(3) Quick Adjust 5 (QA5) Eleven Blade 22 In. (55.9 cm) Cutting Units With Adjustable 2.0mm Bedknife, 5 In. (12.7 cm) Diameter Reels and Molded One-Piece Grass Catchers with large paddle clip and Grass Catcher Side Plate Insert, Rear catcher and bail system, Less Front and Rear Rollers	In Base Price
1010	Less Cutting Units and Grass Catchers with large paddle clip	-7,498.00

REEL FRONT ROLLERS

2001	(3) 22 In. 2 In. (5 cm) Diameter Wide Tube/Hollow Smooth Front Rollers	-216.00
2002	(3) 22 In. 2 In. (5 cm) Diameter Machined Grooved	In Base Price

2500B PrecisionCut Riding Greens Mower - Gas

Continued

CODE	ATTACHMENT IDENTIFIER	DESCRIPTION	SUGGESTED LIST PRICE USD ($)
		REEL FRONT ROLLERS Continued... Solid Front Rollers With Solid End Caps	
2003		(3) 22 In. 3 In. (7.6 cm) Diameter Spiral Grooved Front Rollers with Spiral End Caps *Not compatible if FTC / GTC installed.* *3 In. Diameter Front Rollers Raise the Minimum Height of Cut.*	456.00
2004		(3) 22 In. 2 In. (5 cm) Diameter Machined Grooved Wide Solid Front Rollers	-18.00
2005		(3) 22 In. 2 In. (5cm) MT Spiral Roller *NOT FOR USE ON GREENS. Roller used to help reduce roller overlaps in fairways. For best results install in front and rear roller location of cutting unit.*	348.00
2006		(3) 22 In. 2 In. (5cm) MT Grooved Roller *NOT FOR USE ON GREENS. Roller used to help reduce roller overlaps in fairways. For best results install in front and rear roller location of cutting unit.*	348.00
2010		Less Front Rollers	-684.00
		REEL REAR ROLLERS	
2501		(3) 22 In. 2 In. (5 cm) Diameter Wide Tube/Hollow Smooth Rollers	In Base Price
2502		(3) 22 In. 2 In. (5cm) MT Spiral Roller *NOT FOR USE ON GREENS. Roller used to help reduce roller overlaps in fairways. For best results install in front and rear roller location of cutting unit.*	564.00
2503		(3) 22 In. 2 In. (5cm) MT Grooved Roller *NOT FOR USE ON GREENS. Roller used to help reduce roller overlaps in fairways. For best results install in front and rear roller location of cutting unit.*	564.00
2510		Less Rear Rollers	-468.00
		WHEELS WITH TIRES (THREE)	
3001		(3) Smooth Floatation Tires and Wheels (18x10.50-10)	In Base Price
3002		(3) Smooth Tires and Wheels (20x10.00-10)	11.00
3003		(3) Turf Guard Traction Tires and Wheels (20x10.00-10)	33.00
3004		(3) Smooth Tires and Wheels (20x10.00-10) 4 Ply Rated *Lowest Recommended Tire pressure 15 PSI (1.03 bar). Due to higher pressures may cause marking on soft greens.*	11.00
3010		Less Wheels with Tires	-425.00
		REEL CUTTING UNIT COUNTER WEIGHTS	
4001		(3) Cutting Unit ONLY Counter Weight Kit *Needed if NOT installing Rear Roller Power Brush or GTC/FTC Kits.*	In Base Price
4002		(3) QA5 Cutting Unit Brush Only Counter Weight Kit *Needed if only installing Rear Roller Power Brush on cutting unit.*	216.00
4003		(3) QA5 Cutting Unit FTC/GTC ONLY Counter Weight Kit *Needed if ONLY installing FTC/GTC on cutting unit.*	Same Price

2500B PrecisionCut Riding Greens Mower - Gas
Continued

CODE	ATTACHMENT IDENTIFIER	DESCRIPTION	SUGGESTED LIST PRICE USD ($)
		REEL CUTTING UNIT COUNTER WEIGHTS Continued...	
4010		Less Counter Weight kit *Ordered if Both Rear Roller Power Brush and FTC/GTC Kit Installed.*	-174.00
		REEL CUTTING UNIT ATTACHING YOKES	
5001		(3) 22 Inch Cutting Unit Attaching Yokes *Needed to attach 2009 cutting units to 2009 traction machine.*	In Base Price
5002		(3) 22 Inch Cutting Unit Rear Attaching Point Yoke for FAIRWAYS *These yokes attach at the rear of the cutting unit and are for units used in fairway applications (not recommended for greens).*	789.00
5010		Less Cutting Yokes	-549.00
		ATTACHMENTS - ORDER AS DESIRED	
		CE Kit:	
9330		Battery Label Kit *This kit must be ordered to meet battery labeling requirement in Brazil.*	No Charge
		Cutting Units:	
9010		(3) QA5 22 In. Vertical Cutting Unit With Front Roller Less Motor	6,603.00
		Miscellaneous:	
9015		(3) 22 In. Fairway Tender Conditioners (FTC) Shaft and Blades *Requires order code 9016.*	1,395.00
9016		(3) GTC/FTC Gear Drive *Requires Order Code (9015 or 9020).*	3,591.00
9017		(3) 22 In. Rear Roller Power Brushes *Requires order code 9018.*	396.00
9018		(3) Rear Roller Power Brush Drive *Requires order code 9017.*	1,083.00
9019		(3) 22 In. Front Rotary Turf Brush *Cannot be used with FTC/GTC.* *Also requires gear drive.*	588.00
9020		(3) 22 In. Greens Tender Conditioner (GTC) Shaft and Blades *Requires order code 9016.*	792.00
9025		(3) Smooth Roller Scrapers	45.00
9070		(3) QA5 Grass Catcher Lip Extension *This kit extends the front lip of the Grass Catcher closer to the reel.*	27.00
9115		Greens Mower Convenience Kit *Contains Storage Area Pad and Elastic Storage Retainer.*	74.00
9910		Leak Detector Kit *For Serial No. TC250BG010001-.*	1,301.00
9801		(3) 22 In. Front Rotary DT Brush *Brush with helix design and increased bristles; Cannot be used with GTC/FTC. Also need to order Gear Drive.*	588.00

2500B PrecisionCut Riding Greens Mower - Gas
Continued

CODE	ATTACHMENT IDENTIFIER	DESCRIPTION	SUGGESTED LIST PRICE USD ($)
		ATTACHMENTS - ORDER AS DESIRED Continued...	
9803		(3) QA5 Eleven Blade 22 In. Cutting Units less front and rear rollers	6,672.00
9804		(3) QA5 Seven Blade 22 In. Cutting Units less front and rear rollers	6,426.00
		ATTACHMENTS FOR FIELD CONVERSION	
		Bedknives	
	ET17532	Bedknife, 4.8mm Fairway	See Parts
	MT7351	Bedknife, 2.0mm Ultra Low Cut	See Parts
	ET17534	Bedknife, 2.5mm Tournament	See Parts
	ET17533	Bedknife, 3.2 mm	See Parts
	ET11066	Bedknife, 3.2 mm with Hardened Insert	See Parts
	ET17767	Bedknife, Hi-cut Fairway 7.6 mm	See Parts
		Cutting Units:	
	BM22460	(1) QA5 22 In. Vertical Cutting Unit With Front Roller Less Motor	2,355.07
	BM24130	(1) QA5 Eleven Blade 22 In. Cutting Unit w/Adjustable 2.0 mm Bedknife, Less Front and Rear Roller & Motor	2,379.69
	BM24129	(1) QA5 Seven Blade 22 In. Heavy Section Blade Cutting Unit With Adjustable 4.8 mm Bedknife, Less Yokes, Front and Rear Roller & Motor	2,291.94
		European CE Kit:	
	TCB11729	Compliance Kit *This kit must be ordered to meet the EU country of France shielding regulations.*	50.29
		Miscellaneous:	
	BM22671	(1) 22 In. Fairway Tender Conditioners (FTC) Shaft and Blades *Requires GTC/FTC Gear Drive (BM22469).*	497.56
	BM22761	(1) 22 In. Front Rotary Turf Brush	209.71
	BM22471	(1) 22 In. Greens Tender Conditioner (GTC) Shaft and Blades *Requires GTC/FTC Gear Drive.*	282.49
	BM22668	(1) 22 In. Rear Roller Power Brush *Requires Rear Roller Power Brush Drive (BM22527).*	141.24
	BM22995	(1) 22 In. Smooth Roller Scraper	16.06
	BM22469	(1) GTC/FTC Gear Drive	1,280.79
	BM24730	(1) QA5 22 In. Front Rotary DT Brush *Brush with helix design and increased bristles; Cannot be used with GTC/FTC. Also need to order Gear Drive.*	209.71
	BM23910	(1) QA5 Grass Catcher Lip Extension *This kit extends the front lip of the grass catcher closer to the reel.*	9.63

2500B PrecisionCut Riding Greens Mower - Gas

Continued

CODE	ATTACHMENT IDENTIFIER	DESCRIPTION	SUGGESTED LIST PRICE USD ($)
		ATTACHMENTS FOR FIELD CONVERSION Continued...	
	BM22527	(1) Rear Roller Power Brush Drive *Requires 22 In. Rear Roller Power Brush (BM22668).*	386.27
	BTC10122	(3) 22 Inch Cutting Unit Rear Attaching Point Yoke Kit for FAIRWAYS *These yokes attach at the rear of the cutting unit and are for units used in fairway applications one (1) kit needed per machine.*	1,431.66
	TCA19547	2"x 22" Machine Grooved Roller Scraper	See Parts
	BM23002	3"X22" GROOVE ROLLER SCRAPER *Not compatible with Fairway Tender Conditioners (FTC).* *Can be used on QA5 Cutting units by ordering (1) TCA19597* *for each scraper from parts. Requires 3 for 2500's* *and 5 for Fairway mowers.*	146.59
	AMT2477	Arm Rest Kit (Includes One Arm Rest and Hardware)	See Parts
	BM23080	Cutting Unit Top Shield Extension (Set of 3)	84.53
	TCB11356	Cutting Unit Yokes Kit (22") for MY1998-2008	817.49
	TCB11341	Cutting Unit Yokes Kit for MY 2009 # Current or QA5 Cutting Units	587.43
	BM19744	Dew Whip Holder Bracket	63.13
	BTC10606	Grass Catcher Mounting Kit *Mounting Hardware for complete machine.*	143.39
	BTC10216	Grass Catcher with large paddle clip (22 Low Profile) *2 needed for complete machine for 2500#s.* *2 needed for rear locations for Fairway Mowers 7700/8700.* *1 needed for 180 & 220 E-Cut Hybrid Walk Greens Mower.*	175.49
	BM19739	Greens Mower Convenience Kit *Contains Storage Area Pad and Elastic Storage Retainer.*	79.19
	AMT2978	Height of Cut Gauge Bar	See Parts
	TCB11710	Large E-Crate Cover	See Parts
	TCB11165	Leak Detector Kit *For Serial No. TC250BG010001-Current Models*	1,392.07
	BM19746	Light Kit, Front	243.96
	BM19852	Light Kit, Rear Grass Catcher *Mounting Hardware and Wiring with One Light.*	53.50
	BM24199	QA5 Grass Catcher Side Plate Insert *2 Needed for complete machine 2500's.* *1 Needed for front center location for 7500/8500 Fairway Mowers.* *1 Needed for 180 & 220 E-Cut Hybrid Walk Greens Mowers.* *3 Needed for front 8000 E-Cut Hybrid Fairway Mower.*	47.09
	BTC10407	Rear Grass Catcher Bail Kit *Mounting Bail needed for rear cutting unit 1 needed per machine.*	153.01

2500B PrecisionCut Riding Greens Mower - Gas
Continued

CODE	ATTACHMENT IDENTIFIER	DESCRIPTION	SUGGESTED LIST PRICE USD ($)
		ATTACHMENTS FOR FIELD CONVERSION Continued...	
	BTC10408	Rear Grass Catcher with Handles *Requires 2 for complete machine & rear grass catcher bail system BTC10501.*	142.31
	TCB11167	Third Wheel Assist Kit	2,455.66
	BM19750	Tires and Wheels (18x10.50-10), (3) Smooth Floatation	454.76
	BM19748	Tires and Wheels (20x10.00-10), (3) Smooth	466.51
	BTC10071	Tires and Wheels (20x10.00-10), (3) Smooth 4 Ply-Rated *Lowest Recommended Tire pressure 15 PSI (1.03 bar). Due to higher pressures may cause marking on soft greens.*	466.51
	BM19749	Tires and Wheels (20x10.00-10), (3) Turf Guard Traction	490.06
		Reel Cutting Unit Counter Weights	
	BM22762	(1) Cutting Unit ONLY Counter Weight Kit *Needed if NOT installing Rear Roller Power Brush or GTC / FTC Kits.*	62.06
	BM22705	(1) QA5 Cutting Unit Brush Only Counter Weight Kit *Needed if only installing Rear Roller Power Brush on cutting unit.*	139.10
	BM22704	(1) QA5 FTC/GTC ONLY Counter Weight Kit *Needed if ONLY installing FTC/GTC on cutting unit.*	62.06
		Rollers:	
	BM18712	(1) 22 In. 2 In. (5 cm) Diameter Machined Grooved Solid Front Roller With Solid End Caps	243.96
	BM18481	(1) 22 In. 2 In. (5 cm) Diameter Machined Grooved Wide Solid Front Roller	237.54
	BE23416	(1) 22 In. 2 In. (5 cm) Diameter Machined Grooved Solid Front Roller *This Roller is 20mm Shorter Than BM18481.*	222.56
	BM18480	(1) 22 In. 2 In. (5 cm) Diameter Wide Tube/Hollow Smooth Roller *For use on Greens.*	166.91
	BTC10267	(1) 22 In. 2 In. (5cm) MT Grooved Roller	368.09
	BM17668	(1) 22 In. 3 In. (7.6 cm) Diameter Heavy Duty Grooved Disc Front Roller *Not compatible if FTC / GTC installed.* *3 In. Diameter Front Rollers Raise the Minimum Height of Cut.*	335.99
	BM19817	(1) 22 In. 3 In. (7.6 cm) Diameter Spiral Grooved Front Roller With Spiral End Caps *Not compatible if FTC / GTC installed.* *3 In. Diameter Front Rollers Raise the Minimum Height of Cut.*	406.60
	BM23566	(1) 2X22" MT SPIRAL Roller *Roller used to help reduce roller overlaps in fairways. For best results install in front and rear roller location of cutting unit.*	368.09

2500B PrecisionCut Riding Greens Mower - Diesel

Equipment for Base Machine

19.6 hp (14.6 kW) per SAE J1995 Engine hp is provided by the engine manufacturer to be used for comparison purposes only. Actual operating hp will be less. Refer to the engine manufacturer#s web site for additional information.

Meets EPA Tier2, interim Tier 4
Foot Actuated Adjustable Tilt Steering Wheel
Deluxe Seat
2-Post SAE J21294 Roll Over Protection Structure with Seat Belts
Command Arm Operator Controls
Four Function LED Warning Monitor with Hour Meter
One Touch Hand Lift Lever
Hand Operated Mow/Transport Lever
Direct Mounted Pumps
Power Steering
Hydrostatic Drive
Single Reel Pump
Hydraulic Reel Motors
Offset Reel Design
Quik-Tatch Cutting Units with Adjustable Extension Shields
Quick Adjust QA5 Cutting Units with Speed Link Height of Cut System
Dual Point Adjustable Bed Knife with Notch Adjustments
Double Upstops for Front Cutting Units
Machined Grooved Solid Front Rollers with Solid End Caps
22 In. 2 In. (5 cm) Diameter Wide Tube/Hollow Smooth Rear Rollers
Sit on Seat Diagnostics
White Box Controller
Micro-Lap Backlapping Valve and Reel Speed Control
Disk Brakes
Hydraulic Oil Cooler
18X10.50-10 2 Ply Smooth Floatation Tires
Single Fuel Tank, 7.9 Gallon (30L) Fuel Capacity
BCI Group 40 Maintenance Free Battery
John Deere Golf Operator Videos and All Products Safety Video DVD Set

CODE	ATTACHMENT IDENTIFIER	DESCRIPTION	SUGGESTED LIST PRICE USD ($)

Select One Code From Each Required Category

BASE MACHINE

F.O.B. Raleigh, North Carolina

1184TC	2500B PrecisionCut Riding Greens Mower - Diesel	39,144.00

REEL CUTTING UNITS

1003	(3) Vertical Cutting Units With Front AND Rear Rollers and Molded One-Piece Grass Catchers with large paddle clip and Grass Catcher Side Plate Insert, Rear catcher and bail system	-69.00
1004	(3) Quick Adjust 5 (QA5) Seven Blade 22 In. (55.9 cm) Heavy Section Cutting Units With Adjustable 4.8mm Bedknife, 5 In. (12.7 cm) Diameter Reels and Molded One-Piece Grass Catchers with large paddle clip and Grass Catcher Side Plate Insert, Rear catcher and bail system, Less Front and Rear Rollers	-246.00
1005	(3) Quick Adjust 5 (QA5) Eleven Blade 22 In. (55.9 cm) Cutting Units With Adjustable 2.0mm Bedknife, 5 In. (12.7 cm) Diameter Reels and Molded One-Piece Grass Catchers with large paddle clip and Grass Catcher Side Plate Insert, Rear catcher and bail system, Less Front and Rear Rollers	In Base Price
1010	Less Cutting Units and Grass Catchers with large paddle clip	-7,498.00

REEL FRONT ROLLERS

2001	(3) 22 In. 2 In. (5 cm) Diameter Wide Tube/Hollow Smooth Front Rollers	-216.00
2002	(3) 22 In. 2 In. (5 cm) Diameter Machined Grooved Solid Front Rollers With Solid End Caps	In Base Price

2500B PrecisionCut Riding Greens Mower - Diesel
Continued

CODE	ATTACHMENT IDENTIFIER	DESCRIPTION	SUGGESTED LIST PRICE USD ($)
		REEL FRONT ROLLERS Continued...	
2003		(3) 22 In. 3 In. (7.6 cm) Diameter Spiral Grooved Front Rollers with Spiral End Caps *Not compatible if FTC / GTC installed.* *3 In. Diameter Front Rollers Raise the Minimum Height of Cut.*	456.00
2004		(3) 22 In. 2 In. (5 cm) Diameter Machined Grooved Wide Solid Front Rollers	-18.00
2005		(3) 22 In. 2 In. (5cm) MT Spiral Roller *NOT FOR USE ON GREENS. Roller used to help reduce roller overlaps in fairways. For best results install in front and rear roller location of cutting unit.*	348.00
2006		(3) 22 In. 2 In. (5cm) MT Grooved Roller *NOT FOR USE ON GREENS. Roller used to help reduce roller overlaps in fairways. For best results install in front and rear roller location of cutting unit.*	348.00
2010		Less Front Rollers	-684.00
		REEL REAR ROLLERS	
2501		(3) 22 In. 2 In. (5 cm) Diameter Wide Tube/Hollow Smooth Rollers	In Base Price
2502		(3) 22 In. 2 In. (5cm) MT Spiral Roller *NOT FOR USE ON GREENS. Roller used to help reduce roller overlaps in fairways. For best results install in front and rear roller location of cutting unit.*	564.00
2503		(3) 22 In. 2 In. (5cm) MT Grooved Roller *NOT FOR USE ON GREENS. Roller used to help reduce roller overlaps in fairways. For best results install in front and rear roller location of cutting unit.*	564.00
2510		Less Rear Rollers	-468.00
		WHEELS WITH TIRES (THREE)	
3001		(3) Smooth Floatation Tires and Wheels (18x10.50-10)	In Base Price
3002		(3) Smooth Tires and Wheels (20x10.00-10)	11.00
3003		(3) Turf Guard Traction Tires and Wheels (20x10.00-10)	33.00
3004		(3) Smooth Tires and Wheels (20x10.00-10) 4 Ply Rated *Lowest Recommended Tire pressure 15 PSI (1.03 bar). Due to higher pressures may cause marking on soft greens.*	11.00
3010		Less Wheels with Tires	-425.00
		REEL CUTTING UNIT COUNTER WEIGHTS	
4001		(3) Cutting Unit ONLY Counter Weight Kit *Needed if NOT installing Rear Roller Power Brush or GTC/FTC Kits.*	In Base Price
4002		(3) QA5 Cutting Unit Brush Only Counter Weight Kit *Needed if only installing Rear Roller Power Brush on cutting unit.*	216.00
4003		(3) QA5 Cutting Unit FTC/GTC ONLY Counter Weight Kit *Needed if ONLY installing FTC/GTC on cutting unit.*	Same Price
4010		Less Counter Weight kit *Ordered if Both Rear Roller Power Brush and FTC/GTC Kit Installed.*	-174.00

2500B PrecisionCut Riding Greens Mower - Diesel
Continued

CODE	ATTACHMENT IDENTIFIER	DESCRIPTION	SUGGESTED LIST PRICE USD ($)
		REEL CUTTING UNIT COUNTER WEIGHTS Continued...	
		REEL CUTTING UNIT ATTACHING YOKES	
5001		(3) 22 Inch Cutting Unit Attaching Yokes *Needed to attach 2009 cutting units to 2009 traction machine.*	In Base Price
5002		(3) 22 Inch Cutting Unit Rear Attaching Point Yoke for FAIRWAYS *These yokes attach at the rear of the cutting unit and are for units used in fairway applications (not recommended for greens).*	789.00
5010		Less Cutting Yokes	-549.00
		ATTACHMENTS - ORDER AS DESIRED	
		CE Kit:	
9330		Battery Label Kit *This kit must be ordered to meet battery labeling requirement in Brazil.*	No Charge
		Cutting Units:	
9010		(3) QA5 22 In. Vertical Cutting Unit With Front Roller Less Motor	6,603.00
		European CE Kit	
9100		European CE Conversion Kit for 2500B Riding Greens Mower - Diesel *Must be Ordered to Receive a 2500B Riding Greens Mower - Diesel Which Meets CE Mark Requirements. Kit Includes Locking Hood Latch, Pictorial Decals and Operator's Manuals in English, French, German, Spanish and Italian.*	20.00
9101		European CE Conversion Kit for 7 and 11 Blade Cutting Units *Must be ordered to receive decals that convert (3) 7 or 11 Blade Cutting Units to meet CE Mark requirements.*	No Charge
9350		Compliance Kit *This kit must be ordered to meet the EU country of France shielding regulations.*	47.00
		Miscellaneous:	
9015		(3) 22 In. Fairway Tender Conditioners (FTC) Shaft and Blades *Requires order code 9016.*	1,395.00
9016		(3) GTC/FTC Gear Drive *Requires order code 9015.*	3,591.00
9017		(3) 22 In. Rear Roller Power Brushes *Requires order code 9018.*	396.00
9018		(3) Rear Roller Power Brush Drive *Requires order code 9017.*	1,083.00
9019		(3) 22 In. Front Rotary Turf Brush *Cannot be used with FTC/GTC.* *Also requires gear drive.*	588.00
9020		(3) 22 In. Greens Tender Conditioner (GTC) Shaft and Blades *Requires order code 9016.*	792.00
9025		(3) Smooth Roller Scrapers	45.00

2500B PrecisionCut Riding Greens Mower - Diesel
Continued

CODE	ATTACHMENT IDENTIFIER	DESCRIPTION	SUGGESTED LIST PRICE USD ($)
		ATTACHMENTS - ORDER AS DESIRED Continued...	
9070		(3) QA5 Grass Catcher Lip Extension *This kit extends the front lip of the Grass Catcher closer to the reel.*	27.00
9115		Greens Mower Convenience Kit *Contains Storage Area Pad and Elastic Storage Retainer.*	74.00
9910		Leak Detector Kit *For Serial No. TC250BG010001-.*	1,301.00
9801		(3) 22 In. Front Rotary DT Brush *Brush with helix design and increased bristles; Cannot be used with GTC/FTC. Also need to order Gear Drive.*	588.00
9803		(3) QA5 Eleven Blade 22 In. Cutting Units less front and rear rollers	6,672.00
9804		(3) QA5 Seven Blade 22 In. Cutting Units less front and rear rollers	6,426.00
		ATTACHMENTS FOR FIELD CONVERSION	
		Bedknives	
	ET17532	Bedknife, 4.8mm Fairway	See Parts
	MT7351	Bedknife, 2.0mm Ultra Low Cut	See Parts
	ET17534	Bedknife, 2.5mm Tournament	See Parts
	ET17533	Bedknife, 3.2 mm	See Parts
	ET11066	Bedknife, 3.2 mm with Hardened Insert	See Parts
	ET17767	Bedknife, Hi-cut Fairway 7.6 mm	See Parts
		Cutting Units:	
	BM22460	(1) QA5 22 In. Vertical Cutting Unit With Front Roller Less Motor	2,355.07
	BM24130	(1) QA5 Eleven Blade 22 In. Cutting Unit w/Adjustable 2.0 mm Bedknife, Less Front and Rear Roller & Motor	2,379.69
	BM24129	(1) QA5 Seven Blade 22 In. Heavy Section Blade Cutting Unit With Adjustable 4.8 mm Bedknife, Less Yokes, Front and Rear Roller & Motor	2,291.94
		Engine:	
	TCA19916	B20 Biodiesel Conversion Kit *This kit converts one machine to use B20 Diesel fuel.*	See Parts
		European CE Kit:	
	TCB11729	Compliance Kit *This kit must be ordered to meet the EU country of France shielding regulations.*	50.29
		Miscellaneous:	
	BM22671	(1) 22 In. Fairway Tender Conditioners (FTC) Shaft and Blades *Requires GTC/FTC Gear Drive (BM22469).*	497.56
	BM22761	(1) 22 In. Front Rotary Turf Brush	209.71

2500B PrecisionCut Riding Greens Mower - Diesel
Continued

CODE	ATTACHMENT IDENTIFIER	DESCRIPTION	SUGGESTED LIST PRICE USD ($)
		ATTACHMENTS FOR FIELD CONVERSION Continued...	
	BM22471	(1) 22 In. Greens Tender Conditioner (GTC) Shaft and Blades *Requires GTC/FTC Gear Drive.*	282.49
	BM22668	(1) 22 In. Rear Roller Power Brush *Requires Rear Roller Power Brush Drive (BM22527).*	141.24
	BM22995	(1) 22 In. Smooth Roller Scraper	16.06
	BM22469	(1) GTC/FTC Gear Drive	1,280.79
	BM24730	(1) QA5 22 In. Front Rotary DT Brush *Brush with helix design and increased bristles; Cannot be used with GTC/FTC. Also need to order Gear Drive.*	209.71
	BM23910	(1) QA5 Grass Catcher Lip Extension *This kit extends the front lip of the grass catcher closer to the reel.*	9.63
	BM22527	(1) Rear Roller Power Brush Drive *Requires 22 In. Rear Roller Power Brush (BM22668).*	386.27
	BTC10122	(3) 22 Inch Cutting Unit Rear Attaching Point Yoke Kit for FAIRWAYS *These yokes attach at the rear of the cutting unit and are for units used in fairway applications one (1) kit needed per machine.*	1,431.66
	TCA19547	2"x 22" Machine Grooved Roller Scraper	See Parts
	BM23002	3"X22" GROOVE ROLLER SCRAPER *Not compatible with Fairway Tender Conditioners (FTC).* *Can be used on QA5 Cutting units by ordering (1) TCA19597 for each scraper from parts. Requires 3 for 2500's and 5 for Fairway mowers.*	146.59
	AMT2477	Arm Rest Kit (Includes One Arm Rest and Hardware)	See Parts
	BM23080	Cutting Unit Top Shield Extension (Set of 3)	84.53
	TCB11356	Cutting Unit Yokes Kit (22") for MY1998-2008	817.49
	TCB11341	Cutting Unit Yokes Kit for MY 2009 # Current or QA5 Cutting Units	587.43
	BM19744	Dew Whip Holder Bracket	63.13
	BTC10606	Grass Catcher Mounting Kit *Mounting Hardware for complete machine.*	143.39
	BTC10216	Grass Catcher with large paddle clip (22 Low Profile) *2 needed for complete machine for 2500#s.* *2 needed for rear locations for Fairway Mowers 7700/8700.* *1 needed for 180 & 220 E-Cut Hybrid Walk Greens Mower.*	175.49
	BM19739	Greens Mower Convenience Kit *Contains Storage Area Pad and Elastic Storage Retainer.*	79.19
	AMT2978	Height of Cut Gauge Bar	See Parts
	TCB11710	Large E-Crate Cover	See Parts

2500B PrecisionCut Riding Greens Mower - Diesel
Continued

CODE	ATTACHMENT IDENTIFIER	DESCRIPTION	SUGGESTED LIST PRICE USD ($)
		ATTACHMENTS FOR FIELD CONVERSION Continued...	
	TCB11165	Leak Detector Kit *For Serial No. TC250BG010001-Current Models*	1,392.07
	BM19746	Light Kit, Front	243.96
	BM19852	Light Kit, Rear Grass Catcher *Mounting Hardware and Wiring with One Light.*	53.50
	BM24199	QA5 Grass Catcher Side Plate Insert *2 Needed for complete machine 2500's.* *1 Needed for front center location for 7500/8500 Fairway Mowers.* *1 Needed for 180 & 220 E-Cut Hybrid Walk Greens Mowers.* *3 Needed for front 8000 E-Cut Hybrid Fairway Mower.*	47.09
	BTC10407	Rear Grass Catcher Bail Kit *Mounting Bail needed for rear cutting unit 1 needed per machine.*	153.01
	BTC10408	Rear Grass Catcher with Handles *Requires 2 for complete machine & rear grass catcher bail system BTC10501.*	142.31
	TCB11167	Third Wheel Assist Kit	2,455.66
	BM19750	Tires and Wheels (18x10.50-10), (3) Smooth Floatation	454.76
	BM19748	Tires and Wheels (20x10.00-10), (3) Smooth	466.51
	BTC10071	Tires and Wheels (20x10.00-10), (3) Smooth 4 Ply-Rated *Lowest Recommended Tire pressure 15 PSI (1.03 bar). Due to higher pressures may cause marking on soft greens.*	466.51
	BM19749	Tires and Wheels (20x10.00-10), (3) Turf Guard Traction	490.06
		Reel Cutting Unit Counter Weights	
	BM22762	(1) Cutting Unit ONLY Counter Weight Kit *Needed if NOT installing Rear Roller Power Brush or GTC / FTC Kits.*	62.06
	BM22705	(1) QA5 Cutting Unit Brush Only Counter Weight Kit *Needed if only installing Rear Roller Power Brush on cutting unit.*	139.10
	BM22704	(1) QA5 FTC/GTC ONLY Counter Weight Kit *Needed if ONLY installing FTC/GTC on cutting unit.*	62.06
		Rollers:	
	BM18712	(1) 22 In. 2 In. (5 cm) Diameter Machined Grooved Solid Front Roller With Solid End Caps	243.96
	BM18481	(1) 22 In. 2 In. (5 cm) Diameter Machined Grooved Wide Solid Front Roller	237.54
	BE23416	(1) 22 In. 2 In. (5 cm) Diameter Machined Grooved Solid Front Roller *This Roller is 20mm Shorter Than BM18481.*	222.56
	BM18480	(1) 22 In. 2 In. (5 cm) Diameter Wide Tube/Hollow Smooth Roller *For use on Greens.*	166.91

2500B PrecisionCut Riding Greens Mower - Diesel
Continued

CODE	ATTACHMENT IDENTIFIER	DESCRIPTION	SUGGESTED LIST PRICE USD ($)
		ATTACHMENTS FOR FIELD CONVERSION Continued...	
	BTC10267	(1) 22 In. 2 In. (5cm) MT Grooved Roller	368.09
	BM17668	(1) 22 In. 3 In. (7.6 cm) Diameter Heavy Duty Grooved Disc Front Roller *Not compatible if FTC / GTC installed.* *3 In. Diameter Front Rollers Raise the Minimum Height of Cut.*	335.99
	BM19817	(1) 22 In. 3 In. (7.6 cm) Diameter Spiral Grooved Front Roller With Spiral End Caps *Not compatible if FTC / GTC installed.* *3 In. Diameter Front Rollers Raise the Minimum Height of Cut.*	406.60
	BM23566	(1) 2X22" MT SPIRAL Roller *Roller used to help reduce roller overlaps in fairways. For best results install in front and rear roller location of cutting unit.*	368.09

2500E E-Cut Hybrid Riding Greens Mower - Gas

Equipment for Base Machine

21.0 hp (15.7 kW) at 3600 rpm, Engine Manufacturer Gross Power, Tested in accordance with SAE J1995. The engine horsepower and torque information are provided by the engine manufacturer to be used for comparison purposes only. Actual operating horsepower and torque will be less. Refer to the engine manufacturers web site for additional information.

Foot Actuated Adjustable Tilt Steering Wheel
Deluxe Seat
2-Post SAE J21294 Roll Over Protection Structure with Seat Belts
Command Arm Operator Controls
Four Function LED Warning Monitor with Hour Meter
One Touch Hand Lift Lever
Hand Operated Mow/Transport Lever
Direct Mounted Pumps
Power Steering
Hydrostatic Drive
Single Reel Pump
Electric Reel Motors
Offset Reel Design
Quik-Tatch Cutting Units with Adjustable Extension Shields
Quick Adjust QA5 Cutting Units with Speed Link Height of Cut System
Dual Point Adjustable Bed Knife with Notch Adjustments
Double Upstops for Front Cutting Units
Machined Grooved Solid Front Rollers with Solid End Caps
22 In. 2 In. (5 cm) Diameter Wide Tube/Hollow Smooth Rear Rollers
Sit on Seat Diagnostics
White Box Controller
Micro-Lap Backlapping Valve and Reel Speed Control
Disk Brakes
Hydraulic Oil Cooler
18X10.50-10 2 Ply Smooth Floatation Tires
Single Fuel Tank, 7.9 Gallon (30L) Fuel Capacity
BCI Group 40 Maintenance Free Battery
John Deere Golf Operator Videos and All Products Safety Video DVD Set

CODE	ATTACHMENT IDENTIFIER	DESCRIPTION	SUGGESTED LIST PRICE USD ($)

Select One Code From Each Required Category

BASE MACHINE

F.O.B. Raleigh, North Carolina

1215TC	2500E E-Cut Hybrid Riding Greens Mower - Gas	34,610.00

REEL CUTTING UNITS

1003	(3) Vertical Cutting Units With Front AND Rear Rollers and Molded One-Piece Grass Catchers with large paddle clip and Grass Catcher Side Plate Insert, Rear catcher and bail system	-69.00
1004	(3) Quick Adjust 5 (QA5) Seven Blade 22 In. (55.9 cm) Heavy Section Cutting Units With Adjustable 4.8mm Bedknife, 5 In. (12.7 cm) Diameter Reels and Molded One-Piece Grass Catchers with large paddle clip and Grass Catcher Side Plate Insert, Rear catcher and bail system, Less Front and Rear Rollers	-246.00
1005	(3) Quick Adjust 5 (QA5) Eleven Blade 22 In. (55.9 cm) Cutting Units With Adjustable 2.0mm Bedknife, 5 In. (12.7 cm) Diameter Reels and Molded One-Piece Grass Catchers with large paddle clip and Grass Catcher Side Plate Insert, Rear catcher and bail system, Less Front and Rear Rollers	In Base Price
1010	Less Cutting Units and Grass Catchers with large paddle clip	-7,498.00

REEL FRONT ROLLERS

2001	(3) 22 In. 2 In. (5 cm) Diameter Wide Tube/Hollow Smooth Front Rollers	-216.00
2002	(3) 22 In. 2 In. (5 cm) Diameter Machined Grooved Solid Front Rollers With Solid End Caps	In Base Price

2500E E-Cut Hybrid Riding Greens Mower - Gas
Continued

CODE	ATTACHMENT IDENTIFIER	DESCRIPTION	SUGGESTED LIST PRICE USD ($)
		REEL FRONT ROLLERS Continued...	
2003		(3) 22 In. 3 In. (7.6 cm) Diameter Spiral Grooved Front Rollers with Spiral End Caps *Not compatible if FTC / GTC installed.* *3 In. Diameter Front Rollers Raise the Minimum Height of Cut.*	456.00
2004		(3) 22 In. 2 In. (5 cm) Diameter Machined Grooved Wide Solid Front Rollers	-18.00
2005		(3) 22 In. 2 In. (5cm) MT Spiral Roller *NOT FOR USE ON GREENS. Roller used to help reduce roller overlaps in fairways. For best results install in front and rear roller location of cutting unit.*	348.00
2006		(3) 22 In. 2 In. (5cm) MT Grooved Roller *NOT FOR USE ON GREENS. Roller used to help reduce roller overlaps in fairways. For best results install in front and rear roller location of cutting unit.*	348.00
2010		Less Front Rollers	-684.00
		REEL REAR ROLLERS	
2501		(3) 22 In. 2 In. (5 cm) Diameter Wide Tube/Hollow Smooth Rollers	In Base Price
2502		(3) 22 In. 2 In. (5cm) MT Spiral Roller *NOT FOR USE ON GREENS. Roller used to help reduce roller overlaps in fairways. For best results install in front and rear roller location of cutting unit.*	564.00
2503		(3) 22 In. 2 In. (5cm) MT Grooved Roller *NOT FOR USE ON GREENS. Roller used to help reduce roller overlaps in fairways. For best results install in front and rear roller location of cutting unit.*	564.00
2510		Less Rear Rollers	-468.00
		WHEELS WITH TIRES (THREE)	
3001		(3) Smooth Floatation Tires and Wheels (18x10.50-10)	In Base Price
3002		(3) Smooth Tires and Wheels (20x10.00-10)	11.00
3003		(3) Turf Guard Traction Tires and Wheels (20x10.00-10)	33.00
3004		(3) Smooth Tires and Wheels (20x10.00-10) 4 Ply Rated *Lowest Recommended Tire pressure 15 PSI (1.03 bar). Due to higher pressures may cause marking on soft greens.*	11.00
3010		Less Wheels with Tires	-425.00
		REEL CUTTING UNIT COUNTER WEIGHTS	
4001		(3) Cutting Unit ONLY Counter Weight Kit *Needed if NOT installing Rear Roller Power Brush or GTC/FTC Kits.*	In Base Price
4002		(3) QA5 Cutting Unit Brush Only Counter Weight Kit *Needed if only installing Rear Roller Power Brush on cutting unit.*	216.00
4003		(3) QA5 Cutting Unit FTC/GTC ONLY Counter Weight Kit	Same Price

2500E E-Cut Hybrid Riding Greens Mower - Gas
Continued

CODE	ATTACHMENT IDENTIFIER	DESCRIPTION	SUGGESTED LIST PRICE USD ($)
		REEL CUTTING UNIT COUNTER WEIGHTS Continued...	
4010		Less Counter Weight kit *Ordered if Both Rear Roller Power Brush and FTC/GTC Kit Installed.*	-174.00
		REEL CUTTING UNIT ATTACHING YOKES	
5001		(3) 22 Inch Cutting Unit Attaching Yokes *Needed to attach 2009 cutting units to 2009 traction machine.*	In Base Price
5002		(3) 22 Inch Cutting Unit Rear Attaching Point Yoke for FAIRWAYS *These yokes attach at the rear of the cutting unit and are for units used in fairway applications (not recommended for greens).*	789.00
5010		Less Cutting Yokes	-549.00
		ATTACHMENTS - ORDER AS DESIRED	
		CE Kit:	
9330		Battery Label Kit *This kit must be ordered to meet battery labeling requirement in Brazil.*	No Charge
		Cutting Units:	
9010		(3) QA5 22 In. Vertical Cutting Unit With Front Roller Less Motor	6,603.00
		Miscellaneous:	
9015		(3) 22 In. Fairway Tender Conditioners (FTC) Shaft and Blades *Requires order code 9016.*	1,395.00
9016		(3) GTC/FTC Gear Drive *Requires order code 9015.*	3,591.00
9017		(3) 22 In. Rear Roller Power Brushes *Requires order code 9018.*	396.00
9018		(3) Rear Roller Power Brush Drive *Requires order code 9017.*	1,083.00
9019		(3) 22 In. Front Rotary Turf Brush *Cannot be used with FTC/GTC.* *Also requires gear drive.*	588.00
9020		(3) 22 In. Greens Tender Conditioner (GTC) Shaft and Blades *Requires order code 9016.*	792.00
9025		(3) Smooth Roller Scrapers	45.00
9070		(3) QA5 Grass Catcher Lip Extension *This kit extends the front lip of the Grass Catcher closer to the reel.*	27.00
9115		Greens Mower Convenience Kit *Contains Storage Area Pad and Elastic Storage Retainer.*	74.00
9910		Leak Detector Kit *For Serial No. TC250BG010001-.*	1,301.00
9801		(3) 22 In. Front Rotary DT Brush *Brush with helix design and increased bristles; Cannot be used with GTC/FTC. Also need to order Gear Drive.*	588.00

2500E E-Cut Hybrid Riding Greens Mower - Gas

Continued

CODE	ATTACHMENT IDENTIFIER	DESCRIPTION	SUGGESTED LIST PRICE USD ($)
		ATTACHMENTS - ORDER AS DESIRED Continued...	
9803		(3) QA5 Eleven Blade 22 In. Cutting Units less front and rear rollers	6,672.00
9804		(3) QA5 Seven Blade 22 In. Cutting Units less front and rear rollers	6,426.00
		ATTACHMENTS FOR FIELD CONVERSION	
		Bedknives	
	ET17532	Bedknife, 4.8mm Fairway	See Parts
	MT7351	Bedknife, 2.0mm Ultra Low Cut	See Parts
	ET17534	Bedknife, 2.5mm Tournament	See Parts
	ET17533	Bedknife, 3.2 mm	See Parts
	ET11066	Bedknife, 3.2 mm with Hardened Insert	See Parts
	ET17767	Bedknife, Hi-cut Fairway 7.6 mm	See Parts
		Cutting Units:	
	BM22460	(1) QA5 22 In. Vertical Cutting Unit With Front Roller Less Motor	2,355.07
	BM24130	(1) QA5 Eleven Blade 22 In. Cutting Unit w/Adjustable 2.0 mm Bedknife, Less Front and Rear Roller & Motor	2,379.69
	BM24129	(1) QA5 Seven Blade 22 In. Heavy Section Blade Cutting Unit With Adjustable 4.8 mm Bedknife, Less Yokes, Front and Rear Roller & Motor	2,291.94
		European CE Kit:	
	TCB11729	Compliance Kit *This kit must be ordered to meet the EU country of France shielding regulations.*	50.29
		Miscellaneous:	
	BM22671	(1) 22 In. Fairway Tender Conditioners (FTC) Shaft and Blades *Requires GTC/FTC Gear Drive (BM22469).*	497.56
	BM22761	(1) 22 In. Front Rotary Turf Brush	209.71
	BM22471	(1) 22 In. Greens Tender Conditioner (GTC) Shaft and Blades *Requires GTC/FTC Gear Drive.*	282.49
	BM22668	(1) 22 In. Rear Roller Power Brush *Requires Rear Roller Power Brush Drive (BM22527).*	141.24
	BM22995	(1) 22 In. Smooth Roller Scraper	16.06
	BM22469	(1) GTC/FTC Gear Drive	1,280.79
	BM24730	(1) QA5 22 In. Front Rotary DT Brush *Brush with helix design and increased bristles; Cannot be used with GTC/FTC. Also need to order Gear Drive.*	209.71
	BM23910	(1) QA5 Grass Catcher Lip Extension *This kit extends the front lip of the grass catcher closer to the reel.*	9.63

2500E E-Cut Hybrid Riding Greens Mower - Gas

Continued

CODE	ATTACHMENT IDENTIFIER	DESCRIPTION	SUGGESTED LIST PRICE USD ($)
		ATTACHMENTS FOR FIELD CONVERSION Continued...	
	BM22527	(1) Rear Roller Power Brush Drive *Requires 22 In. Rear Roller Power Brush (BM22668).*	386.27
	BTC10122	(3) 22 Inch Cutting Unit Rear Attaching Point Yoke Kit for FAIRWAYS *These yokes attach at the rear of the cutting unit and are for units used in fairway applications one (1) kit needed per machine.*	1,431.66
	TCA19547	2"x 22" Machine Grooved Roller Scraper	See Parts
	BM23002	3"X22" GROOVE ROLLER SCRAPER *Not compatible with Fairway Tender Conditioners (FTC).* *Can be used on QA5 Cutting units by ordering (1) TCA19597* *for each scraper from parts. Requires 3 for 2500's* *and 5 for Fairway mowers.*	146.59
	AMT2477	Arm Rest Kit (Includes One Arm Rest and Hardware)	See Parts
	BM23080	Cutting Unit Top Shield Extension (Set of 3)	84.53
	TCB11356	Cutting Unit Yokes Kit (22") for MY1998-2008	817.49
	TCB11341	Cutting Unit Yokes Kit for MY 2009 # Current or QA5 Cutting Units	587.43
	BM19744	Dew Whip Holder Bracket	63.13
	BTC10606	Grass Catcher Mounting Kit *Mounting Hardware for complete machine.*	143.39
	BTC10216	Grass Catcher with large paddle clip (22 Low Profile) *2 needed for complete machine for 2500#s.* *2 needed for rear locations for Fairway Mowers 7700/8700.* *1 needed for 180 & 220 E-Cut Hybrid Walk Greens Mower.*	175.49
	BM19739	Greens Mower Convenience Kit *Contains Storage Area Pad and Elastic Storage Retainer.*	79.19
	AMT2978	Height of Cut Gauge Bar	See Parts
	TCB11710	Large E-Crate Cover	See Parts
	TCB11165	Leak Detector Kit *For Serial No. TC250BG010001-Current Models*	1,392.07
	BM19746	Light Kit, Front	243.96
	BM19852	Light Kit, Rear Grass Catcher *Mounting Hardware and Wiring with One Light.*	53.50
	BM24199	QA5 Grass Catcher Side Plate Insert *2 Needed for complete machine 2500's.* *1 Needed for front center location for 7500/8500 Fairway Mowers.* *1 Needed for 180 & 220 E-Cut Hybrid Walk Greens Mowers.* *3 Needed for front 8000 E-Cut Hybrid Fairway Mower.*	47.09
	BTC10407	Rear Grass Catcher Bail Kit *Mounting Bail needed for rear cutting unit 1 needed per machine.*	153.01

2500E E-Cut Hybrid Riding Greens Mower - Gas
Continued

CODE	ATTACHMENT IDENTIFIER	DESCRIPTION	SUGGESTED LIST PRICE USD ($)
		ATTACHMENTS FOR FIELD CONVERSION Continued...	
	BTC10408	Rear Grass Catcher with Handles *Requires 2 for complete machine & rear grass catcher bail system BTC10501.*	142.31
	TCB11167	Third Wheel Assist Kit	2,455.66
	BM19750	Tires and Wheels (18x10.50-10), (3) Smooth Floatation	454.76
	BM19748	Tires and Wheels (20x10.00-10), (3) Smooth	466.51
	BTC10071	Tires and Wheels (20x10.00-10), (3) Smooth 4 Ply-Rated *Lowest Recommended Tire pressure 15 PSI (1.03 bar). Due to higher pressures may cause marking on soft greens.*	466.51
	BM19749	Tires and Wheels (20x10.00-10), (3) Turf Guard Traction	490.06
		Reel Cutting Unit Counter Weights	
	BM22762	(1) Cutting Unit ONLY Counter Weight Kit *Needed if NOT installing Rear Roller Power Brush or GTC / FTC Kits.*	62.06
	BM22705	(1) QA5 Cutting Unit Brush Only Counter Weight Kit *Needed if only installing Rear Roller Power Brush on cutting unit.*	139.10
	BM22704	(1) QA5 FTC/GTC ONLY Counter Weight Kit *Needed if ONLY installing FTC/GTC on cutting unit.*	62.06
		Rollers:	
	BM18712	(1) 22 In. 2 In. (5 cm) Diameter Machined Grooved Solid Front Roller With Solid End Caps	243.96
	BM18481	(1) 22 In. 2 In. (5 cm) Diameter Machined Grooved Wide Solid Front Roller	237.54
	BE23416	(1) 22 In. 2 In. (5 cm) Diameter Machined Grooved Solid Front Roller *This Roller is 20mm Shorter Than BM18481.*	222.56
	BM18480	(1) 22 In. 2 In. (5 cm) Diameter Wide Tube/Hollow Smooth Roller *For use on Greens.*	166.91
	BTC10267	(1) 22 In. 2 In. (5cm) MT Grooved Roller	368.09
	BM17668	(1) 22 In. 3 In. (7.6 cm) Diameter Heavy Duty Grooved Disc Front Roller *Not compatible if FTC / GTC installed.* *3 In. Diameter Front Rollers Raise the Minimum Height of Cut.*	335.99
	BM19817	(1) 22 In. 3 In. (7.6 cm) Diameter Spiral Grooved Front Roller With Spiral End Caps *Not compatible if FTC / GTC installed.* *3 In. Diameter Front Rollers Raise the Minimum Height of Cut.*	406.60
	BM23566	(1) 2X22" MT SPIRAL Roller *Roller used to help reduce roller overlaps in fairways. For best results install in front and rear roller location of cutting unit.*	368.09

2500E E-Cut Hybrid Riding Greens Mower - Diesel

Equipment for Base Machine

19.6 hp (14.6 kW) per SAE J1995 Engine hp is provided by the engine manufacturer to be used for comparison purposes only. Actual operating hp will be less. Refer to the engine manufacturer#s web site for additional information.

Foot Actuated Adjustable Tilt Steering Wheel
Deluxe Seat
2-Post SAE J21294 Roll Over Protection Structure with Seat Belts
Command Arm Operator Controls
Four Function LED Warning Monitor with Hour Meter
One Touch Hand Lift Lever
Hand Operated Mow/Transport Lever
Direct Mounted Pumps
Power Steering
Hydrostatic Drive
Single Reel Pump
Electric Reel Motors
Offset Reel Design
Quik-Tatch Cutting Units with Adjustable Extension Shields
Quick Adjust QA5 Cutting Units with Speed Link Height of Cut System
Dual Point Adjustable Bed Knife with Notch Adjustments
Double Upstops for Front Cutting Units
Machined Grooved Solid Front Rollers with Solid End Caps
22 In. 2 In. (5 cm) Diameter Wide Tube/Hollow Smooth Rear Rollers
Sit on Seat Diagnostics
White Box Controller
Micro-Lap Backlapping Valve and Reel Speed Control
Disk Brakes
Hydraulic Oil Cooler
18X10.50-10 2 Ply Smooth Floatation Tires
Single Fuel Tank, 7.9 Gallon (30L) Fuel Capacity
BCI Group 40 Maintenance Free Battery
John Deere Golf Operator Videos and All Products Safety Video DVD Set

CODE	ATTACHMENT IDENTIFIER	DESCRIPTION	SUGGESTED LIST PRICE USD ($)

Select One Code From Each Required Category

BASE MACHINE

F.O.B. Raleigh, North Carolina

1194TC		2500E E-Cut Hybrid Riding Greens Mower - Diesel	40,592.00

REEL CUTTING UNITS

1003		(3) Vertical Cutting Units With Front AND Rear Rollers and Molded One-Piece Grass Catchers with large paddle clip and Grass Catcher Side Plate Insert, Rear catcher and bail system	-69.00
1004		(3) Quick Adjust 5 (QA5) Seven Blade 22 In. (55.9 cm) Heavy Section Cutting Units With Adjustable 4.8mm Bedknife, 5 In. (12.7 cm) Diameter Reels and Molded One-Piece Grass Catchers with large paddle clip and Grass Catcher Side Plate Insert, Rear catcher and bail system, Less Front and Rear Rollers	-246.00
1005		(3) Quick Adjust 5 (QA5) Eleven Blade 22 In. (55.9 cm) Cutting Units With Adjustable 2.0mm Bedknife, 5 In. (12.7 cm) Diameter Reels and Molded One-Piece Grass Catchers with large paddle clip and Grass Catcher Side Plate Insert, Rear catcher and bail system, Less Front and Rear Rollers	In Base Price
1010		Less Cutting Units and Grass Catchers with large paddle clip	-7,498.00

REEL FRONT ROLLERS

2001		(3) 22 In. 2 In. (5 cm) Diameter Wide Tube/Hollow Smooth Front Rollers	-216.00
2002		(3) 22 In. 2 In. (5 cm) Diameter Machined Grooved Solid Front Rollers With Solid End Caps	In Base Price

2500E E-Cut Hybrid Riding Greens Mower - Diesel
Continued

CODE	ATTACHMENT IDENTIFIER	DESCRIPTION	SUGGESTED LIST PRICE USD ($)
		REEL FRONT ROLLERS Continued...	
2003		(3) 22 In. 3 In. (7.6 cm) Diameter Spiral Grooved Front Rollers with Spiral End Caps *Not compatible if FTC / GTC installed.* *3 In. Diameter Front Rollers Raise the Minimum Height of Cut.*	456.00
2004		(3) 22 In. 2 In. (5 cm) Diameter Machined Grooved Wide Solid Front Rollers	-18.00
2005		(3) 22 In. 2 In. (5cm) MT Spiral Roller *NOT FOR USE ON GREENS. Roller used to help reduce roller overlaps in fairways. For best results install in front and rear roller location of cutting unit.*	348.00
2006		(3) 22 In. 2 In. (5cm) MT Grooved Roller *NOT FOR USE ON GREENS. Roller used to help reduce roller overlaps in fairways. For best results install in front and rear roller location of cutting unit.*	348.00
2010		Less Front Rollers	-684.00
		REEL REAR ROLLERS	
2501		(3) 22 In. 2 In. (5 cm) Diameter Wide Tube/Hollow Smooth Rollers	In Base Price
2502		(3) 22 In. 2 In. (5cm) MT Spiral Roller *NOT FOR USE ON GREENS. Roller used to help reduce roller overlaps in fairways. For best results install in front and rear roller location of cutting unit.*	564.00
2503		(3) 22 In. 2 In. (5cm) MT Grooved Roller *NOT FOR USE ON GREENS. Roller used to help reduce roller overlaps in fairways. For best results install in front and rear roller location of cutting unit.*	564.00
2510		Less Rear Rollers	-468.00
		WHEELS WITH TIRES (THREE)	
3001		(3) Smooth Floatation Tires and Wheels (18x10.50-10)	In Base Price
3002		(3) Smooth Tires and Wheels (20x10.00-10)	11.00
3003		(3) Turf Guard Traction Tires and Wheels (20x10.00-10)	33.00
3004		(3) Smooth Tires and Wheels (20x10.00-10) 4 Ply Rated *Lowest Recommended Tire pressure 15 PSI (1.03 bar). Due to higher pressures may cause marking on soft greens.*	11.00
3010		Less Wheels with Tires	-425.00
		REEL CUTTING UNIT COUNTER WEIGHTS	
4001		(3) Cutting Unit ONLY Counter Weight Kit *Needed if NOT installing Rear Roller Power Brush or GTC/FTC Kits.*	In Base Price
4002		(3) QA5 Cutting Unit Brush Only Counter Weight Kit *Needed if only installing Rear Roller Power Brush on cutting unit.*	216.00
4003		(3) QA5 Cutting Unit FTC/GTC ONLY Counter Weight Kit	Same Price

2500E E-Cut Hybrid Riding Greens Mower - Diesel
Continued

CODE	ATTACHMENT IDENTIFIER	DESCRIPTION	SUGGESTED LIST PRICE USD ($)
		REEL CUTTING UNIT COUNTER WEIGHTS Continued...	
4010		Less Counter Weight kit *Ordered if Both Rear Roller Power Brush and FTC/GTC Kit Installed.*	-174.00
		REEL CUTTING UNIT ATTACHING YOKES	
5001		(3) 22 Inch Cutting Unit Attaching Yokes *Needed to attach 2009 cutting units to 2009 traction machine.*	In Base Price
5002		(3) 22 Inch Cutting Unit Rear Attaching Point Yoke for FAIRWAYS *These yokes attach at the rear of the cutting unit and are for units used in fairway applications (not recommended for greens).*	789.00
5010		Less Cutting Yokes	-549.00
		ATTACHMENTS - ORDER AS DESIRED	
		CE Kit:	
9330		Battery Label Kit *This kit must be ordered to meet battery labeling requirement in Brazil.*	No Charge
		Cutting Units:	
9010		(3) QA5 22 In. Vertical Cutting Unit With Front Roller Less Motor	6,603.00
		European CE Kit	
9100		European CE Conversion Kit for 2500E Hybrid Riding GreensMower - Diesel *Must be ordered to receive a 2500E Hybrid Riding GreensMower - Diesel which meets CE Mark requirements. Kit includes Locking Hood Latch, Pictorial Decals and Operator's Manuals in English, French, German, Spanish and Italian.*	20.00
9101		European CE Conversion Kit for 7 and 11 Blade Cutting Units *Must be ordered to receive decals that convert (3) 7 or 11 Blade Cutting Units to meet CE Mark requirements.*	No Charge
9350		Compliance Kit *This kit must be ordered to meet the EU country of France shielding regulations.*	47.00
		Miscellaneous:	
9015		(3) 22 In. Fairway Tender Conditioners (FTC) Shaft and Blades *Requires order code 9016.*	1,395.00
9016		(3) GTC/FTC Gear Drive *Requires order code 9015.*	3,591.00
9017		(3) 22 In. Rear Roller Power Brushes *Requires order code 9018.*	396.00
9018		(3) Rear Roller Power Brush Drive *Requires order code 9017.*	1,083.00
9019		(3) 22 In. Front Rotary Turf Brush *Cannot be used with FTC/GTC.* *Also requires gear drive.*	588.00
9020		(3) 22 In. Greens Tender Conditioner (GTC) Shaft and Blades *Requires order code 9016.*	792.00
9025		(3) Smooth Roller Scrapers	45.00

2500E E-Cut Hybrid Riding Greens Mower - Diesel

Continued

CODE	ATTACHMENT IDENTIFIER	DESCRIPTION	SUGGESTED LIST PRICE USD ($)
		ATTACHMENTS - ORDER AS DESIRED Continued...	
9070		(3) QA5 Grass Catcher Lip Extension *This kit extends the front lip of the Grass Catcher closer to the reel.*	27.00
9115		Greens Mower Convenience Kit *Contains Storage Area Pad and Elastic Storage Retainer.*	74.00
9910		Leak Detector Kit *For Serial No. TC250BG010001-.*	1,301.00
9801		(3) 22 In. Front Rotary DT Brush *Brush with helix design and increased bristles; Cannot be used with GTC/FTC. Also need to order Gear Drive.*	588.00
9803		(3) QA5 Eleven Blade 22 In. Cutting Units less front and rear rollers	6,672.00
9804		(3) QA5 Seven Blade 22 In. Cutting Units less front and rear rollers	6,426.00
		ATTACHMENTS FOR FIELD CONVERSION	
		Bedknives	
	ET17532	Bedknife, 4.8mm Fairway	See Parts
	MT7351	Bedknife, 2.0mm Ultra Low Cut	See Parts
	ET17534	Bedknife, 2.5mm Tournament	See Parts
	ET17533	Bedknife, 3.2 mm	See Parts
	ET11066	Bedknife, 3.2 mm with Hardened Insert	See Parts
	ET17767	Bedknife, Hi-cut Fairway 7.6 mm	See Parts
		Cutting Units:	
	BM22460	(1) QA5 22 In. Vertical Cutting Unit With Front Roller Less Motor	2,355.07
	BM24130	(1) QA5 Eleven Blade 22 In. Cutting Unit w/Adjustable 2.0 mm Bedknife, Less Front and Rear Roller & Motor	2,379.69
	BM24129	(1) QA5 Seven Blade 22 In. Heavy Section Blade Cutting Unit With Adjustable 4.8 mm Bedknife, Less Yokes, Front and Rear Roller & Motor	2,291.94
		Engine:	
	TCA19916	B20 Biodiesel Conversion Kit *This kit converts one machine to use B20 Diesel fuel.*	See Parts
		European CE Kit:	
	TCB11729	Compliance Kit *This kit must be ordered to meet the EU country of France shielding regulations.*	50.29
		Miscellaneous:	
	BM22671	(1) 22 In. Fairway Tender Conditioners (FTC) Shaft and Blades *Requires GTC/FTC Gear Drive (BM22469).*	497.56
	BM22761	(1) 22 In. Front Rotary Turf Brush	209.71

2500E E-Cut Hybrid Riding Greens Mower - Diesel
Continued

CODE	ATTACHMENT IDENTIFIER	DESCRIPTION	SUGGESTED LIST PRICE USD ($)
		ATTACHMENTS FOR FIELD CONVERSION Continued...	
	BM22471	(1) 22 In. Greens Tender Conditioner (GTC) Shaft and Blades *Requires GTC/FTC Gear Drive.*	282.49
	BM22668	(1) 22 In. Rear Roller Power Brush *Requires Rear Roller Power Brush Drive (BM22527).*	141.24
	BM22995	(1) 22 In. Smooth Roller Scraper	16.06
	BM22469	(1) GTC/FTC Gear Drive	1,280.79
	BM24730	(1) QA5 22 In. Front Rotary DT Brush *Brush with helix design and increased bristles; Cannot be used with GTC/FTC. Also need to order Gear Drive.*	209.71
	BM23910	(1) QA5 Grass Catcher Lip Extension *This kit extends the front lip of the grass catcher closer to the reel.*	9.63
	BM22527	(1) Rear Roller Power Brush Drive *Requires 22 In. Rear Roller Power Brush (BM22668).*	386.27
	BTC10122	(3) 22 Inch Cutting Unit Rear Attaching Point Yoke Kit for FAIRWAYS *These yokes attach at the rear of the cutting unit and are for units used in fairway applications one (1) kit needed per machine.*	1,431.66
	TCA19547	2"x 22" Machine Grooved Roller Scraper	See Parts
	BM23002	3"X22" GROOVE ROLLER SCRAPER *Not compatible with Fairway Tender Conditioners (FTC).* *Can be used on QA5 Cutting units by ordering (1) TCA19597 for each scraper from parts. Requires 3 for 2500's and 5 for Fairway mowers.*	146.59
	AMT2477	Arm Rest Kit (Includes One Arm Rest and Hardware)	See Parts
	BM23080	Cutting Unit Top Shield Extension (Set of 3)	84.53
	TCB11356	Cutting Unit Yokes Kit (22") for MY1998-2008	817.49
	TCB11341	Cutting Unit Yokes Kit for MY 2009 # Current or QA5 Cutting Units	587.43
	BM19744	Dew Whip Holder Bracket	63.13
	BTC10606	Grass Catcher Mounting Kit *Mounting Hardware for complete machine.*	143.39
	BTC10216	Grass Catcher with large paddle clip (22 Low Profile) *2 needed for complete machine for 2500#s.* *2 needed for rear locations for Fairway Mowers 7700/8700.* *1 needed for 180 & 220 E-Cut Hybrid Walk Greens Mower.*	175.49
	BM19739	Greens Mower Convenience Kit *Contains Storage Area Pad and Elastic Storage Retainer.*	79.19
	AMT2978	Height of Cut Gauge Bar	See Parts
	TCB11710	Large E-Crate Cover	See Parts

2500E E-Cut Hybrid Riding Greens Mower - Diesel
Continued

CODE	ATTACHMENT IDENTIFIER	DESCRIPTION	SUGGESTED LIST PRICE USD ($)
		ATTACHMENTS FOR FIELD CONVERSION Continued...	
	TCB11165	Leak Detector Kit *For Serial No. TC250BG010001-Current Models*	1,392.07
	BM19746	Light Kit, Front	243.96
	BM19852	Light Kit, Rear Grass Catcher *Mounting Hardware and Wiring with One Light.*	53.50
	BM24199	QA5 Grass Catcher Side Plate Insert *2 Needed for complete machine 2500's.* *1 Needed for front center location for 7500/8500 Fairway Mowers.* *1 Needed for 180 & 220 E-Cut Hybrid Walk Greens Mowers.* *3 Needed for front 8000 E-Cut Hybrid Fairway Mower.*	47.09
	BTC10407	Rear Grass Catcher Bail Kit *Mounting Bail needed for rear cutting unit 1 needed per machine.*	153.01
	BTC10408	Rear Grass Catcher with Handles *Requires 2 for complete machine & rear grass catcher bail system BTC10501.*	142.31
	TCB11167	Third Wheel Assist Kit	2,455.66
	BM19750	Tires and Wheels (18x10.50-10), (3) Smooth Floatation	454.76
	BM19748	Tires and Wheels (20x10.00-10), (3) Smooth	466.51
	BTC10071	Tires and Wheels (20x10.00-10), (3) Smooth 4 Ply-Rated *Lowest Recommended Tire pressure 15 PSI (1.03 bar). Due to higher pressures may cause marking on soft greens.*	466.51
	BM19749	Tires and Wheels (20x10.00-10), (3) Turf Guard Traction	490.06
		Reel Cutting Unit Counter Weights	
	BM22762	(1) Cutting Unit ONLY Counter Weight Kit *Needed if NOT installing Rear Roller Power Brush or GTC / FTC Kits.*	62.06
	BM22705	(1) QA5 Cutting Unit Brush Only Counter Weight Kit *Needed if only installing Rear Roller Power Brush on cutting unit.*	139.10
	BM22704	(1) QA5 FTC/GTC ONLY Counter Weight Kit *Needed if ONLY installing FTC/GTC on cutting unit.*	62.06
		Rollers:	
	BM18712	(1) 22 In. 2 In. (5 cm) Diameter Machined Grooved Solid Front Roller With Solid End Caps	243.96
	BM18481	(1) 22 In. 2 In. (5 cm) Diameter Machined Grooved Wide Solid Front Roller	237.54
	BE23416	(1) 22 In. 2 In. (5 cm) Diameter Machined Grooved Solid Front Roller *This Roller is 20mm Shorter Than BM18481.*	222.56
	BM18480	(1) 22 In. 2 In. (5 cm) Diameter Wide Tube/Hollow Smooth Roller *For use on Greens.*	166.91

2500E E-Cut Hybrid Riding Greens Mower - Diesel
Continued

CODE	ATTACHMENT IDENTIFIER	DESCRIPTION	SUGGESTED LIST PRICE USD ($)
		ATTACHMENTS FOR FIELD CONVERSION Continued...	
	BTC10267	(1) 22 In. 2 In. (5cm) MT Grooved Roller	368.09
	BM17668	(1) 22 In. 3 In. (7.6 cm) Diameter Heavy Duty Grooved Disc Front Roller *Not compatible if FTC / GTC installed.* *3 In. Diameter Front Rollers Raise the Minimum Height of Cut.*	335.99
	BM19817	(1) 22 In. 3 In. (7.6 cm) Diameter Spiral Grooved Front Roller With Spiral End Caps *Not compatible if FTC / GTC installed.* *3 In. Diameter Front Rollers Raise the Minimum Height of Cut.*	406.60
	BM23566	(1) 2X22" MT SPIRAL Roller *Roller used to help reduce roller overlaps in fairways. For best results install in front and rear roller location of cutting unit.*	368.09

2653B PrecisionCut Trim and Surrounds Mower

Equipment for Base Machine

*Engine HP is Provided by the Engine Manufacturer to be Used for Comparison Purposes Only. Actual Operating HP will be Less. Refer to the engine manufacturer#s web site for additional information.

19.6 HP* (14.6 kW) Gross Per SAE J1995 @ 3000 RPM (19.1, 14.2 kW Net Per SAE J1349 @ 3000 RPM)
Liquid Cooled Three Cylinder IDI Diesel Engine
2 Post SAE J21294 Roll Over Protection Structure with Seat Belts
2 Pedal Foot Controlled Hydrostatic Drive
Hydraulic Reel Motors
Single Reel Pump
Micro-Lap Backlapping Valve
Oil Cooler
3WD GRIP AWD Traction System
Power Steering
20x10-10.00 Front Turf Tires
20x10-8.00 Rear Turf Tires
Hour Meter
On Board Diagnostic White Box Controller
Four Function LED Warning Monitor
7.4 Gallon (28 L) Fuel Capacity
BCI Group 40 Maintenance Free Battery
Less Cutting Units, Front Lift Arms, Front Rollers and Seat
John Deere Golf Operator Videos and All Products Safety Video DVD Set

CODE	ATTACHMENT IDENTIFIER	DESCRIPTION	SUGGESTED LIST PRICE USD ($)

Select One Code From Each Required Category

BASE MACHINE

F.O.B. Raleigh, North Carolina

1223TC		2653B PrecisionCut Trim and Surrounds Mower	24,124.00

REEL CUTTING UNITS

26 Inch E.S.P. Cutting Units:
Includes Front Lift Arms and Yokes.

1001		(3) QA7 Five Blade 26 In. Cutting Units	7,356.00
1005		(3) QA7 Five Blade 26 In. Cutting Units with 6.3 mm bedknife	7,356.00
1006		(3) QA7 Eight Blade 26 In. Cutting Units with 6.3 mm bedknife	7,797.00

30 Inch E.S.P. Cutting Units:
Includes Front Lift Arms and Yokes.

1007		(3) QA7 Five Blade 30 In. Cutting Units	8,558.00
1008		(3) QA7 Eight Blade 30 In. Cutting Units	9,113.00
1010		Less Cutting Units, Front Lift Arms and Yokes	In Base Price

REEL FRONT ROLLERS

26 Inch Front Rollers:

2001		(3) 3 In. (7.6 cm) Diameter Heavy Duty Smooth Solid Front Rollers	945.00
2002		(3) 3 In. (7.6 cm) Diameter Heavy Duty Grooved Disc Front Rollers	1,092.00

2653B PrecisionCut Trim and Surrounds Mower

Continued

CODE	ATTACHMENT IDENTIFIER	DESCRIPTION	SUGGESTED LIST PRICE USD ($)
		REEL FRONT ROLLERS Continued...	
2003		(3) 3 In. (7.6 cm) Diameter Spiral Grooved Front Rollers With Spiral End Caps	1,284.00
		30 Inch Front Rollers:	
2004		(3) 3 In. (7.6 cm) Diameter Heavy Duty Smooth Solid Front Rollers	1,344.00
2005		(3) 3 In. (7.6 cm) Diameter Heavy Duty Machined Grooved Disc Front Rollers	1,491.00
2006		(3) 3 In. (7.6 cm) Diameter Spiral Grooved Front Rollers With Spiral End Caps	1,683.00
2010		Less Front Rollers	In Base Price
		SEATS	
3001		Deluxe Suspension Seat with Armrest	747.00
3002		Standard Seat	413.00
3010		Less Seat	In Base Price
		REEL CUTTING UNIT COUNTER WEIGHTS	
4001		(3) Cutting Unit ONLY Counter Weight Kit *Needed for ALL 30" Cutting units and if NOT installing Rear Roller Power Brush or GTC Kits on 26" Cutting Unit.*	In Base Price
4002		(3) Cutting Unit Brush Only Counter Weight Kit *Needed if only installing Rear Roller Power Brush on 26" Cutting Unit.*	216.00
4003		(3) FTC/GTC ONLY Counter Weight Kit *Needed if ONLY installing FTC on 26" cutting unit.*	Same Price
4010		Less Counter Weight kit *Ordered if Both Rear Roller Power Brush and FTC Kit installed on 26" Cutting Unit.*	-174.00
		ATTACHMENTS - ORDER AS DESIRED	
		CE Kit:	
9330		Battery Label Kit *This kit must be ordered to meet battery labeling requirement in Brazil.*	No Charge
		European CE Kit:	
9100		European CE Conversion Kit for 2653B Trim and Surrounds Mower *Must be Ordered to Receive a 2653B Mower Which Meets CE Mark Requirements. Kit Includes Locking Hood Latch, Pictorial Decals and Operator's Manuals in English, French German, Spanish and Italian.*	20.00
9101		European CE Conversion Kit for 26 In. and 30 In. Cutting Units *Must be Ordered to Receive Decals that Convert (3) 26 In. or 30 In. Cutting Unit to Meet CE Mark Requirements.*	No Charge

2653B PrecisionCut Trim and Surrounds Mower
Continued

CODE	ATTACHMENT IDENTIFIER	DESCRIPTION	SUGGESTED LIST PRICE USD ($)
		ATTACHMENTS - ORDER AS DESIRED Continued...	
		Miscellaneous:	
9000		Grass Catchers with Mounting Hardware for 26 Inch Cutting Unit (Set of 3) *Not Compatible if Rear Roller Power Brush Installed.*	1,185.00
9015		(3) QA7 26 In. Fairway Tender Conditioners Shaft and Blades *Requires order code 9016.*	1,491.00
9016		(3) QA7 FTC Gear Drive *Requires order code 9015.*	3,591.00
9017		(3) QA7 26 In. Rear Roller Power Brush *Requires order code 9018. NOT Compatible with Grass Catchers.*	495.00
9018		(3) QA7 26 In. Rear Roller Power Brush Drive *Requires order code 9017. NOT Compatible with Grass Catchers.*	1,083.00
9023		(3) 30 In. 3 In. Diameter Heavy Duty Grooved Roller Scrapers	411.00
9025		26 In. Smooth Roller Scrapers (Set of 3) *Requires (3) TCA19587 from parts. Not compatible if Rear Roller Power Brush installed.*	132.00
9026		(3) 26 In. 3 In. Diameter Heavy Duty Grooved Roller Scraper *Not compatible with Fairway Tender Conditioners (FTC).*	378.00
9325		30 In. Smooth Roller Scrapers (Set of 3) *Requires (3) TCA19587 from parts.*	179.00
9807		(3) 8 Blade QA7 less front rollers	6,867.00
9808		(3) 30 In. 8 Blade QA7 less front rollers	7,887.00
		ATTACHMENTS FOR FIELD CONVERSION	
		CE Kit:	
	BTC10256	Battery Label Kit *This kit must be ordered to meet battery labeling requirement in Brazil.*	0.00
		Cutting Units:	
	BM24124	(1) QA7 Eight Blade 26 In. Cutting Unit with 6.3mm bedknife	2,449.23
	BM24126	(1) QA7 Eight Blade 30 In. Cutting Unit	2,813.03
	BM24123	(1) QA7 Five Blade 26 In. Cutting Unit with 6.3mm bedknife	2,291.94
	BM24125	(1) QA7 Five Blade 30 In. Cutting Unit	2,615.09
		Miscellaneous:	
	BM22759	(1) 26 In Grass Catcher (3 needed for complete machine) *Requires BM18185 Orifice Kit.*	327.41
	BM23005	(1) 26 In. 3 In. Diameter Heavy Duty Grooved Roller Scraper *Not compatible with Fairway Tender Conditioners (FTC).*	134.81
	BM23004	(1) 30 In. 3 In. Diameter Heavy Duty Grooved Roller Scraper	146.59

2653B PrecisionCut Trim and Surrounds Mower
Continued

CODE	ATTACHMENT IDENTIFIER	DESCRIPTION	SUGGESTED LIST PRICE USD ($)
		ATTACHMENTS FOR FIELD CONVERSION Continued...	
	BM22763	(1) Conversion Mounting Kit old Machine to New QA7 Cutting Units *Contains Parts to Convert (1) Cutting Unit.*	70.61
	BM22672	(1) QA7 26 In. Fairway Tender Conditioners Shaft and Blades *Also need order code 9016 (BM22673).*	531.79
	BM22669	(1) QA7 26 In. Rear Roller Power Brush *Also need order code 9018 (BM22674).* *NOT Compatible with Grass Catchers.*	176.56
	BM22674	(1) QA7 26 In. Rear Roller Power Brush Drive	386.27
	BM22673	(1) QA7 FTC Gear Drive	1,280.79
	BM22764	1) Conversion Mounting Kit 2009 Machine to Old Cutting ESP Cutting units *Contains Parts to Convert (1) Cutting Unit.*	70.61
	BM17683	26 In. Smooth Roller Scrapers (Set of 3)	141.24
	BM18440	30 In. Smooth Roller Scrapers (Set of 3)	191.53
	AM117680	Arm Rest Kit	See Parts
	ET17752	Bedknife Hi-Cut, 26-in 15.8 mm	See Parts
	BM18185	Grass Catcher Orifice *1) Kit Required for installation of Grass Catchers on 2653B, Not required for 7200.*	35.31
	TCU13823	Height of Cut Guage Bar	See Parts
	TCB11710	Large E-Crate Cover	See Parts
	TCB11353	Lift Arms, Front (26 In. Right Hand and Left Hand)	405.53
	TCB11355	Lift Arms, Front (30 In. Right Hand and Left Hand)	563.89
	TCB11065	Light Bracket Kit, Front *Required to Mount BM19746 Front Light Kit.*	86.67
	BM19746	Light Kit, Front	243.96
	BM22760	Mounting Hardware for 26 In Grass Catcher (set of 3)	250.39
	TCB11107	Seat, Deluxe Suspension with Armrests	799.29
	TCB11106	Seat, Standard	441.91
	TCB11374	Yokes, Front (26 In. Right Hand and Left Hand)	589.57
	TCB11373	Yokes, Front (30 In. Right Hand and Left Hand)	747.93
		Reel Cutting Unit Counter Weights	
	BM22762	(1) Cutting Unit ONLY Counter Weight Kit *Needed if NOT installing Rear Roller Power Brush or GTC / FTC Kits.*	62.06

2653B PrecisionCut Trim and Surrounds Mower
Continued

CODE	ATTACHMENT IDENTIFIER	DESCRIPTION	SUGGESTED LIST PRICE USD ($)
		ATTACHMENTS FOR FIELD CONVERSION Continued...	
	BM22704	(1) QA5 FTC/GTC ONLY Counter Weight Kit *Needed if ONLY installing FTC/GTC on cutting unit.*	62.06
	BM22721	(1) QA7 Cutting Unit Brush Only Counter Weight Kit *Needed if only installing Rear Roller Power Brush on 26" Cutting Unit.*	139.10
		Rollers:	
	BM17670	(1) 26 In. 3 In. (7.6 cm) Diameter Heavy Duty Grooved Disc Front Roller	389.49
	BM17671	(1) 26 In. 3 In. (7.6 cm) Diameter Heavy Duty Smooth Solid Front Roller	337.06
	BM19818	(1) 26 In. 3 In. (7.6 cm) Diameter Spiral Grooved Front Roller With Spiral End Caps	457.96
	BM18438	(1) 30 In. 3 In. (7.6 cm) Diameter Heavy Duty Grooved Disc Front Roller	531.79
	BM18439	(1) 30 In. 3 In. (7.6 cm) Diameter Heavy Duty Smooth Solid Front Roller	479.36
	BM19819	(1) 30 In. 3 In. (7.6 cm) Diameter Spiral Grooved Front Roller With Spiral End Caps	600.27

7200 PrecisionCut Trim and Surrounds Mower

Equipment for Base Machine

*Engine HP is Provided by the Engine Manufacturer to be Used for Comparison Purposes Only. Actual Operating HP will be Less. Refer to the engine manufacturer#s web site for additional information.

Gross Engine HP* 26.4 (19.69 kW) @ 2600 rpm
Net Engine HP* 25.0 (18.64 kW) @2600 rpm
Three Cylinder Turbo Diesel Engine
Hydrostatic Drive
(3) Independent Wheel Motors
GRIP All Wheel Drive
Width On Demand 68-in (173 cm) ; 72-In (183 cm)
Reach Trimming System with Maximum 14 In. (38cm) or 20 In. (50.8 cm) Shift outside front tire with 26-In (66 cm) or 30-In (76 cm)
Power Steering with Straight Track Steering Cylinder
Dual Disc Brakes
(2) 24x12-12 Turf Trac Front Drive Tires
(1) 24x12-12 Multi Trac Rear Drive Tire
Deluxe Suspension Seat with Retractable Seatbelt
White Box Controller with On-Board Diagnostics
One-Touch Lift/Lower Joystick Control
Foot Activated Tilt Steering Column
(3) Hydraulic Motors
(3) QA7 26 In. Cutting Units
2-Post Roll Over Protection Structure
6 LED Warning Light Instrument Cluster with Hour Meter
Command Arm Operator Controls
13 U.S. Gallon Fuel Capacity
John Deere Golf Operator Videos and All Products Safety Video DVD Set

CODE	ATTACHMENT IDENTIFIER	DESCRIPTION	SUGGESTED LIST PRICE USD ($)

Select One Code From Each Required Category

BASE MACHINE

F.O.B. Raleigh, North Carolina

1702TC		7200 PrecisionCut Trim and Surrounds Mower	37,232.00

REEL CUTTING UNITS

26 Inch E.S.P. Cutting Units:
Includes Front Lift Arms and Yokes.

1001		(3) QA7 Five Blade 26 In. Cutting Units	-441.00
1005		(3) QA7 Five Blade 26 In. Cutting Units with 6.3 mm bedknife	-441.00
1006		(3) QA7 Eight Blade 26 In. Cutting Units with 6.3 mm bedknife	In Base Price

30 Inch E.S.P. Cutting Units:
Includes Front Lift Arms and Yokes.

1007		(3) QA7 Five Blade 30 In. Cutting Units	776.00
1008		(3) QA7 Eight Blade 30 In. Cutting Units	1,331.00
1010		Less Cutting Units, Front Lift Arms and Yokes	-7,888.00

REEL FRONT ROLLERS

26 Inch Front Rollers:

2001		(3) 3 In. (7.6 cm) Diameter Heavy Duty Smooth Solid Front Rollers	-147.00

7200 PrecisionCut Trim and Surrounds Mower
Continued

CODE	ATTACHMENT IDENTIFIER	DESCRIPTION	SUGGESTED LIST PRICE USD ($)
		REEL FRONT ROLLERS Continued...	
2002		(3) 3 In. (7.6 cm) Diameter Heavy Duty Grooved Disc Front Rollers	In Base Price
2003		(3) 3 In. (7.6 cm) Diameter Spiral Grooved Front Rollers With Spiral End Caps	192.00
		30 Inch Front Rollers:	
2004		(3) 3 In. (7.6 cm) Diameter Heavy Duty Smooth Solid Front Rollers	252.00
2005		(3) 3 In. (7.6 cm) Diameter Heavy Duty Machined Grooved Disc Front Rollers	399.00
2006		(3) 3 In. (7.6 cm) Diameter Spiral Grooved Front Rollers With Spiral End Caps	591.00
2010		Less Front Rollers	-1,092.00
		REEL CUTTING UNIT COUNTER WEIGHTS	
4001		(3) Cutting Unit ONLY Counter Weight Kit *Needed for ALL 30" Cutting units and if NOT installing Rear Roller Power Brush or GTC Kits on 26" Cutting Unit.*	In Base Price
4002		(3) Cutting Unit Brush Only Counter Weight Kit *Needed if only installing Rear Roller Power Brush on 26" Cutting Unit.*	216.00
4003		(3) FTC/GTC ONLY Counter Weight Kit *Needed if ONLY installing FTC on 26" cutting unit.*	Same Price
4010		Less Counter Weight kit *Ordered if Both Rear Roller Power Brush and FTC Kit installed on 26" Cutting Unit.*	-174.00
		ATTACHMENTS - ORDER AS DESIRED	
		CE Kit:	
9330		Battery Label Kit *This kit must be ordered to meet battery labeling requirement in Brazil.*	No Charge
		European CE Kit:	
9100		European CE Conversion Kit for 7200 PrecisionCut Trim and Surrounds Mower *Must be Ordered to Receive a 7200 Surround Mower Which Meets CE Mark Requirements. Kit Includes Locking Hood Latch, Pictorial Decals and Operator's Manuals in English, French German, Spanish and Italian.*	38.00
9101		European CE Conversion Kit for 26 In. and 30 In. Cutting Units *Must be Ordered to Receive Decals that Convert (3) 26 In. or 30 In. Cutting Unit to Meet CE Mark Requirements.*	No Charge
9350		Compliance Kit *This kit must be ordered to meet the EU country of France shielding regulations.*	99.00

7200 PrecisionCut Trim and Surrounds Mower
Continued

CODE	ATTACHMENT IDENTIFIER	DESCRIPTION	SUGGESTED LIST PRICE USD ($)
		ATTACHMENTS - ORDER AS DESIRED Continued...	
		Miscellaneous:	
9000		Grass Catchers with Mounting Hardware for 26 Inch Cutting Unit (Set of 3) *Not Compatible if Rear Roller Power Brush Installed.*	1,152.00
9015		(3) QA7 26 In. Fairway Tender Conditioners Shaft and Blades *Requires order code 9016.*	1,491.00
9016		(3) QA7 FTC Gear Drive *Requires order code 9015.*	3,591.00
9017		(3) QA7 26 In. Rear Roller Power Brush *Requires order code 9018. NOT Compatible with Grass Catchers.*	495.00
9018		(3) QA7 26 In. Rear Roller Power Brush Drive *Requires order code 9017. NOT Compatible with Grass Catchers.*	1,083.00
9023		(3) 30 In. 3 In. Diameter Heavy Duty Grooved Roller Scrapers	411.00
9025		26 In. Smooth Roller Scrapers (Set of 3) *Requires (3) TCA19587 from parts.*	132.00
9026		(3) 26 In. 3 In. Diameter Heavy Duty Grooved Roller Scraper *Not compatible with Fairway Tender Conditioners (FTC).*	378.00
9325		30 In. Smooth Roller Scrapers (Set of 3) *Requires (3) TCA19587 from parts.*	179.00
9335		Joystick Kit	974.00
9345		Light Kit	216.00
9807		(3) 8 Blade QA7 less front rollers	6,867.00
9808		(3) 30 In. 8 Blade QA7 less front rollers	7,887.00
		ATTACHMENTS FOR FIELD CONVERSION	
		CE Kit:	
	BTC10256	Battery Label Kit *This kit must be ordered to meet battery labeling requirement in Brazil.*	0.00
		Cutting Units:	
	BM24124	(1) QA7 Eight Blade 26 In. Cutting Unit with 6.3mm bedknife	2,449.23
	BM24126	(1) QA7 Eight Blade 30 In. Cutting Unit	2,813.03
	BM24123	(1) QA7 Five Blade 26 In. Cutting Unit with 6.3mm bedknife	2,291.94
	BM24125	(1) QA7 Five Blade 30 In. Cutting Unit	2,615.09
		Miscellaneous:	
	BM22759	(1) 26 In Grass Catcher (3 needed for complete machine) *Requires BM18185 Orifice Kit.*	327.41
	BM23005	(1) 26 In. 3 In. Diameter Heavy Duty Grooved Roller Scraper *Not compatible with Fairway Tender Conditioners (FTC).*	134.81

7200 PrecisionCut Trim and Surrounds Mower
Continued

CODE	ATTACHMENT IDENTIFIER	DESCRIPTION	SUGGESTED LIST PRICE USD ($)
		ATTACHMENTS FOR FIELD CONVERSION Continued...	
	BM23004	(1) 30 In. 3 In. Diameter Heavy Duty Grooved Roller Scraper	146.59
	BM22672	(1) QA7 26 In. Fairway Tender Conditioners Shaft and Blades *Also need order code 9016 (BM22673).*	531.79
	BM22669	(1) QA7 26 In. Rear Roller Power Brush *Also need order code 9018 (BM22674).* *NOT Compatible with Grass Catchers.*	176.56
	BM22674	(1) QA7 26 In. Rear Roller Power Brush Drive	386.27
	BM22673	(1) QA7 FTC Gear Drive	1,280.79
	BM17683	26 In. Smooth Roller Scrapers (Set of 3)	141.24
	BM18440	30 In. Smooth Roller Scrapers (Set of 3)	191.53
	ET17752	Bedknife Hi-Cut, 26-in 15.8 mm	See Parts
	TCB11728	Compliance Kit *This kit must be ordered to meet the EU country of France shielding regulations.*	105.93
	TCU13823	Height of Cut Guage Bar	See Parts
	TCB11296	Joystick Kit	1,042.19
	TCB11476	Lift Arms, Front (26 In. Right Hand and Left Hand)	502.90
	TCB11477	Lift Arms, Front (30 In. Right Hand and Left Hand)	677.31
	TCB11462	Light Kit	231.11
	BM22760	Mounting Hardware for 26 In Grass Catcher (set of 3)	250.39
	TCB11374	Yokes, Front (26 In. Right Hand and Left Hand)	589.57
	TCB11373	Yokes, Front (30 In. Right Hand and Left Hand)	747.93
		Reel Cutting Unit Counter Weights	
	BM22762	(1) Cutting Unit ONLY Counter Weight Kit *Needed if NOT installing Rear Roller Power Brush or GTC / FTC Kits.*	62.06
	BM22704	(1) QA5 FTC/GTC ONLY Counter Weight Kit *Needed if ONLY installing FTC/GTC on cutting unit.*	62.06
	BM22721	(1) QA7 Cutting Unit Brush Only Counter Weight Kit *Needed if only installing Rear Roller Power Brush on 26" Cutting Unit.*	139.10
		Rollers:	
	BM17670	(1) 26 In. 3 In. (7.6 cm) Diameter Heavy Duty Grooved Disc Front Roller	389.49
	BM17671	(1) 26 In. 3 In. (7.6 cm) Diameter Heavy Duty Smooth Solid Front Roller	337.06

7200 PrecisionCut Trim and Surrounds Mower
Continued

CODE	ATTACHMENT IDENTIFIER	DESCRIPTION	SUGGESTED LIST PRICE USD ($)
		ATTACHMENTS FOR FIELD CONVERSION Continued...	
	BM19818	(1) 26 In. 3 In. (7.6 cm) Diameter Spiral Grooved Front Roller With Spiral End Caps	457.96
	BM18438	(1) 30 In. 3 In. (7.6 cm) Diameter Heavy Duty Grooved Disc Front Roller	531.79
	BM18439	(1) 30 In. 3 In. (7.6 cm) Diameter Heavy Duty Smooth Solid Front Roller	479.36
	BM19819	(1) 30 In. 3 In. (7.6 cm) Diameter Spiral Grooved Front Roller With Spiral End Caps	600.27

7500 PrecisionCut Fairway Mower

Equipment for Base Machine

Gross Engine HP 37.1 (27.7 kW)
Net Engine HP 35.7(26.55 kW) @ 2600 RPM
Three Cylinder Turbo Diesel Engine
Servo Controlled Hydrostatic Drive
Two Wheel Drive
Power Steering with Straight Track Steering Cylinder
Dual Disc Brakes
100 In. (2.54 m) Cutting Width
26.5x14-12 Turf Drive Tires
20x10-8 Turf Steer Tires
Deluxe Suspension Seat with Armrests and Retractable Seatbelt
White Box Controller with On-Board Diagnostics
One-Touch Lift/Lower Reel Lever Electric Over Hydraulic Reel Lift
Rear Cutting Unit Attaching Point
Foot Activated Tilt Steering Column
On-Board Backlapping with Adjustabel Reel Speed Control
Five Standard Hydraulic Reel Motors
Quick-Tatch Cutting Units Adjustable Hydraulic Down Pressure
(5) QA5 7 Blade 22 In. (55.9 cm)Cutting Units with Speed Link Height of Cut System
5 In. (12.7 cm) Diameter Reels
Heavy Section Reel Blades with Adjustable Bedknife with Nocth Adjustments
2 In. Diameter Machined Grooved Solid Front Rollers
2-Post Roll Over Protection Structure
6 LED Warning Light Instrument Cluster with Hour Meter
Removable Rear Cutting Unit Upstops
3 Front Work Lights
Command Arm Operator Controls
18 U.S. Gallon Fuel Capacity

CODE	ATTACHMENT IDENTIFIER	DESCRIPTION	SUGGESTED LIST PRICE USD ($)

Select One Code From Each Required Category

BASE MACHINE

F.O.B. Raleigh, North Carolina

1453TC	7500 PrecisionCut Fairway Mower	55,049.00

REEL CUTTING UNITS

1004	(5) Quick Adjust 5 (QA5) Seven Blade 22 In. Heavy Section Standard Cutting Units With Adjustable 4.8 mm Bedknife, Less Front And Rear Rollers	In Base Price
1005	(5) Quick Adjust 5 (QA5) Eleven Blade 22 In. (55.9 cm) Cutting Units With Adjustable 2.0mm Bedknife, 5 In. (12.7 cm) Diameter Reels, Less Front Rollers	410.00
1010	Less Cutting Units	-10,710.00

REEL FRONT ROLLERS

2001	(5) 22 In. 3 In. (7.6 cm) Diameter Heavy Duty Grooved Disc Rollers *Not compatible if FTC installed.* *3 In. Diameter Front Rollers Raise the Minimum Height of Cut.*	530.00
2002	(5) 22 In. 2 In. (5cm) Diameter Machined Grooved Solid Front Rollers	In Base Price
2003	(5) 22 In. 2 In. (5cm) Diameter Spiral Grooved Front Rollers	330.00
2004	(5) 22 In. 3 In. (7.6 cm) Diameter Spiral Grooved Front Rollers with Spiral End Caps *Not compatible if FTC installed.* *3 In. Diameter Front Rollers Raise the Minimum Height of Cut.*	860.00

7500 PrecisionCut Fairway Mower
Continued

CODE	ATTACHMENT IDENTIFIER	DESCRIPTION	SUGGESTED LIST PRICE USD ($)
		REEL FRONT ROLLERS Continued...	
2005		(5) 22 In. 2 In. (5cm) MT Spiral Roller *NOT FOR USE ON GREENS. Roller used to help reduce roller overlaps in fairways. For best results install in front and rear roller location of cutting unit.*	680.00
2006		(5) 22 In. 2 In. (5cm) MT Grooved Roller *NOT FOR USE ON GREENS. Roller used to help reduce roller overlaps in fairways. For best results install in front and rear roller location of cutting unit.*	680.00
2007		(5) 22 In. 2 In. (5 cm) Diameter Hollow Smooth Roller	-260.00
2010		Less Front Rollers, Roller Adjusters and Skid Shoes	-1,040.00
		REEL REAR ROLLERS	
2501		(5) 22 In. 2 In (5cm) Diameter Hollow Smooth Roller	In Base Price
2502		(5) 22 In. 2 In. (5cm) MT Spiral Roller *NOT FOR USE ON GREENS. Roller used to help reduce roller overlaps in fairways. For best results install in front and rear roller location of cutting unit.*	940.00
2503		(5) 22 In. 2 In. (5cm) MT Grooved Roller *NOT FOR USE ON GREENS. Roller used to help reduce roller overlaps in fairways. For best results install in front and rear roller location of cutting unit.*	940.00
2510		Less Rear Rollers	-780.00
		REEL CUTTING UNIT COUNTER WEIGHTS	
4001		(5) QA5 Cutting Unit ONLY Counter Weight Kit *Needed if NOT installing Rear Roller Power Brush or GTC/FTC Kits.*	In Base Price
4002		(5) QA5 Cutting Unit Brush Only Counter Weight Kit *Needed if only installing Rear Roller Power Brush on Cutting Unit.*	360.00
4003		(5) QA5 Cutting Unit FTC/GTC ONLY Counter Weight Kit *Needed if ONLY installing FTC/GTC on cutting unit.*	Same Price
4010		Less Counter Weight kit	-290.00
		ATTACHMENTS - ORDER AS DESIRED	
		CE Kit:	
9330		Battery Label Kit *This kit must be ordered to meet battery labeling requirement in Brazil.*	No Charge
		Cutting Units:	
9010		(5) Vertical Cutting Units with Front Rollers Less Motors	11,005.00
		European CE Kit	
9100		European CE Conversion Kit, 7500 PrecisionCut Fairway Mower *Must be Ordered to Receive a PrecisionCut Fairway Mower Which Meets CE Requirements. Kit Includes Electric Hood Switch, Pictorial Decals and Operator's Manuals in English, French, German, Spanish and Italian.*	35.00
9102		European CE Reel Decal Kit for QA5 Cutting Units *Must be Ordered to Receive Decals that Converts (5) QA5 Cutting Units to Meet CE Mark Requirements.*	No Charge

7500 PrecisionCut Fairway Mower
Continued

CODE	ATTACHMENT IDENTIFIER	DESCRIPTION	SUGGESTED LIST PRICE USD ($)
		ATTACHMENTS - ORDER AS DESIRED Continued...	
9350		Compliance Kit *This kit must be ordered to meet the EU country of France shielding regulations.*	99.00
		Miscellaneous:	
9733		(5) Front Grass Catchers with large paddle clip Mounting Hardware for QA5 Cutting Units, Rear Bail and Catchers w/handles, Wing Latch Kit and grass catcher side plate inserts kit for front center. *Note: Cutting unit shield extensions should only be used in dry conditions.*	1,524.00
9015		(5) 22 In. Fairway Tender Conditioners (FTC) Shaft and Blades *Requires order code 9016.* *3" roller when used on the QA5 is not compatible with the FTC.*	2,325.00
9016		(5) QA5 GTC/FTC Gear Drive *Requires order code 9015 (BM22670).* *3" roller when used on the QA5 is not compatible with the FTC.*	5,985.00
9017		(5) 22 In. Rear Roller Power Brushes *Requires order code 9018 (BM22527).*	660.00
9018		(5) Rear Roller Power Brush Drive *Requires order code 9017 (BM22668).*	1,805.00
9019		(5) 22 In. Front Rotary Turf Brush *Can not be used with FTC/GTC 9015.* *Requires order code 9016.* *3" roller when used on the QA5 is not compatible with the FTC.*	980.00
9020		Hydraulic Down Pressure Kit	882.00
9021		4WD Conversion Kit *Converts 2WD Traction Unit into 4WD Traction Unit.*	4,327.00
9025		(5) 22 In. Smooth Roller Scrapers	75.00
9070		(5) QA5 Grass Catcher Lip Extension *This kit extends the front lip of the grass catcher closer to the reel.*	45.00
9400		Canopy	425.00
9803		(5) 11 blade QA5 cutting units less front and rear rollers	11,120.00
9804		(5) 7 blade QA5 cutting units less front and rear rollers	10,710.00
		ATTACHMENTS FOR FIELD CONVERSION	
		Bedknives	
	ET17532	Bedknife, 4.8mm Fairway	See Parts
	MT7351	Bedknife, 2.0mm Ultra Low Cut	See Parts
	ET17534	Bedknife, 2.5mm Tournament	See Parts
	ET17533	Bedknife, 3.2 mm	See Parts
	ET11066	Bedknife, 3.2 mm with Hardened Insert	See Parts

7500 PrecisionCut Fairway Mower
Continued

CODE	ATTACHMENT IDENTIFIER	DESCRIPTION	SUGGESTED LIST PRICE USD ($)
		ATTACHMENTS FOR FIELD CONVERSION Continued...	
	ET17767	Bedknife, Hi-cut Fairway 7.6 mm	See Parts
		Cutting Units:	
	BM22460	(1) QA5 22 In. Vertical Cutting Unit With Front Roller Less Motor	2,355.07
	BM24130	(1) QA5 Eleven Blade 22 In. Cutting Unit w/Adjustable 2.0 mm Bedknife, Less Front and Rear Roller & Motor	2,379.69
	BM24129	(1) QA5 Seven Blade 22 In. Heavy Section Blade Cutting Unit With Adjustable 4.8 mm Bedknife, Less Yokes, Front and Rear Roller & Motor	2,291.94
	BM22458	(1) QA5 Seven Blade 22 In. Heavy Section Blade Cutting Unit With Adjustable Bedknife, Less Yokes, Front Roller & Motor	See Parts
		Engine:	
	TCA19917	B20 Biodiesel Conversion Kit *This kit converts one machine to use B20 Diesel fuel.*	See Parts
		European CE Kit:	
	TCB11727	Compliance Kit *This kit must be ordered to meet the EU country of France shielding regulations.*	105.93
		Miscellaneous:	
	BM22671	(1) 22 In. Fairway Tender Conditioners (FTC) Shaft and Blades *Requires GTC/FTC Gear Drive (BM22469).*	497.56
	BM22761	(1) 22 In. Front Rotary Turf Brush	209.71
	BM22668	(1) 22 In. Rear Roller Power Brush *Requires Rear Roller Power Brush Drive (BM22527).*	141.24
	BM22995	(1) 22 In. Smooth Roller Scraper	16.06
	BM22469	(1) GTC/FTC Gear Drive	1,280.79
	BM23910	(1) QA5 Grass Catcher Lip Extension *This kit extends the front lip of the grass catcher closer to the reel.*	9.63
	BM22527	(1) Rear Roller Power Brush Drive *Requires 22 In. Rear Roller Power Brush (BM22668).*	386.27
	TCA19547	2"x 22" Machine Grooved Roller Scraper	See Parts
	BM23002	3"X22" GROOVE ROLLER SCRAPER *Not compatible with Fairway Tender Conditioners (FTC). Can be used on QA5 Cutting units by ordering (1) TCA19597 for each scraper from parts. Requires 3 for 2500's and 5 for Fairway mowers.*	146.59
	BTC10259	4WD Conversion Kit	4,629.89
	TCB11460	Electronic Cruise Control Kit	256.80
	BTC10217	Front High Capacity Catcher with large paddle clip (3 needed for front location on Fairway Mowers)	180.83

7500 PrecisionCut Fairway Mower
Continued

CODE	ATTACHMENT IDENTIFIER	DESCRIPTION	SUGGESTED LIST PRICE USD ($)
		ATTACHMENTS FOR FIELD CONVERSION Continued...	
	BM22757	Grass Catcher Mounting Kit (set of 5) 1 needed per machine	108.07
	BTC10216	Grass Catcher with large paddle clip (22 Low Profile)	175.49
	TCU13823	Height of Cut Guage Bar	See Parts
	TCB11128	Hydraulic Down Pressure Kit	943.74
	TCU23674	John Deere Golf Operator Videos and All Products Safety Video DVD Set	See Parts
	BM24199	QA5 Grass Catcher Side Plate Insert *2 Needed for complete machine 2500's.* *1 Needed for front center location for 7500/8500 Fairway Mowers.* *1 Needed for 180 & 220 E-Cut Hybrid Walk Greens Mowers.* *3 Needed for front 8000 E-Cut Hybrid Fairway Mower.*	47.09
	BM23576	QA5 Slope Leveling Kit *1 per cutting unit.*	49.21
	BTC10501	Rear Grass Catcher Bail Kit *Requires 2 for complete machine & rear grass catcher BTC10408.*	182.97
	BTC10194	Wing Latch Kit *Needed to Secure Wing Grass Catchers when in Transport Position.*	282.49
		Reel Cutting Unit Counter Weights	
	BM22762	(1) Cutting Unit ONLY Counter Weight Kit *Needed if NOT installing Rear Roller Power Brush or GTC / FTC Kits.*	62.06
	BM22705	(1) QA5 Cutting Unit Brush Only Counter Weight Kit *Needed if only installing Rear Roller Power Brush on cutting unit.*	139.10
	BM22704	(1) QA5 FTC/GTC ONLY Counter Weight Kit *Needed if ONLY installing FTC/GTC on cutting unit.*	62.06
		Rollers:	
	BM24202	(1) 22 In. 2 In. (5 cm) Diameter Hollow Smooth Roller	166.91
	BM18481	(1) 22 In. 2 In. (5 cm) Diameter Machined Grooved Wide Solid Front Roller	237.54
	BE23416	(1) 22 In. 2 In. (5 cm) Diameter Machined Grooved Solid Front Roller *This Roller is 20mm Shorter Than BM18481.*	222.56
	BM19821	(1) 22 In. 2 In. (5 cm) Diameter Spiral Grooved Front Roller	293.19
	BTC10267	(1) 22 In. 2 In. (5cm) MT Grooved Roller *NOT FOR USE ON GREENS. Roller used to help reduce roller overlaps in fairways. For best results install in front and rear roller location of cutting unit.*	368.09
	BM17668	(1) 22 In. 3 In. (7.6 cm) Diameter Heavy Duty Grooved Disc Front Roller *Not compatible if FTC / GTC installed.* *3 In. Diameter Front Rollers Raise the Minimum Height of Cut.*	335.99

7500 PrecisionCut Fairway Mower
Continued

CODE	ATTACHMENT IDENTIFIER	DESCRIPTION	SUGGESTED LIST PRICE USD ($)
		ATTACHMENTS FOR FIELD CONVERSION Continued...	
	BM19817	(1) 22 In. 3 In. (7.6 cm) Diameter Spiral Grooved Front Roller With Spiral End Caps *Not compatible if FTC / GTC installed.* *3 In. Diameter Front Rollers Raise the Minimum Height of Cut.*	406.60
	BM23566	(1) 2X22" MT SPIRAL Roller *NOT FOR USE ON GREENS. Roller used to help reduce roller overlaps in fairways. For best results install in front and rear roller location of cutting unit.*	368.09

7500 E-Cut Hybrid Fairway Mower Diesel

Equipment for Base Machine

Gross Engine HP 37.1 (27.7 kW)
Net Engine HP 35.7(26.55 kW) @ 2600 RPM
Three Cylinder Turbo Diesel Engine
Servo Controlled Hydrostatic Drive
Two Wheel Drive
Power Steering with Straight Track Steering Cylinder
Dual Disc Brakes
100 In. (2.54 m) Cutting Width
26.5x14-12 Turf Drive Tires
20x10-8 Turf Steer Tires
Deluxe Suspension Seat with Armrests and Retractable Seatbelt
White Box Controller with On-Board Diagnostics
One-Touch Lift/Lower Reel Lever Electric Over Hydraulic
Reel Lift
Rear Cutting Unit Attaching Point
Foot Activated Tilt Steering Column
On-Board Electric Backlapping with Adjustable Reel Speed Control
Five Electric Reel Motors
Quick-Tatch Cutting Units
Adjustable Hydraulic Down Pressure
(5)QA5 7 Blade 22 In. (55.9 cm)Cutting Units with Speed Link Height of Cut System
5 In. (12.7 cm) Diameter Reels
Heavy Section Reel Blades with Adjustable Bedknife with Notch Adjustments
2 In. Diameter Machined Grooved Solid Front Rollers
2-Post Roll Over Protection Structure
6 LED Warning Light Instrument Cluster with Hour Meter
Removable Rear Cutting Unit Upstops
3 Front Work Lights
Command Arm Operator Controls
18 U.S. Gallon Fuel Capacity

CODE	ATTACHMENT IDENTIFIER	DESCRIPTION	SUGGESTED LIST PRICE USD ($)

Select One Code From Each Required Category

BASE MACHINE

F.O.B. Raleigh, North Carolina

1742TC	7500 E-Cut Hybrid Fairway Mower Diesel	57,848.00

REEL CUTTING UNITS

1004	(5) Quick Adjust 5 (QA5) Seven Blade 22 In. Heavy Section Standard Cutting Units With Adjustable 4.8 mm Bedknife, Less Front And Rear Rollers	In Base Price
1005	(5) Quick Adjust 5 (QA5) Eleven Blade 22 In. (55.9 cm) Cutting Units With Adjustable 2.0mm Bedknife, 5 In. (12.7 cm) Diameter Reels, Less Front Rollers	410.00
1010	Less Cutting Units	-10,710.00

REEL FRONT ROLLERS

2001	(5) 22 In. 3 In. (7.6 cm) Diameter Heavy Duty Grooved Disc Rollers *Not compatible if FTC installed.* *3 In. Diameter Front Rollers Raise the Minimum Height of Cut.*	530.00
2002	(5) 22 In. 2 In. (5cm) Diameter Machined Grooved Solid Front Rollers	In Base Price
2003	(5) 22 In. 2 In. (5cm) Diameter Spiral Grooved Front Rollers	330.00
2004	(5) 22 In. 3 In. (7.6 cm) Diameter Spiral Grooved Front Rollers with Spiral End Caps *Not compatible if FTC installed.* *3 In. Diameter Front Rollers Raise the Minimum Height of Cut.*	860.00

7500 E-Cut Hybrid Fairway Mower Diesel

Continued

CODE	ATTACHMENT IDENTIFIER	DESCRIPTION	SUGGESTED LIST PRICE USD ($)
		REEL FRONT ROLLERS Continued...	
2005		(5) 22 In. 2 In. (5cm) MT Spiral Roller *NOT FOR USE ON GREENS. Roller used to help reduce roller overlaps in fairways. For best results install in front and rear roller location of cutting unit.*	680.00
2006		(5) 22 In. 2 In. (5cm) MT Grooved Roller *NOT FOR USE ON GREENS. Roller used to help reduce roller overlaps in fairways. For best results install in front and rear roller location of cutting unit.*	680.00
2007		(5) 22 In. 2 In. (5 cm) Diameter Hollow Smooth Roller	-260.00
2010		Less Front Rollers, Roller Adjusters and Skid Shoes	-1,040.00
		REEL REAR ROLLERS	
2501		(5) 22 In. 2 In (5cm) Diameter Hollow Smooth Roller	In Base Price
2502		(5) 22 In. 2 In. (5cm) MT Spiral Roller *NOT FOR USE ON GREENS. Roller used to help reduce roller overlaps in fairways. For best results install in front and rear roller location of cutting unit.*	940.00
2503		(5) 22 In. 2 In. (5cm) MT Grooved Roller *NOT FOR USE ON GREENS. Roller used to help reduce roller overlaps in fairways. For best results install in front and rear roller location of cutting unit.*	940.00
2510		Less Rear Rollers	-780.00
		REEL CUTTING UNIT COUNTER WEIGHTS	
4001		(5) QA5 Cutting Unit ONLY Counter Weight Kit *Needed if NOT installing Rear Roller Power Brush or GTC/FTC Kits.*	In Base Price
4002		(5) QA5 Cutting Unit Brush Only Counter Weight Kit *Needed if only installing Rear Roller Power Brush on Cutting Unit.*	360.00
4003		(5) QA5 Cutting Unit FTC/GTC ONLY Counter Weight Kit *Needed if ONLY installing FTC/GTC on cutting unit.*	Same Price
4010		Less Counter Weight kit	-290.00
		ATTACHMENTS - ORDER AS DESIRED	
		CE Kit:	
9330		Battery Label Kit *This kit must be ordered to meet battery labeling requirement in Brazil.*	No Charge
		European CE Kit	
9100		European CE Conversion Kit, 8500 PrecisionCut Fairway Mower *Must be Ordered to Receive a PrecisionCut Fairway Mower Which Meets CE Requirements. Kit Includes Electric Hood Switch, Pictorial Decals and Operator's Manuals in English, French, German, Spanish and Italian.*	35.00
9102		European CE Reel Decal Kit for QA5 Cutting Units *Must be Ordered to Receive Decals that Converts (5) QA5 Cutting Units to Meet CE Mark Requirements.*	No Charge
9350		Compliance Kit *This kit must be ordered to meet the EU country of France shielding regulations.*	99.00

7500 E-Cut Hybrid Fairway Mower Diesel
Continued

CODE	ATTACHMENT IDENTIFIER	DESCRIPTION	SUGGESTED LIST PRICE USD ($)
		ATTACHMENTS - ORDER AS DESIRED Continued...	
		Miscellaneous:	
9733		(5) Front Grass Catchers with large paddle clip Mounting Hardware for QA5 Cutting Units, Rear Bail and Catchers w/handles, Wing Latch Kit and grass catcher side plate inserts kit for front center. *Note: Cutting unit shield extensions should only be used in dry conditions.*	1,524.00
9015		(5) 22 In. Fairway Tender Conditioners (FTC) Shaft and Blades *Requires order code 9016.* *3" roller when used on the QA5 is not compatible with the FTC.*	2,325.00
9016		(5) QA5 GTC/FTC Gear Drive *Requires order code 9015 (BM22670).* *3" roller when used on the QA5 is not compatible with the FTC.*	5,985.00
9017		(5) 22 In. Rear Roller Power Brushes *Requires order code 9018 (BM22527).*	660.00
9018		(5) Rear Roller Power Brush Drive *Requires order code 9017 (BM22668).*	1,805.00
9019		(5) 22 In. Front Rotary Turf Brush *Can not be used with FTC/GTC 9015.* *Requires order code 9016.* *3" roller when used on the QA5 is not compatible with the FTC.*	980.00
9020		Hydraulic Down Pressure Kit	882.00
9021		4WD Conversion Kit *Converts 2WD Traction Unit into 4WD Traction Unit.*	4,327.00
9025		(5) 22 In. Smooth Roller Scrapers	75.00
9070		(5) QA5 Grass Catcher Lip Extension *This kit extends the front lip of the grass catcher closer to the reel.*	45.00
9400		Canopy	425.00
9803		(5) 11 blade QA5 cutting units less front and rear rollers	11,120.00
9804		(5) 7 blade QA5 cutting units less front and rear rollers	10,710.00
		ATTACHMENTS FOR FIELD CONVERSION	
		Bedknives	
	ET17532	Bedknife, 4.8mm Fairway	See Parts
	MT7351	Bedknife, 2.0mm Ultra Low Cut	See Parts
	ET17534	Bedknife, 2.5mm Tournament	See Parts
	ET17533	Bedknife, 3.2 mm	See Parts
	ET11066	Bedknife, 3.2 mm with Hardened Insert	See Parts
	ET17767	Bedknife, Hi-cut Fairway 7.6 mm	See Parts

7500 E-Cut Hybrid Fairway Mower Diesel

Continued

CODE	ATTACHMENT IDENTIFIER	DESCRIPTION	SUGGESTED LIST PRICE USD ($)
		ATTACHMENTS FOR FIELD CONVERSION Continued...	
		Cutting Units:	
	BM24130	(1) QA5 Eleven Blade 22 In. Cutting Unit w/Adjustable 2.0 mm Bedknife, Less Front and Rear Roller & Motor	2,379.69
	BM24129	(1) QA5 Seven Blade 22 In. Heavy Section Blade Cutting Unit With Adjustable 4.8 mm Bedknife, Less Yokes, Front and Rear Roller & Motor	2,291.94
	BM22458	(1) QA5 Seven Blade 22 In. Heavy Section Blade Cutting Unit With Adjustable Bedknife, Less Yokes, Front Roller & Motor	See Parts
		Engine:	
	TCA19917	B20 Biodiesel Conversion Kit *This kit converts one machine to use B20 Diesel fuel.*	See Parts
		European CE Kit:	
	TCB11727	Compliance Kit *This kit must be ordered to meet the EU country of France shielding regulations.*	105.93
		Miscellaneous:	
	BM22671	(1) 22 In. Fairway Tender Conditioners (FTC) Shaft and Blades *Requires GTC/FTC Gear Drive (BM22469).*	497.56
	BM22761	(1) 22 In. Front Rotary Turf Brush	209.71
	BM22668	(1) 22 In. Rear Roller Power Brush *Requires Rear Roller Power Brush Drive (BM22527).*	141.24
	BM22995	(1) 22 In. Smooth Roller Scraper	16.06
	BM22469	(1) GTC/FTC Gear Drive	1,280.79
	BM23910	(1) QA5 Grass Catcher Lip Extension *This kit extends the front lip of the grass catcher closer to the reel.*	9.63
	BM22527	(1) Rear Roller Power Brush Drive *Requires 22 In. Rear Roller Power Brush (BM22668).*	386.27
	TCA19547	2"x 22" Machine Grooved Roller Scraper	See Parts
	BM23002	3"X22" GROOVE ROLLER SCRAPER *Not compatible with Fairway Tender Conditioners (FTC). Can be used on QA5 Cutting units by ordering (1) TCA19597 for each scraper from parts. Requires 3 for 2500's and 5 for Fairway mowers.*	146.59
	BTC10259	4WD Conversion Kit	4,629.89
	TCB11460	Electronic Cruise Control Kit	256.80
	BTC10217	Front High Capacity Catcher with large paddle clip (3 needed for front location on Fairway Mowers)	180.83
	BM22757	Grass Catcher Mounting Kit (set of 5) 1 needed per machine	108.07
	BTC10216	Grass Catcher with large paddle clip (22 Low Profile)	175.49

7500 E-Cut Hybrid Fairway Mower Diesel

Continued

CODE	ATTACHMENT IDENTIFIER	DESCRIPTION	SUGGESTED LIST PRICE USD ($)
		ATTACHMENTS FOR FIELD CONVERSION Continued...	
	TCU13823	Height of Cut Guage Bar	See Parts
	TCB11128	Hydraulic Down Pressure Kit	943.74
	TCU23674	John Deere Golf Operator Videos and All Products Safety Video DVD Set	See Parts
	BM24199	QA5 Grass Catcher Side Plate Insert *2 Needed for complete machine 2500's.* *1 Needed for front center location for 7500/8500 Fairway Mowers.* *1 Needed for 180 & 220 E-Cut Hybrid Walk Greens Mowers.* *3 Needed for front 8000 E-Cut Hybrid Fairway Mower.*	47.09
	BM23576	QA5 Slope Leveling Kit *1 per cutting unit.*	49.21
	BTC10501	Rear Grass Catcher Bail Kit *Requires 2 for complete machine & rear grass catcher BTC10408.*	182.97
	BTC10194	Wing Latch Kit *Needed to Secure Wing Grass Catchers when in Transport Position.*	282.49
		Reel Cutting Unit Counter Weights	
	BM22762	(1) Cutting Unit ONLY Counter Weight Kit *Needed if NOT installing Rear Roller Power Brush or GTC / FTC Kits.*	62.06
	BM22705	(1) QA5 Cutting Unit Brush Only Counter Weight Kit *Needed if only installing Rear Roller Power Brush on cutting unit.*	139.10
	BM22704	(1) QA5 FTC/GTC ONLY Counter Weight Kit *Needed if ONLY installing FTC/GTC on cutting unit.*	62.06
		Rollers:	
	BM24202	(1) 22 In. 2 In. (5 cm) Diameter Hollow Smooth Roller	166.91
	BM18481	(1) 22 In. 2 In. (5 cm) Diameter Machined Grooved Wide Solid Front Roller	237.54
	BE23416	(1) 22 In. 2 In. (5 cm) Diameter Machined Grooved Solid Front Roller *This Roller is 20mm Shorter Than BM18481.*	222.56
	BM19821	(1) 22 In. 2 In. (5 cm) Diameter Spiral Grooved Front Roller	293.19
	BTC10267	(1) 22 In. 2 In. (5cm) MT Grooved Roller *NOT FOR USE ON GREENS. Roller used to help reduce roller overlaps in fairways. For best results install in front and rear roller location of cutting unit.*	368.09
	BM17668	(1) 22 In. 3 In. (7.6 cm) Diameter Heavy Duty Grooved Disc Front Roller *Not compatible if FTC / GTC installed.* *3 In. Diameter Front Rollers Raise the Minimum Height of Cut.*	335.99

7500 E-Cut Hybrid Fairway Mower Diesel
Continued

CODE	ATTACHMENT IDENTIFIER	DESCRIPTION	SUGGESTED LIST PRICE USD ($)
		ATTACHMENTS FOR FIELD CONVERSION Continued...	
	BM19817	(1) 22 In. 3 In. (7.6 cm) Diameter Spiral Grooved Front Roller With Spiral End Caps *Not compatible if FTC / GTC installed.* *3 In. Diameter Front Rollers Raise the Minimum Height of Cut.*	406.60
	BM23566	(1) 2X22" MT SPIRAL Roller *NOT FOR USE ON GREENS. Roller used to help reduce roller overlaps in fairways. For best results install in front and rear roller location of cutting unit.*	368.09

7700 PrecisionCut Fairway Mower

Equipment for Base Machine

Gross Engine HP 37.1 (27.7 kW)
Net Engine HP 35.7(26.55 kW)
@ 2600 rpm
Yanmar Three Cylinder Turbo
Diesel Engine
Servo Controlled Hydrostatic
Drive
Two Wheel Drive
Power Steering with Straight
Track Steering Cylinder
Dual Disc Brakes
100 In. (2.54 m) Cutting Width
26.5x14-12 Turf Drive Tires
20x10-8 Turf Steer Tires
Deluxe Suspension Seat with
Armrests and Retractable
Seatbelt
White Box Controller with
On-Board Diagnostics
One-Touch Lift/Lower Reel Lever
Electric Over Hydraulic
Reel Lift
Rear Cutting Unit
Attaching Point
Foot Activated Tilt Steering
Column
On-Board Backlapping with
Adjustable Reel Speed Control
Five Hydraulic Quick-Tatch Reel
Motors
Quick-Tatch Cutting Units
Adjustable Hydraulic
Down Pressure
(5) QA7 22 In. (55.9 cm) Cutting
Units (Eight Blade)
7 In. (17.8 cm) Diameter
Reels with Reel to Bedknife
with Notch Adjustments
2 In. Diameter Machined Grooved
Solid Front Rollers
2-Post Roll Over Protection
Structure
6 LED Warning Light Instrument
Cluster with Hour Meter
Removable Rear Cutting Unit
Upstops
3 Front Work Lights
Command Arm Operator Controls
18 U.S. Gallon Fuel Capacity

CODE	ATTACHMENT IDENTIFIER	DESCRIPTION	SUGGESTED LIST PRICE USD ($)

Select One Code From Each Required Category

BASE MACHINE

F.O.B. Raleigh, North Carolina

1462TC	7700 PrecisionCut Fairway Mower	58,128.00

REEL CUTTING UNITS

1004	(5) Quick Adjust 7 (QA7) Eight Blade 22 In. Cutting Units with 6.3 mm bedknife Less Front Rollers, Motors and counter weight	In Base Price
1005	(5) Quick Adjust 7 (QA7) Ten Blade 22 In. E.S.P. Cutting Units with 6.3 mm bedknife, Less Front Rollers, Motors and counter weights	260.00
1010	Less Cutting Units	-13,015.00

REEL FRONT ROLLERS

2001	(5) 22 In. 3 In. (7.6 cm) Diameter Heavy Duty Grooved Disc Rollers	In Base Price
2002	(5) 22 In. 3 In. (7.6 cm) Diameter Spiral Grooved Front Rollers with Spiral End Caps	330.00
2010	Less Front Rollers, Roller Adjusters and Skid Shoes	-1,570.00

REEL CUTTING UNIT COUNTER WEIGHTS

4001	(5) QA7 Cutting Unit ONLY Counter Weight Kit *Needed if NOT installing Rear Roller Power Brush or GTC/FTC Kits.*	In Base Price
4002	(5) QA7 Reel Cutting Unit Brush Only Counter Weight Kit *Needed if only installing Rear Roller Power Brush on Cutting Unit.*	360.00
4003	(5) QA7 Cutting Unit FTC/GTC ONLY Counter Weight Kit	Same Price

7700 PrecisionCut Fairway Mower
Continued

CODE	ATTACHMENT IDENTIFIER	DESCRIPTION	SUGGESTED LIST PRICE USD ($)
		REEL CUTTING UNIT COUNTER WEIGHTS Continued... *Needed if ONLY installing FTC/GTC on cutting unit.*	
4010		Less Counter Weight kit *Ordered if Both Rear Roller Power Brush and FTC/GTC Kit installed.*	-290.00
		ATTACHMENTS - ORDER AS DESIRED	
		CE Kit:	
9330		Battery Label Kit *This kit must be ordered to meet battery labeling requirement in Brazil.*	No Charge
		Cutting Units:	
9010		(5) QA7 Vertical Cutting Units with Front Rollers Less Motors	9,020.00
		European CE Kit	
9100		European CE Conversion Kit, 7700 PrecisionCut Fairway Mower *Must be Ordered to Receive a PrecisionCut Fairway Mower Which Meets CE Requirements. Kit Includes Electric Hood Switch, Pictorial Decals and Operator's Manuals in English, French, German, Spanish and Italian.*	35.00
9102		European CE Reel Decal Kit for E.S.P. Cutting Units *Must be Ordered to Receive Decals that Converts (5) E.S.P. Cutting Units to Meet CE Mark Requirements.*	No Charge
9350		Compliance Kit *This kit must be ordered to meet the EU country of France shielding regulations.*	99.00
		Miscellaneous:	
9000		(5) Grass Catchers with large paddle clip Mounting Hardware for QA7 Cutting Units and Wing Latch	1,232.00
9015		(5) QA7 22" Fairway Tender Conditioners Shaft and Blades *Requires order code 9016.*	2,485.00
9016		(5) QA7 FTC Gear Drive *Requires order code 9015.*	5,985.00
9017		(5) QA7 22" Rear Roller Power Brushes *Requires order code 9018.*	660.00
9018		(5) QA7 Rear Roller Power Brush Drive *Requires order code 9017.*	1,805.00
9021		4WD Conversion Kit *Converts 2WD Traction Unit into 4WD Traction Unit.*	4,327.00
9022		(5) 22 In. 3 In. Diameter Heavy Duty Grooved Disc Roller Scrapers	685.00
9025		(5) 22 In. Smooth Roller Scrapers *Requires (5) TCA19587 from parts.*	198.00
9400		Canopy	425.00
9806		(5) 10 Blade QA7 cutting units less front roller	13,275.00

7700 PrecisionCut Fairway Mower
Continued

CODE	ATTACHMENT IDENTIFIER	DESCRIPTION	SUGGESTED LIST PRICE USD ($)
		ATTACHMENTS - ORDER AS DESIRED Continued...	
9807		(5) 8 Blade QA7 cutting units less front roller	13,015.00
		ATTACHMENTS FOR FIELD CONVERSION	
		CE Kit:	
	BTC10256	Battery Label Kit *This kit must be ordered to meet battery labeling requirement in Brazil.*	0.00
		Cutting Units:	
	BM22461	(1) QA7 Vertical Cutting Units with Front Rollers Less Motors	1,930.29
	BM22463	(1) Quick Adjust 7 (QA7) Eight Blade 22 In. Cutting Units Less Front Rollers and Motors	2,785.21
	BM24121	(1) Quick Adjust 7 (QA7) Eight Blade 22 In. Cutting Units with 6.3 mm bedknife Less Front Rollers, Motors and counter weight	2,785.21
	BM22464	(1) Quick Adjust 7 (QA7) Ten Blade 22 In. E.S.P. Cutting Units Less Front Rollers and Motors	2,840.86
	BM24122	(1) Quick Adjust 7 (QA7) Ten Blade 22 In. E.S.P. Cutting Units with 6.3 mm bedknife, Less Front Rollers, Motors and counter weights	2,840.86
		Engine:	
	TCA19917	B20 Biodiesel Conversion Kit *This kit converts one machine to use B20 Diesel fuel.*	See Parts
		European CE Kit:	
	TCB11727	Compliance Kit *This kit must be ordered to meet the EU country of France shielding regulations.*	105.93
		Miscellaneous:	
	BM22763	(1) Conversion Mounting Kit old Machine to New QA7 Cutting Units *Contains Parts to Convert (1) Cutting Unit.*	70.61
	BM22693	(1) QA7 22" Fairway Tender Conditioners Shaft and Blades *Also need order code 9016 (BM22673).*	531.79
	BM22712	(1) QA7 22" Rear Roller Power Brush *Also need order code 9018 (BM22674).*	141.24
	BM22674	(1) QA7 26 In. Rear Roller Power Brush Drive	386.27
	BM22673	(1) QA7 FTC Gear Drive *Also need order code 9015 (BM22693).*	1,280.79
	BM17684	(5) 22 In. Smooth Roller Scrapers *Requires (5) TCA19587 from parts.*	211.86
	BM22764	1) Conversion Mounting Kit 2009 Machine to Old Cutting ESP Cutting units *Contains Parts to Convert (1) Cutting Unit.*	70.61
	BM23002	3"X22" GROOVE ROLLER SCRAPER *Not compatible with Fairway Tender Conditioners (FTC).* *Can be used on QA5 Cutting units by ordering (1) TCA19597* *for each scraper from parts. Requires 3 for 2500's* *and 5 for Fairway mowers.*	146.59

7700 PrecisionCut Fairway Mower

Continued

CODE	ATTACHMENT IDENTIFIER	DESCRIPTION	SUGGESTED LIST PRICE USD ($)
		ATTACHMENTS FOR FIELD CONVERSION Continued...	
	BTC10259	4WD Conversion Kit	4,629.89
	AMT663	Bar Gauge Kit	See Parts
	MT1928	Bedknife, Low-Cut Fairway	See Parts
	TCB11126	Canopy	454.76
	TCB11460	Electronic Cruise Control Kit	256.80
	BTC10217	Front High Capacity Catcher with large paddle clip (3 needed for front location on Fairway Mowers)	180.83
	TCB11414	Front Wing Latch Kit (Set of 2) 1 per machine *Needed to Secure Wing Grass Catchers when in Transport Position.*	220.41
	BM22756	Grass Catcher Mounting Kit (set of 5) 1 needed per machine	204.37
	BTC10216	Grass Catcher with large paddle clip (22 Low Profile) *2 needed for complete machine for 2500#s.* *2 needed for rear locations for Fairway Mowers 7700/8700.* *1 needed for 180 & 220 E-Cut Hybrid Walk Greens Mower.*	175.49
	TCU13823	Height of Cut Guage Bar	See Parts
	TCU23674	John Deere Golf Operator Videos and All Products Safety Video DVD Set	See Parts
		Reel Cutting Unit Counter Weights	
	BM22762	(1) Cutting Unit ONLY Counter Weight Kit *Needed if NOT installing Rear Roller Power Brush or GTC / FTC Kits.*	62.06
	BM22704	(1) QA5 FTC/GTC ONLY Counter Weight Kit *Needed if ONLY installing FTC/GTC on cutting unit.*	62.06
	BM22721	(1) QA7 Cutting Unit Brush Only Counter Weight Kit *Needed if only installing Rear Roller Power Brush on 26" Cutting Unit.*	139.10
		Rollers:	
	BM17668	(1) 22 In. 3 In. (7.6 cm) Diameter Heavy Duty Grooved Disc Front Roller	335.99
	BM19817	(1) 22 In. 3 In. (7.6 cm) Diameter Spiral Grooved Front Roller With Spiral End Caps	406.60

8000 E-Cut Hybrid Fairway Mower Diesel

Equipment for Base Machine

Gross Engine HP 37.1 (27.7 kW)
Net Engine HP 35.7(26.55 kW) @ 2600 rpm
Three Cylinder Turbo Diesel Engine
Hydrostatic Drive
Three Wheel Drive
Power Steering with Straight Track Steering Cylinder
Dual Disc Brakes
80 In. (2.03 m) Cutting Width
24x13 -12 Smooth Drive Tires
24x13 -12 Smooth Steer Tires
Deluxe Suspension Seat with Armrest and Retractable Seatbelt
White Box Controller with On-Board Diagnostics
One-Touch Lift/Lower Reel Lever
Electric Over Hydraulic Reel Lift
Rear Cutting Unit Attaching Point
Foot Activated Tilt Steering Column
On-Board Backlapping with Adjustable Reel Speed Control
Five Electric Reel Motors
Quick-Tatch Cutting Units
Adjustable Hydraulic Down Pressure
(5)QA5 11 Blade 22 In. (55.9 cm) Cutting Units with Speed Link Height of Cut System
2 In. Diameter Machined Grooved Solid Front Rollers
2-Post Roll Over Protection Structure
6 LED Warning Light Instrument Cluster with Hour Meter
3 Front Work Lights
Command Arm Operator Controls
13 U.S. Gallon Fuel Capacity
John Deere Golf Operator Videos and All Products Safety Video DVD Set

CODE	ATTACHMENT IDENTIFIER	DESCRIPTION	SUGGESTED LIST PRICE USD ($)

Select One Code From Each Required Category

BASE MACHINE

F.O.B. Raleigh, North Carolina

1723TC	8000 E-Cut Hybrid Fairway Mower Diesel	53,748.00

REEL CUTTING UNITS

1004	(5) Quick Adjust 5 (QA5) Eleven Blade 18 In. Cutting Units with Yokes, less Front Rollers, Motors and Counter Weight	In Base Price
1005	(5) Quick Adjust 5 (QA5) Seven Blade 18 In. Heavy Section Standard Cutting Units with 4.8 mm bedknife, Yokes, less Front Rollers, Motors and Counter Weights	-1,235.00
1010	Less Cutting Units	-11,945.00

REEL FRONT ROLLERS

2001	(5) 18 In. 3 In. (7.6 cm) Diameter Heavy Duty Grooved Disc Front Rollers *Not compatible if FTC installed.* *3 In. Diameter Front Rollers Raise the Minimum Height of Cut.*	780.00
2002	(5) 18 In. 2 In. (5 cm) Diameter Machined Smooth Solid Front Roller	Same Price
2003	(5) 18 In. 2 In. (5cm) Diameter Grooved Front Rollers	In Base Price
2004	(5) 18 In. 2 In. (5cm) Spiral Grooved Front Rollers with Spiral end Caps	780.00
2005	(5) 18 In. 2 In. (5 cm) MT Spiral Roller	430.00
2006	(5) 18 In. 2 In. (5 cm) MT Grooved Roller	780.00
2010	Less Front Rollers	-940.00

8000 E-Cut Hybrid Fairway Mower Diesel

Continued

CODE	ATTACHMENT IDENTIFIER	DESCRIPTION	SUGGESTED LIST PRICE USD ($)
		REEL REAR ROLLERS	
2501		(5) 18 In. 2 In (5cm) Diameter Hollow Smooth Roller	In Base Price
2502		(5) 18 In. 2 In. (5cm) MT Spiral Roller *NOT FOR USE ON GREENS. Roller used to help reduce roller overlaps in fairways.* *For best results install in front and rear roller location of cutting unit.*	590.00
2503		(5) 18 In. 2 In. (5cm) MT Grooved Roller *NOT FOR USE ON GREENS. Roller used to help reduce roller overlaps in fairways.* *For best results install in front and rear roller location of cutting unit.*	940.00
2510		Less Rear Rollers	-780.00
		REEL CUTTING UNIT COUNTER WEIGHTS	
4001		(5) QA5 Cutting Unit ONLY Counter Weight Kit *Needed if NOT installing Rear Roller Power Brush or GTC/FTC Kits.*	In Base Price
4002		(5) QA5 Cutting Unit Brush Only Counter Weight Kit *Needed if only installing Rear Roller Power Brush on Cutting Unit.*	360.00
4003		(5) QA5 Cutting Unit FTC/GTC ONLY Counter Weight Kit *Needed if ONLY installing FTC/GTC on cutting unit.*	Same Price
4010		Less Counter Weight kit *Ordered if Both Rear Roller Power Brush and FTC/GTC Kit installed.*	-290.00
		ATTACHMENTS - ORDER AS DESIRED	
		CE Kit:	
		European CE Kit	
9100		European CE Conversion Kit, 8000 E-Cut Hybrid Fairway Mower *Must be Ordered to Receive a PrecisionCut Fairway Mower Which Meets CE Requirements. Kit Includes Electric Hood Switch, Pictorial Decals and Operator's Manuals in English, French, German, Spanish and Italian.*	35.00
9102		European CE Reel Decal Kit for QA5 Cutting Units *Must be Ordered to Receive Decals that Converts (5) QA5 Cutting Units to Meet CE Mark Requirements.*	No Charge
9350		Compliance Kit *This kit must be ordered to meet the EU country of France shielding regulations.*	99.00
		Miscellaneous:	
9733		(5) Front Grass Catchers with large paddle clip, shield extensions with Mounting Hardware for 18" QA5 Cutting Units, Rear Bail and Catchers w/handles and grass catcher side plate inserts. *Note: Cutting unit shield extensions should only be used in dry conditions.*	1,506.00
9000		(5) Grass Catchers with large paddle clip, shield extensions with Mounting Hardware for 18" QA5 Cutting Units and grass catcher side plate inserts.	1,206.00
9015		(5) QA5 18"" Fairway Tender Conditioners Shaft (FTC) and Blades *Also need order code 9016 (BM22469).* *Not compatible with 3 In roller option 2001 (BM23016).*	2,325.00
9016		(5) QA5 FTC Gear Drive *Also need order code 9015 (BM22670).*	5,985.00

8000 E-Cut Hybrid Fairway Mower Diesel

Continued

CODE	ATTACHMENT IDENTIFIER	DESCRIPTION	SUGGESTED LIST PRICE USD ($)
		ATTACHMENTS - ORDER AS DESIRED Continued...	
9017		(5) QA5 18 In. Rear Roller Power Brushes *Also need order code 9018 (BM22527).*	660.00
9018		(5) QA5 Rear Roller Power Brush Drive *Also need order code 9017 (BM22667).*	1,805.00
9025		(5) 18 In. Smooth Roller Scrapers	75.00
9029		(5) 18 In. 3 In. Diameter Heavy Duty Grooved Roller Scrapers *Not compatible with Fairway Tender Conditioner option 9015 (BM22670).*	630.00
9070		(5) QA5 Grass Catcher Lip Extension *This kit extends the front lip of the grass catcher closer to the reel.*	45.00
9803		(5) 11 blade QA5 cutting units less front and rear rollers	11,945.00
9804		(5) 7 blade QA5 cutting units less front and rear rollers	10,710.00
		ATTACHMENTS FOR FIELD CONVERSION	
		Bedknives	
	MT7350	Bedknife, 2.0 mm Ultra Low-Cut	See Parts
	MT4846	Bedknife, 2.5 mm Tournament	See Parts
	ET17751	Bedknife, Hi-cut Fairway 12 mm	See Parts
	TCU31422	Bedknife, Hi-cut Fairway 7.6 mm	See Parts
	TCU252299	Bedknife, Lo-cut Fairway 4.8 mm	See Parts
	MT3883	Bedknife, Ultra Lo-cut Fairway 6.3 mm	See Parts
		Cutting Units:	
	BM22479	(1) Quick Adjust 5 (QA5) Eleven Blade 18 In. Cutting Units with Yokes, less Front Rollers, Motors and Counter Weight *Includes Rear Roller*	2,556.23
	BM24128	(1) Quick Adjust 5 (QA5) Eleven Blade 18 In. Cutting Units with Yokes, less Front and Rear Rollers, Motors and Counter Weight	2,556.23
	BM24127	(1) Quick Adjust 5 (QA5) Seven Blade 18 In. Heavy Section Standard Cutting Units with 4.8mm bedknife, Less Front and Rear Rollers, Motors and Counter Weights	2,291.94
		Engine:	
	TCA19917	B20 Biodiesel Conversion Kit *This kit converts one machine to use B20 Diesel fuel.*	See Parts
		Miscellaneous:	
	TCA19585	(1) 18 In 2 In Grooved Roller Scraper *Need to order 5 for completed machine.*	See Parts
	BM23014	(1) 18 In. 3 In. Diameter Heavy Duty Grooved Roller Scraper *Not compatible with Fairway Tender Conditioner option 9015 (BM22670).*	134.81
	BTC10215	(1) 18 In. Front Grass Catcher with large paddle clip	191.53

8000 E-Cut Hybrid Fairway Mower Diesel

Continued

CODE	ATTACHMENT IDENTIFIER	DESCRIPTION	SUGGESTED LIST PRICE USD ($)
		ATTACHMENTS FOR FIELD CONVERSION Continued...	
	BTC10405	(1) 18 In. Rear Grass Catcher Bail System *Compatible with with rear grass catcher BTC10406.*	240.90
	BTC10406	(1) 18 In. Rear Grass Catcher with Handles *Compatible with with rear grass catcher bail system BTC10405.*	153.01
	BTC10214	(1) 18 In. Rear Grass Catcher with large paddle clip *Not compatible with with rear bail system BTC10405.*	186.19
	BM23015	(1) 18 In. Smooth Rear Roller Scraper	16.06
	BM22469	(1) GTC/FTC Gear Drive	1,280.79
	BM22670	(1) QA5 18 In. Fairway Tender Conditioners Shaft (FTC) and Blades *Requires GTC/FTC Gear Drive (BM22469).* *Not compatible with 3 In roller option 2001 (BM23016).*	497.56
	BM22667	(1) QA5 18 In. Rear Roller Power Brushes *Requires Rear Roller Power Brush Drive (BM22527).*	141.24
	BM23910	(1) QA5 Grass Catcher Lip Extension *This kit extends the front lip of the grass catcher closer to the reel.*	9.63
	BM22527	(1) Rear Roller Power Brush Drive *Requires 22 In. Rear Roller Power Brush (BM22668).*	386.27
	TCB11728	Compliance Kit *This kit must be ordered to meet the EU country of France shielding regulations.*	105.93
	TCB11460	Electronic Cruise Control Kit	256.80
	BM22757	Grass Catcher Mounting Kit (set of 5) 1 needed per machine	108.07
	TCU13823	Height of Cut Guage Bar	See Parts
	BM24199	QA5 Grass Catcher Side Plate Insert *2 Needed for complete machine 2500's.* *1 Needed for front center location for 7500/8500 Fairway Mowers.* *1 Needed for 180 & 220 E-Cut Hybrid Walk Greens Mowers.* *3 Needed for front 8000 E-Cut Hybrid Fairway Mower.*	47.09
	BM23576	QA5 Slope Leveling Kit *1 per cutting unit.*	49.21
	TCU25388	UltraTrac Fairway Mower Tire	See Parts
		Reel Cutting Unit Counter Weights	
	BM22762	(1) Cutting Unit ONLY Counter Weight Kit *Needed if NOT installing Rear Roller Power Brush or GTC / FTC Kits.*	62.06
	BM22705	(1) QA5 Cutting Unit Brush Only Counter Weight Kit *Needed if only installing Rear Roller Power Brush on cutting unit.*	139.10
	BM22704	(1) QA5 FTC/GTC ONLY Counter Weight Kit *Needed if ONLY installing FTC/GTC on cutting unit.*	62.06
		Rollers:	

8000 E-Cut Hybrid Fairway Mower Diesel
Continued

CODE	ATTACHMENT IDENTIFIER	DESCRIPTION	SUGGESTED LIST PRICE USD ($)
		ATTACHMENTS FOR FIELD CONVERSION Continued...	
	BM24204	(1) 18 In. 2 In. (5 cm) Diameter Hollow Smooth Roller	166.91
	BM20561	(1) 18 In. 2 In. (5 cm) Diameter Machined Smooth Solid Roller	201.16
	BM22868	(1) 18 In. 2 In. (5cm) Diameter Grooved Front Rollers	201.16
	BM22879	(1) 18 In. 2 In. (5cm) Spiral Grooved Front Roller with Spiral end Cap	368.09
	TCA19509	(1) 18 In. 3 In (7.6 cm) Diameter Smooth Front or Rear Roller (Hollow) *Not compatible with Fairway Tender Conditioners (FTC).*	See Parts
	BM23016	(1) 18 In. 3 In. (7.6 cm) Diameter Heavy Duty Grooved Disc Front Rollers *Not compatible if FTC installed.* *3 In. Diameter Front Rollers Raise the Minimum Height of Cut.*	368.09
	BTC10281	(1) 18 in. 2 in. (5cm) MT Grooved Roller *NOT FOR USE ON GREENS. Roller used to help reduce roller overlaps in fairways. For best results install in front and rear roller location of cutting unit.*	368.09
	BM23567	(1) 2X18" MT Spiral Roller *NOT FOR USE ON GREENS. Roller used to help reduce roller overlaps in fairways. For best results install in front and rear roller location of cutting unit.*	293.19

8500 PrecisionCut Fairway Mower

Equipment for Base Machine

Gross Engine HP 43.1 (32.2 kW)
Net Engine HP 41.7 (31.1 kW)
@ 2600 rpm
Three Cylinder Turbo
Diesel Engine
Servo Controlled Hydrostatic
Drive
Two Wheel Drive
Power Steering with Straight
Track Steering Cylinder
Dual Disc Brakes
100 In. (2.54 m) Cutting Width
26.5x14-12 Turf Drive Tires
20x10-8 Turf Steer Tires
Deluxe Suspension Seat with
Armrests and Retractable
Seatbelt
White Box Controller with
On-Board Diagnostics
One-Touch Lift/Lower Reel Lever
Electric Over Hydraulic
Reel Lift
Rear Cutting Unit
Attaching Point
Foot Activated Tilt Steering
Column
On-Board Backlapping with
Adjustabel Reel Speed Control
Five Standard Hydraulic Reel
Motors
Quick-Tatch Cutting Units
Adjustable Hydraulic
Down Pressure
(5) QA5 7 Blade 22 In.
(55.9 cm)Cutting Units
with Speed Link Height of
Cut System
5 In. (12.7 cm) Diameter Reels
Heavy Section Reel Blades with
Adjustable Bedknife with Nocth
Adjustments
2 In. Diameter Machined Grooved
Solid Front Rollers
2-Post Roll Over Protection
Structure
6 LED Warning Light Instrument
Cluster with Hour Meter
Removable Rear Cutting Unit
Upstops
3 Front Work Lights
Command Arm Operator Controls
18 U.S. Gallon Fuel Capacity

CODE	ATTACHMENT IDENTIFIER	DESCRIPTION	SUGGESTED LIST PRICE USD ($)

Select One Code From Each Required Category

BASE MACHINE

F.O.B. Raleigh, North Carolina

1473TC	8500 PrecisionCut Fairway Mower	58,260.00

REEL CUTTING UNITS

1004	(5) Quick Adjust 5 (QA5) Seven Blade 22 In. Heavy Section Standard Cutting Units With Adjustable 4.8 mm Bedknife, Less Front And Rear Rollers	In Base Price
1005	(5) Quick Adjust 5 (QA5) Eleven Blade 22 In. (55.9 cm) Cutting Units With Adjustable 2.0mm Bedknife, 5 In. (12.7 cm) Diameter Reels, Less Front Rollers	410.00
1010	Less Cutting Units	-10,710.00

REEL FRONT ROLLERS

2001	(5) 22 In. 3 In. (7.6 cm) Diameter Heavy Duty Grooved Disc Rollers *Not compatible if FTC installed.* *3 In. Diameter Front Rollers Raise* *the Minimum Height of Cut.*	530.00
2002	(5) 22 In. 2 In. (5cm) Diameter Machined Grooved Solid Front Rollers	In Base Price
2003	(5) 22 In. 2 In. (5cm) Diameter Spiral Grooved Front Rollers	330.00
2004	(5) 22 In. 3 In. (7.6 cm) Diameter Spiral Grooved Front Rollers with Spiral End Caps *Not compatible if FTC installed.* *3 In. Diameter Front Rollers Raise* *the Minimum Height of Cut.*	860.00

8500 PrecisionCut Fairway Mower
Continued

CODE	ATTACHMENT IDENTIFIER	DESCRIPTION	SUGGESTED LIST PRICE USD ($)
		REEL FRONT ROLLERS Continued...	
2005		(5) 22 In. 2 In. (5cm) MT Spiral Roller *NOT FOR USE ON GREENS. Roller used to help reduce roller overlaps in fairways. For best results install in front and rear roller location of cutting unit.*	680.00
2006		(5) 22 In. 2 In. (5cm) MT Grooved Roller	680.00
2007		(5) 22 In. 2 In. (5 cm) Diameter Hollow Smooth Roller	-260.00
2010		Less Front Rollers, Roller Adjusters and Skid Shoes	-1,040.00
		REEL REAR ROLLERS	
2501		(5) 22 In. 2 In (5cm) Diameter Hollow Smooth Roller	In Base Price
2502		(5) 22 In. 2 In. (5cm) MT Spiral Roller *NOT FOR USE ON GREENS. Roller used to help reduce roller overlaps in fairways. For best results install in front and rear roller location of cutting unit.*	940.00
2503		(5) 22 In. 2 In. (5cm) MT Grooved Roller *NOT FOR USE ON GREENS. Roller used to help reduce roller overlaps in fairways. For best results install in front and rear roller location of cutting unit.*	940.00
2510		Less Rear Rollers	-780.00
		REEL CUTTING UNIT COUNTER WEIGHTS	
4001		(5) QA5 Cutting Unit ONLY Counter Weight Kit *Needed if NOT installing Rear Roller Power Brush or GTC/FTC Kits.*	In Base Price
4002		(5) QA5 Cutting Unit Brush Only Counter Weight Kit *Needed if only installing Rear Roller Power Brush on Cutting Unit.*	360.00
4003		(5) QA5 Cutting Unit FTC/GTC ONLY Counter Weight Kit *Needed if ONLY installing FTC/GTC on cutting unit.*	Same Price
4010		Less Counter Weight kit	-290.00
		ATTACHMENTS - ORDER AS DESIRED	
		CE Kit:	
9330		Battery Label Kit *This kit must be ordered to meet battery labeling requirement in Brazil.*	No Charge
		Cutting Units:	
9010		(5) Vertical Cutting Units with Front Rollers Less Motors	11,005.00
		European CE Kit	
9100		European CE Conversion Kit, 8500 PrecisionCut Fairway Mower *Must be Ordered to Receive a PrecisionCut Fairway Mower Which Meets CE Requirements. Kit Includes Electric Hood Switch, Pictorial Decals and Operator's Manuals in English, French, German, Spanish and Italian.*	35.00
9102		European CE Reel Decal Kit for Seven Blade Standard Cutting Units *Must be Ordered to Receive Decals that Converts (5) Seven Blade Standard Cutting Units to Meet CE Mark Requirements.*	No Charge
9350		Compliance Kit *This kit must be ordered to meet the EU country of France shielding regulations.*	99.00
		Miscellaneous:	

8500 PrecisionCut Fairway Mower

Continued

CODE	ATTACHMENT IDENTIFIER	DESCRIPTION	SUGGESTED LIST PRICE USD ($)
		ATTACHMENTS - ORDER AS DESIRED Continued...	
9733		(5) Front Grass Catchers with large paddle clip Mounting Hardware for QA5 Cutting Units, Rear Bail and Catchers w/handles, Wing Latch Kit and grass catcher side plate inserts kit for front center. *Note: Cutting unit shield extensions should only be used in dry conditions.*	1,524.00
9015		(5) 22 In. Fairway Tender Conditioners (FTC) Shaft and Blades *Requires order code 9016.* *3" roller when used on the QA5 is not compatible with the FTC.*	2,325.00
9016		(5) QA5 GTC/FTC Gear Drive *Requires order code 9015 (BM22670).* *3" roller when used on the QA5 is not compatible with the FTC.*	5,985.00
9017		(5) 22 In. Rear Roller Power Brushes *Requires order code 9018 (BM22527).*	660.00
9018		(5) Rear Roller Power Brush Drive *Requires order code 9017 (BM22668).*	1,805.00
9019		(5) 22 In. Front Rotary Turf Brush *Can not be used with FTC/GTC 9015.* *Requires order code 9016.* *3" roller when used on the QA5 is not compatible with the FTC.*	980.00
9020		Hydraulic Down Pressure Kit	882.00
9021		4WD Conversion Kit *Converts 2WD Traction Unit into 4WD Traction Unit.*	4,327.00
9025		(5) 22 In. Smooth Roller Scrapers	75.00
9070		(5) QA5 Grass Catcher Lip Extension *This kit extends the front lip of the grass catcher closer to the reel.*	45.00
9400		Canopy	425.00
9803		(5) 11 blade QA5 cutting units less front and rear rollers	11,120.00
9804		(5) 7 blade QA5 cutting units less front and rear rollers	10,710.00
		ATTACHMENTS FOR FIELD CONVERSION	
		Bedknives	
	ET17532	Bedknife, 4.8mm Fairway	See Parts
	MT7351	Bedknife, 2.0mm Ultra Low Cut	See Parts
	ET17534	Bedknife, 2.5mm Tournament	See Parts
	ET17533	Bedknife, 3.2 mm	See Parts
	ET11066	Bedknife, 3.2 mm with Hardened Insert	See Parts
	ET17767	Bedknife, Hi-cut Fairway 7.6 mm	See Parts

8500 PrecisionCut Fairway Mower
Continued

CODE	ATTACHMENT IDENTIFIER	DESCRIPTION	SUGGESTED LIST PRICE USD ($)
		ATTACHMENTS FOR FIELD CONVERSION Continued...	
		Cutting Units:	
	BM22460	(1) QA5 22 In. Vertical Cutting Unit With Front Roller Less Motor	2,355.07
	BM24130	(1) QA5 Eleven Blade 22 In. Cutting Unit w/Adjustable 2.0 mm Bedknife, Less Front and Rear Roller & Motor	2,379.69
	BM24129	(1) QA5 Seven Blade 22 In. Heavy Section Blade Cutting Unit With Adjustable 4.8 mm Bedknife, Less Yokes, Front and Rear Roller & Motor	2,291.94
	BM22458	(1) QA5 Seven Blade 22 In. Heavy Section Blade Cutting Unit With Adjustable Bedknife, Less Yokes, Front Roller & Motor	See Parts
		Engine:	
	TCA19917	B20 Biodiesel Conversion Kit *This kit converts one machine to use B20 Diesel fuel.*	See Parts
		European CE Kit:	
	TCB11727	Compliance Kit *This kit must be ordered to meet the EU country of France shielding regulations.*	105.93
		Miscellaneous:	
	BM22671	(1) 22 In. Fairway Tender Conditioners (FTC) Shaft and Blades *Requires GTC/FTC Gear Drive (BM22469).*	497.56
	BM22761	(1) 22 In. Front Rotary Turf Brush	209.71
	BM22668	(1) 22 In. Rear Roller Power Brush *Requires Rear Roller Power Brush Drive (BM22527).*	141.24
	BM22995	(1) 22 In. Smooth Roller Scraper	16.06
	BM22469	(1) GTC/FTC Gear Drive	1,280.79
	BM23910	(1) QA5 Grass Catcher Lip Extension *This kit extends the front lip of the grass catcher closer to the reel.*	9.63
	BM22527	(1) Rear Roller Power Brush Drive *Requires 22 In. Rear Roller Power Brush (BM22668).*	386.27
	TCA19547	2"x 22" Machine Grooved Roller Scraper	See Parts
	BM23002	3"X22" GROOVE ROLLER SCRAPER *Not compatible with Fairway Tender Conditioners (FTC).* *Can be used on QA5 Cutting units by ordering (1) TCA19597 for each scraper from parts. Requires 3 for 2500's and 5 for Fairway mowers.*	146.59
	BTC10259	4WD Conversion Kit	4,629.89
	TCB11460	Electronic Cruise Control Kit	256.80
	BTC10217	Front High Capacity Catcher with large paddle clip (3 needed for front location on Fairway Mowers)	180.83
	BM22757	Grass Catcher Mounting Kit (set of 5) 1 needed per machine	108.07

8500 PrecisionCut Fairway Mower
Continued

CODE	ATTACHMENT IDENTIFIER	DESCRIPTION	SUGGESTED LIST PRICE USD ($)
		ATTACHMENTS FOR FIELD CONVERSION Continued...	
	BTC10216	Grass Catcher with large paddle clip (22 Low Profile)	175.49
	TCU13823	Height of Cut Guage Bar	See Parts
	TCB11128	Hydraulic Down Pressure Kit	943.74
	TCU23674	John Deere Golf Operator Videos and All Products Safety Video DVD Set	See Parts
	BM24199	QA5 Grass Catcher Side Plate Insert *2 Needed for complete machine 2500's.* *1 Needed for front center location for 7500/8500 Fairway Mowers.* *1 Needed for 180 & 220 E-Cut Hybrid Walk Greens Mowers.* *3 Needed for front 8000 E-Cut Hybrid Fairway Mower.*	47.09
	BM23576	QA5 Slope Leveling Kit *1 per cutting unit.*	49.21
	BTC10501	Rear Grass Catcher Bail Kit *Requires 2 for complete machine & rear grass catcher BTC10408.*	182.97
	BTC10194	Wing Latch Kit *Needed to Secure Wing Grass Catchers when in Transport Position.*	282.49
		Reel Cutting Unit Counter Weights	
	BM22762	(1) Cutting Unit ONLY Counter Weight Kit *Needed if NOT installing Rear Roller Power Brush or GTC / FTC Kits.*	62.06
	BM22705	(1) QA5 Cutting Unit Brush Only Counter Weight Kit *Needed if only installing Rear Roller Power Brush on cutting unit.*	139.10
	BM22704	(1) QA5 FTC/GTC ONLY Counter Weight Kit *Needed if ONLY installing FTC/GTC on cutting unit.*	62.06
		Rollers:	
	BM24202	(1) 22 In. 2 In. (5 cm) Diameter Hollow Smooth Roller	166.91
	BM18481	(1) 22 In. 2 In. (5 cm) Diameter Machined Grooved Wide Solid Front Roller	237.54
	BE23416	(1) 22 In. 2 In. (5 cm) Diameter Machined Grooved Solid Front Roller *This Roller is 20mm Shorter Than BM18481.*	222.56
	BM19821	(1) 22 In. 2 In. (5 cm) Diameter Spiral Grooved Front Roller	293.19
	BTC10267	(1) 22 In. 2 In. (5cm) MT Grooved Roller *NOT FOR USE ON GREENS. Roller used to help reduce roller overlaps in fairways. For best results install in front and rear roller location of cutting unit.*	368.09
	BM17668	(1) 22 In. 3 In. (7.6 cm) Diameter Heavy Duty Grooved Disc Front Roller *Not compatible if FTC / GTC installed.* *3 In. Diameter Front Rollers Raise the Minimum Height of Cut.*	335.99

8500 PrecisionCut Fairway Mower
Continued

CODE	ATTACHMENT IDENTIFIER	DESCRIPTION	SUGGESTED LIST PRICE USD ($)
		ATTACHMENTS FOR FIELD CONVERSION Continued...	
	BM19817	(1) 22 In. 3 In. (7.6 cm) Diameter Spiral Grooved Front Roller With Spiral End Caps *Not compatible if FTC / GTC installed.* *3 In. Diameter Front Rollers Raise the Minimum Height of Cut.*	406.60
	BM23566	(1) 2X22" MT SPIRAL Roller *NOT FOR USE ON GREENS. Roller used to help reduce roller overlaps in fairways. For best results install in front and rear roller location of cutting unit.*	368.09

8500 E-Cut Hybrid Fairway Mower -Diesel

Equipment for Base Machine

Gross Engine HP* 43.1 (32.2 kW)
Net Engine HP 41.7 (31.1 kW) @ 2600 rpm
Three Cylinder Turbo Diesel Engine
Servo Controlled Hydrostatic Drive
Two Wheel Drive
Power Steering with Straight Track Steering Cylinder
Dual Disc Brakes
100 In. (2.54 m) Cutting Width
26.5x14-12 Turf Drive Tires
20x10-8 Turf Steer Tires
Deluxe Suspension Seat with Armrests and Retractable Seatbelt
White Box Controller with On-Board Diagnostics
One-Touch Lift/Lower Reel Lever Electric Over Hydraulic Reel Lift
Patented Rear Cutting Unit Attaching Point
Foot Activated Tilt Steering Column
On-Board Backlapping with Adjustabel Reel Speed Control
Five Electric Reel Motors
Quick-Tatch Cutting Units
Adjustable Hydraulic Down Pressure
(5) QA5 7 Blade 22 In. (55.9 cm)Cutting Units with Speed Link Height of Cut System
5 In. (12.7 cm) Diameter Reels
Heavy Section Reel Blades with Adjustable Bedknife with Notch Adjustments
2 In. Diameter Machined Grooved Solid Front Rollers and hollow smooth rear rollers
2-Post Roll Over Protection Structure
6 LED Warning Light Instrument Cluster with Hour Meter
Removable Rear Cutting Unit Upstops
3 Front Work Lights
Command Arm Operator Controls
18 U.S. Gallon Fuel Capacity

CODE	ATTACHMENT IDENTIFIER	DESCRIPTION	SUGGESTED LIST PRICE USD ($)

Select One Code From Each Required Category

BASE MACHINE

F.O.B. Raleigh, North Carolina

1752TC	8500 E-Cut Hybrid Fairway Mower -Diesel	61,058.00

REEL CUTTING UNITS

1004	(5) Quick Adjust 5 (QA5) Seven Blade 22 In. Heavy Section Standard Cutting Units With Adjustable 4.8 mm Bedknife, Less Front And Rear Rollers	In Base Price
1005	(5) Quick Adjust 5 (QA5) Eleven Blade 22 In. (55.9 cm) Cutting Units With Adjustable 2.0mm Bedknife, 5 In. (12.7 cm) Diameter Reels, Less Front Rollers	410.00
1010	Less Cutting Units	-10,710.00

REEL FRONT ROLLERS

2001	(5) 22 In. 3 In. (7.6 cm) Diameter Heavy Duty Grooved Disc Rollers *Not compatible if FTC installed.* *3 In. Diameter Front Rollers Raise* *the Minimum Height of Cut.*	530.00
2002	(5) 22 In. 2 In. (5cm) Diameter Machined Grooved Solid Front Rollers	In Base Price
2003	(5) 22 In. 2 In. (5cm) Diameter Spiral Grooved Front Rollers	330.00
2004	(5) 22 In. 3 In. (7.6 cm) Diameter Spiral Grooved Front Rollers with Spiral End Caps *Not compatible if FTC installed.* *3 In. Diameter Front Rollers Raise* *the Minimum Height of Cut.*	860.00

8500 E-Cut Hybrid Fairway Mower -Diesel

Continued

CODE	ATTACHMENT IDENTIFIER	DESCRIPTION	SUGGESTED LIST PRICE USD ($)
		REEL FRONT ROLLERS Continued...	
2005		(5) 22 In. 2 In. (5cm) MT Spiral Roller	680.00
2006		(5) 22 In. 2 In. (5cm) MT Grooved Roller	680.00
2007		(5) 22 In. 2 In. (5 cm) Diameter Hollow Smooth Roller	-260.00
2010		Less Front Rollers, Roller Adjusters and Skid Shoes	-1,040.00
		REEL REAR ROLLERS	
2501		(5) 22 In. 2 In (5cm) Diameter Hollow Smooth Roller	In Base Price
2502		(5) 22 In. 2 In. (5cm) MT Spiral Roller *NOT FOR USE ON GREENS. Roller used to help reduce roller overlaps in fairways. For best results install in front and rear roller location of cutting unit.*	940.00
2503		(5) 22 In. 2 In. (5cm) MT Grooved Roller *NOT FOR USE ON GREENS. Roller used to help reduce roller overlaps in fairways. For best results install in front and rear roller location of cutting unit.*	940.00
2510		Less Rear Rollers	-780.00
		REEL CUTTING UNIT COUNTER WEIGHTS	
4001		(5) QA5 Cutting Unit ONLY Counter Weight Kit *Needed if NOT installing Rear Roller Power Brush or GTC/FTC Kits.*	In Base Price
4002		(5) QA5 Cutting Unit Brush Only Counter Weight Kit *Needed if only installing Rear Roller Power Brush on Cutting Unit.*	360.00
4003		(5) QA5 Cutting Unit FTC/GTC ONLY Counter Weight Kit *Needed if ONLY installing FTC/GTC on cutting unit.*	Same Price
4010		Less Counter Weight kit	-290.00
		ATTACHMENTS - ORDER AS DESIRED	
		CE Kit:	
9330		Battery Label Kit *This kit must be ordered to meet battery labeling requirement in Brazil.*	No Charge
		European CE Kit	
9100		European CE Conversion Kit, 8500 PrecisionCut Fairway Mower *Must be Ordered to Receive a PrecisionCut Fairway Mower Which Meets CE Requirements. Kit Includes Electric Hood Switch, Pictorial Decals and Operator's Manuals in English, French, German, Spanish and Italian.*	35.00
9102		European CE Reel Decal Kit for Seven Blade Standard Cutting Units *Must be Ordered to Receive Decals that Converts (5) Seven Blade Standard Cutting Units to Meet CE Mark Requirements.*	No Charge
9350		Compliance Kit *This kit must be ordered to meet the EU country of France shielding regulations.*	99.00
		Miscellaneous:	
9733		(5) Front Grass Catchers with large paddle clip Mounting Hardware for QA5 Cutting Units, Rear Bail and Catchers w/handles, Wing Latch Kit and grass catcher side plate inserts kit for front center. *Note: Cutting unit shield extensions should only be used in dry conditions.*	1,524.00

8500 E-Cut Hybrid Fairway Mower -Diesel

Continued

CODE	ATTACHMENT IDENTIFIER	DESCRIPTION	SUGGESTED LIST PRICE USD ($)
		ATTACHMENTS - ORDER AS DESIRED Continued...	
9015		(5) 22 In. Fairway Tender Conditioners (FTC) Shaft and Blades *Requires order code 9016.* *3" roller when used on the QA5 is not compatible with the FTC.*	2,325.00
9016		(5) QA5 GTC/FTC Gear Drive *Requires order code 9015 (BM22670).* *3" roller when used on the QA5 is not compatible with the FTC.*	5,985.00
9017		(5) 22 In. Rear Roller Power Brushes *Requires order code 9018 (BM22527).*	660.00
9018		(5) Rear Roller Power Brush Drive *Requires order code 9017 (BM22668).*	1,805.00
9019		(5) 22 In. Front Rotary Turf Brush *Can not be used with FTC/GTC 9015.* *Requires order code 9016.* *3" roller when used on the QA5 is not compatible with the FTC.*	980.00
9020		Hydraulic Down Pressure Kit	882.00
9021		4WD Conversion Kit *Converts 2WD Traction Unit into 4WD Traction Unit.*	4,327.00
9025		(5) 22 In. Smooth Roller Scrapers	75.00
9070		(5) QA5 Grass Catcher Lip Extension *This kit extends the front lip of the grass catcher closer to the reel.*	45.00
9400		Canopy	425.00
9803		(5) 11 blade QA5 cutting units less front and rear rollers	11,120.00
9804		(5) 7 blade QA5 cutting units less front and rear rollers	10,710.00
		ATTACHMENTS FOR FIELD CONVERSION	
		Bedknives	
	ET17532	Bedknife, 4.8mm Fairway	See Parts
	MT7351	Bedknife, 2.0mm Ultra Low Cut	See Parts
	ET17534	Bedknife, 2.5mm Tournament	See Parts
	ET17533	Bedknife, 3.2 mm	See Parts
	ET11066	Bedknife, 3.2 mm with Hardened Insert	See Parts
	ET17767	Bedknife, Hi-cut Fairway 7.6 mm	See Parts
		Cutting Units:	
	BM24130	(1) QA5 Eleven Blade 22 In. Cutting Unit w/Adjustable 2.0 mm Bedknife, Less Front and Rear Roller & Motor	2,379.69
	BM24129	(1) QA5 Seven Blade 22 In. Heavy Section Blade Cutting Unit With Adjustable 4.8 mm Bedknife, Less Yokes, Front and Rear Roller & Motor	2,291.94

8500 E-Cut Hybrid Fairway Mower -Diesel

Continued

CODE	ATTACHMENT IDENTIFIER	DESCRIPTION	SUGGESTED LIST PRICE USD ($)
		ATTACHMENTS FOR FIELD CONVERSION Continued...	
	BM22458	(1) QA5 Seven Blade 22 In. Heavy Section Blade Cutting Unit With Adjustable Bedknife, Less Yokes, Front Roller & Motor	See Parts
	BM22479	(1) Quick Adjust 5 (QA5) Eleven Blade 18 In. Cutting Units with Yokes, less Front Rollers, Motors and Counter Weight *Includes Rear Roller*	2,556.23
		Engine:	
	TCA19917	B20 Biodiesel Conversion Kit *This kit converts one machine to use B20 Diesel fuel.*	See Parts
		European CE Kit:	
	TCB11727	Compliance Kit *This kit must be ordered to meet the EU country of France shielding regulations.*	105.93
		Miscellaneous:	
	BM22671	(1) 22 In. Fairway Tender Conditioners (FTC) Shaft and Blades *Requires GTC/FTC Gear Drive (BM22469).*	497.56
	BM22761	(1) 22 In. Front Rotary Turf Brush	209.71
	BM22668	(1) 22 In. Rear Roller Power Brush *Requires Rear Roller Power Brush Drive (BM22527).*	141.24
	BM22995	(1) 22 In. Smooth Roller Scraper	16.06
	BM22469	(1) GTC/FTC Gear Drive	1,280.79
	BM23910	(1) QA5 Grass Catcher Lip Extension *This kit extends the front lip of the grass catcher closer to the reel.*	9.63
	BM22527	(1) Rear Roller Power Brush Drive *Requires 22 In. Rear Roller Power Brush (BM22668).*	386.27
	TCA19547	2"x 22" Machine Grooved Roller Scraper	See Parts
	BM23002	3"X22" GROOVE ROLLER SCRAPER *Not compatible with Fairway Tender Conditioners (FTC).* *Can be used on QA5 Cutting units by ordering (1) TCA19597 for each scraper from parts. Requires 3 for 2500's and 5 for Fairway mowers.*	146.59
	BTC10259	4WD Conversion Kit	4,629.89
	TCB11460	Electronic Cruise Control Kit	256.80
	BTC10217	Front High Capacity Catcher with large paddle clip (3 needed for front location on Fairway Mowers)	180.83
	BM22757	Grass Catcher Mounting Kit (set of 5) 1 needed per machine	108.07
	BTC10216	Grass Catcher with large paddle clip (22 Low Profile)	175.49
	TCU13823	Height of Cut Guage Bar	See Parts
	TCB11128	Hydraulic Down Pressure Kit	943.74

8500 E-Cut Hybrid Fairway Mower -Diesel

Continued

CODE	ATTACHMENT IDENTIFIER	DESCRIPTION	SUGGESTED LIST PRICE USD ($)
		ATTACHMENTS FOR FIELD CONVERSION Continued...	
	TCU23674	John Deere Golf Operator Videos and All Products Safety Video DVD Set	See Parts
	BM24199	QA5 Grass Catcher Side Plate Insert *2 Needed for complete machine 2500's.* *1 Needed for front center location for 7500/8500 Fairway Mowers.* *1 Needed for 180 & 220 E-Cut Hybrid Walk Greens Mowers.* *3 Needed for front 8000 E-Cut Hybrid Fairway Mower.*	47.09
	BM23576	QA5 Slope Leveling Kit *1 per cutting unit.*	49.21
	BTC10501	Rear Grass Catcher Bail Kit *Requires 2 for complete machine & rear grass catcher BTC10408.*	182.97
	BTC10194	Wing Latch Kit *Needed to Secure Wing Grass Catchers when in Transport Position.*	282.49
		Reel Cutting Unit Counter Weights	
	BM22762	(1) Cutting Unit ONLY Counter Weight Kit *Needed if NOT installing Rear Roller Power Brush or GTC / FTC Kits.*	62.06
	BM22705	(1) QA5 Cutting Unit Brush Only Counter Weight Kit *Needed if only installing Rear Roller Power Brush on cutting unit.*	139.10
	BM22704	(1) QA5 FTC/GTC ONLY Counter Weight Kit *Needed if ONLY installing FTC/GTC on cutting unit.*	62.06
		Rollers:	
	BM24202	(1) 22 In. 2 In. (5 cm) Diameter Hollow Smooth Roller	166.91
	BM18481	(1) 22 In. 2 In. (5 cm) Diameter Machined Grooved Wide Solid Front Roller	237.54
	BE23416	(1) 22 In. 2 In. (5 cm) Diameter Machined Grooved Solid Front Roller *This Roller is 20mm Shorter Than BM18481.*	222.56
	BM19821	(1) 22 In. 2 In. (5 cm) Diameter Spiral Grooved Front Roller	293.19
	BTC10267	(1) 22 In. 2 In. (5cm) MT Grooved Roller *NOT FOR USE ON GREENS. Roller used to help reduce roller overlaps in fairways. For best results install in front and rear roller location of cutting unit.*	368.09
	BM17668	(1) 22 In. 3 In. (7.6 cm) Diameter Heavy Duty Grooved Disc Front Roller *Not compatible if FTC / GTC installed.* *3 In. Diameter Front Rollers Raise the Minimum Height of Cut.*	335.99
	BM19817	(1) 22 In. 3 In. (7.6 cm) Diameter Spiral Grooved Front Roller With Spiral End Caps *Not compatible if FTC / GTC installed.* *3 In. Diameter Front Rollers Raise the Minimum Height of Cut.*	406.60
	BM23566	(1) 2X22" MT SPIRAL Roller *NOT FOR USE ON GREENS. Roller used to help reduce roller overlaps in fairways. For best results install in front and rear roller location of cutting unit.*	368.09

8500 E-Cut Hybrid Fairway Mower -Diesel
Continued

8700 PrecisionCut Fairway Mower

Equipment for Base Machine

Gross Engine HP 43.1 (32.2 kW)
Net Engine HP 41.7 (31.1 kW @ 2600 rpm
Three Cylinder Turbo Diesel Engine
Servo Controlled Hydrostatic Drive
Two Wheel Drive
Power Steering with Straight Track Steering Cylinder
Dual Disc Brakes
100 In. (2.54 m) Cutting Width
26.5x14-12 Turf Drive Tires
20x10-8 Turf Steer Tires
Deluxe Suspension Seat with Armrests and Retractable Seatbelt
White Box Controller with On-Board Diagnostics
One-Touch Lift/Lower Reel Lever
Electric Over Hydraulic Reel Lift
Rear Cutting Unit Attaching Point
Foot Activated Tilt Steering Column
On-Board Backlapping with Adjustable Reel Speed Control
Five Hydraulic Quick-Tatch Reel Motors
Quick-Tatch Cutting Units
Adjustable Hydraulic Down Pressure
(5) QA7 22 In. (55.9 cm) Cutting Units (Eight Blade)
7 In. (17.8 cm) Diameter Reels with Reel to Bedknife with Notch Adjustments
2 In. Diameter Machined Grooved Solid Front Rollers
2-Post Roll Over Protection Structure
6 LED Warning Light Instrument Cluster with Hour Meter
Removable Rear Cutting Unit Upstops
3 Front Work Lights
Command Arm Operator Controls
18 U.S. Gallon Fuel Capacity

CODE	ATTACHMENT IDENTIFIER	DESCRIPTION	SUGGESTED LIST PRICE USD ($)

Select One Code From Each Required Category

BASE MACHINE

F.O.B. Raleigh, North Carolina

1482TC	8700 PrecisionCut Fairway Mower	61,356.00

REEL CUTTING UNITS

1004	(5) Quick Adjust 7 (QA7) Eight Blade 22 In. Cutting Units with 6.3 mm bedknife Less Front Rollers, Motors and counter weight	In Base Price
1005	(5) Quick Adjust 7 (QA7) Ten Blade 22 In. E.S.P. Cutting Units with 6.3 mm bedknife, Less Front Rollers, Motors and counter weights	260.00
1010	Less Cutting Units	-13,015.00

REEL FRONT ROLLERS

2001	(5) 22 In. 3 In. (7.6 cm) Diameter Heavy Duty Grooved Disc	In Base Price
2002	(5) 22 In. 3 In. (7.6 cm) Diameter Spiral Grooved Front Rollers with Spiral End Caps	330.00
2010	Less Front Rollers, Roller Adjusters and Skid Shoes	-1,570.00

TRACTION DRIVE UNIT

3000	2WD Traction Unit	In Base Price
3001	Factory Installed 4WD Traction Unit	4,411.00

REEL CUTTING UNIT COUNTER WEIGHTS

4001	(5) QA7 Cutting Unit ONLY Counter Weight Kit *Needed if NOT installing Rear Roller Power Brush*	In Base Price

8700 PrecisionCut Fairway Mower
Continued

CODE	ATTACHMENT IDENTIFIER	DESCRIPTION	SUGGESTED LIST PRICE USD ($)
		REEL CUTTING UNIT COUNTER WEIGHTS Continued... *or GTC/FTC Kits.*	
4002		(5) QA7 Reel Cutting Unit Brush Only Counter Weight Kit *Needed if only installing Rear Roller Power Brush on Cutting Unit.*	360.00
4003		(5) QA7 Cutting Unit FTC/GTC ONLY Counter Weight Kit *Needed if ONLY installing FTC/GTC on cutting unit.*	Same Price
4010		Less Counter Weight kit *Ordered if Both Rear Roller Power Brush and FTC/GTC Kit installed.*	-290.00
		ATTACHMENTS - ORDER AS DESIRED	
		CE Kit:	
9330		Battery Label Kit *This kit must be ordered to meet battery labeling requirement in Brazil.*	No Charge
		Cutting Units:	
9010		(5) QA7 Vertical Cutting Units with Front Rollers Less Motors	9,020.00
		European CE Kit	
9100		European CE Conversion Kit, 7700 PrecisionCut Fairway Mower *Must be Ordered to Receive a PrecisionCut Fairway Mower Which Meets CE Requirements. Kit Includes Electric Hood Switch, Pictorial Decals and Operator's Manuals in English, French, German, Spanish and Italian.*	35.00
9102		European CE Reel Decal Kit for E.S.P. Cutting Units *Must be Ordered to Receive Decals that Converts (5) E.S.P. Cutting Units to Meet CE Mark Requirements.*	No Charge
9350		Compliance Kit *This kit must be ordered to meet the EU country of France shielding regulations.*	99.00
		Miscellaneous:	
9000		(5) Grass Catchers with large paddle clip Mounting Hardware for QA7 Cutting Units and Wing Latch	1,232.00
9015		(5) QA7 22" Fairway Tender Conditioners Shaft and Blades *Requires order code 9016.*	2,485.00
9016		(5) QA7 FTC Gear Drive *Requires order code 9015.*	5,985.00
9017		(5) QA7 22" Rear Roller Power Brushes *Requires order code 9018.*	660.00
9018		(5) QA7 Rear Roller Power Brush Drive *Requires order code 9017.*	1,805.00
9021		4WD Conversion Kit *Converts 2WD Traction Unit into 4WD Traction Unit.*	4,327.00
9022		(5) 22 In. 3 In. Diameter Heavy Duty Grooved Disc Roller Scrapers	685.00

8700 PrecisionCut Fairway Mower
Continued

CODE	ATTACHMENT IDENTIFIER	DESCRIPTION	SUGGESTED LIST PRICE USD ($)
		ATTACHMENTS - ORDER AS DESIRED Continued...	
9025		(5) 22 In. Smooth Roller Scrapers *Requires (5) TCA19587 from parts.*	198.00
9400		Canopy	425.00
9806		(5) 10 Blade QA7 cutting units less front roller	13,275.00
9807		(5) 8 Blade QA7 cutting units less front roller	13,015.00
		ATTACHMENTS FOR FIELD CONVERSION	
		Bedknives	
	ET17751	Bedknife, Hi-cut Fairway 12 mm	See Parts
	MT3883	Bedknife, Ultra Lo-cut Fairway 6.3 mm	See Parts
		CE Kit:	
	BTC10256	Battery Label Kit *This kit must be ordered to meet battery labeling requirement in Brazil.*	0.00
		Cutting Units:	
	BM22461	(1) QA7 Vertical Cutting Units with Front Rollers Less Motors	1,930.29
	BM22463	(1) Quick Adjust 7 (QA7) Eight Blade 22 In. Cutting Units Less Front Rollers and Motors	2,785.21
	BM24121	(1) Quick Adjust 7 (QA7) Eight Blade 22 In. Cutting Units with 6.3 mm bedknife Less Front Rollers, Motors and counter weight	2,785.21
	BM22464	(1) Quick Adjust 7 (QA7) Ten Blade 22 In. E.S.P. Cutting Units Less Front Rollers and Motors	2,840.86
	BM24122	(1) Quick Adjust 7 (QA7) Ten Blade 22 In. E.S.P. Cutting Units with 6.3 mm bedknife, Less Front Rollers, Motors and counter weights	2,840.86
		Engine:	
	TCA19917	B20 Biodiesel Conversion Kit *This kit converts one machine to use B20 Diesel fuel.*	See Parts
		European CE Kit:	
	TCB11727	Compliance Kit *This kit must be ordered to meet the EU country of France shielding regulations.*	105.93
		Miscellaneous:	
	BM22763	(1) Conversion Mounting Kit old Machine to New QA7 Cutting Units *Contains Parts to Convert (1) Cutting Unit.*	70.61
	BM22693	(1) QA7 22" Fairway Tender Conditioners Shaft and Blades *Also need order code 9016 (BM22673).*	531.79
	BM22712	(1) QA7 22" Rear Roller Power Brush *Also need order code 9018 (BM22674).*	141.24
	BM22674	(1) QA7 26 In. Rear Roller Power Brush Drive	386.27

8700 PrecisionCut Fairway Mower
Continued

CODE	ATTACHMENT IDENTIFIER	DESCRIPTION	SUGGESTED LIST PRICE USD ($)
		ATTACHMENTS FOR FIELD CONVERSION Continued...	
	BM22673	(1) QA7 FTC Gear Drive *Also need order code 9015 (BM22693).*	1,280.79
	BM17684	(5) 22 In. Smooth Roller Scrapers *Requires (5) TCA19587 from parts.*	211.86
	BM22764	1) Conversion Mounting Kit 2009 Machine to Old Cutting ESP Cutting units *Contains Parts to Convert (1) Cutting Unit.*	70.61
	BM23002	3"X22" GROOVE ROLLER SCRAPER *Not compatible with Fairway Tender Conditioners (FTC).* *Can be used on QA5 Cutting units by ordering (1) TCA19597* *for each scraper from parts. Requires 3 for 2500's* *and 5 for Fairway mowers.*	146.59
	BTC10259	4WD Conversion Kit	4,629.89
	AMT663	Bar Gauge Kit	See Parts
	MT1928	Bedknife, Low-Cut Fairway	See Parts
	TCB11126	Canopy	454.76
	TCB11460	Electronic Cruise Control Kit	256.80
	BTC10217	Front High Capacity Catcher with large paddle clip (3 needed for front location on Fairway Mowers)	180.83
	TCB11414	Front Wing Latch Kit (Set of 2) 1 per machine *Needed to Secure Wing Grass Catchers when in Transport Position.*	220.41
	BM22756	Grass Catcher Mounting Kit (set of 5) 1 needed per machine	204.37
	BTC10216	Grass Catcher with large paddle clip (22 Low Profile) *2 needed for complete machine for 2500#s.* *2 needed for rear locations for Fairway Mowers 7700/8700.* *1 needed for 180 & 220 E-Cut Hybrid Walk Greens Mower.*	175.49
	TCU13823	Height of Cut Guage Bar	See Parts
	TCU23674	John Deere Golf Operator Videos and All Products Safety Video DVD Set	See Parts
		Reel Cutting Unit Counter Weights	
	BM22762	(1) Cutting Unit ONLY Counter Weight Kit *Needed if NOT installing Rear Roller Power Brush* *or GTC / FTC Kits.*	62.06
	BM22704	(1) QA5 FTC/GTC ONLY Counter Weight Kit *Needed if ONLY installing FTC/GTC on cutting unit.*	62.06
	BM22721	(1) QA7 Cutting Unit Brush Only Counter Weight Kit *Needed if only installing Rear Roller Power Brush on 26" Cutting Unit.*	139.10
		Rollers:	
	BM17668	(1) 22 In. 3 In. (7.6 cm) Diameter Heavy Duty Grooved Disc Front Roller	335.99

8700 PrecisionCut Fairway Mower
Continued

CODE	ATTACHMENT IDENTIFIER	DESCRIPTION	SUGGESTED LIST PRICE USD ($)
		ATTACHMENTS FOR FIELD CONVERSION Continued...	
	BM19817	(1) 22 In. 3 In. (7.6 cm) Diameter Spiral Grooved Front Roller With Spiral End Caps	406.60

7400 TerrainCut Trim and Surrounds Mower

Equipment for Base Machine

*Engine HP is Provided by the Engine Manufacturer to be Used for Comparison Purposes Only. Actual Operating HP will be Less. Refer to the engine manufacturer#s web site for additional information.
Gross Engine HP 37.1 (27.67 kW) Net Engine HP 36 (26.85 kW) @ 2600 RPM
Three Cylinder Turbo Diesel Engine
Hydrostatic Drive
(3) Independent Wheel Motors
GRIP All Wheel Drive
Width On Demand 74 In. (188cm) or 68 In. (173cm) Mowing Width
Reach Trimming System with Maximum 15 In. (38cm) Shift Outside Front Tire
Power Steering with Straight Track Steering Cylinder
Dual Disc Brakes
(2) 24x12-12 Turf Trac Front Drive Tires
(1) 24x12-12 Multi Trac Rear Drive Tire
Deluxe Suspension Seat with Retractable Seatbelt
White Box Controller with On-Board Diagnostics
One-Touch Lift/Lower Deck Lever
Electric Over Hydraulic Deck Lift
Foot Activated Tilt Steering Column
(3) Rotary Deck Hydraulic Motors
(3) 27 In. (69cm) Floating Rotary Rear Discharge Decks
10 Gauge Steel Decks with Top Mounted Frame and Front Deck Bumper
(1) 27 In., 3 In. Diameter Rear Roller per Deck
(2) Front Greasable Caster Wheels Per Deck
2-Post Roll Over Protection Structure
6 LED Warning Light Instrument Cluster with Hour Meter
Command Arm Operator Controls
13 U.S. Gallon Fuel Capacity
John Deere Golf Operator Videos and All Products Safety Video DVD Set

CODE	ATTACHMENT IDENTIFIER	DESCRIPTION	SUGGESTED LIST PRICE USD ($)

Select One Code From Each Required Category

BASE MACHINE

F.O.B. Raleigh, North Carolina

1713TC	7400 TerrainCut Trim and Surrounds Mower	41,753.00

ATTACHMENTS - ORDER AS DESIRED

European CE Kit:

9100	European CE Conversion Kit 7400 TerrainCut Trim and Surrounds Mower *Must be Ordered to Receive a TerrainCut Trim and Surrounds Mower Which Meets CE Requirements. Kit Includes Electric Hood Switch, Guard, Pictorial Decals and Operator's Manuals in English, French, German, Spanish and Italian.*	151.00
9350	Compliance Kit *This kit must be ordered to meet the EU country of France shielding regulations.*	99.00
9330	Battery Label Kit *This kit must be ordered to meet battery labeling requirement in Brazil.*	No Charge

Miscellaneous:

9001	(3) 27 In. Mulch Kits *Includes Deflectors and Baffles.*	393.00
9002	Light Kit	216.00
9004	Joystick Kit	974.00
9023	(3) 27 In. Rear Roller Scraper Kits	222.00

ATTACHMENTS FOR FIELD CONVERSION

7400 TerrainCut Trim and Surrounds Mower
Continued

CODE	ATTACHMENT IDENTIFIER	DESCRIPTION	SUGGESTED LIST PRICE USD ($)
		ATTACHMENTS FOR FIELD CONVERSION Continued...	
		CE Kit:	
	BTC10256	Battery Label Kit *This kit must be ordered to meet battery labeling requirement in Brazil.*	0.00
		Miscellaneous:	
	TCB11575	(1) 27 In. Mulch Kit *Does Not Include TCU27876 Mulch Blade, See Parts.* *(3) TCB11575 Must be ordered for complete machine.*	140.17
	TCB11255	(1) 27 In. Rear Roller Scraper Kit	79.19
	TCB11728	Compliance Kit *This kit must be ordered to meet the EU country of France shielding regulations.*	105.93
	TCB11296	Joystick Kit	1,042.19
	TCB11462	Light Kit	231.11
	TCU25388	UltraTrac Fairway Mower Tire	See Parts

8800 TerrainCut Rough Mower

Equipment for Base Machine

*Engine HP is Provided by the Engine Manufacturer to be Used for Comparison Purposes Only. Actual Operating HP will be Less. Refer to the engine manufacturer#s web site for additional information.
Gross Engine HP 43.1 (32.2 kW)
Net Engine HP 42 (31.1 kW) @ 2600 rpm
Three Cylinder Turbo Diesel Engine
Servo Controlled Hydrostatic Drive
Grip AWD
Power Steering with Straight Track Steering Cylinder
Dual Disc Brakes
88 In. (226cm) Cutting Width
26.5x14-12 Turf Drive Tires
20x10-8 Turf Steer Tires
Deluxe Suspension Seat with Armrests and Retractable Seatbelt
White Box Controller with On-Board Diagnostics
One-Touch Lift/Lower Deck Lever
Electric Over Hydraulic Deck Lift
Foot Activated Tilt Steering Column
(5) Rotary Deck Hydraulic Motors
(5) 21 In. (53.3cm) Floating Rotary Rear Discharge Decks (10 Gauge Stamped Steel Decks)
(1) 21 In., 3 In. Diameter Rear Roller Per Deck
(2) 5 In., 4 In. Diameter Front Rollers Per Deck
2-Post Roll Over Protection Structure
6 LED Warning Light Instrument Cluster with Hour Meter
3 Front Work Lights
Command Arm Operator Controls
18 U.S. Gallon Fuel Capacity

CODE	ATTACHMENT IDENTIFIER	DESCRIPTION	SUGGESTED LIST PRICE USD ($)

Select One Code From Each Required Category

BASE MACHINE

F.O.B. Raleigh, North Carolina

1492TC		8800 TerrainCut Rough Mower	59,697.00

ATTACHMENTS - ORDER AS DESIRED

		European CE Kit:	
9100		European CE Conversion Kit 8800 TerrainCut Rough Mower *Must be Ordered to Receive a TerrainCut Rough Mower Which Meets CE Requirements. Kit Includes Electric Hood Switch, Pictorial Decals and Operator's Manuals in English, French, German, Spanish and Italian.*	34.00
9330		Battery Label Kit *This kit must be ordered to meet battery labeling requirement in Brazil.*	No Charge
9350		Compliance Kit *This kit must be ordered to meet the EU country of France shielding regulations.*	99.00
		Miscellaneous:	
9400		Canopy	425.00

ATTACHMENTS FOR FIELD CONVERSION

		CE Kit:	
	BTC10256	Battery Label Kit *This kit must be ordered to meet battery labeling requirement in Brazil.*	0.00
		Engine:	
	TCA19917	B20 Biodiesel Conversion Kit *This kit converts one machine to use B20 Diesel fuel.*	See Parts
		European CE Kit:	

8800 TerrainCut Rough Mower
Continued

CODE	ATTACHMENT IDENTIFIER	DESCRIPTION	SUGGESTED LIST PRICE USD ($)
		ATTACHMENTS FOR FIELD CONVERSION Continued...	
	TCB11727	Compliance Kit *This kit must be ordered to meet the EU country of France shielding regulations.*	105.93
		Miscellaneous:	
	TCB11463	(5) 22 In. Smooth Roller Scrapers *1 kit needed per machine.*	104.86
	TCA19481	21" Deck Less Motor and Motor Base *See DTAC solution for additional required parts for installation.*	See Parts
	TCB11126	Canopy	454.76
	TCB11460	Electronic Cruise Control Kit	256.80
	GC00175	High Lift blade - standard with deck shipped from factory	See Parts
	TCU23674	John Deere Golf Operator Videos and All Products Safety Video DVD Set	See Parts
	GK22190	Low Lift Blade	See Parts
	GC0034	Mulch Blade	See Parts
	TCB11461	Mulching Kit (1) *Does Not Include GC00344 Mulch Blade, See Parts.* *(5) TCB11461 Must be ordered for complete machine.*	73.83

Current Attachments for Non-Current Special Application Mowers

CODE	ATTACHMENT IDENTIFIER	DESCRIPTION	SUGGESTED LIST PRICE USD ($)
		ATTACHMENTS FOR FIELD CONVERSION	
		3245C Independent Deck Mower Attachments:	
	TCB11166	(1) 22 In. Smooth Roller Scraper *(5) TCB11166 Kits Must be Ordered for a Complete Machine.*	79.19
	TCB10898	European CE 3245C Independent Deck Mower Service and Training Kit *Contains PAL Operator Training Video and Parts Catalog.*	See Parts
	TCB10897	Independent Deck Mower Service and Training Kit *Contains Operator Training Video and Parts Catalog.*	See Parts

Gator TX Turf

Equipment for Base Machine

ENGINE:
13 Engine HP (401cc),
Single Cylinder, Air-cooled,
4-Cycle Gasoline
Overhead Valves
Full Pressure Lubrication
System
Replaceable Single Element
(Dry Type) Air Cleaner
with Remote Intake
5.2 Gallon (19.7 L) Fuel
Capacity
Solid State 12V Ignition
ELECTRICAL:
Electric Start
6 Amp, Regulated Alternator
340 CCA Battery
Two 37.5 Watt Halogen
Headlights
TRANSAXLE/TRANSMISSION:
Continuously Variable
Transmission (CVT)
Single-speed Transaxle
20 mph (32.2 kph) Maximum
Forward Speed
Rear Traction Assist
Front and Rear Hydraulic
Disk Brakes
Rear Mechanical Disk Hand
Operated Park Brake
Two Rear Drive Wheels
1-5/16 In. (33.5mm)
Forged Rear Axle
STEERING/SUSPENSION:
Rack and Pinion Steering
Front Suspension
Independent Spring-Over-Shock
Single A-Arm Design
Rear Suspension
Triple Rate Adjustable
Coil-Over-Shock
1 In. (25mm) Front Spindles
FRAME/STYLED PARTS:
Arc Welded Uni-Body Frame
Thermoplastic Elastomer
Polyolefin (TPO) Hood
and Fenders
OPERATOR STATION:
High-Back Bucket Seats
Walk-Through Platform
Park Brake Indicator Light
Hip Restraint Bars
(Driver and Passenger)
Passenger Grab Handle
Glove Box
Two Cup Holders
Fuel Gauge
Hour Meter
12V DC Outlet
DIMENSIONS:
109.6 In. Long x 60 In.
Wide x 47.6 In. High
(2788 mm x 1524 mm x
1209 mm)
1000 Lbs. (454 kg.) Total
Payload Capacity Which
Includes:
200 Lbs. (91 kg) Driver,
200 Lbs. (91 kg) Passenger
and 600 Lbs (272 kg) in
Cargo Box
Towing Capacity: 1000 Lbs.
(454 kg)
12.00 ft. Turning Radius
Ground Clearance (Under
Transaxle): 5.7 In. (145 mm)
Ground Clearance (Under Foot
Platform): 10.6 In. (270 mm)
CARGO BOX:
45 In. Long x 52 In. Wide
x 12 In. Deep (1143 mm x
1320 mm x 304.8 mm)
16.4 Cu.Ft (.46 m) Capacity
600 Lbs. (272 kg) Box
Capacity
Tilting Box
Hinged (Bottom) Tailgate,
Removable
Load Guard
Removeable Cargo Box Side
Panels (Flat Bed)
Hold Down Latch and Prop Rod
TIRES:
Front: 2-22x9.50-10 4 Ply
Cayman Turf
Rear: 2-24x12.00-10 4 Ply
Cayman Turf
Miscellaneous:
Rear Receiver Hitch
SAFETY VIDEO TAPE:
Safety & Operational Video
*Engine HP is Provided by the
Engine Manufacturer to be Used
for Comparison Purposes Only,
Actual Operating HP will be
Less.

CODE	ATTACHMENT IDENTIFIER	DESCRIPTION	SUGGESTED LIST PRICE USD ($)

Select One Code From Each Required Category

BASE MACHINE

F.O.B. Janesville, Wisconsin

563EM	Gator TX Turf *Base Machine Suggested List Price Does Not Include $300 USD Destination Charge.*	8,699.00

DESTINATION

0202	US/Canada	In Base Price
0230	Australia/New Zealand	Same Price
0195	Mexico	Same Price

WHEELS WITH TIRES (FOUR)

1001	Cayman Turf Tires	In Base Price

Gator TX Turf

Continued

CODE	ATTACHMENT IDENTIFIER	DESCRIPTION	SUGGESTED LIST PRICE USD ($)
		WHEELS WITH TIRES (FOUR) Continued...	
		DRIVER SEAT	
2000		Non Adjustable Seat	In Base Price
2001		Adjustable Seat	83.00
		DELUXE CARGO BOX	
3000		Deluxe Cargo Box with Paint & Reflectors	In Base Price
3002		Deluxe Cargo Box with Reflectors & Spray-On Liner	264.00
3003		Deluxe Cargo Box with Brake & Tail Light, Spray-On Liner & Tail Light Protector	496.00
		CARGO BOX POWER LIFT	
4000		Cargo Box Power Lift	720.00
4010		Less Power Lift *Latch and Prop Rod Included.*	In Base Price
		FRONT PROTECTION PACKAGE	
5000		Front Protection Package Package Consists of: Front Bumper / Brush Guard, Front Fender Guard and Rubber Floormats. *Package Priced at 10% Discount.*	504.00
5010		Less Front Protection Package	In Base Price
		REAR PROTECTION PACKAGE	
5100		Rear Protection Package Package Consists of: Rear Bumper, Bedmat Kit, Cargo Box FenderGuard. *Package Priced at 10% Discount.*	494.00
5110		Less Rear Protection Package	In Base Price
		ATTACHMENTS FOR FIELD CONVERSION	
		Cabs/Roofs/Windshields:	
	BM22600	Deluxe Glass Cab *Includes Front Windshield (Excluding Wiper), Glass Doors and Glass Rear Window.* *Remote Cargo Box Release Kit is required if vehicle is not equipped with Cargo Box Power Lift.* *Heavy Duty Front Suspension Kit is recommended with Cab installation.*	4,086.33
	BM22138	Electrical Kit *Kit Includes Wiring Harness, Overhead Console and Roof Headliner.*	219.36

Gator TX Turf
Continued

CODE	ATTACHMENT IDENTIFIER	DESCRIPTION	SUGGESTED LIST PRICE USD ($)
		ATTACHMENTS FOR FIELD CONVERSION Continued...	
	BM21645	Exterior Mirrors (2) Kit *Requires Deluxe Glass Cab.*	173.34
	BM23578	Forced-Air Heater Kit	2,269.47
	BM21656	Interior Light Kit - Deluxe Cab *Requires Electrical Kit.*	58.86
	BM21646	Visor (1) Kit - Deluxe cab	70.61
	BM21466	Windscreen	280.34
	BM21648	Windshield Washer Kit *Requires Electrical Kit.*	177.61
	BM21462	Windshield Wiper Kit *Requires Electrical Kit.*	303.89
		Cargo Box Options / Storage:	
	BM22772	Cargo Box Bed Mat	119.84
	BM22769	Cargo Box Divider	191.53
	BM22811	Cargo Box FenderGuard *Requires Heavy Duty Rear Bumper*	191.53
	BM23734	Cargo Box Power Lift	770.40
	BM22774	Cargo Box Side Extension Kit	511.46
	LP19880	Deluxe Cargo Box Cover - Black *Available through Order Zone*	In Catalog
	BM23456	Front Hood Rack *Requires Front Bumper / Brush Guard for mounting. Not compatible with Mauser Cab.*	241.81
	LP30320	Fuel Pack *Available through Order Zone*	In Catalog
	LP19878	Gator Gear Organizer - Black *Available through Order Zone*	In Catalog
	LP19886	Gator Tool Box *Contact Dealer for pricing.*	In Catalog
	LP25929	Rhino Grip XL - Double	In Catalog
	LP25928	Rhino Grip XL - Single	In Catalog
	LP19882	Saw Press Bracket *Available through Order Zone*	In Catalog
	BM22776	Side Storage Box	215.07
	BM22775	Side Tool Rack	304.96

Gator TX Turf

Continued

CODE	ATTACHMENT IDENTIFIER	DESCRIPTION	SUGGESTED LIST PRICE USD ($)
		ATTACHMENTS FOR FIELD CONVERSION Continued...	
		Carts / Hitches:	
	LPPCT10LXATV	10AT Cart *Available through Order Zone*	In Catalog
	LPPCT17ATJD	17AT Cart *Available through Order Zone.*	In Catalog
	LPUT21JD	21 Steel Utility Cart *Available through Order Zone*	In Catalog
	PM05101	Ball Mount - 1.875 in. (48mm)	See Parts
	PM05201	Ball Mount - 2 in. (51mm)	See Parts
	BM23989	Drawbar, 1.25 In. (38mm)	35.31
	BM17801	Rear Hitch	44.94
	BM23839	Rear Receiver Hitch, 1.25 in. (38mm) *No drawbar nor ball is included with the hitch.*	79.19
		Custom & High Performance:	
	BM20414	Heavy-Duty Suspension Kit *Recommended when using a deluxe cab or front mounted blades. Heavy-Duty Suspension is standard on Gator TE.*	165.86
	BM22543	Rough Terrain Kit *Throttle stabilizer.*	97.37
		Engine:	
	BM22889	Fly Wheel Cover	63.13
	AM108146	Spark Arrester Screen for Muffler	See Parts
		Hunting / Camo:	
	LP19884	Cargo Box Gun Mount - Black *Double gun boot mount. Includes (2) Gun Boot 6.0 Transports*	In Catalog
	LP19879	Deluxe Cargo Box Cover- Camo	In Catalog
	LP19877	Gator Gear Organizer (Camo)	In Catalog
	LP93103	Vehicle Cover, Cab / ROPS - Camo	In Catalog
		Lights / Signals:	
	BM23013	Backup Alarm Kit	101.66
	BM22405	Beacon Light	381.99
	BM21649	Beacon Light Kit - Deluxe Cab	371.29
	BM22685	Deluxe Light Kit *Kit includes backup lights, four-way flashers, turn signals, brake lights, taillights, front position lights.*	395.90
	BM21651	Front Light Kit - Deluxe Cab *Requires Electrical Kit.*	293.19

Gator TX Turf
Continued

CODE	ATTACHMENT IDENTIFIER	DESCRIPTION	SUGGESTED LIST PRICE USD ($)
		ATTACHMENTS FOR FIELD CONVERSION Continued...	
	BM23193	Horn Kit	97.37
	BM21652	Rear Light Kit - Deluxe Cab *Requires Electrical Kit.*	217.21
		Protection:	
	BM25000	Floor Mat	78.11
	BM23458	Front Bumper *Includes Front Receiver Hitch.*	191.53
	BM23459	Front Bumper/Brush Guard *Includes front receiver hitch.*	339.19
	BM23457	Front Fender Guard *Requires Front Bumper or Front Bumper/Brushguard*	142.31
	LP93547	Gator Cover *Not compatible with Deluxe Cab.* *Available through Order Zone.*	In Catalog
	BM22767	Heavy Duty Rear Bumper	236.47
	LP92634	Large Deluxe Seat Cover - Yellow *Available through Order Zone.*	In Catalog
	LP92334	Large Seat Cover - Yellow *Available through Order Zone.*	In Catalog
	LP92333	Seat Cover - Camo *Available through Order Zone.*	In Catalog
	BM22773	Tail Light Protectors	89.89
	LP93107	Vehicle Cover, Cab / ROPS - Black *Fits all Models Equipped with OPS and Deluxe Cab Structure.*	In Catalog
		Seats / Wheels / Tires:	
	BM23799	Parts For Adjustable Driver's Seat	88.81
		Spanish North American Kit:	
	M153216	Spanish Operator's Manual	See Parts
		Sprayers / Pressure Washers:	
	LP33597	25 Gallon Bed Sprayer	In Catalog
	LP20852	45 Gallon Bed Sprayer	In Catalog
	LP22908	45 Gallon High Performance Sprayer	In Catalog
	LP20485	45 Gallon Tow-Behind Sprayer	In Catalog
	LPGP2700GH	GatorPal High Pressure Washer (2700 psi, Honda engine) *Contact Dealer for pricing.*	In Catalog
	LPGP2700GS	GatorPal High Pressure Washer (2700 psi, Subaru engine) *Contact Dealer for pricing.*	In Catalog

Gator TX Turf
Continued

CODE	ATTACHMENT IDENTIFIER	DESCRIPTION	SUGGESTED LIST PRICE USD ($)
		ATTACHMENTS FOR FIELD CONVERSION Continued...	
	LP22885	HP 150 in. Precision Boom *Compatible with all High Performance Sprayers* *Available through Order Zone*	In Catalog
	LP39963	HP 45 Gallon Sprayer - Tow Behind	In Catalog
	LP22884	HP Boomless Nozzles	In Catalog
	LP22911	HP Standard Gator Boom	In Catalog
		Winch:	
	BM24442	Warn® Winch (3000 Lb.) *Requires Front Bumper or Front Bumper/Brush Guard for Front Mount.* *Requires Rear Receiver Hitch for Rear Mount.* *Requires Rear Multi-Mount Harness (AM137110) for Rear Mount.* *VGA10459 (battery wiring harness) required for 6X4 vehicles (TH Gas, TH Diesel, M-Gator A1).*	879.54
	BM21392	Winch Accessories Kit	129.47

1200A Bunker and Field Rake

Equipment for Base Machine

11.0 HP (8.2 kW) at 3600 rpm
Enginer Manufacturer Gross Power
Tested in Accordance with SAE
J1995
351 cc
The engine hp and torque
information
are provided by the engine
manufacturer to be used
for comparison purposes only.
Actual operating hp and torque
will be less.
Refer to engine manufacturer's
website for additional
information.
Air-cooled, 4-Cycle Gas Engine
Full Pressure Lubrication
Oil Filter

Electric Start
Heavy Duty Air Cleaner
Enclosed Transaxle
Differential Lock
Variable Drive
Rear Hitch
Foot Throttle Control
Parking Brake
Automotive Steering Wheel
Rear Utility Storage Basket
(1) Front Tire,
22.5X10-8 In.
2 PR Hi-Flotation
(2) Rear Tires,
25X12.00-9 In.
2 PR Hi-Flotation
High Back Seat
3.6 Gallon (13.6 L) Fuel

Capacity
72 In. Rear Mounted
Prong-Blade Rake
Heavy-Duty Rear Electric
Actuated Lift
2 Pedal Forward/Reverse
Foot Control
Meets CARB Standards

CODE	ATTACHMENT IDENTIFIER	DESCRIPTION	SUGGESTED LIST PRICE USD ($)
		Select One Code From Each Required Category	
		BASE MACHINE	
		F.O.B. Davenport, Iowa	
4309M		1200A Bunker and Field Rake	13,213.00
		DESTINATION	
0202		US/Canada	In Base Price
0230		Australia/New Zealand	Same Price
0179		Europe	62.00
0195		Mexico	Same Price
0250		All Other Countries	Same Price
		RAKE ATTACHMENT FRAME	
1001		Rear Frame	In Base Price
1010		Less Rear Frame	-202.00
		REAR MOUNTED ATTACHMENTS	
2000		Bunker Rake (Serrated Blades) *Requires Rear Frame.*	In Base Price
2001		Field Rake (Smooth Blades) *Requires Rear Frame.*	21.00
2002		Rear Mounted 60 In. Field Finisher *Requires Rear Frame.*	-16.00
2003		Spiker	2,877.00

1200A Bunker and Field Rake

Continued

CODE	ATTACHMENT IDENTIFIER	DESCRIPTION	SUGGESTED LIST PRICE USD ($)
		REAR MOUNTED ATTACHMENTS Continued...	
		Requires Less Rear Frame. Region II (Europe) Requires European CE Conversion Kit (Code 9102).	
2010		Less Bunker Rake Attachment	-433.00
		WHEELS WITH TIRES (THREE)	
3000		(3) Knobby Hi-Flotation Tires and Wheels	In Base Price
3001		(3) Sports Turf Tires and Wheels	Same Price
3010		Less Tires and Wheels	-522.00
		ATTACHMENTS - ORDER AS DESIRED	
		CE Kit:	
9330		Battery Label Kit *This kit must be ordered to meet battery labeling requirement in Brazil.*	No Charge
		European CE Kit:	
9102		European CE Conversion Kit, Spiker *Must be Ordered to Receive a Spiker Which Meets CE Requirements. Kit Includes Pictorial Decals and Operator's Manuals in English, French, German, Spanish and Italian.*	No Charge
		Miscellaneous:	
9010		Mid-Mount Cultivator Shoes/Blades *Requires BM18536 Mid-Mount Base.*	199.00
9011		Mid-Mount Base	479.00
9012		Wide Scarifier (Interval) Tines *Requires BM18536, Mid-Mount Base.*	410.00
9013		Narrow Scarifier (Interval) Tines *Requires BM18536, Mid-Mount Base.*	579.00
9020		40 In. Front Blade	567.00
9030		60 In. Front Aluminum Blade *Requires BM18537, Front Blade.*	226.00
9040		Mid-Mount 64.5 In. Scraper Blade *Requires BM18536, Mid-Mount Base. Also Requires BM18252 or BM18253, Tines.*	180.00
		ATTACHMENTS FOR FIELD CONVERSION	
		CE Kit:	
	BTC10256	Battery Label Kit *This kit must be ordered to meet battery labeling requirement in Brazil.*	0.00
		Miscellaneous:	
	BM18537	40 In. Front Blade	606.69
	BE23419	60 In. Front Aluminum Blade *Requires BM18537, Front Blade.*	241.81

1200A Bunker and Field Rake
Continued

CODE	ATTACHMENT IDENTIFIER	DESCRIPTION	SUGGESTED LIST PRICE USD ($)
		ATTACHMENTS FOR FIELD CONVERSION Continued...	
	BM18248	Bunker Rake (Serrated Blades)	463.31
	TCU17594	Bunker Rake Blade	See Parts
	AET10262	Cultivator Blade	See Parts
	BM18249	Field Rake (Smooth Blades)	485.79
	ET15235	Field Rake Blade	See Parts
	TCB11024	Light Kit *Includes Wiring Harness, Two Front and One Rear Light.*	See Parts
	BTC10094	Light Kit *Includes Wiring Harness, two Front and on Rear Light.*	226.84
	BE23421	Mid-Mount 64.5 In. Scraper Blade *Requires BM18536, Mid-Mount Base. Also Requires BM18252 or BM18253, Tines.*	192.60
	BM18536	Mid-Mount Base	512.53
	BM18251	Mid-Mount Cultivator Shoes/Blades *Requires BM18536 Mid-Mount Base.*	212.93
	BM18253	Narrow Scarifier (Interval) Tines *Requires BM18536, Mid-Mount Base.*	619.53
	BM18247	Rear Frame	216.14
	BE23422	Rear Mounted 60 In. Field Finisher *Requires Rear Frame.*	446.19
	AET10644	Scarifier Tine, Narrow-Interval *Requires BM18536, Mid-Mount Base.*	See Parts
	AET10702	Scarifier Tine, Wide-Interval *Requires BM18536, Mid-Mount Base.*	See Parts
	TCB11583	Spiker	3,541.70
	TCB10865	Tires and Wheels, (3) Knobby Hi-Floatation	558.54
	TCB11659	Tires and Wheels, (3) Sports Turf *(1) 22.5x10-8 Front, (2) 25x12-9 Rear.*	558.54
	BM18252	Wide Scarifier (Interval) Tines *Requires BM18536, Mid-Mount Base.*	438.70

1200 Hydro Rake

Equipment for Base Machine

16 (12 kW) Gross HP Vanguard Air Cooled Gas Two-Cylinder Engine
Full Pressure Lubrication
Oil Filter
Electric Start
Heavy-Duty Air Cleaner
3 Wheel Hydrostatic Drive Powertrain
Variable Drive
Rear Hitch
Hand Throttle Control
Parking Brake
Automotive Steering Wheel
12.9 qt (12.2 L) Hydraulic Capacity
(3) 22x13.00x8 LP Tubeless Tires
High Back Seat
3.4 Gallon (12.9 L)Fuel Capacity
72 In. Rear Mounted Prong-Blade Rake
Hydraulic Lift for Mid and Rear Mount Attachments
2 Pedal Forward/Reverse
Foot Control
Meets CARB Standards

CODE	ATTACHMENT IDENTIFIER	DESCRIPTION	SUGGESTED LIST PRICE USD ($)

Select One Code From Each Required Category

BASE MACHINE

F.O.B. Davenport, Iowa

1054TC	1200 Hydro Rake	16,613.00

DESTINATION

0202	US/Canada	In Base Price
0230	Australia/New Zealand	Same Price
0195	Mexico	Same Price
0250	All Other Countries	Same Price

REAR MOUNTED ATTACHMENTS

2001	72 In. Rear Prong-Blade Rake	In Base Price
2010	Less Rear Attachment	-767.00

ATTACHMENTS - ORDER AS DESIRED

	CE Kit:	
9330	Battery Label Kit *This kit must be ordered to meet battery labeling requirement in Brazil.*	No Charge
	Miscellaneous:	
9001	Hydro Rake 40 In. Front Blade	1,546.00
9002	Hydro Rake Scarifier	847.00
9006	Light Kit *Includes Wiring Harness, Two Front and One Rear Light.*	212.00
9007	Mid Mount Cultivator Shoes/Blades	678.00

1200 Hydro Rake

Continued

CODE	ATTACHMENT IDENTIFIER	DESCRIPTION	SUGGESTED LIST PRICE USD ($)
		ATTACHMENTS FOR FIELD CONVERSION	
		Miscellaneous:	
	TCB10889	Hydro Rake 40 In. Front Blade	1,654.21
	TCB10891	Hydro Rake 72 In. Rear Mounted Prong Blade Rake	820.69
	TCB10890	Hydro Rake Scarifier	906.29
	BTC10094	Light Kit *Includes Wiring Harness, two Front and on Rear Light.*	226.84
	TCB10939	Mid Mount Cultivator Shoes/Blades	725.46

ProGator 2020A (Gas)

Equipment for Base Machine

34.0 HP (25.4 kW) at 3600 rpm Engine Manufacturer Gross Power per SAE J1349
Tested in accordance with SAE J1995 970 cc
The engine hp and torque information are provided by the engine manufacturer to be used for comparison purposes only. Actual operating hp and torque will be less.
Refer to the engine manufacturer's website for additional information.
Four Cylinder, Liquid-cooled Gas Engine
Electronic Fuel Injection
Overhead Valves
Full Pressure Lubrication
Replaceable Dual Dry-Type Element Air Cleaner with Remote Intake
8.1 Gal. (30.7L) Fuel Capacity
Transistor Controlled Ignition
Electric Start
55 Amp, Regulated Alternator
500 CCA Battery
Halogen Headlights
5-Speed Syncromesh Transmission
Enclosed Transaxle
4 Wheel Hydraulic Disk Brakes
Hand Operated Parking Brake
4th & 5th Gear Lockout
Hydraulic Steering
Leaf Spring and Shock Absorber Suspension
Hourmeter
Tachometer
Digital Speedometer
Power Take-Off Light
Engine Coolant Temperature Gauge
Voltage Indicator Light
4WD Indicator Light
Oil Pressure Light
Horn
Two Professional High Back, Tilt Forward Seats
Two-Post ROPS
Seat Belts
Glove Box
Cup Holders

CODE	ATTACHMENT IDENTIFIER	DESCRIPTION	SUGGESTED LIST PRICE USD ($)

Select One Code From Each Required Category

BASE MACHINE

F.O.B. Raleigh, North Carolina

1403TC	ProGator 2020A (Gas)	23,870.00

DESTINATION

0202	US/CANADA	In Base Price
0230	AUSTRALIA/NEW ZEALAND	Same Price
0195	MEXICO	Same Price
0250	ALL OTHER COUNTRIES	Same Price

TRACTION DRIVE UNIT

1000	2WD Traction Unit	In Base Price
1001	4WD Traction Unit	5,321.00

AUXILIARY HYDRAULICS

2000	Factory Installed Auxiliary Hydraulics	In Base Price
2001	Less Auxiliary Hydraulics	-1,324.00

ATTACHMENTS - ORDER AS DESIRED

Miscellaneous:

9010	Tailgate Release Kit	229.00

ProGator 2020A (Gas)

Continued

CODE	ATTACHMENT IDENTIFIER	DESCRIPTION	SUGGESTED LIST PRICE USD ($)
		ATTACHMENTS - ORDER AS DESIRED Continued...	
9020		Turn Signal Kit *Includes Four Lamp Assemblies and Wire Harness.*	202.00
9030		Electronic Multi-Mode Throttle/Governor Control Kit *Recommended for Use with TC125 and HD200 /300 Sprayers with manual spray controllers. Compatible only with gas ProGators.*	308.00
9040		Armrest Kit (One Set)	75.00
9051		Cargo Box	1,853.00
9060		Cargo Box Bedliner	374.00
9080		Quick Connect Kit *Includes (2) VGB10058 Quick Connect Kits.*	132.00
9085		Smooth Front Wheels and Tires, 23x10.5-12 (4 PR) *Set of (2) wheels and (2) tires. Traction will be limited in some conditions.*	450.00
9090		Smooth Rear Wheels and Tires, 26x14-12 (4 PR) *Set of (2) wheels and (2) tires. Traction will be limited in some conditions.*	557.00
9095		Fairway Rear Wheels and Tires, 26x14-12 (4 PR) *Set of (2) wheels and (2) tires.*	557.00
		ATTACHMENTS FOR FIELD CONVERSION	
		Hydraulics:	
	TCB11078	Auxiliary Hydraulic Kit *For MY2011 and prior 2020A and 2030A ProGators. Refer to DTAC Solution 80643 for Installation on 2020 and 2030 ProGators.*	923.41
	TCB11681	Auxiliary Hydraulic Kit *For MY2012 and beyond. 2020A and 2030A ProGators less factory installed auxiliary hydraulics.*	923.41
		Miscellaneous:	
	BTC10091	4-Post ROPS Conversion Kit (Green) *Required for Use on HD300 Sprayer. Retrofitable to MY11 and earlier ProGators.*	1,652.09
	BM20003	Armrest Kit (One Set)	80.26
	BTC10262	Cargo Box	1,982.71
	VGB10040	Cargo Box Bedliner	400.19
	VGB10027	Cushman Core Harvester Adapter Kit *Requires Auxiliary Hydraulics and Cargo Box. Recommend BM19955 Throttle Governor Control Kit. Early Model Cushman Core Harvesters (6"" x 16"" Tire on a 6"" Wheel) Require Additional Spacer VG10687 From Service Parts.*	877.40
	BTC10261	Electronic Multi-Mode Throttle/Governor Control Kit *Recommended for Use with TC125 and HD200 /300 Sprayers with manual spray controllers. Compatible only with MY 2012 gas ProGators.*	329.56
	BTC10097	Fairway Rear (2) Tires and (2) Wheels, 26x14-12 (4 PR) *Required for Use on HD300 Sprayer.*	595.99

ProGator 2020A (Gas)
Continued

CODE	ATTACHMENT IDENTIFIER	DESCRIPTION	SUGGESTED LIST PRICE USD ($)
		ATTACHMENTS FOR FIELD CONVERSION Continued...	
	BM20433	Heavy Duty Front Spring Kit *Required for Use on HD300 Sprayer.*	251.46
	TCB10910	Heavy Duty Rear Spring Kit *Required for Use on HD300 Sprayer.*	251.46
	TCU23674	John Deere Golf Operator Videos and All Products Safety Video DVD Set	See Parts
	VGB10047	Mud Flaps Kit	49.21
	VGB10050	Multi-Purpose Platform *Required For Use with Vicon Mounting Kit (VGB10051) and Fifth Wheel Hitch Ball (BM19773).*	1,068.93
	VGB10058	Quick Connect Kit *Includes (2) VGB10058 Quick Connect Kits.*	70.61
	BM20502	Rear Receiver Hitch Kit - HDUV *No Ball Mount Comes with the Hitch.*	265.36
	AM128945	Receiver Pintle Adapter Kit	See Parts
	BTC10095	Smooth Front (2) Wheels and (2)Tires, 23x10.5-12 (4 PR) *Set of (2) wheels and (2) tires.*	481.50
	BTC10096	Smooth Rear (2) Tires and (2) Wheels, 26x14-12 (4 PR) *Traction will be limited with smooth tires. Required for Use on HD300 Sprayer.*	595.99
	BM19954	Tailgate Release Kit	245.03
	BM19955	Throttle/Governor Control Kit *Recommended for Use with TC125 and HD200 /300 Sprayers with manual spray controllers. Compatible with MY 2011 and earlier gas ProGators and all model years of Diesel ProGators.*	398.04
	TCB11193	Turn Signal Kit *Includes Four Lamp Assemblies and Wire Harness.*	216.14
	VGB10051	Vicon Spreader Mounting Kit *Requires Auxiliary Hydraulic Kit (TCB11078)and Multi-Purpose Platform (VGB10050).*	1,553.64
	BM20705	Wide Rear Multi-Trac (2) Tires and (2) Wheels, 26 x 14-12 (4 PR) *Required for Use on HD300 Sprayer.*	595.99
	BM19776	Work Light Kit *Includes Two Front and One Rear Work Light.*	266.43
		Order Zone:	
	LP36023	Ezy-Lift System	In Catalog

ProGator 2030A (Diesel)

Equipment for Base Machine

22.1 (16.5 kW) Net HP* (1115 cc), Three Cylinder Yanmar Diesel, 4 Cycle, Liquid Cooled
Overhead Valves
Full Pressure Lubrication
Replaceable Dual Dry-Type Element Air Cleaner with Remote Intake
8 Gal. (30.3L) Fuel Capacity
Transistor Controlled Ignition
Electric Start
55 Amp, Regulated Alternator
500 CCA Battery
Halogen Headlights
5-Speed Syncromesh Transmission
Enclosed Transaxle
4 Wheel Hydraulic Disk Brakes
Hand Operated Parking Brake
4th & 5th Gear Lockout
Hydraulic Steering
Leaf Spring and Shock Absorber Suspension
Hourmeter
Tachometer
Digital Speedometer
Power Take-Off Light
Engine Coolant Temperature Gauge
Voltage Indicator Light
4WD Indicator Light
Oil Pressure Light
Horn
Two Professional High Back, Tilt Forward Seats
Two-Post ROPS
Seat Belts
Glove Box
Cup Holders
*Engine HP is Provided by the Engine Manufacturer to be Used for Comparison Purposes Only, Actual Operating HP will be Less

CODE	ATTACHMENT IDENTIFIER	DESCRIPTION	SUGGESTED LIST PRICE USD ($)
		Select One Code From Each Required Category	
		BASE MACHINE	
		F.O.B. Raleigh, North Carolina	
1413TC		ProGator 2030A (Diesel)	25,994.00
		DESTINATION	
0202		US/CANADA	In Base Price
0230		AUSTRALIA/NEW ZEALAND	Same Price
0179		Europe	71.00
0195		MEXICO	Same Price
0250		ALL OTHER COUNTRIES	Same Price
		TRACTION DRIVE UNIT	
1000		2WD Traction Unit	In Base Price
1001		4WD Traction Unit	5,321.00
		AUXILIARY HYDRAULICS	
2000		Factory Installed Auxiliary Hydraulics	In Base Price
2001		Less Auxiliary Hydraulics	-1,324.00
		ATTACHMENTS - ORDER AS DESIRED	
		Miscellaneous:	
9010		Tailgate Release Kit	229.00

ProGator 2030A (Diesel)

Continued

CODE	ATTACHMENT IDENTIFIER	DESCRIPTION	SUGGESTED LIST PRICE USD ($)
		ATTACHMENTS - ORDER AS DESIRED Continued...	
9020		Turn Signal Kit *Includes Four Lamp Assemblies and Wire Harness.*	202.00
9035		Throttle/Governor Control Kit *For use with sprayers, topdressers, spreaders, and TC125. For Diesel units only.*	372.00
9040		Armrest Kit (One Set)	75.00
9051		Cargo Box	1,853.00
9060		Cargo Box Bedliner	374.00
9080		Quick Connect Kit *Includes (2) VGB10058 Quick Connect Kits.*	132.00
9085		Smooth Front Wheels and Tires, 23x10.5-12 (4 PR) *Set of (2) wheels and (2) tires. Traction will be limited in some conditions.*	450.00
9090		Smooth Rear Wheels and Tires, 26x14-12 (4 PR) *Set of (2) wheels and (2) tires. Traction will be limited in some conditions.*	557.00
9095		Fairway Rear Wheels and Tires, 26x14-12 (4 PR) *Set of (2) wheels and (2) tires.*	557.00
		ATTACHMENTS FOR FIELD CONVERSION	
		Engine:	
	TCA19916	B20 Biodiesel Conversion Kit *This kit converts one machine to use B20 Diesel fuel.*	See Parts
		Hydraulics:	
	TCB11078	Auxiliary Hydraulic Kit *For MY2011 and prior 2020A and 2030A ProGators. Refer to DTAC Solution 80643 for Installation on 2020 and 2030 ProGators.*	923.41
	TCB11681	Auxiliary Hydraulic Kit *For MY2012 and beyond. 2020A and 2030A ProGators less factory installed auxiliary hydraulics.*	923.41
		Miscellaneous:	
	BTC10091	4-Post ROPS Conversion Kit (Green) *Required for Use on HD300 Sprayer. Retrofitable to MY11 and earlier ProGators.*	1,652.09
	BM20003	Armrest Kit (One Set)	80.26
	BTC10262	Cargo Box	1,982.71
	VGB10040	Cargo Box Bedliner	400.19
	VGB10027	Cushman Core Harvester Adapter Kit *Requires Auxiliary Hydraulics and Cargo Box. Recommend BM19955 Throttle Governor Control Kit. Early Model Cushman Core Harvesters (6"" x 16"" Tire on a 6"" Wheel) Require Additional Spacer VG10687 From Service Parts.*	877.40
	BTC10097	Fairway Rear (2) Tires and (2) Wheels, 26x14-12 (4 PR) *Required for Use on HD300 Sprayer.*	595.99

ProGator 2030A (Diesel)

Continued

CODE	ATTACHMENT IDENTIFIER	DESCRIPTION	SUGGESTED LIST PRICE USD ($)
		ATTACHMENTS FOR FIELD CONVERSION Continued...	
	BM20433	Heavy Duty Front Spring Kit *Required for Use on HD300 Sprayer.*	251.46
	TCB10910	Heavy Duty Rear Spring Kit *Required for Use on HD300 Sprayer.*	251.46
	TCU23674	John Deere Golf Operator Videos and All Products Safety Video DVD Set	See Parts
	VGB10047	Mud Flaps Kit	49.21
	VGB10050	Multi-Purpose Platform *Required For Use with Vicon Mounting Kit (VGB10051)* *and Fifth Wheel Hitch Ball (BM19773).*	1,068.93
	VGB10058	Quick Connect Kit *Includes (2) VGB10058 Quick Connect Kits.*	70.61
	BM20502	Rear Receiver Hitch Kit - HDUV *No Ball Mount Comes with the Hitch.*	265.36
	AM128945	Receiver Pintle Adapter Kit	See Parts
	BTC10095	Smooth Front (2) Wheels and (2)Tires, 23x10.5-12 (4 PR) *Set of (2) wheels and (2) tires.*	481.50
	BTC10096	Smooth Rear (2) Tires and (2) Wheels, 26x14-12 (4 PR) *Traction will be limited with smooth tires. Required for Use on HD300 Sprayer.*	595.99
	BM19954	Tailgate Release Kit	245.03
	BM19955	Throttle/Governor Control Kit *For use with sprayers, topdressers, spreaders, and TC125. For Diesel units only.*	398.04
	TCB11193	Turn Signal Kit *Includes Four Lamp Assemblies and Wire Harness.*	216.14
	VGB10051	Vicon Spreader Mounting Kit *Requires Auxiliary Hydraulic Kit (TCB11078)and* *Multi-Purpose Platform (VGB10050).*	1,553.64
	BM20705	Wide Rear Multi-Trac (2) Tires and (2) Wheels, 26 x 14-12 (4 PR) *Required for Use on HD300 Sprayer.*	595.99
	BM19776	Work Light Kit *Includes Two Front and One Rear Work Light.*	266.43
		Order Zone:	
	LP36023	Ezy-Lift System	In Catalog

HD200 SelectSpray
(For ProGators 2020A, 2020 and 2030A, 2030)

Equipment for Base Machine

200 Gallon Sprayer Tank
Electric Boom Control Valves
Electric Flow Regulating Valve
Spray Pump with Hydraulic Drive
Manual Controller for Diaphragm Pump
Non-Siphoning Top Fill
Rugged Booms with Standard Electro-Hydraulic Lift
Personal Wash Tank
Jet Agitation
Heavy Duty Frame
Self-Cleaning Line Strainer
Triple Nozzle Bodies
Quick Remove Spray Controls
Bi-Directional Boom Breakaway
No-tool Sprayer Removal and Attachment
Standard Throttling Valves

CODE	ATTACHMENT IDENTIFIER	DESCRIPTION	SUGGESTED LIST PRICE USD ($)
		Select One Code From Each Required Category	
		BASE MACHINE	
		F.O.B. Davenport, Iowa	
3765M		HD200 SelectSpray (For ProGators 2020A, 2020 and 2030A, 2030) *Requires Auxiliary Hydraulics.* *BM19955 Throttle/Governor Control Kit is Recommended for sprayers equipped with manual spray controller.*	9,948.00
		DESTINATION	
0202		US/Canada	In Base Price
0230		Australia/New Zealand	Same Price
0179		Europe	361.00
0195		Mexico	Same Price
0250		All Other Countries	Same Price
		PUMP	
1002		Diaphragm Pump	2,186.00
1003		Cast Iron Centrifugal Pump	In Base Price
1004		Stainless Steel Centrifugal Pump	508.00
		SPRAY CONTROLS	
2001		Manual Controller for Diaphragm Pump *Available unitl current inventory is exhausted.*	Same Price
2002		Automatic Rate Controller for Centrifugal or Diaphragm Pump	1,710.00
2003		Digital Manual Rate Controller for Centrifugal or Diaphragm Pump	746.00

HD200 SelectSpray
(For ProGators 2020A, 2020 and 2030A, 2030)

Continued

CODE	ATTACHMENT IDENTIFIER	DESCRIPTION	SUGGESTED LIST PRICE USD ($)
		SPRAY BOOM	
3000		18 Ft. Spray Boom w/ Electro-Hydraulic Lift	In Base Price
3001		Multi-Size Boom, 15 ft. and 21 ft. (4.6M and 6.4M) w/ Electro-Hydraulic Lift	383.00
3010		Less Spray Boom	-3,551.00
		ATTACHMENTS - ORDER AS DESIRED	
		Miscellaneous:	
9000		Extended Range Flat-Fan Style Nozzle Package *Contains (13) Nozzle Tips, Caps, and Screens.* *Rated Pressure .4 GPM at 40 psi.*	163.00
9005		Flood Style Nozzle Package *Contains (13) Nozzle Tips, Caps, and Screens.* *Rated Pressure .4 GPM at 40 psi.*	186.00
9010		Low Drift Nozzle Kit *Contains (13) Nozzle Tips and Caps.*	144.00
9020		Rinse Deflector Kit	213.00
9030		Electric Foam Marker	1,481.00
9040		Sprayer Storage Stand	874.00
9045		CleanLoad Chemical Eductor	2,022.00
9050		Manual Reel and 200 Ft. of 1/2 In. Hose, Less Spraygun *Cannot be Used with Code 9055.*	1,141.00
9055		Electric Reel and 200 Ft. of 1/2 In. Hose, Less Spraygun *Cannot be Used with Code 9050.*	1,835.00
9060		Spraygun	174.00
9070		Ground Plane Wheel *For Use with Code 3001 (Multi-Size Boom).*	575.00
9075		20 Gallon Rinse Tank	650.00
9810		Smooth Front (2) Wheels and (2) Tires, 23x10.5-12 (4 PR) *Set of (2) wheels and (2) tires.*	450.00
		ATTACHMENTS FOR FIELD CONVERSION	
		Hydraulics:	
	TCB11078	Auxiliary Hydraulic Kit *For model years 2011 and before. For 2020A and 2030A ProGators. Refer to DTAC Solution 80643 for Installation on 2020 and 2030 ProGators.*	923.41
	TCB11681	Auxiliary Hydraulic Kit *For model year 2012 and beyond 2020A and 2030A ProGators less factory installed auxiliary hydraulics.*	923.41
		Miscellaneous:	

HD200 SelectSpray
(For ProGators 2020A, 2020 and 2030A, 2030)
Continued

CODE	ATTACHMENT IDENTIFIER	DESCRIPTION	SUGGESTED LIST PRICE USD ($)
		ATTACHMENTS FOR FIELD CONVERSION Continued...	
	TCB10933	20 Gallon Rinse Tank	695.50
	BTC10091	4-Post ROPS Conversion Kit (Green) *Required for Use on HD300 Sprayer. Retrofitable to MY11 and earlier ProGators.*	1,652.09
	BTC10062	CleanLoad Chemical Eductor	2,163.54
	BTC10061	Electric Foam Marker	1,584.67
	BM19261	Electric Reel and 200 Ft. of 1/2 In. Hose, Less Spraygun	1,963.46
	BTC10261	Electronic Multi-Mode Throttle/Governor Control Kit *Recommended for Use with TC125 and HD200 /300 Sprayers with manual spray controllers. Compatible only with MY 2012 and up gas ProGators.*	329.56
	BM19256	Extended Range Flat-Fan Style Nozzle Package	174.41
	BTC10097	Fairway Rear (2) Tires and (2) Wheels, 26x14-12 (4 PR) *Required for Use on HD300 Sprayer.*	595.99
	BM19335	Flood Style Nozzle Package	199.01
	BM19257	Ground Plane Wheel	615.26
	BM20433	Heavy Duty Front Spring Kit *Required for Use on HD300 Sprayer.*	251.46
	TCB10910	Heavy Duty Rear Spring Kit *Required for Use on HD300 Sprayer.*	251.46
	VGB10129	Low Drift Nozzle Kit	154.09
	TCB11518	Manual Controller for Centrifugal Pump *Available unitl current inventory is exhausted.*	935.19
	BM19260	Manual Reel and 200 Ft. of 1/2 In. Hose, Less Spraygun	1,220.87
	BM19979	Rinse Deflector Kit	227.91
	BTC10095	Smooth Front (2) Wheels and (2)Tires, 23x10.5-12 (4 PR) *Set of (2) wheels and (2) tires.*	481.50
	BTC10096	Smooth Rear (2) Tires and (2) Wheels, 26x14-12 (4 PR) *Traction will be limited with smooth tires. Required for Use on HD300 Sprayer.*	595.99
	BTC10063	Sprayer Storage Stand	849.00
	BM19876	Spraygun	186.19
	BM19955	Throttle/Governor Control Kit *For Diesel units only. Not compatible with Gas 2020A ProGators.*	398.04
	BM20705	Wide Rear Multi-Trac (2) Tires and (2) Wheels, 26 x 14-12 (4 PR) *Required for Use on HD300 Sprayer.*	595.99
		Pump:	

HD200 SelectSpray
(For ProGators 2020A, 2020 and 2030A, 2030)

Continued

CODE	ATTACHMENT IDENTIFIER	DESCRIPTION	SUGGESTED LIST PRICE USD ($)
		ATTACHMENTS FOR FIELD CONVERSION Continued...	
	BTC10073	Cast Iron Centrifugal Pump	994.03
	BTC10064	Diaphragm Pump	3,333.06
	BTC10074	Stainless Steel Centrifugal Pump	1,537.59
		Spray Boom	
	BTC10323	18 Ft. Spray Boom w/ Electro-Hydraulic Lift	3,799.57
	BTC10014	Multi-Size Boom, 15 ft. and 21 ft. (4.6M and 6.4M) w/ Electro-Hydraulic Lift	4,209.39
		Spray Control:	
	DSTB56277	Automatic Rate Controller Quick Reference Guide - Metric	See Parts
	DSTB56276	Automatic Rate Controller Quick Reference Guide - US Standard	See Parts
	TCB11430	Automatic Rate Controller for Centrifugal or Diaphragm Pump	2,764.89
	BTC10268	Digital Manual Controller for Centrifugal or Diaphragm Pump	1,733.40
	TCB11519	Manual Controller for Diaphragm Pump *Available unitl current inventory is exhausted.*	935.19

HD300 SelectSpray
(For ProGators 2020A, 2020 and 2030A, 2030)

Equipment for Base Machine

300 Gallon Sprayer Tank
Electric Boom Control Valves
Electric Flow Regulating Valve
Spray Pump with Hydraulic Drive
Manual Controller for Diaphragm Pump
Non-Siphoning Top Fill
Rugged Booms with Standard Electro-Hydraulic Lift
Personal Wash Tank
Jet Agitation
Heavy Duty Frame
Self-Cleaning Line Strainer
Triple Nozzle Bodies
Quick Remove Spray Controls
Bi-Directional Boom Breakaway
No-tool Sprayer Removal and Attachment
Standard Throttling Valves

CODE	ATTACHMENT IDENTIFIER	DESCRIPTION	SUGGESTED LIST PRICE USD ($)
		Select One Code From Each Required Category	
		BASE MACHINE	
		F.O.B. Davenport, Iowa	
1154TC		HD300 SelectSpray (For ProGators 2020A, 2020 and 2030A, 2030) *Requires TCB11078 Auxiliary Hydraulic Kit. BM19955 Throttle/Governor Control Kit is Recommended.*	10,925.00
		DESTINATION	
0202		US/Canada	In Base Price
0230		Australia/New Zealand	Same Price
0195		Mexico	Same Price
0250		All Other Countries	Same Price
		PUMP	
1002		Diaphragm Pump	2,186.00
1003		Cast Iron Centrifugal Pump	In Base Price
1004		Stainless Steel Centrifugal Pump	508.00
		SPRAY CONTROLS	
2001		Manual Controller for Diaphragm Pump *Available unitl current inventory is exhausted.*	Same Price
2002		Automatic Rate Controller for Centrifugal or Diaphragm Pump	1,710.00
2003		Digital Manual Rate Controller for Centrifugal or Diaphragm Pump	746.00
		SPRAY BOOM	
3000		18 Ft. Spray Boom w/ Electro-Hydraulic Lift	In Base Price

HD300 SelectSpray
(For ProGators 2020A, 2020 and 2030A, 2030)

Continued

CODE	ATTACHMENT IDENTIFIER	DESCRIPTION	SUGGESTED LIST PRICE USD ($)
		SPRAY BOOM Continued...	
3001		Multi-Size Boom, 15 ft. and 21 ft. (4.6M and 6.4M) w/ Electro-Hydraulic Lift	383.00
3010		Less Spray Boom	-3,551.00
		ATTACHMENTS - ORDER AS DESIRED	
		Miscellaneous:	
9000		Extended Range Flat-Fan Style Nozzle Package *Contains (13) Nozzle Tips, Caps, and Screens.* *Rated Pressure .4 GPM at 40 psi.*	163.00
9005		Flood Style Nozzle Package *Contains (13) Nozzle Tips, Caps, and Screens.* *Rated Pressure .4 GPM at 40 psi.*	186.00
9010		Low Drift Nozzle Kit *Contains (13) Nozzle Tips and Caps.*	144.00
9020		Rinse Deflector Kit	213.00
9030		Electric Foam Marker	1,481.00
9040		Sprayer Storage Stand	874.00
9045		CleanLoad Chemical Eductor	2,022.00
9050		Manual Reel and 200 Ft. of 1/2 In. Hose, Less Spraygun *Cannot be Used with Code 9055.*	1,141.00
9055		Electric Reel and 200 Ft. of 1/2 In. Hose, Less Spraygun *Cannot be Used with Code 9050.*	1,835.00
9060		Spraygun	174.00
9070		Ground Plane Wheel *For Use with Code 3001 (Multi-Size Boom).*	575.00
9075		20 Gallon Rinse Tank	650.00
9080		4-Post ROPS Conversion Kit (Green) *Required for Use on HD300 Sprayer.*	1,544.00
9085		Heavy Duty Rear Spring Kit *Required for Use on HD300 Sprayer.*	235.00
9090		Heavy Duty Front Spring Kit *Required for Use on HD300 Sprayer.*	235.00
9810		Smooth Front (2) Wheels and (2) Tires, 23x10.5-12 (4 PR) *Set of (2) wheels and (2) tires.*	450.00
9095		Wide Rear Multi-Trac (2) Tires and (2) Wheels, 26 x 14-12 (4 PR) *Required for Use on HD300 Sprayer.*	557.00
9799		Smooth Rear (2) Tires and (2) Wheels, 26x14-12 (4 PR) *Traction will be limited with smooth tires. Required for Use on HD300 Sprayer.*	557.00

HD300 SelectSpray
(For ProGators 2020A, 2020 and 2030A, 2030)

Continued

CODE	ATTACHMENT IDENTIFIER	DESCRIPTION	SUGGESTED LIST PRICE USD ($)
		ATTACHMENTS - ORDER AS DESIRED Continued...	
9800		Fairway Rear (2) Tires and (2) Wheels, 26x14-12 (4 PR) *Required for Use on HD300 Sprayer.*	557.00
		ATTACHMENTS FOR FIELD CONVERSION	
		Hydraulics:	
	TCB11078	Auxiliary Hydraulic Kit *For model years 2011 and before. For 2020A and 2030A ProGators. Refer to DTAC Solution 80643 for Installation on 2020 and 2030 ProGators.*	923.41
	TCB11681	Auxiliary Hydraulic Kit *For model year 2012 and beyond 2020A and 2030A ProGators less factory installed auxiliary hydraulics.*	923.41
		Miscellaneous:	
	TCB10933	20 Gallon Rinse Tank	695.50
	BTC10091	4-Post ROPS Conversion Kit (Green) *Required for Use on HD300 Sprayer. Retrofitable to MY11 and earlier ProGators.*	1,652.09
	BTC10062	CleanLoad Chemical Eductor	2,163.54
	BTC10061	Electric Foam Marker	1,584.67
	BM19261	Electric Reel and 200 Ft. of 1/2 In. Hose, Less Spraygun	1,963.46
	BTC10261	Electronic Multi-Mode Throttle/Governor Control Kit *Recommended for Use with TC125 and HD200 /300 Sprayers with manual spray controllers. Compatible only with MY 2012 and up gas ProGators.*	329.56
	BM19256	Extended Range Flat-Fan Style Nozzle Package	174.41
	BTC10097	Fairway Rear (2) Tires and (2) Wheels, 26x14-12 (4 PR) *Required for Use on HD300 Sprayer.*	595.99
	BM19335	Flood Style Nozzle Package	199.01
	BM19257	Ground Plane Wheel	615.26
	BM20433	Heavy Duty Front Spring Kit *Required for Use on HD300 Sprayer.*	251.46
	TCB10910	Heavy Duty Rear Spring Kit *Required for Use on HD300 Sprayer.*	251.46
	VGB10129	Low Drift Nozzle Kit	154.09
	TCB11518	Manual Controller for Centrifugal Pump *Available unitl current inventory is exhausted.*	935.19
	BM19260	Manual Reel and 200 Ft. of 1/2 In. Hose, Less Spraygun	1,220.87
	BM19979	Rinse Deflector Kit	227.91

HD300 SelectSpray
(For ProGators 2020A, 2020 and 2030A, 2030)
Continued

CODE	ATTACHMENT IDENTIFIER	DESCRIPTION	SUGGESTED LIST PRICE USD ($)
		ATTACHMENTS FOR FIELD CONVERSION Continued...	
	BTC10095	Smooth Front (2) Wheels and (2)Tires, 23x10.5-12 (4 PR) *Set of (2) wheels and (2) tires.*	481.50
	BTC10096	Smooth Rear (2) Tires and (2) Wheels, 26x14-12 (4 PR) *Traction will be limited with smooth tires. Required for Use on HD300 Sprayer.*	595.99
	BTC10063	Sprayer Storage Stand	849.00
	BM19876	Spraygun	186.19
	BM19955	Throttle/Governor Control Kit *For Diesel units only. Not compatible with Gas 2020A ProGators.*	398.04
	BM20705	Wide Rear Multi-Trac (2) Tires and (2) Wheels, 26 x 14-12 (4 PR) *Required for Use on HD300 Sprayer.*	595.99
		Pump:	
	BTC10073	Cast Iron Centrifugal Pump	994.03
	BTC10064	Diaphragm Pump	3,333.06
	BTC10074	Stainless Steel Centrifugal Pump	1,537.59
		Spray Boom	
	BTC10323	18 Ft. Spray Boom w/ Electro-Hydraulic Lift	3,799.57
	BTC10014	Multi-Size Boom, 15 ft. and 21 ft. (4.6M and 6.4M) w/ Electro-Hydraulic Lift	4,209.39
		Spray Control:	
	DSTB56277	Automatic Rate Controller Quick Reference Guide - Metric	See Parts
	DSTB56276	Automatic Rate Controller Quick Reference Guide - US Standard	See Parts
	TCB11430	Automatic Rate Controller for Centrifugal or Diaphragm Pump	2,764.89
	BTC10268	Digital Manual Controller for Centrifugal or Diaphragm Pump	1,733.40
	TCB11519	Manual Controller for Diaphragm Pump *Available unitl current inventory is exhausted.*	935.19

TD100 Top Dresser
(For ProGators 2020A, 2020 and 2030A, 2030)

Equipment for Base Machine

Galvanized Steel Hopper
Color Coded
 Hydraulic Hoses
Metering Gate From 0-3 In.
 with Infinite Adjustment
Hopper Capacity
 12 Cu. Ft. Leveled
  and 19 Cu. Ft. Heaped

Seamless Conveyor Belt
58 In. Spread Width
Quick Attach Design
3 Pin Installation
Counter Rotating Brush
190 RPM Brush Speed
Adjustable Brush Height

CODE	ATTACHMENT IDENTIFIER	DESCRIPTION	SUGGESTED LIST PRICE USD ($)
		Select One Code From Each Required Category	
		BASE MACHINE	
		F.O.B. Davenport, Iowa	
0251TC		TD100 Top Dresser (For ProGators 2020A, 2020 and 2030A, 2030) *Requires TCB11078 Auxiliary Hydraulic Kit.*	7,838.00
		ATTACHMENTS - ORDER AS DESIRED	
		European CE Kit:	
9100		European CE Conversion Kit for TD100 Top Dresser *Must Be Ordered to Receive a TD100 Top Dresser Which Meets CE Requirements. Kit Includes a Screen Cover, Latch Mount Bracket, Hardware, Pictorial Decals and Operator's Manuals in English, French, German, Italian and Spanish.*	649.00
		ATTACHMENTS FOR FIELD CONVERSION	
		Hydraulics:	
	TCB11078	Auxiliary Hydraulic Kit *For MY2011 and prior 2020A and 2030A ProGators. Refer to DTAC Solution 80643 for Installation on 2020 and 2030 ProGators.*	923.41
		Miscellaneous:	
	TCU13584	Raised Profile Conveyor Belt	See Parts

Aercore 800 Aerator

Equipment for Base Machine

31.5 In. (80.0 cm) Coring Width
4 Heavy Duty Tine Rams
5 Speed Transmission
1 Transport Speed
4 Coring Speeds
Heavy Duty Frame
Set of 4X Tine Holders for Tines with 3/4 In. (19mm) Mounting Diameter
Less Tines
Turf Guards
Core Deflector Shields
Chain Tensioners
25 HP (18.6 kW) Kohler Command Engine
Electro-Hydraulic Lift System
Operator Presence System
Tire Scrapers
20 X 10 - 10.00 Tires
Drive Wheel Core Deflectors
Flexi-Link Adjustable Hole Spacing
Meets Carb Standards

CODE	ATTACHMENT IDENTIFIER	DESCRIPTION	SUGGESTED LIST PRICE USD ($)

Select One Code From Each Required Category

BASE MACHINE

F.O.B. Davenport, Iowa

4566TC		Aercore 800 Aerator	19,237.00

DESTINATION

0202		US/Canada	In Base Price
0230		Australia/New Zealand	Same Price
0179		Europe	137.00
0250		All Other Countries	Same Price

ATTACHMENTS - ORDER AS DESIRED

CE Kit:

9330		Battery Label Kit *This kit must be ordered to meet battery labeling requirement in Brazil.*	No Charge

Miscellaneous:

9010		Windrow Attachment	324.00
9030		Mini Tine Kit *Includes 4 Mini Tine Holders, 2 Turf Guards and 24 1/4 In. Open Sided Mini Tines.*	678.00
9040		Needle Tine Kit *Includes 4 Needle Tine Holders, 2 Turf Guards and 24 (5mm) Needle Tines.*	530.00
9050		Verticutter	3,765.00

ATTACHMENTS FOR FIELD CONVERSION

CE Kit:

	BTC10256	Battery Label Kit *This kit must be ordered to meet battery labeling requirement in Brazil.*	0.00

Aercore 800 Aerator
Continued

CODE	ATTACHMENT IDENTIFIER	DESCRIPTION	SUGGESTED LIST PRICE USD ($)
		ATTACHMENTS FOR FIELD CONVERSION Continued...	
		European CE Kit:	
	TCB11746	European CE Conversion Kit for Aercore 800 *Must be Ordered to Receive an Aercore 800 Aerator Which meets CE Requirements. Kit Includes Tine Guard (CE), Latch Cover, Parking Brake Lever, Hardware, Pictorial Decals and Operator's Manuals in English, French, German, Spanish and Italian.*	See Parts
		Miscellaneous:	
	BM19666	Mini Tine Kit *Includes 4 Mini Tine Holders, 2 Turf Guards and 24 1/4 In. Open Sided Mini Tines.*	725.46
	TCB10525	Needle Tine Kit *Includes 4 Needle Tine Holders, 2 Turf Guards and 24 (5mm) Needle Tines.*	567.10
	TCB10059	Speed Control Kit *For Installation on 4600 and 4700 Tractors.*	See Parts
	TCB11072	Verticutter	4,028.56
	BM19073	Windrow Attachment	346.69
		Tine Holders:	
	AMT1831	4X Tine Holder, Less Tines, and Core Deflector	See Parts
	TCA51330	4X Tine Holder, Less Tines, and Core Deflector	See Parts
	AMT1832	Mini Tine Holder, Less Tines & Core Deflector	See Parts
	TCA51345	Needle Tine Holder, Less Tines & Core Deflector	See Parts
		Tines:	
	TCU17331	1 In. HD Side-Eject	See Parts
	TCU17333	1 In. HD Tubular Top-Eject	See Parts
	TCU17332	1 In. HDT Side-Eject	See Parts
	TCU17334	1 In. HDT Tubular Top-Eject	See Parts
	TCU17450	1/2 In. (12.7 mm) Tubular Tine	See Parts
	TCU17343	1/2 In. HD Tubular	See Parts
	TCU17345	1/2 In. HDT Side-Eject	See Parts
	TCU17344	1/2 In. HDT Tubular	See Parts
	TCU17452	1/4 In. (6 mm) Open Sided Mini Tine	See Parts
	TCU17456	13/16 In. HD Side-Eject	See Parts
	TCU17457	13/16 In. HDT Side-Eject	See Parts
	TCU18638	3/4 In. (19mm) Tubular Tine	See Parts
	TCU17454	3/4 In. HD Tubular	See Parts

Aercore 800 Aerator
Continued

CODE	ATTACHMENT IDENTIFIER	DESCRIPTION	SUGGESTED LIST PRICE USD ($)
		ATTACHMENTS FOR FIELD CONVERSION Continued...	
	TCU17341	3/4 In. HDT Side-Eject	See Parts
	TCU17340	3/4 In. HDT Tubular	See Parts
	TCU17449	3/8 In. (9.5 mm) Tubular Tine	See Parts
	TCU17346	3/8 In. Solid HD x 5 In.	See Parts
	TCU15712	5 mm Needle Tine	See Parts
	TCU17451	5/8 In. (16 mm) Tubular Tine	See Parts
	TCU17338	5/8 In. HD Solid	See Parts
	TCU17339	5/8 In. HD Solid	See Parts
	TCU17335	5/8 In. HD Tubular	See Parts
	TCU17337	5/8 In. HDT Side-Eject	See Parts
	TCU17336	5/8 In. HDT Tubular	See Parts
	TCU17342	7/8 In. HD Side-Eject	See Parts
	TCU15726	8 mm Needle Tine	See Parts
	TCU17352	Bayonet Tine with 3/4 In. Rib HD	See Parts
	TCU17349	Cross with 1/2 In. Rib HD	See Parts
	TCU17350	Cross with 1/2 In. Rib HDT	See Parts
	TCU17453	Quad Tine HDT	See Parts
	TCU17351	Super Cross with 3/4 In. Rib HD	See Parts
	TCU17347	Super Quad HD	See Parts
	TCU17348	Super Quad HDT	See Parts
		Turf Guards:	
	MT4886	Left Hand Turf Guard for 4X Tine Holder	See Parts
	MT4941	Left Hand Turf Guard for Mini Tines	See Parts
	MT4885	Right Hand Turf Guard for 4X Tine Holder	See Parts
	MT4942	Right Hand Turf Guard for Mini Tines	See Parts

Aercore 1000 Aerator

Equipment for Base Machine

37.5 In. (95.3 cm) Coring Width
Cat. 1 3-Point Hitch
Heavy Duty Frame
Turf Guard
Less Tines
Tine Holders
Parking Stand
4 Heavy Duty Tine Rams
540 RPM PTO Shaft
Flexi-Link Adjustable Hole Spacing
Core Deflector Shields

CODE	ATTACHMENT IDENTIFIER	DESCRIPTION	SUGGESTED LIST PRICE USD ($)
		Select One Code From Each Required Category	
		BASE MACHINE	
		F.O.B. Davenport, Iowa	
4523M		Aercore 1000 Aerator	9,995.00
		DESTINATION	
0202		US/Canada	In Base Price
0230		Australia/New Zealand	Same Price
0179		Europe	237.00
0195		Mexico	Same Price
0250		All Other Countries	Same Price
		TINE HOLDERS	
1010		4X Tine Holders for Tines with 3/4 In. (19mm) Mounting Diameter *Set of 4.*	In Base Price
1020		4X Tine Holders for Tines with 7/8 In. (22.2 mm) Mounting Diameter *Set of 4.*	Same Price
1030		3X Tine Holders for Tines with 7/8 In. (22.2mm) Mounting Diameter *Set of 4.*	Same Price
1040		Mini Tine Holders for Tines with 3/8 In. (9.5mm) Mounting Diameter *Set of 4.*	-84.00
1050		Needle Tine Holders for 5 mm and 8 mm Needle Tines *Set of 4.*	-134.00
		TURF GUARDS	
2010		Turf Guards for all 4X Tine Holders *Complete Set of Turf Guards. Tines and Tine Holders not included.*	In Base Price
2020		Turf Guards for 3X Tine Holders *Complete Set of Turf Guards. Tines and Tine Holders not included.*	15.00

Aercore 1000 Aerator
Continued

CODE	ATTACHMENT IDENTIFIER	DESCRIPTION	SUGGESTED LIST PRICE USD ($)
		TURF GUARDS Continued...	
2030		Turf Guards for Mini Tine and Needle Tine Holders *Complete Set of Turf Guards. Tines and Tine Holders not included.*	20.00
		PTO SHAFT	
3010		Category I Double Telescoping PTO Shaft *For most tractors equipped with Category I 3-pt. hitches.*	In Base Price
3020		Category II Double Telescoping PTO Shaft *For most tractors equipped with Category II 3-pt. hitches.*	Same Price
		ATTACHMENTS - ORDER AS DESIRED	
		Miscellaneous:	
9010		Windrow Attachment	324.00
9020		Set of 4X Tine Holders for Tines with 3/4 In. (19mm) Mounting Diameter *(Set of 4) Does not include Tines or Turf Guards*	516.00
9040		Set of 3X Tine Holders for Tines with 7/8 In. (22.2mm) Mounting Diameter *(Set of 4) Does not include Tines or Turf Guards.*	516.00
9050		Set of Mini Tine Holders for Tines with 3/8 In. (9.5mm) Mounting Diameter *(Set of 4) Does not include Tines or Turf Guards.*	432.00
9060		Set of Needle Tine Holders for 5mm and 8mm Needle Tines *(Set of 4) Does not include Tines or Turf Guards.*	382.00
9070		Turf Guards for all 4X Tine Holders *Complete Set of Turf Guards. Tines and Tine Holders not included.*	124.00
9080		Turf Guards for 3X Tine Holders *Complete Set of Turf Guards. Tines and Tine Holders not included.*	139.00
9090		Turf Guards for Mini Tine and Needle Tine Holders *Complete Set of Turf Guards. Tines and Tine Holders not included.*	144.00
		ATTACHMENTS FOR FIELD CONVERSION	
		Tine Holders:	
	BTC10182	Set of (2) 3X Tine Holders for Tines with 3/4 In. (19 mm) Mounting Diameter	276.06
	BTC10180	Set of (2) 4X Tine Holders for Tines with 3/4 In. (19 mm) Mounting Diameter	276.06
	BTC10184	Set of (2) Mini Tine Holders for Tines with 3/8 In. (9.5 mm) Mounting Diameter	204.37
	BTC10187	Turf Guard Base Kit for all 4X Tine Holders	132.69

Aercore 1500 Aerator

Equipment for Base Machine

57.5 In. (146.1 cm) Coring Width
Cat. 1 3-Point Hitch
Heavy Duty Frame
Turf Guard
Less Tines
Tine Holders
Parking Stand
6 Heavy Duty Tine Rams
540 RPM PTO Shaft
Flexi-Link Adjustable Hole Spacing
Core Deflector Shields

CODE	ATTACHMENT IDENTIFIER	DESCRIPTION	SUGGESTED LIST PRICE USD ($)
		Select One Code From Each Required Category	
		BASE MACHINE	
		F.O.B. Davenport, Iowa	
4553M		Aercore 1500 Aerator	29,288.00
		DESTINATION	
0202		US/Canada	In Base Price
0230		Australia/New Zealand	Same Price
0179		Europe	237.00
0195		Mexico	Same Price
0250		All Other Countries	Same Price
		TINE HOLDERS	
1010		4X Tine Holders for Tines with 3/4 In. (19mm) Mounting Diameter *Set of 6.*	Same Price
1020		4X Tine Holders for Tines with 7/8 In. (22.2 mm) Mounting Diameter *Set of 6.*	In Base Price
1030		3X Tine Holders for Tines with 7/8 In. (22.2mm) Mounting Diameter *Set of 6.*	Same Price
1040		Mini Tine Holders for Tines with 3/8 In. (9.5mm) Mounting Diameter *Set of 6.*	-124.00
1050		Needle Tine Holders for 5 mm and 8 mm Needle Tines *Set of 6.*	-201.00
		TURF GUARDS	
2010		Turf Guards for all 4X Tine Holders *Complete Set of Turf Guards. Tines and Tine Holders not included.*	In Base Price
2020		Turf Guards for 3X Tine Holders *Complete Set of Turf Guards. Tines and Tine Holders not included.*	25.00

Aercore 1500 Aerator
Continued

CODE	ATTACHMENT IDENTIFIER	DESCRIPTION	SUGGESTED LIST PRICE USD ($)
		TURF GUARDS Continued...	
2030		Turf Guards for Mini Tine and Needle Tine Holders *Complete Set of Turf Guards. Tines and Tine Holders not included.*	30.00
		PTO SHAFT	
3010		Category I Double Telescoping PTO Shaft *For most tractors equipped with Category I 3-pt. hitches.*	In Base Price
3020		Category II Double Telescoping PTO Shaft *For most tractors equipped with Category II 3-pt. hitches.*	Same Price
		ATTACHMENTS - ORDER AS DESIRED	
		Miscellaneous:	
9010		Windrow Attachment	380.00
9020		Set of 4X Tine Holders for Tines with 3/4 In. (19mm) Mounting Diameter *(Set Of 6) Does not include Tines or Turf Guards.*	774.00
9030		Set of 4X Tine Holders for Tines with 7/8 In. (22.2mm) Mounting Diameter *(Set of 6) Does not include Tines or Turf Guards.*	774.00
9040		Set of 3X Tine Holders for Tines with 7/8 In. (22.2mm) Mounting Diameter *(Set of 6) Does not include Tines or Turf Guards.*	774.00
9050		Set of Mini Tine Holders for Tines with 7/8 In. (22.2mm) Mounting Diameter *(Set of 6) Does not Include Tines or Turf Guards.*	648.00
9060		Set of Needle Tine Holders for 5mm and 8mm Needle Tines *(Set of 6) Does not include Tines or Turf Guards.*	573.00
9070		Turf Guards for all 4X Tine Holders *Complete Set of Turf Guards. Tines and Tine Holders not included.*	186.00
9080		Turf Guards for 3X Tine Holders *Complete Set of Turf Guards. Tines and Tine Holders not included.*	211.00
9090		Turf Guards for Mini Tine and Needle Tine Holders *Complete Set of Turf Guards. Tines and Tine Holders not included.*	216.00
		ATTACHMENTS FOR FIELD CONVERSION	
		Miscellaneous:	
	BM18886	Windrow Attachment	406.60
		Tine Holders:	
	BTC10182	Set of (2) 3X Tine Holders for Tines with 3/4 In. (19 mm) Mounting Diameter *Does not include Tines or Turf Guards.*	276.06
	BTC10183	Set of (2) 3X Tine Holders for Tines with 3/4 In. (19 mm) Mounting Diameter *Does not include Tines or Turf Guards.*	231.11
	BTC10180	Set of (2) 4X Tine Holders for Tines with 3/4 In. (19 mm) Mounting Diameter *Does not include Tines or Turf Guards.*	276.06

Aercore 1500 Aerator
Continued

CODE	ATTACHMENT IDENTIFIER	DESCRIPTION	SUGGESTED LIST PRICE USD ($)
		ATTACHMENTS FOR FIELD CONVERSION Continued...	
	BTC10181	Set of (2) 4X Tine Holders for Tines with 7/8 In. (22.2 mm) Mounting Diameter *Does not include Tines or Turf Guards.*	276.06
	BTC10184	Set of (2) Mini Tine Holders for Tines with 3/8 In. (9.5 mm) Mounting Diameter *Does not include Tines or Turf Guards.*	204.37
	BTC10186	Turf Guard Add Kit for all 3X Tine Holders *Complete set of 3X Turf Guards for Aercore 1500 requires (1) BTC10185 and (1) BTC10186.*	77.04
	BTC10188	Turf Guard Add Kit for all 4X Tine Holders *Complete set of 4X Turf Guards for Aercore 1500 requires (1) BTC10185 and (1) BTC10186.*	66.34
	BTC10190	Turf Guard Add Kit for all Mini and Needle Tine Holders *Complete set of Mini / Needle Tine Turf Guards for Aercore 1500 requires (1) BTC10189 and (1) BTC10190.*	77.04
	BTC10185	Turf Guard Base Kit for all 3X Tine Holders *Complete set of 3X Turf Guards for Aercore 1500 requires (1) BTC10185 and (1) BTC10186.*	148.73
	BTC10187	Turf Guard Base Kit for all 4X Tine Holders *Complete set of 4X Turf Guards for Aercore 1500 requires (1) BTC10185 and (1) BTC10186.*	132.69
	BTC10189	Turf Guard Base Kit for all Mini and Needle Tine Holders *Complete set of Mini / Needle Tine Turf Guards for Aercore 1500 requires (1) BTC10189 and (1) BTC10190.*	154.09
		Tines:	
	TCU17331	1 In. HD Side-Eject	See Parts
	TCU17333	1 In. HD Tubular Top-Eject	See Parts
	TCU17332	1 In. HDT Side-Eject	See Parts
	TCU17334	1 In. HDT Tubular Top-Eject	See Parts
	TCU17343	1/2 In. HD Tubular	See Parts
	TCU17345	1/2 In. HDT Side-Eject	See Parts
	TCU17344	1/2 In. HDT Tubular	See Parts
	TCU17452	1/4 In. (6 mm) Open Sided Mini Tine	See Parts
	TCU17456	13/16 In. HD Side-Eject	See Parts
	TCU17457	13/16 In. HDT Side-Eject	See Parts
	TCU18638	3/4 In. (19mm) Tubular Tine	See Parts
	TCU17454	3/4 In. HD Tubular	See Parts
	TCU17341	3/4 In. HDT Side-Eject	See Parts

Aercore 1500 Aerator
Continued

CODE	ATTACHMENT IDENTIFIER	DESCRIPTION	SUGGESTED LIST PRICE USD ($)
		ATTACHMENTS FOR FIELD CONVERSION Continued...	
	TCU17340	3/4 In. HDT Tubular	See Parts
	TCU17346	3/8 In. Solid HD x 5 In.	See Parts
	TCU15712	5 mm Needle Tine *Aercore 1500 with Needle Tine Holders Requires 42.*	See Parts
	TCU17338	5/8 In. HD Solid	See Parts
	TCU17339	5/8 In. HD Solid	See Parts
	TCU17335	5/8 In. HD Tubular	See Parts
	TCU17337	5/8 In. HDT Side-Eject	See Parts
	TCU17336	5/8 In. HDT Tubular	See Parts
	TCU17342	7/8 In. HD Side-Eject	See Parts
	TCU15726	8 mm Needle Tine *Aercore 1500 with Needle Tine Holders Requires 42.*	See Parts
	TCU17352	Bayonet Tine with 3/4 In. Rib HD	See Parts
	TCU17349	Cross with 1/2 In. Rib HD	See Parts
	TCU17350	Cross with 1/2 In. Rib HDT	See Parts
	TCU17453	Quad Tine HDT	See Parts
	TCU17351	Super Cross with 3/4 In. Rib HD	See Parts
	TCU17347	Super Quad HD	See Parts
	TCU17348	Super Quad HDT	See Parts

Aercore 2000 Aerator

Equipment for Base Machine

77.5 In. (190.6 cm) Coring Width
Cat. 1 3-Point Hitch
Heavy Duty Frame
Turf Guards
Less Tines
Tine Holders
Parking Stand
8 Heavy Duty Tine Rams
540 RPM PTO Shaft
Flexi-Link Adjustable Hole Spacing
Core Deflector Shields

CODE	ATTACHMENT IDENTIFIER	DESCRIPTION	SUGGESTED LIST PRICE USD ($)

Select One Code From Each Required Category

BASE MACHINE

F.O.B. Davenport, Iowa

0402TC	Aercore 2000 Aerator	33,437.00

DESTINATION

0202	US/Canada	In Base Price
0230	Australia/New Zealand	Same Price
0179	Europe	237.00
0195	Mexico	Same Price
0250	All Other Countries	Same Price

TINE HOLDERS

1010	4X Tine Holders for Tines with 3/4 In. (19mm) Mounting Diameter *Set of 8. Tines are not included.*	Same Price
1020	4X Tine Holders for Tines with 7/8 In. (22.2 mm) Mounting Diameter *Set of 8. Tines are not included.*	In Base Price
1030	3X Tine Holders for Tines with 7/8 In. (22.2mm) Mounting Diameter *Set of 8. Tines are not included.*	Same Price

TURF GUARDS

2010	Turf Guards for all 4X Tine Holders *Complete Set of Turf Guards. Tines and Tine Holders not included.*	In Base Price
2020	Turf Guards for 3X Tine Holders *Complete Set of Turf Guards. Tines and Tine Holders not included.*	35.00

PTO SHAFT

3010	Category I Double Telescoping PTO Shaft *For most tractors equipped with Category I 3-pt. hitches.*	In Base Price

Aercore 2000 Aerator
Continued

CODE	ATTACHMENT IDENTIFIER	DESCRIPTION	SUGGESTED LIST PRICE USD ($)
		PTO SHAFT Continued...	
3020		Category II Double Telescoping PTO Shaft *For most tractors equipped with Category II 3-pt. hitches.*	Same Price
		ATTACHMENTS - ORDER AS DESIRED	
		Miscellaneous:	
9020		Set of 4X Tine Holders for Tines with 3/4 In. (19mm) Mounting Diameter *(Set of 8) Does not Include Tines or Turf Guards.*	1,032.00
9030		Set of 4X Tine Holders for Tines with 7/8 In. (22.2mm) Mounting Diameter *(Set of 8) Does not Include Tines or Turf Guards.*	1,032.00
9040		Set of 3X Tine Holders for Tines with 7/8 In. (22.2mm) Mounting Diameter *(Set of 8) Does not Include Tines or Turf Guards.*	1,032.00
9070		Turf Guards for all 4X Tine Holders *Complete Set of Turf Guards. Tines and Tine Holders not included.*	248.00
9080		Turf Guards for 3X Tine Holders *Complete Set of Turf Guards. Tines and Tine Holders not included.*	283.00
		ATTACHMENTS FOR FIELD CONVERSION	
		Tine Holders:	
	BTC10182	Set of (2) 3X Tine Holders for Tines with 3/4 In. (19 mm) Mounting Diameter *Does not include Tines or Turf Guards.*	276.06
	BTC10180	Set of (2) 4X Tine Holders for Tines with 3/4 In. (19 mm) Mounting Diameter *Does not include Tines or Turf Guards.*	276.06
	BTC10181	Set of (2) 4X Tine Holders for Tines with 7/8 In. (22.2 mm) Mounting Diameter *Does not include Tines or Turf Guards.*	276.06
	BTC10186	Turf Guard Add Kit for all 3X Tine Holders *Complete set of 3X Turf Guards for Aercore 2000 requires (1) BTC10185 and (2) BTC10186.*	77.04
	BTC10188	Turf Guard Add Kit for all 4X Tine Holders *Complete set of 4X Turf Guards for Aercore 2000 requires (1) BTC10187 and (2) BTC10188.*	66.34
	BTC10190	Turf Guard Add Kit for all Mini and Needle Tine Holders	77.04
	BTC10185	Turf Guard Base Kit for all 3X Tine Holders *Complete set of 3X Turf Guards for Aercore 2000 requires (1) BTC10185 and (2) BTC10186.*	148.73
	BTC10187	Turf Guard Base Kit for all 4X Tine Holders *Complete set of 4X Turf Guards for Aercore 2000 requires (1) BTC10187 and (2) BTC10188.*	132.69
	BTC10189	Turf Guard Base Kit for all Mini and Needle Tine Holders	154.09
		Tines:	
	TCU17331	1 In. HD Side-Eject	See Parts

Aercore 2000 Aerator
Continued

CODE	ATTACHMENT IDENTIFIER	DESCRIPTION	SUGGESTED LIST PRICE USD ($)
		ATTACHMENTS FOR FIELD CONVERSION Continued...	
	TCU17333	1 In. HD Tubular Top-Eject	See Parts
	TCU17332	1 In. HDT Side-Eject	See Parts
	TCU17334	1 In. HDT Tubular Top-Eject	See Parts
	TCU17343	1/2 In. HD Tubular	See Parts
	TCU17345	1/2 In. HDT Side-Eject	See Parts
	TCU17344	1/2 In. HDT Tubular	See Parts
	TCU17452	1/4 In. (6 mm) Open Sided Mini Tine	See Parts
	TCU17456	13/16 In. HD Side-Eject	See Parts
	TCU17457	13/16 In. HDT Side-Eject	See Parts
	TCU18638	3/4 In. (19mm) Tubular Tine	See Parts
	TCU17454	3/4 In. HD Tubular	See Parts
	TCU17341	3/4 In. HDT Side-Eject	See Parts
	TCU17340	3/4 In. HDT Tubular	See Parts
	TCU17346	3/8 In. Solid HD x 5 In.	See Parts
	TCU17338	5/8 In. HD Solid	See Parts
	TCU17339	5/8 In. HD Solid	See Parts
	TCU17335	5/8 In. HD Tubular	See Parts
	TCU17337	5/8 In. HDT Side-Eject	See Parts
	TCU17336	5/8 In. HDT Tubular	See Parts
	TCU17342	7/8 In. HD Side-Eject	See Parts
	TCU17352	Bayonet Tine with 3/4 In. Rib HD	See Parts
	TCU17349	Cross with 1/2 In. Rib HD	See Parts
	TCU17350	Cross with 1/2 In. Rib HDT	See Parts
	TCU17453	Quad Tine HDT	See Parts
	TCU17351	Super Cross with 3/4 In. Rib HD	See Parts
	TCU17347	Super Quad HD	See Parts
	TCU17348	Super Quad HDT	See Parts

TC125 Turf Collection System

Equipment for Base Machine

Hydraulic Requirements:
6 gpm, 2000 psi (Miniumum Continuous)
48 In. (121.9 cm) Gathering Width
25 Cu. Ft. (0.71 cu. m) Hopper Capacity
Attaches With Standard 3/4 In. (19 mm) Hitch Pin
Offset Towing Feature Allows the Unit to be Towed Either Directly Behind or Offset to the Left Side of the Towing Vehicle
3 (1/2 In.) Quick Connect Couplers (2 Rotary Brush, 1 Lift Cylinder)
Long Hose Kit for use with Compact Utility Tractors with 1/2 In. Forward Couplers
49 In. (124.5 cm) Dump Height Clearance
Hydraulic Lift Cylinder
Hydraulic Powered Rotary Brush
500 - 600 RPM Brush Speed
6 In. (15.24 cm) Diameter
Full Width Roller
Clears Cores of an Average Green in 15 Minutes with One Person Operation
Two 26.5x14-12 Tires

CODE	ATTACHMENT IDENTIFIER	DESCRIPTION	SUGGESTED LIST PRICE USD ($)

Select One Code From Each Required Category

BASE MACHINE

F.O.B. Davenport, Iowa

0132TC	TC125 Turf Collection System *Vehicle Requirements: Powered by a Compact Utility Tractor with a Selective Control Valve (SCV) or a ProGator With Auxiliary Hydraulics. Use with ProGator may Require Quick Connect Kit (VGB10058), See Sales Manual for Serial Number Breaks.*	11,881.00

DESTINATION

0202	US/Canada	In Base Price
0230	Australia/New Zealand	Same Price
0179	Europe	Same Price
0195	Mexico	Same Price
0250	All Other Countries	Same Price

Hydraulic Hose Kits

If 3/8 In. Hydraulic Adapters and Couplers on 90 Degree Fittings are Required, See Sales Manual for Required Service Parts.

1000	Less Hose Kit	-479.00
1001	Long Hose Kit *For Tractor with 1/2 In. Forward Couplers.*	In Base Price
1002	Short Hose Kit *For ProGator or Tractor with 1/2 In. Rear Couplers.*	-69.00

ATTACHMENTS FOR FIELD CONVERSION

TC125 Turf Collection System

Continued

CODE	ATTACHMENT IDENTIFIER	DESCRIPTION	SUGGESTED LIST PRICE USD ($)
		ATTACHMENTS FOR FIELD CONVERSION Continued...	
		Hydraulics:	
	TCB11078	Auxiliary Hydraulic Kit *For MY2011 and prior 2020A and 2030A ProGators. Refer to DTAC Solution 80643 for Installation on 2020 and 2030 ProGators.*	923.41
		Miscellaneous:	
	TCB10032	Hose Kit, Long *For Tractor with 1/2 In. Forward Couplers.*	512.53
	TCB10033	Hose Kit, Short *For ProGator or Tractor with 1/2 In. Rear Couplers.*	438.70
	VGB10058	Quick Connect Kit *ProGator may Require Quick Connect Kit. See Sales Manual for Serial Number Breaks.*	70.61
	TCA13146	Roller Scraper *For Serial Numbers 015001 and below, the Following Brackets need to be Ordered (Machines above Serial Number 015001 will have the Brackets Installed), (2) MT 6430 and (2) MT 6682.*	See Parts
	TCB10061	Selective Control Valve Bracket *For Model 955 Tractor.*	See Parts
	TCB10062	Selective Control Valve Bracket *For Model 870, 970 and 1070 Tractors.*	See Parts
	TCB10063	Selective Control Valve Bracket *For Model 4210, 4310 and 4410 Tractors.*	See Parts
	TCB10064	Selective Control Valve Bracket *For 4000 Twenty Series Tractors.*	See Parts
	TCB10015	Speed Control Kit *For Installation on 4210, 4310 and 4410 Tractors.*	See Parts
	TCB10059	Speed Control Kit *For Installation on 4600 and 4700 Tractors.*	See Parts
	BM19955	Throttle/Governor Control Kit *Recommended for Use with ProGators.*	398.04

Z235 EZtrak Residential Zero-Turn-Radius Mower with 42 In. Edge Deck - US Only

Equipment for Base Machine

ENGINE:
20 Horsepower *
  Engine
V-Twin Design
Cast Iron Cylinder Liner
Full Pressure Lubrication
  with Replaceable Oil Filter
Air Cooled
EDGE CUTTING SYSTEM:
42 In. Side Discharge
.25 In. Cut Height Increments
1 to 4 In. Cutting Heights
3 Point Mounting System
Deck Transport Position
Mulch Capable
Wash Port
FUEL SYSTEM:
2.1 U.S. Gallon Fuel Tank
  Capacity
Gasoline
ELECTRICAL SYSTEM:
12 Volt Battery
195 CCA Battery
Hour Meter
Seat/PTO Interlock Switches
Electric Mower/Implement PTO
  Drive Clutch
TRANSMISSION:
Hydro-Gear EZT
7.0 mph Forward, 3.5 mph Reverse
  Travel Speed
Twin Stick Speed & Direction
  Control Levers
Tow Valves
Zero Turning Radius
Easy Access Tracking Adjustment
TIRES:
11X4.0-4 Front Caster Wheel
  Tires
18X7.5-8 Rear Turf Drive
  Tires
SEAT:
15 In. High Back Seat
  with Spring Suspension
3 In. Seat Adjustment Travel
MISCELLANEOUS:
Cup Holder
Covered Storage Compartment
Flip up Foot Platform for Easy
  Service Access
18 Position Adjustable Motion
  Control Levers
Dry Weight--460 lbs.
*Engine HP is Provided by the
  Engine Manufacturer to be Used
  for Comparison Purposes Only,
    Actual Operating HP will be
    Less. Refer to the Engine
    Manufacturer's Web Site for
    Additional Information

CODE	ATTACHMENT IDENTIFIER	DESCRIPTION	SUGGESTED LIST PRICE USD ($)

Select One Code From Each Required Category

Z235 EZtrak

F.O.B. Janesville, Wisconsin

5441M		Z235 EZtrak Residential Zero-Turn-Radius Mower with 42 In. Edge Deck - US Only	2,499.00

DESTINATION

001A		United States and Canada	In Base Price
001C		Australia and New Zealand	Same Price
0245		Guam	Same Price
001D		All Other Countries	Same Price

ATTACHMENTS FOR FIELD CONVERSION

		Engine:	
	AM123168	Spark Arrestor Kit	See Parts
		Material Collection System Hoppers:	
	BM24286	6.5 Bushel Hopper, Ballast, and Chute for 42 In. Decks *Fits Z235 models only (Serial # 130001-)*	588.50
		Miscellaneous:	
	BM24481	Attachment Bar and Hitch Kit *Fits Z235 & Z255 models only (Serial # 130001-).*	148.73

Z235 EZtrak Residential Zero-Turn-Radius Mower with 42 In. Edge Deck - US Only
Continued

CODE	ATTACHMENT IDENTIFIER	DESCRIPTION	SUGGESTED LIST PRICE USD ($)
		ATTACHMENTS FOR FIELD CONVERSION Continued...	
	BM24485	Ballast Bracket Kit *Fits Z235 & Z255 models only (Serial # 130001-).*	99.99
	AM36786	Battery Charger (110 Volt)	See Parts
	BM24357	Headlight Kit *Fits Z235 & Z255 models only (Serial # 130001-).*	299.60
	LG276	Home Maintenance Kit *(Serial # 130001-)*	See Parts
	AM143587	Seat Slide Kit *Fits Z235 & Z255 models only (Serial # 130001-).*	See Parts
	BM24486	Traction Mat Kit *Fits Z235 & Z255 models only (Serial # 130001-).*	39.99
		Mower Deck and Mower Deck Attachments:	
	BM24458	42 In. Edge Deck *(Serial # 130001-)*	695.50
	AM141031	Blade Kit (42, 3-N-1, Starlock)	See Parts
	AM141034	Blade Kit (42X, Bagging)	See Parts
	AM141033	Blade Kit (42X, Mulching)	See Parts
	AM141032	Blade Kit (42X, Side Discharge)	See Parts
	BM24259	Foot Lift Kit *Fits Z235 & Z255 models only (Serial # 130001-).*	56.71
	BM20505	Front Blowout Baffle for 42 In. Mower (42C/42X)	38.51
	AM130907	Mower Deck Leveling Gauge	See Parts
	BM21816	Mulch Kit (42 In. or 42X) *For 100's, L100's, LT, SST, X300's, EZtrak, D100's*	99.51
		Order Zone:	
	LP98107	Protective Cover	In Catalog
		Spanish North American Kit:	
	BM24474	Spanish Label & Owner's Manual Kit *For Model Year 2013 (Serial # 130001-).*	90.96

EXTENDED WARRANTY - RESIDENTIAL OWNERS/USE

Visit http://www.JohnDeere.com/ServicePlans for more information on John Deere Service Contracts. May not be Available in Parts of the U.S., Not Available in Canada. Price may vary due to driving distance and/or time from machine to dealership location.

John Deere Extended Service Plan - 3-Year Option *3-year extended service plan. (1 year of extended service protection); 3-years of warranty transportation.*	199.99

Z235 EZtrak Residential Zero-Turn-Radius Mower with 42 In. Edge Deck - US Only
Continued

CODE	ATTACHMENT IDENTIFIER	DESCRIPTION	SUGGESTED LIST PRICE USD ($)
		EXTENDED WARRANTY - RESIDENTIAL OWNERS/USE Continued...	
		John Deere Extended Service Plan - 4-Year Option *4-year extended service plan. (2 years of extended service protection);* *4-years of warranty transportation.*	249.99

Z235 EZtrak Residential Zero-Turn-Radius Mower with 42 In. Edge Deck, California Model

Equipment for Base Machine

ENGINE:
20 Horsepower *
  Engine
V-Twin Design
Cast Iron Cylinder Liner
Full Pressure Lubrication
  with Replaceable Oil Filter
Air Cooled
EDGE CUTTING SYSTEM:
42 In. Side Discharge
.25 In. Cut Height Increments
1 to 4 In. Cutting Heights
3 Point Mounting System
Deck Transport Position
Mulch Capable
Wash Port
FUEL SYSTEM:
2.1 U.S. Gallon Fuel Tank
  Capacity
Gasoline
ELECTRICAL SYSTEM:
12 Volt Battery
195 CCA Battery
Hour Meter
Seat/PTO Interlock Switches
Electric Mower/Implement PTO
  Drive Clutch
TRANSMISSION:
Hydro-Gear EZT
7.0 mph Forward, 3.5 mph Reverse
  Travel Speed
Twin Stick Speed & Direction
  Control Levers
Tow Valves
Zero Turning Radius
Easy Access Tracking Adjustment
TIRES:
11X4.0-4 Front Caster Wheel
  Tires
18X7.5-8 Rear Turf Drive
  Tires
SEAT:
15 In. High Back Seat
  with Spring Suspension
3 In. Seat Adjustment Travel
MISCELLANEOUS:
Cup Holder
Covered Storage Compartment
Flip up Foot Platform for Easy
  Service Access
18 Position Adjustable Motion
  Control Levers
Dry Weight--460 lbs.
*Engine HP is Provided by the
  Engine Manufacturer to be Used
  for Comparison Purposes Only,
    Actual Operating HP will be
    Less. Refer to the Engine
    Manufacturer's Web Site for
    Additional Information

CODE	ATTACHMENT IDENTIFIER	DESCRIPTION	SUGGESTED LIST PRICE USD ($)

Select One Code From Each Required Category

Z235 EZtrak

F.O.B. Janesville, Wisconsin

5442M		Z235 EZtrak Residential Zero-Turn-Radius Mower with 42 In. Edge Deck, California Model	2,499.00

ATTACHMENTS FOR FIELD CONVERSION

		Engine:	
	AM123168	Spark Arrestor Kit	See Parts
		Material Collection System Hoppers:	
	BM24286	6.5 Bushel Hopper, Ballast, and Chute for 42 In. Decks *Fits Z235 models only (Serial # 130001-)*	588.50
		Miscellaneous:	
	BM24481	Attachment Bar and Hitch Kit *Fits Z235 & Z255 models only (Serial # 130001-).*	148.73
	BM24485	Ballast Bracket Kit *Fits Z235 & Z255 models only (Serial # 130001-).*	99.99
	AM36786	Battery Charger (110 Volt)	See Parts
	BM24357	Headlight Kit *Fits Z235 & Z255 models only (Serial # 130001-).*	299.60
	LG276	Home Maintenance Kit *(Serial # 130001-)*	See Parts

Z235 EZtrak Residential Zero-Turn-Radius Mower with 42 In. Edge Deck, California Model

Continued

CODE	ATTACHMENT IDENTIFIER	DESCRIPTION	SUGGESTED LIST PRICE USD ($)
		ATTACHMENTS FOR FIELD CONVERSION Continued...	
	AM143587	Seat Slide Kit *Fits Z235 & Z255 models only (Serial # 130001-).*	See Parts
	BM24486	Traction Mat Kit *Fits Z235 & Z255 models only (Serial # 130001-).*	39.99
		Mower Deck and Mower Deck Attachments:	
	BM24458	42 In. Edge Deck *(Serial # 130001-)*	695.50
	AM141031	Blade Kit (42, 3-N-1, Starlock)	See Parts
	AM141034	Blade Kit (42X, Bagging)	See Parts
	AM141033	Blade Kit (42X, Mulching)	See Parts
	AM141032	Blade Kit (42X, Side Discharge)	See Parts
	BM24259	Foot Lift Kit *Fits Z235 & Z255 models only (Serial # 130001-).*	56.71
	BM20505	Front Blowout Baffle for 42 In. Mower (42C/42X)	38.51
	AM130907	Mower Deck Leveling Gauge	See Parts
	BM21816	Mulch Kit (42 In. or 42X) *For 100's, L100's, LT, SST, X300's, EZtrak, D100's*	99.51
		Order Zone:	
	LP98107	Protective Cover	In Catalog
		Spanish North American Kit:	
	BM24474	Spanish Label & Owner's Manual Kit *For Model Year 2013 (Serial # 130001-).*	90.96

EXTENDED WARRANTY - RESIDENTIAL OWNERS/USE

Visit http://www.JohnDeere.com/ServicePlans for more information on John Deere Service Contracts. May not be Available in Parts of the U.S., Not Available in Canada. Price may vary due to driving distance and/or time from machine to dealership location.

	John Deere Extended Service Plan - 3-Year Option *3-year extended service plan. (1 year of extended service protection); 3-years of warranty transportation.*	199.99
	John Deere Extended Service Plan - 4-Year Option *4-year extended service plan. (2 years of extended service protection); 4-years of warranty transportation.*	249.99

Z255 EZtrak Residential Zero-Turn-Radius Mower with 48 In. Edge Deck - US Only

Equipment for Base Machine

ENGINE:
22 Horsepower *
V-Twin Design
Cast Iron Cylinder Liners
Full Pressure Lubrication with Replaceable Oil Filter
Air Cooled
EDGE CUTTING SYSTEM:
48 In. Side Discharge
.25 In. Cut Height Increments
1 to 4 In. Cutting Heights
4 Point Mounting System
Deck Transport Position
Mulch Capable
Wash Port
FUEL SYSTEM:
2.1 U.S. Gallon Fuel Tank Capacity
Gasoline
ELECTRICAL SYSTEM:
12 Volt Battery
195 CCA Battery
Hour Meter
Seat/PTO Interlock Switches
Electric Mower/Implement PTO Drive Clutch
TRANSMISSION:
Hydro-Gear EZT
7.0 mph Forward, 3.5 mph Reverse Travel Speed
Twin Stick Speed & Direction Control Levers
Tow Valves
Zero Turning Radius
Easy Access Tracking Adjustment
TIRES:
11X4.0-4 Front Caster Wheel Tires
18X8.5-8 Rear Turf Drive Tires
SEAT:
15 In. High Back Seat with Spring Suspension and Adjustable Armrests
3 In. Seat Adjustment Travel
MISCELLANEOUS:
Cup Holder
Covered Storage Compartment
Flip up Foot Platform for Easy Service Access
18 Position Adjustable Motion Control Levers
Dry Weight--500 lbs.
*Engine HP is Provided by the Engine Manufacturer to be Used for Comparison Purposes Only, Actual Operating HP will be Less. Refer to the Engine Manufacturer's Web Site for Additional Information

CODE	ATTACHMENT IDENTIFIER	DESCRIPTION	SUGGESTED LIST PRICE USD ($)
		Select One Code From Each Required Category	
		Z255 EZtrak	
		F.O.B. Janesville, Wisconsin	
5450M		Z255 EZtrak Residential Zero-Turn-Radius Mower with 48 In. Edge Deck - US Only	2,999.00
		DESTINATION	
001A		United States and Canada	In Base Price
001C		Australia and New Zealand	Same Price
0245		Guam	Same Price
001D		All Other Countries	Same Price
		ATTACHMENTS FOR FIELD CONVERSION	
		Engine:	
	AM123168	Spark Arrestor Kit	See Parts
		Material Collection System Hoppers:	
	BM24384	6.5 Bushel Hopper, Ballast, and Chute for 48 In. Decks *Fits Z255 models only (Serial # 130001-)*	588.50
		Miscellaneous:	
	BM24481	Attachment Bar and Hitch Kit *Fits Z235 & Z255 models only (Serial # 130001-).*	148.73

Z255 EZtrak Residential Zero-Turn-Radius Mower with 48 In. Edge Deck - US Only
Continued

CODE	ATTACHMENT IDENTIFIER	DESCRIPTION	SUGGESTED LIST PRICE USD ($)
		ATTACHMENTS FOR FIELD CONVERSION Continued...	
	BM24485	Ballast Bracket Kit *Fits Z235 & Z255 models only (Serial # 130001-).*	99.99
	AM36786	Battery Charger (110 Volt)	See Parts
	BM24357	Headlight Kit *Fits Z235 & Z255 models only (Serial # 130001-).*	299.60
	LG276	Home Maintenance Kit *(Serial # 130001-)*	See Parts
	AM143587	Seat Slide Kit *Fits Z235 & Z255 models only (Serial # 130001-).*	See Parts
	BM24486	Traction Mat Kit *Fits Z235 & Z255 models only (Serial # 130001-).*	39.99
		Mower Deck and Mower Deck Attachments:	
	BG20470	48" Mower Deck Blowout Kit	49.21
	BM24457	48TD In. Edge Deck *(Serial # 130001-)*	920.20
	AM141035	Blade Kit (48X, 3-N-1, Starlock)	See Parts
	AM141036	Blade Kit, (48X, Bagging, Starlock)	See Parts
	BM24259	Foot Lift Kit *Fits Z235 & Z255 models only (Serial # 130001-).*	56.71
	AM130907	Mower Deck Leveling Gauge	See Parts
	GY20417	Mulch Cover (48 In.)	See Parts
		Order Zone:	
	LP98107	Protective Cover	In Catalog
		Spanish North American Kit:	
	BM24474	Spanish Label & Owner's Manual Kit *For Model Year 2013 (Serial # 130001-).*	90.96

EXTENDED WARRANTY - RESIDENTIAL OWNERS/USE

Visit http://www.JohnDeere.com/ServicePlans for more information on John Deere Service Contracts. May not be Available in Parts of the U.S., Not Available in Canada. Price may vary due to driving distance and/or time from machine to dealership location.

John Deere Extended Service Plan - 3-Year Option *3-year extended service plan. (1 year of extended service protection); 3-years of warranty transportation.*	199.99
John Deere Extended Service Plan - 4-Year Option *4-year extended service plan. (2 years of extended service protection); 4-years of warranty transportation.*	249.99

Z255 EZtrak Residential Zero-Turn-Radius Mower with 48 In. Edge Deck - US Only
Continued

Z255 EZtrak Residential Zero-Turn-Radius Mower with 48 In. Edge Deck, California Model

Equipment for Base Machine

ENGINE:
22 Horsepower *
V-Twin Design
Cast Iron Cylinder Liners
Full Pressure Lubrication with Replaceable Oil Filter
Air Cooled
EDGE CUTTING SYSTEM:
48 In. Side Discharge
.25 In. Cut Height Increments
1 to 4 In. Cutting Heights
4 Point Mounting System
Deck Transport Position
Mulch Capable
Wash Port
FUEL SYSTEM:
2.1 U.S. Gallon Fuel Tank Capacity
Gasoline
ELECTRICAL SYSTEM:
12 Volt Battery
195 CCA Battery
Hour Meter
Seat/PTO Interlock Switches
Electric Mower/Implement PTO Drive Clutch
TRANSMISSION:
Hydro-Gear EZT
7.0 mph Forward, 3.5 mph Reverse Travel Speed
Twin Stick Speed & Direction Control Levers
Tow Valves
Zero Turning Radius
Easy Access Tracking Adjustment
TIRES:
11X4.0-4 Front Caster Wheel Tires
18X8.5-8 Rear Turf Drive Tires
SEAT:
15 In. High Back Seat with Spring Suspension and Adjustable Armrests
3 In. Seat Adjustment Travel
MISCELLANEOUS:
Cup Holder
Covered Storage Compartment
Flip up Foot Platform for Easy Service Access
18 Position Adjustable Motion Control Levers
Dry Weight--500 lbs.
*Engine HP is Provided by the Engine Manufacturer to be Used for Comparison Purposes Only, Actual Operating HP will be Less. Refer to the Engine Manufacturer's Web Site for Additional Information

CODE	ATTACHMENT IDENTIFIER	DESCRIPTION	SUGGESTED LIST PRICE USD ($)

Select One Code From Each Required Category

Z255 EZtrak

F.O.B. Janesville, Wisconsin

5451M		Z255 EZtrak Residential Zero-Turn-Radius Mower with 48 In. Edge Deck, California Model	2,999.00

ATTACHMENTS FOR FIELD CONVERSION

		Engine:	
	AM123168	Spark Arrestor Kit	See Parts
		Material Collection System Hoppers:	
	BM24384	6.5 Bushel Hopper, Ballast, and Chute for 48 In. Decks *Fits Z255 models only (Serial # 130001-)*	588.50
		Miscellaneous:	
	BM24481	Attachment Bar and Hitch Kit *Fits Z235 & Z255 models only (Serial # 130001-).*	148.73
	BM24485	Ballast Bracket Kit *Fits Z235 & Z255 models only (Serial # 130001-).*	99.99
	AM36786	Battery Charger (110 Volt)	See Parts
	BM24357	Headlight Kit *Fits Z235 & Z255 models only (Serial # 130001-).*	299.60
	LG276	Home Maintenance Kit *(Serial # 130001-)*	See Parts

Z255 EZtrak Residential Zero-Turn-Radius Mower with 48 In. Edge Deck, California Model

Continued

CODE	ATTACHMENT IDENTIFIER	DESCRIPTION	SUGGESTED LIST PRICE USD ($)
		ATTACHMENTS FOR FIELD CONVERSION Continued...	
	AM143587	Seat Slide Kit *Fits Z235 & Z255 models only (Serial # 130001-).*	See Parts
	BM24486	Traction Mat Kit *Fits Z235 & Z255 models only (Serial # 130001-).*	39.99
		Mower Deck and Mower Deck Attachments:	
	BG20470	48" Mower Deck Blowout Kit	49.21
	BM24457	48TD In. Edge Deck *(Serial # 130001-)*	920.20
	AM141035	Blade Kit (48X, 3-N-1, Starlock)	See Parts
	AM141036	Blade Kit, (48X, Bagging, Starlock)	See Parts
	BM24259	Foot Lift Kit *Fits Z235 & Z255 models only (Serial # 130001-).*	56.71
	AM130907	Mower Deck Leveling Gauge	See Parts
	GY20417	Mulch Cover (48 In.)	See Parts
		Order Zone:	
	LP98107	Protective Cover	In Catalog
		Spanish North American Kit:	
	BM24474	Spanish Label & Owner's Manual Kit *For Model Year 2013 (Serial # 130001-).*	90.96
		EXTENDED WARRANTY - RESIDENTIAL OWNERS/USE	
		Visit http://www.JohnDeere.com/ServicePlans for more information on John Deere Service Contracts. May not be Available in Parts of the U.S., Not Available in Canada. Price may vary due to driving distance and/or time from machine to dealership location.	
		John Deere Extended Service Plan - 3-Year Option *3-year extended service plan. (1 year of extended service protection); 3-years of warranty transportation.*	199.99
		John Deere Extended Service Plan - 4-Year Option *4-year extended service plan. (2 years of extended service protection); 4-years of warranty transportation.*	249.99

Z425 EZtrak Residential Zero-Turn-Radius Mower with 48 In. Edge Deck - US & Canada

Equipment for Base Machine

ENGINE:
22 Horsepower *
V-Twin Design
Cast Iron Cylinder Liners
Full Pressure Lubrication with Replaceable Oil Filter
Air Cooled
EDGE CUTTING SYSTEM:
48 In. Side Discharge
.25 In. Cut Height Increments
1 to 4 In. Cutting Heights
4 Point Mounting System
Deck Transport Position
Mulch Capable
Wash Port
FUEL SYSTEM:
3.5 U.S. Gallon Fuel Tank Capacity
Gasoline
ELECTRICAL SYSTEM:
12 Volt Battery
195 CCA Battery
Hour Meter
Seat/PTO Interlock Switches
Electric Mower/Implement PTO Drive Clutch
TRANSMISSION:
Tuff-Torq TZT7-D
8.5 mph Forward, 4.0 mph Reverse Travel Speed
Twin Stick Speed & Direction Control Levers
Tow Valves
Zero Turning Radius
Easy Access Tracking Adjustmen
TIRES:
13X5.0-6 Front Caster Wheel Tires
22X9.5-10 Rear Turf Drive Tires
SEAT:
15 In. High Back Seat with Spring Suspension and Adjustable Armrests
3 In. Seat Adjustment Travel
MISCELLANEOUS:
2 Cup Holders
Storage Compartment
Flip up Foot Platform for Easy Service Access
15 Position Adjustable Motion Control Levers
Dry Weight--645 lbs.
*Engine HP is Provided by the Engine Manufacturer to be Used for Comparison Purposes Only, Actual Operating HP will be Less. Refer to the Engine Manufacturer's Web Site for Additional Information

CODE	ATTACHMENT IDENTIFIER	DESCRIPTION	SUGGESTED LIST PRICE USD ($)

Select One Code From Each Required Category

Z425 EZtrak

F.O.B. Janesville, Wisconsin

498BM		Z425 EZtrak Residential Zero-Turn-Radius Mower with 48 In. Edge Deck - US & Canada	3,899.00

DESTINATION

001A		United States and Canada	In Base Price
001C		Australia and New Zealand	Same Price
0195		Mexico	Same Price
0245		Guam	Same Price
001D		All Other Countries	Same Price

ATTACHMENTS FOR FIELD CONVERSION

		Engine:	
	AM123168	Spark Arrestor Kit	See Parts
		Material Collection System Hoppers:	
	BM23634	6.5 Bushel Hopper Assembly *Requires Power Flow Blower and Chute.*	480.43
	BM22797	6.5 Bushel hopper and chute Assembly *Fits 2010 and earlier models only (Serial #-099999)*	480.43

Z425 EZtrak Residential Zero-Turn-Radius Mower with 48 In. Edge Deck - US & Canada

Continued

CODE	ATTACHMENT IDENTIFIER	DESCRIPTION	SUGGESTED LIST PRICE USD ($)
		ATTACHMENTS FOR FIELD CONVERSION Continued...	
		Material Collection System Power Flow Blowers:	
	BM21871	HP Power Flow Blower Assembly for 48X Mower	558.54
		Material Collection System Power Flow/Rear Bagger Chutes:	
	BM21681	Power Flow Chute (7 bu.) *For 48C, 48X, 54C or 54X Series Blowers.*	114.49
		Miscellaneous:	
	AM36786	Battery Charger (110 Volt)	See Parts
	BM22568	EZtrak Special Edition Kit *Contains: bumper, rear hitch, & foot rest extensions.*	157.29
	AM137437	Foot Rest Extensions	See Parts
	BM22808	Headlight Kit *Fits 2010 and earlier models only (Serial # -100000).*	111.29
	BM23575	Headlight Kit *Fits 2011 and later models only (Serial # 100001-)*	128.40
	LG264	Home Maintenance Kit *(Serial # 040001-100000)*	See Parts
	LG268	Home Maintenance Kit *(Serial # 100001-)*	See Parts
	LG263	Home Maintenance Kit *(Serial # -040000)*	See Parts
	AM137380	Rear Bumper	See Parts
	AM137381	Rear Hitch	See Parts
		Mower Deck and Mower Deck Attachments:	
	BM23703	48 In Edge Deck *(Serial # 100001-)*	973.70
	BM23407	48 In. Edge Deck *(Serial # -100000)*	973.70
	AM133764	Anti-Blowout Kit (48C)	See Parts
	BM22970	Foot Lift Kit *Fits Serial #100001-.*	96.30
	BM22596	Front Roller Kit (48C) *Fits Z425 and Z445 (Serial # 010001-).*	55.64
	BM19894	Leaf Bagging Kit (48C/48X Mower) *Contains Three Bolt-on Deck Lips for Improved Bagging of Leaves.*	99.51
	AM130907	Mower Deck Leveling Gauge	See Parts
	BM20007	Mulch Kit (48C/48X)	157.29
		Order Zone:	

Z425 EZtrak Residential Zero-Turn-Radius Mower with 48 In. Edge Deck - US & Canada

Continued

CODE	ATTACHMENT IDENTIFIER	DESCRIPTION	SUGGESTED LIST PRICE USD ($)
		ATTACHMENTS FOR FIELD CONVERSION Continued...	
	LP36199	15 Gallon Sprayer	In Catalog
	LP1500	Floor Mat	In Catalog
	LP1000	Grass Groomer - Lawn Striping Kit	In Catalog
	LP98107	Protective Cover	In Catalog
	BM24474	**Spanish North American Kit:** Spanish Label & Owner's Manual Kit *For Model Year 2013 (Serial # 130001-).*	90.96
		EXTENDED WARRANTY - RESIDENTIAL OWNERS/USE	
		Visit http://www.JohnDeere.com/ServicePlans for more information on John Deere Service Contracts. May not be Available in Parts of the U.S., Not Available in Canada. Price may vary due to driving distance and/or time from machine to dealership location.	
		John Deere Extended Service Plan - 3-Year Option *3-year extended service plan. (1 year of extended service protection); 3-years of warranty transportation.*	249.99
		John Deere Extended Service Plan - 4-Year Option *4-year extended service plan. (2 years of extended service protection); 4-years of warranty transportation.*	289.99

Z425 EZtrak Residential Zero-Turn-Radius Mower with 54 In. Edge Deck - US & Canada

Equipment for Base Machine

ENGINE:
22 Horsepower *
V-Twin Design
Cast Iron Cylinder Liners
Full Pressure Lubrication with Replaceable Oil Filter
Air Cooled
EDGE CUTTING SYSTEM:
54 In. Side Discharge
.25 In. Cut Height Increments
1 to 4 In. Cutting Heights
4 Point Mounting System
Deck Transport Position
Mulch Capable
Wash Port
FUEL SYSTEM:
3.5 U.S. Gallon Fuel Tank Capacity
Gasoline
ELECTRICAL SYSTEM:
12 Volt Battery
195 CCA Battery
Hour Meter
Seat/PTO Interlock Switches
Electric Mower/Implement PTO Drive Clutch
TRANSMISSION:
Tuff-Torq TZT7-D
8.5 mph Forward, 4.0 mph Reverse Travel Speed
Twin Stick Speed & Direction Control Levers
Tow Valves
Zero Turning Radius
Easy Access Tracking Adjustment
TIRES:
13X5.0-6 Front Caster Wheel Tires
22X9.5-10 Rear Turf Drive Tires
SEAT:
15 In. High Back Seat with Spring Suspension and Adjustable Armrests
3 In. Seat Adjustment Travel
MISCELLANEOUS:
2 Cup Holders
Storage Compartment
Floor Mat
Flip up Foot Platform for Easy Service Access
15 Position Adjustable Motion Control Levers
Dry Weight--660 lbs.
*Engine HP is Provided by the Engine Manufacturer to be Used for Comparison Purposes Only, Actual Operating HP will be Less. Refer to the Engine Manufacturer's Web Site for Additional Information

CODE	ATTACHMENT IDENTIFIER	DESCRIPTION	SUGGESTED LIST PRICE USD ($)

Select One Code From Each Required Category

Z425 EZtrak

F.O.B. Janesville, Wisconsin

498DM		Z425 EZtrak Residential Zero-Turn-Radius Mower with 54 In. Edge Deck - US & Canada	3,999.00

DESTINATION

001A		United States and Canada	In Base Price
001C		Australia and New Zealand	Same Price
0245		Guam	Same Price
001D		All Other Countries	Same Price

ATTACHMENTS FOR FIELD CONVERSION

		Engine:	
	AM123168	Spark Arrestor Kit	See Parts
		Material Collection System Hoppers:	
	BM23634	6.5 Bushel Hopper Assembly *Requires Power Flow Blower and Chute.*	480.43
	BM22797	6.5 Bushel hopper and chute Assembly *Fits 2010 and earlier models only (Serial #-099999)*	480.43
		Material Collection System Power Flow Blowers:	

Z425 EZtrak Residential Zero-Turn-Radius Mower with 54 In. Edge Deck - US & Canada

Continued

CODE	ATTACHMENT IDENTIFIER	DESCRIPTION	SUGGESTED LIST PRICE USD ($)
		ATTACHMENTS FOR FIELD CONVERSION Continued...	
	BM21873	HP Power Flow Blower Assembly for 54X Mower	558.54
		Material Collection System Power Flow/Rear Bagger Chutes:	
	BM21681	Power Flow Chute (7 bu.) *For 48C, 48X, 54C or 54X Series Blowers.*	114.49
		Miscellaneous:	
	AM36786	Battery Charger (110 Volt)	See Parts
	BM22568	EZtrak Special Edition Kit *Contains: bumper, rear hitch, & foot rest extensions.*	157.29
	AM137437	Foot Rest Extensions	See Parts
	BM22808	Headlight Kit *Fits 2010 and earlier models only (Serial # -100000).*	111.29
	BM23575	Headlight Kit *Fits 2011 and later models only (Serial # 100001-)*	128.40
	LG264	Home Maintenance Kit *(Serial # 040001-100000)*	See Parts
	LG268	Home Maintenance Kit *(Serial # 100001-)*	See Parts
	LG263	Home Maintenance Kit *(Serial # -040000)*	See Parts
	AM137380	Rear Bumper	See Parts
	AM137381	Rear Hitch	See Parts
		Mower Deck and Mower Deck Attachments:	
	BM23705	54 In Edge Deck *(Serial # 100001-)*	1,162.01
	BM23404	54 In. Edge Deck *(Serial # -060000 and 080001-100000)*	1,162.01
	AM133765	Anti-Blowout Kit (54C)	See Parts
	BM22970	Foot Lift Kit *Fits Serial #100001-.*	96.30
	BM22595	Front Roller Kit (54C) *Fits Z425 and Z445 (Serial # 010001-060000).*	48.16
	BM20985	Leaf Bagging Kit (54C/54X Mower) *Contains Three Bolt-on Deck Lips for Improved Bagging of Leaves.*	124.11
	AM130907	Mower Deck Leveling Gauge	See Parts
	BM20827	Mulch Kit (54C/54D/54X)	212.93
		Order Zone:	

Z425 EZtrak Residential Zero-Turn-Radius Mower with 54 In. Edge Deck - US & Canada

Continued

CODE	ATTACHMENT IDENTIFIER	DESCRIPTION	SUGGESTED LIST PRICE USD ($)
		ATTACHMENTS FOR FIELD CONVERSION Continued...	
	LP36199	15 Gallon Sprayer	In Catalog
	LP1500	Floor Mat	In Catalog
	LP1000	Grass Groomer - Lawn Striping Kit	In Catalog
	LP98107	Protective Cover	In Catalog
	BM24474	**Spanish North American Kit:** Spanish Label & Owner's Manual Kit *For Model Year 2013 (Serial # 130001-).*	90.96
		EXTENDED WARRANTY - RESIDENTIAL OWNERS/USE	
		Visit http://www.JohnDeere.com/ServicePlans for more information on John Deere Service Contracts. May not be Available in Parts of the U.S., Not Available in Canada. Price may vary due to driving distance and/or time from machine to dealership location.	
		John Deere Extended Service Plan - 3-Year Option *3-year extended service plan. (1 year of extended service protection); 3-years of warranty transportation.*	249.99
		John Deere Extended Service Plan - 4-Year Option *4-year extended service plan. (2 years of extended service protection); 4-years of warranty transportation.*	289.99

Z425 EZtrak Residential Zero-Turn-Radius Mower with 54 In. Edge Deck, California Model

Equipment for Base Machine

ENGINE:
22 Horsepower *
V-Twin Design
Cast Iron Cylinder Liners
Full Pressure Lubrication with Replaceable Oil Filter
Air Cooled
EDGE CUTTING SYSTEM:
54 In. Side Discharge
.25 In. Cut Height Increments
1 to 4 In. Cutting Heights
4 Point Mounting System
Deck Transport Position
Mulch Capable
Wash Port
FUEL SYSTEM:
3.5 U.S. Gallon Fuel Tank Capacity
Gasoline
ELECTRICAL SYSTEM:
12 Volt Battery
195 CCA Battery
Hour Meter
Seat/PTO Interlock Switches
Electric Mower/Implement PTO Drive Clutch
AUTOMATIC TRANSMISSION:
Tuff-Torq TZT7-D
8.5 mph Forward, 4.0 mph Reverse Travel Speed
Twin Stick Speed & Direction Control Levers
Tow Valves
Zero Turning Radius
Easy Access Tracking Adjustment
TIRES:
13X5.0-6 Front Caster Wheel Tires
22X9.5-10 Rear Turf Drive Tires
SEAT:
15 In. High Back Seat with Spring Suspension and Adjustable Armrests
3 In. Seat Adjustment Travel
MISCELLANEOUS:
2 Cup Holders
Storage Compartment
Floor Mat
Flip up Foot Platform for Easy Service Access
15 Position Adjustable Motion Control Levers
Dry Weight--660 lbs.
*Engine HP is Provided by the Engine Manufacturer to be Used for Comparison Purposes Only, Actual Operating HP will be Less. Refer to the Engine Manufacturer's Web Site for Additional Information

CODE	ATTACHMENT IDENTIFIER	DESCRIPTION	SUGGESTED LIST PRICE USD ($)

Select One Code From Each Required Category

Z425 EZtrak

F.O.B. Janesville, Wisconsin

498EM		Z425 EZtrak Residential Zero-Turn-Radius Mower with 54 In. Edge Deck, California Model	3,999.00

ATTACHMENTS FOR FIELD CONVERSION

		Engine:	
	AM123168	Spark Arrestor Kit	See Parts
		Material Collection System Hoppers:	
	BM23634	6.5 Bushel Hopper Assembly *Requires Power Flow Blower and Chute.*	480.43
	BM22797	6.5 Bushel hopper and chute Assembly *Fits 2010 and earlier models only (Serial #-099999)*	480.43
		Material Collection System Power Flow Blowers:	
	BM21873	HP Power Flow Blower Assembly for 54X Mower	558.54
		Material Collection System Power Flow/Rear Bagger Chutes:	
	BM21681	Power Flow Chute (7 bu.) *For 48C, 48X, 54C or 54X Series Blowers.*	114.49
		Miscellaneous:	
	AM36786	Battery Charger (110 Volt)	See Parts

Z425 EZtrak Residential Zero-Turn-Radius Mower with 54 In. Edge Deck, California Model

Continued

CODE	ATTACHMENT IDENTIFIER	DESCRIPTION	SUGGESTED LIST PRICE USD ($)
		ATTACHMENTS FOR FIELD CONVERSION Continued...	
	BM22568	EZtrak Special Edition Kit *Contains: bumper, rear hitch, & foot rest extensions.*	157.29
	AM137437	Foot Rest Extensions	See Parts
	BM22808	Headlight Kit *Fits 2010 and earlier models only (Serial # -100000).*	111.29
	BM23575	Headlight Kit *Fits 2011 and later models only (Serial # 100001-)*	128.40
	LG264	Home Maintenance Kit *(Serial # 040001-100000)*	See Parts
	LG268	Home Maintenance Kit *(Serial # 100001-)*	See Parts
	LG263	Home Maintenance Kit *(Serial # -040000)*	See Parts
	AM137380	Rear Bumper	See Parts
	AM137381	Rear Hitch	See Parts
		Mower Deck and Mower Deck Attachments:	
	BM23705	54 In Edge Deck *(Serial # 100001-)*	1,162.01
	BM23404	54 In. Edge Deck *(Serial # -060000 and 080001-100000)*	1,162.01
	AM133765	Anti-Blowout Kit (54C)	See Parts
	BM22970	Foot Lift Kit *Fits Serial #100001-.*	96.30
	BM22595	Front Roller Kit (54C) *Fits Z425 and Z445 (Serial # 010001-060000).*	48.16
	BM20985	Leaf Bagging Kit (54C/54X Mower) *Contains Three Bolt-on Deck Lips for Improved Bagging of Leaves.*	124.11
	AM130907	Mower Deck Leveling Gauge	See Parts
	BM20827	Mulch Kit (54C/54D/54X)	212.93
		Order Zone:	
	LP36199	15 Gallon Sprayer	In Catalog
	LP1500	Floor Mat	In Catalog
	LP1000	Grass Groomer - Lawn Striping Kit	In Catalog
	LP98107	Protective Cover	In Catalog
		Spanish North American Kit:	

Z425 EZtrak Residential Zero-Turn-Radius Mower with 54 In. Edge Deck, California Model

Continued

CODE	ATTACHMENT IDENTIFIER	DESCRIPTION	SUGGESTED LIST PRICE USD ($)
		ATTACHMENTS FOR FIELD CONVERSION Continued...	
	BM24474	Spanish Label & Owner's Manual Kit *For Model Year 2013 (Serial # 130001-).*	90.96
		EXTENDED WARRANTY - RESIDENTIAL OWNERS/USE	
		Visit http://www.JohnDeere.com/ServicePlans for more information on John Deere Service Contracts. May not be Available in Parts of the U.S., Not Available in Canada. Price may vary due to driving distance and/or time from machine to dealership location.	
		John Deere Extended Service Plan - 3-Year Option *3-year extended service plan. (1 year of extended service protection); 3-years of warranty transportation.*	249.99
		John Deere Extended Service Plan - 4-Year Option *4-year extended service plan. (2 years of extended service protection); 4-years of warranty transportation.*	289.99

Z445 EZtrak Residential Zero-Turn-Radius Mower with 48 In. Edge Deck - US & Canada

Equipment for Base Machine

ENGINE:
27 Horsepower *
Engine
V-Twin Design
Cast Iron Cylinder Liners
Full Pressure Lubrication with Replaceable Oil Filter
Air Cooled
EDGE CUTTING SYSTEM:
48 In. Side Discharge
.25 In. Cut Height Increments
1 to 4 In. Cutting Heights
4 Point Mounting System
Deck Transport Position
Mulch Capable
Wash Port
FUEL SYSTEM:
3.5 U.S. Gallon Fuel Tank Capacity
Gasoline
ELECTRICAL SYSTEM:
12 Volt Battery
195 CCA Battery
Hour Meter
Seat/PTO Interlock Switches
Electric Mower/Implement PTO Drive Clutch
TRANSMISSION:
Tuff-Torq TZT7-D
8.5 mph Forward, 4.0 mph Reverse Travel Speed
Twin Stick Speed & Direction Control Levers
Tow Valves
Zero Turning Radius
Easy Access Tracking Adjustment
TIRES:
13X5.0-6 Front Caster Wheel Tires
22X9.5-10 Rear Turf Drive Tires
SEAT:
17 In. High Back Seat with Spring Suspension and Adjustable Armrests
3 In. Seat Adjustment Travel
MISCELLANEOUS:
2 Cup Holders
Storage Compartment
Floor Mat
Flip up Foot Platform for Easy Service Access
15 Position Adjustable Motion Control Levers
Dry Weight--665 lbs.
*Engine HP is Provided by the Engine Manufacturer to be Used for Comparison Purposes Only, Actual Operating HP will be Less. Refer to the Engine Manufacturer's Web Site for Additional Information

CODE	ATTACHMENT IDENTIFIER	DESCRIPTION	SUGGESTED LIST PRICE USD ($)

Select One Code From Each Required Category

Z445 EZtrak

F.O.B. Janesville, Wisconsin

4998M		Z445 EZtrak Residential Zero-Turn-Radius Mower with 48 In. Edge Deck - US & Canada	4,699.00

DESTINATION

001A		United States and Canada	In Base Price
001C		Australia and New Zealand	Same Price
0245		Guam	Same Price
001D		All Other Countries	Same Price

ATTACHMENTS FOR FIELD CONVERSION

		Engine:	
	AM123168	Spark Arrestor Kit	See Parts
		Material Collection System Hoppers:	
	BM23634	6.5 Bushel Hopper Assembly *Requires Power Flow Blower and Chute.*	480.43
	BM22797	6.5 Bushel hopper and chute Assembly *Fits 2010 and earlier models only (Serial #-099999)*	480.43
		Material Collection System Power Flow Blowers:	

Z445 EZtrak Residential Zero-Turn-Radius Mower with 48 In. Edge Deck - US & Canada

Continued

CODE	ATTACHMENT IDENTIFIER	DESCRIPTION	SUGGESTED LIST PRICE USD ($)
		ATTACHMENTS FOR FIELD CONVERSION Continued...	
	BM21871	HP Power Flow Blower Assembly for 48X Mower	558.54
		Material Collection System Power Flow/Rear Bagger Chutes:	
	BM21681	Power Flow Chute (7 bu.) *For 48C, 48X, 54C or 54X Series Blowers.*	114.49
		Miscellaneous:	
	AM36786	Battery Charger (110 Volt)	See Parts
	BM22568	EZtrak Special Edition Kit *Contains: bumper, rear hitch, & foot rest extensions.*	157.29
	AM137437	Foot Rest Extensions	See Parts
	BM22808	Headlight Kit *Fits 2010 and earlier models only (Serial # -100000).*	111.29
	BM23575	Headlight Kit *Fits 2011 and later models only (Serial # 100001-)*	128.40
	LG249	Home Maintenance Kit *(Serial # -100000)*	See Parts
	LG269	Home Maintenance Kit *(Serial # 100001-)*	See Parts
	AM137380	Rear Bumper	See Parts
	AM137381	Rear Hitch	See Parts
		Mower Deck and Mower Deck Attachments:	
	BM23703	48 In Edge Deck *(Serial # 100001-)*	973.70
	BM23407	48 In. Edge Deck *(Serial # -100000)*	973.70
	AM133764	Anti-Blowout Kit (48C)	See Parts
	BM22970	Foot Lift Kit *Fits Serial #100001-.*	96.30
	BM22596	Front Roller Kit (48C) *Fits Z425 and Z445 (Serial # 010001-).*	55.64
	BM19894	Leaf Bagging Kit (48C/48X Mower) *Contains Three Bolt-on Deck Lips for Improved Bagging of Leaves.*	99.51
	AM130907	Mower Deck Leveling Gauge	See Parts
	BM20007	Mulch Kit (48C/48X)	157.29
		Order Zone:	
	LP36199	15 Gallon Sprayer	In Catalog
	LP1500	Floor Mat	In Catalog

Z445 EZtrak Residential Zero-Turn-Radius Mower with 48 In. Edge Deck - US & Canada

Continued

CODE	ATTACHMENT IDENTIFIER	DESCRIPTION	SUGGESTED LIST PRICE USD ($)
		ATTACHMENTS FOR FIELD CONVERSION Continued...	
	LP1000	Grass Groomer - Lawn Striping Kit	In Catalog
	LP98107	Protective Cover	In Catalog
		Spanish North American Kit:	
	BM24474	Spanish Label & Owner's Manual Kit *For Model Year 2013 (Serial # 130001-).*	90.96
		EXTENDED WARRANTY - RESIDENTIAL OWNERS/USE	
		Visit http://www.JohnDeere.com/ServicePlans for more information on John Deere Service Contracts. May not be Available in Parts of the U.S., Not Available in Canada. Price may vary due to driving distance and/or time from machine to dealership location.	
		John Deere Extended Service Plan - 5-Year Option *5-year extended service plan. (1- year of extended service protection); 5-years of warranty transportation.*	399.99
		John Deere Extended Service Plan - 6-Year Option *6-year extended service plan. (2- years of extended service protection); 6-years of warranty transportation.*	529.99

Z445 EZtrak Residential Zero-Turn-Radius Mower with 54 In. Edge Deck - US & Canada

Equipment for Base Machine

ENGINE:
27 Horsepower *
V-Twin Design
Cast Iron Cylinder Liners
Full Pressure Lubrication with Replaceable Oil Filter
Air Cooled
EDGE CUTTING SYSTEM:
54 In. Side Discharge
.25 In. Cut Height Increments
1 to 4 In. Cutting Heights
4 Point Mounting System
Deck Transport Position
Mulch Capable
FUEL SYSTEM:
3.5 U.S. Gallon Fuel Tank Capacity
Gasoline
ELECTRICAL SYSTEM:
12 Volt Battery
195 CCA Battery
Hour Meter
Seat/PTO Interlock Switches
Electric Mower/Implement PTO Drive Clutch
AUTOMATIC TRANSMISSION:
Tuff-Torq TZT7-D
8.5 mph Forward, 4.0 mph Reverse Travel Speed
Twin Stick Speed & Direction Control Levers
Tow Valve
Zero Turning Radius
Easy Access Tracking Adjustment
TIRES:
13X5.0-6 Front Caster Wheel Tires
22X9.5-10 Rear Turf Drive Tires
SEAT:
17 In. High Back Seat with Spring Suspension and Adjustable Armrests
3 In. Seat Adjustment Travel
MISCELLANEOUS:
2 Cup Holders
Storage Compartment
Floor Mat
Flip up Foot Platform for Easy Service Access
15 Position Adjustable Motion Control Levers
Dry Weight--680 lbs.
*Engine HP is Provided by the Engine Manufacturer to be Used for Comparison Purposes Only, Actual Operating HP will be Less. Refer to the Engine Manufacturer's Web Site for Additional Information

CODE	ATTACHMENT IDENTIFIER	DESCRIPTION	SUGGESTED LIST PRICE USD ($)

Select One Code From Each Required Category

Z445 EZtrak

F.O.B. Janesville, Wisconsin

4999M	Z445 EZtrak Residential Zero-Turn-Radius Mower with 54 In. Edge Deck - US & Canada	4,999.00

DESTINATION

001A	United States and Canada	In Base Price
001C	Australia and New Zealand	Same Price
0195	Mexico	Same Price
0245	Guam	Same Price
001D	All Other Countries	Same Price

ATTACHMENTS FOR FIELD CONVERSION

	Engine:	
AM123168	Spark Arrestor Kit	See Parts
	Material Collection System Hoppers:	
BM23634	6.5 Bushel Hopper Assembly *Requires Power Flow Blower and Chute.*	480.43
BM22797	6.5 Bushel hopper and chute Assembly *Fits 2010 and earlier models only (Serial #-099999)*	480.43

Z445 EZtrak Residential Zero-Turn-Radius Mower with 54 In. Edge Deck - US & Canada

Continued

CODE	ATTACHMENT IDENTIFIER	DESCRIPTION	SUGGESTED LIST PRICE USD ($)
		ATTACHMENTS FOR FIELD CONVERSION Continued...	
		Material Collection System Power Flow Blowers:	
	BM21873	HP Power Flow Blower Assembly for 54X Mower	558.54
		Material Collection System Power Flow/Rear Bagger Chutes:	
	BM21681	Power Flow Chute (7 bu.) *For 48C, 48X, 54C or 54X Series Blowers.*	114.49
		Miscellaneous:	
	AM36786	Battery Charger (110 Volt)	See Parts
	BM22568	EZtrak Special Edition Kit *Contains: bumper, rear hitch, & foot rest extensions.*	157.29
	AM137437	Foot Rest Extensions	See Parts
	BM22808	Headlight Kit *Fits 2010 and earlier models only (Serial # -100000).*	111.29
	BM23575	Headlight Kit *Fits 2011 and later models only (Serial # 100001-)*	128.40
	LG249	Home Maintenance Kit *(Serial # -100000)*	See Parts
	LG269	Home Maintenance Kit *(Serial # 100001-)*	See Parts
	AM137380	Rear Bumper	See Parts
	AM137381	Rear Hitch	See Parts
		Mower Deck and Mower Deck Attachments:	
	BM23705	54 In Edge Deck *(Serial # 100001-)*	1,162.01
	BM23404	54 In. Edge Deck *(Serial # -060000 and 080001-100000)*	1,162.01
	AM133765	Anti-Blowout Kit (54C)	See Parts
	BM22809	Foot Lift Kit *Fits Serial # 060001-080000.*	87.74
	BM22970	Foot Lift Kit *Fits Serial #100001-.*	96.30
	BM22595	Front Roller Kit (54C) *Fits Z425 and Z445 (Serial # 010001-060000).*	48.16
	BM20985	Leaf Bagging Kit (54C/54X Mower) *Contains Three Bolt-on Deck Lips for Improved Bagging of Leaves.*	124.11
	AM130907	Mower Deck Leveling Gauge	See Parts
	BM20827	Mulch Kit (54C/54D/54X)	212.93

Z445 EZtrak Residential Zero-Turn-Radius Mower with 54 In. Edge Deck - US & Canada

Continued

CODE	ATTACHMENT IDENTIFIER	DESCRIPTION	SUGGESTED LIST PRICE USD ($)
		ATTACHMENTS FOR FIELD CONVERSION Continued...	
		Order Zone:	
	LP36199	15 Gallon Sprayer	In Catalog
	LP1500	Floor Mat	In Catalog
	LP1000	Grass Groomer - Lawn Striping Kit	In Catalog
	LP98107	Protective Cover	In Catalog
		Spanish North American Kit:	
	BM24474	Spanish Label & Owner's Manual Kit *For Model Year 2013 (Serial # 130001-).*	90.96
		EXTENDED WARRANTY - RESIDENTIAL OWNERS/USE	
		Visit http://www.JohnDeere.com/ServicePlans for more information on John Deere Service Contracts. May not be Available in Parts of the U.S., Not Available in Canada. Price may vary due to driving distance and/or time from machine to dealership location.	
		John Deere Extended Service Plan - 5-Year Option *5-year extended service plan. (1- year of extended service protection); 5-years of warranty transportation.*	399.99
		John Deere Extended Service Plan - 6-Year Option *6-year extended service plan. (2- years of extended service protection); 6-years of warranty transportation.*	529.99

Z465 EZtrak Residential Zero-Turn-Radius Mower with 62 In. Edge Deck - US & Canada

Equipment for Base Machine

ENGINE:
27 Horsepower *
V-Twin Design
Cast Iron Cylinder Liners
Full Pressure Lubrication with Replaceable Oil Filter
Air Cooled
EDGE CUTTING SYSTEM:
62 In. Side Discharge
.25 In. Cut Height Increments
1 to 4 In. Cutting Heights
4 Point Mounting System
Deck Transport Position
Mulch Capable
FUEL SYSTEM:
3.5 U.S. Gallon Fuel Tank Capacity
Gasoline
ELECTRICAL SYSTEM:
12 Volt Battery
195 CCA Battery
Hour Meter
Seat/PTO Interlock Switches
Electric Mower/Implement PTO Drive Clutch
TRANSMISSION:
Tuff-Torq TZT7-D
8.5 mph Forward, 4.0 mph Reverse Travel Speed
Twin Stick Speed & Direction Control Levers
Tow Valve
Zero Turning Radius
Easy Access Tracking Adjustment
TIRES:
13X5.0-6 Front Caster Wheel Tires
22X9.5-10 Rear Turf Drive Tires
SEAT:
17 In. High Back Seat with Spring Suspension and Adjustable Armrests
3 In. Seat Adjustment Travel
MISCELLANEOUS:
2 Cup Holders
Storage Compartment
Floor Mat
Flip up Foot Platform for Easy Service Access
15 Position Adjustable Motion Control Levers
*Engine HP is Provided by the Engine Manufacturer to be Used for Comparison Purposes Only, Actual Operating HP will be Less. Refer to the Engine Manufacturer's Web Site for Additional Information

CODE	ATTACHMENT IDENTIFIER	DESCRIPTION	SUGGESTED LIST PRICE USD ($)

Select One Code From Each Required Category

Z465 EZtrak

F.O.B. Janesville, Wisconsin

5415M	Z465 EZtrak Residential Zero-Turn-Radius Mower with 62 In. Edge Deck - US & Canada	5,499.00

DESTINATION

001A	United States and Canada	In Base Price
001C	Australia and New Zealand	Same Price
0245	Guam	Same Price
001D	All Other Countries	Same Price

ATTACHMENTS FOR FIELD CONVERSION

	Engine:	
AM123168	Spark Arrestor Kit	See Parts
	Miscellaneous:	
AM36786	Battery Charger (110 Volt)	See Parts
BM22568	EZtrak Special Edition Kit *Contains: bumper, rear hitch, & foot rest extensions.*	157.29
AM137437	Foot Rest Extensions	See Parts

Z465 EZtrak Residential Zero-Turn-Radius Mower with 62 In. Edge Deck - US & Canada

Continued

CODE	ATTACHMENT IDENTIFIER	DESCRIPTION	SUGGESTED LIST PRICE USD ($)
		ATTACHMENTS FOR FIELD CONVERSION Continued...	
	BM22808	Headlight Kit *Fits 2010 and earlier models only (Serial # -100000).*	111.29
	BM23575	Headlight Kit *Fits 2011 and later models only (Serial # 100001-)*	128.40
	LG249	Home Maintenance Kit *(Serial # -100000)*	See Parts
	LG269	Home Maintenance Kit *(Serial # 100001-)*	See Parts
	AM137380	Rear Bumper	See Parts
	AM137381	Rear Hitch	See Parts
		Mower Deck and Mower Deck Attachments:	
	AM133766	Anti-Blowout Kit (62C)	See Parts
	BM22809	Foot Lift Kit *Fits Serial # 060001-080000.*	87.74
	BM24243	Foot Lift Kit *(Serial # 080001-)*	88.81
	BM20986	Leaf Bagging Kit (62C/62X Mower)	138.03
	AM130907	Mower Deck Leveling Gauge	See Parts
	BM21890	Mulch Kit (62C/62D/62X)	233.26
		Order Zone:	
	LP36199	15 Gallon Sprayer	In Catalog
	LP1500	Floor Mat	In Catalog
	LP1000	Grass Groomer - Lawn Striping Kit	In Catalog
	LP98107	Protective Cover	In Catalog
		Spanish North American Kit:	
	BM24474	Spanish Label & Owner's Manual Kit *For Model Year 2013 (Serial # 130001-).*	90.96

EXTENDED WARRANTY - RESIDENTIAL OWNERS/USE

Visit http://www.JohnDeere.com/ServicePlans for more information on John Deere Service Contracts. May not be Available in Parts of the U.S., Not Available in Canada. Price may vary due to driving distance and/or time from machine to dealership location.

John Deere Extended Service Plan - 5-Year Option *5-year extended service plan. (1- year of extended service protection); 5-years of warranty transportation.*	399.99
John Deere Extended Service Plan - 6-Year Option	529.99

Z465 EZtrak Residential Zero-Turn-Radius Mower with 62 In. Edge Deck - US & Canada

Continued

CODE	ATTACHMENT IDENTIFIER	DESCRIPTION	SUGGESTED LIST PRICE USD ($)
		EXTENDED WARRANTY - RESIDENTIAL OWNERS/USE	
		Continued...	
		6-year extended service plan. (2- years of extended service protection);	
		6-years of warranty transportation.	

Z645 EZtrak Residential Zero-Turn-Radius Mower with 48 In. HC Deck - US & Canada

Equipment for Base Machine

ENGINE:
27 Horsepower *
V-Twin Design
Cast Iron Cylinder Liners
Full Pressure Lubrication with Replaceable Oil Filter
Air Cooled
EDGE CUTTING SYSTEM:
48 In. High Capacity, Side Discharge Mower Deck
.25 In. Cut Height Increments
1 to 4 In. Cutting Heights
Standard Foot Lift
4 Point Mounting System
Deck Transport Position
Mulch Capable
Wash Port
FUEL SYSTEM:
3.5 U.S. Gallon Fuel Tank Capacity
Gasoline
ELECTRICAL SYSTEM:
12 Volt Battery
195 CCA Battery
Hour Meter
Seat/PTO Interlock Switches
Electric Mower/Implement PTO Drive Clutch
TRANSMISSION:
Tuff-Torq TZT7-M
9.0 mph Forward, 4.5 mph Reverse Travel Speed
Twin Stick Speed & Direction Control Levers
Tow Valves
Zero Turning Radius
Easy Access Tracking Adjustment
TIRES:
13X6.50-6 Front Caster Wheel Tires
23X10.5-10 Rear Turf Drive Tires
SEAT:
21 In. High Back Seat with Suspension and Adjustable Armrests
3 In. Seat Adjustment Travel
MISCELLANEOUS:
2 Cup Holders
Storage Compartment
Floor Mat
Flip up Foot Platform for Easy Service Access
15 Position Adjustable Motion Control Levers
Dry Weight--750 lbs.
*Engine HP is Provided by the Engine Manufacturer to be Used for Comparison Purposes Only, Actual Operating HP will be Less. Refer to the Engine Manufacturer's Web Site for Additional Information

CODE	ATTACHMENT IDENTIFIER	DESCRIPTION	SUGGESTED LIST PRICE USD ($)

Select One Code From Each Required Category

Z645 EZtrak

F.O.B. Janesville, Wisconsin

4584M		Z645 EZtrak Residential Zero-Turn-Radius Mower with 48 In. HC Deck - US & Canada	5,999.00

DESTINATION

001A		United States and Canada	In Base Price
001C		Australia and New Zealand	Same Price
0245		Guam	Same Price
001D		All Other Countries	Same Price

ATTACHMENTS FOR FIELD CONVERSION

		Engine:	
	AM123168	Spark Arrestor Kit	See Parts
		Material Collection System Hoppers:	
	BM23634	6.5 Bushel Hopper Assembly *Requires Power Flow Blower and Chute.*	480.43

Z645 EZtrak Residential Zero-Turn-Radius Mower with 48 In. HC Deck - US & Canada
Continued

CODE	ATTACHMENT IDENTIFIER	DESCRIPTION	SUGGESTED LIST PRICE USD ($)
		ATTACHMENTS FOR FIELD CONVERSION Continued...	
		Material Collection System Power Flow Blowers:	
	BM23635	HP Power Flow Blower Assembly for 48HC and 54HC Mowers *Fits Z645 and Z655 models only (Serial # 120001-). Also requires Retrofit Power Flow Kit for model year 2011 Z645 and Z655 (Serial # 100001-120000). Not compatible with Z445/54HC.*	695.50
	BM24275	Retrofit Power Flow Kit for 48HC and 54HC Mowers *Required to install Power Flow on Model Year 2011 Z645 and Z655 (Serial # 100001-120000). Not compatible with Z445/54HC. For MY11 Z645 (Serial # 100001-120000) M164434 pulley must also be ordered.*	22.47
		Material Collection System Power Flow/Rear Bagger Chutes:	
	BM21681	Power Flow Chute (7 bu.) *For 48C, 48X, 54C or 54X Series Blowers.*	114.49
		Miscellaneous:	
	AM36786	Battery Charger (110 Volt)	See Parts
	BM22568	EZtrak Special Edition Kit *Contains: bumper, rear hitch, & foot rest extensions.*	157.29
	AM137437	Foot Rest Extensions	See Parts
	BM22808	Headlight Kit *Fits 2010 and earlier models only (Serial # -100000).*	111.29
	BM23575	Headlight Kit *Fits 2011 and later models only (Serial # 100001-)*	128.40
	LG269	Home Maintenance Kit *(Serial # 100001-)*	See Parts
	AM137380	Rear Bumper	See Parts
	AM137381	Rear Hitch	See Parts
		Mower Deck and Mower Deck Attachments:	
	BM23707	48HC In. Edge Deck *Fits Model Year 2011 (Serial # 100001-120000).*	1,637.10
	BM24034	48HC In. Edge Deck *Fits Model Year 2012 (Serial # 120001-130000).*	1,637.10
	BM24420	48HC In. Edge Deck *(Serial # 130001-)*	1,637.10
	AM130907	Mower Deck Leveling Gauge	See Parts
	BM23975	Mulch Kit (48HC)	227.91
		Order Zone:	
	LP36199	15 Gallon Sprayer	In Catalog
	LP1500	Floor Mat	In Catalog
	LP36265	Grass Groomer - Lawn Striping Kit	In Catalog

Z645 EZtrak Residential Zero-Turn-Radius Mower with 48 In. HC Deck - US & Canada

Continued

CODE	ATTACHMENT IDENTIFIER	DESCRIPTION	SUGGESTED LIST PRICE USD ($)
		ATTACHMENTS FOR FIELD CONVERSION Continued...	
	LP98107	Protective Cover	In Catalog
		Spanish North American Kit:	
	BM24474	Spanish Label & Owner's Manual Kit *For Model Year 2013 (Serial # 130001-).*	90.96
		EXTENDED WARRANTY - RESIDENTIAL OWNERS/USE	
		Visit http://www.JohnDeere.com/ServicePlans for more information on John Deere Service Contracts. May not be Available in Parts of the U.S., Not Available in Canada. Price may vary due to driving distance and/or time from machine to dealership location.	
		John Deere Extended Service Plan - 5-Year Option *5-year extended service plan. (1- year of extended service protection); 5-years of warranty transportation.*	499.99
		John Deere Extended Service Plan - 6-Year Option *6-year extended service plan. (2- years of extended service protection); 6-years of warranty transportation.*	629.99

Z645 EZtrak Residential Zero-Turn-Radius Mower with 48 In. HC Deck - California Model

Equipment for Base Machine

ENGINE:
27 Horsepower *
V-Twin Design
Cast Iron Cylinder Liners
Full Pressure Lubrication with Replaceable Oil Filter
Air Cooled
EDGE CUTTING SYSTEM:
48 In. High Capacity, Side Discharge Mower Deck
.25 In. Cut Height Increments
1 to 4 In. Cutting Heights
Standard Foot Lift
4 Point Mounting System
Deck Transport Position
Mulch Capable
Wash Port
FUEL SYSTEM:
3.5 U.S. Gallon Fuel Tank Capacity
Gasoline
ELECTRICAL SYSTEM:
12 Volt Battery
195 CCA Battery
Hour Meter
Seat/PTO Interlock Switches
Electric Mower/Implement PTO Drive Clutch
TRANSMISSION:
Tuff-Torq TZT7-M
9.0 mph Forward, 4.5 mph Reverse Travel Speed
Twin Stick Speed & Direction Control Levers
Tow Valves
Zero Turning Radius
Easy Access Tracking Adjustment
TIRES:
13X6.50-6 Front Caster Wheel Tires
23X10.5-10 Rear Turf Drive Tires
SEAT:
21 In. High Back Seat with Suspension and Adjustable Armrests
3 In. Seat Adjustment Travel
MISCELLANEOUS:
2 Cup Holders
Storage Compartment
Floor Mat
Flip up Foot Platform for Easy Service Access
15 Position Adjustable Motion Control Levers
Dry Weight--750 lbs.
*Engine HP is Provided by the Engine Manufacturer to be Used for Comparison Purposes Only,
Actual Operating HP will be less.
Actual Operating HP will be Less. Refer to the Engine Manufacturer's Web Site for Additional Information

CODE	ATTACHMENT IDENTIFIER	DESCRIPTION	SUGGESTED LIST PRICE USD ($)

Select One Code From Each Required Category

Z645 EZtrak

F.O.B. Janesville, Wisconsin

4585M		Z645 EZtrak Residential Zero-Turn-Radius Mower with 48 In. HC Deck - California Model	5,999.00

ATTACHMENTS FOR FIELD CONVERSION

		Engine:	
	AM123168	Spark Arrestor Kit	See Parts
		Material Collection System Hoppers:	
	BM23634	6.5 Bushel Hopper Assembly *Requires Power Flow Blower and Chute.*	480.43
		Material Collection System Power Flow Blowers:	
	BM23635	HP Power Flow Blower Assembly for 48HC and 54HC Mowers *Fits Z645 and Z655 models only (Serial # 120001-). Also requires Retrofit Power Flow Kit for model year 2011 Z645 and Z655 (Serial # 100001-120000). Not compatible with Z445/54HC.*	695.50
	BM24275	Retrofit Power Flow Kit for 48HC and 54HC Mowers *Required to install Power Flow on Model Year 2011 Z645 and Z655 (Serial # 100001-120000). Not compatible with Z445/54HC. For MY11 Z645 (Serial # 100001-120000) M164434 pulley must also be ordered.*	22.47

Z645 EZtrak Residential Zero-Turn-Radius Mower with 48 In. HC Deck - California Model

Continued

CODE	ATTACHMENT IDENTIFIER	DESCRIPTION	SUGGESTED LIST PRICE USD ($)
		ATTACHMENTS FOR FIELD CONVERSION Continued...	
		Material Collection System Power Flow/Rear Bagger Chutes:	
	BM21681	Power Flow Chute (7 bu.) *For 48C, 48X, 54C or 54X Series Blowers.*	114.49
		Miscellaneous:	
	AM36786	Battery Charger (110 Volt)	See Parts
	BM22568	EZtrak Special Edition Kit *Contains: bumper, rear hitch, & foot rest extensions.*	157.29
	AM137437	Foot Rest Extensions	See Parts
	BM22808	Headlight Kit *Fits 2010 and earlier models only (Serial # -100000).*	111.29
	BM23575	Headlight Kit *Fits 2011 and later models only (Serial # 100001-)*	128.40
	LG269	Home Maintenance Kit *(Serial # 100001-)*	See Parts
	AM137380	Rear Bumper	See Parts
	AM137381	Rear Hitch	See Parts
		Mower Deck and Mower Deck Attachments:	
	BM23707	48HC In. Edge Deck *Fits Model Year 2011 (Serial # 100001-120000).*	1,637.10
	BM24034	48HC In. Edge Deck *Fits Model Year 2012 (Serial # 120001-130000).*	1,637.10
	BM24420	48HC In. Edge Deck *(Serial # 130001-)*	1,637.10
	AM130907	Mower Deck Leveling Gauge	See Parts
	BM23975	Mulch Kit (48HC)	227.91
		Order Zone:	
	LP36199	15 Gallon Sprayer	In Catalog
	LP1500	Floor Mat	In Catalog
	LP36265	Grass Groomer - Lawn Striping Kit	In Catalog
	LP98107	Protective Cover	In Catalog
		Spanish North American Kit:	
	BM24474	Spanish Label & Owner's Manual Kit *For Model Year 2013 (Serial # 130001-).*	90.96

EXTENDED WARRANTY - RESIDENTIAL OWNERS/USE

Visit http://www.JohnDeere.com/ServicePlans for more information on John Deere Service Contracts. May not be Available in Parts of the U.S., Not

Z645 EZtrak Residential Zero-Turn-Radius Mower with 48 In. HC Deck - California Model

Continued

CODE	ATTACHMENT IDENTIFIER	DESCRIPTION	SUGGESTED LIST PRICE USD ($)
		EXTENDED WARRANTY - RESIDENTIAL OWNERS/USE	
		Continued...	
		Available in Canada. Price may vary due to driving distance and/or time from machine to dealership location.	
		John Deere Extended Service Plan - 5-Year Option *5-year extended service plan. (1- year of extended service protection); 5-years of warranty transportation.*	499.99
		John Deere Extended Service Plan - 6-Year Option *6-year extended service plan. (2- years of extended service protection); 6-years of warranty transportation.*	629.99

Z655 EZtrak Residential Zero-Turn-Radius Mower with 54 In. HC Deck - US & Canada

Equipment for Base Machine

ENGINE:
27 Horsepower *
V-Twin Design
Cast Iron Cylinder Liners
Full Pressure Lubrication with Replaceable Oil Filter
Air Cooled
EDGE CUTTING SYSTEM:
54In. High Capacity, Side Discharge Mower Deck
.25 In. Cut Height Increments
1 to 4 In. Cutting Heights
Standard Foot Lift
4 Point Mounting System
Deck Transport Position
Mulch Capable
Wash Port
FUEL SYSTEM:
3.5 U.S. Gallon Fuel Tank Capacity
Gasoline
ELECTRICAL SYSTEM:
12 Volt Battery
195 CCA Battery
Hour Meter
Seat/PTO Interlock Switches
Electric Mower/Implement PTO Drive Clutch
TRANSMISSION:
Tuff-Torq TZT7-M
9.0 mph Forward, 4.5 mph Reverse Travel Speed
Twin Stick Speed & Direction Control Levers
Tow Valves
Zero Turning Radius
Easy Access Tracking Adjustment
TIRES:
13X6.50-6 Front Caster Wheel Tires
23X10.5-10 Rear Turf Drive Tires
SEAT:
21 In. High Back Seat with Suspension and Adjustable Armrests
3 In. Seat Adjustment Travel
MISCELLANEOUS:
2 Cup Holders
Storage Compartment
Floor Mat
Flip up Foot Platform for Easy Service Access
15 Position Adjustable Motion Control Levers
Dry Weight--750 lbs.
*Engine HP is Provided by the Engine Manufacturer to be Used for Comparison Purposes Only, Actual Operating HP will be Less. Refer to the Engine Manufacturer's Web Site for Additional Information.

CODE	ATTACHMENT IDENTIFIER	DESCRIPTION	SUGGESTED LIST PRICE USD ($)

Select One Code From Each Required Category

Z655 EZtrak

F.O.B. Janesville, Wisconsin

4592M		Z655 EZtrak Residential Zero-Turn-Radius Mower with 54 In. HC Deck - US & Canada	6,149.00

DESTINATION

001A		United States and Canada	In Base Price
001C		Australia and New Zealand	Same Price
0245		Guam	Same Price
001D		All Other Countries	Same Price

ATTACHMENTS FOR FIELD CONVERSION

		Engine:	
	AM123168	Spark Arrestor Kit	See Parts
		Material Collection System Hoppers:	
	BM23634	6.5 Bushel Hopper Assembly *Requires Power Flow Blower and Chute.*	480.43

Z655 EZtrak Residential Zero-Turn-Radius Mower with 54 In. HC Deck - US & Canada
Continued

CODE	ATTACHMENT IDENTIFIER	DESCRIPTION	SUGGESTED LIST PRICE USD ($)
		ATTACHMENTS FOR FIELD CONVERSION Continued...	
		Material Collection System Power Flow Blowers:	
	BM23635	HP Power Flow Blower Assembly for 48HC and 54HC Mowers *Fits Z645 and Z655 models only (Serial # 120001-). Also requires Retrofit Power Flow Kit for model year 2011 Z645 and Z655 (Serial # 100001-120000). Not compatible with Z445/54HC.*	695.50
	BM24275	Retrofit Power Flow Kit for 48HC and 54HC Mowers *Required to install Power Flow on Model Year 2011 Z645 and Z655 (Serial # 100001-120000). Not compatible with Z445/54HC.*	22.47
		Material Collection System Power Flow/Rear Bagger Chutes:	
	BM21681	Power Flow Chute (7 bu.) *For 48C, 48X, 54C or 54X Series Blowers.*	114.49
		Miscellaneous:	
	AM36786	Battery Charger (110 Volt)	See Parts
	BM22568	EZtrak Special Edition Kit *Contains: bumper, rear hitch, & foot rest extensions.*	157.29
	AM137437	Foot Rest Extensions	See Parts
	BM22808	Headlight Kit *Fits 2010 and earlier models only (Serial # -100000).*	111.29
	BM23575	Headlight Kit *Fits 2011 and later models only (Serial # 100001-)*	128.40
	LG269	Home Maintenance Kit *(Serial # 100001-)*	See Parts
	AM137380	Rear Bumper	See Parts
	AM137381	Rear Hitch	See Parts
		Mower Deck and Mower Deck Attachments:	
	BM23706	54HC In. Edge Deck *Fits Model Year 2011 (Serial # 100001-120000).*	1,808.30
	BM24035	54HC In. Edge Deck *Fits Model Year 2012 (Serial # 120001-).*	1,808.30
	BM24421	54HC In. Edge Deck *(Serial # 130001-)*	1,808.30
	BM23977	54HC Mulch Kit	227.91
	AM130907	Mower Deck Leveling Gauge	See Parts
		Order Zone:	
	LP36199	15 Gallon Sprayer	In Catalog
	LP1500	Floor Mat	In Catalog
	LP36265	Grass Groomer - Lawn Striping Kit	In Catalog

Z655 EZtrak Residential Zero-Turn-Radius Mower with 54 In. HC Deck - US & Canada
Continued

CODE	ATTACHMENT IDENTIFIER	DESCRIPTION	SUGGESTED LIST PRICE USD ($)
		ATTACHMENTS FOR FIELD CONVERSION Continued...	
	LP98107	Protective Cover	In Catalog
		Spanish North American Kit:	
	BM24474	Spanish Label & Owner's Manual Kit *For Model Year 2013 (Serial # 130001-).*	90.96
		EXTENDED WARRANTY - RESIDENTIAL OWNERS/USE	
		Visit http://www.JohnDeere.com/ServicePlans for more information on John Deere Service Contracts. May not be Available in Parts of the U.S., Not Available in Canada. Price may vary due to driving distance and/or time from machine to dealership location.	
		John Deere Extended Service Plan - 5-Year Option *5-year extended service plan. (1- year of extended service protection); 5-years of warranty transportation.*	499.99
		John Deere Extended Service Plan - 6-Year Option *6-year extended service plan. (2- years of extended service protection); 6-years of warranty transportation.*	629.99

Z665 EZtrak Residential Zero-Turn-Radius Mower with 60 In. HC Deck - US & Canada

Equipment for Base Machine

ENGINE:
27 Horsepower *
V-Twin Design
Cast Iron Cylinder Liners
Full Pressure Lubrication with Replaceable Oil Filter
Air Cooled
EDGE CUTTING SYSTEM:
60 In. High Capacity, Side Discharge Mower Deck
.25 In. Cut Height Increments
1 to 4 In. Cutting Heights
Standard Foot Lift
4 Point Mounting System
Deck Transport Position
Mulch Capable
Wash Port
FUEL SYSTEM:
3.5 U.S. Gallon Fuel Tank Capacity
Gasoline
ELECTRICAL SYSTEM:
12 Volt Battery
195 CCA Battery
Hour Meter
Seat/PTO Interlock Switches
Electric Mower/Implement PTO Drive Clutch
TRANSMISSION:
Tuff-Torq TZT7-M
9.0 mph Forward, 4.5 mph Reverse Travel Speed
Twin Stick Speed & Direction Control Levers
Tow Valve
Zero Turning Radius
Easy Access Tracking Adjustment
TIRES:
13X6.50-6 Front Caster Wheel Tires
23X10.5-10 Rear Turf Drive Tires
SEAT:
21 In. High Back Seat with Suspension and Adjustable Armrests
3 In. Seat Adjustment Travel
MISCELLANEOUS:
2 Cup Holders
Storage Compartment
Floor Mat
Flip up Foot Platform for Easy Service Access
15 Position Adjustable Motion Control Levers
Dry Weight--750 lbs.
*Engine HP is Provided by the Engine Manufacturer to be Used for Comparison Purposes Only, Actual Operating HP will be Less. Refer to the Engine Manufacturer's Web Site for Additional Information

CODE	ATTACHMENT IDENTIFIER	DESCRIPTION	SUGGESTED LIST PRICE USD ($)

Select One Code From Each Required Category

Z665 EZtrak

F.O.B. Janesville, Wisconsin

4602M		Z665 EZtrak Residential Zero-Turn-Radius Mower with 60 In. HC Deck - US & Canada	6,299.00

DESTINATION

001A		United States and Canada	In Base Price
001C		Australia and New Zealand	Same Price
0245		Guam	Same Price
001D		All Other Countries	Same Price

ATTACHMENTS FOR FIELD CONVERSION

		Engine:	
	AM123168	Spark Arrestor Kit	See Parts
		Miscellaneous:	
	AM36786	Battery Charger (110 Volt)	See Parts
	BM22568	EZtrak Special Edition Kit *Contains: bumper, rear hitch, & foot rest extensions.*	157.29
	AM137437	Foot Rest Extensions	See Parts

Z665 EZtrak Residential Zero-Turn-Radius Mower with 60 In. HC Deck - US & Canada
Continued

CODE	ATTACHMENT IDENTIFIER	DESCRIPTION	SUGGESTED LIST PRICE USD ($)
		ATTACHMENTS FOR FIELD CONVERSION Continued...	
	BM22808	Headlight Kit *Fits 2010 and earlier models only (Serial # -100000).*	111.29
	BM23575	Headlight Kit *Fits 2011 and later models only (Serial # 100001-)*	128.40
	LG269	Home Maintenance Kit *(Serial # 100001-)*	See Parts
	AM137380	Rear Bumper	See Parts
	AM137381	Rear Hitch	See Parts
		Mower Deck and Mower Deck Attachments:	
	BM24036	60HC In. Edge Deck *(Serial # 120001-130000)*	1,979.50
	BM24422	60HC In. Edge Deck *(Serial # 130001-)*	1,979.50
	BM23978	60HC Mulch Kit	238.61
	AM130907	Mower Deck Leveling Gauge	See Parts
		Order Zone:	
	LP36199	15 Gallon Sprayer	In Catalog
	LP1500	Floor Mat	In Catalog
	LP36265	Grass Groomer - Lawn Striping Kit	In Catalog
	LP98107	Protective Cover	In Catalog
		Spanish North American Kit:	
	BM24474	Spanish Label & Owner's Manual Kit *For Model Year 2013 (Serial # 130001-).*	90.96

EXTENDED WARRANTY - RESIDENTIAL OWNERS/USE

Visit http://www.JohnDeere.com/ServicePlans for more information on John Deere Service Contracts. May not be Available in Parts of the U.S., Not Available in Canada. Price may vary due to driving distance and/or time from machine to dealership location.

John Deere Extended Service Plan - 5-Year Option *5-year extended service plan. (1- year of extended service protection); 5-years of warranty transportation.*	499.99
John Deere Extended Service Plan - 6-Year Option *6-year extended service plan. (2- years of extended service protection); 6-years of warranty transportation.*	629.99

D105 Lawn Tractor

Equipment for Base Machine

ENGINE:
*17.5 HP
Overhead Valves
Transmission - CVT
Single Clutch and Brake Pedal
ELECTRICAL:
Regulated Charging System
9 Amp
OPERATOR STATION:
4-Position Key Switch
with Position for Headlight
Control
Reverse Implement Option (RIO)
STEERING:
Sector & Pinion with Dual
Drag Links
18 In. Turning Radius
THE EDGE CUTTING SYSTEM:
42 In. Cutting Width
1-4 In. Cutting Heights in
1/4 In. Increments
Two Gauge Wheels
MODELS FEATURE:
Cast-Iron Front Axle
Full-Length Welded Steel
Frame
Cargo Mount System
Fuel Tank Capacity
2.4 U.S. Gallons
Fuel Gauge
Integrated Cupholder
WHEELS AND TIRES:
Front Tires:
15x6.00-6 In.
Rear Tires:
20x8.00-8 In.

CODE	ATTACHMENT IDENTIFIER	DESCRIPTION	SUGGESTED LIST PRICE USD ($)

Select One Code From Each Required Category

D105 Lawn Tractor

F.O.B. Greenville, TN

1010GX		D105 Lawn Tractor	1,499.00

ATTACHMENTS FOR FIELD CONVERSION

		Material Collection System:	
	BM21888	6.5 Bushel Hopper and Chute for 100 Series, 42 In. *Front Ballast is Recommended when Bagging, Especially on Hills or Inclines.*	349.00
		Miscellaneous:	
	BG20020	46 In. Snow Blade *Requires Rear Ballast and Tire Chains.*	323.14
	M88984	Drift Blade	See Parts
	BG20436	Front Bumper	74.90
	TY15959	Rear Tire Chain Kit (Pair) for 20x8-8	See Parts
	AM122263	Skid Shoe, Heavy Duty Left Hand (1) *For Snow Blower.*	See Parts
	AM122264	Skid Shoe, Heavy Duty Right Hand (1) *For Snow Blower.*	See Parts
	BG20260	Sun Canopy	99.00
	M150361	Wheel Cover, 6 In. (Chrome)	See Parts
	M118001	Wheel Cover, 6 In. (Yellow Plastic)	See Parts
		Mower Deck and Mower Deck Attachments:	
	GY00115	Mulch Cover (42 In.)	See Parts
	BM21816	Mulch Kit (42 In. or 42X)	99.51

D105 Lawn Tractor
Continued

CODE	ATTACHMENT IDENTIFIER	DESCRIPTION	SUGGESTED LIST PRICE USD ($)
		ATTACHMENTS FOR FIELD CONVERSION Continued...	
		Order Zone:	
	LPJD100	Bucket Holder (Single)	In Catalog
	LP93617	Riding Mower Deluxe Cover (M)	In Catalog
	LP93917	Riding Mower Standard Cover	In Catalog
	LP31342	Snow Cab 2011 D Series Tractors	In Catalog
	LP21790	Snow Cab 2010 and previous 100 Series Tractors	In Catalog
		Spanish North American Kit:	
	BG20621	Spanish North American Label & Decal Kit	16.06
		Weights:	
	R66949	Quik-Tatch Weight, 42 Lb.	62.06
	BG20029	Quik-Tatch Weight, 42 Lb. (Boxed) *Two Required.*	63.13
	BG20627	Rear Weight Bracket *One Rear Weight Bracket is Required.*	54.57
	BM17962	Wheel Weight (Cast Iron, Front, 34 Lb., 5 or 6 in wheel) *Requires BM17978 Mounting Hardware.*	133.76
	BM17978	Wheel Weight Mounting Hardware (1) for Attaching Front Wheel Weight	10.70
		SERVICE CONTRACTS - RESIDENTIAL OWNERS/USE	
		Visit http://www.JohnDeere.com/ServicePlans for more information on John Deere Service Contracts. May not be Available in Parts of the U.S., Not Available in Canada. Price may vary due to driving distance and/or time from machine to dealership location.	
		John Deere Extended Service Plan - 3-Year Option *3-year extended service plan. (1 year of extended service protection); 3-years of warranty transportation.*	199.99
		John Deere Extended Service Plan - 4-Year Option *4-year extended service plan. (2 years of extended service protection); 4-years of warranty transportation.*	249.99

D110 Lawn Tractor

Equipment for Base Machine

ENGINE:
*19.5 HP
Overhead Valves
Full Pressure Lubrication
Oil Filter
TRANSMISSON - AUTOMATIC:
Tuff Torq, Hydrostatic,
Infinitely Variable Speed
Two Pedal Foot Control
ELECTRICAL:
Regulated Charging System
9 Amp
OPERATOR STATION:
4-Position Key Switch
with Position for Headlight
Control
Reverse Implement Option (RIO)

STEERING:
Sector & Pinion with Dual
Drag Links
18 In. Turning Radius
THE EDGE CUTTING SYSTEM:
42 In. Cutting Width
1-4 In. Cutting Heights in
1/4 In. Increments
Two Gauge Wheels
MODELS FEATURE:
Cast-Iron Front Axle
Full-Length Welded Steel
Frame
Cargo Mount System
Fuel Tank Capacity
2.4 U.S. Gallons
Fuel Gauge

Integrated Cupholder
WHEELS AND TIRES:
Front Tires:
15x6.00-6 In.
Rear Tires:
20x8.00-8 In.

CODE	ATTACHMENT IDENTIFIER	DESCRIPTION	SUGGESTED LIST PRICE USD ($)
		Select One Code From Each Required Category	
		D110 Lawn Tractor	
		F.O.B. Greenville, TN	
0810GX		D110 Lawn Tractor	1,699.00
		ATTACHMENTS FOR FIELD CONVERSION	
		Material Collection System:	
	BM21888	6.5 Bushel Hopper and Chute for 100 Series, 42 In. *Front Ballast is Recommended when Bagging, Especially on Hills or Inclines.*	349.00
		Miscellaneous:	
	BG20020	46 In. Snow Blade *Requires Rear Ballast and Tire Chains.*	323.14
	M88984	Drift Blade	See Parts
	BG20436	Front Bumper	74.90
	TY15959	Rear Tire Chain Kit (Pair) for 20x8-8	See Parts
	AM122263	Skid Shoe, Heavy Duty Left Hand (1) *For Snow Blower.*	See Parts
	AM122264	Skid Shoe, Heavy Duty Right Hand (1) *For Snow Blower.*	See Parts
	BG20260	Sun Canopy	99.00
	M150361	Wheel Cover, 6 In. (Chrome)	See Parts
	M118001	Wheel Cover, 6 In. (Yellow Plastic)	See Parts
		Mower Deck and Mower Deck Attachments:	
	BG20705	42 In. Complete Mower Deck	642.00

D110 Lawn Tractor

Continued

CODE	ATTACHMENT IDENTIFIER	DESCRIPTION	SUGGESTED LIST PRICE USD ($)
		ATTACHMENTS FOR FIELD CONVERSION Continued...	
	GY00115	Mulch Cover (42 In.)	See Parts
	BM21816	Mulch Kit (42 In. or 42X)	99.51
		Order Zone:	
	LPJD100	Bucket Holder (Single)	In Catalog
	LP93617	Riding Mower Deluxe Cover (M)	In Catalog
	LP93917	Riding Mower Standard Cover	In Catalog
	LP31342	Snow Cab 2011 D Series Tractors	In Catalog
	LP21790	Snow Cab 2010 and previous 100 Series Tractors	In Catalog
		Spanish North American Kit:	
	BG20621	Spanish North American Label & Decal Kit	16.06
		Weights:	
	R66949	Quik-Tatch Weight, 42 Lb.	62.06
	BG20029	Quik-Tatch Weight, 42 Lb. (Boxed) *Two Required.*	63.13
	BG20627	Rear Weight Bracket *One Rear Weight Bracket is Required.*	54.57
	BM17962	Wheel Weight (Cast Iron, Front, 34 Lb., 5 or 6 in wheel) *Requires BM17978 Mounting Hardware.*	133.76
	BM17978	Wheel Weight Mounting Hardware (1) for Attaching Front Wheel Weight	10.70

SERVICE CONTRACTS - RESIDENTIAL OWNERS/USE

Visit http://www.JohnDeere.com/ServicePlans for more information on John Deere Service Contracts. May not be Available in Parts of the U.S., Not Available in Canada. Price may vary due to driving distance and/or time from machine to dealership location.

	John Deere Extended Service Plan - 3-Year Option *3-year extended service plan. (1 year of extended service protection); 3-years of warranty transportation.*	199.99
	John Deere Extended Service Plan - 4-Year Option *4-year extended service plan. (2 years of extended service protection); 4-years of warranty transportation.*	249.99

D120 Lawn Tractor

Equipment for Base Machine

ENGINE:
*21 HP
Overhead Valves
Full Pressure Lubrication
Oil Filter
TRANSMISSON - AUTOMATIC:
Tuff Torq, Hydrostatic,
Infinitely Variable Speed
Two Pedal Foot Control
ELECTRICAL:
Regulated Charging System
9 Amp
OPERATOR STATION:
4-Position Key Switch
with Position for Headlight
Control
Hourmeter with Service Reminder
Reverse Implement Option (RIO)
STEERING:
Sector & Pinion with Dual
Drag Links
18 In. Turning Radius
THE EDGE CUTTING SYSTEM:
42 In. Cutting Width
1-4 In. Cutting Heights in
1/4 In. Increments
Two Gauge Wheels
MODELS FEATURE:
Cast-Iron Front Axle
Full-Length Welded Steel
Frame
Cargo Mount System
Fuel Tank Capacity
2.4 U.S. Gallons
Fuel Gauge
Cargo Door
Integrated Cupholder
WHEELS AND TIRES:
Front Tires:
15x6.00-6 In.
Rear Tires:
20x8.00-8 In.

CODE	ATTACHMENT IDENTIFIER	DESCRIPTION	SUGGESTED LIST PRICE USD ($)

Select One Code From Each Required Category

D120 Lawn Tractor

F.O.B. Greenville, TN

0820GX		D120 Lawn Tractor	1,799.00

ATTACHMENTS FOR FIELD CONVERSION

		Material Collection System:	
	BM21888	6.5 Bushel Hopper and Chute for 100 Series, 42 In. *Front Ballast is Recommended when Bagging, Especially on Hills or Inclines.*	349.00
		Miscellaneous:	
	BG20020	46 In. Snow Blade *Requires Rear Ballast and Tire Chains.*	323.14
	M88984	Drift Blade	See Parts
	BG20436	Front Bumper	74.90
	TY15959	Rear Tire Chain Kit (Pair) for 20x8-8	See Parts
	AM122263	Skid Shoe, Heavy Duty Left Hand (1) *For Snow Blower.*	See Parts
	AM122264	Skid Shoe, Heavy Duty Right Hand (1) *For Snow Blower.*	See Parts
	BG20260	Sun Canopy	99.00
	M150361	Wheel Cover, 6 In. (Chrome)	See Parts
	M118001	Wheel Cover, 6 In. (Yellow Plastic)	See Parts
		Mower Deck and Mower Deck Attachments:	
	BG20705	42 In. Complete Mower Deck	642.00

D120 Lawn Tractor

Continued

CODE	ATTACHMENT IDENTIFIER	DESCRIPTION	SUGGESTED LIST PRICE USD ($)
		ATTACHMENTS FOR FIELD CONVERSION Continued...	
	GY00115	Mulch Cover (42 In.)	See Parts
	BM21816	Mulch Kit (42 In. or 42X)	99.51
		Order Zone:	
	LPJD100	Bucket Holder (Single)	In Catalog
	LP93617	Riding Mower Deluxe Cover (M)	In Catalog
	LP93917	Riding Mower Standard Cover	In Catalog
	LP31342	Snow Cab 2011 D Series Tractors	In Catalog
	LP21790	Snow Cab 2010 and previous 100 Series Tractors	In Catalog
		Spanish North American Kit:	
	BG20621	Spanish North American Label & Decal Kit	16.06
		Weights:	
	R66949	Quik-Tatch Weight, 42 Lb.	62.06
	BG20029	Quik-Tatch Weight, 42 Lb. (Boxed) *Two Required.*	63.13
	BG20627	Rear Weight Bracket *One Rear Weight Bracket is Required.*	54.57
	BM17962	Wheel Weight (Cast Iron, Front, 34 Lb., 5 or 6 in wheel) *Requires BM17978 Mounting Hardware.*	133.76
	BM17978	Wheel Weight Mounting Hardware (1) for Attaching Front Wheel Weight	10.70

SERVICE CONTRACTS - RESIDENTIAL OWNERS/USE

Visit http://www.JohnDeere.com/ServicePlans for more information on John Deere Service Contracts. May not be Available in Parts of the U.S., Not Available in Canada. Price may vary due to driving distance and/or time from machine to dealership location.

	John Deere Extended Service Plan - 3-Year Option *3-year extended service plan. (1 year of extended service protection); 3-years of warranty transportation.*	199.99
	John Deere Extended Service Plan - 4-Year Option *4-year extended service plan. (2 years of extended service protection); 4-years of warranty transportation.*	249.99

D130 Lawn Tractor

Equipment for Base Machine

ENGINE:
*22 HP
V-Twin
Overhead Valves
Full Pressure Lubrication
Oil Filter
TRANSMISSON - AUTOMATIC:
Tuff Torq, Hydrostatic,
Infinitely Variable Speed
Two Pedal Foot Control
ELECTRICAL:
Regulated Charging System
9 Amp
OPERATOR STATION:
4-Position Key Switch
with Position for Headlight
Control
Hourmeter with Service Reminder
Reverse Implement Option (RIO)
STEERING:
Sector & Pinion with Dual
Drag Links
18 In. Turning Radius
THE EDGE CUTTING SYSTEM:
42 In. Cutting Width
1-4 In. Cutting Heights in
1/4 In. Increments
Two Gauge Wheels
MODELS FEATURE:
Cast-Iron Front Axle
Full-Length Welded Steel
Frame
Cargo Mount System
Fuel Tank Capacity
2.4 U.S. Gallons
Fuel Gauge
Cargo Door
Integrated Cupholder
WHEELS AND TIRES:
Front Tires:
15x6.00-6 In.
Rear Tires:
20x10.00-8 In.

CODE	ATTACHMENT IDENTIFIER	DESCRIPTION	SUGGESTED LIST PRICE USD ($)

Select One Code From Each Required Category

D130 Lawn Tractor

F.O.B. Greenville, TN

0830GX		D130 Lawn Tractor	1,899.00

ATTACHMENTS FOR FIELD CONVERSION

		Material Collection System:	
	BM21888	6.5 Bushel Hopper and Chute for 100 Series, 42 In. *Front Ballast is Recommended when Bagging, Especially on Hills or Inclines.*	349.00
		Miscellaneous:	
	BG20020	46 In. Snow Blade *Requires Rear Ballast and Tire Chains.*	323.14
	M88984	Drift Blade	See Parts
	AM122263	Skid Shoe, Heavy Duty Left Hand (1) *For Snow Blower.*	See Parts
	AM122264	Skid Shoe, Heavy Duty Right Hand (1) *For Snow Blower.*	See Parts
	BG20260	Sun Canopy	99.00
	M150361	Wheel Cover, 6 In. (Chrome)	See Parts
	M118001	Wheel Cover, 6 In. (Yellow Plastic)	See Parts
		Mower Deck and Mower Deck Attachments:	
	BG20705	42 In. Complete Mower Deck	642.00
	GY00115	Mulch Cover (42 In.)	See Parts

D130 Lawn Tractor
Continued

CODE	ATTACHMENT IDENTIFIER	DESCRIPTION	SUGGESTED LIST PRICE USD ($)
		ATTACHMENTS FOR FIELD CONVERSION Continued...	
	BM21816	Mulch Kit (42 In. or 42X)	99.51
		Order Zone:	
	LPJD100	Bucket Holder (Single)	In Catalog
	LP93617	Riding Mower Deluxe Cover (M)	In Catalog
	LP93917	Riding Mower Standard Cover	In Catalog
	LP31342	Snow Cab 2011 D Series Tractors	In Catalog
	LP21790	Snow Cab 2010 and previous 100 Series Tractors	In Catalog
		Seats / Wheels / Tires:	
	TY16200	Tire Chains (Pair) for 20x10-8, 20x10-10	See Parts
		Spanish North American Kit:	
	BG20621	Spanish North American Label & Decal Kit	16.06
		Weights:	
	R66949	Quik-Tatch Weight, 42 Lb.	62.06
	BG20029	Quik-Tatch Weight, 42 Lb. (Boxed) *Two Required.*	63.13
	BG20627	Rear Weight Bracket *One Rear Weight Bracket is Required.*	54.57
	BM17962	Wheel Weight (Cast Iron, Front, 34 Lb., 5 or 6 in wheel) *Requires BM17978 Mounting Hardware.*	133.76
	BM17978	Wheel Weight Mounting Hardware (1) for Attaching Front Wheel Weight	10.70
		SERVICE CONTRACTS - RESIDENTIAL OWNERS/USE	
		Visit http://www.JohnDeere.com/ServicePlans for more information on John Deere Service Contracts. May not be Available in Parts of the U.S., Not Available in Canada. Price may vary due to driving distance and/or time from machine to dealership location.	
		John Deere Extended Service Plan - 3-Year Option *3-year extended service plan. (1 year of extended service protection); 3-years of warranty transportation.*	199.99
		John Deere Extended Service Plan - 4-Year Option *4-year extended service plan. (2 years of extended service protection); 4-years of warranty transportation.*	249.99

D140 Lawn Tractor

Equipment for Base Machine

ENGINE:
*22 HP
V-Twin
Overhead Valves
Full Pressure Lubrication
Oil Filter
TRANSMISSON - AUTOMATIC:
Tuff Torq, Hydrostatic,
Infinitely Variable Speed
Two Pedal Foot Control
ELECTRICAL:
Regulated Charging System
9 Amp
OPERATOR STATION:
4-Position Key Switch
with Position for Headlight
Control
Hourmeter with Service Reminder
Reverse Implement Option (RIO)
STEERING:
Sector & Pinion with Dual
Drag Links
18 In. Turning Radius
THE EDGE CUTTING SYSTEM:
48 In. Cutting Width
1-4 In. Cutting Heights in
1/4 In. Increments
Four Gauge Wheels
MODELS FEATURE:
Cast-Iron Front Axle
Full-Length Welded Steel
Frame
Cargo Mount System
Fuel Tank Capacity
2.4 U.S. Gallons
Fuel Gauge
Cargo Door
Integrated Cupholder
WHEELS AND TIRES:
Front Tires:
15x6.00-6 In.
Rear Tires:
20x10-8 In

CODE	ATTACHMENT IDENTIFIER	DESCRIPTION	SUGGESTED LIST PRICE USD ($)

Select One Code From Each Required Category

D140 Lawn Tractor

F.O.B. Greenville, TN

0840GX		D140 Lawn Tractor	1,999.00

ATTACHMENTS FOR FIELD CONVERSION

		Material Collection System:	
	BM21889	6.5 Bushel Hopper and Chute for 100 Series, 48 In. *Front Ballast is Recommended when Bagging, Especially on Hills or Inclines.*	359.00
		Miscellaneous:	
	BG20020	46 In. Snow Blade *Requires Rear Ballast and Tire Chains.*	323.14
	M88984	Drift Blade	See Parts
	BG20436	Front Bumper	74.90
	AM122263	Skid Shoe, Heavy Duty Left Hand (1) *For Snow Blower.*	See Parts
	AM122264	Skid Shoe, Heavy Duty Right Hand (1) *For Snow Blower.*	See Parts
	BG20260	Sun Canopy	99.00
	M150361	Wheel Cover, 6 In. (Chrome)	See Parts
	M118001	Wheel Cover, 6 In. (Yellow Plastic)	See Parts
		Mower Deck and Mower Deck Attachments:	
	BG20706	48 In. Complete Mower Deck	930.90

D140 Lawn Tractor

Continued

CODE	ATTACHMENT IDENTIFIER	DESCRIPTION	SUGGESTED LIST PRICE USD ($)
		ATTACHMENTS FOR FIELD CONVERSION Continued...	
	BG20470	48" Mower Deck Blowout Kit	49.21
	GX21785	High Lift Bagging Blades for 48" Deck	See Parts
	GY20417	Mulch Cover (48 In.)	See Parts
		Order Zone:	
	LPJD100	Bucket Holder (Single)	In Catalog
	LP93617	Riding Mower Deluxe Cover (M)	In Catalog
	LP93917	Riding Mower Standard Cover	In Catalog
	LP31342	Snow Cab 2011 D Series Tractors	In Catalog
	LP21790	Snow Cab 2010 and previous 100 Series Tractors	In Catalog
		Seats / Wheels / Tires:	
	TY16200	Tire Chains (Pair) for 20x10-8, 20x10-10	See Parts
		Spanish North American Kit:	
	BG20621	Spanish North American Label & Decal Kit	16.06
		Weights:	
	R66949	Quik-Tatch Weight, 42 Lb.	62.06
	BG20029	Quik-Tatch Weight, 42 Lb. (Boxed) *Two Required.*	63.13
	BG20627	Rear Weight Bracket *One Rear Weight Bracket is Required.*	54.57
	BM17962	Wheel Weight (Cast Iron, Front, 34 Lb., 5 or 6 in wheel) *Requires BM17978 Mounting Hardware.*	133.76
	BM17978	Wheel Weight Mounting Hardware (1) for Attaching Front Wheel Weight	10.70

SERVICE CONTRACTS - RESIDENTIAL OWNERS/USE

Visit http://www.JohnDeere.com/ServicePlans for more information on John Deere Service Contracts. May not be Available in Parts of the U.S., Not Available in Canada. Price may vary due to driving distance and/or time from machine to dealership location.

John Deere Extended Service Plan - 3-Year Option *3-year extended service plan. (1 year of extended service protection); 3-years of warranty transportation.*	199.99
John Deere Extended Service Plan - 4-Year Option *4-year extended service plan. (2 years of extended service protection); 4-years of warranty transportation.*	249.99

D160 Lawn Tractor

Equipment for Base Machine

ENGINE:
*24 HP
V-Twin
Overhead Valves
Full Pressure Lubrication
Oil Filter
TRANSMISSON - AUTOMATIC:
Tuff Torq, Hydrostatic,
Infinitely Variable Speed
Two Pedal Foot Control
ELECTRICAL:
12 Volt Power Outlet
Regulated Charging System
16 Amp
OPERATOR STATION:
4-Position Key Switch
with Position for Headlight
Control
Hourmeter with Service Reminder
Reverse Implement Option (RIO)
STEERING:
Sector & Pinion with Dual
Drag Links
18 In. Turning Radius
THE EDGE CUTTING SYSTEM:
48 In. Cutting Width
1-4 In. Cutting Heights in
1/4 In. Increments
Four Gauge Wheels
MODELS FEATURE:
Cast-Iron Front Axle
Full-Length Welded Steel
Frame
Cargo Mount System
Fuel Tank Capacity
2.4 U.S. Gallons
Fuel Gauge
Cargo Door
Integrated Cupholder
WHEELS AND TIRES:
Front Tires:
16x6.5-8 In.
Rear Tires:
22x9.5-12 In.

CODE	ATTACHMENT IDENTIFIER	DESCRIPTION	SUGGESTED LIST PRICE USD ($)

Select One Code From Each Required Category

D160 Lawn Tractor

F.O.B. Greenville, TN

0870GX		D160 Lawn Tractor	2,599.00

ATTACHMENTS FOR FIELD CONVERSION

		Material Collection System:	
	BM21889	6.5 Bushel Hopper and Chute for 100 Series, 48 In. *Front Ballast is Recommended when Bagging, Especially on Hills or Inclines.*	359.00
		Miscellaneous:	
	BG20020	46 In. Snow Blade *Requires Rear Ballast and Tire Chains.*	323.14
	M88984	Drift Blade	See Parts
	TY25229	Rear Tire Chain Kit (Pair) for 22x9.5-12	See Parts
	AM122263	Skid Shoe, Heavy Duty Left Hand (1) *For Snow Blower.*	See Parts
	AM122264	Skid Shoe, Heavy Duty Right Hand (1) *For Snow Blower.*	See Parts
	BG20260	Sun Canopy	99.00
	M150364	Wheel Cover, 12 In. (Chrome)	See Parts
	M114663	Wheel Cover, 12 In. (Yellow Plastic)	See Parts
		Mower Deck and Mower Deck Attachments:	
	BG20706	48 In. Complete Mower Deck	930.90

D160 Lawn Tractor

Continued

CODE	ATTACHMENT IDENTIFIER	DESCRIPTION	SUGGESTED LIST PRICE USD ($)
		ATTACHMENTS FOR FIELD CONVERSION Continued...	
	BG20470	48" Mower Deck Blowout Kit	49.21
	GX21785	High Lift Bagging Blades for 48" Deck	See Parts
	GY20417	Mulch Cover (48 In.)	See Parts
		Order Zone:	
	LPJD100	Bucket Holder (Single)	In Catalog
	LP93617	Riding Mower Deluxe Cover (M)	In Catalog
	LP93917	Riding Mower Standard Cover	In Catalog
	LP31342	Snow Cab 2011 D Series Tractors	In Catalog
	LP21790	Snow Cab 2010 and previous 100 Series Tractors	In Catalog
		Spanish North American Kit:	
	BG20621	Spanish North American Label & Decal Kit	16.06
		Weights:	
	R66949	Quik-Tatch Weight, 42 Lb.	62.06
	BG20029	Quik-Tatch Weight, 42 Lb. (Boxed) *Two Required.*	63.13
	BG20627	Rear Weight Bracket *One Rear Weight Bracket is Required.*	54.57
	BM17962	Wheel Weight (Cast Iron, Front, 34 Lb., 5 or 6 in wheel) *Requires BM17978 Mounting Hardware.*	133.76

SERVICE CONTRACTS - RESIDENTIAL OWNERS/USE

Visit http://www.JohnDeere.com/ServicePlans for more information on John Deere Service Contracts. May not be Available in Parts of the U.S., Not Available in Canada. Price may vary due to driving distance and/or time from machine to dealership location.

	John Deere Extended Service Plan - 3-Year Option *3-year extended service plan. (1 year of extended service protection); 3-years of warranty transportation.*	199.99
	John Deere Extended Service Plan - 4-Year Option *4-year extended service plan. (2 years of extended service protection); 4-years of warranty transportation.*	249.99

D170 Lawn Tractor

Equipment for Base Machine

ENGINE:
26 HP
V-Twin
Overhead Valves
Full Pressure Lubrication
Oil Filter
TRANSMISSON - AUTOMATIC:
Tuff Torq, Hydrostatic,
Infinitely Variable Speed
Two Pedal Foot Control
ELECTRICAL:
12 Volt Power Outlet
Regulated Charging System
16 Amp
OPERATOR STATION:
4-Position Key Switch
with Position for Headlight
Control
Hourmeter with Service Reminder
Reverse Implement Option (RIO)
STEERING:
Sector & Pinion with Dual
Drag Links
18 In. Turning Radius
THE EDGE CUTTING SYSTEM:
54 In. Cutting Width
1-4 In. Cutting Heights in
1/4 In. Increments
Four Gauge Wheels with mid
deck nose roller
MODELS FEATURE:
Cast-Iron Front Axle
Full-Length Welded Steel
Frame
Cargo Mount System
Fuel Tank Capacity
2.4 U.S. Gallons
Fuel Gauge
Cargo Door
Integrated Cupholder
WHEELS AND TIRES:
Front Tires:
16x6.5-8 In.
Rear Tires:
22x9.5-12 In.

CODE	ATTACHMENT IDENTIFIER	DESCRIPTION	SUGGESTED LIST PRICE USD ($)

Select One Code From Each Required Category

D170 Lawn Tractor

F.O.B. Greenville, TN

0880GX		D170 Lawn Tractor	2,799.00

ATTACHMENTS FOR FIELD CONVERSION

		Material Collection System Hoppers:	
	BM21376	6.5 Bushel Hopper, Chute and Power Flow for 100 Series and G110, 54 In. *Front Ballast is Recommended when Bagging, Especially on Hills or Inclines.*	790.73
		Miscellaneous:	
	BG20020	46 In. Snow Blade *Requires Rear Ballast and Tire Chains.*	323.14
	M88984	Drift Blade	See Parts
	TY25229	Rear Tire Chain Kit (Pair) for 22x9.5-12	See Parts
	AM122263	Skid Shoe, Heavy Duty Left Hand (1) *For Snow Blower.*	See Parts
	AM122264	Skid Shoe, Heavy Duty Right Hand (1) *For Snow Blower.*	See Parts
	BG20260	Sun Canopy	99.00
	M150364	Wheel Cover, 12 In. (Chrome)	See Parts
	M114663	Wheel Cover, 12 In. (Yellow Plastic)	See Parts
		Mower Deck and Mower Deck Attachments:	
	BG20477	54 In. Complete Mower Deck	1,155.60

D170 Lawn Tractor

Continued

CODE	ATTACHMENT IDENTIFIER	DESCRIPTION	SUGGESTED LIST PRICE USD ($)
		ATTACHMENTS FOR FIELD CONVERSION Continued...	
	BG20707	54 In. Complete Mower Deck	1,155.60
	BG20304	54 In. Mulch Kit *Fits G110, 190C.*	222.56
		Order Zone:	
	LPJD100	Bucket Holder (Single)	In Catalog
	LP93617	Riding Mower Deluxe Cover (M)	In Catalog
	LP93917	Riding Mower Standard Cover	In Catalog
	LP31342	Snow Cab 2011 D Series Tractors	In Catalog
	LP21790	Snow Cab 2010 and previous 100 Series Tractors	In Catalog
		Spanish North American Kit:	
	BG20621	Spanish North American Label & Decal Kit	16.06
		Weights:	
	R66949	Quik-Tatch Weight, 42 Lb.	62.06
	BG20029	Quik-Tatch Weight, 42 Lb. (Boxed) *Two Required.*	63.13
	BG20627	Rear Weight Bracket *One Rear Weight Bracket is Required.*	54.57
	BM17962	Wheel Weight (Cast Iron, Front, 34 Lb., 5 or 6 in wheel) *Requires BM17978 Mounting Hardware.*	133.76
		SERVICE CONTRACTS - RESIDENTIAL OWNERS/USE	
		Visit http://www.JohnDeere.com/ServicePlans for more information on John Deere Service Contracts. May not be Available in Parts of the U.S., Not Available in Canada. Price may vary due to driving distance and/or time from machine to dealership location.	
		John Deere Extended Service Plan - 3-Year Option *3-year extended service plan. (1 year of extended service protection); 3-years of warranty transportation.*	199.99
		John Deere Extended Service Plan - 4-Year Option *4-year extended service plan. (2 years of extended service protection); 4-years of warranty transportation.*	249.99

D110 Lawn Tractor - California Model

Equipment for Base Machine

ENGINE:
*19.5 HP
Overhead Valves
Full Pressure Lubrication
Oil Filter
TRANSMISSON - AUTOMATIC:
Tuff Torq, Hydrostatic,
Infinitely Variable Speed
Two Pedal Foot Control
ELECTRICAL:
Regulated Charging System
9 Amp
OPERATOR STATION:
4-Position Key Switch
with Position for Headlight
Control
Reverse Implement Option (RIO)

STEERING:
Sector & Pinion with Dual
Drag Links
18 In. Turning Radius
THE EDGE CUTTING SYSTEM:
42 In. Cutting Width
1-4 In. Cutting Heights in
1/4 In. Increments
Two Gauge Wheels
MODELS FEATURE:
Cast-Iron Front Axle
Full-Length Welded Steel
Frame
Cargo Mount System
Fuel Tank Capacity
2.4 U.S. Gallons

Fuel Gauge
Integrated Cupholder
WHEELS AND TIRES:
Front Tires:
15x6.00-6 In.
Rear Tires:
20x8.00-8 In.

CODE	ATTACHMENT IDENTIFIER	DESCRIPTION	SUGGESTED LIST PRICE USD ($)

Select One Code From Each Required Category

D110 Lawn Tractor

F.O.B. Greenville, TN

0814GX		D110 Lawn Tractor - California Model	1,799.00

ATTACHMENTS FOR FIELD CONVERSION

		Material Collection System:	
	BM21888	6.5 Bushel Hopper and Chute for 100 Series, 42 In.	349.00
		Miscellaneous:	
	BG20020	46 In. Snow Blade *Requires Rear Ballast and Tire Chains.*	323.14
	M88984	Drift Blade	See Parts
	BG20436	Front Bumper	74.90
	TY15959	Rear Tire Chain Kit (Pair) for 20x8-8	See Parts
	AM122263	Skid Shoe, Heavy Duty Left Hand (1) *For Snow Blower.*	See Parts
	AM122264	Skid Shoe, Heavy Duty Right Hand (1) *For Snow Blower.*	See Parts
	BG20260	Sun Canopy	99.00
	M150361	Wheel Cover, 6 In. (Chrome)	See Parts
	M118001	Wheel Cover, 6 In. (Yellow Plastic)	See Parts
		Mower Deck and Mower Deck Attachments:	
	BG20705	42 In. Complete Mower Deck	642.00

D110 Lawn Tractor - California Model

Continued

CODE	ATTACHMENT IDENTIFIER	DESCRIPTION	SUGGESTED LIST PRICE USD ($)
		ATTACHMENTS FOR FIELD CONVERSION Continued...	
	GY00115	Mulch Cover (42 In.)	See Parts
	BM21816	Mulch Kit (42 In. or 42X)	99.51
		Order Zone:	
	LPJD100	Bucket Holder (Single)	In Catalog
	LP93617	Riding Mower Deluxe Cover (M)	In Catalog
	LP93917	Riding Mower Standard Cover	In Catalog
	LP31342	Snow Cab 2011 D Series Tractors	In Catalog
	LP21790	Snow Cab 2010 and previous 100 Series Tractors	In Catalog
		Spanish North American Kit:	
	BG20621	Spanish North American Label & Decal Kit	16.06
		Weights:	
	R66949	Quik-Tatch Weight, 42 Lb.	62.06
	BG20029	Quik-Tatch Weight, 42 Lb. (Boxed) *Two Required.*	63.13
	BG20627	Rear Weight Bracket *One Rear Weight Bracket is Required.*	54.57
	BM17962	Wheel Weight (Cast Iron, Front, 34 Lb., 5 or 6 in wheel) *Requires BM17978 Mounting Hardware.*	133.76
	BM17978	Wheel Weight Mounting Hardware (1) for Attaching Front Wheel Weight	10.70

D120 Lawn Tractor - California Model

Equipment for Base Machine

ENGINE:
*21 HP
Overhead Valves
Full Pressure Lubrication
Oil Filer
TRANSMISSON - AUTOMATIC:
Tuff Torq, Hydrostatic,
Infinitely Variable Speed
Two Pedal Foot Control
ELECTRICAL:
Regulated Charging System
9 Amp
OPERATOR STATION:
4-Position Key Switch
with Position for Headlight
Control
Hourmeter with Service Reminder
Reverse Implement Option (RIO)
STEERING:
Sector & Pinion with Dual
Drag Links
18 In. Turning Radius
THE EDGE CUTTING SYSTEM:
42 In. Cutting Width
1-4 In. Cutting Heights in
1/4 In. Increments
Two Gauge Wheels
MODELS FEATURE:
Cast-Iron Front Axle
Full-Length Welded Steel
Frame
Cargo Mount System
Fuel Tank Capacity
2.4 U.S. Gallons
Fuel Gauge
Cargo Door
Integrated Cupholder
WHEELS AND TIRES:
Front Tires:
15x6.00-6 In.
Rear Tires:
20x8.00-8 In.

CODE	ATTACHMENT IDENTIFIER	DESCRIPTION	SUGGESTED LIST PRICE USD ($)
		Select One Code From Each Required Category	
		D120 Lawn Tractor	
		F.O.B. Greenville, TN	
0823GX		D120 Lawn Tractor - California Model	1,899.00
		ATTACHMENTS FOR FIELD CONVERSION	
		Material Collection System:	
	BM21888	6.5 Bushel Hopper and Chute for 100 Series, 42 In.	349.00
		Miscellaneous:	
	BG20020	46 In. Snow Blade *Requires Rear Ballast and Tire Chains.*	323.14
	M88984	Drift Blade	See Parts
	BG20436	Front Bumper	74.90
	TY15959	Rear Tire Chain Kit (Pair) for 20x8-8	See Parts
	AM122263	Skid Shoe, Heavy Duty Left Hand (1) *For Snow Blower.*	See Parts
	AM122264	Skid Shoe, Heavy Duty Right Hand (1) *For Snow Blower.*	See Parts
	BG20260	Sun Canopy	99.00
	M150361	Wheel Cover, 6 In. (Chrome)	See Parts
	M118001	Wheel Cover, 6 In. (Yellow Plastic)	See Parts
		Mower Deck and Mower Deck Attachments:	
	BG20705	42 In. Complete Mower Deck	642.00

D120 Lawn Tractor - California Model

Continued

CODE	ATTACHMENT IDENTIFIER	DESCRIPTION	SUGGESTED LIST PRICE USD ($)
		ATTACHMENTS FOR FIELD CONVERSION Continued...	
	GY00115	Mulch Cover (42 In.)	See Parts
	BM21816	Mulch Kit (42 In. or 42X)	99.51
		Order Zone:	
	LPJD100	Bucket Holder (Single)	In Catalog
	LP93617	Riding Mower Deluxe Cover (M)	In Catalog
	LP93917	Riding Mower Standard Cover	In Catalog
	LP31342	Snow Cab 2011 D Series Tractors	In Catalog
	LP21790	Snow Cab 2010 and previous 100 Series Tractors	In Catalog
		Spanish North American Kit:	
	BG20621	Spanish North American Label & Decal Kit	16.06
		Weights:	
	R66949	Quik-Tatch Weight, 42 Lb.	62.06
	BG20029	Quik-Tatch Weight, 42 Lb. (Boxed) *Two Required.*	63.13
	BG20627	Rear Weight Bracket *One Rear Weight Bracket is Required.*	54.57
	BM17962	Wheel Weight (Cast Iron, Front, 34 Lb., 5 or 6 in wheel) *Requires BM17978 Mounting Hardware.*	133.76
	BM17978	Wheel Weight Mounting Hardware (1) for Attaching Front Wheel Weight	10.70

D130 Lawn Tractor - California Model

Equipment for Base Machine

ENGINE:
*22 HP
V-Twin
Overhead Valves
Full Pressure Lubrication
Oil Filter
TRANSMISSON - AUTOMATIC:
Tuff Torq, Hydrostatic,
Infinitely Variable Speed
Two Pedal Foot Control
ELECTRICAL:
Regulated Charging System
9 Amp
OPERATOR STATION:
4-Position Key Switch
with Position for Headlight
Control
Hourmeter with Service Reminder
Reverse Implement Option (RIO)
STEERING:
Sector & Pinion with Dual
Drag Links
18 In. Turning Radius
THE EDGE CUTTING SYSTEM:
42 In. Cutting Width
1-4 In. Cutting Heights in
1/4 In. Increments
Two Gauge Wheels
MODELS FEATURE:
Cast-Iron Front Axle
Full-Length Welded Steel
Frame
Cargo Mount System
Fuel Tank Capacity
2.4 U.S. Gallons
Fuel Gauge
Cargo Door
Integrated Cupholder
WHEELS AND TIRES:
Front Tires:
15x6.00-6 In.
Rear Tires:
20x10.00-8 In.

CODE	ATTACHMENT IDENTIFIER	DESCRIPTION	SUGGESTED LIST PRICE USD ($)

Select One Code From Each Required Category

D130 Lawn Tractor

F.O.B. Greenville, TN

0833GX		D130 Lawn Tractor - California Model	1,999.00

ATTACHMENTS FOR FIELD CONVERSION

		Material Collection System:	
	BM21888	6.5 Bushel Hopper and Chute for 100 Series, 42 In.	349.00
		Miscellaneous:	
	BG20020	46 In. Snow Blade *Requires Rear Ballast and Tire Chains.*	323.14
	M88984	Drift Blade	See Parts
	AM122263	Skid Shoe, Heavy Duty Left Hand (1) *For Snow Blower.*	See Parts
	AM122264	Skid Shoe, Heavy Duty Right Hand (1) *For Snow Blower.*	See Parts
	BG20260	Sun Canopy	99.00
	M150361	Wheel Cover, 6 In. (Chrome)	See Parts
	M118001	Wheel Cover, 6 In. (Yellow Plastic)	See Parts
		Mower Deck and Mower Deck Attachments:	
	BG20705	42 In. Complete Mower Deck	642.00
	GY00115	Mulch Cover (42 In.)	See Parts
	BM21816	Mulch Kit (42 In. or 42X)	99.51

D130 Lawn Tractor - California Model

Continued

CODE	ATTACHMENT IDENTIFIER	DESCRIPTION	SUGGESTED LIST PRICE USD ($)
		ATTACHMENTS FOR FIELD CONVERSION Continued...	
		Order Zone:	
	LPJD100	Bucket Holder (Single)	In Catalog
	LP93617	Riding Mower Deluxe Cover (M)	In Catalog
	LP93917	Riding Mower Standard Cover	In Catalog
	LP31342	Snow Cab 2011 D Series Tractors	In Catalog
	LP21790	Snow Cab 2010 and previous 100 Series Tractors	In Catalog
		Seats / Wheels / Tires:	
	TY16200	Tire Chains (Pair) for 20x10-8, 20x10-10	See Parts
		Spanish North American Kit:	
	BG20621	Spanish North American Label & Decal Kit	16.06
		Weights:	
	R66949	Quik-Tatch Weight, 42 Lb.	62.06
	BG20029	Quik-Tatch Weight, 42 Lb. (Boxed) *Two Required.*	63.13
	BG20627	Rear Weight Bracket *One Rear Weight Bracket is Required.*	54.57
	BM17962	Wheel Weight (Cast Iron, Front, 34 Lb., 5 or 6 in wheel) *Requires BM17978 Mounting Hardware.*	133.76
	BM17978	Wheel Weight Mounting Hardware (1) for Attaching Front Wheel Weight	10.70

D140 Lawn Tractor - California Model

Equipment for Base Machine

ENGINE:
*22 HP
V-Twin
Overhead Valves
Full Pressure Lubrication
Oil Filter
TRANSMISSON - AUTOMATIC:
Tuff Torq, Hydrostatic,
Infinitely Variable Speed
Two Pedal Foot Control
ELECTRICAL:
Regulated Charging System
9 Amp
OPERATOR STATION:
4-Position Key Switch
with Position for Headlight
Control
Hourmeter with Service Reminder
Reverse Implement Option (RIO)
STEERING:
Sector & Pinion with Dual
Drag Links
18 In. Turning Radius
THE EDGE CUTTING SYSTEM:
48 In. Cutting Width
1-4 In. Cutting Heights in
1/4 In. Increments
Four Gauge Wheels
MODELS FEATURE:
Cast-Iron Front Axle
Full-Length Welded Steel
Frame
Cargo Mount System
Fuel Tank Capacity
2.4 U.S. Gallons
Fuel Gauge
Cargo Door
Integrated Cupholder
WHEELS AND TIRES:
Front Tires:
15x6.00-6 In.
Rear Tires:
20x10-8 In.

CODE	ATTACHMENT IDENTIFIER	DESCRIPTION	SUGGESTED LIST PRICE USD ($)

Select One Code From Each Required Category

D140 Lawn Tractor

F.O.B. Greenville, TN

0843GX		D140 Lawn Tractor - California Model	2,099.00

ATTACHMENTS FOR FIELD CONVERSION

		Material Collection System:	
	BM21889	6.5 Bushel Hopper and Chute for 100 Series, 48 In.	359.00
		Miscellaneous:	
	BG20020	46 In. Snow Blade *Requires Rear Ballast and Tire Chains.*	323.14
	M88984	Drift Blade	See Parts
	BG20436	Front Bumper	74.90
	AM122263	Skid Shoe, Heavy Duty Left Hand (1) *For Snow Blower.*	See Parts
	AM122264	Skid Shoe, Heavy Duty Right Hand (1) *For Snow Blower.*	See Parts
	BG20260	Sun Canopy	99.00
	M150361	Wheel Cover, 6 In. (Chrome)	See Parts
	M118001	Wheel Cover, 6 In. (Yellow Plastic)	See Parts
		Mower Deck and Mower Deck Attachments:	
	BG20706	48 In. Complete Mower Deck	930.90
	BG20470	48" Mower Deck Blowout Kit	49.21

D140 Lawn Tractor - California Model

Continued

CODE	ATTACHMENT IDENTIFIER	DESCRIPTION	SUGGESTED LIST PRICE USD ($)
		ATTACHMENTS FOR FIELD CONVERSION Continued...	
	GX21785	High Lift Bagging Blades for 48" Deck	See Parts
	GY20417	Mulch Cover (48 In.)	See Parts
		Order Zone:	
	LPJD100	Bucket Holder (Single)	In Catalog
	LP93617	Riding Mower Deluxe Cover (M)	In Catalog
	LP93917	Riding Mower Standard Cover	In Catalog
	LP31342	Snow Cab 2011 D Series Tractors	In Catalog
	LP21790	Snow Cab 2010 and previous 100 Series Tractors	In Catalog
		Seats / Wheels / Tires:	
	TY16200	Tire Chains (Pair) for 20x10-8, 20x10-10	See Parts
		Spanish North American Kit:	
	BG20621	Spanish North American Label & Decal Kit	16.06
		Weights:	
	R66949	Quik-Tatch Weight, 42 Lb.	62.06
	BG20029	Quik-Tatch Weight, 42 Lb. (Boxed) *Two Required.*	63.13
	BG20627	Rear Weight Bracket *One Rear Weight Bracket is Required.*	54.57
	BM17962	Wheel Weight (Cast Iron, Front, 34 Lb., 5 or 6 in wheel) *Requires BM17978 Mounting Hardware.*	133.76
	BM17978	Wheel Weight Mounting Hardware (1) for Attaching Front Wheel Weight	10.70

D160 Lawn Tractor - California Model

Equipment for Base Machine

ENGINE:
*24 HP
V-Twin
Overhead Valves
Full Pressure Lubrication
Oil Filter
TRANSMISSON - AUTOMATIC:
Tuff Torq, Hydrostatic,
Infinitely Variable Speed
Two Pedal Foot Control
ELECTRICAL:
12 Volt Power Outlet
Regulated Charging System
16 Amp
OPERATOR STATION:
4-Position Key Switch
with Position for Headlight
Control
Hourmeter with Service Reminder
Reverse Implement Option (RIO)
STEERING:
Sector & Pinion with Dual
Drag Links
18 In. Turning Radius
THE EDGE CUTTING SYSTEM:
48 In. Cutting Width
1-4 In. Cutting Heights in
1/4 In. Increments
Four Gauge Wheels
MODELS FEATURE:
Cast-Iron Front Axle
Full-Length Welded Steel
Frame
Cargo Mount System
Fuel Tank Capacity
2.4 U.S. Gallons
Fuel Gauge
Cargo Door
Integrated Cupholder
WHEELS AND TIRES:
Front Tires:
16x6.5-8 In.
Rear Tires:

CODE	ATTACHMENT IDENTIFIER	DESCRIPTION	SUGGESTED LIST PRICE USD ($)

Select One Code From Each Required Category

D160 Lawn Tractor

F.O.B. Greenville, TN

0873GX		D160 Lawn Tractor - California Model	2,699.00

ATTACHMENTS FOR FIELD CONVERSION

		Material Collection System:	
	BM21889	6.5 Bushel Hopper and Chute for 100 Series, 48 In.	359.00
		Miscellaneous:	
	BG20020	46 In. Snow Blade *Requires Rear Ballast and Tire Chains.*	323.14
	M88984	Drift Blade	See Parts
	AM122263	Skid Shoe, Heavy Duty Left Hand (1) *For Snow Blower.*	See Parts
	AM122264	Skid Shoe, Heavy Duty Right Hand (1) *For Snow Blower.*	See Parts
	BG20260	Sun Canopy	99.00
	M150364	Wheel Cover, 12 In. (Chrome)	See Parts
	M114663	Wheel Cover, 12 In. (Yellow Plastic)	See Parts
		Mower Deck and Mower Deck Attachments:	
	BG20706	48 In. Complete Mower Deck	930.90
	BG20470	48" Mower Deck Blowout Kit	49.21
	GX21785	High Lift Bagging Blades for 48" Deck	See Parts

D160 Lawn Tractor - California Model

Continued

CODE	ATTACHMENT IDENTIFIER	DESCRIPTION	SUGGESTED LIST PRICE USD ($)
		ATTACHMENTS FOR FIELD CONVERSION Continued...	
	GY20417	Mulch Cover (48 In.)	See Parts
		Order Zone:	
	LPJD100	Bucket Holder (Single)	In Catalog
	LP93617	Riding Mower Deluxe Cover (M)	In Catalog
	LP93917	Riding Mower Standard Cover	In Catalog
	LP31342	Snow Cab 2011 D Series Tractors	In Catalog
	LP21790	Snow Cab 2010 and previous 100 Series Tractors	In Catalog
		Spanish North American Kit:	
	BG20621	Spanish North American Label & Decal Kit	16.06
		Weights:	
	R66949	Quik-Tatch Weight, 42 Lb.	62.06
	BG20029	Quik-Tatch Weight, 42 Lb. (Boxed) *Two Required.*	63.13
	BG20627	Rear Weight Bracket *One Rear Weight Bracket is Required.*	54.57
	BM17962	Wheel Weight (Cast Iron, Front, 34 Lb., 5 or 6 in wheel) *Requires BM17978 Mounting Hardware.*	133.76

D170 Lawn Tractor - California Model

Equipment for Base Machine

ENGINE:
26 HP
V-Twin
Overhead Valves
Full Pressure Lubrication
Oil Filter
TRANSMISSON - AUTOMATIC:
Tuff Torq, Hydrostatic,
Infinitely Variable Speed
Two Pedal Foot Control
ELECTRICAL:
12 Volt Power Outlet
Regulated Charging System
16 Amp
OPERATOR STATION:
4-Position Key Switch
with Position for Headlight
Control
Hourmeter with Service Reminder
Reverse Implement Option (RIO)
STEERING:
Sector & Pinion with Dual
Drag Links
18 In. Turning Radius
THE EDGE CUTTING SYSTEM:
54 In. Cutting Width
1-4 In. Cutting Heights in
1/4 In. Increments
Four Gauge Wheels with mid deck
nose roller
MODELS FEATURE:
Cast-Iron Front Axle
Full-Length Welded Steel
Frame
Cargo Mount System
Fuel Tank Capacity
2.4 U.S. Gallons
Fuel Gauge
Cargo Door
Integrated Cupholder
WHEELS AND TIRES:
Front Tires:
16x6.5-8 In.
Rear Tires:
22x9.5-12 In.

CODE	ATTACHMENT IDENTIFIER	DESCRIPTION	SUGGESTED LIST PRICE USD ($)

Select One Code From Each Required Category

D170 Lawn Tractor

F.O.B. Greenville, TN

0883GX		D170 Lawn Tractor - California Model	2,899.00

ATTACHMENTS FOR FIELD CONVERSION

		Miscellaneous:	
	BG20020	46 In. Snow Blade *Requires Rear Ballast and Tire Chains.*	323.14
	M88984	Drift Blade	See Parts
	AM122263	Skid Shoe, Heavy Duty Left Hand (1) *For Snow Blower.*	See Parts
	AM122264	Skid Shoe, Heavy Duty Right Hand (1) *For Snow Blower.*	See Parts
	BG20260	Sun Canopy	99.00
	M150364	Wheel Cover, 12 In. (Chrome)	See Parts
	M114663	Wheel Cover, 12 In. (Yellow Plastic)	See Parts
		Mower Deck and Mower Deck Attachments:	
	BG20477	54 In. Complete Mower Deck	1,155.60
	BG20707	54 In. Complete Mower Deck	1,155.60
	BG20304	54 In. Mulch Kit *Fits G110, 190C.*	222.56

D170 Lawn Tractor - California Model

Continued

CODE	ATTACHMENT IDENTIFIER	DESCRIPTION	SUGGESTED LIST PRICE USD ($)
		ATTACHMENTS FOR FIELD CONVERSION Continued...	
		Order Zone:	
	LPJD100	Bucket Holder (Single)	In Catalog
	LP93617	Riding Mower Deluxe Cover (M)	In Catalog
	LP93917	Riding Mower Standard Cover	In Catalog
	LP31342	Snow Cab 2011 D Series Tractors	In Catalog
	LP21790	Snow Cab 2010 and previous 100 Series Tractors	In Catalog
		Spanish North American Kit:	
	BG20621	Spanish North American Label & Decal Kit	16.06
		Weights:	
	R66949	Quik-Tatch Weight, 42 Lb.	62.06
	BG20029	Quik-Tatch Weight, 42 Lb. (Boxed) *Two Required.*	63.13
	BG20627	Rear Weight Bracket *One Rear Weight Bracket is Required.*	54.57
	BM17962	Wheel Weight (Cast Iron, Front, 34 Lb., 5 or 6 in wheel) *Requires BM17978 Mounting Hardware.*	133.76

Select Series X300R Tractor with 42 In. Edge Xtra Rear Discharge Deck

Equipment for Base Machine

Exclusive Air Intake System
V-Twin Engine
Overhead Valves
Hemispheric Cylinder Head
V-Valve Technology
Cast Iron Cylinder Liners
Full Pressure Lubrication with Replaceable Oil Filter
18.5 HP
42 IN. EDGE XTRA REAR DISCHARGE CUTTING SYSTEM
Two .67 In. StarLock Greaseable Spindles
Two Front 2.6 In. Wide Anti-Scalp Wheels
Wash Ports
4 Point Mounting
Adjustable Down Stop
.25 In. Cut Height Increments
1 to 3.75 In. Cutting Heights
On Board Leveling Gauge
Exact Adjust Leveling Ports
29 In. Uncut Circle Radius
INTEGRATED COLLECTION SYSTEM
8.5 bu. (300 Liter) Collection Hopper
Turbostar Fan
Automatic PTO Shut Off/Hopper Full
TIRES
15x6-6 Front Turf Tires
20x10-8 Rear Turf Tires
STEERING
2 Wheel Low Effort Steering System
20 In. Turning Radius
Cast Iron Front Axle with Replaceable Metal Bushings
.75 In. Front Spindles
AUTOMATIC (HYDROSTATIC) TRANSMISSION
Twin Touch Foot Control
Tuff-Torque K46 Transaxle
Internal Wet Disk Brakes
Tow valve
5.3 mph (8.5 km/h) Forward, 4.0 mph (6.4 km/h) Reverse Travel Speed
Cruise Control
OPERATOR STATION
14 In. Steering Wheel
15 In. Open Back Seat with Access Grip, 7 In. Fore-Aft Adjustment and Adjustable Suspension
Cup Holder
ELECTRICAL SYSTEM
195 CCA Battery
15 Amp Regulated Charging System
Four-Position Key Switch with Headlight Switch
Hour Meter
Seat/PTO Interlock Switches
Reverse Implement Option
MISCELLANEOUS
2.0 US Gallon Fuel Tank Capacity
Welded C-Channel Frame
Electric Mower/Implement PTO Drive Clutch
Foot Pedal Deck and Implement Lift System
Adjustable Lift Assist Spring
*Engine HP is Provided by the Engine Manufacturer to be Used for Comparison Purposes Only, Actual Operating HP will be Less. Refer to the Engine Manufacturer's Web Site for Additional Information.

CODE	ATTACHMENT IDENTIFIER	DESCRIPTION	SUGGESTED LIST PRICE USD ($)

Select One Code From Each Required Category

Select Series X300R

F.O.B. Janesville, Wisconsin

4758M		Select Series X300R Tractor with 42 In. Edge Xtra Rear Discharge Deck	4,199.00

DESTINATION

0202		United States and Canada	In Base Price
0230		Australia and New Zealand	Same Price
0195		Mexico	Same Price
0250		Other	Same Price

ATTACHMENTS FOR FIELD CONVERSION

		Blades:	
	SKU23044	44 In. Front Blade (X300) *Rear Weights and Tire Chains are Recommended for Additional Traction*	547.00
		Engine:	
	AM135845	Spark Arrester Muffler Screen (X300s, X500 M-Ts)	See Parts

Select Series X300R Tractor with 42 In. Edge Xtra Rear Discharge Deck
Continued

CODE	ATTACHMENT IDENTIFIER	DESCRIPTION	SUGGESTED LIST PRICE USD ($)
		ATTACHMENTS FOR FIELD CONVERSION Continued...	
		FRONT MOUNTED THATCHERS:	
	TY13056	38 In. Front Thatcher (Center) *Requires Mounting Frame.*	216.14
	TY13036	8 In. Front Thatcher (Extension)	53.50
	BM24000	Thatcher Mounting Frame (X300, X500 M-T)	203.30
		Material Collection System Hoppers:	
	BM21679	7 Bushel Hopper Assembly *Requires Appropriate Rear Bagger Chute Front. Ballast Recommended, Especially on Hills or Inclines.*	433.36
		Miscellaneous:	
	AM136716	12 Volt Outlet Kit (X300)	See Parts
	BM17981	12 Volt Work Light Kit	51.36
	TY25866	Battery Charger and Maintainer	See Parts
	BM23057	Brush Guard (X300, X500 M-T)	124.11
	BM23056	Bumper (X300s, X500, X530, X534)	62.06
	TY25341	Debris bag	See Parts
	M88984	Drift Blade *For Snow Blowers. Requires (2) 19H1914 Bolts and (2) N10217 Lock Nuts.*	See Parts
	TY27534	Fuel Protect for Gasoline Engines (8 oz.)	See Parts
	LG256	Home Maintenance Kit *For use with MY2007-2009 (Serial 040001-150000).*	See Parts
	LG265	Home Maintenance Kit *For use with MY2010- (Serial 150001-).*	See Parts
	BM22196	Rear Deflector Kit (X300R)	123.06
	AM132109	Rubber Blade Squeegee Kit	See Parts
	AM136046	Seat Net Kit	See Parts
	AM122263	Skid Shoe, Heavy Duty Left Hand (1) *For Snow Blower.*	See Parts
	AM122264	Skid Shoe, Heavy Duty Right Hand (1) *For Snow Blower.*	See Parts
	M157831	Skid shoe, Plastic (1) *For 44-, 47-, and 54-in. Snow Blowers. Two required.*	See Parts
	M115237	Spacer	See Parts
	BM23054	Sun Shade (X300/X500 M-T)	161.57
	AM141153	Wheel Cover, 6 In. (Stainless Steel)	See Parts

Select Series X300R Tractor with 42 In. Edge Xtra Rear Discharge Deck
Continued

CODE	ATTACHMENT IDENTIFIER	DESCRIPTION	SUGGESTED LIST PRICE USD ($)
		ATTACHMENTS FOR FIELD CONVERSION Continued...	
	AM141154	Wheel Cover, 8 In. (Stainless Steel)	See Parts
		Mower Deck and Mower Deck Attachments:	
	AM140974	Blade Kit (X300R, Bagging and Rear Discharge)	See Parts
	AM140975	Blade Kit (X300R, Mulching)	See Parts
	AM130907	Mower Deck Leveling Gauge	See Parts
		Order Zone:	
	LP40000	40-In. Tractor Shovel	In Catalog
	LP33712	Manual Angling Kit (44 in Front Blade X300s)	In Catalog
		Protection:	
	LP92624	Seat Cover (Deluxe Medium) - Yellow	In Catalog
	LP92324	Seat Cover - Yellow	In Catalog
		Seats / Wheels / Tires:	
	BM19123	31 Lb. Plastic Rear Wheel Weights	65.27
	TY16200	Tire Chains (Pair) for 20x10-8, 20x10-10	See Parts
		Snow Blowers:	
	SKU23045	44 In. Snow Blower (X300's, X500, X520) *Rear Weights and Tire Chains are Recommended for Additional Traction. Winter Grill Cover Recommended on Air-cooled Engines to Prevent Carburetor Icing. Collection Hopper or a BM22196 Rear Deflector Kit are Required. For Snow Blowers built prior to April 2008 (Serial -030001) see DTAC Solution 79224 for Adaptation Instructions.*	1,555.00
	AM136691	Winter Grill Cover *Used on X300s, MY2007- Model X500 (serial 020001-), X530, and MY2011- X534 (serial 060001-).*	See Parts
		Weights:	
	R66949	Quik-Tatch Weight, 42 Lb.	62.06
	BM23621	Weight Bracket, Front (X300/X500 M-T) *Allows installation of R66949 Quik-Tatch Weights. Used on X300s, MY2007- Model X500 (serial 020001-), X530, and MY2011- X534 (serial 060001-).*	58.86
	BM17962	Wheel Weight (Cast Iron, Front, 34 Lb., 5 or 6 in wheel) *Requires BM17978 Mounting Hardware.*	133.76
	BM17978	Wheel Weight Mounting Hardware (1) for Attaching Front Wheel Weight	10.70

SERVICE CONTRACTS - RESIDENTIAL OWNERS/USE

Visit http://www.JohnDeere.com/ServicePlans for more information on John Deere Service Contracts. May not be Available in Parts of the U.S., Not Available in Canada. Price may vary due to driving distance and/or time from machine to dealership location.

		John Deere Extended Service Plan - 5-Year Option	399.99

Select Series X300R Tractor with 42 In. Edge Xtra Rear Discharge Deck

Continued

CODE	ATTACHMENT IDENTIFIER	DESCRIPTION	SUGGESTED LIST PRICE USD ($)
		SERVICE CONTRACTS - RESIDENTIAL OWNERS/USE Continued...	
		5-year extended service plan. (1- year of extended service protection); 5-years of warranty transportation.	
		John Deere Extended Service Plan - 6-Year Option *6-year extended service plan. (2- years of extended service protection); 6-years of warranty transportation.*	529.99

Select Series X300 Tractor with 42X Edge Xtra Deck

Equipment for Base Machine

Exclusive Air Intake System
V-Twin Engine
Overhead Valves
Hemispheric Cylinder Head
V-Valve Technology
Cast Iron Cylinder Liners
Full Pressure Lubrication with Replaceable Oil Filter
18.5 HP
42 IN. EDGE XTRA CUTTING SYSTEM
Two .67 In. StarLock Greaseable Spindles
Two Front 2.6 In. Wide Anti-Scalp Wheels
4 Point Mounting
Adjustable Down Stop
.25 In. Cut Height Increments
1 to 4 In. Cutting Heights
On Board Leveling Gauge
Exact Adjust Leveling Ports
28 in Uncut Circle Radius
TIRES
15x6-6 Front Turf Tires
20x10-8 Rear Turf Tires
STEERING
2 Wheel Low Effort Steering System
16 In. Turning Radius
Cast Iron Front Axle with Replaceable Metal Bushings
.75 In. Front Spindles
AUTOMATIC (HYDROSTATIC) TRANSMISSION
Twin Touch Foot control
Tuff-Torque K46 Transaxle
Internal Wet Disk Brakes
Tow valve
5.5 mph (8.9 km/h) Forward, 4.0 mph (6.4 km/h) Reverse Travel Speed
Cruise Control
OPERATOR STATION
14 In. Steering Wheel
15 In. Open Back Seat with Access
Grip, 7 In. Fore-Aft Adjustment and Adjustable Suspension
Cup Holder
ELECTRICAL SYSTEM
195 CCA Battery
15 Amp Regulated Charging System
Four-Position Key Switch with Headlight Switch
Hour Meter
Seat/PTO Interlock Switches
Reverse Implement Option
MISCELLANEOUS
3.3 US Gallon Fuel Tank Capacity
Welded C-Channel Frame
Rear Hitch Accepts 2 Quik-Tatch Weights
Electric Mower/Implement PTO Drive Clutch
Foot Pedal Deck and Implement Lift System
Heavy Duty CargO Mount System
*Engine HP is Provided by the Engine Manufacturer to be Used for Comparison Purposes Only, Actual Operating HP will be Less. Refer to the Engine Manufacturer's Web Site for Additional Information.

CODE	ATTACHMENT IDENTIFIER	DESCRIPTION	SUGGESTED LIST PRICE USD ($)

Select One Code From Each Required Category

Select Series X300 - 42X

F.O.B. Janesville, Wisconsin

470HM		Select Series X300 Tractor with 42X Edge Xtra Deck	2,999.00

DESTINATION

0202		United States and Canada	In Base Price
0230		Australia and New Zealand	Same Price
0195		Mexico	Same Price
0250		Other	Same Price

ATTACHMENTS FOR FIELD CONVERSION

		Blades:	
	SKU23044	44 In. Front Blade (X300)	547.00
		Rear Weights and Tire Chains are Recommended for Additional Traction	
		Engine:	
	AM135845	Spark Arrester Muffler Screen (X300s, X500 M-Ts)	See Parts

Select Series X300 Tractor with 42X Edge Xtra Deck
Continued

CODE	ATTACHMENT IDENTIFIER	DESCRIPTION	SUGGESTED LIST PRICE USD ($)
		ATTACHMENTS FOR FIELD CONVERSION Continued...	
		FRONT MOUNTED THATCHERS:	
	TY13056	38 In. Front Thatcher (Center) *Requires Mounting Frame.*	216.14
	TY13036	8 In. Front Thatcher (Extension)	53.50
	BM24000	Thatcher Mounting Frame (X300, X500 M-T)	203.30
		Material Collection System Hoppers:	
	BM21679	7 Bushel Hopper Assembly *Requires Appropriate Rear Bagger Chute Front. Ballast Recommended, Especially on Hills or Inclines.*	433.36
	AM135486	Loose knit bags for 7 bu. Hopper	See Parts
		Material Collection System Power Flow/Rear Bagger Chutes:	
	BM22594	Rear Bagger Chute for 42 In. Mowers	90.96
		Miscellaneous:	
	AM136716	12 Volt Outlet Kit (X300)	See Parts
	BM17981	12 Volt Work Light Kit	51.36
	TY25866	Battery Charger and Maintainer	See Parts
	BM23057	Brush Guard (X300, X500 M-T)	124.11
	BM23056	Bumper (X300s, X500, X530, X534)	62.06
	TY25341	Debris bag	See Parts
	M88984	Drift Blade *For Snow Blowers. Requires (2) 19H1914 Bolts and (2) N10217 Lock Nuts.*	See Parts
	TY27534	Fuel Protect for Gasoline Engines (8 oz.)	See Parts
	LG256	Home Maintenance Kit *For use with MY2006-2010 (Serial 010001-180000).*	See Parts
	LG265	Home Maintenance Kit *For use with MY2011- (Serial 180001-).*	See Parts
	AM132109	Rubber Blade Squeegee Kit	See Parts
	AM136046	Seat Net Kit	See Parts
	AM122263	Skid Shoe, Heavy Duty Left Hand (1) *For Snow Blower.*	See Parts
	AM122264	Skid Shoe, Heavy Duty Right Hand (1) *For Snow Blower.*	See Parts
	M157831	Skid shoe, Plastic (1) *For 44-, 47-, and 54-in. Snow Blowers. Two required.*	See Parts
	M115237	Spacer	See Parts

Select Series X300 Tractor with 42X Edge Xtra Deck
Continued

CODE	ATTACHMENT IDENTIFIER	DESCRIPTION	SUGGESTED LIST PRICE USD ($)
		ATTACHMENTS FOR FIELD CONVERSION Continued...	
	BM23054	Sun Shade (X300/X500 M-T)	161.57
	AM141153	Wheel Cover, 6 In. (Stainless Steel)	See Parts
	AM141154	Wheel Cover, 8 In. (Stainless Steel)	See Parts
		Mower Deck and Mower Deck Attachments:	
	SKU24193	42 In. Edge Xtra Deck (42X)	600.00
	BM22550	Anti-Scalp Wheel Extension Kit *For use with MY2007 X320 (Serial 040001-085000), X324 (Serial 040001-085000), and the Model X500 M-T Tractor (Serial 020001-030000). Also for use with non-current SKU22194 (48X with Non-Rotateable Anti-Scalp Wheels) Cartoned Deck.*	57.79
	AM141034	Blade Kit (42X, Bagging)	See Parts
	AM141033	Blade Kit (42X, Mulching)	See Parts
	AM141032	Blade Kit (42X, Side Discharge)	See Parts
	BM20505	Front Blowout Baffle for 42 In. Mower (42C/42X)	38.51
	AM130907	Mower Deck Leveling Gauge	See Parts
	BM21816	Mulch Kit (42 In. or 42X)	99.51
		Order Zone:	
	LP23117	125 lb. Electric Broadcast Spreader Barrier Shield	In Catalog
	LP3301	125 lb. Select Series Mounted Electric Broadcast Spreader *Requires Front Wheel Weights or Front Weight Bracket and 2 weights.*	In Catalog
	LP22861	25-gal. Mounted Sprayer *Tractors equipped with this sprayer require installation of the mid-mount mower, a front attachment, four front suitcase weights, or two front wheel weights.*	In Catalog
	LP40000	40-In. Tractor Shovel	In Catalog
	LP1001	42-In. Tractor Grass Groomer	In Catalog
	LPJD400	Bucket (5 gallon)	In Catalog
	JD01673	Bucket (6 gallon with lid)	In Catalog
	LPJD301	Bucket Holder (Double)	In Catalog
	LPJD100	Bucket Holder (Single)	In Catalog
	LP33711	Electric Lift Kit *For Snow Blower and Front Blade.*	In Catalog
	LP33712	Manual Angling Kit (44 in Front Blade X300s)	In Catalog
	LP93617	Riding Mower Deluxe Cover (M)	In Catalog

Select Series X300 Tractor with 42X Edge Xtra Deck
Continued

CODE	ATTACHMENT IDENTIFIER	DESCRIPTION	SUGGESTED LIST PRICE USD ($)
		ATTACHMENTS FOR FIELD CONVERSION Continued...	
	LP93917	Riding Mower Standard Cover	In Catalog
		Protection:	
	LP92624	Seat Cover (Deluxe Medium) - Yellow	In Catalog
	LP92324	Seat Cover - Yellow	In Catalog
		Seats / Wheels / Tires:	
	TY16200	Tire Chains (Pair) for 20x10-8, 20x10-10	See Parts
		Snow Blowers:	
	SKU23045	44 In. Snow Blower (X300's, X500, X520) *Rear Weights and Tire Chains are Recommended for Additional Traction. Winter Grill Cover Recommended on Air-cooled Engines to Prevent Carburetor Icing. X300, X304 Tractors Shipped less deck or with 38X, 42X or 42M (SN -150000) Decks need to also Order AM136646 Lift Assist Spring Kit.*	1,555.00
	AM136646	Lift Assist Spring Kit	See Parts
	AM136691	Winter Grill Cover *Used on X300s, MY2007- Model X500 (serial 020001-), X530, and MY2011- X534 (serial 060001-).*	See Parts
		Weights:	
	R66949	Quik-Tatch Weight, 42 Lb. *Use up to 2 Weights on the rear of X300 Series Tractors*	62.06
	BM23621	Weight Bracket, Front (X300/X500 M-T) *Allows installation of R66949 Quik-Tatch Weights. Used on X300s, MY2007- Model X500 (serial 020001-), X530, and MY2011- X534 (serial 060001-).*	58.86
	BM17962	Wheel Weight (Cast Iron, Front, 34 Lb., 5 or 6 in wheel) *Requires BM17978 Mounting Hardware.*	133.76
	BM17978	Wheel Weight Mounting Hardware (1) for Attaching Front Wheel Weight	10.70
		SERVICE CONTRACTS - RESIDENTIAL OWNERS/USE	
		Visit http://www.JohnDeere.com/ServicePlans for more information on John Deere Service Contracts. May not be Available in Parts of the U.S., Not Available in Canada. Price may vary due to driving distance and/or time from machine to dealership location.	
		John Deere Extended Service Plan - 5-Year Option *5-year extended service plan. (1- year of extended service protection); 5-years of warranty transportation.*	399.99
		John Deere Extended Service Plan - 6-Year Option *6-year extended service plan. (2- years of extended service protection); 6-years of warranty transportation.*	529.99

Select Series X300 Tractor with 48X Edge Xtra Deck

Equipment for Base Machine

Exclusive Air Intake System
V-Twin Engine
Overhead Valves
Hemispheric Cylinder Head
V-Valve Technology
Cast Iron Cylinder Liners
Full Pressure Lubrication with

Replaceable Oil Filter
18.5 HP
48 IN. EDGE XTRA CUTTING SYSTEM

Three .79 In. Greaseable
Spindles
Two Front and Two Rear 2.6 In.

Wide Rotateable Anti-Scalp
Wheels
No Tools Anti-Scalp Wheel Cut
Height Adjustment
Two 2.9 In Wide Front
Anti-Scalp Rollers
4 Point Mounting
Adjustable Down Stop
.25 In. Cut Height Increments
1 to 4 In. Cutting Heights
On Board Leveling Gauge
Exact Adjust Leveling Ports
21 In. Uncut Circle Radius
TIRES
15x6-6 Front Turf Tires
20x10-8 Rear Turf Tires
STEERING
2 Wheel Low Effort Steering
System
16 In. Turning Radius
Cast Iron Front Axle with
Replaceable Metal Bushings
.75 In. Front Spindles
AUTOMATIC (HYDROSTATIC)
TRANSMISSION
Twin Touch Foot control
Tuff-Torque K46 Transaxle
Internal Wet Disk Brakes
Tow valve
5.5 mph (8.9 km/h) Forward,
4.0 mph (6.4 km/h) Reverse
Travel Speed
Cruise Control
OPERATOR STATION
14 In. Steering Wheel
15 In. Open Back Seat with
Access
Grip, 7 In. Fore-Aft Adjustment

and Adjustable Suspension
Cup Holder
ELECTRICAL SYSTEM
195 CCA Battery
15 Amp Regulated Charging
System
Four-Position Key Switch with
Headlight Switch
Hour Meter
Seat/PTO Interlock Switches
Reverse Implement Option
MISCELLANEOUS
3.3 US Gallon Fuel Tank
Capacity
Welded C-Channel Frame
Rear Hitch Accepts 2 Quik-Tatch

Weights
Electric Mower/Implement PTO
Drive Clutch
Foot Pedal Deck and Implement
Lift System
Adjustable Lift Assist Spring
Heavy Duty CargO Mount System
*Engine HP is Provided by the
Engine Manufacturer to be
Used
for Comparison Purposes Only,

Actual Operating HP will be

Less. Refer to the Engine
Manufacturer's Web Site for
Additional Information

CODE	ATTACHMENT IDENTIFIER	DESCRIPTION	SUGGESTED LIST PRICE USD ($)

Select One Code From Each Required Category

Select Series X300 - 48X

F.O.B. Janesville, Wisconsin

470GM		Select Series X300 Tractor with 48X Edge Xtra Deck	3,399.00

DESTINATION

0202		United States and Canada	In Base Price
0230		Australia and New Zealand	Same Price
0195		Mexico	Same Price
0250		Other	Same Price

ATTACHMENTS FOR FIELD CONVERSION

Blades:

	SKU23044	44 In. Front Blade (X300)	547.00

Rear Weights and Tire Chains are Recommended for Additional Traction

Select Series X300 Tractor with 48X Edge Xtra Deck
Continued

CODE	ATTACHMENT IDENTIFIER	DESCRIPTION	SUGGESTED LIST PRICE USD ($)
		ATTACHMENTS FOR FIELD CONVERSION Continued...	
		Engine:	
	AM135845	Spark Arrester Muffler Screen (X300s, X500 M-Ts)	See Parts
		FRONT MOUNTED THATCHERS:	
	TY13056	38 In. Front Thatcher (Center) *Requires Mounting Frame.*	216.14
	TY13036	8 In. Front Thatcher (Extension)	53.50
	BM24000	Thatcher Mounting Frame (X300, X500 M-T)	203.30
		Material Collection System Hoppers:	
	BM21679	7 Bushel Hopper Assembly *Requires Appropriate Rear Bagger Chute Front. Ballast Recommended, Especially on Hills or Inclines.*	433.36
	AM135486	Loose knit bags for 7 bu. Hopper	See Parts
		Material Collection System Power Flow Blowers:	
	BM22696	48C/48X High-Performance Blower Assembly for Mowers with Rotateable Anti-Scalp Wheels (X300/X500 M-T/X700) *For use with MY2006 X320 (Serial 010001-040000), X324 (Serial) 010001-040000), Model X500 M-T Tractor (Serial 010001-020000), MY2008 X320 (Serial 085001-), MY2008 X324 (Serial 085001-) MY2008 X500 (Serial 030001-) and X360. Also for use with SKU21895 (48X with Rotateable Anti-Scalp Wheels) Cartoned Deck.*	541.41
		Material Collection System Power Flow/Rear Bagger Chutes:	
	BM21681	Power Flow Chute (7 bu.) *For 48C, 48X, 54C or 54X Series Blowers.*	114.49
		Miscellaneous:	
	AM136716	12 Volt Outlet Kit (X300)	See Parts
	BM17981	12 Volt Work Light Kit	51.36
	TY25866	Battery Charger and Maintainer	See Parts
	BM23057	Brush Guard (X300, X500 M-T)	124.11
	BM23056	Bumper (X300s, X500, X530, X534)	62.06
	TY25341	Debris bag	See Parts
	M88984	Drift Blade *For Snow Blowers. Requires (2) 19H1914 Bolts and (2) N10217 Lock Nuts.*	See Parts
	TY27534	Fuel Protect for Gasoline Engines (8 oz.)	See Parts
	LG256	Home Maintenance Kit *For use with MY2006-2010 (Serial 010001-180000).*	See Parts
	LG265	Home Maintenance Kit *For use with MY2011- (Serial 180001-).*	See Parts
	AM132109	Rubber Blade Squeegee Kit	See Parts

Select Series X300 Tractor with 48X Edge Xtra Deck
Continued

CODE	ATTACHMENT IDENTIFIER	DESCRIPTION	SUGGESTED LIST PRICE USD ($)
		ATTACHMENTS FOR FIELD CONVERSION Continued...	
	AM136046	Seat Net Kit	See Parts
	AM122263	Skid Shoe, Heavy Duty Left Hand (1) *For Snow Blower.*	See Parts
	AM122264	Skid Shoe, Heavy Duty Right Hand (1) *For Snow Blower.*	See Parts
	M157831	Skid shoe, Plastic (1) *For 44-, 47-, and 54-in. Snow Blowers. Two required.*	See Parts
	M115237	Spacer	See Parts
	BM23054	Sun Shade (X300/X500 M-T)	161.57
	AM141153	Wheel Cover, 6 In. (Stainless Steel)	See Parts
	AM141154	Wheel Cover, 8 In. (Stainless Steel)	See Parts
		Mower Deck and Mower Deck Attachments:	
	SKU24195	48 in Edge Xtra Deck with Rotateable Anti-Scalp Wheels (48X)	1,000.00
	M127673	Blade (48C/48X, Mulching)	See Parts
	M145476	Blade (48C/48X, Side Discharge)	See Parts
	BM19894	Leaf Bagging Kit (48C/48X Mower) *Contains Three Bolt-on Deck Lips for Improved Bagging of Leaves.*	99.51
	AM130907	Mower Deck Leveling Gauge	See Parts
	BM20007	Mulch Kit (48C/48X)	157.29
		Order Zone:	
	LP23117	125 lb. Electric Broadcast Spreader Barrier Shield	In Catalog
	LP3301	125 lb. Select Series Mounted Electric Broadcast Spreader *Requires Front Wheel Weights or Front Weight Bracket and 2 weights.*	In Catalog
	LP22861	25-gal. Mounted Sprayer *Tractors equipped with this sprayer require installation of the mid-mount mower, a front attachment, four front suitcase weights, or two front wheel weights.*	In Catalog
	LP40000	40-In. Tractor Shovel	In Catalog
	LP1002	48-In. / 54-In. Tractor Grass Groomer	In Catalog
	LPJD400	Bucket (5 gallon)	In Catalog
	JD01673	Bucket (6 gallon with lid)	In Catalog
	LPJD301	Bucket Holder (Double)	In Catalog
	LPJD100	Bucket Holder (Single)	In Catalog
	LP33711	Electric Lift Kit *For Snow Blower and Front Blade.*	In Catalog

Select Series X300 Tractor with 48X Edge Xtra Deck
Continued

CODE	ATTACHMENT IDENTIFIER	DESCRIPTION	SUGGESTED LIST PRICE USD ($)
		ATTACHMENTS FOR FIELD CONVERSION Continued...	
	LP33712	Manual Angling Kit (44 in Front Blade X300s)	In Catalog
	LP93617	Riding Mower Deluxe Cover (M)	In Catalog
	LP93917	Riding Mower Standard Cover	In Catalog
		Protection:	
	LP92624	Seat Cover (Deluxe Medium) - Yellow	In Catalog
	LP92324	Seat Cover - Yellow	In Catalog
		Seats / Wheels / Tires:	
	TY16200	Tire Chains (Pair) for 20x10-8, 20x10-10	See Parts
		Snow Blowers:	
	SKU23045	44 In. Snow Blower (X300's, X500, X520)	1,555.00
	AM136691	Winter Grill Cover *Used on X300s, MY2007- Model X500 (serial 020001-), X530, and MY2011- X534 (serial 060001-).*	See Parts
		Weights:	
	R66949	Quik-Tatch Weight, 42 Lb. *Use up to 2 Weights on the rear of X300 Series Tractors*	62.06
	BM23621	Weight Bracket, Front (X300/X500 M-T) *Allows installation of R66949 Quik-Tatch Weights.* *Used on X300s, MY2007- Model X500 (serial 020001-), X530, and MY2011- X534 (serial 060001-).*	58.86
	BM17962	Wheel Weight (Cast Iron, Front, 34 Lb., 5 or 6 in wheel) *Requires BM17978 Mounting Hardware.*	133.76
	BM17978	Wheel Weight Mounting Hardware (1) for Attaching Front Wheel Weight	10.70
		SERVICE CONTRACTS - RESIDENTIAL OWNERS/USE	
		Visit http://www.JohnDeere.com/ServicePlans for more information on John Deere Service Contracts. May not be Available in Parts of the U.S., Not Available in Canada. Price may vary due to driving distance and/or time from machine to dealership location.	
		John Deere Extended Service Plan - 5-Year Option *5-year extended service plan. (1- year of extended service protection); 5-years of warranty transportation.*	399.99
		John Deere Extended Service Plan - 6-Year Option *6-year extended service plan. (2- years of extended service protection); 6-years of warranty transportation.*	529.99

Select Series X300 Tractor Less Deck

Equipment for Base Machine

Exclusive Air Intake System
V-Twin Engine
Overhead Valves
Hemispheric Cylinder Head
V-Valve Technology
Cast Iron Cylinder Liners
Full Pressure Lubrication with

Replaceable Oil Filter
18.5 HP
LESS MOWER STANDARD
OPTIONAL 38 IN. or 42 IN. EDGE

XTRA CUTTING SYSTEM or 42 IN.
EDGE MULCH CUTTING SYSTEM
Two .67 In. StarLock Greaseable

Spindles
Two Front 2.6 In. Wide
Anti-Scalp Wheels
4 Point Mounting
Adjustable Down Stop
.25 In. Cut Height Increments

1 to 4 In. Cutting Heights
On Board Leveling Gauge
Exact Adjust Leveling Ports
28 In. Uncut Circle Radius
(38X, 42X)
27 in Uncut Circle Radius
(42 Edge Mulch)
Removable Material Gates with
On Board Storage (42 Edge
Mulch)
OPTIONAL 48 IN. EDGE XTRA
CUTTING SYSTEM
Three .79 In. Greaseable
Spindles
Two Front and Two Rear 2.6 In.

Wide Rotateable Anti-Scalp
Wheels
No Tools Anti-Scalp Wheel Cut

Height Adjustment
Two 2.9 In Wide Front
Anti-Scalp Rollers
4 Point Mounting
Adjustable Down Stop
.25 In. Cut Height Increments

1 to 4 In. Cutting Heights
On Board Leveling Gauge
Exact Adjust Leveling Ports
21 In. Uncut Circle Radius
TIRES
15x6-6 Front Turf Tires
20x10-8 Rear Turf Tires
STEERING
2 Wheel Low Effort Steering
System
16 In. Turning Radius
Cast Iron Front Axle with
Replaceable Metal Bushings
.75 In. Front Spindles
AUTOMATIC (HYDROSTATIC)
TRANSMISSION
Twin Touch Foot control
Tuff-Torque K46 Transaxle
Internal Wet Disk Brakes
Tow valve
5.5 mph (8.9 km/h) Forward,
4.0 mph (6.4 km/h) Reverse
Travel Speed
Cruise Control
OPERATOR STATION
14 In. Steering Wheel
15 In. Open Back Seat with
Access
Grip, 7 In. Fore-Aft Adjustment

and Adjustable Suspension
Cup Holder
ELECTRICAL SYSTEM
195 CCA Battery
15 Amp Regulated Charging
System
Four-Position Key Switch with
Headlight Switch
Hour Meter
Seat/PTO Interlock Switches
Reverse Implement Option
MISCELLANEOUS
3.3 US Gallon Fuel Tank
Capacity
Welded C-Channel Frame
Rear Hitch Accepts 2 Quik-Tatch

Weights
Electric Mower/Implement PTO
Drive Clutch
Foot Pedal Deck and Implement
Lift System
Heavy Duty CargO Mount System
*Engine HP is Provided by the
Engine Manufacturer to be
Used
for Comparison Purposes Only,

Actual Operating HP will be

Less. Refer to the Engine
Manufacturer's Web Site for
Additional Information

CODE	ATTACHMENT IDENTIFIER	DESCRIPTION	SUGGESTED LIST PRICE USD ($)

Select One Code From Each Required Category

Select Series X300

F.O.B. Janesville, Wisconsin

470JM	Select Series X300 Tractor Less Deck	2,499.00

DESTINATION

0202	United States and Canada	In Base Price
0230	Australia and New Zealand	Same Price
0195	Mexico	Same Price
0250	Other	Same Price

ATTACHMENTS FOR FIELD CONVERSION

Select Series X300 Tractor Less Deck
Continued

CODE	ATTACHMENT IDENTIFIER	DESCRIPTION	SUGGESTED LIST PRICE USD ($)
		ATTACHMENTS FOR FIELD CONVERSION Continued...	
		Blades:	
	SKU23044	44 In. Front Blade (X300) *Rear Weights and Tire Chains are Recommended for Additional Traction*	547.00
		Engine:	
	AM135845	Spark Arrester Muffler Screen (X300s, X500 M-Ts)	See Parts
		FRONT MOUNTED THATCHERS:	
	TY13056	38 In. Front Thatcher (Center) *Requires Mounting Frame.*	216.14
	TY13036	8 In. Front Thatcher (Extension)	53.50
	BM24000	Thatcher Mounting Frame (X300, X500 M-T)	203.30
		Material Collection System Hoppers:	
	BM21679	7 Bushel Hopper Assembly *Requires Appropriate Rear Bagger Chute Front. Ballast Recommended, Especially on Hills or Inclines.*	433.36
	AM135486	Loose knit bags for 7 bu. Hopper	See Parts
		Material Collection System Power Flow Blowers:	
	BM22696	48C/48X High-Performance Blower Assembly for Mowers with Rotateable Anti-Scalp Wheels (X300/X500 M-T/X700) *For use with MY2006 X320 (Serial 010001-040000), X324 (Serial) 010001-040000), Model X500 M-T Tractor (Serial 010001-020000), MY2008 X320 (Serial 085001-), MY2008 X324 (Serial 085001-) MY2008 X500 (Serial 030001-) and X360. Also for use with SKU21895 (48X with Rotateable Anti-Scalp Wheels) Cartoned Deck.*	541.41
		Material Collection System Power Flow/Rear Bagger Chutes:	
	BM21681	Power Flow Chute (7 bu.) *For 48C, 48X, 54C or 54X Series Blowers.*	114.49
	BM20982	Rear Bagger Chute for 38 In. Mowers	73.83
	BM22594	Rear Bagger Chute for 42 In. Mowers	90.96
		Miscellaneous:	
	AM136716	12 Volt Outlet Kit (X300)	See Parts
	BM17981	12 Volt Work Light Kit	51.36
	TY25866	Battery Charger and Maintainer	See Parts
	BM23057	Brush Guard (X300, X500 M-T)	124.11
	BM23056	Bumper (X300s, X500, X530, X534)	62.06
	TY25341	Debris bag	See Parts
	M88984	Drift Blade *For Snow Blowers. Requires (2) 19H1914 Bolts and (2) N10217 Lock Nuts.*	See Parts
	TY27534	Fuel Protect for Gasoline Engines (8 oz.)	See Parts

Select Series X300 Tractor Less Deck
Continued

CODE	ATTACHMENT IDENTIFIER	DESCRIPTION	SUGGESTED LIST PRICE USD ($)
		ATTACHMENTS FOR FIELD CONVERSION Continued...	
	LG256	Home Maintenance Kit *For use with MY2006-2010 (Serial 010001-180000).*	See Parts
	LG265	Home Maintenance Kit *For use with MY2011- (Serial 180001-).*	See Parts
	AM132109	Rubber Blade Squeegee Kit	See Parts
	AM136046	Seat Net Kit	See Parts
	AM122263	Skid Shoe, Heavy Duty Left Hand (1) *For Snow Blower.*	See Parts
	AM122264	Skid Shoe, Heavy Duty Right Hand (1) *For Snow Blower.*	See Parts
	M157831	Skid shoe, Plastic (1) *For 44-, 47-, and 54-in. Snow Blowers. Two required.*	See Parts
	M115237	Spacer	See Parts
	BM23054	Sun Shade (X300/X500 M-T)	161.57
	AM141153	Wheel Cover, 6 In. (Stainless Steel)	See Parts
	AM141154	Wheel Cover, 8 In. (Stainless Steel)	See Parts
		Mower Deck and Mower Deck Attachments:	
	SKU24192	38 in Edge Xtra Deck (38X)	600.00
	SKU24194	42 In. Edge Mulch Deck (42M) *Also order AM136646 Lift Assist Spring Kit when used on X300-38, X300-42X, X300-Less deck, X304-42X, X300-42X or with MY2006-MY2009 (Serial 010001-150,000) X300-42M tractors.*	700.00
	SKU24195	48 in Edge Xtra Deck with Rotateable Anti-Scalp Wheels (48X)	1,000.00
	BM22550	Anti-Scalp Wheel Extension Kit *For use with MY2007 X320 (Serial 040001-085000), X324 (Serial 040001-085000), and the Model X500 M-T Tractor (Serial 020001-030000). Also for use with non-current SKU22194 (48X with Non-Rotateable Anti-Scalp Wheels) Cartoned Deck.*	57.79
	M154062	Blade (42X, Bagging, Starlock)	See Parts
	M127673	Blade (48C/48X, Mulching)	See Parts
	M145476	Blade (48C/48X, Side Discharge)	See Parts
	AM141040	Blade Kit (38X, Mulching)	See Parts
	AM141039	Blade Kit (38X, Side Discharge Kit)	See Parts
	AM140332	Blade Kit (42M, Mulching Low Lift)	See Parts
	AM140973	Blade Kit (42M, Mulching)	See Parts

Select Series X300 Tractor Less Deck
Continued

CODE	ATTACHMENT IDENTIFIER	DESCRIPTION	SUGGESTED LIST PRICE USD ($)
		ATTACHMENTS FOR FIELD CONVERSION Continued...	
	AM141034	Blade Kit (42X, Bagging)	See Parts
	AM141033	Blade Kit (42X, Mulching)	See Parts
	AM141032	Blade Kit (42X, Side Discharge)	See Parts
	AM141041	Blade, Kit (38X) Bagging	See Parts
	BM20505	Front Blowout Baffle for 42 In. Mower (42C/42X)	38.51
	BM19894	Leaf Bagging Kit (48C/48X Mower) *Contains Three Bolt-on Deck Lips for Improved Bagging of Leaves.*	99.51
	AM130907	Mower Deck Leveling Gauge	See Parts
	AM108476	Mower Deck Wear Plate (38 In. Mower)	See Parts
	M150883	Mower Leaf Mulcher Plate Assembly (38/38X)	See Parts
	AM103851	Mower Lip Kit (Left), 38 In. Mower	See Parts
	AM103852	Mower Lip Kit (Right Rear), 38 In. Mower	See Parts
	BM21817	Mulch Kit (38 In. or 38X) *For 2 Spindle Mowers*	131.61
	BM21816	Mulch Kit (42 In. or 42X)	99.51
	BM20007	Mulch Kit (48C/48X)	157.29
		Order Zone:	
	LP23117	125 lb. Electric Broadcast Spreader Barrier Shield	In Catalog
	LP3301	125 lb. Select Series Mounted Electric Broadcast Spreader *Requires Front Wheel Weights or Front Weight Bracket and 2 weights.*	In Catalog
	LP22861	25-gal. Mounted Sprayer *Tractors equipped with this sprayer require installation of the mid-mount mower, a front attachment, four front suitcase weights, or two front wheel weights.*	In Catalog
	LP40000	40-In. Tractor Shovel	In Catalog
	LP1001	42-In. Tractor Grass Groomer	In Catalog
	LP1002	48-In. / 54-In. Tractor Grass Groomer	In Catalog
	LPJD400	Bucket (5 gallon)	In Catalog
	JD01673	Bucket (6 gallon with lid)	In Catalog
	LPJD301	Bucket Holder (Double)	In Catalog
	LPJD100	Bucket Holder (Single)	In Catalog
	LP33711	Electric Lift Kit *For Snow Blower and Front Blade.*	In Catalog

Select Series X300 Tractor Less Deck
Continued

CODE	ATTACHMENT IDENTIFIER	DESCRIPTION	SUGGESTED LIST PRICE USD ($)
		ATTACHMENTS FOR FIELD CONVERSION Continued...	
	LP33712	Manual Angling Kit (44 in Front Blade X300s)	In Catalog
	LP93617	Riding Mower Deluxe Cover (M)	In Catalog
	LP93917	Riding Mower Standard Cover	In Catalog
		Protection:	
	LP92624	Seat Cover (Deluxe Medium) - Yellow	In Catalog
	LP92324	Seat Cover - Yellow	In Catalog
		Seats / Wheels / Tires:	
	TY16200	Tire Chains (Pair) for 20x10-8, 20x10-10	See Parts
		Snow Blowers:	
	SKU23045	44 In. Snow Blower (X300's, X500, X520) *Rear Weights and Tire Chains are Recommended for Additional Traction. Winter Grill Cover Recommended on Air-cooled Engines to Prevent Carburetor Icing. X300, X304 Tractors Shipped less deck or with 38X, 42X or 42M (SN -150000) Decks need to also Order AM136646 Lift Assist Spring Kit.*	1,555.00
	AM136646	Lift Assist Spring Kit	See Parts
	AM136691	Winter Grill Cover *Used on X300s, MY2007- Model X500 (serial 020001-), X530, and MY2011- X534 (serial 060001-).*	See Parts
		Weights:	
	R66949	Quik-Tatch Weight, 42 Lb. *Use up to 2 Weights on the rear of X300 Series Tractors*	62.06
	BM23621	Weight Bracket, Front (X300/X500 M-T) *Allows installation of R66949 Quik-Tatch Weights. Used on X300s, MY2007- Model X500 (serial 020001-), X530, and MY2011- X534 (serial 060001-).*	58.86
	BM17962	Wheel Weight (Cast Iron, Front, 34 Lb., 5 or 6 in wheel) *Requires BM17978 Mounting Hardware.*	133.76
	BM17978	Wheel Weight Mounting Hardware (1) for Attaching Front Wheel Weight	10.70

SERVICE CONTRACTS - RESIDENTIAL OWNERS/USE

Visit http://www.JohnDeere.com/ServicePlans for more information on John Deere Service Contracts. May not be Available in Parts of the U.S., Not Available in Canada. Price may vary due to driving distance and/or time from machine to dealership location.

	John Deere Extended Service Plan - 5-Year Option *5-year extended service plan. (1- year of extended service protection); 5-years of warranty transportation.*	399.99
	John Deere Extended Service Plan - 6-Year Option *6-year extended service plan. (2- years of extended service protection); 6-years of warranty transportation.*	529.99

Select Series X304 Tractor with 4 Wheel Steer and 42X Edge Xtra Deck

Equipment for Base Machine

Exclusive Air Intake System
V-Twin Engine
Overhead Valves
Hemispheric Cylinder Head
V-Valve Technology
Cast Iron Cylinder Liners
Full Pressure Lubrication with Replaceable Oil Filter
18.5 HP
42 IN. EDGE XTRA CUTTING SYSTEM
Two .67 In. StarLock Greaseable Spindles
Two Front 2.6 In. Wide Anti-Scalp Wheels
4 Point Mounting
Adjustable Down Stop
.25 In. Cut Height Increments
1 to 4 In. Cutting Heights
On Board Leveling Gauge
Exact Adjust Leveling Ports
16 In. Uncut Circle Radius
TIRES
15x6-6 Front Turf Tires
20x10-10 Rear Turf Tires
STEERING
4 Wheel Low Effort Steering System
15 In. Turning Radius
Cast Iron Front Axle with Replaceable Metal Bushings
.75 In. Front Spindles
AUTOMATIC (HYDROSTATIC) TRANSMISSION
Twin Touch Foot control
Tuff-Torque k46 Transaxle
Internal Wet Disk Brakes
Tow valve
5.5 mph (8.9 km/h) Forward, 4.0 mph (6.4 km/h) Reverse Travel Speed
Cruise Control
OPERATOR STATION
14 In. Steering Wheel
15 In. Open Back Seat with Access
Grip, 7 In. Fore-Aft Adjustment and Adjustable Suspension
Cup Holder
ELECTRICAL SYSTEM
195 CCA Battery
15 Amp Regulated Charging System
Four-Position Key Switch with Headlight Switch
Hour Meter
Seat/PTO Interlock Switches
Reverse Implement Option
MISCELLANEOUS
3.3 US Gallon Fuel Tank Capacity
Welded C-Channel Frame
Optional Rear Weight Bracket
Accepts 2 Quick Tatch Weights
Electric Mower/Implement PTO Drive Clutch
Foot Pedal Deck and Implement Lift System
Heavy Duty CargO Mount System
*Engine HP is Provided by the Engine Manufacturer to be Used for Comparison Purposes Only, Actual Operating HP will be Less. Refer to the Engine Manufacturer's Web Site for Additional Information

CODE	ATTACHMENT IDENTIFIER	DESCRIPTION	SUGGESTED LIST PRICE USD ($)

Select One Code From Each Required Category

Select Series X304

F.O.B. Janesville, Wisconsin

4717M		Select Series X304 Tractor with 4 Wheel Steer and 42X Edge Xtra Deck	3,799.00

DESTINATION

0202		United States and Canada	In Base Price
0230		Australia and New Zealand	Same Price
0195		Mexico	Same Price
0250		Other	Same Price

ATTACHMENTS FOR FIELD CONVERSION

		Blades:	
	SKU23044	44 In. Front Blade (X300) *Rear Weights and Tire Chains are Recommended for Additional Traction*	547.00
		Engine:	
	AM135845	Spark Arrester Muffler Screen (X300s, X500 M-Ts)	See Parts

Select Series X304 Tractor with 4 Wheel Steer and 42X Edge Xtra Deck
Continued

CODE	ATTACHMENT IDENTIFIER	DESCRIPTION	SUGGESTED LIST PRICE USD ($)
		ATTACHMENTS FOR FIELD CONVERSION Continued...	
		FRONT MOUNTED THATCHERS:	
	TY13056	38 In. Front Thatcher (Center) *Requires Mounting Frame.*	216.14
	TY13036	8 In. Front Thatcher (Extension)	53.50
	BM24000	Thatcher Mounting Frame (X300, X500 M-T)	203.30
		Material Collection System Hoppers:	
	BM21679	7 Bushel Hopper Assembly *Requires Appropriate Rear Bagger Chute Front. Ballast Recommended, Especially on Hills or Inclines.*	433.36
	AM135486	Loose knit bags for 7 bu. Hopper	See Parts
		Material Collection System Power Flow/Rear Bagger Chutes:	
	BM22594	Rear Bagger Chute for 42 In. Mowers	90.96
		Miscellaneous:	
	AM136716	12 Volt Outlet Kit (X300)	See Parts
	BM17981	12 Volt Work Light Kit	51.36
	TY25866	Battery Charger and Maintainer	See Parts
	BM23057	Brush Guard (X300, X500 M-T)	124.11
	BM23056	Bumper (X300s, X500, X530, X534)	62.06
	TY25341	Debris bag	See Parts
	M88984	Drift Blade *For Snow Blowers. Requires (2) 19H1914 Bolts and (2) N10217 Lock Nuts.*	See Parts
	TY27534	Fuel Protect for Gasoline Engines (8 oz.)	See Parts
	LG256	Home Maintenance Kit *For use with MY2006-2010 (Serial 010001-180000).*	See Parts
	LG265	Home Maintenance Kit *For use with MY2011- (Serial 180001-).*	See Parts
	AM132109	Rubber Blade Squeegee Kit	See Parts
	AM136046	Seat Net Kit	See Parts
	AM122263	Skid Shoe, Heavy Duty Left Hand (1) *For Snow Blower.*	See Parts
	AM122264	Skid Shoe, Heavy Duty Right Hand (1) *For Snow Blower.*	See Parts
	M157831	Skid shoe, Plastic (1) *For 44-, 47-, and 54-in. Snow Blowers. Two required.*	See Parts
	M115237	Spacer	See Parts

Select Series X304 Tractor with 4 Wheel Steer and 42X Edge Xtra Deck
Continued

CODE	ATTACHMENT IDENTIFIER	DESCRIPTION	SUGGESTED LIST PRICE USD ($)
		ATTACHMENTS FOR FIELD CONVERSION Continued...	
	BM23054	Sun Shade (X300/X500 M-T)	161.57
	AM141155	Wheel Cover, 10 In. (Stainless Steel)	See Parts
	AM141153	Wheel Cover, 6 In. (Stainless Steel)	See Parts
		Mower Deck and Mower Deck Attachments:	
	SKU24193	42 In. Edge Xtra Deck (42X)	600.00
	BM22550	Anti-Scalp Wheel Extension Kit *For use with MY2007 X320 (Serial 040001-085000), X324 (Serial 040001-085000), and the Model X500 M-T Tractor (Serial 020001-030000). Also for use with non-current SKU22194 (48X with Non-Rotateable Anti-Scalp Wheels) Cartoned Deck.*	57.79
	AM141034	Blade Kit (42X, Bagging)	See Parts
	AM141033	Blade Kit (42X, Mulching)	See Parts
	AM141032	Blade Kit (42X, Side Discharge)	See Parts
	BM20505	Front Blowout Baffle for 42 In. Mower (42C/42X)	38.51
	AM130907	Mower Deck Leveling Gauge	See Parts
	BM21816	Mulch Kit (42 In. or 42X)	99.51
		Order Zone:	
	LP23117	125 lb. Electric Broadcast Spreader Barrier Shield	In Catalog
	LP3301	125 lb. Select Series Mounted Electric Broadcast Spreader	In Catalog
	LP22861	25-gal. Mounted Sprayer *Tractors equipped with this sprayer require installation of the mid-mount mower, a front attachment, four front suitcase weights, or two front wheel weights.*	In Catalog
	LP40000	40-In. Tractor Shovel	In Catalog
	LP1001	42-In. Tractor Grass Groomer	In Catalog
	LPJD400	Bucket (5 gallon)	In Catalog
	JD01673	Bucket (6 gallon with lid)	In Catalog
	LPJD301	Bucket Holder (Double)	In Catalog
	LP33711	Electric Lift Kit *For Snow Blower and Front Blade.*	In Catalog
	LP33712	Manual Angling Kit (44 in Front Blade X300s)	In Catalog
	LP93617	Riding Mower Deluxe Cover (M)	In Catalog
	LP93917	Riding Mower Standard Cover	In Catalog

Select Series X304 Tractor with 4 Wheel Steer and 42X Edge Xtra Deck
Continued

CODE	ATTACHMENT IDENTIFIER	DESCRIPTION	SUGGESTED LIST PRICE USD ($)
		ATTACHMENTS FOR FIELD CONVERSION Continued...	
		Protection:	
	LP92624	Seat Cover (Deluxe Medium) - Yellow	In Catalog
	LP92324	Seat Cover - Yellow	In Catalog
		Seats / Wheels / Tires:	
	TY16200	Tire Chains (Pair) for 20x10-8, 20x10-10	See Parts
		Snow Blowers:	
	SKU23045	44 In. Snow Blower (X300's, X500, X520) *Rear Weights and Tire Chains are Recommended for Additional Traction. Winter Grill Cover Recommended on Air-cooled Engines to Prevent Carburetor Icing. X300, X304 Tractors Shipped less deck or with 38X, 42X or 42M (SN -150000) Decks need to also Order AM136646 Lift Assist Spring Kit.*	1,555.00
	AM136646	Lift Assist Spring Kit	See Parts
	AM136691	Winter Grill Cover *Used on X300s, MY2007- Model X500 (serial 020001-), X530, and MY2011- X534 (serial 060001-).*	See Parts
		Weights:	
	R66949	Quik-Tatch Weight, 42 Lb. *Use up to 2 Weights on the rear of X300 Series Tractors*	62.06
	BM23621	Weight Bracket, Front (X300/X500 M-T) *Allows installation of R66949 Quik-Tatch Weights. Used on X300s, MY2007- Model X500 (serial 020001-), X530, and MY2011- X534 (serial 060001-).*	58.86
	BM24011	Weight Bracket, Rear (X304, X324, X534) *Allows installation of R66949 Quik-Tatch Weights*	87.74
	BM17962	Wheel Weight (Cast Iron, Front, 34 Lb., 5 or 6 in wheel) *Requires BM17978 Mounting Hardware.*	133.76
	BM17978	Wheel Weight Mounting Hardware (1) for Attaching Front Wheel Weight	10.70
		SERVICE CONTRACTS - RESIDENTIAL OWNERS/USE	
		Visit http://www.JohnDeere.com/ServicePlans for more information on John Deere Service Contracts. May not be Available in Parts of the U.S., Not Available in Canada. Price may vary due to driving distance and/or time from machine to dealership location.	
		John Deere Extended Service Plan - 5-Year Option *5-year extended service plan. (1- year of extended service protection); 5-years of warranty transportation.*	399.99
		John Deere Extended Service Plan - 6-Year Option *6-year extended service plan. (2- years of extended service protection); 6-years of warranty transportation.*	529.99

Select Series X310 Tractor with 42X Edge Xtra Deck

Equipment for Base Machine

Exclusive Air Intake System
V-Twin Engine
Overhead Valves
Hemispheric Cylinder Head
V-Valve Technology
Cast Iron Cylinder Liners
Full Pressure Lubrication with Replaceable Oil Filter
*18.5 HP
42 IN. EDGE XTRA CUTTING SYSTEM
Two .67 In. StarLock Greaseable Spindles
Two Front 2.6 In. Wide Anti-Scalp Wheels
4 Point Mounting
Adjustable Down Stop
.25 In. Cut Height Increments
1 to 4 In. Cutting Heights
On Board Leveling Gauge
Exact Adjust Leveling Ports
31.6 in Uncut Circle Radius
TIRES
15x6-6 Front Turf Tires
20x10-8 Rear Turf Tires
STEERING
2 Wheel Low Effort Steering System
Hydraulic Power Steering
22 In. Turning Radius
Cast Iron Front Axle with Replaceable Metal Bushings .75 In. Front Spindles
AUTOMATIC (HYDROSTATIC) TRANSMISSION
Twin Touch Foot control
Tuff-Torque K58 H Transaxle
Internal Wet Disk Brakes
Tow valve
5.8 mph (9.3 km/h) Forward, 3.5 mph (5.6km/h) Reverse Travel Speed
Cruise Control
OPERATOR STATION
14 In. Steering Wheel
15 In. Open Back Seat with Access
Grip, 7 In. Fore-Aft Adjustment and Adjustable Suspension
Cup Holder
ELECTRICAL SYSTEM
195 CCA Battery
15 Amp Regulated Charging System
Four-Position Key Switch with Headlight Switch
Hour Meter
Seat/PTO Interlock Switches
Reverse Implement Option
MISCELLANEOUS
3.3 US Gallon Fuel Tank Capacity
Welded C-Channel Frame
Rear Hitch Accepts 2 Quik-Tatch Weights
Electric Mower/Implement PTO Drive Clutch
Hydraulic Power Deck and Implement Lift System
Heavy Duty CargO Mount System
*Engine HP is Provided by the Engine Manufacturer to be Used for Comparison Purposes Only, Actual Operating HP will be Less. Refer to the Engine Manufacturer's Web Site for Additional Information

CODE	ATTACHMENT IDENTIFIER	DESCRIPTION	SUGGESTED LIST PRICE USD ($)

Select One Code From Each Required Category

Select Series X310 - 42X

F.O.B. Janesville, Wisconsin

4790M		Select Series X310 Tractor with 42X Edge Xtra Deck	3,999.00

DESTINATION

0202		United States and Canada	In Base Price
0230		Australia and New Zealand	Same Price
0195		Mexico	Same Price
0250		Other	Same Price

ATTACHMENTS FOR FIELD CONVERSION

		Blades:	
	SKU23044	44 In. Front Blade (X300) *Rear Weights and Tire Chains are Recommended for Additional Traction*	547.00
		Engine:	
	AM135845	Spark Arrester Muffler Screen (X300s, X500 M-Ts)	See Parts

Select Series X310 Tractor with 42X Edge Xtra Deck
Continued

CODE	ATTACHMENT IDENTIFIER	DESCRIPTION	SUGGESTED LIST PRICE USD ($)
		ATTACHMENTS FOR FIELD CONVERSION Continued...	
		FRONT MOUNTED THATCHERS:	
	TY13056	38 In. Front Thatcher (Center) *Requires Mounting Frame.*	216.14
	TY13036	8 In. Front Thatcher (Extension)	53.50
	BM24000	Thatcher Mounting Frame (X300, X500 M-T)	203.30
		Material Collection System Hoppers:	
	BM21679	7 Bushel Hopper Assembly *Requires Appropriate Rear Bagger Chute Front. Ballast Recommended, Especially on Hills or Inclines.*	433.36
	AM135486	Loose knit bags for 7 bu. Hopper	See Parts
		Material Collection System Power Flow/Rear Bagger Chutes:	
	BM22594	Rear Bagger Chute for 42 In. Mowers	90.96
		Miscellaneous:	
	AM136716	12 Volt Outlet Kit (X300)	See Parts
	BM17981	12 Volt Work Light Kit	51.36
	TY25866	Battery Charger and Maintainer	See Parts
	BM23057	Brush Guard (X300, X500 M-T)	124.11
	BM23056	Bumper (X300s, X500, X530, X534)	62.06
	TY25341	Debris bag	See Parts
	M88984	Drift Blade *For Snow Blowers. Requires (2) 19H1914 Bolts and (2) N10217 Lock Nuts.*	See Parts
	TY27534	Fuel Protect for Gasoline Engines (8 oz.)	See Parts
	LG256	Home Maintenance Kit *For use with MY2006-2010 (Serial 010001-180000).*	See Parts
	LG265	Home Maintenance Kit *For use with MY2011- (Serial 180001-).*	See Parts
	AM132109	Rubber Blade Squeegee Kit	See Parts
	AM136046	Seat Net Kit	See Parts
	AM122263	Skid Shoe, Heavy Duty Left Hand (1) *For Snow Blower.*	See Parts
	AM122264	Skid Shoe, Heavy Duty Right Hand (1) *For Snow Blower.*	See Parts
	M157831	Skid shoe, Plastic (1) *For 44-, 47-, and 54-in. Snow Blowers. Two required.*	See Parts
	M115237	Spacer	See Parts

Select Series X310 Tractor with 42X Edge Xtra Deck
Continued

CODE	ATTACHMENT IDENTIFIER	DESCRIPTION	SUGGESTED LIST PRICE USD ($)
		ATTACHMENTS FOR FIELD CONVERSION Continued...	
	BM23054	Sun Shade (X300/X500 M-T)	161.57
	AM141153	Wheel Cover, 6 In. (Stainless Steel)	See Parts
	AM141154	Wheel Cover, 8 In. (Stainless Steel)	See Parts
		Mower Deck and Mower Deck Attachments:	
	BM22550	Anti-Scalp Wheel Extension Kit *For use with MY2007 X320 (Serial 040001-085000), X324 (Serial 040001-085000), and the Model X500 M-T Tractor (Serial 020001-030000). Also for use with non-current SKU22194 (48X with Non-Rotateable Anti-Scalp Wheels) Cartoned Deck.*	57.79
	AM141034	Blade Kit (42X, Bagging)	See Parts
	AM141033	Blade Kit (42X, Mulching)	See Parts
	AM141032	Blade Kit (42X, Side Discharge)	See Parts
	BM20505	Front Blowout Baffle for 42 In. Mower (42C/42X)	38.51
	AM130907	Mower Deck Leveling Gauge	See Parts
	BM21816	Mulch Kit (42 In. or 42X)	99.51
		Order Zone:	
	LP23117	125 lb. Electric Broadcast Spreader Barrier Shield	In Catalog
	LP3301	125 lb. Select Series Mounted Electric Broadcast Spreader *Requires Front Wheel Weights or Front Weight Bracket and 2 weights.*	In Catalog
	LP22861	25-gal. Mounted Sprayer *Tractors equipped with this sprayer require installation of the mid-mount mower, a front attachment, four front suitcase weights, or two front wheel weights.*	In Catalog
	LP40000	40-In. Tractor Shovel	In Catalog
	LP1001	42-In. Tractor Grass Groomer	In Catalog
	LPJD400	Bucket (5 gallon)	In Catalog
	JD01673	Bucket (6 gallon with lid)	In Catalog
	LPJD301	Bucket Holder (Double)	In Catalog
	LPJD100	Bucket Holder (Single)	In Catalog
	LP33711	Electric Lift Kit *For Snow Blower and Front Blade.*	In Catalog
	LP33712	Manual Angling Kit (44 in Front Blade X300s)	In Catalog
	LP93617	Riding Mower Deluxe Cover (M)	In Catalog
	LP93917	Riding Mower Standard Cover	In Catalog
		Protection:	

Select Series X310 Tractor with 42X Edge Xtra Deck
Continued

CODE	ATTACHMENT IDENTIFIER	DESCRIPTION	SUGGESTED LIST PRICE USD ($)
		ATTACHMENTS FOR FIELD CONVERSION Continued...	
	LP92624	Seat Cover (Deluxe Medium) - Yellow	In Catalog
	LP92324	Seat Cover - Yellow	In Catalog
		Seats / Wheels / Tires:	
	TY16200	Tire Chains (Pair) for 20x10-8, 20x10-10	See Parts
		Snow Blowers:	
	SKU23045	44 In. Snow Blower (X300's, X500, X520) *Rear Weights and Tire Chains are Recommended for Additional Traction. Winter Grill Cover Recommended on Air-cooled Engines to Prevent Carburetor Icing. X300, X304 Tractors Shipped less deck or with 38X, 42X or 42M (SN -150000) Decks need to also Order AM136646 Lift Assist Spring Kit.*	1,555.00
	AM136646	Lift Assist Spring Kit	See Parts
	AM136691	Winter Grill Cover *Used on X300s, MY2007- Model X500 (serial 020001-), X530, and MY2011- X534 (serial 060001-).*	See Parts
		Weights:	
	R66949	Quik-Tatch Weight, 42 Lb. *Use up to 2 Weights on the rear of X300 Series Tractors*	62.06
	BM23621	Weight Bracket, Front (X300/X500 M-T) *Allows installation of R66949 Quik-Tatch Weights. Used on X300s, MY2007- Model X500 (serial 020001-), X530, and MY2011- X534 (serial 060001-).*	58.86
	BM17962	Wheel Weight (Cast Iron, Front, 34 Lb., 5 or 6 in wheel) *Requires BM17978 Mounting Hardware.*	133.76
	BM17978	Wheel Weight Mounting Hardware (1) for Attaching Front Wheel Weight	10.70

SERVICE CONTRACTS - RESIDENTIAL OWNERS/USE

Visit http://www.JohnDeere.com/ServicePlans for more information on John Deere Service Contracts. May not be Available in Parts of the U.S., Not Available in Canada. Price may vary due to driving distance and/or time from machine to dealership location.

	John Deere Extended Service Plan - 5-Year Option *5-year extended service plan. (1- year of extended service protection); 5-years of warranty transportation.*	399.99
	John Deere Extended Service Plan - 6-Year Option *6-year extended service plan. (2- years of extended service protection); 6-years of warranty transportation.*	529.99

Select Series X320 Tractor with 48X Edge Xtra Deck

Equipment for Base Machine

Exclusive Air Intake System
V-Twin Engine
Overhead Valves
Hemispheric Cylinder Head
V-Valve Technology
Cast Iron Cylinder Liners
Full Pressure Lubrication with Replaceable Oil Filter
*22 HP
48 IN. EDGE XTRA CUTTING SYSTEM
Three .79 In. Greaseable Spindles
Two Front and Two Rear 2.6 In. Wide Rotateable Anti-Scalp Wheels
No Tools Anti-Scalp Wheel Cut Height Adjustment
Two 2.9 In Wide Front Anti-Scalp Rollers
4 Point Mounting
Adjustable Down Stop
.25 In. Cut Height Increments
1 to 4 In. Cutting Heights
On Board Leveling Gauge
Exact Adjust Leveling Ports
21 In. Uncut Circle Radius
TIRES
15x6.5-8 Front Turf Tires
22x11-10 Rear Turf Tires
STEERING
2 Wheel Low Effort Steering System
16 In. Turning Radius
Cast Iron Front Axle with Replaceable Metal Bushings
.75 In. Front Spindles
AUTOMATIC (HYDROSTATIC) TRANSMISSION
Twin Touch Foot control
Tuff-Torque K58 Transaxle
Internal Wet Disk Brakes
Tow valve
6.2 mph (10 km/hr) Forward, 3.5 mph (5.6 km/h) Reverse Travel Speed
Cruise Control
OPERATOR STATION
14 In. Steering Wheel
15 In. Open Back Seat with Access
Grip, 7 In. Fore-Aft Adjustment and Adjustable Suspension
Cup Holder
ELECTRICAL SYSTEM
195 CCA Battery
15 Amp Regulated Charging System
Four-Position Key Switch with Headlight Switch
Hour Meter
Seat/PTO Interlock Switches
Reverse Implement Option
MISCELLANEOUS
3.3 US Gallon Fuel Tank Capacity
Low-Fuel Light
Welded C-Channel Frame
Rear Hitch Accepts 2 Quik-Tatch Weights
Electric Mower/Implement PTO Drive Clutch
Foot Pedal Deck and Implement Lift System
Adjustable Lift Assist Spring
Heavy Duty CargO Mount System
*Engine HP is Provided by the Engine Manufacturer to be Used for Comparison Purposes Only, Actual Operating HP will be Less. Refer to the Engine Manufacturer's Web Site for Additional Information

CODE	ATTACHMENT IDENTIFIER	DESCRIPTION	SUGGESTED LIST PRICE USD ($)

Select One Code From Each Required Category

Select Series X320 - 48X

F.O.B. Janesville, Wisconsin

472DM		Select Series X320 Tractor with 48X Edge Xtra Deck	4,299.00

DESTINATION

0202		United States and Canada	In Base Price
0230		Australia and New Zealand	Same Price
0195		Mexico	Same Price
0250		Other	Same Price

ATTACHMENTS FOR FIELD CONVERSION

		Blades:	
	SKU23044	44 In. Front Blade (X300) *Rear Weights and Tire Chains are Recommended for Additional Traction*	547.00
		Engine:	
	AM135845	Spark Arrester Muffler Screen (X300s, X500 M-Ts)	See Parts

Select Series X320 Tractor with 48X Edge Xtra Deck
Continued

CODE	ATTACHMENT IDENTIFIER	DESCRIPTION	SUGGESTED LIST PRICE USD ($)
		ATTACHMENTS FOR FIELD CONVERSION Continued...	
		FRONT MOUNTED THATCHERS:	
	TY13056	38 In. Front Thatcher (Center) *Requires Mounting Frame.*	216.14
	TY13036	8 In. Front Thatcher (Extension)	53.50
	BM24000	Thatcher Mounting Frame (X300, X500 M-T)	203.30
		Material Collection System Hoppers:	
	BM21679	7 Bushel Hopper Assembly *Requires Appropriate Rear Bagger Chute Front. Ballast Recommended, Especially on Hills or Inclines.*	433.36
	AM135486	Loose knit bags for 7 bu. Hopper	See Parts
		Material Collection System Power Flow Blowers:	
	BM22696	48C/48X High-Performance Blower Assembly for Mowers with Rotateable Anti-Scalp Wheels (X300/X500 M-T/X700) *For use with MY2006 X320 (Serial 010001-040000), X324 (Serial) 010001-040000), Model X500 M-T Tractor (Serial 010001-020000), MY2008 X320 (Serial 085001-), MY2008 X324 (Serial 085001-) MY2008 X500 (Serial 030001-) and X360. Also for use with SKU21895 (48X with Rotateable Anti-Scalp Wheels) Cartoned Deck.*	541.41
	BM22144	48X HP Power Flow Blower Assembly for 48X Mower with Non-Rotateable Anti-Scalp Wheels (X300/X500 M-T) *For use with MY2007 X320 (Serial 040001-085000), X324 (Serial 040001-085000), and the Model X500 M-T Tractor (Serial 020001-030000). Also for use with non-current SKU22194 (48X with Non-Rotateable Anti-Scalp Wheels) Cartoned Deck.*	541.41
		Material Collection System Power Flow/Rear Bagger Chutes:	
	BM21681	Power Flow Chute (7 bu.) *For 48C, 48X, 54C or 54X Series Blowers.*	114.49
		Miscellaneous:	
	AM136716	12 Volt Outlet Kit (X300)	See Parts
	BM17981	12 Volt Work Light Kit	51.36
	TY25866	Battery Charger and Maintainer	See Parts
	BM23057	Brush Guard (X300, X500 M-T)	124.11
	BM23056	Bumper (X300s, X500, X530, X534)	62.06
	TY25341	Debris bag	See Parts
	M88984	Drift Blade *For Snow Blowers. Requires (2) 19H1914 Bolts and (2) N10217 Lock Nuts.*	See Parts
	TY27534	Fuel Protect for Gasoline Engines (8 oz.)	See Parts
	LG249	Home Maintenance Kit *Fits 2010 and earlier models only (Serial-180000).*	See Parts

Select Series X320 Tractor with 48X Edge Xtra Deck
Continued

CODE	ATTACHMENT IDENTIFIER	DESCRIPTION	SUGGESTED LIST PRICE USD ($)
		ATTACHMENTS FOR FIELD CONVERSION Continued...	
	LG265	Home Maintenance Kit *For use with MY2011- (Serial 180001-).*	See Parts
	AM132109	Rubber Blade Squeegee Kit	See Parts
	AM136046	Seat Net Kit	See Parts
	AM122263	Skid Shoe, Heavy Duty Left Hand (1) *For Snow Blower.*	See Parts
	AM122264	Skid Shoe, Heavy Duty Right Hand (1) *For Snow Blower.*	See Parts
	M157831	Skid shoe, Plastic (1) *For 44-, 47-, and 54-in. Snow Blowers. Two required.*	See Parts
	M115237	Spacer	See Parts
	BM23054	Sun Shade (X300/X500 M-T)	161.57
	TY24327	Tire Chains for 22x11-10 In. Turf Tires	See Parts
	AM141155	Wheel Cover, 10 In. (Stainless Steel)	See Parts
	AM141154	Wheel Cover, 8 In. (Stainless Steel)	See Parts
		Mower Deck and Mower Deck Attachments:	
	SKU24195	48 in Edge Xtra Deck with Rotateable Anti-Scalp Wheels (48X)	1,000.00
	M127673	Blade (48C/48X, Mulching)	See Parts
	M145476	Blade (48C/48X, Side Discharge)	See Parts
	BM19894	Leaf Bagging Kit (48C/48X Mower) *Contains Three Bolt-on Deck Lips for Improved Bagging of Leaves.*	99.51
	AM130907	Mower Deck Leveling Gauge	See Parts
	BM20007	Mulch Kit (48C/48X)	157.29
		Order Zone:	
	LP23117	125 lb. Electric Broadcast Spreader Barrier Shield	In Catalog
	LP3301	125 lb. Select Series Mounted Electric Broadcast Spreader *Requires Front Wheel Weights or Front Weight Bracket and 2 weights.*	In Catalog
	LP22861	25-gal. Mounted Sprayer *Tractors equipped with this sprayer require installation of the mid-mount mower, a front attachment, four front suitcase weights, or two front wheel weights.*	In Catalog
	LP40000	40-In. Tractor Shovel	In Catalog
	LP1002	48-In. / 54-In. Tractor Grass Groomer	In Catalog
	LPJD400	Bucket (5 gallon)	In Catalog
	JD01673	Bucket (6 gallon with lid)	In Catalog

Select Series X320 Tractor with 48X Edge Xtra Deck
Continued

CODE	ATTACHMENT IDENTIFIER	DESCRIPTION	SUGGESTED LIST PRICE USD ($)
		ATTACHMENTS FOR FIELD CONVERSION Continued...	
	LPJD301	Bucket Holder (Double)	In Catalog
	LPJD100	Bucket Holder (Single)	In Catalog
	LP33711	Electric Lift Kit *For Snow Blower and Front Blade.*	In Catalog
	LP33712	Manual Angling Kit (44 in Front Blade X300s)	In Catalog
	LP93617	Riding Mower Deluxe Cover (M)	In Catalog
	LP93917	Riding Mower Standard Cover	In Catalog
		Protection:	
	LP92624	Seat Cover (Deluxe Medium) - Yellow	In Catalog
	LP92324	Seat Cover - Yellow	In Catalog
		Snow Blowers:	
	SKU23045	44 In. Snow Blower (X300's, X500, X520)	1,555.00
	AM136691	Winter Grill Cover *Used on X300s, MY2007- Model X500 (serial 020001-), X530, and MY2011- X534 (serial 060001-).*	See Parts
		Weights:	
	R66949	Quik-Tatch Weight, 42 Lb. *Use up to 2 Weights on the rear of X300 Series Tractors*	62.06
	BM23621	Weight Bracket, Front (X300/X500 M-T) *Allows installation of R66949 Quik-Tatch Weights.* *Used on X300s, MY2007- Model X500 (serial 020001-), X530, and MY2011- X534 (serial 060001-).*	58.86
	BM17964	Wheel Weight (Cast Iron, Front, 30 Lb. 8 In.) *For Use on Steered Wheel.*	101.66
	BM17978	Wheel Weight Mounting Hardware (1) for Attaching Front Wheel Weight	10.70

SERVICE CONTRACTS - RESIDENTIAL OWNERS/USE

Visit http://www.JohnDeere.com/ServicePlans for more information on John Deere Service Contracts. May not be Available in Parts of the U.S., Not Available in Canada. Price may vary due to driving distance and/or time from machine to dealership location.

	John Deere Extended Service Plan - 5-Year Option *5-year extended service plan. (1- year of extended service protection); 5-years of warranty transportation.*	399.99
	John Deere Extended Service Plan - 6-Year Option *6-year extended service plan. (2- years of extended service protection); 6-years of warranty transportation.*	529.99

Select Series X320 Tractor with 54X Edge Xtra Deck

Equipment for Base Machine

Exclusive Air Intake System
V-Twin Engine
Overhead Valves
Hemispheric Cylinder Head
V-Valve Technology
Cast Iron Cylinder Liners
Full Pressure Lubrication with Replaceable Oil Filter
*22 HP
54 IN. EDGE XTRA CUTTING SYSTEM
Three .79 In. Greaseable Spindles
Two Front and Two Rear 2.6 In. Wide Rotateable Anti-Scalp Wheels
No Tools Anti-Scalp Wheel Cut Height Adjustment
Two 2.9 In Wide Front Anti-Scalp Rollers
4 Point Mounting
Adjustable Down Stop
.25 In. Cut Height Increments
1 to 4 In. Cutting Heights
On Board Leveling Gauge
Exact Adjust Leveling Ports
18 In. Uncut Circle Radius
TIRES
15x6.5-8 Front Turf Tires
22x11-10 Rear Turf Tires
STEERING
2 Wheel Low Effort Steering System
16 In. Turning Radius
Cast Iron Front Axle with Replaceable Metal Bushings
.75 In. Front Spindles
AUTOMATIC (HYDROSTATIC) TRANSMISSION
Twin Touch Foot control
Tuff-Torque K58 Transaxle
Internal Wet Disk Brakes
Tow valve
6.2 mph (10 km/hr) Forward, 3.5 mph (5.6 km/h) Reverse Travel Speed
Cruise Control
OPERATOR STATION
14 In. Steering Wheel
15 In. Open Back Seat with Access
Grip, 7 In. Fore-Aft Adjustment and Adjustable Suspension
Cup Holder
ELECTRICAL SYSTEM
195 CCA Battery
15 Amp Regulated Charging System
Four-Position Key Switch with Headlight switch
Hour Meter
Seat/PTO Interlock Switches
Reverse Implement Option
MISCELLANEOUS
3.3 US Gallon Fuel Tank Capacity
Low-Fuel Light
Welded C-Channel Frame
Rear Hitch Accepts 2 Quik-Tatch Weights
Electric Mower/Implement PTO Drive Clutch
Foot Pedal Deck and Implement Lift System
Adjustable Lift Assist Spring
Heavy Duty CargO Mount System
*Engine HP is Provided by the Engine Manufacturer to be Used for Comparison Purposes Only, Actual Operating HP will be Less. Refer to the Engine Manufacturer's Web Site for Additional Information

CODE	ATTACHMENT IDENTIFIER	DESCRIPTION	SUGGESTED LIST PRICE USD ($)

Select One Code From Each Required Category

Select Series X320 - 54X

F.O.B. Janesville, Wisconsin

472EM		Select Series X320 Tractor with 54X Edge Xtra Deck	4,599.00

DESTINATION

0202		United States and Canada	In Base Price
0230		Australia and New Zealand	Same Price
0195		Mexico	Same Price
0250		Other	Same Price

ATTACHMENTS FOR FIELD CONVERSION

		Blades:	
	SKU23044	44 In. Front Blade (X300) *Rear Weights and Tire Chains are Recommended for Additional Traction*	547.00
		Engine:	
	AM135845	Spark Arrester Muffler Screen (X300s, X500 M-Ts)	See Parts

Select Series X320 Tractor with 54X Edge Xtra Deck
Continued

CODE	ATTACHMENT IDENTIFIER	DESCRIPTION	SUGGESTED LIST PRICE USD ($)
		ATTACHMENTS FOR FIELD CONVERSION Continued...	
		FRONT MOUNTED THATCHERS:	
	TY13056	38 In. Front Thatcher (Center) *Requires Mounting Frame.*	216.14
	TY13036	8 In. Front Thatcher (Extension)	53.50
	BM24000	Thatcher Mounting Frame (X300, X500 M-T)	203.30
		Material Collection System Hoppers:	
	BM21679	7 Bushel Hopper Assembly *Requires Appropriate Rear Bagger Chute Front. Ballast Recommended, Especially on Hills or Inclines.*	433.36
	AM135486	Loose knit bags for 7 bu. Hopper	See Parts
		Material Collection System Power Flow Blowers:	
	BM22697	54C/54X/54D High-Performance Blower Assembly (X300/X500 M-T/X700, 1023E, 1025R, 1026R, 2305, 2025R, 2320, 2210 and 4115)	541.41
		Material Collection System Power Flow/Rear Bagger Chutes:	
	BM21681	Power Flow Chute (7 bu.) *For 48C, 48X, 54C or 54X Series Blowers.*	114.49
		Miscellaneous:	
	AM136716	12 Volt Outlet Kit (X300)	See Parts
	BM17981	12 Volt Work Light Kit	51.36
	TY25866	Battery Charger and Maintainer	See Parts
	BM23057	Brush Guard (X300, X500 M-T)	124.11
	BM23056	Bumper (X300s, X500, X530, X534)	62.06
	TY25341	Debris bag	See Parts
	M88984	Drift Blade *For Snow Blowers. Requires (2) 19H1914 Bolts and (2) N10217 Lock Nuts.*	See Parts
	TY27534	Fuel Protect for Gasoline Engines (8 oz.)	See Parts
	LG249	Home Maintenance Kit *Fits 2010 and earlier models only (Serial-180000).*	See Parts
	LG265	Home Maintenance Kit *For use with MY2011- (Serial 180001-).*	See Parts
	AM132109	Rubber Blade Squeegee Kit	See Parts
	AM136046	Seat Net Kit	See Parts
	AM122263	Skid Shoe, Heavy Duty Left Hand (1) *For Snow Blower.*	See Parts
	AM122264	Skid Shoe, Heavy Duty Right Hand (1) *For Snow Blower.*	See Parts

Select Series X320 Tractor with 54X Edge Xtra Deck
Continued

CODE	ATTACHMENT IDENTIFIER	DESCRIPTION	SUGGESTED LIST PRICE USD ($)
		ATTACHMENTS FOR FIELD CONVERSION Continued...	
	M157831	Skid shoe, Plastic (1) *For 44-, 47-, and 54-in. Snow Blowers. Two required.*	See Parts
	M115237	Spacer	See Parts
	BM23054	Sun Shade (X300/X500 M-T)	161.57
	TY24327	Tire Chains for 22x11-10 In. Turf Tires	See Parts
	AM141155	Wheel Cover, 10 In. (Stainless Steel)	See Parts
	AM141154	Wheel Cover, 8 In. (Stainless Steel)	See Parts
		Mower Deck and Mower Deck Attachments:	
	SKU21897	54 in Edge Xtra Deck (54X)	1,300.00
	M152726	Blade (54C/54X, High Lift)	See Parts
	M145516	Blade (54C/54X, Mulching)	See Parts
	M143520	Blade (54C/54X, Side Discharge)	See Parts
	BM20985	Leaf Bagging Kit (54C/54X Mower)	124.11
	AM130907	Mower Deck Leveling Gauge	See Parts
	BM20827	Mulch Kit (54C/54D/54X)	212.93
		Order Zone:	
	LP23117	125 lb. Electric Broadcast Spreader Barrier Shield	In Catalog
	LP3301	125 lb. Select Series Mounted Electric Broadcast Spreader *Requires Front Wheel Weights or Front Weight Bracket and 2 weights.*	In Catalog
	LP22861	25-gal. Mounted Sprayer *Tractors equipped with this sprayer require installation of the mid-mount mower, a front attachment, four front suitcase weights, or two front wheel weights.*	In Catalog
	LP40000	40-In. Tractor Shovel	In Catalog
	LP1002	48-In. / 54-In. Tractor Grass Groomer	In Catalog
	LPJD400	Bucket (5 gallon)	In Catalog
	JD01673	Bucket (6 gallon with lid)	In Catalog
	LPJD301	Bucket Holder (Double)	In Catalog
	LPJD100	Bucket Holder (Single)	In Catalog
	LP33711	Electric Lift Kit *For Snow Blower and Front Blade.*	In Catalog
	LP33712	Manual Angling Kit (44 in Front Blade X300s)	In Catalog
	LP93617	Riding Mower Deluxe Cover (M)	In Catalog

Select Series X320 Tractor with 54X Edge Xtra Deck
Continued

CODE	ATTACHMENT IDENTIFIER	DESCRIPTION	SUGGESTED LIST PRICE USD ($)
		ATTACHMENTS FOR FIELD CONVERSION Continued...	
	LP93917	Riding Mower Standard Cover	In Catalog
		Protection:	
	LP92624	Seat Cover (Deluxe Medium) - Yellow	In Catalog
	LP92324	Seat Cover - Yellow	In Catalog
		Snow Blowers:	
	SKU23045	44 In. Snow Blower (X300's, X500, X520)	1,555.00
	AM136691	Winter Grill Cover *Used on X300s, MY2007- Model X500 (serial 020001-), X530, and MY2011- X534 (serial 060001-).*	See Parts
		Weights:	
	R66949	Quik-Tatch Weight, 42 Lb. *Use up to 2 Weights on the rear of X300 Series Tractors*	62.06
	BM23621	Weight Bracket, Front (X300/X500 M-T) *Allows installation of R66949 Quik-Tatch Weights.* *Used on X300s, MY2007- Model X500 (serial 020001-), X530, and MY2011- X534 (serial 060001-).*	58.86
	BM17964	Wheel Weight (Cast Iron, Front, 30 Lb. 8 In.) *For Use on Steered Wheel.*	101.66
	BM17978	Wheel Weight Mounting Hardware (1) for Attaching Front Wheel Weight	10.70
		SERVICE CONTRACTS - RESIDENTIAL OWNERS/USE	
		Visit http://www.JohnDeere.com/ServicePlans for more information on John Deere Service Contracts. May not be Available in Parts of the U.S., Not Available in Canada. Price may vary due to driving distance and/or time from machine to dealership location.	
		John Deere Extended Service Plan - 5-Year Option *5-year extended service plan. (1- year of extended service protection); 5-years of warranty transportation.*	399.99
		John Deere Extended Service Plan - 6-Year Option *6-year extended service plan. (2- years of extended service protection); 6-years of warranty transportation.*	529.99

Select Series X324 Tractor with 4 Wheel Steer and 48X Edge Xtra Deck

Equipment for Base Machine

Exclusive Air Intake System
V-Twin Engine
Overhead Valves
Hemispheric Cylinder Head
V-Valve Technology
Cast Iron Cylinder Liners
Full Pressure Lubrication with Replaceable Oil Filter
*22 HP
48 IN. EDGE XTRA CUTTING SYSTEM
Three .79 In. Greaseable Spindles
Two Front and Two Rear 2.6 In. Wide Rotateable Anti-Scalp Wheels
No Tools Anti-Scalp Wheel Cut Height Adjustment
Two 2.9 In Wide Front Anti-Scalp Rollers
4 Point Mounting
Adjustable Down Stop
.25 In. Cut Height Increments
1 to 4 In. Cutting Heights
On Board Leveling Gauge
Exact Adjust Leveling Ports
9 In. Uncut Circle Radius
TIRES
15x6-6 Front Turf Tires
20x10-10 Rear Turf Tires
STEERING
4 Wheel Low Effort Steering System
15 In. Turning Radius
Cast Iron Front Axle with Replaceable Metal Bushings
.75 In. Front Spindles
AUTOMATIC (HYDROSTATIC) TRANSMISSION
Twin Touch Foot control
Tuff-Torque K58 Transaxle
Internal Wet Disk Brakes
Tow valve
5.9 mph (9.5 km/hr) Forward, 3.5mph (5.6 km/h) Reverse Travel Speed
Cruise Control
OPERATOR STATION
14 In. Steering Wheel
15 In. Open Back Seat with Access
Grip, 7 In. Fore-Aft Adjustment and Adjustable Suspension
Cup Holder
ELECTRICAL SYSTEM
195 CCA Battery
15 Amp Regulated Charging System
Four-Position Key Switch with Headlight Switch
Hour Meter
Seat/PTO Interlock Switches
Reverse Implement Option
MISCELLANEOUS
3.3 US Gallon Fuel Tank Capacity
Low-Fuel Light
Welded C-Channel Frame
Optional Rear Weight Bracket
Accepts 2 Quick Tatch Weights
Electric Mower/Implement
PTO Drive Clutch
Foot Pedal Deck and Implement Lift System
Adjustable Lift Assist Spring
Heavy Duty CargO Mount System
*Engine HP is Provided by the Engine Manufacturer to be Used for Comparison Purposes Only, Actual Operating HP will be Less. Refer to the Engine Manufacturer's Web Site for Additional Information

CODE	ATTACHMENT IDENTIFIER	DESCRIPTION	SUGGESTED LIST PRICE USD ($)

Select One Code From Each Required Category

Select Series X324

F.O.B. Janesville, Wisconsin

4736M		Select Series X324 Tractor with 4 Wheel Steer and 48X Edge Xtra Deck	4,799.00

DESTINATION

0202		United States and Canada	In Base Price
0230		Australia and New Zealand	Same Price
0195		Mexico	Same Price
0250		Other	Same Price

ATTACHMENTS FOR FIELD CONVERSION

		Blades:	
	SKU23044	44 In. Front Blade (X300) *Rear Weights and Tire Chains are Recommended for Additional Traction*	547.00
		Engine:	
	AM135845	Spark Arrester Muffler Screen (X300s, X500 M-Ts)	See Parts

Select Series X324 Tractor with 4 Wheel Steer and 48X Edge Xtra Deck
Continued

CODE	ATTACHMENT IDENTIFIER	DESCRIPTION	SUGGESTED LIST PRICE USD ($)
		ATTACHMENTS FOR FIELD CONVERSION Continued...	
		FRONT MOUNTED THATCHERS:	
	TY13056	38 In. Front Thatcher (Center) *Requires Mounting Frame.*	216.14
	TY13036	8 In. Front Thatcher (Extension)	53.50
	BM24000	Thatcher Mounting Frame (X300, X500 M-T)	203.30
		Material Collection System Hoppers:	
	BM21679	7 Bushel Hopper Assembly *Requires Appropriate Rear Bagger Chute Front. Ballast Recommended, Especially on Hills or Inclines.*	433.36
	AM135486	Loose knit bags for 7 bu. Hopper	See Parts
		Material Collection System Power Flow Blowers:	
	BM22696	48C/48X High-Performance Blower Assembly for Mowers with Rotateable Anti-Scalp Wheels (X300/X500 M-T/X700) *For use with MY2006 X320 (Serial 010001-040000), X324 (Serial) 010001-040000), Model X500 M-T Tractor (Serial 010001-020000), MY2008 X320 (Serial 085001-), MY2008 X324 (Serial 085001-) MY2008 X500 (Serial 030001-) and X360. Also for use with SKU21895 (48X with Rotateable Anti-Scalp Wheels) Cartoned Deck.*	541.41
	BM22144	48X HP Power Flow Blower Assembly for 48X Mower with Non-Rotateable Anti-Scalp Wheels (X300/X500 M-T) *For use with MY2007 X320 (Serial 040001-085000), X324 (Serial 040001-085000), and the Model X500 M-T Tractor (Serial 020001-030000). Also for use with non-current SKU22194 (48X with Non-Rotateable Anti-Scalp Wheels) Cartoned Deck.*	541.41
		Material Collection System Power Flow/Rear Bagger Chutes:	
	BM21681	Power Flow Chute (7 bu.) *For 48C, 48X, 54C or 54X Series Blowers.*	114.49
		Miscellaneous:	
	AM136716	12 Volt Outlet Kit (X300)	See Parts
	BM17981	12 Volt Work Light Kit	51.36
	TY25866	Battery Charger and Maintainer	See Parts
	BM23057	Brush Guard (X300, X500 M-T)	124.11
	BM23056	Bumper (X300s, X500, X530, X534)	62.06
	TY25341	Debris bag	See Parts
	M88984	Drift Blade *For Snow Blowers. Requires (2) 19H1914 Bolts and (2) N10217 Lock Nuts.*	See Parts
	TY27534	Fuel Protect for Gasoline Engines (8 oz.)	See Parts
	LG249	Home Maintenance Kit *Fits 2010 and earlier models only (Serial-180000).*	See Parts

Select Series X324 Tractor with 4 Wheel Steer and 48X Edge Xtra Deck
Continued

CODE	ATTACHMENT IDENTIFIER	DESCRIPTION	SUGGESTED LIST PRICE USD ($)
		ATTACHMENTS FOR FIELD CONVERSION Continued...	
	LG265	Home Maintenance Kit *For use with MY2011- (Serial 180001-).*	See Parts
	AM132109	Rubber Blade Squeegee Kit	See Parts
	AM136046	Seat Net Kit	See Parts
	AM122263	Skid Shoe, Heavy Duty Left Hand (1) *For Snow Blower.*	See Parts
	AM122264	Skid Shoe, Heavy Duty Right Hand (1) *For Snow Blower.*	See Parts
	M157831	Skid shoe, Plastic (1) *For 44-, 47-, and 54-in. Snow Blowers. Two required.*	See Parts
	M115237	Spacer	See Parts
	BM23054	Sun Shade (X300/X500 M-T)	161.57
	AM141155	Wheel Cover, 10 In. (Stainless Steel)	See Parts
	AM141153	Wheel Cover, 6 In. (Stainless Steel)	See Parts
		Mower Deck and Mower Deck Attachments:	
	SKU24195	48 in Edge Xtra Deck with Rotateable Anti-Scalp Wheels (48X)	1,000.00
	M127673	Blade (48C/48X, Mulching)	See Parts
	M145476	Blade (48C/48X, Side Discharge)	See Parts
	BM19894	Leaf Bagging Kit (48C/48X Mower) *Contains Three Bolt-on Deck Lips for Improved Bagging of Leaves.*	99.51
	AM130907	Mower Deck Leveling Gauge	See Parts
	BM20007	Mulch Kit (48C/48X)	157.29
		Order Zone:	
	LP23117	125 lb. Electric Broadcast Spreader Barrier Shield	In Catalog
	LP3301	125 lb. Select Series Mounted Electric Broadcast Spreader *Requires Front Wheel Weights or Front Weight Bracket and 2 weights.*	In Catalog
	LP22861	25-gal. Mounted Sprayer *Tractors equipped with this sprayer require installation of the mid-mount mower, a front attachment, four front suitcase weights, or two front wheel weights.*	In Catalog
	LP40000	40-In. Tractor Shovel	In Catalog
	LP1002	48-In. / 54-In. Tractor Grass Groomer	In Catalog
	LPJD400	Bucket (5 gallon)	In Catalog
	JD01673	Bucket (6 gallon with lid)	In Catalog
	LPJD301	Bucket Holder (Double)	In Catalog

Select Series X324 Tractor with 4 Wheel Steer and 48X Edge Xtra Deck
Continued

CODE	ATTACHMENT IDENTIFIER	DESCRIPTION	SUGGESTED LIST PRICE USD ($)
		ATTACHMENTS FOR FIELD CONVERSION Continued...	
	LP33711	Electric Lift Kit *For Snow Blower and Front Blade.*	In Catalog
	LP33712	Manual Angling Kit (44 in Front Blade X300s)	In Catalog
	LP93617	Riding Mower Deluxe Cover (M)	In Catalog
	LP93917	Riding Mower Standard Cover	In Catalog
		Protection:	
	LP92624	Seat Cover (Deluxe Medium) - Yellow	In Catalog
	LP92324	Seat Cover - Yellow	In Catalog
		Seats / Wheels / Tires:	
	TY16200	Tire Chains (Pair) for 20x10-8, 20x10-10	See Parts
		Snow Blowers:	
	SKU23045	44 In. Snow Blower (X300's, X500, X520)	1,555.00
	AM136691	Winter Grill Cover *Used on X300s, MY2007- Model X500 (serial 020001-), X530, and MY2011- X534 (serial 060001-).*	See Parts
		Weights:	
	R66949	Quik-Tatch Weight, 42 Lb. *Use up to 2 Weights on the rear of X300 Series Tractors*	62.06
	BM23621	Weight Bracket, Front (X300/X500 M-T) *Allows installation of R66949 Quik-Tatch Weights.* *Used on X300s, MY2007- Model X500 (serial 020001-), X530, and MY2011- X534 (serial 060001-).*	58.86
	BM24011	Weight Bracket, Rear (X304, X324, X534) *Allows installation of R66949 Quik-Tatch Weights*	87.74
	BM17962	Wheel Weight (Cast Iron, Front, 34 Lb., 5 or 6 in wheel) *Requires BM17978 Mounting Hardware.*	133.76
	BM17978	Wheel Weight Mounting Hardware (1) for Attaching Front Wheel Weight	10.70
		SERVICE CONTRACTS - RESIDENTIAL OWNERS/USE	
		Visit http://www.JohnDeere.com/ServicePlans for more information on John Deere Service Contracts. May not be Available in Parts of the U.S., Not Available in Canada. Price may vary due to driving distance and/or time from machine to dealership location.	
		John Deere Extended Service Plan - 5-Year Option *5-year extended service plan. (1- year of extended service protection); 5-years of warranty transportation.*	399.99
		John Deere Extended Service Plan - 6-Year Option *6-year extended service plan. (2- years of extended service protection); 6-years of warranty transportation.*	529.99

Select Series X360 Tractor with 48X Edge Xtra Deck

Equipment for Base Machine

Exclusive Air Intake System
V-Twin Engine
Overhead Valves
Hemispheric Cylinder Head
V-Valve Technology
Cast Iron Cylinder Liners
Full Pressure Lubrication with Replaceable Oil Filter
*22 HP
48 IN. EDGE XTRA CUTTING SYSTEM
Three .79 In. Greaseable Spindles
Two Front and Two Rear 2.6 In. Wide Rotateable Anti-Scalp Wheels
No Tools Anti-Scalp Wheel Cut Height Adjustment
Two 2.9 In Wide Front Anti-Scalp Rollers
4 Point Mounting
Adjustable Down Stop
.25 In. Cut Height Increments
1 to 4 In. Cutting Heights
On Board Leveling Gauge
Exact Adjust Leveling Ports
24 In. Uncut Circle Radius
TIRES
15x6.5-8 Front Turf Tires
22x11-10 Rear Turf Tires
STEERING
2 Wheel Low Effort Steering System
Hydraulic Power Steering
22 In. Turning Radius
Cast Iron Front Axle with Replaceable Metal Bushings
.75 In. Front Spindles
AUTOMATIC (HYDROSTATIC) TRANSMISSION
Twin Touch Foot control
Tuff-Torque K58 Transaxle
Internal Wet Disk Brakes
Tow valve
6.2 mph (10.0 km/h) Forward, 3.5mph (5.6 km/h) Reverse Travel Speed
Cruise Control
OPERATOR STATION
14 In. Steering Wheel
5-Position Tilt Steering Wheel
15 In. Open Back Seat with Access
Grip, 7 In. Fore-Aft Adjustment and Adjustable Suspension
Cup Holder
ELECTRICAL SYSTEM
195 CCA Battery
15 Amp Regulated Charging System
Four-Position Key Switch with Hour Meter
Seat/PTO Interlock Switches
Reverse Implement Option
MISCELLANEOUS
3.3 US Gallon Fuel Tank Capacity
Low-Fuel Light
Welded C-Channel Frame
Rear Hitch Accepts 2 Quik-Tatch Weights
Electric Mower/Implement PTO Drive Clutch
Hydraulic Power Deck and Implement Lift System
Heavy Duty CargO Mount System
*Engine HP is Provided by the Engine Manufacturer to be Used for Comparison Purposes Only, Actual Operating HP will be Less. Refer to the Engine Manufacturer's Web Site for Additional Information

CODE	ATTACHMENT IDENTIFIER	DESCRIPTION	SUGGESTED LIST PRICE USD ($)

Select One Code From Each Required Category

Select Series X360

F.O.B. Janesville, Wisconsin

9694M		Select Series X360 Tractor with 48X Edge Xtra Deck	5,299.00

DESTINATION

0202		United States and Canada	In Base Price
0230		Australia and New Zealand	Same Price
0195		Mexico	Same Price
0250		Other	Same Price

ATTACHMENTS FOR FIELD CONVERSION

		Blades:	
	SKU23044	44 In. Front Blade (X300) *Rear Weights and Tire Chains are Recommended for Additional Traction*	547.00
		Engine:	
	AM135845	Spark Arrester Muffler Screen (X300s, X500 M-Ts)	See Parts

Select Series X360 Tractor with 48X Edge Xtra Deck
Continued

CODE	ATTACHMENT IDENTIFIER	DESCRIPTION	SUGGESTED LIST PRICE USD ($)
		ATTACHMENTS FOR FIELD CONVERSION Continued...	
		FRONT MOUNTED THATCHERS:	
	TY13056	38 In. Front Thatcher (Center) *Requires Mounting Frame.*	216.14
	TY13036	8 In. Front Thatcher (Extension)	53.50
	BM24000	Thatcher Mounting Frame (X300, X500 M-T)	203.30
		Material Collection System Hoppers:	
	BM21679	7 Bushel Hopper Assembly *Requires Appropriate Rear Bagger Chute Front. Ballast Recommended, Especially on Hills or Inclines.*	433.36
	AM135486	Loose knit bags for 7 bu. Hopper	See Parts
		Material Collection System Power Flow Blowers:	
	BM22696	48C/48X High-Performance Blower Assembly for Mowers with Rotateable Anti-Scalp Wheels (X300/X500 M-T/X700) *For use with MY2006 X320 (Serial 010001-040000), X324 (Serial) 010001-040000), Model X500 M-T Tractor (Serial 010001-020000), MY2008 X320 (Serial 085001-), MY2008 X324 (Serial 085001-) MY2008 X500 (Serial 030001-) and X360. Also for use with SKU21895 (48X with Rotateable Anti-Scalp Wheels) Cartoned Deck.*	541.41
		Material Collection System Power Flow/Rear Bagger Chutes:	
	BM21681	Power Flow Chute (7 bu.) *For 48C, 48X, 54C or 54X Series Blowers.*	114.49
		Miscellaneous:	
	AM136716	12 Volt Outlet Kit (X300)	See Parts
	BM17981	12 Volt Work Light Kit	51.36
	TY25866	Battery Charger and Maintainer	See Parts
	BM23057	Brush Guard (X300, X500 M-T)	124.11
	BM23056	Bumper (X300s, X500, X530, X534)	62.06
	TY25341	Debris bag	See Parts
	M88984	Drift Blade *For Snow Blowers. Requires (2) 19H1914 Bolts and (2) N10217 Lock Nuts.*	See Parts
	TY27534	Fuel Protect for Gasoline Engines (8 oz.)	See Parts
	LG249	Home Maintenance Kit *Fits 2010 and earlier models only (Serial-180000).*	See Parts
	LG265	Home Maintenance Kit *For use with MY2011- (Serial 180001-).*	See Parts
	AM132109	Rubber Blade Squeegee Kit	See Parts
	AM136046	Seat Net Kit	See Parts

Select Series X360 Tractor with 48X Edge Xtra Deck
Continued

CODE	ATTACHMENT IDENTIFIER	DESCRIPTION	SUGGESTED LIST PRICE USD ($)
		ATTACHMENTS FOR FIELD CONVERSION Continued...	
	AM122263	Skid Shoe, Heavy Duty Left Hand (1) *For Snow Blower.*	See Parts
	AM122264	Skid Shoe, Heavy Duty Right Hand (1) *For Snow Blower.*	See Parts
	M157831	Skid shoe, Plastic (1) *For 44-, 47-, and 54-in. Snow Blowers. Two required.*	See Parts
	M115237	Spacer	See Parts
	BM23054	Sun Shade (X300/X500 M-T)	161.57
	TY24327	Tire Chains for 22x11-10 In. Turf Tires	See Parts
	AM141155	Wheel Cover, 10 In. (Stainless Steel)	See Parts
	AM141154	Wheel Cover, 8 In. (Stainless Steel)	See Parts
		Mower Deck and Mower Deck Attachments:	
	SKU24195	48 in Edge Xtra Deck with Rotateable Anti-Scalp Wheels (48X)	1,000.00
	M127673	Blade (48C/48X, Mulching)	See Parts
	M145476	Blade (48C/48X, Side Discharge)	See Parts
	BM19894	Leaf Bagging Kit (48C/48X Mower) *Contains Three Bolt-on Deck Lips for Improved Bagging of Leaves.*	99.51
	AM130907	Mower Deck Leveling Gauge	See Parts
	BM20007	Mulch Kit (48C/48X)	157.29
		Order Zone:	
	LP23117	125 lb. Electric Broadcast Spreader Barrier Shield	In Catalog
	LP3301	125 lb. Select Series Mounted Electric Broadcast Spreader *Requires Front Wheel Weights or Front Weight Bracket and 2 weights.*	In Catalog
	LP22861	25-gal. Mounted Sprayer *Tractors equipped with this sprayer require installation of the mid-mount mower, a front attachment, four front suitcase weights, or two front wheel weights.*	In Catalog
	LP40000	40-In. Tractor Shovel	In Catalog
	LP1002	48-In. / 54-In. Tractor Grass Groomer	In Catalog
	LPJD400	Bucket (5 gallon)	In Catalog
	JD01673	Bucket (6 gallon with lid)	In Catalog
	LPJD301	Bucket Holder (Double)	In Catalog
	LPJD100	Bucket Holder (Single)	In Catalog
	LP33711	Electric Lift Kit *For Snow Blower and Front Blade.*	In Catalog

Select Series X360 Tractor with 48X Edge Xtra Deck
Continued

CODE	ATTACHMENT IDENTIFIER	DESCRIPTION	SUGGESTED LIST PRICE USD ($)
		ATTACHMENTS FOR FIELD CONVERSION Continued...	
	LP33712	Manual Angling Kit (44 in Front Blade X300s)	In Catalog
	LP93617	Riding Mower Deluxe Cover (M)	In Catalog
	LP93917	Riding Mower Standard Cover	In Catalog
		Protection:	
	LP92624	Seat Cover (Deluxe Medium) - Yellow	In Catalog
	LP92324	Seat Cover - Yellow	In Catalog
		Snow Blowers:	
	SKU23045	44 In. Snow Blower (X300's, X500, X520)	1,555.00
	AM136691	Winter Grill Cover *Used on X300s, MY2007- Model X500 (serial 020001-), X530, and MY2011- X534 (serial 060001-).*	See Parts
		Weights:	
	R66949	Quik-Tatch Weight, 42 Lb. *Use up to 2 Weights on the rear of X300 Series Tractors*	62.06
	BM23621	Weight Bracket, Front (X300/X500 M-T) *Allows installation of R66949 Quik-Tatch Weights.* *Used on X300s, MY2007- Model X500 (serial 020001-), X530, and MY2011- X534 (serial 060001-).*	58.86
	BM17964	Wheel Weight (Cast Iron, Front, 30 Lb. 8 In.) *For Use on Steered Wheel.*	101.66
	BM17978	Wheel Weight Mounting Hardware (1) for Attaching Front Wheel Weight	10.70
		SERVICE CONTRACTS - RESIDENTIAL OWNERS/USE	
		Visit http://www.JohnDeere.com/ServicePlans for more information on John Deere Service Contracts. May not be Available in Parts of the U.S., Not Available in Canada. Price may vary due to driving distance and/or time from machine to dealership location.	
		John Deere Extended Service Plan - 5-Year Option *5-year extended service plan. (1- year of extended service protection); 5-years of warranty transportation.*	399.99
		John Deere Extended Service Plan - 6-Year Option *6-year extended service plan. (2- years of extended service protection); 6-years of warranty transportation.*	529.99

Select Series X300R Tractor with 42 In. Edge Xtra Rear Discharge Deck, California Model

Equipment for Base Machine

JOHN DEERE iTORQUE POWER SYSTEM
Exclusive Air Intake System
V-Twin Engine
Overhead Valves
Hemispheric Cylinder Head
V-Valve Technology
Cast Iron Cylinder Liners
Full Pressure Lubrication with Replaceable Oil Filter
Manufactured by Kawasaki
*18 HP
42 IN. EDGE XTRA REAR DISCHARGE CUTTING SYSTEM
Two .67 In. StarLock Greaseable Spindles
Two Front 2.6 In. Wide Anti-Scalp Wheels
Wash Ports
4 Point Mounting
Adjustable Down Stop
.25 In. Cut Height Increments
1 to 3.75 In. Cutting Heights
On Board Leveling Gauge
Exact Adjust Leveling Ports
29 In. Uncut Circle Radius
INTEGRATED COLLECTION SYSTEM
8.5 bu. (300 Liter) Collection Hopper
Turbostar Fan
Automatic PTO Shut Off/Hopper Full
TIRES
15x6-6 Front Turf Tires
20x10-8 Rear Turf Tires
STEERING
2 Wheel Low Effort Steering System
20 In. Turning Radius
Cast Iron Front Axle with Replaceable Metal Bushings
.75 In. Front Spindles
AUTOMATIC (HYDROSTATIC) TRANSMISSION
Twin Touch Foot Control
Tuff-Torque K46 Transaxle
Internal Wet Disk Brakes
Tow valve
5.3 mph (8.5 km/h) Forward, 4.0 mph (6.4 km/h) Reverse Travel Speed
Cruise Control
OPERATOR STATION
14 In. Steering Wheel
15 In. Open Back Seat with Access Grip, 7 In. Fore-Aft Adjustment and Adjustable Suspension
Cup Holder
ELECTRICAL SYSTEM
195 CCA Battery
15 Amp Regulated Charging System
Four-Position Key Switch with Headlight Switch
Hour Meter
Seat/PTO Interlock Switches
Reverse Implement Option
MISCELLANEOUS
2.0 US Gallon Fuel Tank Capacity
Welded C-Channel Frame
Electric Mower/Implement PTO Drive Clutch
Foot Pedal Deck and Implement Lift System
Adjustable Lift Assist Spring
*Engine HP is Provided by the Engine Manufacturer to be Used for Comparison Purposes Only, Actual Operating HP will be Less.

CODE	ATTACHMENT IDENTIFIER	DESCRIPTION	SUGGESTED LIST PRICE USD ($)

Select One Code From Each Required Category

Select Series X300R

F.O.B. Janesville, Wisconsin

4756M		Select Series X300R Tractor with 42 In. Edge Xtra Rear Discharge Deck, California Model	4,299.00

ATTACHMENTS FOR FIELD CONVERSION

		Blades:	
	SKU23044	44 In. Front Blade (X300) *Rear Weights and Tire Chains are Recommended for Additional Traction*	547.00
		Engine:	
	AM135845	Spark Arrester Muffler Screen (X300s, X500 M-Ts)	See Parts
		FRONT MOUNTED THATCHERS:	
	TY13056	38 In. Front Thatcher (Center) *Requires Mounting Frame.*	216.14
	TY13036	8 In. Front Thatcher (Extension)	53.50
	BM24000	Thatcher Mounting Frame (X300, X500 M-T)	203.30
		Miscellaneous:	

Select Series X300R Tractor with 42 In. Edge Xtra Rear Discharge Deck, California Model

Continued

CODE	ATTACHMENT IDENTIFIER	DESCRIPTION	SUGGESTED LIST PRICE USD ($)
		ATTACHMENTS FOR FIELD CONVERSION Continued...	
	AM136716	12 Volt Outlet Kit (X300)	See Parts
	TY25866	Battery Charger and Maintainer	See Parts
	BM23057	Brush Guard (X300, X500 M-T)	124.11
	BM23056	Bumper (X300s, X500, X530, X534)	62.06
	M88984	Drift Blade *For Snow Blowers. Requires (2) 19H1914 Bolts and (2) N10217 Lock Nuts.*	See Parts
	TY27534	Fuel Protect for Gasoline Engines (8 oz.)	See Parts
	LG256	Home Maintenance Kit *For use with MY2007-2009 (Serial 040001-150000).*	See Parts
	LG265	Home Maintenance Kit *For use with MY2010- (Serial 150001-).*	See Parts
	BM22196	Rear Deflector Kit (X300R)	123.06
	AM132109	Rubber Blade Squeegee Kit	See Parts
	AM136046	Seat Net Kit	See Parts
	AM122263	Skid Shoe, Heavy Duty Left Hand (1) *For Snow Blower.*	See Parts
	AM122264	Skid Shoe, Heavy Duty Right Hand (1) *For Snow Blower.*	See Parts
	M157831	Skid shoe, Plastic (1) *For 44-, 47-, and 54-in. Snow Blowers. Two required.*	See Parts
	M115237	Spacer	See Parts
	AM141153	Wheel Cover, 6 In. (Stainless Steel)	See Parts
	AM141154	Wheel Cover, 8 In. (Stainless Steel)	See Parts
		Mower Deck and Mower Deck Attachments:	
	AM140974	Blade Kit (X300R, Bagging and Rear Discharge)	See Parts
	AM140975	Blade Kit (X300R, Mulching)	See Parts
	AM130907	Mower Deck Leveling Gauge	See Parts
		Order Zone:	
	LP40000	40-In. Tractor Shovel	In Catalog
	LP33712	Manual Angling Kit (44 in Front Blade X300s)	In Catalog
		Protection:	
	LP92624	Seat Cover (Deluxe Medium) - Yellow	In Catalog

Select Series X300R Tractor with 42 In. Edge Xtra Rear Discharge Deck, California Model

Continued

CODE	ATTACHMENT IDENTIFIER	DESCRIPTION	SUGGESTED LIST PRICE USD ($)
		ATTACHMENTS FOR FIELD CONVERSION Continued...	
	LP92324	Seat Cover - Yellow	In Catalog
		Seats / Wheels / Tires:	
	BM19123	31 Lb. Plastic Rear Wheel Weights	65.27
	TY16200	Tire Chains (Pair) for 20x10-8, 20x10-10	See Parts
		Snow Blowers:	
	SKU23045	44 In. Snow Blower (X300's, X500, X520) *Rear Weights and Tire Chains are Recommended for Additional Traction. Winter Grill Cover Recommended on Air-cooled Engines to Prevent Carburetor Icing. Collection Hopper or a BM22196 Rear Deflector Kit are Required. For Snow Blowers built prior to April 2008 (Serial -030001) see DTAC Solution 79224 for Adaptation Instructions.*	1,555.00
	AM136691	Winter Grill Cover *Used on X300s and model X500 (serial 020001-), X530, and MY2011- X534 (serial 060001-).*	See Parts
		Weights:	
	R66949	Quik-Tatch Weight, 42 Lb.	62.06
	BM23621	Weight Bracket, Front (X300/X500 M-T) *Allows installation of up to four R66949 Quik-Tatch Weights on front of X300s.*	58.86
	BM17962	Wheel Weight (Cast Iron, Front, 34 Lb., 5 or 6 in wheel) *Requires BM17978 Mounting Hardware.*	133.76
	BM17978	Wheel Weight Mounting Hardware (1) for Attaching Front Wheel Weight	10.70
		SERVICE CONTRACTS - RESIDENTIAL OWNERS/USE	
		Visit http://www.JohnDeere.com/ServicePlans for more information on John Deere Service Contracts. May not be Available in Parts of the U.S., Not Available in Canada. Price may vary due to driving distance and/or time from machine to dealership location.	
		John Deere Extended Service Plan - 5-Year Option *5-year extended service plan. (1- year of extended service protection); 5-years of warranty transportation.*	399.99
		John Deere Extended Service Plan - 6-Year Option *6-year extended service plan. (2- years of extended service protection); 6-years of warranty transportation.*	529.99

Select Series X300 Tractor Less Deck, California Model

Equipment for Base Machine

JOHN DEERE iTORQUE POWER SYSTEM
Exclusive Air Intake System
V-Twin Engine
Overhead Valves
Hemispheric Cylinder Head
V-Valve Technology
Cast Iron Cylinder Liners
Full Pressure Lubrication with Replaceable Oil Filter
Manufactured by Kawasaki
*18 HP
LESS MOWER STANDARD
OPTIONAL 38 IN. or 42 IN. EDGE XTRA CUTTING SYSTEM or 42 IN. EDGE MULCH CUTTING SYSTEM
Two .67 In. StarLock Greaseable Spindles
Two Front 2.6 In. Wide Anti-Scalp Wheels
4 Point Mounting
Adjustable Down Stop
.25 In. Cut Height Increments
1 to 4 In. Cutting Heights
On Board Leveling Gauge
Exact Adjust Leveling Ports
28 In. Uncut Circle Radius (38X, 42X)
27 in Uncut Circle Radius (42 Edge Mulch)
Removable Material Gates with On Board Storage (42 Edge Mulch)
OPTIONAL 48 IN. EDGE XTRA CUTTING SYSTEM
Three .79 In. Greaseable Spindles
Two Front and Two Rear 2.6 In. Wide Rotateable Anti-Scalp Wheels
No Tools Anti-Scalp Wheel Cut Height Adjustment
Two 2.9 In Wide Front Anti-Scalp Rollers
4 Point Mounting
Adjustable Down Stop
.25 In. Cut Height Increments
1 to 4 In. Cutting Heights
On Board Leveling Gauge
Exact Adjust Leveling Ports
21 In. Uncut Circle Radius
TIRES
15x6-6 Front Turf Tires
20x10-8 Rear Turf Tires
STEERING
2 Wheel Low Effort Steering System
16 In. Turning Radius
Cast Iron Front Axle with Replaceable Metal Bushings
.75 In. Front Spindles
AUTOMATIC (HYDROSTATIC) TRANSMISSION
Twin Touch Foot control
Tuff-Torque K46 Transaxle
Internal Wet Disk Brakes
Tow valve
5.5 mph (8.9 km/h) Forward, 4.0 mph (6.4 km/h) Reverse Travel Speed
Cruise Control
OPERATOR STATION
14 In. Steering Wheel
15 In. Open Back Seat with Access Grip, 7 In. Fore-Aft Adjustment and Adjustable Suspension
Cup Holder
ELECTRICAL SYSTEM
195 CCA Battery
15 Amp Regulated Charging System
Four-Position Key Switch with Headlight Switch
Hour Meter
Seat/PTO Interlock Switches
Reverse Implement Option
MISCELLANEOUS
3.3 US Gallon Fuel Tank Capacity
Welded C-Channel Frame
Rear Hitch Accepts 2 Quik-Tatch Weights
Electric Mower/Implement PTO Drive Clutch
Foot Pedal Deck and Implement Lift System
Heavy Duty CargO Mount System
*Engine HP is Provided by the Engine Manufacturer to be Used for Comparison Purposes Only, Actual Operating HP will be Less.

CODE	ATTACHMENT IDENTIFIER	DESCRIPTION	SUGGESTED LIST PRICE USD ($)

Select One Code From Each Required Category

Select Series X300

F.O.B. Janesville, Wisconsin

470DM		Select Series X300 Tractor Less Deck, California Model	2,499.00

ATTACHMENTS FOR FIELD CONVERSION

		Blades:	
	SKU23044	44 In. Front Blade (X300) *Rear Weights and Tire Chains are Recommended for Additional Traction*	547.00
		Engine:	
	AM135845	Spark Arrester Muffler Screen (X300s, X500 M-Ts)	See Parts
		FRONT MOUNTED THATCHERS:	
	TY13056	38 In. Front Thatcher (Center) *Requires Mounting Frame.*	216.14

Select Series X300 Tractor Less Deck, California Model
Continued

CODE	ATTACHMENT IDENTIFIER	DESCRIPTION	SUGGESTED LIST PRICE USD ($)
		ATTACHMENTS FOR FIELD CONVERSION Continued...	
	TY13036	8 In. Front Thatcher (Extension)	53.50
	BM24000	Thatcher Mounting Frame (X300, X500 M-T)	203.30
		Material Collection System Hoppers:	
	BM21679	7 Bushel Hopper Assembly *Requires Appropriate Rear Bagger Chute Front. Ballast Recommended, Especially on Hills or Inclines.*	433.36
	AM135486	Loose knit bags for 7 bu. Hopper	See Parts
		Material Collection System Power Flow Blowers:	
	BM22696	48C/48X High-Performance Blower Assembly for Mowers with Rotateable Anti-Scalp Wheels (X300/X500 M-T/X700) *For use with MY2006 X320 (Serial 010001-040000), X324 (Serial) 010001-040000), Model X500 M-T Tractor (Serial 010001-020000), MY2008 X320 (Serial 085001-), MY2008 X324 (Serial 085001-) MY2008 X500 (Serial 030001-) and X360. Also for use with SKU21895 (48X with Rotateable Anti-Scalp Wheels) Cartoned Deck.*	541.41
		Material Collection System Power Flow/Rear Bagger Chutes:	
	BM21681	Power Flow Chute (7 bu.) *For 48C, 48X, 54C or 54X Series Blowers.*	114.49
	BM20982	Rear Bagger Chute for 38 In. Mowers	73.83
	BM22594	Rear Bagger Chute for 42 In. Mowers	90.96
		Miscellaneous:	
	AM136716	12 Volt Outlet Kit (X300)	See Parts
	BM17981	12 Volt Work Light Kit	51.36
	TY25866	Battery Charger and Maintainer	See Parts
	BM23057	Brush Guard (X300, X500 M-T)	124.11
	BM23056	Bumper (X300s, X500, X530, X534)	62.06
	TY25341	Debris bag	See Parts
	M88984	Drift Blade *For Snow Blowers. Requires (2) 19H1914 Bolts and (2) N10217 Lock Nuts.*	See Parts
	TY27534	Fuel Protect for Gasoline Engines (8 oz.)	See Parts
	LG256	Home Maintenance Kit *For use with MY2006-2010 (Serial 010001-180000).*	See Parts
	LG265	Home Maintenance Kit *For use with MY2011- (Serial 180001-).*	See Parts
	AM132109	Rubber Blade Squeegee Kit	See Parts
	AM136046	Seat Net Kit	See Parts

Select Series X300 Tractor Less Deck, California Model
Continued

CODE	ATTACHMENT IDENTIFIER	DESCRIPTION	SUGGESTED LIST PRICE USD ($)
		ATTACHMENTS FOR FIELD CONVERSION Continued...	
	AM122263	Skid Shoe, Heavy Duty Left Hand (1) *For Snow Blower.*	See Parts
	AM122264	Skid Shoe, Heavy Duty Right Hand (1) *For Snow Blower.*	See Parts
	M157831	Skid shoe, Plastic (1) *For 44-, 47-, and 54-in. Snow Blowers. Two required.*	See Parts
	M115237	Spacer	See Parts
	BM23054	Sun Shade (X300/X500 M-T)	161.57
	AM141153	Wheel Cover, 6 In. (Stainless Steel)	See Parts
	AM141154	Wheel Cover, 8 In. (Stainless Steel)	See Parts
		Mower Deck and Mower Deck Attachments:	
	SKU24192	38 in Edge Xtra Deck (38X) *Requires M156856 Right-Hand Lift Arm.*	600.00
	SKU24194	42 In. Edge Mulch Deck (42M) *Also order AM136646 Lift Assist Spring Kit when used on X300-38, X300-42X, X300-Less deck, X304-42X, X300-42X or with MY2006-MY2009 (Serial 010001-150,000) X300-42M tractors.*	700.00
	SKU24193	42 In. Edge Xtra Deck (42X)	600.00
	SKU24195	48 in Edge Xtra Deck with Rotateable Anti-Scalp Wheels (48X)	1,000.00
	BM22550	Anti-Scalp Wheel Extension Kit	57.79
	M154062	Blade (42X, Bagging, Starlock)	See Parts
	M127673	Blade (48C/48X, Mulching)	See Parts
	M145476	Blade (48C/48X, Side Discharge)	See Parts
	AM141040	Blade Kit (38X, Mulching)	See Parts
	AM141039	Blade Kit (38X, Side Discharge Kit)	See Parts
	AM140332	Blade Kit (42M, Mulching Low Lift)	See Parts
	AM140973	Blade Kit (42M, Mulching)	See Parts
	AM141034	Blade Kit (42X, Bagging)	See Parts
	AM141033	Blade Kit (42X, Mulching)	See Parts
	AM141032	Blade Kit (42X, Side Discharge)	See Parts
	AM141041	Blade, Kit (38X) Bagging	See Parts
	BM20505	Front Blowout Baffle for 42 In. Mower (42C/42X)	38.51

Select Series X300 Tractor Less Deck, California Model
Continued

CODE	ATTACHMENT IDENTIFIER	DESCRIPTION	SUGGESTED LIST PRICE USD ($)
		ATTACHMENTS FOR FIELD CONVERSION Continued...	
	BM19894	Leaf Bagging Kit (48C/48X Mower) *Contains Three Bolt-on Deck Lips for Improved Bagging of Leaves.*	99.51
	AM130907	Mower Deck Leveling Gauge	See Parts
	AM108476	Mower Deck Wear Plate (38 In. Mower)	See Parts
	M150883	Mower Leaf Mulcher Plate Assembly (38/38X)	See Parts
	AM103851	Mower Lip Kit (Left), 38 In. Mower	See Parts
	AM103852	Mower Lip Kit (Right Rear), 38 In. Mower	See Parts
	BM21817	Mulch Kit (38 In. or 38X) *For 2 Spindle Mowers*	131.61
	BM21816	Mulch Kit (42 In. or 42X)	99.51
	BM20007	Mulch Kit (48C/48X)	157.29
		Order Zone:	
	LP23117	125 lb. Electric Broadcast Spreader Barrier Shield	In Catalog
	LP3301	125 lb. Select Series Mounted Electric Broadcast Spreader *Requires Front Wheel Weights or Front Weight Bracket and 2 weights.*	In Catalog
	LP22861	25-gal. Mounted Sprayer *Tractors equipped with this sprayer require installation of the mid-mount mower, a front attachment, four front suitcase weights, or two front wheel weights.*	In Catalog
	LP40000	40-In. Tractor Shovel	In Catalog
	LP1001	42-In. Tractor Grass Groomer	In Catalog
	LP1002	48-In. / 54-In. Tractor Grass Groomer	In Catalog
	LPJD400	Bucket (5 gallon)	In Catalog
	JD01673	Bucket (6 gallon with lid)	In Catalog
	LPJD301	Bucket Holder (Double)	In Catalog
	LPJD100	Bucket Holder (Single)	In Catalog
	LP33711	Electric Lift Kit *For Snow Blower and Front Blade.*	In Catalog
	LP33712	Manual Angling Kit (44 in Front Blade X300s)	In Catalog
	LP93617	Riding Mower Deluxe Cover (M)	In Catalog
	LP93917	Riding Mower Standard Cover	In Catalog
		Protection:	
	LP92624	Seat Cover (Deluxe Medium) - Yellow	In Catalog

Select Series X300 Tractor Less Deck, California Model
Continued

CODE	ATTACHMENT IDENTIFIER	DESCRIPTION	SUGGESTED LIST PRICE USD ($)
		ATTACHMENTS FOR FIELD CONVERSION Continued...	
	LP92324	Seat Cover - Yellow	In Catalog
		Seats / Wheels / Tires:	
	TY16200	Tire Chains (Pair) for 20x10-8, 20x10-10	See Parts
		Snow Blowers:	
	SKU23045	44 In. Snow Blower (X300's, X500, X520) *Rear Weights and Tire Chains are Recommended for Additional Traction. Winter Grill Cover Recommended on Air-cooled Engines to Prevent Carburetor Icing. X300, X304 Tractors Shipped less deck or with 38X, 42X or 42M (SN -150000) Decks need to also Order AM136646 Lift Assist Spring Kit.*	1,555.00
	AM136646	Lift Assist Spring Kit	See Parts
	AM136691	Winter Grill Cover *Used on X300s and model X500 (serial 020001-), X530, and MY2011- X534 (serial 060001-).*	See Parts
		Weights:	
	R66949	Quik-Tatch Weight, 42 Lb. *Use up to 2 Weights on the rear of X300 Series Tractors*	62.06
	BM23621	Weight Bracket, Front (X300/X500 M-T) *Allows installation of up to four R66949 Quik-Tatch Weights on front of X300s.*	58.86
	BM17962	Wheel Weight (Cast Iron, Front, 34 Lb., 5 or 6 in wheel) *Requires BM17978 Mounting Hardware.*	133.76
	BM17978	Wheel Weight Mounting Hardware (1) for Attaching Front Wheel Weight	10.70
		SERVICE CONTRACTS - RESIDENTIAL OWNERS/USE	
		Visit http://www.JohnDeere.com/ServicePlans for more information on John Deere Service Contracts. May not be Available in Parts of the U.S., Not Available in Canada. Price may vary due to driving distance and/or time from machine to dealership location.	
		John Deere Extended Service Plan - 5-Year Option *5-year extended service plan. (1- year of extended service protection); 5-years of warranty transportation.*	399.99
		John Deere Extended Service Plan - 6-Year Option *6-year extended service plan. (2- years of extended service protection); 6-years of warranty transportation.*	529.99

Select Series X304 Tractor Less Deck, California Model

Equipment for Base Machine

JOHN DEERE iTORQUE POWER SYSTEM
Exclusive Air Intake System
V-Twin Engine
Overhead Valves
Hemispheric Cylinder Head
V-Valve Technology
Cast Iron Cylinder Liners
Full Pressure Lubrication with Replaceable Oil Filter
Manufactured by Kawasaki
*18 HP
LESS MOWER STANDARD
OPTIONAL 42 IN. EDGE XTRA CUTTING SYSTEM
Two .67 In. StarLock Greaseable Spindles
Two Front 2.6 In. Wide Anti-Scalp Wheels
4 Point Mounting
Adjustable Down Stop
.25 In. Cut Height Increments
1 to 4 In. Cutting Heights
On Board Leveling Gauge
Exact Adjust Leveling Ports
28 in Uncut Circle Radius
OPTIONAL 48 IN. EDGE XTRA CUTTING SYSTEM
Three .79 In. Greaseable Spindles
Two Front and Two Rear 2.6 In. Wide Rotateable Anti-Scalp Wheels
No Tools Anti-Scalp Wheel Cut Height Adjustment
Two 2.9 In Wide Front Anti-Scalp Rollers
4 Point Mounting
Adjustable Down Stop
.25 In. Cut Height Increments
1 to 4 In. Cutting Heights
On Board Leveling Gauge
Exact Adjust Leveling Ports
9 In. Uncut Circle Radius
TIRES
15x6-6 Front Turf Tires
20x10-10 Rear Turf Tires
STEERING
4 Wheel Low Effort Steering System
15 In. Turning Radius
Cast Iron Front Axle with Replaceable Metal Bushings
.75 In. Front Spindles
AUTOMATIC (HYDROSTATIC) TRANSMISSION
Twin Touch Foot control
Tuff-Torque k46 Transaxle
Internal Wet Disk Brakes
Tow valve
5.5 mph (8.9 km/h) Forward, 4.0mph (6.4 km/h) Reverse Travel Speed
Cruise Control
OPERATOR STATION
14 In. Steering Wheel
15 In. Open Back Seat with Access
Grip, 7 In. Fore-Aft Adjustment and Adjustable Suspension
Cup Holder
ELECTRICAL SYSTEM
195 CCA Battery
15 Amp Regulated Charging System
Four-Position Key Switch with Headlight Switch
Hour Meter
Seat/PTO Interlock Switches
Reverse Implement Option
MISCELLANEOUS
3.3 US Gallon Fuel Tank Capacity
Welded C-Channel Frame
Optional Rear Weight Bracket
Accepts 2 Quick Tatch Weights
Electric Mower/Implement PTO Drive Clutch
Foot Pedal Deck and Implement Lift System
Heavy Duty CargO Mount System
*Engine HP is Provided by the Engine Manufacturer to be Used for Comparison Purposes Only, Actual Operating HP will be Less.

CODE	ATTACHMENT IDENTIFIER	DESCRIPTION	SUGGESTED LIST PRICE USD ($)

Select One Code From Each Required Category

Select Series X304

F.O.B. Janesville, Wisconsin

4715M		Select Series X304 Tractor Less Deck, California Model	3,299.00

ATTACHMENTS FOR FIELD CONVERSION

		Blades:	
	SKU23044	44 In. Front Blade (X300) *Rear Weights and Tire Chains are Recommended for Additional Traction*	547.00
		Engine:	
	AM135845	Spark Arrester Muffler Screen (X300s, X500 M-Ts)	See Parts
		FRONT MOUNTED THATCHERS:	
	TY13056	38 In. Front Thatcher (Center) *Requires Mounting Frame.*	216.14
	TY13036	8 In. Front Thatcher (Extension)	53.50

Select Series X304 Tractor Less Deck, California Model
Continued

CODE	ATTACHMENT IDENTIFIER	DESCRIPTION	SUGGESTED LIST PRICE USD ($)
		ATTACHMENTS FOR FIELD CONVERSION Continued...	
	BM24000	Thatcher Mounting Frame (X300, X500 M-T)	203.30
		Material Collection System Hoppers:	
	BM21679	7 Bushel Hopper Assembly *Requires Appropriate Rear Bagger Chute Front. Ballast Recommended, Especially on Hills or Inclines.*	433.36
	AM135486	Loose knit bags for 7 bu. Hopper	See Parts
		Material Collection System Power Flow Blowers:	
	BM22696	48C/48X High-Performance Blower Assembly for Mowers with Rotateable Anti-Scalp Wheels (X300/X500 M-T/X700) *For use with MY2006 X320 (Serial 010001-040000), X324 (Serial) 010001-040000), Model X500 M-T Tractor (Serial 010001-020000), MY2008 X320 (Serial 085001-), MY2008 X324 (Serial 085001-) MY2008 X500 (Serial 030001-) and X360. Also for use with SKU21895 (48X with Rotateable Anti-Scalp Wheels) Cartoned Deck.*	541.41
		Material Collection System Power Flow/Rear Bagger Chutes:	
	BM21681	Power Flow Chute (7 bu.) *For 48C, 48X, 54C or 54X Series Blowers.*	114.49
	BM22594	Rear Bagger Chute for 42 In. Mowers	90.96
		Miscellaneous:	
	AM136716	12 Volt Outlet Kit (X300)	See Parts
	BM17981	12 Volt Work Light Kit	51.36
	TY25866	Battery Charger and Maintainer	See Parts
	BM23057	Brush Guard (X300, X500 M-T)	124.11
	BM23056	Bumper (X300s, X500, X530, X534)	62.06
	TY25341	Debris bag	See Parts
	M88984	Drift Blade *For Snow Blowers. Requires (2) 19H1914 Bolts and (2) N10217 Lock Nuts.*	See Parts
	TY27534	Fuel Protect for Gasoline Engines (8 oz.)	See Parts
	LG256	Home Maintenance Kit *For use with MY2006-2010 (Serial 010001-180000).*	See Parts
	LG265	Home Maintenance Kit *For use with MY2011- (Serial 180001-).*	See Parts
	AM132109	Rubber Blade Squeegee Kit	See Parts
	AM136046	Seat Net Kit	See Parts
	AM122263	Skid Shoe, Heavy Duty Left Hand (1) *For Snow Blower.*	See Parts
	AM122264	Skid Shoe, Heavy Duty Right Hand (1) *For Snow Blower.*	See Parts

Select Series X304 Tractor Less Deck, California Model
Continued

CODE	ATTACHMENT IDENTIFIER	DESCRIPTION	SUGGESTED LIST PRICE USD ($)
		ATTACHMENTS FOR FIELD CONVERSION Continued...	
	M157831	Skid shoe, Plastic (1) *For 44-, 47-, and 54-in. Snow Blowers. Two required.*	See Parts
	M115237	Spacer	See Parts
	BM23054	Sun Shade (X300/X500 M-T)	161.57
	AM141153	Wheel Cover, 6 In. (Stainless Steel)	See Parts
		Mower Deck and Mower Deck Attachments:	
	SKU24194	42 In. Edge Mulch Deck (42M) *Also order AM136646 Lift Assist Spring Kit when used on X300-38, X300-42X, X300-Less deck, X304-42X, X300-42X or with MY2006-MY2009 (Serial 010001-150,000) X300-42M tractors.*	700.00
	SKU24193	42 In. Edge Xtra Deck (42X)	600.00
	SKU24195	48 in Edge Xtra Deck with Rotateable Anti-Scalp Wheels (48X)	1,000.00
	BM22550	Anti-Scalp Wheel Extension Kit	57.79
	M154062	Blade (42X, Bagging, Starlock)	See Parts
	M127673	Blade (48C/48X, Mulching)	See Parts
	M145476	Blade (48C/48X, Side Discharge)	See Parts
	AM140332	Blade Kit (42M, Mulching Low Lift)	See Parts
	AM140973	Blade Kit (42M, Mulching)	See Parts
	AM141034	Blade Kit (42X, Bagging)	See Parts
	AM141033	Blade Kit (42X, Mulching)	See Parts
	AM141032	Blade Kit (42X, Side Discharge)	See Parts
	BM20505	Front Blowout Baffle for 42 In. Mower (42C/42X)	38.51
	BM19894	Leaf Bagging Kit (48C/48X Mower) *Contains Three Bolt-on Deck Lips for Improved Bagging of Leaves.*	99.51
	AM130907	Mower Deck Leveling Gauge	See Parts
	BM21816	Mulch Kit (42 In. or 42X)	99.51
	BM20007	Mulch Kit (48C/48X)	157.29
		Order Zone:	
	LP23117	125 lb. Electric Broadcast Spreader Barrier Shield	In Catalog
	LP3301	125 lb. Select Series Mounted Electric Broadcast Spreader *Requires Front Wheel Weights or Front Weight Bracket and 2 weights.*	In Catalog
	LP22861	25-gal. Mounted Sprayer *Tractors equipped with this sprayer require installation of the mid-mount mower, a front attachment, four front suitcase weights, or two front wheel weights.*	In Catalog

Select Series X304 Tractor Less Deck, California Model
Continued

CODE	ATTACHMENT IDENTIFIER	DESCRIPTION	SUGGESTED LIST PRICE USD ($)
		ATTACHMENTS FOR FIELD CONVERSION Continued...	
	LP40000	40-In. Tractor Shovel	In Catalog
	LP1001	42-In. Tractor Grass Groomer	In Catalog
	LP1002	48-In. / 54-In. Tractor Grass Groomer	In Catalog
	LPJD400	Bucket (5 gallon)	In Catalog
	JD01673	Bucket (6 gallon with lid)	In Catalog
	LPJD301	Bucket Holder (Double)	In Catalog
	LPJD100	Bucket Holder (Single)	In Catalog
	LP33711	Electric Lift Kit *For Snow Blower and Front Blade.*	In Catalog
	LP33712	Manual Angling Kit (44 in Front Blade X300s)	In Catalog
	LP93617	Riding Mower Deluxe Cover (M)	In Catalog
	LP93917	Riding Mower Standard Cover	In Catalog
		Protection:	
	LP92624	Seat Cover (Deluxe Medium) - Yellow	In Catalog
	LP92324	Seat Cover - Yellow	In Catalog
		Seats / Wheels / Tires:	
	TY16200	Tire Chains (Pair) for 20x10-8, 20x10-10	See Parts
		Snow Blowers:	
	SKU23045	44 In. Snow Blower (X300's, X500, X520) *Rear Weights and Tire Chains are Recommended for Additional Traction. Winter Grill Cover Recommended on Air-cooled Engines to Prevent Carburetor Icing. X300, X304 Tractors Shipped less deck or with 38X, 42X or 42M (SN -150000) Decks need to also Order AM136646 Lift Assist Spring Kit.*	1,555.00
	AM136646	Lift Assist Spring Kit	See Parts
	AM136691	Winter Grill Cover *Used on X300s and model X500 (serial 020001-), X530, and MY2011- X534 (serial 060001-).*	See Parts
		Weights:	
	R66949	Quik-Tatch Weight, 42 Lb. *Use up to 2 Weights on the rear of X300 Series Tractors*	62.06
	BM23621	Weight Bracket, Front (X300/X500 M-T) *Allows installation of up to four R66949 Quik-Tatch Weights on front of X300s.*	58.86
	BM24011	Weight Bracket, Rear (X304, X324, X534) *Allows installation of R66949 Quik-Tatch Weights*	87.74
	BM17962	Wheel Weight (Cast Iron, Front, 34 Lb., 5 or 6 in wheel) *Requires BM17978 Mounting Hardware.*	133.76

Select Series X304 Tractor Less Deck, California Model
Continued

CODE	ATTACHMENT IDENTIFIER	DESCRIPTION	SUGGESTED LIST PRICE USD ($)
		ATTACHMENTS FOR FIELD CONVERSION Continued...	
	BM17978	Wheel Weight Mounting Hardware (1) for Attaching Front Wheel Weight	10.70
		SERVICE CONTRACTS - RESIDENTIAL OWNERS/USE	
		Visit http://www.JohnDeere.com/ServicePlans for more information on John Deere Service Contracts. May not be Available in Parts of the U.S., Not Available in Canada. Price may vary due to driving distance and/or time from machine to dealership location.	
		John Deere Extended Service Plan - 5-Year Option *5-year extended service plan. (1- year of extended service protection); 5-years of warranty transportation.*	399.99
		John Deere Extended Service Plan - 6-Year Option *6-year extended service plan. (2- years of extended service protection); 6-years of warranty transportation.*	529.99

Select Series X320 Tractor Less Deck, California Model

Equipment for Base Machine

JOHN DEERE iTORQUE POWER SYSTEM
Exclusive Air Intake System
V-Twin Engine
Overhead Valves
Hemispheric Cylinder Head
V-Valve Technology
Cast Iron Cylinder Liners
Full Pressure Lubrication with
Replaceable Oil Filter
Manufactured by Kawasaki
*22 HP
LESS MOWER STANDARD
OPTIONAL 38 IN. or 42 IN. EDGE XTRA CUTTING SYSTEM or 42 IN. EDGE MULCH CUTTING SYSTEM
Two .67 In. StarLock Greaseable
Spindles
Two Front 2.6 In. Wide Anti-Scalp Wheels
4 Point Mounting
Adjustable Down Stop
.25 In. Cut Height Increments
1 to 4 In. Cutting Heights
On Board Leveling Gauge
Exact Adjust Leveling Ports
28 In. Uncut Circle Radius (38X, 42X)
27 in Uncut Circle Radius (42 Edge Mulch)
Removable Material Gates with On Board Storage (42 Edge Mulch)
OPTIONAL 48 IN. EDGE XTRA CUTTING SYSTEM
Three .79 In. Greaseable Spindles
Two Front and Two Rear 2.6 In. Wide Rotateable Anti-Scalp Wheels
No Tools Anti-Scalp Wheel Cut Height Adjustment
Two 2.9 In Wide Front Anti-Scalp Rollers
4 Point Mounting
Adjustable Down Stop
.25 In. Cut Height Increments
1 to 4 In. Cutting Heights
On Board Leveling Gauge
Exact Adjust Leveling Ports
21 In. Uncut Circle Radius
TIRES
15x6.5-8 Front Turf Tires
22x11-10 Rear Turf Tires
STEERING
2 Wheel Low Effort Steering System
16 In. Turning Radius
Cast Iron Front Axle with Replaceable Metal Bushings
.75 In. Front Spindles
AUTOMATIC (HYDROSTATIC) TRANSMISSION
Twin Touch Foot control
Tuff-Torque K58 Transaxle
Internal Wet Disk Brakes
Tow valve
6.2 mph (10 km/hr) Forward, 3.5mph (5.6 km/h) Reverse Travel Speed
Cruise Control
OPERATOR STATION
14 In. Steering Wheel
15 In. Open Back Seat with Access
Grip, 7 In. Fore-Aft Adjustment and Adjustable Suspension
Cup Holder
ELECTRICAL SYSTEM
195 CCA Battery
15 Amp Regulated Charging System
Four-Position Key Switch with Headlight Switch
Hour Meter
Seat/PTO Interlock Switches
Reverse Implement Option
MISCELLANEOUS
3.3 US Gallon Fuel Tank Capacity
Capacity
Welded C-Channel Frame
Rear Hitch Accepts 2 Quik-Tatch
Weights
Electric Mower/Implement PTO Drive Clutch
Foot Pedal Deck and Implement Lift System
Adjustable Lift Assist Spring
Heavy Duty CargO Mount System
*Engine HP is Provided by the Engine Manufacturer to be Used for Comparison Purposes Only, Actual Operating HP will be Less.

CODE	ATTACHMENT IDENTIFIER	DESCRIPTION	SUGGESTED LIST PRICE USD ($)

Select One Code From Each Required Category

Select Series X320

F.O.B. Janesville, Wisconsin

472AM		Select Series X320 Tractor Less Deck, California Model	3,399.00

ATTACHMENTS FOR FIELD CONVERSION

		Blades:	
	SKU23044	44 In. Front Blade (X300) *Rear Weights and Tire Chains are Recommended for Additional Traction*	547.00
		Engine:	
	AM135845	Spark Arrester Muffler Screen (X300s, X500 M-Ts)	See Parts
		FRONT MOUNTED THATCHERS:	
	TY13056	38 In. Front Thatcher (Center) *Requires Mounting Frame.*	216.14

Select Series X320 Tractor Less Deck, California Model
Continued

CODE	ATTACHMENT IDENTIFIER	DESCRIPTION	SUGGESTED LIST PRICE USD ($)
		ATTACHMENTS FOR FIELD CONVERSION Continued...	
	TY13036	8 In. Front Thatcher (Extension)	53.50
	BM24000	Thatcher Mounting Frame (X300, X500 M-T)	203.30
		Material Collection System Hoppers:	
	BM21679	7 Bushel Hopper Assembly *Requires Appropriate Rear Bagger Chute Front. Ballast Recommended, Especially on Hills or Inclines.*	433.36
	AM135486	Loose knit bags for 7 bu. Hopper	See Parts
		Material Collection System Power Flow Blowers:	
	BM22696	48C/48X High-Performance Blower Assembly for Mowers with Rotateable Anti-Scalp Wheels (X300/X500 M-T/X700) *For use with MY2006 X320 (Serial 010001-040000), X324 (Serial) 010001-040000), Model X500 M-T Tractor (Serial 010001-020000), MY2008 X320 (Serial 085001-), MY2008 X324 (Serial 085001-) MY2008 X500 (Serial 030001-) and X360. Also for use with SKU21895 (48X with Rotateable Anti-Scalp Wheels) Cartoned Deck.*	541.41
		Material Collection System Power Flow/Rear Bagger Chutes:	
	BM21681	Power Flow Chute (7 bu.) *For 48C, 48X, 54C or 54X Series Blowers.*	114.49
	BM22594	Rear Bagger Chute for 42 In. Mowers	90.96
		Miscellaneous:	
	AM136716	12 Volt Outlet Kit (X300)	See Parts
	BM17981	12 Volt Work Light Kit	51.36
	TY25866	Battery Charger and Maintainer	See Parts
	BM23057	Brush Guard (X300, X500 M-T)	124.11
	BM23056	Bumper (X300s, X500, X530, X534)	62.06
	TY25341	Debris bag	See Parts
	M88984	Drift Blade *For Snow Blowers. Requires (2) 19H1914 Bolts and (2) N10217 Lock Nuts.*	See Parts
	TY27534	Fuel Protect for Gasoline Engines (8 oz.)	See Parts
	LG249	Home Maintenance Kit *Fits 2010 and earlier models only (Serial-180000).*	See Parts
	LG265	Home Maintenance Kit *For use with MY2011- (Serial 180001-).*	See Parts
	AM132109	Rubber Blade Squeegee Kit	See Parts
	AM136046	Seat Net Kit	See Parts
	AM122263	Skid Shoe, Heavy Duty Left Hand (1) *For Snow Blower.*	See Parts

Select Series X320 Tractor Less Deck, California Model
Continued

CODE	ATTACHMENT IDENTIFIER	DESCRIPTION	SUGGESTED LIST PRICE USD ($)
		ATTACHMENTS FOR FIELD CONVERSION Continued...	
	AM122264	Skid Shoe, Heavy Duty Right Hand (1) *For Snow Blower.*	See Parts
	M157831	Skid shoe, Plastic (1) *For 44-, 47-, and 54-in. Snow Blowers. Two required.*	See Parts
	M115237	Spacer	See Parts
	BM23054	Sun Shade (X300/X500 M-T)	161.57
	TY24327	Tire Chains for 22x11-10 In. Turf Tires	See Parts
	AM141155	Wheel Cover, 10 In. (Stainless Steel)	See Parts
	AM141154	Wheel Cover, 8 In. (Stainless Steel)	See Parts
		Mower Deck and Mower Deck Attachments:	
	SKU24194	42 In. Edge Mulch Deck (42M) *Also order AM136646 Lift Assist Spring Kit when used on X300-38, X300-42X, X300-Less deck, X304-42X, X300-42X or with MY2006-MY2009 (Serial 010001-150,000) X300-42M tractors.*	700.00
	SKU24193	42 In. Edge Xtra Deck (42X)	600.00
	SKU24195	48 in Edge Xtra Deck with Rotateable Anti-Scalp Wheels (48X)	1,000.00
	BM22550	Anti-Scalp Wheel Extension Kit	57.79
	M154062	Blade (42X, Bagging, Starlock)	See Parts
	M127673	Blade (48C/48X, Mulching)	See Parts
	M145476	Blade (48C/48X, Side Discharge)	See Parts
	M152726	Blade (54C/54X, High Lift)	See Parts
	M145516	Blade (54C/54X, Mulching)	See Parts
	M143520	Blade (54C/54X, Side Discharge)	See Parts
	AM140332	Blade Kit (42M, Mulching Low Lift)	See Parts
	AM140973	Blade Kit (42M, Mulching)	See Parts
	AM141034	Blade Kit (42X, Bagging)	See Parts
	AM141033	Blade Kit (42X, Mulching)	See Parts
	AM141032	Blade Kit (42X, Side Discharge)	See Parts
	BM20505	Front Blowout Baffle for 42 In. Mower (42C/42X)	38.51
	BM19894	Leaf Bagging Kit (48C/48X Mower) *Contains Three Bolt-on Deck Lips for Improved Bagging of Leaves.*	99.51
	BM20985	Leaf Bagging Kit (54C/54X Mower)	124.11

Select Series X320 Tractor Less Deck, California Model
Continued

CODE	ATTACHMENT IDENTIFIER	DESCRIPTION	SUGGESTED LIST PRICE USD ($)
		ATTACHMENTS FOR FIELD CONVERSION Continued...	
	AM130907	Mower Deck Leveling Gauge	See Parts
	BM21816	Mulch Kit (42 In. or 42X)	99.51
	BM20007	Mulch Kit (48C/48X)	157.29
	BM20827	Mulch Kit (54C/54D/54X)	212.93
		Order Zone:	
	LP23117	125 lb. Electric Broadcast Spreader Barrier Shield	In Catalog
	LP3301	125 lb. Select Series Mounted Electric Broadcast Spreader *Requires Front Wheel Weights or Front Weight Bracket and 2 weights.*	In Catalog
	LP22861	25-gal. Mounted Sprayer *Tractors equipped with this sprayer require installation of the mid-mount mower, a front attachment, four front suitcase weights, or two front wheel weights.*	In Catalog
	LP40000	40-In. Tractor Shovel	In Catalog
	LP1001	42-In. Tractor Grass Groomer	In Catalog
	LP1002	48-In. / 54-In. Tractor Grass Groomer	In Catalog
	LPJD400	Bucket (5 gallon)	In Catalog
	JD01673	Bucket (6 gallon with lid)	In Catalog
	LPJD301	Bucket Holder (Double)	In Catalog
	LPJD100	Bucket Holder (Single)	In Catalog
	LP33711	Electric Lift Kit *For Snow Blower and Front Blade.*	In Catalog
	LP33712	Manual Angling Kit (44 in Front Blade X300s)	In Catalog
	LP93617	Riding Mower Deluxe Cover (M)	In Catalog
	LP93917	Riding Mower Standard Cover	In Catalog
		Protection:	
	LP92624	Seat Cover (Deluxe Medium) - Yellow	In Catalog
	LP92324	Seat Cover - Yellow	In Catalog
		Snow Blowers:	
	SKU23045	44 In. Snow Blower (X300's, X500, X520) *Rear weights and tire chains are recommended for additional traction. Winter grill cover recommended on air-cooled engines to prevent carburetor icing.*	1,555.00
	AM136691	Winter Grill Cover *Used on X300s and model X500 (serial 020001-), X530, and MY2011- X534 (serial 060001-).*	See Parts

Select Series X320 Tractor Less Deck, California Model
Continued

CODE	ATTACHMENT IDENTIFIER	DESCRIPTION	SUGGESTED LIST PRICE USD ($)
		ATTACHMENTS FOR FIELD CONVERSION Continued...	
		Weights:	
	R66949	Quik-Tatch Weight, 42 Lb. *Use up to 2 Weights on the rear of X300 Series Tractors*	62.06
	BM23621	Weight Bracket, Front (X300/X500 M-T) *Allows installation of up to four R66949 Quik-Tatch Weights on front of X300s.*	58.86
	BM17964	Wheel Weight (Cast Iron, Front, 30 Lb. 8 In.) *Requires BM17978 Wheel Weight Mounting Hardware Kit.*	101.66
	BM17978	Wheel Weight Mounting Hardware (1) for Attaching Front Wheel Weight	10.70
		SERVICE CONTRACTS - RESIDENTIAL OWNERS/USE	
		Visit http://www.JohnDeere.com/ServicePlans for more information on John Deere Service Contracts. May not be Available in Parts of the U.S., Not Available in Canada. Price may vary due to driving distance and/or time from machine to dealership location.	
		John Deere Extended Service Plan - 5-Year Option *5-year extended service plan. (1- year of extended service protection); 5-years of warranty transportation.*	399.99
		John Deere Extended Service Plan - 6-Year Option *6-year extended service plan. (2- years of extended service protection); 6-years of warranty transportation.*	529.99

Current Attachments for Non-Current LT and LTR Lawn Tractors (LT150, LT160, LT180, LT190 and LTR180)

CODE	ATTACHMENT IDENTIFIER	DESCRIPTION	SUGGESTED LIST PRICE USD ($)
		ATTACHMENTS FOR FIELD CONVERSION	
		Miscellaneous:	
	BM20796	Lift Assist Kit *For LT Tractors with Foot Lift and 38 In. or 42 In. Mower Decks.*	49.21
		Mower Deck and Mower Deck Attachments:	
	SKU20799	38 In. Side Discharge Mower (Not for LT190) *See Sales Manual for Belt Guide Requirements*	660.00
	SKU20744	42 In. Convertible Mower (Not for LT190) *See Sales Manual for Belt Guide Requirements*	782.00
	SKU20802	42 In. Freedom Mulching Mower (Not for LT190) *See Sales Manual for Belt Guide Requirements*	890.00
	BM20686	42 In. Rear Discharge Mulch Plug Attachment (LTR155, LTR166, LTR180)	174.41
	BM20635	42M Mower Wash Port Kit *For Freedom 42" Mower.*	50.29
	SKU20801	48 In. Convertible Mower (LT180) *See Sales Manual for Belt Guide Requirements.*	1,147.00
	BM20505	Front Blowout Baffle for 42 In. Mower (42C/42X)	38.51
	BM19894	Leaf Bagging Kit (48C/48X Mower) *Contains Three Bolt-on Deck Lips for Improved Bagging of Leaves.*	99.51
		Seats / Wheels / Tires:	
	BM19123	31 Lb. Plastic Rear Wheel Weights *Not for LT190*	65.27
		Weights:	
	R66949	Quik-Tatch Weight, 42 Lb.	62.06
	BM21432	Rear Weight Bracket Kit	107.00
	BM17964	Wheel Weight (Cast Iron, Front, 30 Lb. 8 In.) *Requires BM17978 Mounting Hardware* *For LT190.*	101.66
	BM17962	Wheel Weight (Cast Iron, Front, 34 Lb., 5 or 6 in wheel) *Requires BM17978 Mounting Hardware.* *Not for LT190*	133.76
	BM17978	Wheel Weight Mounting Hardware (1) for Attaching Front Wheel Weight	10.70

Current Attachments for Non-Current LX200 Series Lawn Tractors (LX280, LX280 AWS and LX289)

CODE	ATTACHMENT IDENTIFIER	DESCRIPTION	SUGGESTED LIST PRICE USD ($)
		ATTACHMENTS FOR FIELD CONVERSION	
		Miscellaneous:	
	BM19797	Adapter Kit for LX277 AWS and LX280 AWS *For LX280 AWS, Requires BM19797 Aapter Kit*	31.03
		Mower Deck and Mower Deck Attachments:	
	SKU19943	38 In. Side Discharge Mower	761.00
	SKU19671	42 In. Convertible Mower (42C) *Not for LX280 AWS.*	812.00
	BM20635	42M Mower Wash Port Kit *For Freedom 42" Mower.*	50.29
	SKU21354	48 In. Convertible Mower (48C)	1,080.00
	SKU21394	54 In. Convertible Mower (54C)	1,320.00
	BM20505	Front Blowout Baffle for 42 In. Mower (42C/42X)	38.51
	BM19894	Leaf Bagging Kit (48C/48X Mower) *Contains Three Bolt-on Deck Lips for Improved Bagging of Leaves.*	99.51
		Weights:	
	BM19511	Front Weight Bracket/Bumper *For GT225, GT235, GT235E, GT245 and GX255 Tractors.* *French Canada Dealers must order M139913, Warning Decal.*	134.81
	R66949	Quik-Tatch Weight, 42 Lb.	62.06
	BM17296	Rear Weight Mounting Kit (LX Series) *For (2) R66949 Weights. Mounting Kit is not Needed for LX280 and LX289 Tractors. LX277 AWS, LX280 AWS also Requires BM19797 Adapter Kit.*	81.31
	BM17964	Wheel Weight (Cast Iron, Front, 30 Lb. 8 In.) *Front Wheel Weight for LX280 and LX289. Requires BM17978 Wheel Weight Mounting Hardware Kit.*	101.66
	BM17962	Wheel Weight (Cast Iron, Front, 34 Lb., 5 or 6 in wheel) *Requires BM17978 Mounting Hardware.*	133.76
	BM17978	Wheel Weight Mounting Hardware (1) for Attaching Front Wheel Weight	10.70

Current Attachments for Non-Current 100 Series Lawn Tractors (102, 115, 125, 135, 145, 155C and 190C)

CODE	ATTACHMENT IDENTIFIER	DESCRIPTION	SUGGESTED LIST PRICE USD ($)
		ATTACHMENTS FOR FIELD CONVERSION	
		Material Collection System:	
	BM21888	6.5 Bushel Hopper and Chute for 100 Series, 42 In. *Front Ballast is Recommended when Bagging, Especially on Hills or Inclines.*	349.00
		Miscellaneous:	
	BG20020	46 In. Snow Blade *Requires Rear Ballast and Tire Chains.*	323.14
	BG20260	Sun Canopy	99.00
		Mower Deck and Mower Deck Attachments:	
	BG20471	42 In. Complete Mower Deck *Note: This bundle is not orderable in Canada. Please order through Parts.*	642.00
	BG20439	48 In. Complete Mower Deck *This bundle is not orderable in Canada. Please order through Parts.*	930.90
	BG20477	54 In. Complete Mower Deck *This bundle is not orderable in Canada. Please order through Parts.*	1,155.60
	BG20304	54 In. Mulch Kit *Fits G110, 190C.*	222.56
	BM21816	Mulch Kit (42 In. or 42X) *Used in place of GY00115 Cover as High Performance Mulching Option.*	99.51
		Weights:	
	R66949	Quik-Tatch Weight, 42 Lb. *Two Required.*	62.06
	BG20029	Quik-Tatch Weight, 42 Lb. (Boxed) *Two Required.*	63.13
	BM17962	Wheel Weight (Cast Iron, Front, 34 Lb., 5 or 6 in wheel) *Requires BM17978 Mounting Hardware.*	133.76
	BM17978	Wheel Weight Mounting Hardware (1) for Attaching Front Wheel Weight	10.70

Select Series X500 Multi-Terrain Tractor with 48X Edge Xtra Deck

Equipment for Base Machine

POWER SYSTEM
Exclusive Air Intake System
V-Twin Engine
Overhead Valves
Hemispheric Cylinder Head
V-Valve Technology
Cast Iron Cylinder Liners
Full Pressure Lubrication with Replaceable Oil Filter
24 HP
48 IN. EDGE XTRA CUTTING SYSTEM
Three .79 In. Greaseable Spindles
Two Front and Two Rear 2.6 In. Wide Rotateable Anti-Scalp Wheels
No Tools Anti-Scalp Wheel Cut Height Adjustment
Two, 2.9 In Wide Front Anti-Scalp Rollers
4 Point Mounting
Adjustable Down Stop
.25 In. Cut Height Increments
1 to 4 In. Cutting Heights
On Board Leveling Gauge
Exact Adjust Leveling Ports
27 In. Uncut Circle Radius
TIRES
16x6.5-8 Front Turf Tires
24x12-12 Rear Turf Tires
STEERING
2 Wheel Low Effort Steering System
22 In. Turning Radius
Cast Iron Front Axle with Replaceable Metal Bushings
.75 In. Front Spindles
AUTOMATIC (HYDROSTATIC) TRANSMISSION
Twin Touch Foot control
Tuff-Torque K72 Transaxle
Internal Wet Disk Brakes
Tow valve
Traction Assist
7.2 mph (11.6 km/h) Forward, 4 mph
(6.4 km/h) Reverse Travel Speed
Cruise Control
OPERATOR STATION
14 In. steering wheel
15 In. Open Back Seat with Access Grasp, 7 In. Fore-Aft Adjustment and Adjustable Suspension
Cup holder
Two Fender Handles
12 Volt Outlet
ELECTRICAL SYSTEM
500 CCA Battery
15 Amp Regulated Charging System
Four-Position Key Switch with Headlight Switch
Hour Meter
Oil Pressure Indicator
Mower/PTO Light
Seat/PTO Interlock Switches
Reverse Implement Option
Electronic Dash Mounted Fuel Gauge
MISCELLANEOUS
4.4 US Gallon Fuel Tank Capacity
Welded C-Channel Frame
Rear Hitch Accepts 4 Quik-Tatch Weights
Electric Mower/Implement PTO Drive Clutch
Foot Pedal Deck and Implement Lift System
Adjustable Lift Assist Spring
Heavy Duty CargO Mount System
*Engine HP is Provided by the Engine Manufacturer to be Used for Comparison Purposes Only, Actual Operating HP will be Less. Refer to the Engine Manufacturer's Web Site for Additional Information

CODE	ATTACHMENT IDENTIFIER	DESCRIPTION	SUGGESTED LIST PRICE USD ($)

Select One Code From Each Required Category

Select Series X500 Multi-Terrain Tractor with 48X Edge Xtra Deck

F.O.B. Jamesville, WI

4809M		Select Series X500 Multi-Terrain Tractor with 48X Edge Xtra Deck	5,899.00

DESTINATION

0202		United States and Canada	In Base Price
0230		Australia and New Zealand	Same Price
0195		Mexico	Same Price
0250		Other	Same Price

ATTACHMENTS FOR FIELD CONVERSION

Blades:

	SKU23048	48 in Front Blade (X500 M-T) *Rear Weights and Tire Chains are Recommended for Additional Traction.*	765.00
	BM23448	Manual Angling Kit (48 in Blade X500 M-T)	257.87

Select Series X500 Multi-Terrain Tractor with 48X Edge Xtra Deck
Continued

CODE	ATTACHMENT IDENTIFIER	DESCRIPTION	SUGGESTED LIST PRICE USD ($)
		ATTACHMENTS FOR FIELD CONVERSION Continued...	
	AM31436	Rubber Blade Squeegee Kit 48 In. and 54 In. Blade	See Parts
		Carts / Hitches:	
	PM05101	Ball Mount - 1.875 in. (48mm)	See Parts
		Engine:	
	AM135845	Spark Arrester Muffler Screen (X300s, X500 M-Ts)	See Parts
		FRONT MOUNTED THATCHERS:	
	TY13056	38 In. Front Thatcher (Center) *Requires Mounting Frame.*	216.14
	TY13036	8 In. Front Thatcher (Extension)	53.50
	BM24000	Thatcher Mounting Frame (X300, X500 M-T)	203.30
		Material Collection System Hoppers:	
	BM21680	14 Bushel Hopper Assembly *Requires Appropriate Rear Bagger Chute Front. Ballast Recommended, Especially on Hills or Inclines.*	934.11
	BM21679	7 Bushel Hopper Assembly *Requires Appropriate Rear Bagger Chute Front. Ballast Recommended, Especially on Hills or Inclines.*	433.36
	AM135486	Loose knit bags for 7 bu. Hopper	See Parts
		Material Collection System Power Flow Blowers:	
	BM22696	48C/48X High-Performance Blower Assembly for Mowers with Rotateable Anti-Scalp Wheels (X300/X500 M-T/X700)	541.41
	BM22144	48X HP Power Flow Blower Assembly for 48X Mower with Non-Rotateable Anti-Scalp Wheels (X300/X500 M-T) *For use with MY2007 X320 (Serial 040001-085000), X324 (Serial 040001-085000), and the Model X500 M-T Tractor (Serial 020001-030000). Also for use with non-current SKU22194 (48X with Non-Rotateable Anti-Scalp Wheels) Cartoned Deck.*	541.41
		Material Collection System Power Flow/Rear Bagger Chutes:	
	BM21682	Power Flow Chute (14 bu)	141.24
	BM21681	Power Flow Chute (7 bu.) *For 48C, 48X, 54C or 54X Series Blowers.*	114.49
	BM20855	Power Flow Chute (MC519/C or X Series Blowers)	85.60
		Miscellaneous:	
	BM17981	12 Volt Work Light Kit	51.36
	TY25866	Battery Charger and Maintainer	See Parts
	BM23057	Brush Guard (X300, X500 M-T)	124.11
	BM23056	Bumper (X300s, X500, X530, X534)	62.06
	TY25341	Debris bag	See Parts

Select Series X500 Multi-Terrain Tractor with 48X Edge Xtra Deck
Continued

CODE	ATTACHMENT IDENTIFIER	DESCRIPTION	SUGGESTED LIST PRICE USD ($)
		ATTACHMENTS FOR FIELD CONVERSION Continued...	
	M88984	Drift Blade	See Parts
	TY27534	Fuel Protect for Gasoline Engines (8 oz.)	See Parts
	AM119321	Heavy Duty Skid Shoe (1) *For Front Blade. Two required.*	See Parts
	LG249	Home Maintenance Kit *Fits 2010 and earlier models only (Serial -060000).*	See Parts
	LG265	Home Maintenance Kit *For use with MY2011- (Serial 060001-).*	See Parts
	AM136046	Seat Net Kit	See Parts
	AM122263	Skid Shoe, Heavy Duty Left Hand (1) *For Snow Blower.*	See Parts
	AM122264	Skid Shoe, Heavy Duty Right Hand (1) *For Snow Blower.*	See Parts
	M157831	Skid shoe, Plastic (1) *For 44-, 47-, and 54-in. Snow Blowers. Two required.*	See Parts
	M115237	Spacer	See Parts
	BM23054	Sun Shade (X300/X500 M-T)	161.57
	AM141156	Wheel Cover, 12 in. (Stainless Steel)	See Parts
	AM141154	Wheel Cover, 8 In. (Stainless Steel)	See Parts
		Mower Deck and Mower Deck Attachments:	
	SKU24195	48 in Edge Xtra Deck with Rotateable Anti-Scalp Wheels (48X)	1,000.00
	M127673	Blade (48C/48X, Mulching)	See Parts
	M145476	Blade (48C/48X, Side Discharge)	See Parts
	BM19894	Leaf Bagging Kit (48C/48X Mower) *Contains Three Bolt-on Deck Lips for Improved Bagging of Leaves.*	99.51
	AM130907	Mower Deck Leveling Gauge	See Parts
	BM20007	Mulch Kit (48C/48X)	157.29
		Order Zone:	
	LP3301	125 lb. Select Series Mounted Electric Broadcast Spreader	In Catalog
	LP22861	25-gal. Mounted Sprayer *Tractors equipped with this sprayer require installation of the mid-mount mower, a front attachment, four front suitcase weights, or two front wheel weights.*	In Catalog
	LP40000	40-In. Tractor Shovel	In Catalog
	LP1002	48-In. / 54-In. Tractor Grass Groomer	In Catalog

Select Series X500 Multi-Terrain Tractor with 48X Edge Xtra Deck
Continued

CODE	ATTACHMENT IDENTIFIER	DESCRIPTION	SUGGESTED LIST PRICE USD ($)
		ATTACHMENTS FOR FIELD CONVERSION Continued...	
	LPJD400	Bucket (5 gallon)	In Catalog
	JD01673	Bucket (6 gallon with lid)	In Catalog
	LPJD301	Bucket Holder (Double)	In Catalog
	LPJD100	Bucket Holder (Single)	In Catalog
	LP33711	Electric Lift Kit *For Snow Blower and Front Blade.*	In Catalog
	LP31357	Integral Hitch, Mechanical	In Catalog
	LP22834	MC542 Material Collection System *Requires 17P Utility Cart, Appropriate Mower Deck Boot Kit, Rear Ballast Recommended, Especially on Hills or Inclines.*	In Catalog
	LP23080	MC542 Mower Deck Boot Kit (48X)	In Catalog
	LP93647	Protective Cover (Large Deluxe)	In Catalog
	LP93917	Riding Mower Standard Cover	In Catalog
		Protection:	
	LP92624	Seat Cover (Deluxe Medium) - Yellow	In Catalog
	LP92324	Seat Cover - Yellow	In Catalog
		Seats / Wheels / Tires:	
	TY24328	Tire Chains (Pair) for 24x12.00-12 In. Drive Tires	See Parts
		Snow Blowers:	
	SKU23045	44 In. Snow Blower (X300's, X500, X520) *Rear weights and tire chains are recommended for additional traction.* *Winter grill cover recommended on air-cooled engines to prevent carburetor icing.*	1,555.00
	AM136645	Lift Assist Spring	See Parts
	AM136691	Winter Grill Cover *Used on X300s, MY2007- Model X500 (serial 020001-), X530, and MY2011- X534 (serial 060001-).*	See Parts
	AM136692	Winter Grill Cover *Used on MY2006 Model X500 (Serial -020000), X520, and MY2006-2010 X534 (serial 010001-060000).*	See Parts
		Tillers:	
	SKU23030	30 in Mechanical Tiller (X500, X520, X530, X540) *See Sales Manual for Ballast Requirements.*	1,689.00
		Weights:	
	BM17972	50 Lb. Cast Iron Wheel Weight (1)	128.40
	BM17976	50 Lb. Wheel Weight, Rear Plastic (1) with Mounting Hardware	66.34
	BM17977	Mounting Hardware (1) for Attaching Two 50 lb. Weights to 23 In., 24 In. or 26 In. Tires	20.33

Select Series X500 Multi-Terrain Tractor with 48X Edge Xtra Deck
Continued

CODE	ATTACHMENT IDENTIFIER	DESCRIPTION	SUGGESTED LIST PRICE USD ($)
		ATTACHMENTS FOR FIELD CONVERSION Continued...	
	R66949	Quik-Tatch Weight, 42 Lb.	62.06
	BM23621	Weight Bracket, Front (X300/X500 M-T) *Allows installation of R66949 Quik-Tatch Weights.* *Used on X300s, MY2007- Model X500 (serial 020001-),* *X530, and MY2011- X534 (serial 060001-).*	58.86
	BM17964	Wheel Weight (Cast Iron, Front, 30 Lb. 8 In.) *For Use on Steered Wheel.*	101.66
	BM17978	Wheel Weight Mounting Hardware (1) for Attaching Front Wheel Weight	10.70
		Wheels and Tires Rear:	
	BM18434	23x10.50-12 In. 4 PR Bar Tires (Rear Pair)	339.19
	BM21977	24X12.00-12 In. 2PR HDAP Tires (Rear Pair)	371.29
	BM21516	24X12.00-12 In. Turf Tires 2PR (Rear)	339.19
		SERVICE CONTRACTS - RESIDENTIAL OWNERS/USE	
		Visit http://www.JohnDeere.com/ServicePlans for more information on John Deere Service Contracts. May not be Available in Parts of the U.S., Not Available in Canada. Price may vary due to driving distance and/or time from machine to dealership location.	
		John Deere Extended Service Plan - 5-Year Option *5-year extended service plan. (1- year of extended service protection);* *5-years of warranty transportation.*	499.99
		John Deere Extended Service Plan - 6-Year Option *6-year extended service plan. (2- years of extended service protection);* *6-years of warranty transportation.*	629.99

Select Series X500 Multi-Terrain Tractor with 54X Edge Xtra Deck

Equipment for Base Machine

POWER SYSTEM
Exclusive Air Intake System
V-Twin Engine
Overhead Valves
Hemispheric Cylinder Head
V-Valve Technology
Cast Iron Cylinder Liners
Full Pressure Lubrication with Replaceable Oil Filter
24 HP
54 IN. EDGE XTRA CUTTING SYSTEM
Three .79 In. Greaseable Spindles
Two Front and Two Rear 2.6 In. Wide Rotateable Anti-Scalp Wheels
No Tools Anti-Scalp Wheel Cut Height Adjustment
Two, 2.9 In Wide Front Anti-Scalp Rollers
4 Point Mounting
Adjustable Down Stop
.25 In. Cut Height Increments
1 to 4 In. Cutting Heights
On Board Leveling Gauge
Exact Adjust Leveling Ports
24 In. Uncut Circle Radius
TIRES
16x6.5-8 Front Turf Tires
24x12-12 Rear Turf Tires
STEERING
2 Wheel Low Effort Steering System
22 In. Turning Radius
Cast Iron Front Axle with Replaceable Metal Bushings
.75 In. Front Spindles
AUTOMATIC (HYDROSTATIC) TRANSMISSION
Twin Touch Foot control
Tuff-Torque K72 Transaxle
Internal Wet Disk Brakes
Tow valve
Traction Assist
7.2 mph (11.6 km/h) Forward, 4 mph
(6.4 km/h) Reverse Travel Speed
Cruise Control
OPERATOR STATION
14 In. steering wheel
15 In. Open Back Seat with Access Grasp, 7 In. Fore-Aft Adjustment and Adjustable Suspension
Cup holder
Two Fender Handles
12 Volt Outlet
ELECTRICAL SYSTEM
500 CCA Battery
15 Amp Regulated Charging System
Four-Position Key Switch with Headlight Switch
Hour Meter
Oil Pressure Indicator
Mower/PTO Light
Seat/PTO Interlock Switches
Reverse Implement Option
Electronic Dash Mounted Fuel Gauge
MISCELLANEOUS
4.4 US Gallon Fuel Tank Capacity
Welded C-Channel Frame
Rear Hitch Accepts 4 Quik-Tatch Weights
Electric Mower/Implement PTO Drive Clutch
Foot Pedal Deck and Implement Lift System
Adjustable Lift Assist Spring
Heavy Duty CargO Mount System
*Engine HP is Provided by the Engine Manufacturer to be Used for Comparison Purposes Only, Actual Operating HP will be Less. Refer to the Engine Manufacturer's Web Site for Additional Information.

CODE	ATTACHMENT IDENTIFIER	DESCRIPTION	SUGGESTED LIST PRICE USD ($)

Select One Code From Each Required Category

Select Series X500 Multi-Terrain Tractor with 54X Edge Xtra Deck

F.O.B. Jamesville, WI

480AM		Select Series X500 Multi-Terrain Tractor with 54X Edge Xtra Deck	6,199.00

DESTINATION

0202		United States and Canada	In Base Price
0230		Australia and New Zealand	Same Price
0195		Mexico	Same Price
0250		Other	Same Price

ATTACHMENTS FOR FIELD CONVERSION

Blades:

	SKU23048	48 in Front Blade (X500 M-T) *Rear Weights and Tire Chains are Recommended for Additional Traction.*	765.00
	BM23448	Manual Angling Kit (48 in Blade X500 M-T)	257.87

Select Series X500 Multi-Terrain Tractor with 54X Edge Xtra Deck
Continued

CODE	ATTACHMENT IDENTIFIER	DESCRIPTION	SUGGESTED LIST PRICE USD ($)
		ATTACHMENTS FOR FIELD CONVERSION Continued...	
	AM31436	Rubber Blade Squeegee Kit 48 In. and 54 In. Blade	See Parts
		Carts / Hitches:	
	PM05101	Ball Mount - 1.875 in. (48mm)	See Parts
		Engine:	
	AM135845	Spark Arrester Muffler Screen (X300s, X500 M-Ts)	See Parts
		FRONT MOUNTED THATCHERS:	
	TY13056	38 In. Front Thatcher (Center) *Requires Mounting Frame.*	216.14
	TY13036	8 In. Front Thatcher (Extension)	53.50
	BM24000	Thatcher Mounting Frame (X300, X500 M-T)	203.30
		Material Collection System Hoppers:	
	BM21680	14 Bushel Hopper Assembly *Requires Appropriate Rear Bagger Chute Front. Ballast Recommended, Especially on Hills or Inclines.*	934.11
	BM21679	7 Bushel Hopper Assembly *Requires Appropriate Rear Bagger Chute Front. Ballast Recommended, Especially on Hills or Inclines.*	433.36
	AM135486	Loose knit bags for 7 bu. Hopper	See Parts
		Material Collection System Power Flow Blowers:	
	BM22696	48C/48X High-Performance Blower Assembly for Mowers with Rotateable Anti-Scalp Wheels (X300/X500 M-T/X700)	541.41
	BM22697	54C/54X/54D High-Performance Blower Assembly (X300/X500 M-T/X700, 1023E, 1025R, 1026R, 2305, 2025R, 2320, 2210 and 4115)	541.41
		Material Collection System Power Flow/Rear Bagger Chutes:	
	BM21682	Power Flow Chute (14 bu)	141.24
	BM21681	Power Flow Chute (7 bu.) *For 48C, 48X, 54C or 54X Series Blowers.*	114.49
	BM20855	Power Flow Chute (MC519/C or X Series Blowers)	85.60
		Miscellaneous:	
	BM17981	12 Volt Work Light Kit	51.36
	TY25866	Battery Charger and Maintainer	See Parts
	BM23057	Brush Guard (X300, X500 M-T)	124.11
	BM23056	Bumper (X300s, X500, X530, X534)	62.06
	TY25341	Debris bag	See Parts
	M88984	Drift Blade	See Parts
	TY27534	Fuel Protect for Gasoline Engines (8 oz.)	See Parts

Select Series X500 Multi-Terrain Tractor with 54X Edge Xtra Deck
Continued

CODE	ATTACHMENT IDENTIFIER	DESCRIPTION	SUGGESTED LIST PRICE USD ($)
		ATTACHMENTS FOR FIELD CONVERSION Continued...	
	AM119321	Heavy Duty Skid Shoe (1) *For Front Blade. Two required.*	See Parts
	LG249	Home Maintenance Kit *Fits 2010 and earlier models only (Serial -060000).*	See Parts
	LG265	Home Maintenance Kit *For use with MY2011- (Serial 060001-).*	See Parts
	AM136046	Seat Net Kit	See Parts
	AM122263	Skid Shoe, Heavy Duty Left Hand (1) *For Snow Blower.*	See Parts
	AM122264	Skid Shoe, Heavy Duty Right Hand (1) *For Snow Blower.*	See Parts
	M157831	Skid shoe, Plastic (1) *For 44-, 47-, and 54-in. Snow Blowers. Two required.*	See Parts
	M115237	Spacer	See Parts
	BM23054	Sun Shade (X300/X500 M-T)	161.57
	AM141156	Wheel Cover, 12 in. (Stainless Steel)	See Parts
	AM141154	Wheel Cover, 8 In. (Stainless Steel)	See Parts
		Mower Deck and Mower Deck Attachments:	
	SKU21897	54 in Edge Xtra Deck (54X)	1,300.00
	M152726	Blade (54C/54X, High Lift)	See Parts
	M145516	Blade (54C/54X, Mulching)	See Parts
	M143520	Blade (54C/54X, Side Discharge)	See Parts
	BM20985	Leaf Bagging Kit (54C/54X Mower) *Contains Three Bolt-on Deck Lips for Improved Bagging of Leaves.*	124.11
	AM130907	Mower Deck Leveling Gauge	See Parts
	BM20827	Mulch Kit (54C/54D/54X)	212.93
		Order Zone:	
	LP3301	125 lb. Select Series Mounted Electric Broadcast Spreader	In Catalog
	LP22861	25-gal. Mounted Sprayer *Tractors equipped with this sprayer require installation of the mid-mount mower, a front attachment, four front suitcase weights, or two front wheel weights.*	In Catalog
	LP40000	40-In. Tractor Shovel	In Catalog
	LP1002	48-In. / 54-In. Tractor Grass Groomer	In Catalog
	LPJD400	Bucket (5 gallon)	In Catalog

Select Series X500 Multi-Terrain Tractor with 54X Edge Xtra Deck
Continued

CODE	ATTACHMENT IDENTIFIER	DESCRIPTION	SUGGESTED LIST PRICE USD ($)
		ATTACHMENTS FOR FIELD CONVERSION Continued...	
	JD01673	Bucket (6 gallon with lid)	In Catalog
	LPJD301	Bucket Holder (Double)	In Catalog
	LPJD100	Bucket Holder (Single)	In Catalog
	LP33711	Electric Lift Kit *For Snow Blower and Front Blade.*	In Catalog
	LP31357	Integral Hitch, Mechanical	In Catalog
	LP22834	MC542 Material Collection System *Requires 17P Utility Cart, Appropriate Mower Deck Boot Kit, Rear Ballast Recommended, Especially on Hills or Inclines.*	In Catalog
	LP23081	MC542 Mower Deck Boot Kit (54X)	In Catalog
	LP93647	Protective Cover (Large Deluxe)	In Catalog
	LP93917	Riding Mower Standard Cover	In Catalog
		Protection:	
	LP92624	Seat Cover (Deluxe Medium) - Yellow	In Catalog
	LP92324	Seat Cover - Yellow	In Catalog
		Seats / Wheels / Tires:	
	TY24328	Tire Chains (Pair) for 24x12.00-12 In. Drive Tires	See Parts
		Snow Blowers:	
	SKU23045	44 In. Snow Blower (X300's, X500, X520) *Rear weights and tire chains are recommended for additional traction.* *Winter grill cover recommended on air-cooled engines to prevent carburetor icing.*	1,555.00
	AM136645	Lift Assist Spring	See Parts
	AM136691	Winter Grill Cover *Used on X300s, MY2007- Model X500 (serial 020001-), X530, and MY2011- X534 (serial 060001-).*	See Parts
	AM136692	Winter Grill Cover *Used on MY2006 Model X500 (Serial -020000), X520, and MY2006-2010 X534 (serial 010001-060000).*	See Parts
		Tillers:	
	SKU23030	30 in Mechanical Tiller (X500, X520, X530, X540) *See Sales Manual for Ballast Requirements.*	1,689.00
		Weights:	
	BM17972	50 Lb. Cast Iron Wheel Weight (1)	128.40
	BM17976	50 Lb. Wheel Weight, Rear Plastic (1) with Mounting Hardware	66.34
	BM17977	Mounting Hardware (1) for Attaching Two 50 lb. Weights to 23 In., 24 In. or 26 In. Tires	20.33
	R66949	Quik-Tatch Weight, 42 Lb.	62.06

Select Series X500 Multi-Terrain Tractor with 54X Edge Xtra Deck
Continued

CODE	ATTACHMENT IDENTIFIER	DESCRIPTION	SUGGESTED LIST PRICE USD ($)
		ATTACHMENTS FOR FIELD CONVERSION Continued...	
	BM23621	Weight Bracket, Front (X300/X500 M-T) *Allows installation of R66949 Quik-Tatch Weights.* *Used on X300s, MY2007- Model X500 (serial 020001-),* *X530, and MY2011- X534 (serial 060001-).*	58.86
	BM17964	Wheel Weight (Cast Iron, Front, 30 Lb. 8 In.) *For Use on Steered Wheel.*	101.66
	BM17978	Wheel Weight Mounting Hardware (1) for Attaching Front Wheel Weight	10.70
		Wheels and Tires Rear:	
	BM18434	23x10.50-12 In. 4 PR Bar Tires (Rear Pair)	339.19
	BM21977	24X12.00-12 In. 2PR HDAP Tires (Rear Pair)	371.29
	BM21516	24X12.00-12 In. Turf Tires 2PR (Rear)	339.19
		SERVICE CONTRACTS - RESIDENTIAL OWNERS/USE	
		Visit http://www.JohnDeere.com/ServicePlans for more information on John Deere Service Contracts. May not be Available in Parts of the U.S., Not Available in Canada. Price may vary due to driving distance and/or time from machine to dealership location.	
		John Deere Extended Service Plan - 5-Year Option *5-year extended service plan. (1- year of extended service protection);* *5-years of warranty transportation.*	499.99
		John Deere Extended Service Plan - 6-Year Option *6-year extended service plan. (2- years of extended service protection);* *6-years of warranty transportation.*	629.99

Select Series X530 Multi-Terrain Tractor with 54X Edge Xtra Deck

Equipment for Base Machine

POWER SYSTEM
Exclusive Air Intake System
V-Twin Engine
Overhead Valves
Hemispheric Cylinder Head
V-Valve Technology
Cast Iron Cylinder Liners
Full Pressure Lubrication with Replaceable Oil Filter
24 HP
54 IN. EDGE XTRA CUTTING SYSTEM
Three .79 In. Greaseable Spindles
Two Front and Two Rear 2.6 In. Wide Rotateable Anti-Scalp Wheels
No Tools Anti-Scalp Wheel Cut Height Adjustment
Two, 2.9 In Wide Front Anit-Scalp Rollers
4 Point Mounting
Adjustable Down Stop
.25 In. Cut Height Increments
1 to 4 In. Cutting Heights
On Board Leveling Gauge
Exact Adjust Leveling Ports
24 In. Uncut Circle Radius
TIRES
16x6.5-8 Front Turf Tires
24x12-12 Rear HDAP Tires
STEERING
2 Wheel Low Effort Steering System
Hydraulic Power Steering
22 In. Turning Radius
Cast Iron Front Axle with Replaceable Metal Bushings
1 In. Front Spindles
AUTOMATIC (HYDROSTATIC) TRANSMISSION
Twin Touch Foot control
Tuff-Torque K72 Transaxle
Internal Wet Disk Brakes
Tow valve
Traction Assist
7.2 mph (11.6 km/h) Forward, 4 mph (6.4 km/h) Reverse Travel Speed
Cruise Control
OPERATOR STATION
14 In. steering wheel
15 In. Open Back Seat with Access Grasp, 7 In. Fore-Aft Adjustment and Adjustable Suspension
Cup holder
Two Fender Handles
12 Volt Outlet
ELECTRICAL SYSTEM
500 CCA Battery
15 Amp Regulated Charging System
Four-Position Key Switch with Headlight Switch
Hour Meter
Oil Pressure Indicator
Mower/PTO Light
Seat/PTO Interlock Switches
Reverse Implement Option
Electronic Dash Mounted Fuel Gauge
MISCELLANEOUS
4.4 US Gallon Fuel Tank Capacity
Welded C-Channel Frame
Rear Hitch Accepts 4 Quik-Tatch Weights
Electric Mower/Implement PTO Drive Clutch
Hydraulic Power Deck and Implement Lift System
Heavy Duty CargO Mount System
*Engine HP is Provided by the Engine Manufacturer to be Used for Comparison Purposes Only, Actual Operating HP will be Less. Refer to the Engine Manufacturer's Web Site for Additional Information.

CODE	ATTACHMENT IDENTIFIER	DESCRIPTION	SUGGESTED LIST PRICE USD ($)

Select One Code From Each Required Category

Select Series X530 Multi-Terrain Tractor with 54X Edge Xtra Deck

F.O.B. Jamesville, WI

4842M		Select Series X530 Multi-Terrain Tractor with 54X Edge Xtra Deck	6,999.00

DESTINATION

0202		United States and Canada	In Base Price
0230		Australia and New Zealand	Same Price
0195		Mexico	Same Price
0250		Other	Same Price

ATTACHMENTS FOR FIELD CONVERSION

Blades:

	SKU23048	48 in Front Blade (X500 M-T) *Rear Weights and Tire Chains are Recommended for Additional Traction.*	765.00
	BM23448	Manual Angling Kit (48 in Blade X500 M-T)	257.87

Select Series X530 Multi-Terrain Tractor with 54X Edge Xtra Deck
Continued

CODE	ATTACHMENT IDENTIFIER	DESCRIPTION	SUGGESTED LIST PRICE USD ($)
		ATTACHMENTS FOR FIELD CONVERSION Continued...	
	AM31436	Rubber Blade Squeegee Kit 48 In. and 54 In. Blade	See Parts
		Carts / Hitches:	
	PM05101	Ball Mount - 1.875 in. (48mm)	See Parts
		Engine:	
	AM135845	Spark Arrester Muffler Screen (X300s, X500 M-Ts)	See Parts
		FRONT MOUNTED THATCHERS:	
	TY13056	38 In. Front Thatcher (Center) *Requires Mounting Frame.*	216.14
	TY13036	8 In. Front Thatcher (Extension)	53.50
	BM24000	Thatcher Mounting Frame (X300, X500 M-T)	203.30
		Material Collection System Hoppers:	
	BM21680	14 Bushel Hopper Assembly *Requires Appropriate Rear Bagger Chute Front. Ballast Recommended, Especially on Hills or Inclines.*	934.11
	BM21679	7 Bushel Hopper Assembly *Requires Appropriate Rear Bagger Chute Front. Ballast Recommended, Especially on Hills or Inclines.*	433.36
	AM135486	Loose knit bags for 7 bu. Hopper	See Parts
		Material Collection System Power Flow Blowers:	
	BM22696	48C/48X High-Performance Blower Assembly for Mowers with Rotateable Anti-Scalp Wheels (X300/X500 M-T/X700)	541.41
	BM22697	54C/54X/54D High-Performance Blower Assembly (X300/X500 M-T/X700, 1023E, 1025R, 1026R, 2305, 2025R, 2320, 2210 and 4115)	541.41
		Material Collection System Power Flow/Rear Bagger Chutes:	
	BM21682	Power Flow Chute (14 bu)	141.24
	BM21681	Power Flow Chute (7 bu.) *For 48C, 48X, 54C or 54X Series Blowers.*	114.49
	BM20855	Power Flow Chute (MC519/C or X Series Blowers)	85.60
		Miscellaneous:	
	BM17981	12 Volt Work Light Kit	51.36
	BM19406	Adjustable Skid Shoes *For 42 In. Hydraulic Tiller*	220.41
	TY25866	Battery Charger and Maintainer	See Parts
	BM23057	Brush Guard (X300, X500 M-T)	124.11
	BM23056	Bumper (X300s, X500, X530, X534)	62.06
	TY25341	Debris bag	See Parts
	M88984	Drift Blade	See Parts

Select Series X530 Multi-Terrain Tractor with 54X Edge Xtra Deck
Continued

CODE	ATTACHMENT IDENTIFIER	DESCRIPTION	SUGGESTED LIST PRICE USD ($)
		ATTACHMENTS FOR FIELD CONVERSION Continued...	
	TY27534	Fuel Protect for Gasoline Engines (8 oz.)	See Parts
	AM119321	Heavy Duty Skid Shoe (1) *For Front Blade. Two required.*	See Parts
	LG249	Home Maintenance Kit *Fits 2010 and earlier models only (Serial -060000).*	See Parts
	LG265	Home Maintenance Kit *For use with MY2011- (Serial 060001-).*	See Parts
	AM136046	Seat Net Kit	See Parts
	AM122263	Skid Shoe, Heavy Duty Left Hand (1) *For Snow Blower.*	See Parts
	AM122264	Skid Shoe, Heavy Duty Right Hand (1) *For Snow Blower.*	See Parts
	M157831	Skid shoe, Plastic (1) *For 44-, 47-, and 54-in. Snow Blowers. Two required.*	See Parts
	M115237	Spacer	See Parts
	BM23054	Sun Shade (X300/X500 M-T)	161.57
	AM141156	Wheel Cover, 12 in. (Stainless Steel)	See Parts
	AM141154	Wheel Cover, 8 In. (Stainless Steel)	See Parts
		Mower Deck and Mower Deck Attachments:	
	SKU21897	54 in Edge Xtra Deck (54X)	1,300.00
	M152726	Blade (54C/54X, High Lift)	See Parts
	M145516	Blade (54C/54X, Mulching)	See Parts
	M143520	Blade (54C/54X, Side Discharge)	See Parts
	BM20985	Leaf Bagging Kit (54C/54X Mower) *Contains Three Bolt-on Deck Lips for Improved Bagging of Leaves.*	124.11
	AM130907	Mower Deck Leveling Gauge	See Parts
	BM20827	Mulch Kit (54C/54D/54X)	212.93
		Order Zone:	
	LP3301	125 lb. Select Series Mounted Electric Broadcast Spreader	In Catalog
	LP22861	25-gal. Mounted Sprayer *Tractors equipped with this sprayer require installation of the mid-mount mower, a front attachment, four front suitcase weights, or two front wheel weights.*	In Catalog
	LP40000	40-In. Tractor Shovel	In Catalog
	LP1002	48-In. / 54-In. Tractor Grass Groomer	In Catalog

Select Series X530 Multi-Terrain Tractor with 54X Edge Xtra Deck
Continued

CODE	ATTACHMENT IDENTIFIER	DESCRIPTION	SUGGESTED LIST PRICE USD ($)
		ATTACHMENTS FOR FIELD CONVERSION Continued...	
	LPJD400	Bucket (5 gallon)	In Catalog
	JD01673	Bucket (6 gallon with lid)	In Catalog
	LPJD301	Bucket Holder (Double)	In Catalog
	LPJD100	Bucket Holder (Single)	In Catalog
	LP31357	Integral Hitch, Mechanical	In Catalog
	LP22835	Integral Hitch, Power	In Catalog
	LP22834	MC542 Material Collection System *Requires 17P Utility Cart, Appropriate Mower Deck Boot Kit, Rear Ballast Recommended, Especially on Hills or Inclines.*	In Catalog
	LP23081	MC542 Mower Deck Boot Kit (54X)	In Catalog
	LP93647	Protective Cover (Large Deluxe)	In Catalog
	LP93917	Riding Mower Standard Cover	In Catalog
		Protection:	
	LP92624	Seat Cover (Deluxe Medium) - Yellow	In Catalog
	LP92324	Seat Cover - Yellow	In Catalog
		Seats / Wheels / Tires:	
	TY24328	Tire Chains (Pair) for 24x12.00-12 In. Drive Tires	See Parts
		Snow Blowers:	
	SKU23047	47 In. Snow Blower (X530, X534, X540) *Rear weights and tire chains are recommended for additional traction.*	1,755.00
	AM136691	Winter Grill Cover *Used on X300s, MY2007- Model X500 (serial 020001-), X530, and MY2011- X534 (serial 060001-).*	See Parts
		Tillers:	
	SKU23030	30 in Mechanical Tiller (X500, X520, X530, X540) *See Sales Manual for Ballast Requirements.*	1,689.00
	SKU23042	42 In. Hydraulic Tiller (X530, X540) *See Sales Manual for Ballast Requirements.*	2,499.00
		Weights:	
	BM17972	50 Lb. Cast Iron Wheel Weight (1)	128.40
	BM17976	50 Lb. Wheel Weight, Rear Plastic (1) with Mounting Hardware	66.34
	BM17977	Mounting Hardware (1) for Attaching Two 50 lb. Weights to 23 In., 24 In. or 26 In. Tires	20.33
	R66949	Quik-Tatch Weight, 42 Lb.	62.06

Select Series X530 Multi-Terrain Tractor with 54X Edge Xtra Deck
Continued

CODE	ATTACHMENT IDENTIFIER	DESCRIPTION	SUGGESTED LIST PRICE USD ($)
		ATTACHMENTS FOR FIELD CONVERSION Continued...	
	BM23621	Weight Bracket, Front (X300/X500 M-T) *Allows installation of R66949 Quik-Tatch Weights.* *Used on X300s, MY2007- Model X500 (serial 020001-),* *X530, and MY2011- X534 (serial 060001-).*	58.86
	BM17964	Wheel Weight (Cast Iron, Front, 30 Lb. 8 In.) *For Use on Steered Wheel.*	101.66
	BM17978	Wheel Weight Mounting Hardware (1) for Attaching Front Wheel Weight	10.70
		Wheels and Tires Rear:	
	BM18434	23x10.50-12 In. 4 PR Bar Tires (Rear Pair)	339.19
	BM21977	24X12.00-12 In. 2PR HDAP Tires (Rear Pair)	371.29
	BM21516	24X12.00-12 In. Turf Tires 2PR (Rear)	339.19
		SERVICE CONTRACTS - RESIDENTIAL OWNERS/USE	
		Visit http://www.JohnDeere.com/ServicePlans for more information on John Deere Service Contracts. May not be Available in Parts of the U.S., Not Available in Canada. Price may vary due to driving distance and/or time from machine to dealership location.	
		John Deere Extended Service Plan - 5-Year Option *5-year extended service plan. (1- year of extended service protection);* *5-years of warranty transportation.*	499.99
		John Deere Extended Service Plan - 6-Year Option *6-year extended service plan. (2- years of extended service protection);* *6-years of warranty transportation.*	629.99

Select Series X534 Multi-Terrain Tractor Less Deck

Equipment for Base Machine

JOHN DEERE iTORQUE POWER SYSTEM
Exclusive Air Intake System
V-Twin Engine
Overhead Valves
Hemispheric Cylinder Head
V-Valve Technology
Cast Iron Cylinder Liners
Full Pressure Lubrication with Replaceable Oil Filter
Manufactured by Kawasaki
*26 HP
LESS MOWER STANDARD
OPTIONAL 48 IN. or 54 IN. EDGE XTRA CUTTING SYSTEM
Three .79 In. Greaseable Spindles
Two Front and Two Rear 2.6 In. Wide Anti-Scalp Wheels
No Tools Anti-Scalp Wheel Cut Height Adjustment
Two, 2.9 In Wide Front Anti-Scalp Rollers
4 Point Mounting
Adjustable Down Stop
.25 In. Cut Height Increments
1 to 4 In. Cutting Heights
On Board Leveling Gauge
Exact Adjust Leveling Ports
14 In. Uncut Circle Radius with 48 In. Mower
13 In. Uncut Circle Radius with 54 In. Mower
TIRES
16x6.5-8 Front Turf Tires
24x9.5-12 Rear Turf Tires
STEERING
4 Wheel Low Effort Steering System
Hydraulic Power Steering
27 In. Turning Radius
Cast Iron Front Axle with Replaceable Metal Bushings
1 In. Front Spindles
AUTOMATIC (HYDROSTATIC) TRANSMISSION
Twin Touch Foot control
Tuff-Torque K72 Transaxle
Internal Wet Disk Brakes
Tow valve
Traction Assist
7.2 mph (11.6 km/h) Forward, 4 mph
(6.4 km/h) Reverse Travel Speed
Cruise Control
OPERATOR STATION
14 In. steering wheel
5-Position Tilt Steering Wheel
21 In. High Back Seat with 7 In. Fore-Aft Adjustment and Adjustable Suspension
Cup holder
Two Fender Handles
12 Volt Outlet
ELECTRICAL SYSTEM
500 CCA Battery
15 Amp Regulated Charging System
Four-Position Key Switch with Headlight Switch
Hour Meter
Oil Pressure Indicator
Mower/PTO Light
Seat/PTO Interlock Switches
Reverse Implement Option
Electronic Dash Mounted Fuel Gauge
MISCELLANEOUS
4.5 US Gallon Fuel Tank Capacity
Welded C-Channel Frame
Optional Rear Weight Bracket
Accepts 4 Quick Tatch Weights
Electric Mower/Implement PTO Drive Clutch
Hydraulic Power Deck and Implement Lift System
Heavy Duty CargO Mount System
*Engine HP is Provided by the Engine Manufacturer to be Used for Comparison Purposes Only, Actual Operating HP will be Less.

CODE	ATTACHMENT IDENTIFIER	DESCRIPTION	SUGGESTED LIST PRICE USD ($)

Select One Code From Each Required Category

Select Series X534 Multi-Terrain Tractor Less Deck

F.O.B. Jamesville, WI

4826M		Select Series X534 Multi-Terrain Tractor Less Deck	6,499.00

DESTINATION

0202		United States and Canada	In Base Price
0230		Australia and New Zealand	Same Price
0195		Mexico	Same Price
0250		Other	Same Price

ATTACHMENTS FOR FIELD CONVERSION

Blades:

	SKU23048	48 in Front Blade (X500 M-T)	765.00

Rear Weights and Tire Chains are Recommended for Additional Traction.

Select Series X534 Multi-Terrain Tractor Less Deck
Continued

CODE	ATTACHMENT IDENTIFIER	DESCRIPTION	SUGGESTED LIST PRICE USD ($)
		ATTACHMENTS FOR FIELD CONVERSION Continued...	
	BM23448	Manual Angling Kit (48 in Blade X500 M-T)	257.87
	AM31436	Rubber Blade Squeegee Kit 48 In. and 54 In. Blade	See Parts
		Carts / Hitches:	
	PM05101	Ball Mount - 1.875 in. (48mm)	See Parts
		Engine:	
	AM135845	Spark Arrester Muffler Screen (X300s, X500 M-Ts)	See Parts
		FRONT MOUNTED THATCHERS:	
	TY13056	38 In. Front Thatcher (Center) *Requires Mounting Frame.*	216.14
	TY13036	8 In. Front Thatcher (Extension)	53.50
	BM24000	Thatcher Mounting Frame (X300, X500 M-T)	203.30
		Material Collection System Hoppers:	
	BM21680	14 Bushel Hopper Assembly *Requires Appropriate Rear Bagger Chute Front. Ballast Recommended, Especially on Hills or Inclines.*	934.11
	BM21679	7 Bushel Hopper Assembly *Requires Appropriate Rear Bagger Chute Front. Ballast Recommended, Especially on Hills or Inclines.*	433.36
	AM135486	Loose knit bags for 7 bu. Hopper	See Parts
		Material Collection System Power Flow Blowers:	
	BM22696	48C/48X High-Performance Blower Assembly for Mowers with Rotateable Anti-Scalp Wheels (X300/X500 M-T/X700) *For use with MY2006 X320 (Serial 010001-040000), X324 (Serial 010001-040000), Model X500 M-T Tractor (Serial 010001-020000), MY2008- X320 (Serial 085001-), MY2008- X324 (Serial 085001-), MY2008- X500 (Serial 030001-), and X360. Also for use with SKU21895 (48X with Rotateable Anti-Scalp Wheels) Cartoned Deck.*	541.41
	BM22697	54C/54X/54D High-Performance Blower Assembly (X300/X500 M-T/X700, 1023E, 1025R, 1026R, 2305, 2025R, 2320, 2210 and 4115)	541.41
		Material Collection System Power Flow/Rear Bagger Chutes:	
	BM21682	Power Flow Chute (14 bu)	141.24
	BM21681	Power Flow Chute (7 bu.) *For 48C, 48X, 54C or 54X Series Blowers.*	114.49
	BM20855	Power Flow Chute (MC519/C or X Series Blowers)	85.60
		Miscellaneous:	
	BM17981	12 Volt Work Light Kit	51.36
	BM23761	Adjustment Armrest Kit *For use with MY2011- (SN 060001-) X534 and X540).*	74.90
	TY25866	Battery Charger and Maintainer	See Parts

Select Series X534 Multi-Terrain Tractor Less Deck
Continued

CODE	ATTACHMENT IDENTIFIER	DESCRIPTION	SUGGESTED LIST PRICE USD ($)
		ATTACHMENTS FOR FIELD CONVERSION Continued...	
	BM23057	Brush Guard (X300, X500 M-T)	124.11
	BM23056	Bumper (X300s, X500, X530, X534)	62.06
	TY25341	Debris bag	See Parts
	M88984	Drift Blade	See Parts
	TY27534	Fuel Protect for Gasoline Engines (8 oz.)	See Parts
	AM119321	Heavy Duty Skid Shoe (1) *For Front Blade. Two required.*	See Parts
	LG249	Home Maintenance Kit *Fits 2010 and earlier models only (Serial -060000).*	See Parts
	LG265	Home Maintenance Kit *For use with MY2011- (Serial 060001-).*	See Parts
	AM122263	Skid Shoe, Heavy Duty Left Hand (1) *For Snow Blower.*	See Parts
	AM122264	Skid Shoe, Heavy Duty Right Hand (1) *For Snow Blower.*	See Parts
	M157831	Skid shoe, Plastic (1) *For 44-, 47-, and 54-in. Snow Blowers. Two required.*	See Parts
	M115237	Spacer	See Parts
	BM23054	Sun Shade (X300/X500 M-T)	161.57
	TY26227	Tire Chains (Pair) for 23x9.5-12 or 24x9.5-12 tires on X534	See Parts
	AM141156	Wheel Cover, 12 in. (Stainless Steel)	See Parts
	AM141154	Wheel Cover, 8 In. (Stainless Steel)	See Parts
		Mower Deck and Mower Deck Attachments:	
	SKU24195	48 in Edge Xtra Deck with Rotateable Anti-Scalp Wheels (48X)	1,000.00
	SKU21897	54 in Edge Xtra Deck (54X)	1,300.00
	M127673	Blade (48C/48X, Mulching)	See Parts
	M145476	Blade (48C/48X, Side Discharge)	See Parts
	M152726	Blade (54C/54X, High Lift)	See Parts
	M145516	Blade (54C/54X, Mulching)	See Parts
	M143520	Blade (54C/54X, Side Discharge)	See Parts
	BM19894	Leaf Bagging Kit (48C/48X Mower) *Contains Three Bolt-on Deck Lips for Improved Bagging of Leaves.*	99.51

Select Series X534 Multi-Terrain Tractor Less Deck
Continued

CODE	ATTACHMENT IDENTIFIER	DESCRIPTION	SUGGESTED LIST PRICE USD ($)
		ATTACHMENTS FOR FIELD CONVERSION Continued...	
	BM20985	Leaf Bagging Kit (54C/54X Mower) *Contains Three Bolt-on Deck Lips for Improved Bagging of Leaves.*	124.11
	AM130907	Mower Deck Leveling Gauge	See Parts
	BM20007	Mulch Kit (48C/48X)	157.29
	BM20827	Mulch Kit (54C/54D/54X)	212.93
		Order Zone:	
	LP3301	125 lb. Select Series Mounted Electric Broadcast Spreader	In Catalog
	LP22861	25-gal. Mounted Sprayer *Tractors equipped with this sprayer require installation of the mid-mount mower, a front attachment, four front suitcase weights, or two front wheel weights.*	In Catalog
	LP40000	40-In. Tractor Shovel	In Catalog
	LP1002	48-In. / 54-In. Tractor Grass Groomer	In Catalog
	LPJD400	Bucket (5 gallon)	In Catalog
	JD01673	Bucket (6 gallon with lid)	In Catalog
	LPJD301	Bucket Holder (Double)	In Catalog
	LP31357	Integral Hitch, Mechanical	In Catalog
	LP22835	Integral Hitch, Power	In Catalog
	LP22834	MC542 Material Collection System *Requires 17P Utility Cart, Appropriate Mower Deck Boot Kit, Rear Ballast Recommended, Especially on Hills or Inclines.*	In Catalog
	LP23080	MC542 Mower Deck Boot Kit (48X)	In Catalog
	LP23081	MC542 Mower Deck Boot Kit (54X)	In Catalog
	LP93647	Protective Cover (Large Deluxe)	In Catalog
	LP93917	Riding Mower Standard Cover	In Catalog
		Snow Blowers:	
	SKU23047	47 In. Snow Blower (X530, X534, X540) *Rear weights and tire chains are recommended for additional traction.*	1,755.00
	AM136691	Winter Grill Cover *Used on X300s, MY2007- Model X500 (serial 020001-), X530, and MY2011- X534 (serial 060001-).*	See Parts
	AM136692	Winter Grill Cover *Used on MY2006 Model X500 (Serial -020000), X520, and MY2006-2010 X534 (serial 010001-060000).*	See Parts

Select Series X534 Multi-Terrain Tractor Less Deck
Continued

CODE	ATTACHMENT IDENTIFIER	DESCRIPTION	SUGGESTED LIST PRICE USD ($)
		ATTACHMENTS FOR FIELD CONVERSION Continued...	
		Weights:	
	BM17972	50 Lb. Cast Iron Wheel Weight (1)	128.40
	BM17976	50 Lb. Wheel Weight, Rear Plastic (1) with Mounting Hardware	66.34
	BM17977	Mounting Hardware (1) for Attaching Two 50 lb. Weights to 23 In., 24 In. or 26 In. Tires	20.33
	R66949	Quik-Tatch Weight, 42 Lb.	62.06
	BM23621	Weight Bracket, Front (X300/X500 M-T) *Allows installation of R66949 Quik-Tatch Weights. Used on X300s, MY2007- Model X500 (serial 020001-), X530, and MY2011- X534 (serial 060001-).*	58.86
	BM24011	Weight Bracket, Rear (X304, X324, X534) *Allows installation of R66949 Quik-Tatch Weights*	87.74
	BM17964	Wheel Weight (Cast Iron, Front, 30 Lb. 8 In.) *For Use on Steered Wheel.*	101.66
	BM17978	Wheel Weight Mounting Hardware (1) for Attaching Front Wheel Weight	10.70
		SERVICE CONTRACTS - RESIDENTIAL OWNERS/USE	
		Visit http://www.JohnDeere.com/ServicePlans for more information on John Deere Service Contracts. May not be Available in Parts of the U.S., Not Available in Canada. Price may vary due to driving distance and/or time from machine to dealership location.	
		John Deere Extended Service Plan - 5-Year Option *5-year extended service plan. (1- year of extended service protection); 5-years of warranty transportation.*	499.99
		John Deere Extended Service Plan - 6-Year Option *6-year extended service plan. (2- years of extended service protection); 6-years of warranty transportation.*	629.99

Select Series X540 Multi-Terrain Tractor with 54X Edge Xtra Deck

Equipment for Base Machine

POWER SYSTEM
Exclusive Air Intake System
V-Twin Liquid-Cooled Engine
Overhead Valves
Hemispheric Cylinder Head
V-Valve Technology
Cast Iron Cylinder Liners
Full Pressure Lubrication with Replaceable Oil Filter 23.5 HP
54 IN. EDGE XTRA CUTTING SYSTEM
Three .79 In. Greaseable Spindles
Two Front and Two Rear 2.6 In. Wide Rotateable Anti-Scalp Wheels
No Tools Anti-Scalp Wheel Cut Height Adjustment
Two, 2.9 In Wide Front Anit-Scalp Rollers
4 Point Mounting
Adjustable Down Stop
.25 In. Cut Height Increments
1 to 4 In. Cutting Heights
On Board Leveling Gauge
Exact Adjust Leveling Ports
24 In. Uncut Circle Radius
TIRES
16x6.5-8 Front Turf Tires
24x12-12 Rear HDAP Tires
STEERING
2 Wheel Low Effort Steering System
Hydraulic Power Steering
22 In. Turning Radius
Cast Iron Front Axle with Replaceable Metal Bushings
1 In. Front Spindles
AUTOMATIC (HYDROSTATIC) TRANSMISSION
Twin Touch Foot control
Tuff-Torque K72 Transaxle
Internal Wet Disk Brakes
Tow valve
Traction Assist
7.2 mph (11.6 km/h) Forward, 4 mph
(6.4 km/h) Reverse Travel Speed
Cruise Control
OPERATOR STATION
14 In. steering wheel
5-Position Tilt Steering Wheel
21 In. High Back Seat with 7 In. Fore-Aft Adjustment and Adjustable Suspension
Cup holder
Two Fender Handles
12 Volt Outlet
ELECTRICAL SYSTEM
500 CCA Battery
15 Amp Regulated Charging System
Four-Position Key Switch with Headlight Switch
Hour Meter
Oil Pressure Indicator
Coolant Temperature Indicator
Mower/PTO Light
Seat/PTO Interlock Switches
MISCLANEOUS
4.4 US Gallon Fuel Tank Capacity
Welded C-Channel Frame
Rear Hitch Accepts 4 Quik-Tatch Weights
Front Bumper Accepts 4 Quik-Tatch Weights
Electric Mower/Implement PTO Drive Clutch
Hydraulic Power Deck and Implement Lift System
Heavy Duty CargO Mount System
*Engine HP is Provided by the Engine Manufacturer to be Used for Comparison Purposes Only, Actual Operating HP will be Less. Refer to the Engine Manufacturer's Web Site for Additional Information.

CODE	ATTACHMENT IDENTIFIER	DESCRIPTION	SUGGESTED LIST PRICE USD ($)

Select One Code From Each Required Category

Select Series X540 Multi-Terrain Tractor with 54X Edge Xtra Deck

F.O.B. Jamesville, WI

4839M		Select Series X540 Multi-Terrain Tractor with 54X Edge Xtra Deck	7,799.00

DESTINATION

0202		United States and Canada	In Base Price
0230		Australia and New Zealand	Same Price
0195		Mexico	Same Price
0250		Other	Same Price

ATTACHMENTS FOR FIELD CONVERSION

Blades:

	SKU23048	48 in Front Blade (X500 M-T) *Rear Weights and Tire Chains are Recommended for Additional Traction.*	765.00
	BM23448	Manual Angling Kit (48 in Blade X500 M-T)	257.87

Select Series X540 Multi-Terrain Tractor with 54X Edge Xtra Deck
Continued

CODE	ATTACHMENT IDENTIFIER	DESCRIPTION	SUGGESTED LIST PRICE USD ($)
		ATTACHMENTS FOR FIELD CONVERSION Continued...	
	AM31436	Rubber Blade Squeegee Kit 48 In. and 54 In. Blade	See Parts
		Carts / Hitches:	
	PM05101	Ball Mount - 1.875 in. (48mm)	See Parts
		Engine:	
	AM135845	Spark Arrester Muffler Screen (X300s, X500 M-Ts)	See Parts
		FRONT MOUNTED THATCHERS:	
	TY13056	38 In. Front Thatcher (Center) *Requires Mounting Frame.*	216.14
	TY13036	8 In. Front Thatcher (Extension)	53.50
	BM24000	Thatcher Mounting Frame (X300, X500 M-T)	203.30
		Material Collection System Hoppers:	
	BM21680	14 Bushel Hopper Assembly *Requires Appropriate Rear Bagger Chute Front. Ballast Recommended, Especially on Hills or Inclines.*	934.11
	BM21679	7 Bushel Hopper Assembly *Requires Appropriate Rear Bagger Chute Front. Ballast Recommended, Especially on Hills or Inclines.*	433.36
	AM135486	Loose knit bags for 7 bu. Hopper	See Parts
		Material Collection System Power Flow Blowers:	
	BM22696	48C/48X High-Performance Blower Assembly for Mowers with Rotateable Anti-Scalp Wheels (X300/X500 M-T/X700)	541.41
	BM22697	54C/54X/54D High-Performance Blower Assembly (X300/X500 M-T/X700, 1023E, 1025R, 1026R, 2305, 2025R, 2320, 2210 and 4115)	541.41
		Material Collection System Power Flow/Rear Bagger Chutes:	
	BM21682	Power Flow Chute (14 bu)	141.24
	BM21681	Power Flow Chute (7 bu.) *For 48C, 48X, 54C or 54X Series Blowers.*	114.49
	BM20855	Power Flow Chute (MC519/C or X Series Blowers)	85.60
		Miscellaneous:	
	BM17981	12 Volt Work Light Kit	51.36
	BM19406	Adjustable Skid Shoes *For 42 In. Hydraulic Tiller*	220.41
	BM23761	Adjustment Armrest Kit *For use with MY2011- (SN 060001-) X534 and X540).*	74.90
	TY25866	Battery Charger and Maintainer	See Parts
	BM23057	Brush Guard (X300, X500 M-T)	124.11
	TY25341	Debris bag	See Parts
	M88984	Drift Blade	See Parts

Select Series X540 Multi-Terrain Tractor with 54X Edge Xtra Deck
Continued

CODE	ATTACHMENT IDENTIFIER	DESCRIPTION	SUGGESTED LIST PRICE USD ($)
		ATTACHMENTS FOR FIELD CONVERSION Continued...	
	TY27534	Fuel Protect for Gasoline Engines (8 oz.)	See Parts
	BM21289	Halogen Headlight Kit	57.79
	AM119321	Heavy Duty Skid Shoe (1) *For Front Blade. Two required.*	See Parts
	LG257	Home Maintenance Kit	See Parts
	AM122263	Skid Shoe, Heavy Duty Left Hand (1) *For Snow Blower.*	See Parts
	AM122264	Skid Shoe, Heavy Duty Right Hand (1) *For Snow Blower.*	See Parts
	M157831	Skid shoe, Plastic (1) *For 44-, 47-, and 54-in. Snow Blowers. Two required.*	See Parts
	M115237	Spacer	See Parts
	BM23054	Sun Shade (X300/X500 M-T)	161.57
	AM141156	Wheel Cover, 12 in. (Stainless Steel)	See Parts
	AM141154	Wheel Cover, 8 In. (Stainless Steel)	See Parts
		Mower Deck and Mower Deck Attachments:	
	SKU21897	54 in Edge Xtra Deck (54X)	1,300.00
	M152726	Blade (54C/54X, High Lift)	See Parts
	M145516	Blade (54C/54X, Mulching)	See Parts
	M143520	Blade (54C/54X, Side Discharge)	See Parts
	BM20985	Leaf Bagging Kit (54C/54X Mower) *Contains Three Bolt-on Deck Lips for Improved Bagging of Leaves.*	124.11
	AM130907	Mower Deck Leveling Gauge	See Parts
	BM20827	Mulch Kit (54C/54D/54X)	212.93
		Order Zone:	
	LP3301	125 lb. Select Series Mounted Electric Broadcast Spreader	In Catalog
	LP22861	25-gal. Mounted Sprayer *Tractors equipped with this sprayer require installation of the mid-mount mower, a front attachment, four front suitcase weights, or two front wheel weights.*	In Catalog
	LP40000	40-In. Tractor Shovel	In Catalog
	LP1002	48-In. / 54-In. Tractor Grass Groomer	In Catalog
	LPJD400	Bucket (5 gallon)	In Catalog
	JD01673	Bucket (6 gallon with lid)	In Catalog

Select Series X540 Multi-Terrain Tractor with 54X Edge Xtra Deck
Continued

CODE	ATTACHMENT IDENTIFIER	DESCRIPTION	SUGGESTED LIST PRICE USD ($)
		ATTACHMENTS FOR FIELD CONVERSION Continued...	
	LPJD301	Bucket Holder (Double)	In Catalog
	LPJD100	Bucket Holder (Single)	In Catalog
	LP31357	Integral Hitch, Mechanical	In Catalog
	LP22835	Integral Hitch, Power	In Catalog
	LP22834	MC542 Material Collection System *Requires 17P Utility Cart, Appropriate Mower Deck Boot Kit, Rear Ballast Recommended, Especially on Hills or Inclines.*	In Catalog
	LP23081	MC542 Mower Deck Boot Kit (54X)	In Catalog
	LP93647	Protective Cover (Large Deluxe)	In Catalog
	LP93917	Riding Mower Standard Cover	In Catalog
		Seats / Wheels / Tires:	
	TY24328	Tire Chains (Pair) for 24x12.00-12 In. Drive Tires	See Parts
		Snow Blowers:	
	SKU23047	47 In. Snow Blower (X530, X534, X540) *Rear weights and tire chains are recommended for additional traction.*	1,755.00
		Tillers:	
	SKU23030	30 in Mechanical Tiller (X500, X520, X530, X540) *See Sales Manual for Ballast Requirements.*	1,689.00
	SKU23042	42 In. Hydraulic Tiller (X530, X540) *See Sales Manual for Ballast Requirements.*	2,499.00
		Weights:	
	BM17972	50 Lb. Cast Iron Wheel Weight (1)	128.40
	BM17976	50 Lb. Wheel Weight, Rear Plastic (1) with Mounting Hardware	66.34
	BM17977	Mounting Hardware (1) for Attaching Two 50 lb. Weights to 23 In., 24 In. or 26 In. Tires	20.33
	R66949	Quik-Tatch Weight, 42 Lb.	62.06
	BM17964	Wheel Weight (Cast Iron, Front, 30 Lb. 8 In.) *For Use on Steered Wheel.*	101.66
	BM17978	Wheel Weight Mounting Hardware (1) for Attaching Front Wheel Weight	10.70
		Wheels and Tires Rear:	
	BM18434	23x10.50-12 In. 4 PR Bar Tires (Rear Pair)	339.19
	BM21977	24X12.00-12 In. 2PR HDAP Tires (Rear Pair)	371.29
	BM21516	24X12.00-12 In. Turf Tires 2PR (Rear)	339.19

SERVICE CONTRACTS - RESIDENTIAL OWNERS/USE

Select Series X540 Multi-Terrain Tractor with 54X Edge Xtra Deck
Continued

CODE	ATTACHMENT IDENTIFIER	DESCRIPTION	SUGGESTED LIST PRICE USD ($)
		SERVICE CONTRACTS - RESIDENTIAL OWNERS/USE Continued... *Visit http://www.JohnDeere.com/ServicePlans for more information on John Deere Service Contracts. May not be Available in Parts of the U.S., Not Available in Canada. Price may vary due to driving distance and/or time from machine to dealership location.*	
		John Deere Extended Service Plan - 5-Year Option *5-year extended service plan. (1- year of extended service protection); 5-years of warranty transportation.*	499.99
		John Deere Extended Service Plan - 6-Year Option *6-year extended service plan. (2- years of extended service protection); 6-years of warranty transportation.*	629.99

Select Series X540 Multi-Terrain Tractor Less Deck

Equipment for Base Machine

POWER SYSTEM
Exclusive Air Intake System
V-Twin Liquid-Cooled Engine
Overhead Valves
Hemispheric Cylinder Head
V-Valve Technology
Cast Iron Cylinder Liners
Full Pressure Lubrication with Replaceable Oil Filter
23.5 HP
LESS MOWER STANDARD
OPTIONAL 48 IN. or 54 IN. EDGE XTRA CUTTING SYSTEM
Three .79 In. Greaseable Spindles
Two Front and Two Rear 2.6 In. Wide Anti-Scalp Wheels
No Tools Anti-Scalp Wheel Cut Height Adjustment
Two, 2.9 In Wide Front Anti-Scalp Rollers
4 Point Mounting
Adjustable Down Stop
.25 In. Cut Height Increments
1 to 4 In. Cutting Heights
On Board Leveling Gauge
Exact Adjust Leveling Ports
24 In. Uncut Circle Radius with 54X Mower
27 In. Uncut Circle Radius with 48X Mower
TIRES
16x6.5-8 Front Turf Tires
24x12-12 Rear Turf Tires

STEERING
2 Wheel Low Effort Steering System
Hydraulic Power Steering
22 In. Turning Radius
Cast Iron Front Axle with Replaceable Metal Bushings
1 In. Front Spindles
AUTOMATIC (HYDROSTATIC) TRANSMISSION
Twin Touch Foot control
Tuff-Torque K72 Transaxle
Internal Wet Disk Brakes
Tow valve
Traction Assist
7.2 mph (11.6 km/h) Forward, 4 mph
(6.4 km/h) Reverse Travel Speed
Cruise Control
OPERATOR STATION
14 In. steering wheel
21 In. High Back Seat with 7 In. Fore-Aft Adjustment and Adjustable Suspension
Cup holder
Two Fender Handles
12 Volt Outlet
ELECTRICAL SYSTEM
500 CCA Battery
15 Amp Regulated Charging System
Four-Position Key Switch with Headlight Switch
Hour Meter

Oil Pressure Indicator
Coolant Temperature Indicator
Mower/PTO Light
Seat/PTO Interlock Switches
Reverse Implement Option
Electronic Dash Mounted Fuel Gauge
MISCELLANEOUS
4.4 US Gallon Fuel Tank Capacity
Welded C-Channel Frame
Rear Hitch Accepts 4 Quik-Tatch Weights
Electric Mower/Implement PTO Drive Clutch
Foot Pedal Deck and Implement Lift System
Adjustable Lift Assist Spring
Heavy Duty CargO Mount System
*Engine HP is Provided by the Engine Manufacturer to be Used for Comparison Purposes Only, Actual Operating HP will be Less. Refer to the Engine Manufacturer's Web Site for Additional Information.

CODE	ATTACHMENT IDENTIFIER	DESCRIPTION	SUGGESTED LIST PRICE USD ($)

Select One Code From Each Required Category

Select Series X540 Multi-Terrain Tractor Less Deck

F.O.B. Jamesville, WI

483AM		Select Series X540 Multi-Terrain Tractor Less Deck	6,599.00

DESTINATION

0202		United States and Canada	In Base Price
0230		Australia and New Zealand	Same Price
0195		Mexico	Same Price
0250		Other	Same Price

ATTACHMENTS FOR FIELD CONVERSION

Blades:

	SKU23048	48 in Front Blade (X500 M-T)	765.00

Rear Weights and Tire Chains are Recommended for Additional Traction.

Select Series X540 Multi-Terrain Tractor Less Deck
Continued

CODE	ATTACHMENT IDENTIFIER	DESCRIPTION	SUGGESTED LIST PRICE USD ($)
		ATTACHMENTS FOR FIELD CONVERSION Continued...	
	BM23448	Manual Angling Kit (48 in Blade X500 M-T)	257.87
	AM31436	Rubber Blade Squeegee Kit 48 In. and 54 In. Blade	See Parts
		Carts / Hitches:	
	PM05101	Ball Mount - 1.875 in. (48mm)	See Parts
		Engine:	
	AM135845	Spark Arrester Muffler Screen (X300s, X500 M-Ts)	See Parts
		FRONT MOUNTED THATCHERS:	
	TY13056	38 In. Front Thatcher (Center) *Requires Mounting Frame.*	216.14
	TY13036	8 In. Front Thatcher (Extension)	53.50
	BM24000	Thatcher Mounting Frame (X300, X500 M-T)	203.30
		Material Collection System Hoppers:	
	BM21680	14 Bushel Hopper Assembly *Requires Appropriate Rear Bagger Chute Front. Ballast Recommended, Especially on Hills or Inclines.*	934.11
	BM21679	7 Bushel Hopper Assembly *Requires Appropriate Rear Bagger Chute Front. Ballast Recommended, Especially on Hills or Inclines.*	433.36
	AM135486	Loose knit bags for 7 bu. Hopper	See Parts
		Material Collection System Power Flow Blowers:	
	BM22696	48C/48X High-Performance Blower Assembly for Mowers with Rotateable Anti-Scalp Wheels (X300/X500 M-T/X700)	541.41
	BM22697	54C/54X/54D High-Performance Blower Assembly (X300/X500 M-T/X700, 1023E, 1025R, 1026R, 2305, 2025R, 2320, 2210 and 4115)	541.41
		Material Collection System Power Flow/Rear Bagger Chutes:	
	BM21682	Power Flow Chute (14 bu)	141.24
	BM21681	Power Flow Chute (7 bu.) *For 48C, 48X, 54C or 54X Series Blowers.*	114.49
	BM20855	Power Flow Chute (MC519/C or X Series Blowers)	85.60
		Miscellaneous:	
	BM17981	12 Volt Work Light Kit	51.36
	BM19406	Adjustable Skid Shoes *For 42 In. Hydraulic Tiller*	220.41
	BM23761	Adjustment Armrest Kit *For use with MY2011- (SN 060001-) X534 and X540).*	74.90
	TY25866	Battery Charger and Maintainer	See Parts
	BM23057	Brush Guard (X300, X500 M-T)	124.11
	TY25341	Debris bag	See Parts

Select Series X540 Multi-Terrain Tractor Less Deck
Continued

CODE	ATTACHMENT IDENTIFIER	DESCRIPTION	SUGGESTED LIST PRICE USD ($)
		ATTACHMENTS FOR FIELD CONVERSION Continued...	
	M88984	Drift Blade	See Parts
	TY27534	Fuel Protect for Gasoline Engines (8 oz.)	See Parts
	BM21289	Halogen Headlight Kit	57.79
	AM119321	Heavy Duty Skid Shoe (1) *For Front Blade. Two required.*	See Parts
	LG257	Home Maintenance Kit	See Parts
	AM122263	Skid Shoe, Heavy Duty Left Hand (1) *For Snow Blower.*	See Parts
	AM122264	Skid Shoe, Heavy Duty Right Hand (1) *For Snow Blower.*	See Parts
	M157831	Skid shoe, Plastic (1) *For 44-, 47-, and 54-in. Snow Blowers. Two required.*	See Parts
	M115237	Spacer	See Parts
	BM23054	Sun Shade (X300/X500 M-T)	161.57
	AM141156	Wheel Cover, 12 in. (Stainless Steel)	See Parts
	AM141154	Wheel Cover, 8 In. (Stainless Steel)	See Parts
		Mower Deck and Mower Deck Attachments:	
	SKU24195	48 in Edge Xtra Deck with Rotateable Anti-Scalp Wheels (48X)	1,000.00
	SKU21897	54 in Edge Xtra Deck (54X)	1,300.00
	M127673	Blade (48C/48X, Mulching)	See Parts
	M145476	Blade (48C/48X, Side Discharge)	See Parts
	M152726	Blade (54C/54X, High Lift)	See Parts
	M145516	Blade (54C/54X, Mulching)	See Parts
	M143520	Blade (54C/54X, Side Discharge)	See Parts
	BM19894	Leaf Bagging Kit (48C/48X Mower) *Contains Three Bolt-on Deck Lips for Improved Bagging of Leaves.*	99.51
	BM20985	Leaf Bagging Kit (54C/54X Mower) *Contains Three Bolt-on Deck Lips for Improved Bagging of Leaves.*	124.11
	AM130907	Mower Deck Leveling Gauge	See Parts
	BM20007	Mulch Kit (48C/48X)	157.29
	BM20827	Mulch Kit (54C/54D/54X)	212.93
		Order Zone:	

Select Series X540 Multi-Terrain Tractor Less Deck
Continued

CODE	ATTACHMENT IDENTIFIER	DESCRIPTION	SUGGESTED LIST PRICE USD ($)
		ATTACHMENTS FOR FIELD CONVERSION Continued...	
	LP3301	125 lb. Select Series Mounted Electric Broadcast Spreader	In Catalog
	LP22861	25-gal. Mounted Sprayer *Tractors equipped with this sprayer require installation of the mid-mount mower, a front attachment, four front suitcase weights, or two front wheel weights.*	In Catalog
	LP40000	40-In. Tractor Shovel	In Catalog
	LP1002	48-In. / 54-In. Tractor Grass Groomer	In Catalog
	LPJD400	Bucket (5 gallon)	In Catalog
	JD01673	Bucket (6 gallon with lid)	In Catalog
	LPJD301	Bucket Holder (Double)	In Catalog
	LPJD100	Bucket Holder (Single)	In Catalog
	LP31357	Integral Hitch, Mechanical	In Catalog
	LP22835	Integral Hitch, Power	In Catalog
	LP22834	MC542 Material Collection System *Requires 17P Utility Cart, Appropriate Mower Deck Boot Kit, Rear Ballast Recommended, Especially on Hills or Inclines.*	In Catalog
	LP23080	MC542 Mower Deck Boot Kit (48X)	In Catalog
	LP23081	MC542 Mower Deck Boot Kit (54X)	In Catalog
	LP93647	Protective Cover (Large Deluxe)	In Catalog
	LP93917	Riding Mower Standard Cover	In Catalog
		Seats / Wheels / Tires:	
	TY24328	Tire Chains (Pair) for 24x12.00-12 In. Drive Tires	See Parts
		Snow Blowers:	
	SKU23047	47 In. Snow Blower (X530, X534, X540) *Rear weights and tire chains are recommended for additional traction.*	1,755.00
		Tillers:	
	SKU23030	30 in Mechanical Tiller (X500, X520, X530, X540) *See Sales Manual for Ballast Requirements.*	1,689.00
	SKU23042	42 In. Hydraulic Tiller (X530, X540) *See Sales Manual for Ballast Requirements.*	2,499.00
		Weights:	
	BM17972	50 Lb. Cast Iron Wheel Weight (1)	128.40
	BM17976	50 Lb. Wheel Weight, Rear Plastic (1) with Mounting Hardware	66.34
	BM17977	Mounting Hardware (1) for Attaching Two 50 lb. Weights to 23 In., 24 In. or 26 In. Tires	20.33

Select Series X540 Multi-Terrain Tractor Less Deck
Continued

CODE	ATTACHMENT IDENTIFIER	DESCRIPTION	SUGGESTED LIST PRICE USD ($)
		ATTACHMENTS FOR FIELD CONVERSION Continued...	
	R66949	Quik-Tatch Weight, 42 Lb.	62.06
	BM17964	Wheel Weight (Cast Iron, Front, 30 Lb. 8 In.) *For Use on Steered Wheel.*	101.66
	BM17978	Wheel Weight Mounting Hardware (1) for Attaching Front Wheel Weight	10.70
		Wheels and Tires Rear:	
	BM18434	23x10.50-12 In. 4 PR Bar Tires (Rear Pair)	339.19
	BM21977	24X12.00-12 In. 2PR HDAP Tires (Rear Pair)	371.29
	BM21516	24X12.00-12 In. Turf Tires 2PR (Rear)	339.19
		SERVICE CONTRACTS - RESIDENTIAL OWNERS/USE	
		Visit http://www.JohnDeere.com/ServicePlans for more information on John Deere Service Contracts. May not be Available in Parts of the U.S., Not Available in Canada. Price may vary due to driving distance and/or time from machine to dealership location.	
		John Deere Extended Service Plan - 5-Year Option *5-year extended service plan. (1- year of extended service protection); 5-years of warranty transportation.*	499.99
		John Deere Extended Service Plan - 6-Year Option *6-year extended service plan. (2- years of extended service protection); 6-years of warranty transportation.*	629.99

Select Series X500 Multi-Terrain Tractor Less Deck, California Model

Equipment for Base Machine

JOHN DEERE iTORQUE POWER SYSTEM
Exclusive Air Intake System
V-Twin Engine
Overhead Valves
Hemispheric Cylinder Head
V-Valve Technology
Cast Iron Cylinder Liners
Full Pressure Lubrication with Replaceable Oil Filter
Manufactured by Kawasaki
*26 HP
LESS MOWER STANDARD
OPTIONAL 48 IN. or 54 IN. EDGE XTRA CUTTING SYSTEM
Three .79 In. Greaseable Spindles
Two Front and Two Rear 2.6 In. Wide Anti-Scalp Wheels
No Tools Anti-Scalp Wheel Cut Height Adjustment
Two, 2.9 In Wide Front Anti-Scalp Rollers
4 Point Mounting
Adjustable Down Stop
.25 In. Cut Height Increments
1 to 4 In. Cutting Heights
On Board Leveling Gauge
Exact Adjust Leveling Ports
24 In. Uncut Circle Radius with 54X Mower
27 In. Uncut Circle Radius with 48X Mower
TIRES
16x6.5-8 Front Turf Tires
24x12-12 Rear Turf Tires
STEERING
2 Wheel Low Effort Steering System
22 In. Turning Radius
Cast Iron Front Axle with Replaceable Metal Bushings
.75 In. Front Spindles
AUTOMATIC (HYDROSTATIC) TRANSMISSION
Twin Touch Foot control
Tuff-Torque K72 Transaxle
Internal Wet Disk Brakes
Tow valve
Traction Assist
7.2 mph (11.6 km/h) Forward, 4 mph
(6.4 km/h) Reverse Travel Speed
Cruise Control
OPERATOR STATION
14 In. steering wheel
15 In. Open Back Seat with Access Grasp, 7 In. Fore-Aft Adjustment and Adjustable Suspension
Cup holder
Two Fender Handles
12 Volt Outlet
ELECTRICAL SYSTEM
500 CCA Battery
15 Amp Regulated Charging System
Four-Position Key Switch with Headlight Switch
Hour Meter
Oil Pressure Indicator
Mower/PTO Light
Seat/PTO Interlock Switches
Reverse Implement Option
Electronic Dash Mounted Fuel Gauge
MISCELLANEOUS
4.5 US Gallon Fuel Tank Capacity
Welded C-Channel Frame
Rear Hitch Accepts 4 Quik-Tatch Weights
Electric Mower/Implement PTO Drive Clutch
Foot Pedal Deck and Implement Lift System
Adjustable Lift Assist Spring
Heavy Duty CargO Mount System
*Engine HP is Provided by the Engine Manufacturer to be Used for Comparison Purposes Only, Actual Operating HP will be Less.

CODE	ATTACHMENT IDENTIFIER	DESCRIPTION	SUGGESTED LIST PRICE USD ($)

Select One Code From Each Required Category

Select Series X500 Multi-Terrain Tractor Less Deck, California Model

F.O.B. Jamesville, WI

4808M		Select Series X500 Multi-Terrain Tractor Less Deck, California Model	4,999.00

ATTACHMENTS FOR FIELD CONVERSION

		Blades:	
	SKU23048	48 in Front Blade (X500 M-T) *Rear Weights and Tire Chains are Recommended for Additional Traction.*	765.00
	BM23448	Manual Angling Kit (48 in Blade X500 M-T)	257.87
	AM31436	Rubber Blade Squeegee Kit 48 In. and 54 In. Blade	See Parts
		Carts / Hitches:	
	PM05101	Ball Mount - 1.875 in. (48mm)	See Parts
		Engine:	
	AM135845	Spark Arrester Muffler Screen (X300s, X500 M-Ts)	See Parts

Select Series X500 Multi-Terrain Tractor Less Deck, California Model
Continued

CODE	ATTACHMENT IDENTIFIER	DESCRIPTION	SUGGESTED LIST PRICE USD ($)
		ATTACHMENTS FOR FIELD CONVERSION Continued...	
		FRONT MOUNTED THATCHERS:	
	TY13056	38 In. Front Thatcher (Center) *Requires Mounting Frame.*	216.14
	TY13036	8 In. Front Thatcher (Extension)	53.50
	BM24000	Thatcher Mounting Frame (X300, X500 M-T)	203.30
		Material Collection System Hoppers:	
	BM21680	14 Bushel Hopper Assembly *Requires Appropriate Rear Bagger Chute Front. Ballast Recommended, Especially on Hills or Inclines.*	934.11
	BM21679	7 Bushel Hopper Assembly *Requires Appropriate Rear Bagger Chute Front. Ballast Recommended, Especially on Hills or Inclines.*	433.36
	AM135486	Loose knit bags for 7 bu. Hopper	See Parts
		Material Collection System Power Flow Blowers:	
	BM22696	48C/48X High-Performance Blower Assembly for Mowers with Rotateable Anti-Scalp Wheels (X300/X500 M-T/X700) *For use with MY2006 X320 (Serial 010001-040000), X324 (Serial 010001-040000), Model X500 M-T Tractor (Serial 010001-020000), MY2008- X320 (Serial 085001-), MY2008- X324 (Serial 085001-), MY2008- X500 (Serial 030001-), and X360. Also for use with SKU21895 (48X with Rotateable Anti-Scalp Wheels) Cartoned Deck.*	541.41
	BM22697	54C/54X/54D High-Performance Blower Assembly (X300/X500 M-T/X700, 1023E, 1025R, 1026R, 2305, 2025R, 2320, 2210 and 4115)	541.41
		Material Collection System Power Flow/Rear Bagger Chutes:	
	BM21682	Power Flow Chute (14 bu)	141.24
	BM21681	Power Flow Chute (7 bu.) *For 48C, 48X, 54C or 54X Series Blowers.*	114.49
	BM20855	Power Flow Chute (MC519/C or X Series Blowers)	85.60
		Miscellaneous:	
	BM17981	12 Volt Work Light Kit	51.36
	TY25866	Battery Charger and Maintainer	See Parts
	BM23057	Brush Guard (X300, X500 M-T)	124.11
	BM23056	Bumper (X300s, X500, X530, X534)	62.06
	TY25341	Debris bag	See Parts
	M88984	Drift Blade *For Snow Blowers. Requires (2) 19H1914 Bolts and (2) N10217 Lock Nuts.*	See Parts
	TY27534	Fuel Protect for Gasoline Engines (8 oz.)	See Parts
	AM119321	Heavy Duty Skid Shoe (1) *For Front Blade. Two required.*	See Parts

Select Series X500 Multi-Terrain Tractor Less Deck, California Model
Continued

CODE	ATTACHMENT IDENTIFIER	DESCRIPTION	SUGGESTED LIST PRICE USD ($)
		ATTACHMENTS FOR FIELD CONVERSION Continued...	
	LG249	Home Maintenance Kit *Fits 2010 and earlier models only (Serial -060000).*	See Parts
	LG265	Home Maintenance Kit *For use with MY2011- (Serial 060001-).*	See Parts
	AM136046	Seat Net Kit	See Parts
	AM122263	Skid Shoe, Heavy Duty Left Hand (1) *For Snow Blower.*	See Parts
	AM122264	Skid Shoe, Heavy Duty Right Hand (1) *For Snow Blower.*	See Parts
	M157831	Skid shoe, Plastic (1) *For 44-, 47-, and 54-in. Snow Blowers. Two required.*	See Parts
	M115237	Spacer	See Parts
	BM23054	Sun Shade (X300/X500 M-T)	161.57
	AM141156	Wheel Cover, 12 in. (Stainless Steel)	See Parts
	AM141154	Wheel Cover, 8 In. (Stainless Steel)	See Parts
		Mower Deck and Mower Deck Attachments:	
	SKU24195	48 in Edge Xtra Deck with Rotateable Anti-Scalp Wheels (48X)	1,000.00
	SKU21897	54 in Edge Xtra Deck (54X)	1,300.00
	M127673	Blade (48C/48X, Mulching)	See Parts
	M145476	Blade (48C/48X, Side Discharge)	See Parts
	M152726	Blade (54C/54X, High Lift)	See Parts
	M145516	Blade (54C/54X, Mulching)	See Parts
	M143520	Blade (54C/54X, Side Discharge)	See Parts
	BM19894	Leaf Bagging Kit (48C/48X Mower) *Contains Three Bolt-on Deck Lips for Improved Bagging of Leaves.*	99.51
	BM20985	Leaf Bagging Kit (54C/54X Mower) *Contains Three Bolt-on Deck Lips for Improved Bagging of Leaves.*	124.11
	AM130907	Mower Deck Leveling Gauge	See Parts
	BM20007	Mulch Kit (48C/48X)	157.29
	BM20827	Mulch Kit (54C/54D/54X)	212.93
		Order Zone:	
	LP3301	125 lb. Select Series Mounted Electric Broadcast Spreader	In Catalog

Select Series X500 Multi-Terrain Tractor Less Deck, California Model
Continued

CODE	ATTACHMENT IDENTIFIER	DESCRIPTION	SUGGESTED LIST PRICE USD ($)
		ATTACHMENTS FOR FIELD CONVERSION Continued...	
	LP22861	25-gal. Mounted Sprayer *Tractors equipped with this sprayer require installation of the mid-mount mower, a front attachment, four front suitcase weights, or two front wheel weights.*	In Catalog
	LP40000	40-In. Tractor Shovel	In Catalog
	LP1002	48-In. / 54-In. Tractor Grass Groomer	In Catalog
	LPJD400	Bucket (5 gallon)	In Catalog
	JD01673	Bucket (6 gallon with lid)	In Catalog
	LPJD301	Bucket Holder (Double)	In Catalog
	LPJD100	Bucket Holder (Single)	In Catalog
	LP33711	Electric Lift Kit *For Snow Blower and Front Blade.*	In Catalog
	LP31357	Integral Hitch, Mechanical	In Catalog
	LP22834	MC542 Material Collection System *Requires 17P Utility Cart, Appropriate Mower Deck Boot Kit, Rear Ballast Recommended, Especially on Hills or Inclines.*	In Catalog
	LP23080	MC542 Mower Deck Boot Kit (48X)	In Catalog
	LP23081	MC542 Mower Deck Boot Kit (54X)	In Catalog
	LP93647	Protective Cover (Large Deluxe)	In Catalog
	LP93917	Riding Mower Standard Cover	In Catalog
		Protection:	
	LP92624	Seat Cover (Deluxe Medium) - Yellow	In Catalog
	LP92324	Seat Cover - Yellow	In Catalog
		Seats / Wheels / Tires:	
	TY24328	Tire Chains (Pair) for 24x12.00-12 In. Drive Tires	See Parts
		Snow Blowers:	
	SKU23045	44 In. Snow Blower (X300's, X500, X520) *Rear weights and tire chains are recommended for additional traction.* *Winter grill cover recommended on air-cooled engines to prevent carburetor icing.*	1,555.00
	AM136645	Lift Assist Spring *Tractors built prior to September 2006 (See sales manual link for tractor serial number breaks.) and shipped with a 48X or 54X Mower Deck require that the original M151924 Lift Assist Spring be replaced with AM136645 Lift Assist Spring for use with a 44-in. snow blower.*	See Parts
	AM136691	Winter Grill Cover *Used on X300s, MY2007- Model X500 (serial 020001-), X530, and MY2011- X534 (serial 060001-).*	See Parts

Select Series X500 Multi-Terrain Tractor Less Deck, California Model

Continued

CODE	ATTACHMENT IDENTIFIER	DESCRIPTION	SUGGESTED LIST PRICE USD ($)
		ATTACHMENTS FOR FIELD CONVERSION Continued...	
	AM136692	Winter Grill Cover *Used on MY2006 Model X500 (Serial -020000), X520, and MY2006-2010 X534 (serial 010001-060000).*	See Parts
		Tillers:	
	SKU23030	30 in Mechanical Tiller (X500, X520, X530, X540) *See Sales Manual for Ballast Requirements.*	1,689.00
		Weights:	
	BM17972	50 Lb. Cast Iron Wheel Weight (1)	128.40
	BM17976	50 Lb. Wheel Weight, Rear Plastic (1) with Mounting Hardware	66.34
	BM17977	Mounting Hardware (1) for Attaching Two 50 lb. Weights to 23 In., 24 In. or 26 In. Tires	20.33
	R66949	Quik-Tatch Weight, 42 Lb.	62.06
	BM23621	Weight Bracket, Front (X300/X500 M-T) *Allows installation of R66949 Quik-Tatch Weights.* *Used on X300s, MY2007- Model X500 (serial 020001-), X530, and MY2011- X534 (serial 060001-).*	58.86
	BM17964	Wheel Weight (Cast Iron, Front, 30 Lb. 8 In.) *For Use on Steered Wheel.*	101.66
	BM17978	Wheel Weight Mounting Hardware (1) for Attaching Front Wheel Weight	10.70
		Wheels and Tires Rear:	
	BM18434	23x10.50-12 In. 4 PR Bar Tires (Rear Pair)	339.19
	BM21977	24X12.00-12 In. 2PR HDAP Tires (Rear Pair)	371.29
	BM21516	24X12.00-12 In. Turf Tires 2PR (Rear)	339.19

SERVICE CONTRACTS - RESIDENTIAL OWNERS/USE

Visit http://www.JohnDeere.com/ServicePlans for more information on John Deere Service Contracts. May not be Available in Parts of the U.S., Not Available in Canada. Price may vary due to driving distance and/or time from machine to dealership location.

	John Deere Extended Service Plan - 5-Year Option *5-year extended service plan. (1- year of extended service protection); 5-years of warranty transportation.*	499.99
	John Deere Extended Service Plan - 6-Year Option *6-year extended service plan. (2- years of extended service protection); 6-years of warranty transportation.*	629.99

Signature Series X710 Tractor Less Deck

Equipment for Base Machine

Signature Series X710 Tractor
POWER SYSTEM:
22 HP *(16.4 kw)
V-Twin Liquid Cooled
Overhead Valves
Full Pressure Lubrication
System with Replaceable Oil Filter
Rubber Mounted Isolated Engine
Dry Type Air Filter and Precleaner
5.2 Gallon (19.7 L) Fuel Tank Capacity
INTEGRATED TRANSAXLE:
2 Pedal Foot Controlled Hydrostatic Transmission
Internal Wet Disk Brakes
Internal Hydraulic PTO Clutch with Modulated PTO Engagement
Traction Assist
2-wheel drive
STEERING:
Hydraulic Power Steering
6 Position Tilt Steering Wheel
OPERATOR STATION:
Illuminated Dash with Gauges and Lights
Hourmeter
Coolant Temperature
Fuel Level
Oil Pressure Light
Battery Charge Light
Park Brake Light
21-in. High Back Seat with Coil Spring Suspension
7 In. Slide Rail Seat Adjustment
14 Position Adjustable Seat
Cruise Control
Reverse Implement Option (RIO)
ELECTRICAL:
12V Electric Start
20 Amp Regulated Alternator
340 CCA Battery
Halogen Headlights, Tail Lights
Rear Work and Backup Lights
Seat, PTO and Brake Interlock Switch
IMPLEMENT LIFT:
"From the Seat" Mower Cut Height Adjustment
Hydraulic with 2 Spool Control Valve
FRAME AND FRONT AXLE:
Robotic MIG Welded Frame
Frame Sides .18 In. (4.6 mm) Thick
Built-In Front Bumper Accepts Four "Quik-Tatch" Weights
Nodular Cast Iron Front Axle
1 In. (25 mm) Front Spindles
Built-In Front Receiver Hitch
18x8.50-8 4 PR Front Turf Tires
26x12.00-12 2 PR Rear Turf Tires
*Engine HP is Provided by the Engine Manufacturer to be Used for Comparison Purposes Only, Actual Operating HP will be Less.

CODE	ATTACHMENT IDENTIFIER	DESCRIPTION	SUGGESTED LIST PRICE USD ($)

Select One Code From Each Required Category

Signature Series X710 Tractor Less Deck

F.O.B. Janesville, Wisconsin

5801M		Signature Series X710 Tractor Less Deck	8,699.00

DESTINATION

001A		United States and Canada	In Base Price
001C		Australia and New Zealand	Same Price
001D		Other	Same Price

ATTACHMENTS FOR FIELD CONVERSION

		Carts / Hitches:	
	BM23989	Drawbar, 1.25 In. (38mm)	35.31
		Engine:	
	AM108146	Spark Arrester Screen for Muffler	See Parts
		Fenders:	
	BM24429	Front Fender Kit (X710, X730, X750)	151.94
		Front Hitch:	
	BM19782	Front Quick-Hitch and Hydraulic Lift (X400/X500 HDGT's, X700's)	692.29

Signature Series X710 Tractor Less Deck
Continued

CODE	ATTACHMENT IDENTIFIER	DESCRIPTION	SUGGESTED LIST PRICE USD ($)
		ATTACHMENTS FOR FIELD CONVERSION Continued...	
		Front PTO:	
	BM24361	2000 RPM Mid-to-Front PTO Kit, 2WD (X400 HDGT's, X700's) *For Homologation Tractors, also Order BM20966 Front PTO Shield. Required to Meet Homologation Standards. Not Required for CE.*	298.53
		Hitch:	
	BM17327	3-Point Hitch (Category 0)	634.51
	BM23882	3-Pt. Hitch, Category 1 (X400/X500 HDGT's, X700's)	634.51
	BM23883	Adaptor Kit, X400/X500 HDGT 3-Point Hitch on X700's *Converts a BM21263 (X400/X500 Cat 1) or BM17327 (Cat 0) for use on X700s.*	78.11
	BM20877	Rear Receiver Hitch Kit	43.87
	LVU12858	iMatch Quick Hitch Bushings	See Parts
	LVB25976	iMatch Quick Hitch Category 1 with adjustable top hook	350.90
		Hydraulics:	
	BM20837	Hydraulic Angling (X400/X500 HDGT's, X700's)	212.93
	BM20761	Hydraulic Coupler Kit *Required on X700, X710, X465, X475 and 425 Tractors.*	54.57
	AM134625	Hydraulic Cylinder Lockout Valve	See Parts
	BM20896	Hydraulic Retro Kit	28.89
		Miscellaneous:	
	BM23588	540 RPM Rear PTO Drive (X700's Starting June 2010 production and beyond-) *For use on X700 Series Tractors produced after mid-June 2010 when new-pitch gears entered production. See sales manual for tractor serial number break and/or verify that the transmission serial number starts with K00.*	960.86
	BM21914	540 RPM Rear PTO Drive (X400/X500 HDGTs, X700's -June 2010 production) *For use on X400/X500 HDGTs and X700 Series Tractors produced through mid-June 2010. See Sales Manual for tractor serial number break and/or verify that the transmission serial number starts with K02 or K03.* *When used on MY2005 and older X400 and X500 HDGTs, also order AM120840 Module.*	960.86
	BM24426	Arm Rest kit	189.39
	BM21332	Attaching Parts for Deluxe High-Back Seat	146.59
	BM24425	Auxiliary Alternator Kit (X710, X730, X734, X738, X739, X700, X720, X724, X728, X729, X475, X485, X575, X585) *Supplements Standard 20 Amp Alternator. Recommended with Heated Cabs.*	388.41
	AM36786	Battery Charger (110 Volt)	See Parts
	BM20714	Click-N-Go Bracket (X400/X500 HDGT's, X700's)	112.36
	BM21490	Deluxe High-Back Seat *Requires BM21332, Attaching Parts when Installing on a Non-Special Edition Tractor.*	554.26

Signature Series X710 Tractor Less Deck
Continued

CODE	ATTACHMENT IDENTIFIER	DESCRIPTION	SUGGESTED LIST PRICE USD ($)
		ATTACHMENTS FOR FIELD CONVERSION Continued...	
	BM20880	Front Brush Guard Kit (X700, X720, X724, X728, X729, X740, X744, X748, X749)	249.31
	BM24375	Front Brush Guard Kit (X710, X730, X734, X738, X739, X750, X744, X788)	249.31
	BM20753	Front Light Kit	207.59
	M150364	Wheel Cover, 12 In. (Chrome)	See Parts
	M114663	Wheel Cover, 12 In. (Yellow Plastic)	See Parts
	M150362	Wheel Cover, 8 In. (Chrome)	See Parts
		Order Zone:	
	LP3301	125 lb. Select Series Mounted Electric Broadcast Spreader	In Catalog
	LP54000	54 In. Tractor Shovel *Requires 54 In. Front Blade. Go to Order Zone for Specific Requirements.*	In Catalog
	LPJD400	Bucket (5 gallon)	In Catalog
	LPJD301	Bucket Holder (Double)	In Catalog
		Seats / Wheels / Tires:	
	TY15958	Tire Chains (Pair) for 26x12-12 Tires	See Parts
		Weights:	
	BM17972	50 Lb. Cast Iron Wheel Weight (1)	128.40
	BM17976	50 Lb. Wheel Weight, Rear Plastic (1) with Mounting Hardware	66.34
	BM17973	72 Lb. Cast Iron Starter Wheel Weight (1)	181.90
	BM24363	9-Weight Front Weight Bracket *For X400/X500 HDGT's, X700's*	188.31
	BW14313	Ballast Box (Category 1, 3-Pt. Hitch)	315.66
	BM20715	Ballast Box (Click-N-Go) (X400/X500 HDGT's, X700's) *Requires BM20714 Click-N-Go Bracket.*	283.56
	BM18101	Mounting Hardware (1) for Attaching 72 Lb. Starter Weight and (2) 50 Lb. Cast Iron Weights on 26 In. Tire	28.89
	BM18089	Mounting Hardware (1) for Attaching 72 Lb. Starter Weight on 26x12-12 Tire	21.40
	BM17977	Mounting Hardware (1) for Attaching Two 50 lb. Weights to 23 In., 24 In. or 26 In. Tires	20.33
	R66949	Quik-Tatch Weight, 42 Lb.	62.06
	BM20779	Rear Click-N-Go Weight Bracket (X400/X500 HDGT's, X700's) *Requires BM20714 Click-N-Go Bracket.*	156.21
	BM17964	Wheel Weight (Cast Iron, Front, 30 Lb. 8 In.) *For Use on Steered Wheel.*	101.66

Signature Series X710 Tractor Less Deck

Continued

CODE	ATTACHMENT IDENTIFIER	DESCRIPTION	SUGGESTED LIST PRICE USD ($)
		ATTACHMENTS FOR FIELD CONVERSION Continued...	
	BM17978	Wheel Weight Mounting Hardware (1) for Attaching Front Wheel Weight	10.70
		Wheels and Tires Front:	
	BM20954	18x8.50-10 In. 4 PR Turf (R3) Front Tires *For X728, X729, X748, X749 and X500 HDGT's.*	286.76
		Wheels and Tires Rear:	
	BM18369	26X12.00-12 In. 4PR Bar Tires (Rear) *Use with Two Wheel Steer Only.*	640.93
	BM22425	26x12.0-12 In. 2PR HDAP Tires (Rear) *Accommodates SKU22260 60-in 7-Iron Mower Deck. Use with Two Wheel Steer Only. Available Feb 2007.*	622.74
	BM18370	26x12.00-12 In. 2 PR Turf Tires (Rear)	486.86
		SERVICE CONTRACTS - RESIDENTIAL OWNERS/USE	
		Visit http://www.JohnDeere.com/ServicePlans for more information on John Deere Service Contracts. May not be Available in Parts of the U.S., Not Available in Canada. Price may vary due to driving distance and/or time from machine to dealership location.	
		John Deere Extended Service Plan - 5-Year Option *5-year extended service plan. (1- year of extended service protection); 5-years of warranty transportation.*	599.99
		John Deere Extended Service Plan - 6-Year Option *6-year extended service plan. (2- years of extended service protection); 6-years of warranty transportation.*	729.99

Signature Series X730 Tractor Less Deck

Equipment for Base Machine

Signature Series X730 Tractor
POWER SYSTEM:
25.5 HP *(19 kw)
V-Twin Liquid Cooled
Electronic Fuel Injection
Overhead Valves
Full Pressure Lubrication
System with Replaceable Oil
Filter
Rubber Mounted Isolated Engine
Dry Type Air Filter and
Precleaner
5.2 Gallon (19.7 L) Fuel
Tank Capacity
INTEGRATED TRANSAXLE:
2 Pedal Foot Controlled
Hydrostatic Transmission
Internal Wet Disk Brakes
Internal Hydraulic PTO Clutch
with Modulated PTO Engagement
Traction Assist
2-wheel drive
STEERING:
Hydraulic Power Steering
6 Position Tilt Steering Wheel
OPERATOR STATION:
Illuminated Dash with Gauges
and Lights
Hourmeter
Coolant Temperature
Fuel Level
Oil Pressure Light
Battery Charge Light
Park Brake Light
21-In. Professional High Back
Seat with 4-Bar suspension
7 In. Slide Rail Seat Adjustment
14 Position Adjustable Seat
Cruise Control
Reverse Implement Option (RIO)
ELECTRICAL:
12V Electric Start
20 Amp Regulated Alternator
340 CCA Battery
Halogen Headlights, Tail Lights
Rear Work and Backup Lights
Seat, PTO and Brake
Interlock Switch
IMPLEMENT LIFT:
"From the Seat" Mower Cut Height
Adjustment
Hydraulic with 2 Spool Control
Valve
4 Hydraulic Outlet Couplers
FRAME AND FRONT AXLE:
Robotic MIG Welded Frame
Frame Sides .18 In. (4.6 mm)
Thick
Built-In Front Bumper Accepts
Four "Quik-Tatch" Weights
Nodular Cast Iron Front Axle
1 In. (25 mm) Front Spindles
Built-In Front Receiver Hitch
18x8.50-8 4 PR Front Turf Tires
26x12.00-12 2 PR Rear Turf
Tires
*Engine HP is Provided by the
Engine Manufacturer to be Used
for Comparison Purposes Only,
Actual Operating HP will be
Less.

CODE	ATTACHMENT IDENTIFIER	DESCRIPTION	SUGGESTED LIST PRICE USD ($)

Select One Code From Each Required Category

Signature Series X730 Tractors Less Deck

F.O.B. Janesville, Wisconsin

5811M		Signature Series X730 Tractor Less Deck	9,299.00

DESTINATION

001A		United States and Canada	In Base Price
001C		Australia and New Zealand	Same Price
001D		Other	Same Price

ATTACHMENTS FOR FIELD CONVERSION

		Carts / Hitches:	
	BM23989	Drawbar, 1.25 In. (38mm)	35.31
		Engine:	
	AM108146	Spark Arrester Screen for Muffler	See Parts
		Fenders:	
	BM24429	Front Fender Kit (X710, X730, X750)	151.94
		Front Hitch:	
	BM19782	Front Quick-Hitch and Hydraulic Lift (X400/X500 HDGT's, X700's)	692.29
		Front PTO:	

Signature Series X730 Tractor Less Deck
Continued

CODE	ATTACHMENT IDENTIFIER	DESCRIPTION	SUGGESTED LIST PRICE USD ($)
		ATTACHMENTS FOR FIELD CONVERSION Continued...	
	BM24361	2000 RPM Mid-to-Front PTO Kit, 2WD (X400 HDGT's, X700's) *For Homologation Tractors, also Order BM20966 Front PTO Shield. Required to Meet Homologation Standards. Not Required for CE.*	298.53
		Hitch:	
	BM17327	3-Point Hitch (Category 0)	634.51
	BM23882	3-Pt. Hitch, Category 1 (X400/X500 HDGT's, X700's)	634.51
	BM23883	Adaptor Kit, X400/X500 HDGT 3-Point Hitch on X700's *Converts a BM21263 (X400/X500 Cat 1) or BM17327 (Cat 0) for use on X700s.*	78.11
	BM20877	Rear Receiver Hitch Kit	43.87
	LVU12858	iMatch Quick Hitch Bushings	See Parts
	LVB25976	iMatch Quick Hitch Category 1 with adjustable top hook	350.90
		Hydraulics:	
	BM20837	Hydraulic Angling (X400/X500 HDGT's, X700's)	212.93
	BM20761	Hydraulic Coupler Kit *Required on X700, X710, X465, X475 and 425 Tractors.*	54.57
	AM134625	Hydraulic Cylinder Lockout Valve	See Parts
	BM20896	Hydraulic Retro Kit	28.89
		Miscellaneous:	
	BM23588	540 RPM Rear PTO Drive (X700's Starting June 2010 production and beyond-) *For use on X700 Series Tractors produced after mid-June 2010 when new-pitch gears entered production. See sales manual for tractor serial number break and/or verify that the transmission serial number starts with K00.*	960.86
	BM21914	540 RPM Rear PTO Drive (X400/X500 HDGTs, X700's -June 2010 production) *For use on X400/X500 HDGTs and X700 Series Tractors produced through mid-June 2010. See Sales Manual for tractor serial number break and/or verify that the transmission serial number starts with K02 or K03.* *When used on MY2005 and older X400 and X500 HDGTs, also order AM120840 Module.*	960.86
	BM24426	Arm Rest kit	189.39
	BM21332	Attaching Parts for Deluxe High-Back Seat	146.59
	BM24425	Auxiliary Alternator Kit (X710, X730, X734, X738, X739, X700, X720, X724, X728, X729, X475, X485, X575, X585) *Supplements Standard 20 Amp Alternator. Recommended with Heated Cabs.*	388.41
	AM36786	Battery Charger (110 Volt)	See Parts
	BM20714	Click-N-Go Bracket (X400/X500 HDGT's, X700's)	112.36
	BM21490	Deluxe High-Back Seat *Requires BM21332, Attaching Parts when Installing on a Non-Special Edition Tractor.*	554.26
	BM20880	Front Brush Guard Kit (X700, X720, X724, X728, X729, X740, X744, X748, X749)	249.31

Signature Series X730 Tractor Less Deck
Continued

CODE	ATTACHMENT IDENTIFIER	DESCRIPTION	SUGGESTED LIST PRICE USD ($)
		ATTACHMENTS FOR FIELD CONVERSION Continued...	
	BM24375	Front Brush Guard Kit (X710, X730, X734, X738, X739, X750, X744, X788)	249.31
	BM20753	Front Light Kit	207.59
	M150363	Wheel Cover, 10 In. (Chrome)	See Parts
	M150364	Wheel Cover, 12 In. (Chrome)	See Parts
	M114663	Wheel Cover, 12 In. (Yellow Plastic)	See Parts
	M150362	Wheel Cover, 8 In. (Chrome)	See Parts
		Order Zone:	
	LP3301	125 lb. Select Series Mounted Electric Broadcast Spreader	In Catalog
	LP54000	54 In. Tractor Shovel *Requires 54 In. Front Blade. Go to Order Zone for Specific Requirements.*	In Catalog
	LPJD400	Bucket (5 gallon)	In Catalog
	LPJD301	Bucket Holder (Double)	In Catalog
		Seats / Wheels / Tires:	
	TY15958	Tire Chains (Pair) for 26x12-12 Tires	See Parts
		Weights:	
	BM17972	50 Lb. Cast Iron Wheel Weight (1)	128.40
	BM17976	50 Lb. Wheel Weight, Rear Plastic (1) with Mounting Hardware	66.34
	BM17973	72 Lb. Cast Iron Starter Wheel Weight (1)	181.90
	BM24363	9-Weight Front Weight Bracket *For X400/X500 HDGT's, X700's*	188.31
	BW14313	Ballast Box (Category 1, 3-Pt. Hitch)	315.66
	BM20715	Ballast Box (Click-N-Go) (X400/X500 HDGT's, X700's) *Requires BM20714 Click-N-Go Bracket.*	283.56
	BM18101	Mounting Hardware (1) for Attaching 72 Lb. Starter Weight and (2) 50 Lb. Cast Iron Weights on 26 In. Tire	28.89
	BM18089	Mounting Hardware (1) for Attaching 72 Lb. Starter Weight on 26x12-12 Tire	21.40
	BM17977	Mounting Hardware (1) for Attaching Two 50 lb. Weights to 23 In., 24 In. or 26 In. Tires	20.33
	R66949	Quik-Tatch Weight, 42 Lb.	62.06
	BM20779	Rear Click-N-Go Weight Bracket (X400/X500 HDGT's, X700's) *Requires BM20714 Click-N-Go Bracket.*	156.21
	BM17964	Wheel Weight (Cast Iron, Front, 30 Lb. 8 In.) *For Use on Steered Wheel.*	101.66

Signature Series X730 Tractor Less Deck
Continued

CODE	ATTACHMENT IDENTIFIER	DESCRIPTION	SUGGESTED LIST PRICE USD ($)
		ATTACHMENTS FOR FIELD CONVERSION Continued...	
	BM17978	Wheel Weight Mounting Hardware (1) for Attaching Front Wheel Weight	10.70
		Wheels and Tires Front:	
	BM20954	18x8.50-10 In. 4 PR Turf (R3) Front Tires *For X728, X729, X748, X749 and X500 HDGT's.*	286.76
		Wheels and Tires Rear:	
	BM18369	26X12.00-12 In. 4PR Bar Tires (Rear) *Use with Two Wheel Steer Only.*	640.93
	BM22425	26x12.0-12 In. 2PR HDAP Tires (Rear) *Accommodates SKU22260 60-in 7-Iron Mower Deck. Use with Two Wheel Steer Only. Available Feb 2007.*	622.74
	BM18370	26x12.00-12 In. 2 PR Turf Tires (Rear)	486.86
		SERVICE CONTRACTS - RESIDENTIAL OWNERS/USE	
		Visit http://www.JohnDeere.com/ServicePlans for more information on John Deere Service Contracts. May not be Available in Parts of the U.S., Not Available in Canada. Price may vary due to driving distance and/or time from machine to dealership location.	
		John Deere Extended Service Plan - 5-Year Option *5-year extended service plan. (1- year of extended service protection); 5-years of warranty transportation.*	599.99
		John Deere Extended Service Plan - 6-Year Option *6-year extended service plan. (2- years of extended service protection); 6-years of warranty transportation.*	729.99

Signature Series X734 4-Wheel Steer Tractor Less Deck

Equipment for Base Machine

Signature Series X734 4-Wheel Steer Tractor
POWER SYSTEM:
25.5 HP *(19 kw)
V-Twin Liquid Cooled Electronic Fuel Injection
Overhead Valves
Full Pressure Lubrication System with Replaceable Oil Filter
Rubber Mounted Isolated Engine
Dry Type Air Filter and Precleaner
5.2 Gallon (19.7 L) Fuel Tank Capacity
INTEGRATED TRANSAXLE:
2 Pedal Foot Controlled Hydrostatic Transmission
Internal Wet Disk Brakes
Internal Hydraulic PTO Clutch with Modulated PTO Engagement
Traction Assist
2-wheel drive
STEERING:
Hydraulic Power Steering
6 Position Tilt Steering Wheel
OPERATOR STATION:
Illuminated Dash with Gauges and Lights
Hourmeter
Coolant Temperature
Fuel Level
Oil Pressure Light
Battery Charge Light
Park Brake Light
21-In. Professional High Back Seat with 4-Bar suspension
7 In. Slide Rail Seat Adjustment
14 Position Adjustable Seat
Cruise Control
Reverse Implement Option (RIO)
ELECTRICAL:
12V Electric Start
20 Amp Regulated Alternator
340 CCA Battery
Halogen Headlights, Tail Lights
Rear Work and Backup Lights
Seat, PTO and Brake Interlock Switch
IMPLEMENT LIFT:
"From the Seat" Mower Cut Height Adjustment
Hydraulic with 2 Spool Control Valve
4 Hydraulic Outlet Couplers
FRAME AND FRONT AXLE:
Robotic MIG Welded Frame
Frame Sides .18 In. (4.6 mm) Thick
Built-In Front Bumper Accepts Four "Quik-Tatch" Weights
Nodular Cast Iron Front Axle
1 In. (25 mm) Front Spindles
Built-In Front Receiver Hitch
18x7.00-8 4 PR Front Turf Tires
26x10.50-12 2 PR Rear Turf Tires
*Engine HP is Provided by the Engine Manufacturer to be Used for Comparison Purposes Only, Actual Operating HP will be Less.

CODE	ATTACHMENT IDENTIFIER	DESCRIPTION	SUGGESTED LIST PRICE USD ($)

Select One Code From Each Required Category

Signature Series X734 Tractors Less Deck

F.O.B. Janesville, Wisconsin

5821M		Signature Series X734 4-Wheel Steer Tractor Less Deck	10,299.00

DESTINATION

001A		United States and Canada	In Base Price
001C		Australia and New Zealand	Same Price
001D		Other	Same Price

ATTACHMENTS FOR FIELD CONVERSION

		Carts / Hitches:	
	BM23989	Drawbar, 1.25 In. (38mm)	35.31
		Engine:	
	AM108146	Spark Arrester Screen for Muffler	See Parts
		Front Hitch:	
	BM19782	Front Quick-Hitch and Hydraulic Lift (X400/X500 HDGT's, X700's)	692.29

Signature Series X734 4-Wheel Steer Tractor Less Deck
Continued

CODE	ATTACHMENT IDENTIFIER	DESCRIPTION	SUGGESTED LIST PRICE USD ($)
		ATTACHMENTS FOR FIELD CONVERSION Continued...	
		Front PTO:	
	BM24361	2000 RPM Mid-to-Front PTO Kit, 2WD (X400 HDGT's, X700's) *For Homologation Tractors, also Order BM20966 Front PTO Shield. Required to Meet Homologation Standards. Not Required for CE.*	298.53
		Hitch:	
	BM17327	3-Point Hitch (Category 0)	634.51
	BM23882	3-Pt. Hitch, Category 1 (X400/X500 HDGT's, X700's)	634.51
	BM23883	Adaptor Kit, X400/X500 HDGT 3-Point Hitch on X700's *Converts a BM21263 (X400/X500 Cat 1) or BM17327 (Cat 0) for use on X700s.*	78.11
	BM20877	Rear Receiver Hitch Kit	43.87
	LVU12858	iMatch Quick Hitch Bushings	See Parts
	LVB25976	iMatch Quick Hitch Category 1 with adjustable top hook	350.90
		Hydraulics:	
	BM20837	Hydraulic Angling (X400/X500 HDGT's, X700's)	212.93
	BM20761	Hydraulic Coupler Kit *Required on X700, X710, X465, X475 and 425 Tractors.*	54.57
	BM20896	Hydraulic Retro Kit	28.89
		Miscellaneous:	
	BM23588	540 RPM Rear PTO Drive (X700's Starting June 2010 production and beyond-) *For use on X700 Series Tractors produced after mid-June 2010 when new-pitch gears entered production. See sales manual for tractor serial number break and/or verify that the transmission serial number starts with K00.*	960.86
	BM21914	540 RPM Rear PTO Drive (X400/X500 HDGTs, X700's -June 2010 production) *For use on X400/X500 HDGTs and X700 Series Tractors produced through mid-June 2010. See Sales Manual for tractor serial number break and/or verify that the transmission serial number starts with K02 or K03.* *When used on MY2005 and older X400 and X500 HDGTs, also order AM120840 Module.*	960.86
	BM24426	Arm Rest kit	189.39
	BM21332	Attaching Parts for Deluxe High-Back Seat	146.59
	BM24425	Auxiliary Alternator Kit (X710, X730, X734, X738, X739, X700, X720, X724, X728, X729, X475, X485, X575, X585) *Supplements Standard 20 Amp Alternator. Recommended with Heated Cabs.*	388.41
	AM36786	Battery Charger (110 Volt)	See Parts
	BM20714	Click-N-Go Bracket (X400/X500 HDGT's, X700's)	112.36
	BM21490	Deluxe High-Back Seat *Requires BM21332, Attaching Parts when Installing on a Non-Special Edition Tractor.*	554.26
	BM20880	Front Brush Guard Kit (X700, X720, X724, X728, X729, X740, X744, X748, X749)	249.31

Signature Series X734 4-Wheel Steer Tractor Less Deck
Continued

CODE	ATTACHMENT IDENTIFIER	DESCRIPTION	SUGGESTED LIST PRICE USD ($)
		ATTACHMENTS FOR FIELD CONVERSION Continued...	
	BM24375	Front Brush Guard Kit (X710, X730, X734, X738, X739, X750, X744, X788)	249.31
	BM20753	Front Light Kit	207.59
	TY25326	Tire Chains for 26x10.50-12 Turf Drive Tires *For all Wheel Steer Tractors.*	See Parts
	M150364	Wheel Cover, 12 In. (Chrome)	See Parts
	M114663	Wheel Cover, 12 In. (Yellow Plastic)	See Parts
	M150362	Wheel Cover, 8 In. (Chrome)	See Parts
		Order Zone:	
	LP3301	125 lb. Select Series Mounted Electric Broadcast Spreader	In Catalog
	LP54000	54 In. Tractor Shovel *Requires 54 In. Front Blade. Go to Order Zone for Specific Requirements.*	In Catalog
		Weights:	
	BM17972	50 Lb. Cast Iron Wheel Weight (1)	128.40
	BM24363	9-Weight Front Weight Bracket *For X400/X500 HDGT's, X700's*	188.31
	BW14313	Ballast Box (Category 1, 3-Pt. Hitch)	315.66
	BM20715	Ballast Box (Click-N-Go) (X400/X500 HDGT's, X700's) *Requires BM20714 Click-N-Go Bracket.*	283.56
	BM17977	Mounting Hardware (1) for Attaching Two 50 lb. Weights to 23 In., 24 In. or 26 In. Tires	20.33
	BM18094	Mounting Hardware (1), for Attaching 1 Wheel Weight. 4-Wheel Steer Only.	21.40
	R66949	Quik-Tatch Weight, 42 Lb.	62.06
	BM20779	Rear Click-N-Go Weight Bracket (X400/X500 HDGT's, X700's) *Requires BM20714 Click-N-Go Bracket.*	156.21
	BM17964	Wheel Weight (Cast Iron, Front, 30 Lb. 8 In.) *For Use on Steered Wheel.*	101.66
	BM17978	Wheel Weight Mounting Hardware (1) for Attaching Front Wheel Weight	10.70
		Wheels and Tires Rear:	
	BM20955	26x10.50-12 In. 2 PR Turf Tires (Rear) (4-Wheel Steer Only)	486.86

SERVICE CONTRACTS - RESIDENTIAL OWNERS/USE

Visit http://www.JohnDeere.com/ServicePlans for more information on John Deere Service Contracts. May not be Available in Parts of the U.S., Not Available in Canada. Price may vary due to driving distance and/or time from machine to dealership location.

Signature Series X734 4-Wheel Steer Tractor Less Deck

Continued

CODE	ATTACHMENT IDENTIFIER	DESCRIPTION	SUGGESTED LIST PRICE USD ($)
		SERVICE CONTRACTS - RESIDENTIAL OWNERS/USE Continued...	
		John Deere Extended Service Plan - 5-Year Option *5-year extended service plan. (1- year of extended service protection);* *5-years of warranty transportation.*	599.99
		John Deere Extended Service Plan - 6-Year Option *6-year extended service plan. (2- years of extended service protection);* *6-years of warranty transportation.*	729.99

Signature Series X738 Full Time 4-Wheel Drive Tractor Less Deck

Equipment for Base Machine

Signature Series X738 Tractor with HDAP Tires
POWER SYSTEM:
25.5 HP *(19 kw)
V-Twin Liquid Cooled
Electronic Fuel Injection
Overhead Valves
Full Pressure Lubrication System with Replaceable Oil Filter
Rubber Mounted Isolated Engine
Dry Type Air Filter and Precleaner
5.2 Gallon (19.7 L) Fuel
INTEGRATED TRANSAXLE:
2 Pedal Foot Controlled Hydrostatic Transmission
Internal Wet Disk Brakes
Internal Hydraulic PTO Clutch with Modulated PTO Engagement
Traction Assist
Full Time 4-Wheel Drive
STEERING:
Hydraulic Power Steering
6 Position Tilt Steering Wheel
OPERATOR STATION:
Illuminated Dash with Gauges and Lights
Hourmeter
Coolant Temperature
Fuel Level
Oil Pressure Light
Battery Charge Light
Park Brake Light
21-In. Professional High Back Seat with 4-Bar suspension
7 In. Slide Rail Seat Adjustment
14 Position Adjustable Seat
Cruise Control
Reverse Implement Option (RIO)
ELECTRICAL:
12V Electric Start
20 Amp Regulated Alternator
340 CCA Battery
Halogen Headlights, Tail Lights
Rear Work and Backup Lights
Seat, PTO and Brake Interlock Switch
IMPLEMENT LIFT:
"From the Seat" Mower Cut Height Adjustment
Hydraulic with 2 Spool Control Valve
4 Hydraulic Outlet Couplers
FRAME AND FRONT AXLE:
Robotic MIG Welded Frame
Frame Sides .18 In. (4.6 mm) Thick
Built-In Front Bumper Accepts Four "Quik-Tatch" Weights
Nodular Cast Iron Front Axle
1 In. (25 mm) Front Spindles
Built-In Front Receiver Hitch
18x8.50-10 4 PR Front HDAP Tires
26x12.00-12 2 PR Rear HDAP Tires
*Engine HP is Provided by the Engine Manufacturer to be Used for Comparison Purposes Only, Actual Operating HP will be Less.

CODE	ATTACHMENT IDENTIFIER	DESCRIPTION	SUGGESTED LIST PRICE USD ($)

Select One Code From Each Required Category

Signature Series X738 Tractor with HDAP Tires Less Deck

F.O.B. Janesville, Wisconsin

5831M		Signature Series X738 Full Time 4-Wheel Drive Tractor Less Deck	10,899.00

DESTINATION

001A		United States and Canada	In Base Price
001C		Australia and New Zealand	Same Price
001D		Other	Same Price

ATTACHMENTS FOR FIELD CONVERSION

		Carts / Hitches:	
	BM23989	Drawbar, 1.25 In. (38mm)	35.31
		Engine:	
	AM108146	Spark Arrester Screen for Muffler	See Parts
		Fenders:	
	BM24430	Front Fender Kit (X738, X739, X758)	151.94
		Front Hitch:	
	BM19782	Front Quick-Hitch and Hydraulic Lift (X400/X500 HDGT's, X700's)	692.29
		Front PTO:	

Signature Series X738 Full Time 4-Wheel Drive Tractor Less Deck
Continued

CODE	ATTACHMENT IDENTIFIER	DESCRIPTION	SUGGESTED LIST PRICE USD ($)
		ATTACHMENTS FOR FIELD CONVERSION Continued...	
	BM24362	4WD 2000 RPM Front PTO (X500 HDGT's, X700's) *For European RII Homologation Tractors, also Order BM20978 Front PTO Shield. Required to Meet Homologation Standards. Not Required for CE.*	298.53
		Hitch:	
	BM17327	3-Point Hitch (Category 0)	634.51
	BM23882	3-Pt. Hitch, Category 1 (X400/X500 HDGT's, X700's)	634.51
	BM23883	Adaptor Kit, X400/X500 HDGT 3-Point Hitch on X700's *Converts a BM21263 (X400/X500 Cat 1) or BM17327 (Cat 0) for use on X700s.*	78.11
	BM20877	Rear Receiver Hitch Kit	43.87
	LVU12858	iMatch Quick Hitch Bushings	See Parts
	LVB25976	iMatch Quick Hitch Category 1 with adjustable top hook	350.90
		Hydraulics:	
	BM20837	Hydraulic Angling (X400/X500 HDGT's, X700's)	212.93
	BM20761	Hydraulic Coupler Kit *Required on X700, X710, X465, X475 and 425 Tractors.*	54.57
	AM134625	Hydraulic Cylinder Lockout Valve	See Parts
	BM20896	Hydraulic Retro Kit	28.89
		Miscellaneous:	
	BM23588	540 RPM Rear PTO Drive (X700's Starting June 2010 production and beyond-) *For use on X700 Series Tractors produced after mid-June 2010 when new-pitch gears entered production. See sales manual for tractor serial number break and/or verify that the transmission serial number starts with K00.*	960.86
	BM21914	540 RPM Rear PTO Drive (X400/X500 HDGTs, X700's -June 2010 production) *For use on X400/X500 HDGTs and X700 Series Tractors produced through mid-June 2010. See Sales Manual for tractor serial number break and/or verify that the transmission serial number starts with K02 or K03.* *When used on MY2005 and older X400 and X500 HDGTs, also order AM120840 Module.*	960.86
	BM24426	Arm Rest kit	189.39
	BM21332	Attaching Parts for Deluxe High-Back Seat	146.59
	BM24425	Auxiliary Alternator Kit (X710, X730, X734, X738, X739, X700, X720, X724, X728, X729, X475, X485, X575, X585) *Supplements Standard 20 Amp Alternator. Recommended with Heated Cabs.*	388.41
	AM36786	Battery Charger (110 Volt)	See Parts
	BM20714	Click-N-Go Bracket (X400/X500 HDGT's, X700's)	112.36
	BM21490	Deluxe High-Back Seat *Requires BM21332, Attaching Parts when Installing on a Non-Special Edition Tractor.*	554.26
	BM20880	Front Brush Guard Kit (X700, X720, X724, X728, X729, X740, X744, X748, X749)	249.31

Signature Series X738 Full Time 4-Wheel Drive Tractor Less Deck
Continued

CODE	ATTACHMENT IDENTIFIER	DESCRIPTION	SUGGESTED LIST PRICE USD ($)
		ATTACHMENTS FOR FIELD CONVERSION Continued...	
	BM24375	Front Brush Guard Kit (X710, X730, X734, X738, X739, X750, X744, X788)	249.31
	BM20753	Front Light Kit	207.59
	M150363	Wheel Cover, 10 In. (Chrome)	See Parts
	M150364	Wheel Cover, 12 In. (Chrome)	See Parts
	M114663	Wheel Cover, 12 In. (Yellow Plastic)	See Parts
		Order Zone:	
	LP3301	125 lb. Select Series Mounted Electric Broadcast Spreader	In Catalog
	LP54000	54 In. Tractor Shovel *Requires 54 In. Front Blade. Go to Order Zone for Specific Requirements.*	In Catalog
	LPJD400	Bucket (5 gallon)	In Catalog
	LPJD301	Bucket Holder (Double)	In Catalog
		Seats / Wheels / Tires:	
	TY15958	Tire Chains (Pair) for 26x12-12 Tires	See Parts
		Weights:	
	BM17972	50 Lb. Cast Iron Wheel Weight (1)	128.40
	BM17976	50 Lb. Wheel Weight, Rear Plastic (1) with Mounting Hardware	66.34
	BM17973	72 Lb. Cast Iron Starter Wheel Weight (1)	181.90
	BM24363	9-Weight Front Weight Bracket *For X400/X500 HDGT's, X700's*	188.31
	BW14313	Ballast Box (Category 1, 3-Pt. Hitch)	315.66
	BM20715	Ballast Box (Click-N-Go) (X400/X500 HDGT's, X700's) *Requires BM20714 Click-N-Go Bracket.*	283.56
	BM18101	Mounting Hardware (1) for Attaching 72 Lb. Starter Weight and (2) 50 Lb. Cast Iron Weights on 26 In. Tire	28.89
	BM18089	Mounting Hardware (1) for Attaching 72 Lb. Starter Weight on 26x12-12 Tire	21.40
	BM17977	Mounting Hardware (1) for Attaching Two 50 lb. Weights to 23 In., 24 In. or 26 In. Tires	20.33
	R66949	Quik-Tatch Weight, 42 Lb.	62.06
	BM20779	Rear Click-N-Go Weight Bracket (X400/X500 HDGT's, X700's) *Requires BM20714 Click-N-Go Bracket.*	156.21
		Wheels and Tires Front:	
	BM20954	18x8.50-10 In. 4 PR Turf (R3) Front Tires *For X728, X729, X748, X749 and X500 HDGT's.*	286.76
	BM20952	18x8.50-10 In. 4PR HDAP Tires	334.91

Signature Series X738 Full Time 4-Wheel Drive Tractor Less Deck
Continued

CODE	ATTACHMENT IDENTIFIER	DESCRIPTION	SUGGESTED LIST PRICE USD ($)
		ATTACHMENTS FOR FIELD CONVERSION Continued...	
		Wheels and Tires Rear:	
	BM18369	26X12.00-12 In. 4PR Bar Tires (Rear) *Use with Two Wheel Steer Only.*	640.93
	BM22425	26x12.0-12 In. 2PR HDAP Tires (Rear) *Accommodates SKU22260 60-in 7-Iron Mower Deck. Use with Two Wheel Steer Only. Available Feb 2007.*	622.74
	BM18370	26x12.00-12 In. 2 PR Turf Tires (Rear)	486.86
		SERVICE CONTRACTS - RESIDENTIAL OWNERS/USE	
		Visit http://www.JohnDeere.com/ServicePlans for more information on John Deere Service Contracts. May not be Available in Parts of the U.S., Not Available in Canada. Price may vary due to driving distance and/or time from machine to dealership location.	
		John Deere Extended Service Plan - 5-Year Option *5-year extended service plan. (1- year of extended service protection); 5-years of warranty transportation.*	599.99
		John Deere Extended Service Plan - 6-Year Option *6-year extended service plan. (2- years of extended service protection); 6-years of warranty transportation.*	729.99

Signature Series X739 4-Wheel Steer 4-Wheel Drive Tractor Less Deck

Equipment for Base Machine

Signature Series X739 4-Wheel Steer 4 Wheel Drive Tractor
POWER SYSTEM:
25.5 HP *(19 kw)
V-Twin Liquid Cooled
Electronic Fuel Injection
Overhead Valves
Full Pressure Lubrication
System with Replaceable Oil Filter
Rubber Mounted Isolated Engine
Dry Type Air Filter and Precleaner
5.2 Gallon (19.7 L) Fuel Tank Capacity
INTEGRATED TRANSAXLE:
2 Pedal Foot Controlled Hydrostatic Transmission
Internal Wet Disk Brakes
Internal Hydraulic PTO Clutch with Modulated PTO Engagement
Traction Assist
Full-Time 4-Wheel Drive
STEERING:
Hydraulic Power Steering
6 Position Tilt Steering Wheel
OPERATOR STATION:
Illuminated Dash with Gauges and Lights
Hourmeter
Coolant Temperature
Fuel Level
Oil Pressure Light
Battery Charge Light
Park Brake Light
21-In. Professional High Back Seat
with 4-Bar suspension
7 In. Slide Rail Seat Adjustment
14 Position Adjustable Seat
Cruise Control
Reverse Implement Option (RIO)
ELECTRICAL:
12V Electric Start
20 Amp Regulated Alternator
340 CCA Battery
Halogen Headlights, Tail Lights
Rear Work and Backup Lights
Seat, PTO and Brake Interlock Switch
IMPLEMENT LIFT:
"From the Seat" Mower Cut Height Adjustment
Hydraulic with 2 Spool Control Valve
4 Hydraulic Outlet Couplers
FRAME AND FRONT AXLE:
Robotic MIG Welded Frame
Frame Sides .18 In. (4.6 mm) Thick
Built-In Front Bumper Accepts Four "Quik-Tatch" Weights
Nodular Cast Iron Front Axle
1 In. (25 mm) Front Spindles
Built-In Front Receiver Hitch
18x8.50-10 4 PR Front HDAP Tires
26x12.00-12 2 PR Rear HDAP Tires
*Engine HP is Provided by the Engine Manufacturer to be Used for Comparison Purposes Only, Actual Operating HP will be Less.

CODE	ATTACHMENT IDENTIFIER	DESCRIPTION	SUGGESTED LIST PRICE USD ($)

Select One Code From Each Required Category

Signature Series X739 4-Wheel Steer 4-Wheel Drive Tractor Less Deck

F.O.B. Janesville, Wisconsin

5841M		Signature Series X739 4-Wheel Steer 4-Wheel Drive Tractor Less Deck	11,549.00

DESTINATION

001A		United States and Canada	In Base Price
001C		Australia and New Zealand	Same Price
001D		Other	Same Price

ATTACHMENTS FOR FIELD CONVERSION

		Carts / Hitches:	
	BM23989	Drawbar, 1.25 In. (38mm)	35.31
		Engine:	
	AM108146	Spark Arrester Screen for Muffler	See Parts
		Fenders:	
	BM24430	Front Fender Kit (X738, X739, X758)	151.94
		Front Hitch:	
	BM19782	Front Quick-Hitch and Hydraulic Lift (X400/X500 HDGT's, X700's)	692.29

Signature Series X739 4-Wheel Steer 4-Wheel Drive Tractor Less Deck
Continued

CODE	ATTACHMENT IDENTIFIER	DESCRIPTION	SUGGESTED LIST PRICE USD ($)
		ATTACHMENTS FOR FIELD CONVERSION Continued...	
		Front PTO:	
	BM24362	4WD 2000 RPM Front PTO (X500 HDGT's, X700's) *For European RII Homologation Tractors, also Order BM20978 Front PTO Shield. Required to Meet Homologation Standards. Not Required for CE.*	298.53
		Hitch:	
	BM17327	3-Point Hitch (Category 0)	634.51
	BM23882	3-Pt. Hitch, Category 1 (X400/X500 HDGT's, X700's)	634.51
	BM23883	Adaptor Kit, X400/X500 HDGT 3-Point Hitch on X700's *Converts a BM21263 (X400/X500 Cat 1) or BM17327 (Cat 0) for use on X700s.*	78.11
	BM20877	Rear Receiver Hitch Kit	43.87
	LVU12858	iMatch Quick Hitch Bushings	See Parts
	LVB25976	iMatch Quick Hitch Category 1 with adjustable top hook	350.90
		Hydraulics:	
	BM20837	Hydraulic Angling (X400/X500 HDGT's, X700's)	212.93
	BM20761	Hydraulic Coupler Kit *Required on X700, X710, X465, X475 and 425 Tractors.*	54.57
	AM134625	Hydraulic Cylinder Lockout Valve	See Parts
	BM20896	Hydraulic Retro Kit	28.89
		Miscellaneous:	
	BM23588	540 RPM Rear PTO Drive (X700's Starting June 2010 production and beyond-) *For use on X700 Series Tractors produced after mid-June 2010 when new-pitch gears entered production. See sales manual for tractor serial number break and/or verify that the transmission serial number starts with K00.*	960.86
	BM21914	540 RPM Rear PTO Drive (X400/X500 HDGTs, X700's -June 2010 production) *For use on X400/X500 HDGTs and X700 Series Tractors produced through mid-June 2010. See Sales Manual for tractor serial number break and/or verify that the transmission serial number starts with K02 or K03.* *When used on MY2005 and older X400 and X500 HDGTs, also order AM120840 Module.*	960.86
	BM24426	Arm Rest kit	189.39
	BM21332	Attaching Parts for Deluxe High-Back Seat	146.59
	BM24425	Auxiliary Alternator Kit (X710, X730, X734, X738, X739, X700, X720, X724, X728, X729, X475, X485, X575, X585) *Supplements Standard 20 Amp Alternator. Recommended with Heated Cabs.*	388.41
	AM36786	Battery Charger (110 Volt)	See Parts
	BM20714	Click-N-Go Bracket (X400/X500 HDGT's, X700's)	112.36
	BM21490	Deluxe High-Back Seat *Requires BM21332, Attaching Parts when Installing on a Non-Special Edition Tractor.*	554.26

Signature Series X739 4-Wheel Steer 4-Wheel Drive Tractor Less Deck
Continued

CODE	ATTACHMENT IDENTIFIER	DESCRIPTION	SUGGESTED LIST PRICE USD ($)
		ATTACHMENTS FOR FIELD CONVERSION Continued...	
	BM20880	Front Brush Guard Kit (X700, X720, X724, X728, X729, X740, X744, X748, X749)	249.31
	BM24375	Front Brush Guard Kit (X710, X730, X734, X738, X739, X750, X744, X788)	249.31
	BM20753	Front Light Kit	207.59
	M150363	Wheel Cover, 10 In. (Chrome)	See Parts
	M150364	Wheel Cover, 12 In. (Chrome)	See Parts
	M114663	Wheel Cover, 12 In. (Yellow Plastic)	See Parts
	BM22725	Wheel Spacer Kit *For all Wheel Steer Tractors when Installing TY15956 Chains.*	157.29
		Order Zone:	
	LP3301	125 lb. Select Series Mounted Electric Broadcast Spreader	In Catalog
	LP54000	54 In. Tractor Shovel *Requires 54 In. Front Blade. Go to Order Zone for Specific Requirements.*	In Catalog
	LPJD400	Bucket (5 gallon)	In Catalog
	LPJD301	Bucket Holder (Double)	In Catalog
		Seats / Wheels / Tires:	
	TY15958	Tire Chains (Pair) for 26x12-12 Tires	See Parts
		Weights:	
	BM17972	50 Lb. Cast Iron Wheel Weight (1)	128.40
	BM24363	9-Weight Front Weight Bracket *For X400/X500 HDGT's, X700's*	188.31
	BW14313	Ballast Box (Category 1, 3-Pt. Hitch)	315.66
	BM20715	Ballast Box (Click-N-Go) (X400/X500 HDGT's, X700's) *Requires BM20714 Click-N-Go Bracket.*	283.56
	BM17977	Mounting Hardware (1) for Attaching Two 50 lb. Weights to 23 In., 24 In. or 26 In. Tires	20.33
	BM18094	Mounting Hardware (1), for Attaching 1 Wheel Weight. 4-Wheel Steer Only.	21.40
	R66949	Quik-Tatch Weight, 42 Lb.	62.06
	BM20779	Rear Click-N-Go Weight Bracket (X400/X500 HDGT's, X700's) *Requires BM20714 Click-N-Go Bracket.*	156.21
		Wheels and Tires Front:	
	BM20954	18x8.50-10 In. 4 PR Turf (R3) Front Tires *For X728, X729, X748, X749 and X500 HDGT's.*	286.76
	BM20952	18x8.50-10 In. 4PR HDAP Tires	334.91

Signature Series X739 4-Wheel Steer 4-Wheel Drive Tractor Less Deck

Continued

CODE	ATTACHMENT IDENTIFIER	DESCRIPTION	SUGGESTED LIST PRICE USD ($)
		ATTACHMENTS FOR FIELD CONVERSION Continued...	
		Wheels and Tires Rear:	
	BM22554	26X12.0-12 In. 2PR HDAP Tires (Rear X729, X749)	622.74
	BM20955	26x10.50-12 In. 2 PR Turf Tires (Rear) (4-Wheel Steer Only)	486.86
		SERVICE CONTRACTS - RESIDENTIAL OWNERS/USE	
		Visit http://www.JohnDeere.com/ServicePlans for more information on John Deere Service Contracts. May not be Available in Parts of the U.S., Not Available in Canada. Price may vary due to driving distance and/or time from machine to dealership location.	
		John Deere Extended Service Plan - 5-Year Option *5-year extended service plan. (1- year of extended service protection); 5-years of warranty transportation.*	599.99
		John Deere Extended Service Plan - 6-Year Option *6-year extended service plan. (2- years of extended service protection); 6-years of warranty transportation.*	729.99

Signature Series X750 Tractor Less Deck

Equipment for Base Machine

Signature Series X750 Tractor
POWER SYSTEM:
24 HP *(17.9 kw)
Final Tier IV Emission Compliant
3-Cylinder Liquid
  Cooled Diesel
Overhead Valves
Full Pressure Lubrication
System with Replaceable Oil
  Filter
Rubber Mounted Isolated Engine
Dry Type Two Element Heavy Duty
Air Filter with Air Restriction
Indicator
6.5 Gallon (24.6 L) Fuel Tank
Capacity
INTEGRATED TRANSAXLE:
2 Pedal Foot Controlled
Hydrostatic Transmission
Internal Wet Disk Brakes
Internal Hydraulic PTO Clutch
with Modulated PTO Engagement
Traction Assist
2-wheel drive
STEERING:
Hydraulic Power Steering
6 Position Tilt Steering Wheel
OPERATOR STATION:
Illuminated Dash with Gauges and
Lights
Hourmeter
Coolant Temperature
Fuel Level
Oil Pressure Light
Battery Charge Light
Park Brake Light
Restricted Air Filter Light
Glow Plug Wait Light
21-In. Professional High Back
Seat with 4-Bar suspension
7 In. Slide Rail Seat Adjustment
14 Position Adjustable Seat
Cruise Control
Reverse Implement Option (RIO)
ELECTRICAL:
12V Electric Start
40 Amp Regulated Alternator
500 CCA Battery
Halogen Headlights, Tail Lights
Rear Work and Backup Lights
Seat, PTO and Brake
Interlock Switch
IMPLEMENT LIFT:
"From the Seat" Mower Cut Height
Adjustment
Hydraulic with 2 Spool Control
Valve
4 Hydraulic Outlet Couplers
FRAME AND FRONT AXLE:
Robotic MIG Welded Frame
Frame Sides .18 In. (4.6 mm)
Thick
Built-In Front Bumper Accepts
Four "Quik-Tatch" Weights
Nodular Cast Iron Front Axle
1 In. (25 mm) Front Spindles
Built-In Front Receiver Hitch
18x8.50-8 4 PR Front Turf Tires
26x12.00-12 2 PR Rear Turf Tires
*Engine HP is Provided by the
  Engine Manufacturer to be Used
  for Comparison Purposes Only,
    Actual Operating HP will be
    Less.

CODE	ATTACHMENT IDENTIFIER	DESCRIPTION	SUGGESTED LIST PRICE USD ($)

Select One Code From Each Required Category

Signature Series X750 Tractor Less Deck

F.O.B. Janesville, Wisconsin

5851M		Signature Series X750 Tractor Less Deck	10,499.00

DESTINATION

001A		United States and Canada	In Base Price
001C		Australia and New Zealand	Same Price
001D		Other	Same Price
0195		Mexico	Same Price

ATTACHMENTS FOR FIELD CONVERSION

		Carts / Hitches:	
	BM23989	Drawbar, 1.25 In. (38mm)	35.31
		Engine:	
	AM134805	Engine Block Heater Adapter	See Parts
	MIA881629	Engine Block Heater Adapter	See Parts

Signature Series X750 Tractor Less Deck
Continued

CODE	ATTACHMENT IDENTIFIER	DESCRIPTION	SUGGESTED LIST PRICE USD ($)
		ATTACHMENTS FOR FIELD CONVERSION Continued...	
	AR87167	Engine Coolant Heater (110 Volt) *Requires MIA881626 Engine Block Heater Adapter, (2) 19M7868 Bolts and (1) M87940 Spacer (Serial # 060001-).* *Requires AM134805 Engine Block Heater Adapter (Serial # -060000).*	See Parts
	AM108146	Spark Arrester Screen for Muffler	See Parts
		Fenders:	
	BM24429	Front Fender Kit (X710, X730, X750)	151.94
		Front Hitch:	
	BM19782	Front Quick-Hitch and Hydraulic Lift (X400/X500 HDGT's, X700's)	692.29
		Front PTO:	
	BM24361	2000 RPM Mid-to-Front PTO Kit, 2WD (X400 HDGT's, X700's) *For Homologation Tractors, also Order BM20966 Front PTO Shield. Required to Meet Homologation Standards. Not Required for CE.*	298.53
		Hitch:	
	BM17327	3-Point Hitch (Category 0)	634.51
	BM23882	3-Pt. Hitch, Category 1 (X400/X500 HDGT's, X700's)	634.51
	BM23883	Adaptor Kit, X400/X500 HDGT 3-Point Hitch on X700's *Converts a BM21263 (X400/X500 Cat 1) or BM17327 (Cat 0) for use on X700s.*	78.11
	BM20877	Rear Receiver Hitch Kit	43.87
	LVU12858	iMatch Quick Hitch Bushings	See Parts
	LVB25976	iMatch Quick Hitch Category 1 with adjustable top hook	350.90
		Hydraulics:	
	BM20837	Hydraulic Angling (X400/X500 HDGT's, X700's)	212.93
	BM20761	Hydraulic Coupler Kit *Required on X700, X710, X465, X475 and 425 Tractors.*	54.57
	AM134625	Hydraulic Cylinder Lockout Valve	See Parts
	BM20896	Hydraulic Retro Kit	28.89
		Miscellaneous:	
	BM23588	540 RPM Rear PTO Drive (X700's Starting June 2010 production and beyond-) *For use on X700 Series Tractors produced after mid-June 2010 when new-pitch gears entered production. See sales manual for tractor serial number break and/or verify that the transmission serial number starts with K00.*	960.86
	BM21914	540 RPM Rear PTO Drive (X400/X500 HDGTs, X700's -June 2010 production) *For use on X400/X500 HDGTs and X700 Series Tractors produced through mid-June 2010. See Sales Manual for tractor serial number break and/or verify that the transmission serial number starts with K02 or K03.* *When used on MY2005 and older X400 and X500 HDGTs, also order AM120840 Module.*	960.86
	BM20990	Alternator Kit, 40 Amp (X740, X744, X748, X750, X754, X758, X495, X595) *Replaces Standard 20 Amp Alternator Recmmended with Heated Cab. Standard Equipment on MY2007 (Serial 020001-).*	499.69

Signature Series X750 Tractor Less Deck
Continued

CODE	ATTACHMENT IDENTIFIER	DESCRIPTION	SUGGESTED LIST PRICE USD ($)
		ATTACHMENTS FOR FIELD CONVERSION Continued...	
	BM24426	Arm Rest kit	189.39
	BM21332	Attaching Parts for Deluxe High-Back Seat	146.59
	AM36786	Battery Charger (110 Volt)	See Parts
	BM20714	Click-N-Go Bracket (X400/X500 HDGT's, X700's)	112.36
	BM21490	Deluxe High-Back Seat *Requires BM21332, Attaching Parts when Installing on a Non-Special Edition Tractor.*	554.26
	BM20880	Front Brush Guard Kit (X700, X720, X724, X728, X729, X740, X744, X748, X749)	249.31
	BM24375	Front Brush Guard Kit (X710, X730, X734, X738, X739, X750, X744, X788)	249.31
	BM20753	Front Light Kit	207.59
	M150364	Wheel Cover, 12 In. (Chrome)	See Parts
	M114663	Wheel Cover, 12 In. (Yellow Plastic)	See Parts
	M150362	Wheel Cover, 8 In. (Chrome)	See Parts
		Order Zone:	
	LP3301	125 lb. Select Series Mounted Electric Broadcast Spreader	In Catalog
	LP54000	54 In. Tractor Shovel *Requires 54 In. Front Blade. Go to Order Zone for Specific Requirements.*	In Catalog
	LPJD400	Bucket (5 gallon)	In Catalog
	LPJD301	Bucket Holder (Double)	In Catalog
		Seats / Wheels / Tires:	
	TY15958	Tire Chains (Pair) for 26x12-12 Tires	See Parts
		Weights:	
	BM17972	50 Lb. Cast Iron Wheel Weight (1)	128.40
	BM17976	50 Lb. Wheel Weight, Rear Plastic (1) with Mounting Hardware	66.34
	BM17973	72 Lb. Cast Iron Starter Wheel Weight (1)	181.90
	BM24363	9-Weight Front Weight Bracket *For X400/X500 HDGT's, X700's*	188.31
	BW14313	Ballast Box (Category 1, 3-Pt. Hitch)	315.66
	BM20715	Ballast Box (Click-N-Go) (X400/X500 HDGT's, X700's) *Requires BM20714 Click-N-Go Bracket.*	283.56
	BM18101	Mounting Hardware (1) for Attaching 72 Lb. Starter Weight and (2) 50 Lb. Cast Iron Weights on 26 In. Tire	28.89
	BM18089	Mounting Hardware (1) for Attaching 72 Lb. Starter Weight on 26x12-12 Tire	21.40

Signature Series X750 Tractor Less Deck

Continued

CODE	ATTACHMENT IDENTIFIER	DESCRIPTION	SUGGESTED LIST PRICE USD ($)
		ATTACHMENTS FOR FIELD CONVERSION Continued...	
	BM17977	Mounting Hardware (1) for Attaching Two 50 lb. Weights to 23 In., 24 In. or 26 In. Tires	20.33
	R66949	Quik-Tatch Weight, 42 Lb.	62.06
	BM20779	Rear Click-N-Go Weight Bracket (X400/X500 HDGT's, X700's) *Requires BM20714 Click-N-Go Bracket.*	156.21
	BM17964	Wheel Weight (Cast Iron, Front, 30 Lb. 8 In.) *For Use on Steered Wheel.*	101.66
	BM17978	Wheel Weight Mounting Hardware (1) for Attaching Front Wheel Weight	10.70
		Wheels and Tires Front:	
	BM20954	18x8.50-10 In. 4 PR Turf (R3) Front Tires *For X728, X729, X748, X749 and X500 HDGT's.*	286.76
		Wheels and Tires Rear:	
	BM18369	26X12.00-12 In. 4PR Bar Tires (Rear) *Use with Two Wheel Steer Only.*	640.93
	BM22425	26x12.0-12 In. 2PR HDAP Tires (Rear) *Accommodates SKU22260 60-in 7-Iron Mower Deck. Use with Two Wheel Steer Only. Available Feb 2007.*	622.74
	BM18370	26x12.00-12 In. 2 PR Turf Tires (Rear)	486.86
		SERVICE CONTRACTS - RESIDENTIAL OWNERS/USE	
		Visit http://www.JohnDeere.com/ServicePlans for more information on John Deere Service Contracts. May not be Available in Parts of the U.S., Not Available in Canada. Price may vary due to driving distance and/or time from machine to dealership location.	
		John Deere Extended Service Plan - 5-Year Option *5-year extended service plan. (1- year of extended service protection); 5-years of warranty transportation.*	599.99
		John Deere Extended Service Plan - 6-Year Option *6-year extended service plan. (2- years of extended service protection); 6-years of warranty transportation.*	729.99

Signature Series X754 4-Wheel Steer Tractor Less Deck

Equipment for Base Machine

Signature Series X754 4-Wheel Steer Tractor
POWER SYSTEM:
24 HP *(17.9 kw)
Final Tier IV Emission Compliant Yanmar 3-Cylinder Liquid Cooled Diesel
Overhead Valves
Full Pressure Lubrication System with Replaceable Oil Filter
Rubber Mounted Isolated Engine
Dry Type Two Element Heavy Duty Air Filter with Air Restriction Indicator
6.5 Gallon (24.6 L) Fuel Tank Capacity
INTEGRATED TRANSAXLE:
2 Pedal Foot Controlled Hydrostatic Transmission
Internal Wet Disk Brakes
Internal Hydraulic PTO Clutch with Modulated PTO Engagement
Traction Assist
2-Wheel Drive
STEERING:
Hydraulic Power Steering
6 Position Tilt Steering Wheel
OPERATOR STATION:
Illuminated Dash with Gauges and Lights
Hourmeter
Coolant Temperature
Fuel Level
Oil Pressure Light
Battery Charge Light
Park Brake Light
Restricted Air Filter Light
Glow Plug Wait Light
21-In. Professional High Back Seat with 4-Bar suspension
7 In. Slide Rail Seat Adjustment
14 Position Adjustable Seat
Cruise Control
Reverse Implement Option (RIO)
ELECTRICAL:
12V Electric Start
40 Amp Regulated Alternator
500 CCA Battery
Halogen Headlights, Tail Lights
Rear Work and Backup Lights
Seat, PTO and Brake Interlock Switch
IMPLEMENT LIFT:
"From the Seat" Mower Cut Height Adjustment
Hydraulic with 2 Spool Control Valve
4 Hydraulic Outlet Couplers
FRAME AND FRONT AXLE:
Robotic MIG Welded Frame
Frame Sides .18 In. (4.6 mm) Thick
Built-In Front Bumper Accepts Four "Quik-Tatch" Weight
Nodular Cast Iron Front Axle
1 In. (25 mm) Front Spindles
Built-In Front Receiver Hitch
18x7.00-8 4 PR Front Turf Tires
26x10.50-12 2 PR Rear Turf Tires
*Engine HP is Provided by the Engine Manufacturer to be Used for Comparison Purposes Only, Actual Operating HP will be Less.

CODE	ATTACHMENT IDENTIFIER	DESCRIPTION	SUGGESTED LIST PRICE USD ($)

Select One Code From Each Required Category

Signature Series X754 4-Wheel Steer Tractor Less Deck

F.O.B. Janesville, Wisconsin

5861M		Signature Series X754 4-Wheel Steer Tractor Less Deck	11,499.00

DESTINATION

001A		United States and Canada	In Base Price
001C		Australia and New Zealand	Same Price
001D		Other	Same Price
0195		Mexico	Same Price

ATTACHMENTS FOR FIELD CONVERSION

		Carts / Hitches:	
	BM23989	Drawbar, 1.25 In. (38mm)	35.31
		Engine:	
	AM134805	Engine Block Heater Adapter	See Parts
	MIA881629	Engine Block Heater Adapter	See Parts

Signature Series X754 4-Wheel Steer Tractor Less Deck
Continued

CODE	ATTACHMENT IDENTIFIER	DESCRIPTION	SUGGESTED LIST PRICE USD ($)
		ATTACHMENTS FOR FIELD CONVERSION Continued...	
	AR87167	Engine Coolant Heater (110 Volt) *Requires MIA881626 Engine Block Heater Adapter, (2) 19M7868 Bolts and (1) M87940 Spacer (Serial # 060001-).* *Requires AM134805 Engine Block Heater Adapter (Serial # -060000).*	See Parts
	AM108146	Spark Arrester Screen for Muffler	See Parts
		Front Hitch:	
	BM19782	Front Quick-Hitch and Hydraulic Lift (X400/X500 HDGT's, X700's)	692.29
		Front PTO:	
	BM24361	2000 RPM Mid-to-Front PTO Kit, 2WD (X400 HDGT's, X700's) *For Homologation Tractors, also Order BM20966 Front PTO Shield. Required to Meet Homologation Standards. Not Required for CE.*	298.53
		Hitch:	
	BM17327	3-Point Hitch (Category 0)	634.51
	BM23882	3-Pt. Hitch, Category 1 (X400/X500 HDGT's, X700's)	634.51
	BM23883	Adaptor Kit, X400/X500 HDGT 3-Point Hitch on X700's *Converts a BM21263 (X400/X500 Cat 1) or BM17327 (Cat 0) for use on X700s.*	78.11
	BM20877	Rear Receiver Hitch Kit	43.87
	LVU12858	iMatch Quick Hitch Bushings	See Parts
	LVB25976	iMatch Quick Hitch Category 1 with adjustable top hook	350.90
		Hydraulics:	
	BM20837	Hydraulic Angling (X400/X500 HDGT's, X700's)	212.93
	BM20761	Hydraulic Coupler Kit *Required on X700, X710, X465, X475 and 425 Tractors.*	54.57
	AM134625	Hydraulic Cylinder Lockout Valve	See Parts
	BM20896	Hydraulic Retro Kit	28.89
		Miscellaneous:	
	BM23588	540 RPM Rear PTO Drive (X700's Starting June 2010 production and beyond-) *For use on X700 Series Tractors produced after mid-June 2010 when new-pitch gears entered production. See sales manual for tractor serial number break and/or verify that the transmission serial number starts with K00.*	960.86
	BM21914	540 RPM Rear PTO Drive (X400/X500 HDGTs, X700's -June 2010 production) *For use on X400/X500 HDGTs and X700 Series Tractors produced through mid-June 2010. See Sales Manual for tractor serial number break and/or verify that the transmission serial number starts with K02 or K03.* *When used on MY2005 and older X400 and X500 HDGTs, also order AM120840 Module.*	960.86
	BM20990	Alternator Kit, 40 Amp (X740, X744, X748, X750, X754, X758, X495, X595) *Replaces Standard 20 Amp Alternator Recmmended with Heated Cab. Standard Equipment on MY2007 (Serial 020001-).*	499.69
	BM24426	Arm Rest kit	189.39

Signature Series X754 4-Wheel Steer Tractor Less Deck
Continued

CODE	ATTACHMENT IDENTIFIER	DESCRIPTION	SUGGESTED LIST PRICE USD ($)
		ATTACHMENTS FOR FIELD CONVERSION Continued...	
	BM21332	Attaching Parts for Deluxe High-Back Seat	146.59
	AM36786	Battery Charger (110 Volt)	See Parts
	BM20714	Click-N-Go Bracket (X400/X500 HDGT's, X700's)	112.36
	BM21490	Deluxe High-Back Seat *Requires BM21332, Attaching Parts when Installing on a Non-Special Edition Tractor.*	554.26
	BM20880	Front Brush Guard Kit (X700, X720, X724, X728, X729, X740, X744, X748, X749)	249.31
	BM24375	Front Brush Guard Kit (X710, X730, X734, X738, X739, X750, X744, X788)	249.31
	BM20753	Front Light Kit	207.59
	TY25326	Tire Chains for 26x10.50-12 Turf Drive Tires *For all Wheel Steer Tractors.*	See Parts
	M150364	Wheel Cover, 12 In. (Chrome)	See Parts
	M114663	Wheel Cover, 12 In. (Yellow Plastic)	See Parts
	M150362	Wheel Cover, 8 In. (Chrome)	See Parts
		Order Zone:	
	LP3301	125 lb. Select Series Mounted Electric Broadcast Spreader	In Catalog
	LP54000	54 In. Tractor Shovel *Requires 54 In. Front Blade. Go to Order Zone for Specific Requirements.*	In Catalog
	LPJD400	Bucket (5 gallon)	In Catalog
	LPJD301	Bucket Holder (Double)	In Catalog
		Weights:	
	BM17972	50 Lb. Cast Iron Wheel Weight (1)	128.40
	BM24363	9-Weight Front Weight Bracket *For X400/X500 HDGT's, X700's*	188.31
	BW14313	Ballast Box (Category 1, 3-Pt. Hitch)	315.66
	BM20715	Ballast Box (Click-N-Go) (X400/X500 HDGT's, X700's) *Requires BM20714 Click-N-Go Bracket.*	283.56
	BM17977	Mounting Hardware (1) for Attaching Two 50 lb. Weights to 23 In., 24 In. or 26 In. Tires	20.33
	BM18094	Mounting Hardware (1), for Attaching 1 Wheel Weight. 4-Wheel Steer Only.	21.40
	R66949	Quik-Tatch Weight, 42 Lb.	62.06
	BM20779	Rear Click-N-Go Weight Bracket (X400/X500 HDGT's, X700's) *Requires BM20714 Click-N-Go Bracket.*	156.21

Signature Series X754 4-Wheel Steer Tractor Less Deck
Continued

CODE	ATTACHMENT IDENTIFIER	DESCRIPTION	SUGGESTED LIST PRICE USD ($)
		ATTACHMENTS FOR FIELD CONVERSION Continued...	
	BM17964	Wheel Weight (Cast Iron, Front, 30 Lb. 8 In.) *For Use on Steered Wheel.*	101.66
	BM17978	Wheel Weight Mounting Hardware (1) for Attaching Front Wheel Weight	10.70
		Wheels and Tires Rear:	
	BM20955	26x10.50-12 In. 2 PR Turf Tires (Rear) (4-Wheel Steer Only)	486.86
		SERVICE CONTRACTS - RESIDENTIAL OWNERS/USE	
		Visit http://www.JohnDeere.com/ServicePlans for more information on John Deere Service Contracts. May not be Available in Parts of the U.S., Not Available in Canada. Price may vary due to driving distance and/or time from machine to dealership location.	
		John Deere Extended Service Plan - 5-Year Option *5-year extended service plan. (1- year of extended service protection); 5-years of warranty transportation.*	599.99
		John Deere Extended Service Plan - 6-Year Option *6-year extended service plan. (2- years of extended service protection); 6-years of warranty transportation.*	729.99

Signature Series X758 Full Time 4-Wheel Drive Tractor Less Deck

Equipment for Base Machine

Signature Series X758 4 Wheel Drive Tractor with HDAP Tires
POWER SYSTEM:
24 HP *(17.9 kw)
Interim Tier IV Emission Compliant
3-Cylinder Liquid Cooled Diesel
Overhead Valves
Full Pressure Lubrication System with Replaceable Oil Filter
Rubber Mounted Isolated Engine
Dry Type Two Element Heavy Duty Air Filter with Air Restriction Indicator
6.5 Gallon (24.6 L) Fuel Tank Capacity
INTEGRATED TRANSAXLE:
2 Pedal Foot Controlled Hydrostatic Transmission
Internal Wet Disk Brakes
Internal Hydraulic PTO Clutch with Modulated PTO Engagement
Traction Assist
Full Time 4-wheel drive
STEERING:
Hydraulic Power Steering
6 Position Tilt Steering Wheel
OPERATOR STATION:
Illuminated Dash with Gauges and Lights
Hourmeter
Coolant Temperature
Fuel Level
Oil Pressure Light
Battery Charge Light
Park Brake Light
Restricted Air Filter Light
Glow Plug Wait Light
21-In. Professional High Back Seat with 4-Bar suspension
7 In. Slide Rail Seat Adjustment
14 Position Adjustable Seat
Cruise Control
Reverse Implement Option (RIO)
ELECTRICAL:
12V Electric Start
40 Amp Regulated Alternator
500 CCA Battery
Halogen Headlights, Tail Lights
Rear Work and Backup Lights
Seat, PTO and Brak
Interlock Switch
IMPLEMENT LIFT:
"From the Seat" Mower Cut Height Adjustment
Hydraulic with 2 Spool Control Valve
4 Hydraulic Outlet Couplers
FRAME AND FRONT AXLE:
Robotic MIG Welded Frame
Frame Sides .18 In. (4.6 mm) Thick
Built-In Front Bumper Accepts Four "Quik-Tatch" Weights
Nodular Cast Iron Front Axle
1 In. (25 mm) Front Spindles
Built-In Front Receiver Hitch
18x8.50-10 4 PR Front HDAP Tires
26x12.00-12 2 PR Rear HDAP Tires
*Engine HP is Provided by the Engine Manufacturer to be Used for Comparison Purposes Only, Actual Operating HP will be Less.

CODE	ATTACHMENT IDENTIFIER	DESCRIPTION	SUGGESTED LIST PRICE USD ($)

Select One Code From Each Required Category

Signature Series X758 Full Time 4-Wheel Drive Tractor Less Deck

F.O.B. Janesville, Wisconsin

5871M		Signature Series X758 Full Time 4-Wheel Drive Tractor Less Deck	12,099.00

DESTINATION

001A		United States and Canada	In Base Price
001C		Australia and New Zealand	Same Price
001D		Other	Same Price
0195		Mexico	Same Price

ATTACHMENTS FOR FIELD CONVERSION

		Carts / Hitches:	
	BM23989	Drawbar, 1.25 In. (38mm)	35.31
		Engine:	
	AM134805	Engine Block Heater Adapter	See Parts
	MIA881629	Engine Block Heater Adapter	See Parts

Signature Series X758 Full Time 4-Wheel Drive Tractor Less Deck
Continued

CODE	ATTACHMENT IDENTIFIER	DESCRIPTION	SUGGESTED LIST PRICE USD ($)
		ATTACHMENTS FOR FIELD CONVERSION Continued...	
	AR87167	Engine Coolant Heater (110 Volt) *Requires MIA881626 Engine Block Heater Adapter, (2) 19M7868 Bolts and (1) M87940 Spacer (Serial # 060001-).* *Requires AM134805 Engine Block Heater Adapter (Serial # -060000).*	See Parts
	AM108146	Spark Arrester Screen for Muffler	See Parts
		Fenders:	
	BM24430	Front Fender Kit (X738, X739, X758)	151.94
		Front Hitch:	
	BM19782	Front Quick-Hitch and Hydraulic Lift (X400/X500 HDGT's, X700's)	692.29
		Front PTO:	
	BM24362	4WD 2000 RPM Front PTO (X500 HDGT's, X700's) *For European RII Homologation Tractors, also Order BM20978 Front PTO Shield. Required to Meet Homologation Standards. Not Required for CE.*	298.53
		Hitch:	
	BM17327	3-Point Hitch (Category 0)	634.51
	BM23882	3-Pt. Hitch, Category 1 (X400/X500 HDGT's, X700's)	634.51
	BM23883	Adaptor Kit, X400/X500 HDGT 3-Point Hitch on X700's *Converts a BM21263 (X400/X500 Cat 1) or BM17327 (Cat 0) for use on X700s.*	78.11
	BM20877	Rear Receiver Hitch Kit	43.87
	LVU12858	iMatch Quick Hitch Bushings	See Parts
	LVB25976	iMatch Quick Hitch Category 1 with adjustable top hook	350.90
		Hydraulics:	
	BM20837	Hydraulic Angling (X400/X500 HDGT's, X700's)	212.93
	BM20761	Hydraulic Coupler Kit *Required on X700, X710, X465, X475 and 425 Tractors.*	54.57
	AM134625	Hydraulic Cylinder Lockout Valve	See Parts
	BM20896	Hydraulic Retro Kit	28.89
		Miscellaneous:	
	BM23588	540 RPM Rear PTO Drive (X700's Starting June 2010 production and beyond-) *For use on X700 Series Tractors produced after mid-June 2010 when new-pitch gears entered production. See sales manual for tractor serial number break and/or verify that the transmission serial number starts with K00.*	960.86
	BM21914	540 RPM Rear PTO Drive (X400/X500 HDGTs, X700's -June 2010 production) *For use on X400/X500 HDGTs and X700 Series Tractors produced through mid-June 2010. See Sales Manual for tractor serial number break and/or verify that the transmission serial number starts with K02 or K03.* *When used on MY2005 and older X400 and X500 HDGTs, also order AM120840 Module.*	960.86
	BM20990	Alternator Kit, 40 Amp (X740, X744, X748, X750, X754, X758, X495, X595) *Replaces Standard 20 Amp Alternator Recmmended with Heated Cab. Standard Equipment on MY2007 (Serial 020001-).*	499.69

Signature Series X758 Full Time 4-Wheel Drive Tractor Less Deck
Continued

CODE	ATTACHMENT IDENTIFIER	DESCRIPTION	SUGGESTED LIST PRICE USD ($)
		ATTACHMENTS FOR FIELD CONVERSION Continued...	
	BM24426	Arm Rest kit	189.39
	BM21332	Attaching Parts for Deluxe High-Back Seat	146.59
	AM36786	Battery Charger (110 Volt)	See Parts
	BM20714	Click-N-Go Bracket (X400/X500 HDGT's, X700's)	112.36
	BM21490	Deluxe High-Back Seat *Requires BM21332, Attaching Parts when Installing on a Non-Special Edition Tractor.*	554.26
	BM20880	Front Brush Guard Kit (X700, X720, X724, X728, X729, X740, X744, X748, X749)	249.31
	BM24375	Front Brush Guard Kit (X710, X730, X734, X738, X739, X750, X744, X788)	249.31
	BM20753	Front Light Kit	207.59
	M150363	Wheel Cover, 10 In. (Chrome)	See Parts
	M150364	Wheel Cover, 12 In. (Chrome)	See Parts
	M114663	Wheel Cover, 12 In. (Yellow Plastic)	See Parts
		Order Zone:	
	LP3301	125 lb. Select Series Mounted Electric Broadcast Spreader	In Catalog
	LP54000	54 In. Tractor Shovel *Requires 54 In. Front Blade. Go to Order Zone for Specific Requirements.*	In Catalog
	LPJD400	Bucket (5 gallon)	In Catalog
	LPJD301	Bucket Holder (Double)	In Catalog
		Seats / Wheels / Tires:	
	TY15958	Tire Chains (Pair) for 26x12-12 Tires	See Parts
		Weights:	
	BM17972	50 Lb. Cast Iron Wheel Weight (1)	128.40
	BM17976	50 Lb. Wheel Weight, Rear Plastic (1) with Mounting Hardware	66.34
	BM17973	72 Lb. Cast Iron Starter Wheel Weight (1)	181.90
	BM24363	9-Weight Front Weight Bracket *For X400/X500 HDGT's, X700's*	188.31
	BW14313	Ballast Box (Category 1, 3-Pt. Hitch)	315.66
	BM20715	Ballast Box (Click-N-Go) (X400/X500 HDGT's, X700's) *Requires BM20714 Click-N-Go Bracket.*	283.56
	BM18101	Mounting Hardware (1) for Attaching 72 Lb. Starter Weight and (2) 50 Lb. Cast Iron Weights on 26 In. Tire	28.89
	BM18089	Mounting Hardware (1) for Attaching 72 Lb. Starter Weight on 26x12-12 Tire	21.40

Signature Series X758 Full Time 4-Wheel Drive Tractor Less Deck
Continued

CODE	ATTACHMENT IDENTIFIER	DESCRIPTION	SUGGESTED LIST PRICE USD ($)
		ATTACHMENTS FOR FIELD CONVERSION Continued...	
	BM17977	Mounting Hardware (1) for Attaching Two 50 lb. Weights to 23 In., 24 In. or 26 In. Tires	20.33
	R66949	Quik-Tatch Weight, 42 Lb.	62.06
	BM20779	Rear Click-N-Go Weight Bracket (X400/X500 HDGT's, X700's) *Requires BM20714 Click-N-Go Bracket.*	156.21
		Wheels and Tires Front:	
	BM20954	18x8.50-10 In. 4 PR Turf (R3) Front Tires *For X728, X729, X748, X749 and X500 HDGT's.*	286.76
	BM20952	18x8.50-10 In. 4PR HDAP Tires	334.91
		Wheels and Tires Rear:	
	BM18369	26X12.00-12 In. 4PR Bar Tires (Rear) *Use with Two Wheel Steer Only.*	640.93
	BM22425	26x12.0-12 In. 2PR HDAP Tires (Rear) *Accommodates SKU22260 60-in 7-Iron Mower Deck. Use with Two Wheel Steer Only. Available Feb 2007.*	622.74
	BM18370	26x12.00-12 In. 2 PR Turf Tires (Rear)	486.86
		SERVICE CONTRACTS - RESIDENTIAL OWNERS/USE	
		Visit http://www.JohnDeere.com/ServicePlans for more information on John Deere Service Contracts. May not be Available in Parts of the U.S., Not Available in Canada. Price may vary due to driving distance and/or time from machine to dealership location.	
		John Deere Extended Service Plan - 5-Year Option *5-year extended service plan. (1- year of extended service protection); 5-years of warranty transportation.*	599.99
		John Deere Extended Service Plan - 6-Year Option *6-year extended service plan. (2- years of extended service protection); 6-years of warranty transportation.*	729.99

48 In. Shaft Driven Convertible Mower Deck (48C/48X)

Equipment for Base Machine

48 In. Shaft Driven convertible Mower Deck (48C/48X)
48 In. cutting width
Side discharge
Mulching capable
Material collection capable
Heavy duty 4 point mounting system
(4) Heavy duty rotateable gage wheels
40mm blade overlap
Formed heavy duty 10 Gauge steel
Formed edge around deck shell
Front anti-scalp roller
Shaft drive
Wash port
Greaseable deck spindles

CODE	ATTACHMENT IDENTIFIER	DESCRIPTION	SUGGESTED LIST PRICE USD ($)

Select One Code From Each Required Category

BASE MACHINE

F.O.B. Janesville, Wisconsin

9070M		48 In. Shaft Driven Convertible Mower Deck (48C/48X) *When mounting on Signature Series Tractors (X710, 730, X734, X738, X739, X750, X754, X758), also order BM24370 Draft Arms and Upstop Kit.*	1,300.00

DESTINATION

0202		United States and Canada	In Base Price
0230		Australia and New Zealand	Same Price
0195		Mexico	Same Price
0250		All Other Countries	Same Price

ATTACHMENTS FOR FIELD CONVERSION

Mower Deck and Mower Deck Attachments:

	BM24370	48C Draft arm kit, X700 Signature Series	63.13
	AM130907	Mower Deck Leveling Gauge	See Parts

54HC Mower Deck X700 for Signature Series (Model Year 2013 and Later)

Equipment for Base Machine

54 HC Shaft Driven Mower Deck
54 In. Cutting Width
Side discharge
Drive over connect, w/optional auto connect drive shaft
(4) Front and rear adjustable and quick release gauge wheels
Memory Setting
Shaft drive
Anti-Scalp Front Roller
40mm blade overlap
Greasable Spindles
Front Lip Reinforcement
Formed heavy duty 8 Gauge steel
Mower Wash Port

CODE	ATTACHMENT IDENTIFIER	DESCRIPTION	SUGGESTED LIST PRICE USD ($)
		Select One Code From Each Required Category	
		BASE MACHINE	
		F.O.B. Janesville, Wisconsin	
9074M		54HC Mower Deck X700 for Signature Series (Model Year 2013 and Later)	1,700.00
		DESTINATION	
001A		United States and Canada	In Base Price
001C		Australia and New Zealand	Same Price
0195		Mexico	Same Price
001D		All Other Countries	Same Price
		PTO CONNECTION	
3425		Standard Connect	In Base Price
3426		Auto Connect	247.00
3490		Less Drive Shaft	-182.00
		ATTACHMENTS FOR FIELD CONVERSION	
		Mower Deck and Mower Deck Attachments:	
	BM23977	54HC Mulch Kit	227.91
	BM23894	Auto-connect kit, X700 Signature Series	492.20
	BM23903	Standard drive shaft with hanger, X700 Signature Series	208.66

60HC Mower Deck X700 for Signature Series (Model Year 2013 and Later)

Equipment for Base Machine

60HC Shaft Driven Mower Deck
60 In cutting width
Formed heavy duty 9 Gauge steel deck
(4) Front and Rear Adjustable and Quick Release Gauge Wheels with Memory Settings
Drive over connect, w/optional auto connect driveshaft
Shaft drive
40mm blade overlap
Greasable Spindles
Front lip Reinforcement
Mower Wash Port

CODE	ATTACHMENT IDENTIFIER	DESCRIPTION	SUGGESTED LIST PRICE USD ($)
		Select One Code From Each Required Category	
		BASE MACHINE	
		F.O.B. Janesville, Wisconsin	
9075M		60HC Mower Deck X700 for Signature Series (Model Year 2013 and Later)	2,100.00
		DESTINATION	
001A		United States and Canada	In Base Price
001C		Australia and New Zealand	Same Price
0195		Mexico	Same Price
001D		All Other Countries	Same Price
		PTO CONNECTION	
3425		Standard Connect	In Base Price
3426		Auto Connect	247.00
3490		Less Drive Shaft	-182.00
		ATTACHMENTS FOR FIELD CONVERSION	
		Mower Deck and Mower Deck Attachments:	
	BM23978	60HC Mulch Kit	238.61
	BM23894	Auto-connect kit, X700 Signature Series	492.20
	BM23648	Roller Striping Kit (X400/X500 HDGT, X700s)	278.20
	BM23903	Standard drive shaft with hanger, X700 Signature Series	208.66

Current Attachments for Non-Current G110 Garden Tractors

CODE	ATTACHMENT IDENTIFIER	DESCRIPTION	SUGGESTED LIST PRICE USD ($)
		ATTACHMENTS FOR FIELD CONVERSION	
		Miscellaneous:	
	BG20020	46 In. Snow Blade *Requires Rear Ballast and Tire Chains.*	323.14
	BG20260	Sun Canopy *Fits all 100 Series Tractors.*	99.00
		Mower Deck and Mower Deck Attachments:	
	BG20304	54 In. Mulch Kit *Fits G110, 190C.*	222.56
		Weights:	
	R66949	Quik-Tatch Weight, 42 Lb. *Two Required.*	62.06
	BG20029	Quik-Tatch Weight, 42 Lb. (Boxed) *Two Required.*	63.13

Current Attachments for Non-Current GT Garden Tractors (GT235 and GT245)

CODE	ATTACHMENT IDENTIFIER	DESCRIPTION	SUGGESTED LIST PRICE USD ($)
		ATTACHMENTS FOR FIELD CONVERSION	
		Miscellaneous:	
	BM17981	12 Volt Work Light Kit	51.36
	BM21289	Halogen Headlight Kit	57.79
		Mower Deck and Mower Deck Attachments:	
	SKU21354	48 In. Convertible Mower (48C)	1,080.00
	SKU21394	54 In. Convertible Mower (54C)	1,320.00
	BM19894	Leaf Bagging Kit (48C/48X Mower) *Contains Three Bolt-on Deck Lips for Improved Bagging of Leaves.*	99.51
		Weights:	
	BM17972	50 Lb. Cast Iron Wheel Weight (1)	128.40
	BM17976	50 Lb. Wheel Weight, Rear Plastic (1) with Mounting Hardware	66.34
	BM19511	Front Weight Bracket/Bumper *For GT225, GT235, GT235E, GT245 and GX255 Tractors.* *French Canada Dealers must order M139913, Warning Decal.*	134.81
	BM17985	Mounting Hardware (1) for Attaching One Wheel Weight	11.77
	BM17977	Mounting Hardware (1) for Attaching Two 50 lb. Weights to 23 In., 24 In. or 26 In. Tires	20.33
	R66949	Quik-Tatch Weight, 42 Lb.	62.06
	BM17964	Wheel Weight (Cast Iron, Front, 30 Lb. 8 In.)	101.66
	BM17978	Wheel Weight Mounting Hardware (1) for Attaching Front Wheel Weight	10.70
		Wheels and Tires Rear:	
	BM18434	23x10.50-12 In. 4 PR Bar Tires (Rear Pair)	339.19
	BM21516	24X12.00-12 In. Turf Tires 2PR (Rear) *Not for Use on 2003 and Prior Model Year Tractors*	339.19

Current Attachments for Non-Current GX255 Garden Tractors

CODE	ATTACHMENT IDENTIFIER	DESCRIPTION	SUGGESTED LIST PRICE USD ($)
		ATTACHMENTS FOR FIELD CONVERSION	
		Miscellaneous:	
	BM17981	12 Volt Work Light Kit	51.36
	BM21289	Halogen Headlight Kit	57.79
		Mower Deck and Mower Deck Attachments:	
	SKU21354	48 In. Convertible Mower (48C)	1,080.00
	SKU21394	54 In. Convertible Mower (54C)	1,320.00
	BM19894	Leaf Bagging Kit (48C/48X Mower) *Contains Three Bolt-on Deck Lips for Improved Bagging of Leaves.*	99.51
		Weights:	
	BM17972	50 Lb. Cast Iron Wheel Weight (1)	128.40
	BM17976	50 Lb. Wheel Weight, Rear Plastic (1) with Mounting Hardware	66.34
	BM19511	Front Weight Bracket/Bumper *For GT225, GT235, GT235E, GT245 and GX255 Tractors.* *French Canada Dealers must order M139913, Warning Decal.*	134.81
	BM17985	Mounting Hardware (1) for Attaching One Wheel Weight *Attaches (1) 50 lb. Weight to GTs, GXs, X500 M-Ts and F1400s.*	11.77
	BM17977	Mounting Hardware (1) for Attaching Two 50 lb. Weights to 23 In., 24 In. or 26 In. Tires	20.33
	R66949	Quik-Tatch Weight, 42 Lb.	62.06
	BM17964	Wheel Weight (Cast Iron, Front, 30 Lb. 8 In.) *For Use on Steered Wheel.*	101.66
	BM17978	Wheel Weight Mounting Hardware (1) for Attaching Front Wheel Weight	10.70
		Wheels and Tires Rear:	
	BM18434	23x10.50-12 In. 4 PR Bar Tires (Rear Pair)	339.19
	BM21516	24X12.00-12 In. Turf Tires 2PR (Rear) *Not for Use on 2003 and Prior Model Year Tractors*	339.19

Current Attachments for Non-Current GX Garden Tractors (GX335, GX345 and GX355)

CODE	ATTACHMENT IDENTIFIER	DESCRIPTION	SUGGESTED LIST PRICE USD ($)
		ATTACHMENTS FOR FIELD CONVERSION	
		Miscellaneous:	
	BM17981	12 Volt Work Light Kit	51.36
	BM21289	Halogen Headlight Kit	57.79
		Mower Deck and Mower Deck Attachments: *The appropriate front draft arm assembly will be included with tractors shipped "Less Mower", but NOT with the following mowers. Order as PARTS if needed.* *(GX355): The 48C and 54C In. Mower shipped with GX355's have heavier duty parts. If swapping a mower from a gas tractor or using a cartoned mower on a GX355, order the following from Parts: M143019 Primary Belt and AM130728 Belt Tension Assembly.*	
	SKU21354	48 In. Convertible Mower (48C)	1,080.00
	SKU21394	54 In. Convertible Mower (54C)	1,320.00
		Weights:	
	BM17972	50 Lb. Cast Iron Wheel Weight (1)	128.40
	BM17976	50 Lb. Wheel Weight, Rear Plastic (1) with Mounting Hardware	66.34
	BM17985	Mounting Hardware (1) for Attaching One Wheel Weight *Attaches (1) 50 lb. Weight to GTs, GXs, X500 M-Ts and F1400s.*	11.77
	BM17977	Mounting Hardware (1) for Attaching Two 50 lb. Weights to 23 In., 24 In. or 26 In. Tires	20.33
	R66949	Quik-Tatch Weight, 42 Lb. *Two Required.*	62.06
	BM17964	Wheel Weight (Cast Iron, Front, 30 Lb. 8 In.)	101.66
	BM17978	Wheel Weight Mounting Hardware (1) for Attaching Front Wheel Weight	10.70
		Wheels and Tires Rear:	
	BM18434	23x10.50-12 In. 4 PR Bar Tires (Rear Pair)	339.19
	BM21516	24X12.00-12 In. Turf Tires 2PR (Rear) *Not for Use on 2003 and Prior Model Year Tractors*	339.19

44 In. Front Blade
(For LT and LTR)

Equipment for Base Machine

44 In. Wide, Heavy Gauge, Curved Blade

Reinforcing Angle on Back of Blade

Two Adjustable Skid Shoes
Three-Angle Positioning
Replaceable Cutting Edge

CODE	ATTACHMENT IDENTIFIER	DESCRIPTION	SUGGESTED LIST PRICE USD ($)
		Select One Code From Each Required Category	
		BASE MACHINE	
		F.O.B. Davenport, Iowa	
9480M		44 In. Front Blade (For LT and LTR) *Rear Weights and Tire Chains are Recommended for Additional Traction.*	519.00
		ATTACHMENTS FOR FIELD CONVERSION	
		Miscellaneous:	
	BM20796	Lift Assist Kit *Available for LT150, LT160, and LT170 to Reduce Effort to Raise Front Blade by 40%. Order BM20796 Lift Assist Kit for LT180 if Tractor was Ordered "Less Mower" and is not already Equipped with the Internal Lift Assist Spring (M134323).*	49.21
	BM21360	Retro-Fit Kit *Required for Hand-Lift Tractors*	83.46
	AM132109	Rubber Blade Squeegee Kit	See Parts
	TY24327	Tire Chains for 22x11-10 In. Turf Tires	See Parts
		Seats / Wheels / Tires:	
	BM19123	31 Lb. Plastic Rear Wheel Weights	65.27
	TY16200	Tire Chains (Pair) for 20x10-8, 20x10-10	See Parts
		Weights:	
	R66949	Quik-Tatch Weight, 42 Lb. *Not for LTR166 or LTR180*	62.06
	BM21432	Rear Weight Bracket Kit *Requires Two R66949 Quik-Tatch Weights* *Not for LTR166 or LTR180*	107.00

44 In. Front Blade
(For LX, GT and GX255)

Equipment for Base Machine

44 In. Wide, Heavy Gauge, Curved Blade
Two Adjustable Skid Shoes
Reinforcing Angle on Back of Blade
Three-Angle Positioning
Height Controlled by Manual Foot Lift on Tractor
Replaceable Cutting Edge

CODE	ATTACHMENT IDENTIFIER	DESCRIPTION	SUGGESTED LIST PRICE USD ($)
		Select One Code From Each Required Category	
		BASE MACHINE	
		F.O.B. Davenport, Iowa	
9561M		44 In. Front Blade (For LX, GT and GX255) *Rear Weights and Tire Chains are Recommended for Additional Traction. Hand Lift Tractors Require BM21360 Retro-Fit Kit.*	549.00
		ATTACHMENTS FOR FIELD CONVERSION	
		Miscellaneous:	
	BM19797	Adapter Kit for LX277 AWS and LX280 AWS	31.03
	BM21360	Retro-Fit Kit *Required for Hand-Lift Tractors*	83.46
	AM132109	Rubber Blade Squeegee Kit	See Parts
	TY15956	Tire Chains (Pair) for 23x10.50-12 In. Drive Tires	See Parts
	TY24327	Tire Chains for 22x11-10 In. Turf Tires	See Parts
		Seats / Wheels / Tires:	
	TY16200	Tire Chains (Pair) for 20x10-8, 20x10-10	See Parts
	TY24328	Tire Chains (Pair) for 24x12.00-12 In. Drive Tires *For Turf and Knobby Tires. Not Intended for use on all Four Rear Tires.*	See Parts
		Weights:	
	R66949	Quik-Tatch Weight, 42 Lb.	62.06
	BM17296	Rear Weight Mounting Kit (LX Series) *For LX280 AWS*	81.31

48 In. Front Blade
(For 240-285, 320, 325, 335, 345, 355D, GT and GX Tractors)
Equipment for Base Machine

48 In. Wide, Heavy Gauge, Curved Blade
Two Adjustable Skid Shoes
Replaceable Cutting Edge
Reinforcing Angle on Back of Blade

Easy-On, Easy-Off Mounting
Five-Angle Positioning
Spring Breakaway with Lock

CODE	ATTACHMENT IDENTIFIER	DESCRIPTION	SUGGESTED LIST PRICE USD ($)
		Select One Code From Each Required Category	
		BASE MACHINE	
		F.O.B. Davenport, Iowa	
3481M		48 In. Front Blade (For 240-285, 320, 325, 335, 345, 355D, GT and GX Tractors) *Operator's Manual is Packaged with Attaching Parts Bundle.* *One 50 Lb. Plastic Wheel Weight on each Rear Wheel or up to Four 42 Lb. Quik-Tatch Weights Recommended for Additional Traction. Tire Chains helpful when Blading Snow.*	652.00
		LIFT KIT	
1000		Front Implement Lift Kit (GT with Hand Lift) *GT242, GT262, GT275 require two M132142 Brackets, two 19M7789 Bolts and two 14M7466 Nuts.*	90.00
1001		Front Implement Lift Kit (325, 335, 345, 355D)	73.00
1002		Front Implement Lift Kit (240-285,320) *When Installing Front Implement Lift Kit on the 240 with 38 In. Mower 1-M71193 Right and 1-M71194 Left Mower Lift Stops, 4-03M7190 Carriage Bolts and 4-14M7296 Flange Head Nuts may be Required.*	100.00
1003		Front Implement Lift Kit (GX325, GX335, GX345, GX355)	73.00
1004		Front Implement Lift Kit (GT and GX255 with Foot Lift)	106.00
1010		Less Front Implement Lift Kit	In Base Price
		ATTACHING PARTS	
2001		Attaching Parts (240-285, 320, 325, 335, 345, 355D, GX325, GX335, GX345,GX355) *240-285, 320 Tractors Require 24M7053 Washers.*	32.00
2002		Attaching Parts (GT and GX255)	43.00
2010		Less Attaching Parts	In Base Price

ATTACHMENTS FOR FIELD CONVERSION

Miscellaneous:

48 In. Front Blade
(For 240-285, 320, 325, 335, 345, 355D, GT and GX Tractors)
Continued

CODE	ATTACHMENT IDENTIFIER	DESCRIPTION	SUGGESTED LIST PRICE USD ($)
		ATTACHMENTS FOR FIELD CONVERSION Continued...	
	BM19218	Attaching Parts (240-285, 320, 325, 335, 345, 355D, GX325, GX335, GX345, GX355) *240-285, 320 Tractors Require six 24M7053 Washers.*	39.59
	BM21340	Attaching Parts (GT and GX255)	50.29
	BM16733	Front Implement Lift Kit (240-285,320) *When Installing Front Implement Lift Kit on the 240 with 38 In. Mower 1-M71193 Right and 1-M71194 Left Mower Lift Stops, 4-03M7190 Carriage Bolts and 4-14M7296 Flange Head Nuts may be Required.*	119.84
	BM19996	Front Implement Lift Kit (325, 335, 345, 355D)	86.67
	BM20781	Front Implement Lift Kit (GX325, GX335, GX345, GX355)	86.67
	BM21337	Front Implement Lift Kit (LX, GT, GX255 with Foot Lift) *(LX, GT and GX255 with Foot Lift)* *LX280 AWS Requires (2) M136814 Brackets, (4) 19M7285 Bolts and four 14M7466 Nuts (1) M155668 Bracket, (1) 19M7786 M10x30 Bolt, and (1) 14M7400 M10 Locknut.*	124.11
	BM18977	Front Implement Lift Kit (LX/GT with Hand Lift) *GT242, GT262, GT275 require two M132142 Brackets, two 19M7789 Bolts and two 14M7401 Nuts.*	107.00
	AM119321	Heavy Duty Skid Shoe (1)	See Parts
	BM21341	Manual Angling Kit (GT, 240-285, 320, 325, 335, 345, 355D, GX) *For 240-285, 320 Tractors, Order one AM103783 Bracket, one 19M7866 Bolt and one 14M7401 Nut.*	207.59
	TY15956	Tire Chains (Pair) for 23x10.50-12 In. Drive Tires	See Parts
		Seats / Wheels / Tires:	
	TY24328	Tire Chains (Pair) for 24x12.00-12 In. Drive Tires *For Turf and Knobby Tires. Not Intended for use on all Four Rear Tires.*	See Parts
		Weights:	
	BM17976	50 Lb. Wheel Weight, Rear Plastic (1) with Mounting Hardware *Use of Two Weights is Recommended.*	66.34
	R66949	Quik-Tatch Weight, 42 Lb. *Use of Four Weights is Recommended.*	62.06

54 In. Quick-Hitch Front Blade (For X400/X500 HDGT's, X700's, 425-455, 1023E, 1025R, 1026R, 2210, 2305, 2025R, 2032R, 2320, 2520, 2720, 4010, 4100, 4110 and 4115 Tractors)

Equipment for Base Machine

```
54 In. Clearing Width
 "Straight"
48 In. Clearing Width
 "Fully Angled"
Replaceable Cutting Edge
Heavy 11-Gauge, Curved Blade
Angled Left or Right Up
 to 27 Degrees
Two Adjustable Skid Shoes
Reinforced Angle Bar on
 Back of Blade
Spring Breakaway with
 Lock-Out Pin
Less Front Hitch
Less Hydraulic Angling
```

CODE	ATTACHMENT IDENTIFIER	DESCRIPTION	SUGGESTED LIST PRICE USD ($)
		Select One Code From Each Required Category	
		BASE MACHINE	
		F.O.B. Davenport, Iowa	
1491M		54 In. Quick-Hitch Front Blade (For X400/X500 HDGT's, X700's, 425-455, 1023E, 1025R, 1026R, 2210, 2305, 2025R, 2032R, 2320, 2520, 2720, 4010, 4100, 4110 and 4115 Tractors) *X700, X710, X465, X475 and 425 Require BM20761 Hydraulic Coupler Kit.* *Compact Tractors Require Dual Selective Control Valve and Front Attaching Support Kit. See Sales Manual for Front Attaching Support Requirements.* *See Sales Manual for Ballast Requirements.*	515.00
		FRONT QUICK-HITCH	
1000		Front Quick-Hitch and Hydraulic Lift (For X400/X500 HDGT's, X700's)	603.00
1001		Front Quick-Hitch and Hydraulic Lift (425, 445, 455)	625.00
1006		Front Quick-Hitch and Hydraulic Lift (2210, 2305)	641.00
1007		Front Quick-Hitch and Hydraulic Lift (2025R, 2032R, 2320, 2520, 2720, 4010, 4100, 4110, 4115)	688.00
1008		Front Quick-Hitch and Hydraulic Lift(1023E, 1025R, 1026R)	688.00
1010		Less Front Quick-Hitch	In Base Price
		HYDRAULIC ANGLING (REQUIRED FOR OPERATION)	
2000		Hydraulic Angling (For X400/X500 HDGT's, X700's) *BM20761 Hydraulic Coupler Kit Required on X700, X710, X465 and X475.*	186.00
2001		Hydraulic Angling (425, 445, 455) *BM20761 Hydraulic Coupler Kit Required on 425 Tractor.*	161.00
2005		Hydraulic Angling (2210, 2305)	187.00
2006		Hydraulic Angling (2025R, 2032R, 2320, 2520, 2720, 4010, 4100, 4110, 4115)	193.00

54 In. Quick-Hitch Front Blade (For X400/X500 HDGT's, X700's, 425-455, 1023E, 1025R, 1026R, 2210, 2305, 2025R, 2032R, 2320, 2520, 2720, 4010, 4100, 4110 and 4115 Tractors)

Continued

CODE	ATTACHMENT IDENTIFIER	DESCRIPTION	SUGGESTED LIST PRICE USD ($)
		HYDRAULIC ANGLING (REQUIRED FOR OPERATION) Continued...	
2007		Hydraulic Angling (1023E, 1025R, 1026R)	187.00
2010		Less Hydraulic Angling	In Base Price
		ATTACHMENTS - ORDER AS DESIRED	
		European CE Kit:	
9100		European CE Certification Kit	No Charge
		ATTACHMENTS FOR FIELD CONVERSION	
		Front Hitch:	
	LVB26047	Front Quick-Hitch and Hydraulic Lift (1023E, 1025R, 1026R)	788.59
	LVB24898	Front Quick-Hitch and Hydraulic Lift (2025R, 2032R, 2320 - 2720) *Fits also 4010, 4100, 4110 and 4115 Tractors for 47SB only.*	788.59
	BM20921	Front Quick-Hitch and Hydraulic Lift (2305) *Fits also 2210 Tractors (for 47SB only).*	736.16
	BM17347	Front Quick-Hitch and Hydraulic Lift (415, 425, 445, 455)	715.83
	BM19782	Front Quick-Hitch and Hydraulic Lift (X400/X500 HDGT's, X700's)	692.29
		Hydraulics:	
	LVB26108	Hydraulic Angling (1023E, 1025R, 1026R)	215.07
	LVB24901	Hydraulic Angling (2025R, 2032R, 2320, 2520, 2720, 4010, 4100, 4110, 4115)	220.41
	BM17650	Hydraulic Angling (415, 425, 445, 455)	185.11
	BM20837	Hydraulic Angling (X400/X500 HDGT's, X700's)	212.93
	BM20922	Hydraulic Angling Kit (2210, 2305)	215.07
	BM20761	Hydraulic Coupler Kit *Required on X700, X465, X475 and 425 Tractors.*	54.57
		Miscellaneous:	
	BM20714	Click-N-Go Bracket (X400/X500 HDGT's, X700's)	112.36
	LVB25302	Front Attaching Support Kit *For 2520, 2720, 4100, 4110, 4115 Tractors. See Sales Manual for Front Attaching Support Requirements.*	59.91
	LVB26046	Front Attaching Support Kit (1023E, 1025R, 1026R) *See Sales Manual for Front Attaching Support Requirements.*	67.41
	LVB24895	Front Attaching Support Kit (2025R, 2320) *See Sales Manual for Front Attaching Support Requirements.*	82.39
	LVB25396	Front Attaching Support Kit (2305) *Fits also 2210 Tractors (for 47SB only.) See Sales Manual for Front Attaching Support Requirements.*	59.91

54 In. Quick-Hitch Front Blade (For X400/X500 HDGT's, X700's, 425-455, 1023E, 1025R, 1026R, 2210, 2305, 2025R, 2032R, 2320, 2520, 2720, 4010, 4100, 4110 and 4115 Tractors)

Continued

CODE	ATTACHMENT IDENTIFIER	DESCRIPTION	SUGGESTED LIST PRICE USD ($)
		ATTACHMENTS FOR FIELD CONVERSION Continued...	
	LVB24899	Front Hitch/Mid-Mount Mower Combo Bracket (2025R, 2032R, 2320-2720) *Compatible with 4115 Tractor also. Required for Tool Free Change Between 54D or 62D OnRamp Mid-Mount Mower and Quik-Tatch Front Hitch (2025R, 2032R, 2320, 2520, 2720, 4115).*	127.33
	BM20753	Front Light Kit *For X400/X500 HDGT and X700 Series Garden Tractors.*	207.59
	AM119321	Heavy Duty Skid Shoe (1)	See Parts
	TY15956	Tire Chains (Pair) for 23x10.50-12 In. Drive Tires *All Wheel Steer Tractors with Standard 23x10.50-12 In. Tires Require BM18021 Wheel Spacer Kit to Provide Clearance Between Tire Chains and Steering Linkage.*	See Parts
	TY15845	Tire Chains (Pair) for 23x10.50-12 In. Rear Tires (318, 322, 332)	See Parts
	TY15841	Tire Chains (Pair) for 23x8.50-12 In. Drive Tires	See Parts
	BM22725	Wheel Spacer Kit *For all Wheel Steer Tractors when Installing TY15956 Chains.*	157.29
		Order Zone:	
	LP54000	54 In. Tractor Shovel *For X400/X500 HDGT's and X700's Only. Go to Order Zone for Specific Requirements.*	In Catalog
		Seats / Wheels / Tires:	
	TY15958	Tire Chains (Pair) for 26x12-12 Tires	See Parts
		Weights:	
	BM20715	Ballast Box (Click-N-Go) (X400/X500 HDGT's, X700's) *Requires BM20714 Click-N-Go Bracket.*	283.56
	R66949	Quik-Tatch Weight, 42 Lb.	62.06
	BM20779	Rear Click-N-Go Weight Bracket (X400/X500 HDGT's, X700's) *Requires BM20714 Click-N-Go Bracket.*	156.21

ROPS Hard Cab (For X710,X730,X734,X738,X739,X750,X754,X758 Garden Tractors)

Equipment for Base Machine

Modular Design
ROPS Certified
Steel Doors
Sliding Glass Windows
Front windshield wiper
Safety Glass Rear Window

CODE	ATTACHMENT IDENTIFIER	DESCRIPTION	SUGGESTED LIST PRICE USD ($)
		Select One Code From Each Required Category	
		BASE MACHINE	
		F.O.B. Davenport, Iowa	
9356M		ROPS Hard Cab (For X710,X730,X734,X738,X739,X750,X754,X758 Garden Tractors)	4,799.00
		DESTINATION	
001A		US/Canada	In Base Price
		ATTACHMENTS FOR FIELD CONVERSION	
		Miscellaneous:	
	BM24425	Auxiliary Alternator Kit (X710, X730, X734, X738, X739, X700, X720, X724, X728, X729, X475, X485, X575, X585) *Supplements Standard 20 Amp Alternator. Recommended with Heated Cabs.*	388.41
	BM25033	Heater, Tuck-Away	457.96

ROPS Hard Cab (For X400/X500 HDGT and X700, X720, X724, X728, X729, X740, X744, X748, X749 Garden Tractors)

Equipment for Base Machine

Modular Design
ROPS Certified
Steel Doors
Sliding Glass Windows
Safety Glass Rear Window

CODE	ATTACHMENT IDENTIFIER	DESCRIPTION	SUGGESTED LIST PRICE USD ($)
		Select One Code From Each Required Category	
		BASE MACHINE	
		F.O.B. Davenport, Iowa	
9354M		ROPS Hard Cab (For X400/X500 HDGT and X700, X720, X724, X728, X729, X740, X744, X748, X749 Garden Tractors) *Not Compatible with 45 Loader.* *Cab is Shipped in two Boxes.*	3,849.00
		ATTACHMENTS FOR FIELD CONVERSION	
		Miscellaneous:	
	BM20990	Alternator Kit, 40 Amp (X740, X744, X748, X750, X754, X758, X495, X595) *Replaces Standard 20 Amp Alternator Recmmended with Heated Cab. Standard Equipment on MY2007 (Serial 020001-).*	499.69
	BM23194	Auxiliary Alternator Kit (X700, X720, X724, X728, X729, X475, X485, X575, X585) *Supplements Standard 20 Amp Alternator. Recommended with Heated Cabs.*	388.41
	BM20931	Exterior Rear View Mirror Kit (Set of 2)	110.21
	BM21480	Heater, Tuck-Away	438.70
	BM20932	Strobe Light	145.51
	BM20930	Switch Panel Kit/Fuse Block	249.31
	BM20934	Wiper, Electric	206.51

ROPS Soft Cab (For X400/X500 HDGT and X700, X720, X724, X728, X729, X740, X744, X748, X749 Garden Tractors)

Equipment for Base Machine

Modular Design
ROPS Certified
Vinyl Doors
Clear Vinyl Windows
Clear Vinyl Rear Window

CODE	ATTACHMENT IDENTIFIER	DESCRIPTION	SUGGESTED LIST PRICE USD ($)
		Select One Code From Each Required Category	
		BASE MACHINE	
		F.O.B. Davenport, Iowa	
9355M		ROPS Soft Cab (For X400/X500 HDGT and X700, X720, X724, X728, X729, X740, X744, X748, X749 Garden Tractors) *Is compatible with 45 Loader.*	2,689.00
		ATTACHMENTS FOR FIELD CONVERSION	
		Miscellaneous:	
	BM20990	Alternator Kit, 40 Amp (X740, X744, X748, X750, X754, X758, X495, X595) *Replaces Standard 20 Amp Alternator Recmmended with Heated Cab. Standard Equipment on MY2007 (Serial 020001-).*	499.69
	BM23194	Auxiliary Alternator Kit (X700, X720, X724, X728, X729, X475, X485, X575, X585) *Supplements Standard 20 Amp Alternator. Recommended with Heated Cabs.*	388.41
	BM20931	Exterior Rear View Mirror Kit (Set of 2)	110.21
	BM21480	Heater, Tuck-Away	438.70
	BM20932	Strobe Light	145.51
	BM20930	Switch Panel Kit/Fuse Block	249.31
	BM20934	Wiper, Electric	206.51

Weather Enclosure (For X400/X500 HDGT and X700, X720, X724, X728, X729, X740, X744, X748, X749 Garden Tractors)

Equipment for Base Machine

16 Gauge Steel Tubing
Construction
Molded Plastic Roof
Vinyl Fabric Doors and
Sides
Lexan Window

CODE	ATTACHMENT IDENTIFIER	DESCRIPTION	SUGGESTED LIST PRICE USD ($)
		Weather Enclosure	
		Weather Enclosure is not Modular Design, not ROPS Certified and no Wiper as Standard Equipment.	
		ATTACHMENTS FOR FIELD CONVERSION	
		Miscellaneous:	
	BM20482	Soft Weather Enclosure	1,074.29
	BM20923	Windshield, Safety Glass	198.00
	BM20925	Wiper, 12V Electric *Requires BM20923 Windshield*	205.00

45 Loader
(For X400/X500 HDGT and X700 Series Two Wheel Steer Tractors, Not for X465 Model or X700 Signature Series Tractors)

Equipment for Base Machine

Lift Height: 73"
Lift Capacity:
Boom Breakout Force
770 Lbs.(349 kg)
640 Lbs.(290 kg) to
36"
385 Lbs.(175 kg) to
Maximum Lift Height
Bucket Rollback Force
@ Ground Line 740 Lbs.
(336 kg)

Bucket Width - 48"
(122 cm)
Bucket Capacity (Struck)
5.0 Cu. Ft.
Integral Parking Support
Cylinder Diameter
Lift - 1.5" (38 mm)
Bucket - 1.75" (44 mm)
Quik-Tatch Mounting
Hoses and Couplers
Tractor Transaxle

Hydrostatic Pressure
Relief Valve

CODE	ATTACHMENT IDENTIFIER	DESCRIPTION	SUGGESTED LIST PRICE USD ($)
		Select One Code From Each Required Category	
		BASE MACHINE	
		F.O.B. Davenport, Iowa	
3990M		45 Loader (For X400/X500 HDGT and X700 Series Two Wheel Steer Tractors, Not for X465 Model or X700 Signature Series Tractors) *Tractor ballasting required. See operator's manual/sales manual.* *X475 and the X700 model require BM20761 Hydraulic Coupler Kit. Requires AM131526 Hydraulic Cylinder Lock-Out Valve (must order from parts). Requires Transaxle Hydrostatic Relief Valve (included with loader).*	3,489.00
		TRANSAXLE HYDROSTATIC RELIEF VALVE	
1000		2WD Transaxle Hydrostatic Relief Valve (X400 HDGT's, X700, X720, X740)	Same Price
1001		4WD Transaxle Hydrostatic Relief Valve (X500 HDGT's, X728, X748)	In Base Price
		Ballast Box	
2000		Ballast Box (Click-N-Go) *Requires BM20714 Click-N-Go Bracket*	243.00
2002		Ballast Box (Category 1 3-Pt. Hitch)	243.00
2010		Less Ballast Box	In Base Price
		ATTACHMENTS FOR FIELD CONVERSION	
		Hydraulics:	
	M146148	Free-Wheeling Valve Control Lever *Included with loader. Must be installed with Transaxle Hydrostatic relief valve on any X400/X500 HDGT or X700 Series Tractor equipped with a Loader.*	See Parts

45 Loader
(For X400/X500 HDGT and X700 Series Two Wheel Steer Tractors, Not for X465 Model or X700 Signature Series Tractors)

Continued

CODE	ATTACHMENT IDENTIFIER	DESCRIPTION	SUGGESTED LIST PRICE USD ($)
		ATTACHMENTS FOR FIELD CONVERSION Continued...	
	AM134625	Hydraulic Cylinder Lockout Valve	See Parts
	BW15043	Transaxle Hydrostatic Relief Valve *Included with Loader. Must be Installed on any X400 Series Tractor Equipped with a Front End Loader. Requires M146148 Free-Wheeling Valve Control Lever.*	154.09
	BW15044	Transaxle Hydrostatic Relief Valve *Included with Loader. Must be Installed on any X500 Series HDGT, X728 or X748 Tractor Equipped with a front end loader. Requires M146148 Free-Wheeling Valve Control Lever.*	154.09
		Miscellaneous:	
	BM17981	12 Volt Work Light Kit	51.36
	BW15041	48 In. Bucket *For Replacement Only.*	593.86
	BM20714	Click-N-Go Bracket (X400/X500 HDGT's, X700's)	112.36
	AM131526	Hydraulic Cylinder Lockout Valve	See Parts
		Weights:	
	BM17972	50 Lb. Cast Iron Wheel Weight (1) *Requires BM17985 Wheel Weight Mounting Hardware Kit.*	128.40
	BM17976	50 Lb. Wheel Weight, Rear Plastic (1) with Mounting Hardware	66.34
	BM17973	72 Lb. Cast Iron Starter Wheel Weight (1)	181.90
	BW14313	Ballast Box (Category 1, 3-Pt. Hitch)	315.66
	BM20715	Ballast Box (Click-N-Go) (X400/X500 HDGT's, X700's) *Requires BM20714 Click-N-Go Bracket.*	283.56
	BM18101	Mounting Hardware (1) for Attaching 72 Lb. Starter Weight and (2) 50 Lb. Cast Iron Weights on 26 In. Tire	28.89
	BM18089	Mounting Hardware (1) for Attaching 72 Lb. Starter Weight on 26x12-12 Tire	21.40
	R66949	Quik-Tatch Weight, 42 Lb.	62.06
	BM20779	Rear Click-N-Go Weight Bracket (X400/X500 HDGT's, X700's) *Requires BM20714 Click-N-Go Bracket.*	156.21

7 Bu. Rear Bagger
(For Riding Mowers)

Equipment for Base Machine

```
7 BUSHEL HOPPER ASSEMBLY:          Installation and Removal
Polypropylene Hopper Top          Air Flow Indicator
Two Easy-to-Empty Bags
Quik-Tatch Mounting
POWER FLOW CHUTE:
Handle for Easy
```

CODE	ATTACHMENT IDENTIFIER	DESCRIPTION	SUGGESTED LIST PRICE USD ($)
		ATTACHMENTS FOR FIELD CONVERSION	
		Material Collection System Hoppers:	
	BM20452	7 Bushel Hopper Assembly *Requires Appropriate Rear Bagger Chute. Front Ballast is Required when Bagging. Order BM17963, Front Weight Kit and BM17979, Weight Mounting Hardware.*	445.11
		Material Collection System Power Flow/Rear Bagger Chutes:	
	BM20384	Rear Bagger Chute for 30 In. and 38 In. Mowers	71.69
		Miscellaneous:	
	BM17963	Front Weight Kit	140.17
	BM17979	Weight Mounting Hardware	10.70

7 Bu. Rear Bagger and 7 Bu. Power Flow Material Collection Systems (For STX38 and STX46 Lawn Tractors)

Equipment for Base Machine

```
7 BUSHEL HOPPER ASSEMBLY:
Polypropylene Hopper Top
Two Easy-to-Empty Bags
Quik-Tatch Mounting
POWER FLOW CHUTE:
Handle for Easy
 Installation and Removal
Air Flow Indicator
BLOWER ASSEMBLY:
Easy Installation and
 Removal
Polyethylene Housing
```

CODE	ATTACHMENT IDENTIFIER	DESCRIPTION	SUGGESTED LIST PRICE USD ($)
		ATTACHMENTS FOR FIELD CONVERSION	
		Material Collection System Hoppers:	
	BM20453	7 Bushel Hopper Assembly *Requires Appropriate Rear Bagger Chute, or Blower Assembly and Power Flow Chute.*	445.11
		Material Collection System Power Flow Blowers:	
	BM16659	Blower Assembly-38 In. Mower (Yellow) *STX38 (- 210,000).*	541.41
		Material Collection System Power Flow/Rear Bagger Chutes:	
	BM20988	Power Flow Chute	73.83
	BM20982	Rear Bagger Chute for 38 In. Mowers	73.83
		Mower Deck and Mower Deck Attachments:	
	M83459	High Lift Mower Blade (38 In. Mower)	See Parts
	AM103851	Mower Lip Kit (Left), 38 In. Mower	See Parts
	AM103852	Mower Lip Kit (Right Rear), 38 In. Mower	See Parts

7 Bu. Rear Bagger and 7 Bu. Power Flow Material Collection Systems (For LT Lawn Tractors)

Equipment for Base Machine

```
7 BUSHEL HOPPER ASSEMBLY:
Polypropylene Hopper Top
Two Easy-to-Empty Bags
Quik-Tatch Mounting
POWER FLOW CHUTE:
Handle for Easy
 Installation and Removal
Air Flow Indicator
```

```
BLOWER ASSEMBLY:
For 48 In. and 54 In. Mowers
Easy Installation and
 Removal
Polyethylene Housing
```

CODE	ATTACHMENT IDENTIFIER	DESCRIPTION	SUGGESTED LIST PRICE USD ($)
		ATTACHMENTS FOR FIELD CONVERSION	
		Material Collection System Hoppers:	
	BM20454	7 Bushel Hopper Assembly *Requires Appropriate Rear Bagger Chute or Blower Assembly and Power Flow Chute.*	445.11
		Material Collection System Power Flow Blowers:	
	BM20004	QT Blower Assembly for 38 In. Mower	600.27
	BM21380	QT Blower Assembly for 48C Mower (LT166, LT180, LT190)	541.41
		Material Collection System Power Flow/Rear Bagger Chutes:	
	BM20988	Power Flow Chute	73.83
	BM20942	Rear Bagger Chute - 42C Mower, LT Only	90.96
	BM20493	Rear Bagger Chute 38 In. Mower, LT Only	74.90
		Mower Deck and Mower Deck Attachments:	
	AM115595	48 In. Rear Lip Kit (1992 and prior)	See Parts
	BM20505	Front Blowout Baffle for 42 In. Mower (42C/42X)	38.51
	M135589	Hi Lift Blade For 48 In. Mower	See Parts
	M83459	High Lift Mower Blade (38 In. Mower)	See Parts
	BM19894	Leaf Bagging Kit (48C/48X Mower) *Contains Three Bolt-on Deck Lips for Improved Bagging of Leaves.*	99.51
	AM103851	Mower Lip Kit (Left), 38 In. Mower	See Parts
	AM103852	Mower Lip Kit (Right Rear), 38 In. Mower	See Parts

7 Bu. Rear Bagger and 7 Bu. Power Flow Material Collection System (For LX Lawn Tractors)

Equipment for Base Machine

```
7 BUSHEL HOPPER ASSEMBLY:
Polypropylene Hopper Top
Two Easy-to-Empty Bags
Quik-Tatch Mounting
POWER FLOW CHUTE:
Handle for Easy
 Installation and Removal
Air Flow Indicator
```

```
BLOWER ASSEMBLY:
For 48 In. and 54 In. Mowers
Easy Installation and
 Removal
Polyethylene Housing
```

CODE	ATTACHMENT IDENTIFIER	DESCRIPTION	SUGGESTED LIST PRICE USD ($)
		ATTACHMENTS FOR FIELD CONVERSION	
		Material Collection System Hoppers:	
	BM20455	7 Bushel Hopper Assembly *For LX172-LX188 and LX255, LX266, LX277, LX277 AWS, LX280 AWS and LX288 Lawn Tractors.* *Requires Appropriate Rear Bagger Chute or Blower Assembly and Power Flow Chute. LX277 AWS and LX280 AWS Requires BM19797, Adapter Kit.*	445.11
	BM20456	7 Bushel Hopper Assembly *For LX280 (Not LX280 AWS) and LX289.* *Requires Appropriate Rear Bagger Chute or Blower Assembly and Power Flow Chute.*	445.11
		Material Collection System Power Flow Blowers:	
	BM22696	48C/48X High-Performance Blower Assembly for Mowers with Rotateable Anti-Scalp Wheels (X300/X500 M-T/X700) *Requires BM21681 Power Flow Chute.*	541.41
	BM22697	54C/54X/54D High-Performance Blower Assembly (X300/X500 M-T/X700, 1023E, 1025R, 1026R, 2305, 2025R, 2320, 2210 and 4115) *Requires BM21681 Power Flow Chute.*	541.41
	BM19089	Blower Assembly for 48 In. Mower *Not for 48C Mower. Requires BM20988 Power Flow Chute.*	541.41
	BM19090	Blower Assembly for 54 In. Mower *Not for 54C Mower. Requires BM20988 Power Flow Chute.*	541.41
	BM16659	Blower Assembly-38 In. Mower (Yellow) *Use for LX277 AWS only and LX280 AWS. Requires BM20988 Power Flow Chute.*	541.41
	BM18770	QT Blower Assembly for 38 In. Mower (Yellow 38 In. Decks) *Not for use on LX277 AWS or LX280 AWS. Requires BM20988 Power Flow Chute.*	594.91
		Material Collection System Power Flow/Rear Bagger Chutes:	
	BM20988	Power Flow Chute	73.83
	BM21681	Power Flow Chute (7 bu.) *For 48C, 48X, 54C or 54X Series Blowers.*	114.49
	BM20982	Rear Bagger Chute for 38 In. Mowers	73.83
		Miscellaneous:	
	BM19797	Adapter Kit for LX277 AWS and LX280 AWS	31.03

7 Bu. Rear Bagger and 7 Bu. Power Flow Material Collection System (For LX Lawn Tractors)

Continued

CODE	ATTACHMENT IDENTIFIER	DESCRIPTION	SUGGESTED LIST PRICE USD ($)
		ATTACHMENTS FOR FIELD CONVERSION Continued...	
		Mower Deck and Mower Deck Attachments:	
	AM115595	48 In. Rear Lip Kit (1992 and prior)	See Parts
	M139977	Bagging Mower Blade (42C Mower)	See Parts
	BM20505	Front Blowout Baffle for 42 In. Mower (42C/42X)	38.51
	M135589	Hi Lift Blade For 48 In. Mower	See Parts
	M83459	High Lift Mower Blade (38 In. Mower)	See Parts
	BM19894	Leaf Bagging Kit (48C/48X Mower) *Contains Three Bolt-on Deck Lips for Improved Bagging of Leaves.*	99.51
	BM20985	Leaf Bagging Kit (54C/54X Mower)	124.11
	AM103851	Mower Lip Kit (Left), 38 In. Mower	See Parts
	AM103852	Mower Lip Kit (Right Rear), 38 In. Mower	See Parts

7 Bu. Rear Bagger and 7 Bu. Power Flow Material Collection Systems (For SST Lawn Tractors)

Equipment for Base Machine

```
7 BUSHEL HOPPER ASSEMBLY:
Polypropylene Hopper Top
Two Easy-to-Empty Bags
Quik-Tatch Mounting
POWER FLOW CHUTE:
Handle for Easy
 Installation and Removal
Air Flow Indicator
```

```
BLOWER ASSEMBLY:
For 48 In. and 54 In. Mowers
Easy Installation and
 Removal
Polyethylene Housing
```

CODE	ATTACHMENT IDENTIFIER	DESCRIPTION	SUGGESTED LIST PRICE USD ($)
		ATTACHMENTS FOR FIELD CONVERSION	
		Material Collection System Power Flow Blowers:	
	BM22696	48C/48X High-Performance Blower Assembly for Mowers with Rotateable Anti-Scalp Wheels (X300/X500 M-T/X700)	541.41
		Material Collection System Power Flow/Rear Bagger Chutes:	
	BM20988	Power Flow Chute	73.83
	BM21681	Power Flow Chute (7 bu.) *For 48C, 48X, 54C or 54X Series Blowers.*	114.49
	BM20943	Rear Bagger Chute for 42 In. All Purpose Mower (42AP)	86.67
		Mower Deck and Mower Deck Attachments:	
	BM20505	Front Blowout Baffle for 42 In. Mower (42C/42X)	38.51
	M135589	Hi Lift Blade For 48 In. Mower	See Parts
	BM19894	Leaf Bagging Kit (48C/48X Mower) *Contains Three Bolt-on Deck Lips for Improved Bagging of Leaves.*	99.51
		Weights:	
	BM20937	Front Weight Kit (SST) *Warning Label not Included. French Canadian Dealers Need to Order M127333 Warning Label. Order M127333 Warning Label.*	60.99

7 Bu. Rear Bagger and 7 Bu. Power Flow Material Collection Systems (For GT Garden Tractors)

Equipment for Base Machine

```
7 BUSHEL HOPPER ASSEMBLY:
Polypropylene Hopper Top
Two Easy-to-Empty Bags
Quik-Tatch Mounting
POWER FLOW CHUTE:
Handle for Easy
 Installation and Removal
Air Flow Indicator
```

```
BLOWER ASSEMBLY:
For 48 In. and 54 In. Mowers
Easy Installation and
 Removal
Polyethylene Housing
```

CODE	ATTACHMENT IDENTIFIER	DESCRIPTION	SUGGESTED LIST PRICE USD ($)
		ATTACHMENTS FOR FIELD CONVERSION	
		Material Collection System Hoppers:	
	BM20456	7 Bushel Hopper Assembly *Requires Appropriate Rear Bagger Chute or Blower Assembly and Power Flow Chute.*	445.11
		Material Collection System Power Flow Blowers:	
	BM22696	48C/48X High-Performance Blower Assembly for Mowers with Rotateable Anti-Scalp Wheels (X300/X500 M-T/X700) *Requires BM21681 Power Flow Chute.*	541.41
	BM22697	54C/54X/54D High-Performance Blower Assembly (X300/X500 M-T/X700, 1023E, 1025R, 1026R, 2305, 2025R, 2320, 2210 and 4115) *Requires one AM133822 Wheel Adjusting Pin for use on Model Year 2004 Mowers. Requires BM21681 Power Flow Chute.*	541.41
	BM19089	Blower Assembly for 48 In. Mower *Not for 48C Mower. Requires BM20988 Power Flow Chute.*	541.41
	BM19090	Blower Assembly for 54 In. Mower *Not for 54C Mower. Requires BM20988 Power Flow Chute.*	541.41
	BM16659	Blower Assembly-38 In. Mower (Yellow) *Requires BM20988 Power Flow Chute*	541.41
		Material Collection System Power Flow/Rear Bagger Chutes:	
	BM20988	Power Flow Chute	73.83
	BM21681	Power Flow Chute (7 bu.) *For 48C, 48X, 54C or 54X Series Blowers.*	114.49
	BM20982	Rear Bagger Chute for 38 In. Mowers	73.83
		Mower Deck and Mower Deck Attachments:	
	AM115595	48 In. Rear Lip Kit (1992 and prior) *Bolt on Lips Provide Increased Vacuum Action.*	See Parts
	M139977	Bagging Mower Blade (42C Mower) *For LX, GT and GX Tractors.*	See Parts
	BM20505	Front Blowout Baffle for 42 In. Mower (42C/42X)	38.51
	M135589	Hi Lift Blade For 48 In. Mower	See Parts
	M135590	Hi Lift Blade for 54 In. Mower	See Parts

7 Bu. Rear Bagger and 7 Bu. Power Flow Material Collection Systems (For GT Garden Tractors)

Continued

CODE	ATTACHMENT IDENTIFIER	DESCRIPTION	SUGGESTED LIST PRICE USD ($)
		ATTACHMENTS FOR FIELD CONVERSION Continued...	
	BM19894	Leaf Bagging Kit (48C/48X Mower) *Contains Three Bolt-on Deck Lips for Improved Bagging of Leaves.*	99.51
	BM20985	Leaf Bagging Kit (54C/54X Mower)	124.11
	AM115596	Rear Lip Kit (1992 and prior) for 54 In. Mower *Bolt on Lips Provide Increased Vacuum Action.*	See Parts

7 Bu. Rear Bagger and 7 Bu. Power Flow Material Collection Systems (For GX and 300 Series Garden Tractors)

Equipment for Base Machine

```
7 BUSHEL HOPPER ASSEMBLY:
Polypropylene Hopper Top
Two Easy-to-Empty Bags
Quik-Tatch Mounting
POWER FLOW CHUTE:
Handle for Easy
 Installation and Removal
Air Flow Indicator
```

```
BLOWER ASSEMBLY:
For 48 In. and 54 In. Mowers
Easy Installation and
 Removal
Polyethylene Housing
```

CODE	ATTACHMENT IDENTIFIER	DESCRIPTION	SUGGESTED LIST PRICE USD ($)
		ATTACHMENTS FOR FIELD CONVERSION	
		Material Collection System Hoppers:	
	BM20456	7 Bushel Hopper Assembly *Requires Appropriate Rear Bagger Chute or Blower Assembly and Power Flow Chute.*	445.11
		Material Collection System Power Flow Blowers:	
	BM22696	48C/48X High-Performance Blower Assembly for Mowers with Rotateable Anti-Scalp Wheels (X300/X500 M-T/X700) *Requires BM21681 Power Flow Chute.*	541.41
	BM22697	54C/54X/54D High-Performance Blower Assembly (X300/X500 M-T/X700, 1023E, 1025R, 1026R, 2305, 2025R, 2320, 2210 and 4115) *Requires BM21681 Power Flow Chute.*	541.41
	BM19089	Blower Assembly for 48 In. Mower *Not for 48C Mower. Requires BM20988 Power Flow Chute.*	541.41
	BM19090	Blower Assembly for 54 In. Mower *Not for 54C Mower. Requires BM20988 Power Flow Chute.*	541.41
	BM16659	Blower Assembly-38 In. Mower (Yellow) *Requires M118053 Right Rear Draft Arm. Also requires BM18851 Power Flow Chute.*	541.41
		Material Collection System Power Flow/Rear Bagger Chutes:	
	BM20988	Power Flow Chute	73.83
	BM21681	Power Flow Chute (7 bu.) *For 48C, 48X, 54C or 54X Series Blowers.*	114.49
	BM20982	Rear Bagger Chute for 38 In. Mowers	73.83
		Mower Deck and Mower Deck Attachments:	
	AM115595	48 In. Rear Lip Kit (1992 and prior) *Bolt on Lips Provide Increased Vacuum Action.*	See Parts
	M135589	Hi Lift Blade For 48 In. Mower	See Parts
	M135590	Hi Lift Blade for 54 In. Mower	See Parts
	BM19894	Leaf Bagging Kit (48C/48X Mower) *Contains Three Bolt-on Deck Lips for Improved Bagging of Leaves.*	99.51
	BM20985	Leaf Bagging Kit (54C/54X Mower)	124.11

7 Bu. Rear Bagger and 7 Bu. Power Flow Material Collection Systems (For GX and 300 Series Garden Tractors)

Continued

CODE	ATTACHMENT IDENTIFIER	DESCRIPTION	SUGGESTED LIST PRICE USD ($)
		ATTACHMENTS FOR FIELD CONVERSION Continued...	
	AM115596	Rear Lip Kit (1992 and prior) for 54 In. Mower *Bolt on Lips Provide Increased Vacuum Action.*	See Parts

7 Bu. Power Flow Material Collection System
(For 425, 445, 455 Garden Tractors)

Equipment for Base Machine

```
7 BUSHEL HOPPER ASSEMBLY:
Polypropylene Hopper Top
Two Easy-to-Empty Bags
Quik-Tatch Mounting
POWER FLOW CHUTE:
Handle for Easy
 Installation and Removal
Air Flow Indicator
```

```
BLOWER ASSEMBLY:
For 48 In. and 54 In. Mowers
Easy Installation and
 Removal
Polyethylene Housing
```

CODE	ATTACHMENT IDENTIFIER	DESCRIPTION	SUGGESTED LIST PRICE USD ($)
		ATTACHMENTS FOR FIELD CONVERSION	
		Material Collection System Hoppers:	
	BM20780	7 Bushel Hopper Assembly *Requires Appropriate Blower Assembly and Power Flow Chute.* *Also Requires BM20714, Click-N-Go Bracket.*	494.34
		Material Collection System Power Flow Blowers:	
	BM19089	Blower Assembly for 48 In. Mower	541.41
	BM19090	Blower Assembly for 54 In. Mower	541.41
		Material Collection System Power Flow/Rear Bagger Chutes:	
	BM20988	Power Flow Chute	73.83
		Miscellaneous:	
	BM20714	Click-N-Go Bracket (X400/X500 HDGT's, X700's)	112.36
		Mower Deck and Mower Deck Attachments:	
	AM115595	48 In. Rear Lip Kit (1992 and prior) *Bolt on Lips Provide Increased Vacuum Action.*	See Parts
	M135589	Hi Lift Blade For 48 In. Mower	See Parts
	M135590	Hi Lift Blade for 54 In. Mower	See Parts
	BM19894	Leaf Bagging Kit (48C/48X Mower) *Contains Three Bolt-on Deck Lips for Improved Bagging of Leaves.*	99.51
	AM115596	Rear Lip Kit (1992 and prior) for 54 In. Mower *Bolt on Lips Provide Increased Vacuum Action.*	See Parts

7 Bu. Power Flow Material Collection System (For X400/X500 HDGT and X700 Series Garden Tractors)

Equipment for Base Machine

```
7 BUSHEL HOPPER ASSEMBLY:
Polypropylene Hopper Top
Two Easy-to-Empty Bags
Quik-Tatch Mounting
POWER FLOW CHUTE:
Handle for Easy
 Installation and Removal
Air Flow Indicator
```

```
BLOWER ASSEMBLY:
For 48 In. and 54 In. Mowers
Easy Installation and
 Removal
Polyethylene Housing
```

CODE	ATTACHMENT IDENTIFIER	DESCRIPTION	SUGGESTED LIST PRICE USD ($)
		ATTACHMENTS FOR FIELD CONVERSION	
		Material Collection System Hoppers:	
	BM20780	7 Bushel Hopper Assembly *Requires Appropriate Blower Assembly and Power Flow Chute.* *Also Requires BM20714, Click-N-Go Bracket.*	494.34
		Material Collection System Power Flow Blowers:	
	BM20976	48C/48X High Performance Blower Assembly Adapter Kit *For use with 48C and 48X (Serial -050588) Mower Decks used on X400/X500HDGT and X700 Tractors if BM20667 Blower Assembly (Non-current) is used.*	42.80
	BM22696	48C/48X High-Performance Blower Assembly for Mowers with Rotateable Anti-Scalp Wheels (X300/X500 M-T/X700)	541.41
	BM22697	54C/54X/54D High-Performance Blower Assembly (X300/X500 M-T/X700, 1023E, 1025R, 1026R, 2305, 2025R, 2320, 2210 and 4115) *Requires BM21681 Power Flow Chute.*	541.41
	BM24333	54HC Power Flow for X700 Signature Series	630.23
	BM24514	60 In. High Performance Power Flow (For use with X700 HC and 7-Iron Decks and 1023E, 1025R and 1026R Decks)	719.04
		Material Collection System Power Flow/Rear Bagger Chutes:	
	BM21681	Power Flow Chute (7 bu.) *For 48C, 48X, 54C or 54X Series Blowers.*	114.49
		Miscellaneous:	
	BM20714	Click-N-Go Bracket (X400/X500 HDGT's, X700's)	112.36
		Mower Deck and Mower Deck Attachments:	
	BM19894	Leaf Bagging Kit (48C/48X Mower) *Contains Three Bolt-on Deck Lips for Improved Bagging of Leaves.*	99.51
	BM20985	Leaf Bagging Kit (54C/54X Mower)	124.11
	BM20986	Leaf Bagging Kit (62C/62X Mower)	138.03

3-Bag Power Flow Material Collection System (For X500 M-T, GT and GX)

Equipment for Base Machine

```
Hopper Volume = 14 Bushels
Polyethylene Hopper Top
3 Polyester Bags
Easy-to-Empty Bags
Bags will Accept Plastic
 Liners
Mechanical Hopper Top Lock
Gas Cylinder Lift Assist
No Tools Quik-Tatch Hitch
Fill-Minder Indicator
```

CODE	ATTACHMENT IDENTIFIER	DESCRIPTION	SUGGESTED LIST PRICE USD ($)
		ATTACHMENTS FOR FIELD CONVERSION	
		Material Collection System Hoppers:	
	BM21680	14 Bushel Hopper Assembly *Also Requires ""C or X"" Power Flow Blower Assembly and Power Flow Chute. Requires M146153 Bracket for use on GT and GX Tractors. Front Ballast is Recommended when Bagging. Especially on Hill or Inclines.*	934.11
		Material Collection System Power Flow Blowers:	
	BM22696	48C/48X High-Performance Blower Assembly for Mowers with Rotateable Anti-Scalp Wheels (X300/X500 M-T/X700) *For use with MY2006 X320 (Serial 010001-040000), X324 (Serial 010000-040000), Model X500 M-T Tractor (Serial 010001-020000), MY2008 X320 (Serial 085001-), MY2008 X324 (Serial 085001-) MY2008 X500 (Serial 030001-) and X360. Also for use with SKU21895 (48X with Rotateable Anti-Scalp Wheels) Cartoned Deck.*	541.41
	BM22697	54C/54X/54D High-Performance Blower Assembly (X300/X500 M-T/X700, 1023E, 1025R, 1026R, 2305, 2025R, 2320, 2210 and 4115)	541.41
		Material Collection System Power Flow/Rear Bagger Chutes:	
	BM21682	Power Flow Chute (14 bu)	141.24
		Miscellaneous:	
	BM18449	European Certification Kit for 7, 10, 15 Utility Carts *Includes Pictorial Decals, Manufacturer Certification Label, Year of Manufacture Label and English, French, German, Spanish and Italian Operator's Manuals.*	0.00

3-Bag Power Flow Material Collection System (For X400/X500 HDGT and X700 Series Garden Tractors)

Equipment for Base Machine

```
Hopper Volume = 14 Bushels
Polyethylene Hopper Top
3 Polyester Bags
Easy-to-Empty Bags
Bags will Accept Plastic
 Liners
Mechanical Hopper Top Lock
Gas Cylinder Lift Assist
No Tools Quik-Tatch Hitch
Fill-Minder Indicator
```

CODE	ATTACHMENT IDENTIFIER	DESCRIPTION	SUGGESTED LIST PRICE USD ($)
		ATTACHMENTS FOR FIELD CONVERSION	
		Material Collection System Hoppers:	
	BM20671	3-Bag Power Flow Material Collection System (For X400/X500 HDGT and X700 Series Garden Tractors) *Not compatible with 48X deck on X729 or X749 Tractors.* *Requires BM20714 Click-N-Go Bracket, Requires ""C"" Series high performance power flow blower assembly and power flow chute.* *Front ballast is recommended when bagging, especially on hills or inclines.*	952.30
		Material Collection System Power Flow Blowers:	
	BM20976	48C/48X High Performance Blower Assembly Adapter Kit *For use with 48C and 48X (Serial -050588) Mower Decks used on X400/X500HDGT and X700 Tractors if BM20667 Blower Assembly (Non-current) is used.*	42.80
	BM22696	48C/48X High-Performance Blower Assembly for Mowers with Rotateable Anti-Scalp Wheels (X300/X500 M-T/X700)	541.41
	BM22697	54C/54X/54D High-Performance Blower Assembly (X300/X500 M-T/X700, 1023E, 1025R, 1026R, 2305, 2025R, 2320, 2210 and 4115)	541.41
	BM24333	54HC Power Flow for X700 Signature Series	630.23
	BM24514	60 In. High Performance Power Flow (For use with X700 HC and 7-Iron Decks and 1023E, 1025R and 1026R Decks)	719.04
	BM21496	62 In. High Performance Power Flow (For Use with 62C or 62D Mower Decks X700, 2305, 2025R, 2032R, 2320, 2520, 2720, 2210 and 4115)	541.41
		Material Collection System Power Flow/Rear Bagger Chutes:	
	BM21682	Power Flow Chute (14 bu)	141.24
		Miscellaneous:	
	BM20714	Click-N-Go Bracket (X400/X500 HDGT's, X700's)	112.36

6.5 Bushel Hopper, Chute and Power Flow for 190C and G110, 54 In.

Equipment for Base Machine

```
Hopper Volume = 6.5 Bushels
ABS Hopper Top
2 Polyester Bags
Easy-to-Empty Bags
Bags will Accept Plastic
 Liners
```

```
Ployethylene Blower and Fan
will not Rust or Corrode
No Tools Cargo Mount
```

CODE	ATTACHMENT IDENTIFIER	DESCRIPTION	SUGGESTED LIST PRICE USD ($)
		ATTACHMENTS FOR FIELD CONVERSION	
		Material Collection System Hoppers:	
	BM21376	6.5 Bushel Hopper, Chute and Power Flow for 100 Series and G110, 54 In. *Front Ballast is Recommended when Bagging, Especially on Hills or Inclines.*	790.73

Mowers and Attachments for Mowers
For Non-Current Riding Lawn Equipment

CODE	ATTACHMENT IDENTIFIER	DESCRIPTION	SUGGESTED LIST PRICE USD ($)
		ATTACHMENTS FOR FIELD CONVERSION	
		Mower Deck and Mower Deck Attachments:	
	BM17870	48 In. Front Edge Kit	86.67
	BM18365	48 In. Mower (240, 245, 265)	1,296.84
	BM17879	48 In. Mower for 120, 140, 300, 314, 316, 317, 318, 322 and 332 Tractors *330, 322 and 332 Require M119871 Belt. 317 requires only AM119485 Attaching Parts Kit. 316 (80001-95000), 314, 312, 300, 140 and 120 requires one AM119485 Attaching Parts Kit and M87218 Belt. If tractor is not Currently Equipped with a Mower, Order Front Mounting Bracket Assembly (Mule Drive), Front Draft Arm Assembly and Mower Lift Strap Components through Parts.* *Order AM116964 Export Decal Kit thru Parts.*	1,330.01
	AM115595	48 In. Rear Lip Kit (1992 and prior)	See Parts
	BM18361	48 In. Side Discharge Mower *For LX100's, 325 and 345 Tractors. GT242, GT262 and GT275 Tractors Require AM117017 Straight Gauge Wheel Post. (See DTAC Solution 81025).*	1,229.43
	BM17871	54 In. Front Edge Kit	84.53
	SKU17206	54 In. Shaft Driven Mower (425, 445, 455)	1,700.00
	SKU19807	54 In. Side Discharge Mower (LX288, GT235, 325-355D)	1,285.00
	SKU24289	60-inch Shaft Driven Mower Deck (425, 445, 455)	2,350.00
	AM119679	Blowout Reduction Kit (48 In. Mower)	See Parts
	AM119680	Blowout Reduction Kit (54 In. Mower)	See Parts
	BM20985	Leaf Bagging Kit (54C/54X Mower)	124.11
	BM20986	Leaf Bagging Kit (62C/62X Mower)	138.03
	AM115361	Leaf Mulcher Kit *For 48 In. and 54 In. Mowers.*	See Parts
	AM108476	Mower Deck Wear Plate (38 In. Mower)	See Parts
	AM115596	Rear Lip Kit (1992 and prior) for 54 In. Mower	See Parts

38 in. Edge Xtra Deck (38X) (For X300 Tractor)

Equipment for Base Machine

38 In. Cutting Width
Two .67 In. StarLock Greaseable Spindles
Two Front 2.6 In. Wide Anti-Scalp Wheels
Wash Port
4 Point Mounting
Adjustable Down Stop
.25 In. Cut Height Increments
1 to 4 In. Cutting Heights

CODE	ATTACHMENT IDENTIFIER	DESCRIPTION	SUGGESTED LIST PRICE USD ($)

Select One Code From Each Required Category

BASE MACHINE

F.O.B. Janesville, Wisconsin

9038M		38 in. Edge Xtra Deck (38X) (For X300 Tractor) *Also order AM136646 Lift Assist Spring Kit when used on X300-38, X300-42X, X300-Less deck, X304-42X, or with MY2006-MY2009 (Serial 010001-150,000) X300-42M tractors.*	600.00

DESTINATION

0202		United States and Canada	In Base Price
0230		Australia and New Zealand	Same Price
0195		Mexico	Same Price
0250		All Other Countries	Same Price

ATTACHMENTS FOR FIELD CONVERSION

Mower Deck and Mower Deck Attachments:

	AM130907	Mower Deck Leveling Gauge	See Parts

42 in. Edge Xtra Deck (42X) (For X300, X304, and X310 Tractors)

Equipment for Base Machine

42 In. Cutting Width
Two .67 In. StarLock Greaseable Spindles
Two Front 2.6 In. Wide Anti-Scalp Wheels
Wash Port
4 Point Mounting
Adjustable Down Stop
.25 In. Cut Height Increments
1 to 4 In. Cutting Heights

CODE	ATTACHMENT IDENTIFIER	DESCRIPTION	SUGGESTED LIST PRICE USD ($)
		Select One Code From Each Required Category	
		BASE MACHINE	
		F.O.B. Janesville, Wisconsin	
9039M		42 in. Edge Xtra Deck (42X) (For X300, X304, and X310 Tractors) *Also order AM136646 Lift Assist Spring Kit when used on X300-38, X300-42X, X300-Less deck, X304-42X, or with MY2006-MY2009 (Serial 010001-150,000) X300-42M tractors.*	600.00
		DESTINATION	
0202		United States and Canada	In Base Price
0230		Australia and New Zealand	Same Price
0195		Mexico	Same Price
0250		All Other Countries	Same Price
		ATTACHMENTS FOR FIELD CONVERSION	
		Mower Deck and Mower Deck Attachments:	
	AM130907	Mower Deck Leveling Gauge	See Parts

42 in. Edge Mulch Deck (42M) (For X300 Tractor)

Equipment for Base Machine

```
42 In. Cutting Width                4 Point Mounting
Rear Discharge                      Adjustable Down Stop
Two .67 In. StarLock                .25 In. Cut Height Increments
 Greaseable Spindles                1 to 3.75 In. Cutting Heights
Two Front 2.6 In. Wide Anti-
 Scalp Wheels
Two Wash Ports
```

CODE	ATTACHMENT IDENTIFIER	DESCRIPTION	SUGGESTED LIST PRICE USD ($)
		Select One Code From Each Required Category	
		BASE MACHINE	
		F.O.B. Janesville, Wisconsin	
903RM		42 in. Edge Mulch Deck (42M) (For X300 Tractor) *Also order AM136646 Lift Assist Spring Kit when used on X300-38, X300-42X, X300-Less deck, X304-42X, or with MY2006-MY2009 (Serial 010001-150,000) X300-42M tractors.*	700.00
		DESTINATION	
0202		United States and Canada	In Base Price
0230		Australia and New Zealand	Same Price
0195		Mexico	Same Price
0250		All Other Countries	Same Price
		ATTACHMENTS FOR FIELD CONVERSION	
		Mower Deck and Mower Deck Attachments:	
	AM130907	Mower Deck Leveling Gauge	See Parts

48 in. Edge Xtra Deck with Rotateable Anti-Scalp Wheels (48X) (For X300, X320, X324, X360, X500, X534, and X540 Tractors)

Equipment for Base Machine

48 In. Cutting Width
Three .79 In. Greaseable Spindles
Two Front and Two Rear 2.6 In. Wide Rotateable Anti-Scalp Wheels
No Tools Anti-Scalp Wheel Cut Height Adjustment
Two 2.9 In Wide Front Anti-Scalp Rollers
Wash Port
4 Point Mounting
Adjustable Down Stop
.25 In. Cut Height Increments
1 to 4 In. Cutting Heights

CODE	ATTACHMENT IDENTIFIER	DESCRIPTION	SUGGESTED LIST PRICE USD ($)

Select One Code From Each Required Category

BASE MACHINE

F.O.B. Janesville, Wisconsin

903SM		48 in. Edge Xtra Deck with Rotateable Anti-Scalp Wheels (48X) (For X300, X320, X324, X360, X500, X534, and X540 Tractors) *Also order AM136646 Lift Assist Spring Kit when used on X300-38, X300-42X, X300-Less deck, X304-42X, or with MY2006-MY2009 (Serial 010001-150,000) X300-42M tractors.*	1,000.00

DESTINATION

0202		United States and Canada	In Base Price
0230		Australia and New Zealand	Same Price
0195		Mexico	Same Price
0250		All Other Countries	Same Price

ATTACHMENTS FOR FIELD CONVERSION

Mower Deck and Mower Deck Attachments:

	AM130907	Mower Deck Leveling Gauge	See Parts

54 in. Edge Xtra Deck (54X) (For X320, X500, X530, X534, and X540 Tractors)

Equipment for Base Machine

54 In. Cutting Width
Three .79 In. Greaseable Spindles
Two Front and Two Rear 2.6 In. Wide Rotateable Anti-Scalp Wheels
No Tools Anti-Scalp Wheel Cut Height Adjustment
Two 2.9 In Wide Front Anti-Scalp Rollers
Wash Port
4 Point Mounting
Adjustable Down Stop
.25 In. Cut Height Increments
1 to 4 In. Cutting Heights

CODE	ATTACHMENT IDENTIFIER	DESCRIPTION	SUGGESTED LIST PRICE USD ($)
		Select One Code From Each Required Category	
		BASE MACHINE	
		F.O.B. Janesville, Wisconsin	
903TM		54 in. Edge Xtra Deck (54X) (For X320, X500, X530, X534, and X540 Tractors) *Also order AM136646 Lift Assist Spring Kit when used on X300-38, X300-42X, X300-Less deck, X304-42X, or with MY2006-MY2009 (Serial 010001-150,000) X300-42M tractors.*	1,300.00
		DESTINATION	
0202		United States and Canada	In Base Price
0230		Australia and New Zealand	Same Price
0195		Mexico	Same Price
0250		All Other Countries	Same Price
		ATTACHMENTS FOR FIELD CONVERSION	
		Mower Deck and Mower Deck Attachments:	
	AM130907	Mower Deck Leveling Gauge	See Parts

48 In. Shaft Driven Convertible Mower Deck (48C/48X)

Equipment for Base Machine

48 In. Shaft Driven convertible Mower Deck (48C/48X)
48 In. cutting width
Side discharge
Mulching capable
Material collection capable
Heavy duty 4 point mounting system
(4) Heavy duty rotateable gage wheels
40mm blade overlap
Formed heavy duty 10 Gauge steel
Formed edge around deck shell
Front anti-scalp roller
Shaft drive
Wash port
Greaseable deck spindles

CODE	ATTACHMENT IDENTIFIER	DESCRIPTION	SUGGESTED LIST PRICE USD ($)

Select One Code From Each Required Category

BASE MACHINE

F.O.B. Janesville, Wisconsin

9070M		48 In. Shaft Driven Convertible Mower Deck (48C/48X) *When mounting on Signature Series Tractors (X710, 730, X734, X738, X739, X750, X754, X758), also order BM24370 Draft Arms and Upstop Kit.*	1,300.00

DESTINATION

0202		United States and Canada	In Base Price
0230		Australia and New Zealand	Same Price
0195		Mexico	Same Price
0250		All Other Countries	Same Price

ATTACHMENTS FOR FIELD CONVERSION

		Mower Deck and Mower Deck Attachments:	
	BM24370	48C Draft arm kit, X700 Signature Series	63.13
	AM130907	Mower Deck Leveling Gauge	See Parts

54 In. Shaft Driven Convertible Mower Deck (54C/54X)

Equipment for Base Machine

54 In. Shaft Driven convertible Mower Deck (54C/54X)
54 In. cutting width
Side discharge
Mulching capable
Material collection capable
Heavy duty 4 point mounting system
(4) Heavy duty rotateable gage wheels
40mm blade overlap
Formed heavy duty 3.4 mm steel
Formed edge around deck shell
Front anti-scalp roller
Shaft drive
Wash port
Greaseable deck spindles

CODE	ATTACHMENT IDENTIFIER	DESCRIPTION	SUGGESTED LIST PRICE USD ($)
		Select One Code From Each Required Category	
		BASE MACHINE	
		F.O.B. Janesville, Wisconsin	
9071M		54 In. Shaft Driven Convertible Mower Deck (54C/54X)	1,300.00
		DESTINATION	
0202		United States and Canada	In Base Price
0230		Australia and New Zealand	Same Price
0195		Mexico	Same Price
0250		All Other Countries	Same Price
		ATTACHING PARTS/MOWER DECK LIFT	
1000		Attaching Parts for 2305, 2210 (Mechanical Mower Lift)	260.00
1001		Attaching Parts for 2305 (Independent Mower Lift) *Independent Lift is not Available on 2210.*	480.00
1010		Less Attaching Parts	In Base Price
		ATTACHMENTS FOR FIELD CONVERSION	
		Hydraulics:	
	LVB25630	Independent Lift Kit for 2305, 2025R, 2320 Tractors *Requires LVB25620 (Code 1001) Attaching Parts.* *Requires LVB25631 (Independent Lift Attaching Parts). Not Available for 2210 Tractors.*	298.53
	LVB25822	Loader/Mower Mechanical Diverter Valve Kit (2305, 2025R, 2320)	409.81
		Miscellaneous:	
	LVB25631	Attaching Parts for 2305 (Independent Mower Lift) *Requires LVB25630 (Independent Lift Kit). Not Available for 2210 Tractors.*	188.31
	LVB25419	Attaching Parts for 2305, 2210 (Mechanical Mower Lift)	298.53
		Mower Deck and Mower Deck Attachments:	
	BM24370	48C Draft arm kit, X700 Signature Series	63.13

54 In. Shaft Driven Convertible Mower Deck (54C/54X)

Continued

CODE	ATTACHMENT IDENTIFIER	DESCRIPTION	SUGGESTED LIST PRICE USD ($)
		ATTACHMENTS FOR FIELD CONVERSION Continued...	
	AM130907	Mower Deck Leveling Gauge	See Parts
	BM20827	Mulch Kit (54C/54D/54X)	212.93
	BM23648	Roller Striping Kit (X400/X500 HDGT, X700s) *Compatible with MY2004- (SN 040, 001-) 54C, 54X, 62X, and 60-In. 7-Iron Mowers used on X400/X500 HDGT and X700 Ultimate Tractors. 60HC Mowers used on X700 Signature Series Tractors. See Sales Manual for Additional Parts Requirements on MY2004-MY2007 (SN 040,001-100,000) 54C, 54X, 62C and 62X Decks.*	278.20
		Spanish North American Kit:	
	LVB26015	N American Spanish OM	19.26
	LVB26020	North American Spanish Labels	14.99

54HC Mower Deck X700 for Signature Series (Model Year 2013 and Later)

Equipment for Base Machine

54 HC Shaft Driven Mower Deck
54 In. Cutting Width
Side discharge
Drive over connect, w/optional auto connect drive shaft
(4) Front and rear adjustable and quick release gauge wheels
Memory Setting
Shaft drive
Anti-Scalp Front Roller
40mm blade overlap
Greasable Spindles
Front Lip Reinforcement
Formed heavy duty 8 Gauge steel
Mower Wash Port

CODE	ATTACHMENT IDENTIFIER	DESCRIPTION	SUGGESTED LIST PRICE USD ($)
		Select One Code From Each Required Category	
		BASE MACHINE	
		F.O.B. Janesville, Wisconsin	
9074M		54HC Mower Deck X700 for Signature Series (Model Year 2013 and Later)	1,700.00
		DESTINATION	
001A		United States and Canada	In Base Price
001C		Australia and New Zealand	Same Price
0195		Mexico	Same Price
001D		All Other Countries	Same Price
		PTO CONNECTION	
3425		Standard Connect	In Base Price
3426		Auto Connect	247.00
3490		Less Drive Shaft	-182.00
		ATTACHMENTS FOR FIELD CONVERSION	
		Mower Deck and Mower Deck Attachments:	
	BM23977	54HC Mulch Kit	227.91
	BM23894	Auto-connect kit, X700 Signature Series	492.20
	BM23903	Standard drive shaft with hanger, X700 Signature Series	208.66

60HC Mower Deck X700 for Signature Series (Model Year 2013 and Later)

Equipment for Base Machine

60HC Shaft Driven Mower Deck
60 In cutting width
Formed heavy duty 9 Gauge steel deck
(4) Front and Rear Adjustable and Quick Release Gauge Wheels with Memory Settings
Drive over connect, w/optional auto connect driveshaft
Shaft drive
40mm blade overlap
Greasable Spindles
Front lip Reinforcement
Mower Wash Port

CODE	ATTACHMENT IDENTIFIER	DESCRIPTION	SUGGESTED LIST PRICE USD ($)
		Select One Code From Each Required Category	
		BASE MACHINE	
		F.O.B. Janesville, Wisconsin	
9075M		60HC Mower Deck X700 for Signature Series (Model Year 2013 and Later)	2,100.00
		DESTINATION	
001A		United States and Canada	In Base Price
001C		Australia and New Zealand	Same Price
0195		Mexico	Same Price
001D		All Other Countries	Same Price
		PTO CONNECTION	
3425		Standard Connect	In Base Price
3426		Auto Connect	247.00
3490		Less Drive Shaft	-182.00
		ATTACHMENTS FOR FIELD CONVERSION	
		Mower Deck and Mower Deck Attachments:	
	BM23978	60HC Mulch Kit	238.61
	BM23894	Auto-connect kit, X700 Signature Series	492.20
	BM23648	Roller Striping Kit (X400/X500 HDGT, X700s)	278.20
	BM23903	Standard drive shaft with hanger, X700 Signature Series	208.66

60 In. 7-Iron Shaft Driven Mower Deck for X700, X720, X728, X740, X748 (60D)

Equipment for Base Machine

60 In. 7-Iron Shaft Driven Mower Deck for X700s (60D)
60 In. cutting width
Shaft driven
Formed heavy duty 4.6 mm steel
5/8 inch solid steel bar around edge of deck
Heat treated, 1 inch cold forged blade spindles
5.5 inch deep deck design
Mulch capable
Material collection capable
4 heavy duty rotateable gage wheels
Front anti-scalp roller
Greaseable blade spindles
Drive over installation
Wash port

CODE	ATTACHMENT IDENTIFIER	DESCRIPTION	SUGGESTED LIST PRICE USD ($)

Select One Code From Each Required Category

BASE MACHINE

F.O.B. Janesville, Wisconsin

9076M		60 In. 7-Iron Shaft Driven Mower Deck for X700, X720, X728, X740, X748 (60D) *Requires Model Year 2007 (Serial 020001-) X700 Series Tractor.* *Requires Turf Tires or BM22425 HDAP Tires. (BM22425 Tires are Factory Equipment on Serial M0X728A020102- and M0X748A020388-).* *Not Compatible with 4-Wheel Steer. See Sales Manual for Complete Compatibility Information for 3-Point Hitches, Cabs, SE Tractors and SE Tractor Serial Number Break.*	2,200.00

DESTINATION

001A		United States and Canada	In Base Price
001C		Australia and New Zealand	Same Price
0195		Mexico	Same Price
001D		All Other Countries	Same Price

ATTACHMENTS FOR FIELD CONVERSION

Mower Deck and Mower Deck Attachments:

	BM24370	48C Draft arm kit, X700 Signature Series	63.13
	AM130907	Mower Deck Leveling Gauge	See Parts
	TCB10953	Mulch Kit (60 In. 7-Iron, 7-Iron II and 7-Iron PRO)	319.93
	BM23648	Roller Striping Kit (X400/X500 HDGT, X700s) *Compatible with MY2004- (SN 040, 001-) 54C, 54X, 62X, and 60-In. 7-Iron Mowers used on X400/X500 HDGT and X700 Ultimate Tractors. 60HC Mowers used on X700 Signature Series Tractors. See Sales Manual for Additional Parts Requirements on MY2004-MY2007 (SN 040,001-100,000) 54C, 54X, 62C and 62X Decks.*	278.20

60 In. Shaft Driven Mower Deck (425, 445, 455)

Equipment for Base Machine

60 In. Shaft Driven Mower Deck for
425, 445, 455
60 In. cutting width
Shaft driven
Formed heavy duty 0.134 in. steel
Solid steel bar around edge of deck
Mulch capable
Material collection capable
4 heavy duty gauge wheels
Greaseable blade spindles

CODE	ATTACHMENT IDENTIFIER	DESCRIPTION	SUGGESTED LIST PRICE USD ($)
		Select One Code From Each Required Category	
		BASE MACHINE	
		F.O.B. Janesville, Wisconsin	
9080M		60 In. Shaft Driven Mower Deck (425, 445, 455)	2,300.00
		DESTINATION	
0202		United States and Canada	In Base Price
0230		Australia and New Zealand	Same Price
		ATTACHMENTS FOR FIELD CONVERSION	
		Mower Deck and Mower Deck Attachments:	
	AM130907	Mower Deck Leveling Gauge	See Parts

62 In. Shaft Driven Convertible Mower Deck (62C/62X)

Equipment for Base Machine

62 In. Shaft Driven convertible Mower Deck (62C/62X)
62 In. cutting width
Side discharge
Mulching capable
Material collection capable
Heavy duty 4 point mounting system
(4) Heavy duty rotateable gage wheels
40mm blade overlap
Formed heavy duty 3.4 mm steel
Formed edge around deck shell
Front anti-scalp roller
Shaft drive
Wash port
Greaseable deck spindles

CODE	ATTACHMENT IDENTIFIER	DESCRIPTION	SUGGESTED LIST PRICE USD ($)
		Select One Code From Each Required Category	
		BASE MACHINE	
		F.O.B. Janesville, Wisconsin	
9072M		62 In. Shaft Driven Convertible Mower Deck (62C/62X)	1,700.00
		DESTINATION	
0202		United States and Canada	In Base Price
0230		Australia and New Zealand	Same Price
0195		Mexico	Same Price
0250		All Other Countries	Same Price
		ATTACHING PARTS/MOWER DECK LIFT	
1000		Attaching Parts for 2305, 2210 (Mechanical Mower Lift)	260.00
1001		Attaching Parts for 2305 (Independent Mower Lift) *Independent Lift is not Available on 2210.*	480.00
1010		Less Attaching Parts	In Base Price
		ATTACHMENTS FOR FIELD CONVERSION	
		Hydraulics:	
	LVB25630	Independent Lift Kit for 2305, 2025R, 2320 Tractors *Requires LVB25620 (Code 1001) Attaching Parts.* *Requires LVB25631 (Independent Lift Attaching Parts). Not Available for 2210 Tractors.*	298.53
	LVB25822	Loader/Mower Mechanical Diverter Valve Kit (2305, 2025R, 2320)	409.81
		Miscellaneous:	
	LVB25631	Attaching Parts for 2305 (Independent Mower Lift) *Requires LVB25630 (Independent Lift Kit). Not Available for 2210 Tractors.*	188.31
	LVB25419	Attaching Parts for 2305, 2210 (Mechanical Mower Lift)	298.53
		Mower Deck and Mower Deck Attachments:	
	BM24370	48C Draft arm kit, X700 Signature Series	63.13

62 In. Shaft Driven Convertible Mower Deck (62C/62X)

Continued

CODE	ATTACHMENT IDENTIFIER	DESCRIPTION	SUGGESTED LIST PRICE USD ($)
		ATTACHMENTS FOR FIELD CONVERSION Continued...	
	AM130907	Mower Deck Leveling Gauge	See Parts
	BM21890	Mulch Kit (62C/62D/62X)	233.26
	BM23648	Roller Striping Kit (X400/X500 HDGT, X700s) *Compatible with MY2004- (SN 040, 001-) 54C, 54X, 62X, and 60-In. 7-Iron Mowers used on X400/X500 HDGT and X700 Ultimate Tractors. 60HC Mowers used on X700 Signature Series Tractors. See Sales Manual for Additional Parts Requirements on MY2004-MY2007 (SN 040,001-100,000) 54C, 54X, 62C and 62X Decks.*	278.20
		Spanish North American Kit:	
	LVB26015	N American Spanish OM	19.26
	LVB26020	North American Spanish Labels	14.99

Mulching Attachments

CODE	ATTACHMENT IDENTIFIER	DESCRIPTION	SUGGESTED LIST PRICE USD ($)
		ATTACHMENTS FOR FIELD CONVERSION	
		Mower Deck and Mower Deck Attachments:	
	BM17920	30 In. Tricycler Mulching Attachment *Fits 108, 130 and Riders.*	116.63
	BM20008	42 In. Mulching Attachment with Plug and Blades (LX/GT) *Fits 42 In. Convertible Mower (42C) Only.*	99.51
	BM20686	42 In. Rear Discharge Mulch Plug Attachment (LTR155, LTR166, LTR180)	174.41
	BM19321	46 In. Tricycler Mulching Attachment *Fits 46 In. Decks with Hinged Discharge, include Blades.*	169.06
	BM19918	48 In. Mulch Kit	232.19
	BG20304	54 In. Mulch Kit *Fits G110, 190C.*	222.56
	BM17869	54 In. Tricycler Mulching Kit	245.03
	BM17878	60 In. Tricycler Mulching Attachment	263.21
	BM20985	Leaf Bagging Kit (54C/54X Mower)	124.11
	BM20986	Leaf Bagging Kit (62C/62X Mower)	138.03
	BM21817	Mulch Kit (38 In. or 38X) *For 2 Spindle Mowers*	131.61
	BM21816	Mulch Kit (42 In. or 42X)	99.51
	BM20007	Mulch Kit (48C/48X)	157.29
	BM20827	Mulch Kit (54C/54D/54X)	212.93
	TCB10953	Mulch Kit (60 In. 7-Iron, 7-Iron II and 7-Iron PRO)	319.93
	BM21890	Mulch Kit (62C/62D/62X)	233.26

52 In. Quick-Hitch Rotary Broom (For X400/X500, HDGT's, X700's, 1023E, 1025R, 1026R, 2210, 2305, 2025R, 2032R, 2320, 2520, 2720, 4010, 4100, 4110, 4115 Tractors)

Equipment for Base Machine

```
52 In. Clearing Width
 "Straight"
48 In. Clearing Width "Angled"
Storage Stands
21 In. Diameter Polypropylene
 Brush
Gearbox with 3:1 Reduction
Heavy Duty No. 50 Chain Drive
(2) Adjustable Rear Mounting
 Caster Wheels
Brush Head Height Adjustment
Three Spare Driveshaft Shear
 Bolts "Mounted to Shell"
Less Front Quick-Hitch
Less Hydraulic Angling
Less Front PTO
Less Implement Drive Shaft
```

CODE	ATTACHMENT IDENTIFIER	DESCRIPTION	SUGGESTED LIST PRICE USD ($)

Select One Code From Each Required Category

BASE MACHINE

F.O.B. Davenport, Iowa

3880M	52 In. Quick-Hitch Rotary Broom (For X400/X500, HDGT's, X700's, 1023E, 1025R, 1026R, 2210, 2305, 2025R, 2032R, 2320, 2520, 2720, 4010, 4100, 4110, 4115 Tractors) *X700, X710, X465 and X475 Requires BM20761 Hydraulic Coupler Kit. See Sales Manual for Ballast Requirements.* *Not Compatible with BM17347, 425-455 Quick-Hitch Updated for Use on X400/X500 HDGT's and X700's with BM20979 Front-Hitch Angling Retro-Fit Kit.* *Compact Tractors Require Dual Selective Control Valve and Front Attaching Support Kit. See Sales Manual for Front Attaching Support Requirements.*	2,142.00

FRONT QUICK-HITCH

1000	Front Quick-Hitch and Hydraulic Lift (For X400/X500 HDGT's, X700's)	603.00
1001	Front Quick-Hitch and Hydraulic Lift (1023E, 1025R, 1026R)	688.00
1005	Front Quick-Hitch and Hydraulic Lift (2210, 2305)	641.00
1006	Front Quick-Hitch and Hydraulic Lift (2025R, 2032R, 2320, 2520, 2720, 4010, 4100, 4110, 4115)	688.00
1010	Less Front Quick-Hitch	In Base Price

HYDRAULIC ANGLING CYLINDER

2001	Hydraulic Angling (1023E, 1025R, 1026R)	187.00
2000	Hydraulic Angling (For X400/X500 HDGT's, X700's)	186.00
2005	Hydraulic Angling (2210, 2305)	187.00
2006	Hydraulic Angling (2025R, 2032R, 2320, 2520, 2720, 4010, 4100, 4110, 4115)	193.00
2010	Less Hydraulic Angling	In Base Price

52 In. Quick-Hitch Rotary Broom (For X400/X500, HDGT's, X700's, 1023E, 1025R, 1026R, 2210, 2305, 2025R, 2032R, 2320, 2520, 2720, 4010, 4100, 4110, 4115 Tractors)

Continued

CODE	ATTACHMENT IDENTIFIER	DESCRIPTION	SUGGESTED LIST PRICE USD ($)
		HYDRAULIC ANGLING CYLINDER Continued...	
		2000 RPM FRONT PTO KIT	
3000		2WD 2000 RPM Front PTO (X400 HDGT's, X700, X720, X724, X740, X744, X710, X730, X734, X750, X754)	231.00
3001		4WD 2000 RPM Front PTO (X500 HDGT's, X728, X729, X748, X749, X738, X739, X758) *For European RII Homologation Tractors, also order BM20978* *Front PTO Shield. Required to Meet Homologation Standards.* *Not Required for CE.*	245.00
3003		2000 RPM Front PTO (4100 and 4110)	254.00
3004		2000 RPM Front PTO (4010 and 4115)	254.00
3005		2000 RPM Front PTO (2210, 2305)	268.00
3006		2000 RPM Front PTO (2025R, 2320)	249.00
3007		2000 RPM Front PTO (2032R, 2520, 2720)	249.00
3009		2000 RPM Front PTO (1023E, 1025R, 1026R) *For tractors with RIO.Serial numbers starting:* *1023E - 1LV1023ETCH210309* *1026R - 1LV1026RHCH210658* *1026R Tractor Loader Backhoe - 1LV1026RECH210659* *Fits all 1025R Tractors*	322.00
3010		Less 2000 RPM Front PTO	In Base Price
		IMPLEMENT DRIVE SHAFT	
4000		Implement Drive Shaft (X400/X500 HDGT's, X700's, 1023E, 1025R, 1026R, 2210, 2305)	245.00
4001		European RII Implement Drive Shaft *Includes Shielding for CE, Supplemental CE Labels, FIGS OM.* *for X400/X500 HDGT's and X700's.*	290.00
4002		Implement Drive Shaft (2025R, 2032R, 2320, 2520, 2720, 4010, 4100, 4110, 4115)	255.00
4010		Less Implement Drive Shaft	In Base Price
		ATTACHMENTS FOR FIELD CONVERSION	
		Front Hitch:	
	LVB26047	Front Quick-Hitch and Hydraulic Lift (1023E, 1025R, 1026R)	788.59
	LVB24898	Front Quick-Hitch and Hydraulic Lift (2025R, 2032R, 2320 - 2720) *Fits also 4010, 4100, 4110 and 4115 Tractors for 47SB only.*	788.59
	BM20921	Front Quick-Hitch and Hydraulic Lift (2305) *Fits also 2210 Tractors (for 47SB only).*	736.16

52 In. Quick-Hitch Rotary Broom (For X400/X500, HDGT's, X700's, 1023E, 1025R, 1026R, 2210, 2305, 2025R, 2032R, 2320, 2520, 2720, 4010, 4100, 4110, 4115 Tractors)

Continued

CODE	ATTACHMENT IDENTIFIER	DESCRIPTION	SUGGESTED LIST PRICE USD ($)
		ATTACHMENTS FOR FIELD CONVERSION Continued...	
	BM19782	Front Quick-Hitch and Hydraulic Lift (X400/X500 HDGT's, X700's) *Also Order BM20837, Angling Cylinder to Hydraulically Angle the Front Hitch.*	692.29
		Front PTO:	
	BLV10051	2000 RPM Front PTO (1023E, 1025R, 1026R) *For tractors with RIO.Serial numbers starting:* *1023E - 1LV1023ETCH210309* *1026R - 1LV1026RHCH210658* *1026R Tractor Loader Backhoe - 1LV1026RECH210659* *Fits all 1025R Tractors*	369.16
	LVB24801	2000 RPM Front PTO (2025R, 2032R, 2520, 2720, 3120-3720)	285.69
	LVB24900	2000 RPM Front PTO (2025R, 2320)	285.69
	LVB25966	2000 RPM Front PTO (2210, 2305)	306.01
	BM18695	2000 RPM Front PTO (4100, 4110)	291.04
	LVB25305	2000 RPM Front PTO Kit (4010, 4115)	291.04
	BM24361	2000 RPM Mid-to-Front PTO Kit, 2WD (X400 HDGT's, X700's) *For Homologation Tractors, also Order BM20966 Front PTO Shield. Required to Meet Homologation Standards. Not Required for CE.*	298.53
	BM20991	2000 RPM Mid-to-Front PTO Kit, 2WD (X400 HDGT's, X700, X720, X724, X740, X744) *For European RII Homologation Tractors, also Order BM20966 Front PTO Shield. Required to Meet Homologation Standards. Not Required for CE.*	264.29
	BM24362	4WD 2000 RPM Front PTO (X500 HDGT's, X700's) *For European RII Homologation Tractors, also Order BM20978 Front PTO Shield. Required to Meet Homologation Standards. Not Required for CE.*	298.53
	BM22560	4WD 2000 RPM Front PTO (X500 HDGT's, X728, X729, X748, X749) *For European RII Homologation Tractors, also Order BM20978 Front PTO Shield. Required to Meet Homologation Standards. Not Required for CE.*	281.41
	BM20978	Front PTO Shield *For BM20382 (4WD) 2000 RPM Front PTO when used on X595 or X748. Required to Meet Homologation Standards. Not Required for CE.*	139.10
	BM20966	Front PTO Shield Kit *For BM20991 (2WD) 2000 RPM Front PTO when used on X495 or X740. Required to Meet Homologation Standards. Not Required for CE.*	97.37
		Hydraulics:	
	LVB26108	Hydraulic Angling (1023E, 1025R, 1026R)	215.07
	LVB24901	Hydraulic Angling (2025R, 2032R, 2320, 2520, 2720, 4010, 4100, 4110, 4115)	220.41
	BM20837	Hydraulic Angling (X400/X500 HDGT's, X700's) *For BM19782 Front Quick Hitch*	212.93

52 In. Quick-Hitch Rotary Broom (For X400/X500, HDGT's, X700's, 1023E, 1025R, 1026R, 2210, 2305, 2025R, 2032R, 2320, 2520, 2720, 4010, 4100, 4110, 4115 Tractors)

Continued

CODE	ATTACHMENT IDENTIFIER	DESCRIPTION	SUGGESTED LIST PRICE USD ($)
		ATTACHMENTS FOR FIELD CONVERSION Continued...	
	BM20922	Hydraulic Angling Kit (2210, 2305)	215.07
	BM20761	Hydraulic Coupler Kit *Required on X700, X465, X475 and 425 Tractors.*	54.57
		Miscellaneous:	
	BM20714	Click-N-Go Bracket (X400/X500 HDGT's, X700's)	112.36
	BM21777	Deflector Kit for 52 Broom	60.99
	LVB25302	Front Attaching Support Kit *For 2520, 2720, 4100, 4110, 4115 Tractors. See Sales Manual for Front Attaching Support Requirements.*	59.91
	LVB26046	Front Attaching Support Kit (1023E, 1025R, 1026R) *See Sales Manual for Front Attaching Support Requirements.*	67.41
	LVB24895	Front Attaching Support Kit (2025R, 2320) *See Sales Manual for Front Attaching Support Requirements.*	82.39
	LVB25396	Front Attaching Support Kit (2305) *Fits also 2210 Tractors (for 47SB only.) See Sales Manual for Front Attaching Support Requirements.*	59.91
	LVB24899	Front Hitch/Mid-Mount Mower Combo Bracket (2025R, 2032R, 2320-2720) *Compatible with 4115 Tractor also. Required for Tool Free Change Between 54D or 62D OnRamp Mid-Mount Mower and Quik-Tatch Front Hitch (2025R, 2032R, 2320, 2520, 2720, 4115).*	127.33
	BM20753	Front Light Kit *For X400/X500 HDGT and X700 Series Garden Tractors.*	207.59
	BM20836	Implement Drive Shaft (2025R, 2032R, 2320, 2520, 2720, 4010, 4100, 4110, 4115)	293.19
	BM21854	Implement Drive Shaft for Rotary Brooms (X400/X500 HDGT's, X700's, 425-455, 1023E, 1025R, 1026R, 2210, 2305)	281.41
	BM21853	Thatching Wheel Kit for 52 Broom	263.21
	TY25326	Tire Chains for 26x10.50-12 Turf Drive Tires *For X400 All Wheel Steer Tractors with Standard 26x10.5-12 In Tires.*	See Parts
	BM22725	Wheel Spacer Kit *For all Wheel Steer Tractors when Installing TY15956 Chains.*	157.29
		Seats / Wheels / Tires:	
	TY15958	Tire Chains (Pair) for 26x12-12 Tires	See Parts
		Weights:	
	BM20715	Ballast Box (Click-N-Go) (X400/X500 HDGT's, X700's) *Requires BM20714 Click-N-Go Bracket.*	283.56
	R66949	Quik-Tatch Weight, 42 Lb.	62.06
	BM20779	Rear Click-N-Go Weight Bracket (X400/X500 HDGT's, X700's) *Requires BM20714 Click-N-Go Bracket.*	156.21

52 In. Quick-Hitch Rotary Broom (For X400/X500, HDGT's, X700's, 1023E, 1025R, 1026R, 2210, 2305, 2025R, 2032R, 2320, 2520, 2720, 4010, 4100, 4110, 4115 Tractors)

Continued

60 In. Heavy-Duty Rotary Broom (For X400/X500 HDGT's, X700's, 1023E, 1025R, 1026R, 2305, 2025R, 2032R, 2320, 2520, 2720, 3120-3720, 2210, 4010 Thru 4400-4410 Tractors)

Equipment for Base Machine

57 In. Clearing Width "Straight"
50 In. Clearing Width "Angled"
Storage Stands
26 In. Diameter Polypropylene Brush
Gearbox with 3:1 Reduction
Chain and Sprocket Final Drive
(2) Adjustable Rear Mounted Caster Wheels
Broom Head Float
Four Spare Driveshaft Shear Bolts Two Sizes, "Mounted to Shell"
Less Mounting Frame
Less Front Quick-Hitch
Less Front PTO
Less Implement Drive Shaft

CODE	ATTACHMENT IDENTIFIER	DESCRIPTION	SUGGESTED LIST PRICE USD ($)
		Select One Code From Each Required Category	
		BASE MACHINE	
		F.O.B. Davenport, Iowa	
3790M		60 In. Heavy-Duty Rotary Broom (For X400/X500 HDGT's, X700's, 1023E, 1025R, 1026R, 2305, 2025R, 2032R, 2320, 2520, 2720, 3120-3720, 2210, 4010 Thru 4400-4410 Tractors) *X710, X465 and X475 Tractors Require BM20761 Hydraulic Coupler Kit.* *Not Compatible with BM17347, 400 Series Quick Hitch.* *Compact Tractors Require Dual Selective Control Valve and Mid PTO. Small Chassis Compact Tractors also Require Front Attaching Support Kit. See Sales Manual for Front Attaching Support Requirements. 3120-3720 Tractors with Mid-Mount Mowers for use with Front Three-Point Hitch with A-Frame require LVB25820 (AutoConnect decks) or LVB24810 (old 7-Iron decks).*	3,279.00
		MOUNTING FRAME	
1000		Mounting Frame (X400/X500 HDGT's, X700's, 1023E, 1025R, 1026R, 2210, 2305, 2025R, 2032R, 2320, 2520, 2720, 4010, 4100, 4110, 4115)	385.00
1001		Mounting Frame with Drive Shaft and Hydraulic Angling (4200-4400 and 4210-4410)	1,182.00
1002		Mounting Frame with Drive Shaft and Hydraulic Angling (3120-3720)	802.00
1010		Less Mounting Frame	In Base Price
		FRONT QUICK-HITCH / HYDRAULIC LIFT	
2000		Front Quick-Hitch and Hydraulic Lift (X400/X500 HDGT's, X700's)	603.00
2002		Front Quick-Hitch and Hydraulic Lift (4210-4410)	725.00
2003		Front Quick-Hitch and Hydraulic Lift (4200-4400) *Availability Limited to Dealer Inventory.*	725.00
2004		Front Quick-Hitch and Hydraulic Lift (2210, 2305)	641.00

60 In. Heavy-Duty Rotary Broom (For X400/X500 HDGT's, X700's, 1023E, 1025R, 1026R, 2305, 2025R, 2032R, 2320, 2520, 2720, 3120-3720, 2210, 4010 Thru 4400-4410 Tractors)

Continued

CODE	ATTACHMENT IDENTIFIER	DESCRIPTION	SUGGESTED LIST PRICE USD ($)
		FRONT QUICK-HITCH / HYDRAULIC LIFT Continued...	
2005		Front Quick-Hitch and Hydraulic Lift (2025R, 2032R, 2320, 2520, 2720, 4010, 4100, 4110, 4115)	688.00
2006		Front Three-Point Hitch with A-Frame Quick Attach System (3120-3720)	1,242.00
2007		Front Quick-Hitch and Hydraulic Lift (1023E, 1025R, 1026R)	688.00
2010		Less Front Quick-Hitch and Hydraulic Lift	In Base Price
		HYDRAULIC ANGLING	
		Hydraulic Angling for 3120-3720, 4200-4400 and 4210-4410 Tractors are Included in Code 1001/1002.	
3000		Hydraulic Angling (X400/X500 HDGT's, X700's)	186.00
3002		Hydraulic Angling Kit (2210, 2305)	187.00
3003		Hydraulic Angling (2025R, 2032R, 2320, 2520, 2720, 4010, 4100, 4110, 4115)	193.00
3004		Hydraulic Angling (1023E, 1025R, 1026R)	187.00
3010		Less Hydraulic Angling	In Base Price
		2000 RPM FRONT PTO KIT	
4000		2WD Front PTO (X400 HDGT's, X700, X720, X724, X740, X744, X710, X730, X734, X750, X754)	231.00
4001		4WD Front PTO (X500 HDGT's, X728, X729, X748, X749, X738, X739, X758)	245.00
4002		2000 RPM Front PTO Kit (4100, 4110)	254.00
4003		2000 RPM Front PTO Kit (4010, 4115)	254.00
4004		2000 RPM Front PTO Kit (4200-4400, 4210-4410)	214.00
4005		2000 RPM Front PTO Kit (2210, 2305)	268.00
4006		2000 RPM Front PTO Kit (2025R, 2320)	249.00
4007		2000 RPM Front PTO Kit (2032R, 2520, 2720, 3120-3720)	249.00
4008		2000 RPM Front PTO (1023E, 1026R) *For tractors without RIO.Serial numbers before:* *1023E - 1LV1023ETCH210309* *1026R - 1LV1026RHCH210658* *1026R Tractor Loader Backhoe - 1LV1026RECH210659*	268.00
4009		2000 RPM Front PTO (1023E, 1025R, 1026R) *For tractors with RIO.Serial numbers starting:* *1023E - 1LV1023ETCH210309* *1026R - 1LV1026RHCH210658* *1026R Tractor Loader Backhoe - 1LV1026RECH210659* *Fits all 1025R Tractors*	322.00

60 In. Heavy-Duty Rotary Broom (For X400/X500 HDGT's, X700's, 1023E, 1025R, 1026R, 2305, 2025R, 2032R, 2320, 2520, 2720, 3120-3720, 2210, 4010 Thru 4400-4410 Tractors)

Continued

CODE	ATTACHMENT IDENTIFIER	DESCRIPTION	SUGGESTED LIST PRICE USD ($)
		2000 RPM FRONT PTO KIT Continued...	
4010		Less 2000 RPM Front PTO Kit	In Base Price
		IMPLEMENT DRIVE SHAFT	
		Drive Shaft for 3120-3720, 4200-4400 and 4210-4410 Tractors are Included in Code 1001/1002.	
5001		Implement Drive Shaft (2025R, 2032R, 2320, 2520, 2720, 4010, 4100, 4110, 4115)	255.00
5003		Implement Drive Shaft (X400/X500 HDGT's, X700's, 1023E, 1025R, 1026R, 2210, 2305)	245.00
5010		Less Implement Drive Shaft	In Base Price
		ATTACHMENTS FOR FIELD CONVERSION	
		Front Hitch:	
	LVB24797	A-Frame Quick Attach System (3120-3720)	190.46
	LVB26047	Front Quick-Hitch and Hydraulic Lift (1023E, 1025R, 1026R)	788.59
	LVB24898	Front Quick-Hitch and Hydraulic Lift (2025R, 2032R, 2320 - 2720) *Fits also 4010, 4100, 4110 and 4115 Tractors for 47SB only.*	788.59
	BM20921	Front Quick-Hitch and Hydraulic Lift (2305) *Fits also 2210 Tractors (for 47SB only).*	736.16
	LVB25306	Front Quick-Hitch and Hydraulic Lift (4210-4410)	830.31
	BM19782	Front Quick-Hitch and Hydraulic Lift (X400/X500 HDGT's, X700's)	692.29
	LVB25878	Front Three-Point Hitch (3120-3720)	1,248.69
	LVB24815	Front Three-Point Hitch with A-Frame Quick Attach System (3120-3720) *Consists of (1) LVB24797, (1) LVB25759, (1) LVB25878.*	See Parts
		Front PTO:	
	BLV10051	2000 RPM Front PTO (1023E, 1025R, 1026R) *For tractors with RIO.Serial numbers starting:* *1023E - 1LV1023ETCH210309* *1026R - 1LV1026RHCH210658* *1026R Tractor Loader Backhoe - 1LV1026RECH210659* *Fits all 1025R Tractors*	369.16
	LVB24801	2000 RPM Front PTO (2025R, 2032R, 2520, 2720, 3120-3720)	285.69
	LVB24900	2000 RPM Front PTO (2025R, 2320)	285.69
	LVB25966	2000 RPM Front PTO (2210, 2305)	306.01
	BM18695	2000 RPM Front PTO (4100, 4110)	291.04
	BM19576	2000 RPM Front PTO (4200-4400, 4210-4410)	245.03
	LVB25305	2000 RPM Front PTO Kit (4010, 4115)	291.04

60 In. Heavy-Duty Rotary Broom (For X400/X500 HDGT's, X700's, 1023E, 1025R, 1026R, 2305, 2025R, 2032R, 2320, 2520, 2720, 3120-3720, 2210, 4010 Thru 4400-4410 Tractors)

Continued

CODE	ATTACHMENT IDENTIFIER	DESCRIPTION	SUGGESTED LIST PRICE USD ($)
		ATTACHMENTS FOR FIELD CONVERSION Continued...	
	BM24361	2000 RPM Mid-to-Front PTO Kit, 2WD (X400 HDGT's, X700's) *For Homologation Tractors, also Order BM20966 Front PTO Shield. Required to Meet Homologation Standards. Not Required for CE.*	298.53
	BM20991	2000 RPM Mid-to-Front PTO Kit, 2WD (X400 HDGT's, X700, X720, X724, X740, X744) *For European RII Homologation Tractors, also Order BM20966 Front PTO Shield. Required to Meet Homologation Standards. Not Required for CE.*	264.29
	BM24362	4WD 2000 RPM Front PTO (X500 HDGT's, X700's)	298.53
	BM22560	4WD 2000 RPM Front PTO (X500 HDGT's, X728, X729, X748, X749) *For European RII Homologation Tractors, also Order BM20978 Front PTO Shield. Required to Meet Homologation Standards. Not Required for CE.*	281.41
	LVB25759	Front PTO Bracket (3120-3720)	82.39
		Hydraulics:	
	LVB26108	Hydraulic Angling (1023E, 1025R, 1026R)	215.07
	LVB24901	Hydraulic Angling (2025R, 2032R, 2320, 2520, 2720, 4010, 4100, 4110, 4115)	220.41
	BM20837	Hydraulic Angling (X400/X500 HDGT's, X700's)	212.93
	BM20922	Hydraulic Angling Kit (2210, 2305)	215.07
	BM20761	Hydraulic Coupler Kit *Required on X700, X465, X475 and 425 Tractors.*	54.57
		Miscellaneous:	
	BM20706	19.25x12.5x6.5 Heavy Duty Wheel Kit	361.66
	BM20714	Click-N-Go Bracket (X400/X500 HDGT's, X700's)	112.36
	BM19805	Debris Deflector	408.74
	LVB25302	Front Attaching Support Kit *For 2520, 2720, 4100, 4110, 4115 Tractors. See Sales Manual for Front Attaching Support Requirements.*	59.91
	LVB26046	Front Attaching Support Kit (1023E, 1025R, 1026R) *See Sales Manual for Front Attaching Support Requirements.*	67.41
	LVB24895	Front Attaching Support Kit (2025R, 2320) *See Sales Manual for Front Attaching Support Requirements.*	82.39
	LVB25396	Front Attaching Support Kit (2305) *Fits also 2210 Tractors (for 47SB only.) See Sales Manual for Front Attaching Support Requirements.*	59.91
	LVB24899	Front Hitch/Mid-Mount Mower Combo Bracket (2025R, 2032R, 2320-2720) *Compatible with 4115 Tractor also. Required for Tool Free Change Between 54D or 62D OnRamp Mid-Mount Mower and Quik-Tatch Front Hitch (2025R, 2032R, 2320, 2520, 2720, 4115).*	127.33

60 In. Heavy-Duty Rotary Broom (For X400/X500 HDGT's, X700's, 1023E, 1025R, 1026R, 2305, 2025R, 2032R, 2320, 2520, 2720, 3120-3720, 2210, 4010 Thru 4400-4410 Tractors)

Continued

CODE	ATTACHMENT IDENTIFIER	DESCRIPTION	SUGGESTED LIST PRICE USD ($)
		ATTACHMENTS FOR FIELD CONVERSION Continued...	
	BM20753	Front Light Kit *For X400/X500 HDGT and X700 Series Garden Tractors.*	207.59
	LVB25820	Front Three-Point Hitch/Mid Mount Brackets *Required for use with LVB24815 Front Three-Point Hitch with A-Frame (3120-3720 Tractors Only)and AutoConenct Mowers.*	166.10
	LVB24810	Front Three-Point Hitch/Mid Mount Mower Draft Arms	228.99
	BM20836	Implement Drive Shaft (2025R, 2032R, 2320, 2520, 2720, 4010, 4100, 4110, 4115)	293.19
	LVB24956	Implement Drive Shaft (3120-3720)	169.06
	BM21854	Implement Drive Shaft for Rotary Brooms (X400/X500 HDGT's, X700's, 425-455, 1023E, 1025R, 1026R, 2210, 2305)	281.41
	BM20626	Mounting Frame (X400/X500 HDGT's, X700's, 1023E, 1025R, 1026R, 2210, 2305, 2025R, 2032R, 2320, 2520, 2720, 4010, 4100, 4110, 4115)	440.84
	LVB25879	Mounting Frame and Hydraulic Angling (3120-3720)	761.84
	BM19804	Mounting Frame with Drive Shaft and Hydraulic Angling (4200-4400, 4210-4410)	1,355.69
	AM128682	Wafers, Polypropylene Bristle (Pack of 16)	See Parts
	AM128683	Wafers, Steel Bristle (Pack of 16)	See Parts
		Weights:	
	BM17972	50 Lb. Cast Iron Wheel Weight (1)	128.40
	BM17976	50 Lb. Wheel Weight, Rear Plastic (1) with Mounting Hardware	66.34
	BM17973	72 Lb. Cast Iron Starter Wheel Weight (1)	181.90
	BM20715	Ballast Box (Click-N-Go) (X400/X500 HDGT's, X700's) *Requires BM20714 Click-N-Go Bracket.*	283.56
	BM18101	Mounting Hardware (1) for Attaching 72 Lb. Starter Weight and (2) 50 Lb. Cast Iron Weights on 26 In. Tire	28.89
	BM18089	Mounting Hardware (1) for Attaching 72 Lb. Starter Weight on 26x12-12 Tire	21.40
	BM17977	Mounting Hardware (1) for Attaching Two 50 lb. Weights to 23 In., 24 In. or 26 In. Tires *Two Wheel Steer only.*	20.33
	BM18094	Mounting Hardware (1), for Attaching 1 Wheel Weight. 4-Wheel Steer Only.	21.40
	R66949	Quik-Tatch Weight, 42 Lb.	62.06
	BM20779	Rear Click-N-Go Weight Bracket (X400/X500 HDGT's, X700's) *Requires BM20714 Click-N-Go Bracket.*	156.21

60 In. Heavy-Duty Rotary Broom (For X400/X500 HDGT's, X700's, 1023E, 1025R, 1026R, 2305, 2025R, 2032R, 2320, 2520, 2720, 3120-3720, 2210, 4010 Thru 4400-4410 Tractors)

Continued

CODE	ATTACHMENT IDENTIFIER	DESCRIPTION	SUGGESTED LIST PRICE USD ($)
		ATTACHMENTS FOR FIELD CONVERSION Continued...	
	BM17964	Wheel Weight (Cast Iron, Front, 30 Lb. 8 In.)	101.66
	BM17978	Wheel Weight Mounting Hardware (1) for Attaching Front Wheel Weight	10.70

47 In. Quick-Hitch Two-Stage Snow Blower (X400/X500 HDGT's, X700's, 425-455, 1023E, 1025R, 1026R, 2210, 2305, 2025R, 2032R, 2320, 2520, 2720, 4010, 4100, 4110, 4115 Tractors)

Equipment for Base Machine

Hydraulic Discharge Chute Rotation 100 Degrees Right and Left
47 In. Clearing Width "Straight"
15.5 In. Diameter Impeller
16 In. Diameter Auger
Shear Bolt Protection
Adjustable Spout Cap Deflector
Two-Stage Design
Wear Plates
Reversible and Replaceable Scraper Blade
Four Extra Shear Bolts
"Shell Mounted"
Hydraulic Chute Angling
Less Front Quick-Hitch
Less Front PTO
Less Implement Drive and Upstop

CODE	ATTACHMENT IDENTIFIER	DESCRIPTION	SUGGESTED LIST PRICE USD ($)
		Select One Code From Each Required Category	
		BASE MACHINE	
		F.O.B. Davenport, Iowa	
1473M		47 In. Quick-Hitch Two-Stage Snow Blower (X400/X500 HDGT's, X700's, 425-455, 1023E, 1025R, 1026R, 2210, 2305, 2025R, 2032R, 2320, 2520, 2720, 4010, 4100, 4110, 4115 Tractors) *BM20761 Hydraulic Coupler Kit Required on X700, X465, X475 and 425 Tractors.* *Compact Tractors Require Dual Selective Control Valve and Front Attaching Support Kit. See Sales Maual for Front Attaching Support Requirements.* *See Sales Manual for Ballast requirements.*	2,130.00
		FRONT QUICK-HITCH	
2000		Front Quick-Hitch and Hydraulic Lift (425, 445, 455)	625.00
2005		Front Quick-Hitch and Hydraulic Lift (For X400/X500 HDGT's, X700's)	603.00
2006		Front Quick-Hitch and Hydraulic Lift (2210, 2305)	641.00
2007		Front Qiuck-Hitch and Hydraulic Lift (2025R, 2032R, 2320, 2520, 2720, 4010, 4100, 4110, 4115)	688.00
2008		Front Quick-Hitch and Hydraulic Lift (1023E, 1025R, 1026R) *Also requires LVB26046, Front Attaching Support (1023E, 1025R, 1026R).*	688.00
2010		Less Front Quick-Hitch	In Base Price
		2000 RPM FRONT PTO KIT	
3000		2000 RPM Front PTO (425, 445, 455)	231.00
3003		2000 RPM Front PTO (4100, 4110)	254.00
3004		2WD 2000 RPM Front PTO (X400 HDGT's, X700, X720, X724, X740, X744, X710, X730, X734, X750, X754)	231.00
3005		4WD 2000 RPM Front PTO (X500 HDGT's, X728, X729, X748, X749, X738, X739,	245.00

47 In. Quick-Hitch Two-Stage Snow Blower (X400/X500 HDGT's, X700's, 425-455, 1023E, 1025R, 1026R, 2210, 2305, 2025R, 2032R, 2320, 2520, 2720, 4010, 4100, 4110, 4115 Tractors)

Continued

CODE	ATTACHMENT IDENTIFIER	DESCRIPTION	SUGGESTED LIST PRICE USD ($)
		2000 RPM FRONT PTO KIT Continued...	
		X758)	
3006		2000 RPM Front PTO (4010, 4115)	254.00
3007		2000 RPM Front PTO (2210, 2305)	268.00
3008		2000 RPM Front PTO Kit (2025R, 2320)	249.00
3009		2000 RPM Front PTO (2032R, 2520, 2720)	249.00
3010		Less Power Take Off	In Base Price
3012		2000 RPM Front PTO (1023E, 1025R, 1026R)	322.00
		IMPLEMENT DRIVE AND UPSTOP	
4000		Implement Drive and Upstop (425, 445, 455)	217.00
4003		Implement Drive and Upstop (For X400/X500 HDGT's, X700's)	217.00
4005		Implement Drive and Upstop (2025R, 2032R, 2320, 2520, 2720, 4010, 4100, 4110, 4115)	362.00
4006		Implement Drive and Upstop (2210, 2305)	413.00
4007		Implement Drive and Upstop (1023E, 1025R, 1026R)	413.00
4010		Less Implement Drive and Upstop	In Base Price
		ATTACHMENTS FOR FIELD CONVERSION	
		Front Hitch:	
	LVB26047	Front Quick-Hitch and Hydraulic Lift (1023E, 1025R, 1026R)	788.59
	LVB24898	Front Quick-Hitch and Hydraulic Lift (2025R, 2032R, 2320 - 2720) *Fits also 4010, 4100, 4110 and 4115 Tractors for 47SB only.*	788.59
	BM20921	Front Quick-Hitch and Hydraulic Lift (2305) *Fits also 2210 Tractors (for 47SB only).*	736.16
	BM17347	Front Quick-Hitch and Hydraulic Lift (415, 425, 445, 455)	715.83
	BM19782	Front Quick-Hitch and Hydraulic Lift (X400/X500 HDGT's, X700's)	692.29
		Front PTO:	
	BLV10051	2000 RPM Front PTO (1023E, 1025R, 1026R)	369.16
	LVB24801	2000 RPM Front PTO (2025R, 2032R, 2520, 2720, 3120-3720)	285.69
	LVB24900	2000 RPM Front PTO (2025R, 2320)	285.69
	LVB25966	2000 RPM Front PTO (2210, 2305)	306.01
	BM18695	2000 RPM Front PTO (4100, 4110)	291.04

47 In. Quick-Hitch Two-Stage Snow Blower (X400/X500 HDGT's, X700's, 425-455, 1023E, 1025R, 1026R, 2210, 2305, 2025R, 2032R, 2320, 2520, 2720, 4010, 4100, 4110, 4115 Tractors)

Continued

CODE	ATTACHMENT IDENTIFIER	DESCRIPTION	SUGGESTED LIST PRICE USD ($)
		ATTACHMENTS FOR FIELD CONVERSION Continued...	
	BM17330	2000 RPM Front PTO (415, 425, 445, 455) *European Region II 455 Requires BM17861.*	264.29
	LVB25305	2000 RPM Front PTO Kit (4010, 4115)	291.04
	BM24361	2000 RPM Mid-to-Front PTO Kit, 2WD (X400 HDGT's, X700's) *For Homologation Tractors, also Order BM20966 Front PTO Shield. Required to Meet Homologation Standards. Not Required for CE.*	298.53
	BM20991	2000 RPM Mid-to-Front PTO Kit, 2WD (X400 HDGT's, X700, X720, X724, X740, X744) *For Homologation Tractors, also Order BM20966 Front PTO Shield. Required to Meet Homologation Standards. Not Required for CE.*	264.29
	BM24362	4WD 2000 RPM Front PTO (X500 HDGT's, X700's) *For European RII Homologation Tractors, also Order BM20978 Front PTO Shield. Required to Meet Homologation Standards. Not Required for CE.*	298.53
	BM22560	4WD 2000 RPM Front PTO (X500 HDGT's, X728, X729, X748, X749) *For European RII Homologation Tractors, also Order BM20978 Front PTO Shield. Required to Meet Homologation Standards. Not Required for CE.*	281.41
		Hydraulics:	
	BM20761	Hydraulic Coupler Kit *Required on X700, X465, X475 and 425 Tractors.*	54.57
	BM20896	Hydraulic Retro Kit *Required to fit a Customer's 425, 445 and 455 Snow Blower or Snow Thrower on a New X400/X500 HDGT or X700 Series Tractor.*	28.89
		Miscellaneous:	
	BM20714	Click-N-Go Bracket (X400/X500 HDGT's, X700's)	112.36
	M88984	Drift Blade	See Parts
	LVB25302	Front Attaching Support Kit *For 2520, 2720, 4100, 4110, 4115 Tractors. See Sales Manual for Front Attaching Support Requirements.*	59.91
	LVB26046	Front Attaching Support Kit (1023E, 1025R, 1026R) *See Sales Manual for Front Attaching Support Requirements.*	67.41
	LVB24895	Front Attaching Support Kit (2025R, 2320) *2025R, 2320 Tractors with 200X or 200CX Hood Guard Require Attaching Support Kit.*	82.39
	LVB25396	Front Attaching Support Kit (2305) *Fits also 2210 Tractors (for 47SB only.) See Sales Manual for Front Attaching Support Requirements.*	59.91
	LVB24899	Front Hitch/Mid-Mount Mower Combo Bracket (2025R, 2032R, 2320-2720) *Compatible with 4115 Tractor also. Required for Tool Free Change Between 54D or 62D OnRamp Mid-Mount Mower and Quik-Tatch Front Hitch (2025R, 2032R, 2320, 2520, 2720, 4115).*	127.33

47 In. Quick-Hitch Two-Stage Snow Blower (X400/X500 HDGT's, X700's, 425-455, 1023E, 1025R, 1026R, 2210, 2305, 2025R, 2032R, 2320, 2520, 2720, 4010, 4100, 4110, 4115 Tractors)

Continued

CODE	ATTACHMENT IDENTIFIER	DESCRIPTION	SUGGESTED LIST PRICE USD ($)
		ATTACHMENTS FOR FIELD CONVERSION Continued...	
	BM20753	Front Light Kit *For X400/X500 HDGT and X700 Series Garden Tractors.*	207.59
	AM119321	Heavy Duty Skid Shoe (1) *For Snow Blowers Serial Numbered up to 060000.*	See Parts
	LVB26135	Implement Drive and Upstop (1023E, 1025R, 1026R, 2210, 2305)	475.09
	LVB24902	Implement Drive and Upstop (2025R, 2032R, 2320, 2520, 2720) *Fits also 4010, 4100, 4110 and 4115 Tractors (for 47SB only).*	415.16
	BM20871	Implement Drive and Upstop (425, 445, 455, F900's)	249.31
	BM23236	Implement Drive and Upstop (X400/X500 HDGT's, X700's)	249.31
	AM128337	Left-Side Skid Shoe Plate and Hardware	See Parts
	BM20960	Remote Spout Cap Control Kit *For 425-455, 318, 322, 332, 420, 430, X400/X500 HDGT's, F900's, X700's, 2210, 2305, 4010, 4100, 4110, 4115 Tractors. See Sales Manual for Required Attaching Parts.*	124.11
	LVB24958	Remote Spout Cap Control Kit *For 2025R, 2032R, 2320, 2520, 2720 Tractors. See Sales Manual for Required Attaching Parts.*	146.59
	LVB26213	Remote Spout Cap Control Kit *For 1023E, 1025R and 1026R Tractors. See Sales Manual for Required Attaching Parts.*	197.96
	AM128336	Right-Side Skid Shoe Plate and Hardware	See Parts
	M157831	Skid shoe, Plastic (1) *For 44-, 47-, and 54-in. Snow Blowers. Two required.*	See Parts
	TY15956	Tire Chains (Pair) for 23x10.50-12 In. Drive Tires *All Wheel Steer Tractors with Standard 23x10.50-12 In. Tires Require BM18021 Wheel Spacer Kit to Provide Clearance Between Tire Chains and Steering Linkage.*	See Parts
	TY15845	Tire Chains (Pair) for 23x10.50-12 In. Rear Tires (318, 322, 332)	See Parts
	TY15841	Tire Chains (Pair) for 23x8.50-12 In. Drive Tires *Compatible on all Wheel Steer Tractors with BM17332 Tires.*	See Parts
	BM22725	Wheel Spacer Kit *For all Wheel Steer Tractors when Installing TY15956 Chains.*	157.29
		Seats / Wheels / Tires:	
	TY15958	Tire Chains (Pair) for 26x12-12 Tires	See Parts
		Weights:	
	BM20715	Ballast Box (Click-N-Go) (X400/X500 HDGT's, X700's) *Requires BM20714 Click-N-Go Bracket.*	283.56
	R66949	Quik-Tatch Weight, 42 Lb.	62.06

47 In. Quick-Hitch Two-Stage Snow Blower (X400/X500 HDGT's, X700's, 425-455, 1023E, 1025R, 1026R, 2210, 2305, 2025R, 2032R, 2320, 2520, 2720, 4010, 4100, 4110, 4115 Tractors)

Continued

CODE	ATTACHMENT IDENTIFIER	DESCRIPTION	SUGGESTED LIST PRICE USD ($)
		ATTACHMENTS FOR FIELD CONVERSION Continued...	
	BM20779	Rear Click-N-Go Weight Bracket (X400/X500 HDGT's, X700's) *Requires BM20714 Click-N-Go Bracket.*	156.21

54 In. Quick-Hitch Two-Stage Snow Blower (X400/X500 HDGT's, X700's, 1023E, 1025R, 1026R, 2305, 2025R, 2032R, 2320-2720 Tractors)

Equipment for Base Machine

```
Hydraulic Discharge Chute          Wear Plates
Rotation 100 Degrees Right         Reversible and Replaceable
 and Left                           Scraper Blade
54 In. Clearing Width "Straight"   Four Extra Shear Bolts
15 In. Diameter Impeller            "Shell Mounted"
16 In. Diameter Auger              Hydraulic Chute Angling
Shear Bolt Protection              Less Front Quick-Hitch
Adjustable Spout Cap Deflector     Less Front PTO
Two-Stage Design                   Less Implement Drive and Upstop
```

CODE	ATTACHMENT IDENTIFIER	DESCRIPTION	SUGGESTED LIST PRICE USD ($)
		Select One Code From Each Required Category	
		BASE MACHINE	
		F.O.B. Davenport, Iowa	
02C1M		54 In. Quick-Hitch Two-Stage Snow Blower (X400/X500 HDGT's, X700's, 1023E, 1025R, 1026R, 2305, 2025R, 2032R, 2320-2720 Tractors) *BM20761 Hydraulic Coupler Kit Required on X700 Tractors.* *Compact Tractors Require Dual Selective Control Valve and Front Attaching Support Kit. See Sales Maual for Front Attaching Support Requirements.* *See Sales Manual for Ballast requirements.*	2,550.00
		FRONT QUICK-HITCH	
2005		Front Quick-Hitch and Hydraulic Lift (For X400/X500 HDGT's, X700's)	603.00
2006		Front Quick-Hitch and Hydraulic Lift (2305)	641.00
2007		Front Quick-Hitch and Hydraulic Lift (2025R, 2032R, 2320-2720)	688.00
2008		Front Quick-Hitch and Hydraulic Lift (1023E, 1025R, 1026R) *Also requires LVB26046, Front Attaching Support (1023E, 1025R, 1026R).*	688.00
2010		Less Front Quick-Hitch	In Base Price
		2000 RPM FRONT PTO KIT	
3004		2WD 2000 RPM Front PTO (X400 HDGT's, X700, X720, X724, X740, X744, X710, X730, X734, X750, X754)	231.00
3005		4WD 2000 RPM Front PTO (X500 HDGT's, X728, X729, X748, X749, X738, X739, X758)	245.00
3007		2000 RPM Front PTO (2305)	268.00
3008		2000 RPM Front PTO Kit (2025R, 2320)	249.00
3009		2000 RPM Front PTO (2032R, 2520, 2720)	249.00
3010		Less Power Take Off	In Base Price

54 In. Quick-Hitch Two-Stage Snow Blower (X400/X500 HDGT's, X700's, 1023E, 1025R, 1026R, 2305, 2025R, 2032R, 2320-2720 Tractors)

Continued

CODE	ATTACHMENT IDENTIFIER	DESCRIPTION	SUGGESTED LIST PRICE USD ($)
		2000 RPM FRONT PTO KIT Continued...	
3012		2000 RPM Front PTO (1023E, 1025R, 1026R)	322.00
		IMPLEMENT DRIVE AND UPSTOP	
4003		Implement Drive and Upstop (For X400/X500 HDGT's, X700's)	217.00
4005		Implement Drive and Upstop (2025R, 2032R, 2320-2720)	282.00
4006		Implement Drive and Upstop (2305)	413.00
4007		Implement Drive and Upstop (1023E, 1025R, 1026R)	413.00
4010		Less Implement Drive and Upstop	In Base Price
		ATTACHMENTS FOR FIELD CONVERSION	
		Front Hitch:	
	LVB26047	Front Quick-Hitch and Hydraulic Lift (1023E, 1025R, 1026R)	788.59
	LVB24898	Front Quick-Hitch and Hydraulic Lift (2025R, 2032R, 2320 - 2720)	788.59
	BM20921	Front Quick-Hitch and Hydraulic Lift (2305)	736.16
	BM19782	Front Quick-Hitch and Hydraulic Lift (X400/X500 HDGT's, X700's)	692.29
		Front PTO:	
	BLV10051	2000 RPM Front PTO (1023E, 1025R, 1026R)	369.16
	LVB24801	2000 RPM Front PTO (2025R, 2032R, 2520, 2720, 3120-3720)	285.69
	LVB24900	2000 RPM Front PTO (2025R, 2320)	285.69
	LVB25966	2000 RPM Front PTO (2210, 2305)	306.01
	BM24361	2000 RPM Mid-to-Front PTO Kit, 2WD (X400 HDGT's, X700's) *For Homologation Tractors, also Order BM20966 Front PTO Shield. Required to Meet Homologation Standards. Not Required for CE.*	298.53
	BM20991	2000 RPM Mid-to-Front PTO Kit, 2WD (X400 HDGT's, X700, X720, X724, X740, X744) *For Homologation Tractors, also Order BM20966 Front PTO Shield. Required to Meet Homologation Standards. Not Required for CE.*	264.29
	BM24362	4WD 2000 RPM Front PTO (X500 HDGT's, X700's) *For European RII Homologation Tractors, also Order BM20978 Front PTO Shield. Required to Meet Homologation Standards. Not Required for CE.*	298.53
	BM22560	4WD 2000 RPM Front PTO (X500 HDGT's, X728, X729, X748, X749) *For European RII Homologation Tractors, also Order BM20978 Front PTO Shield. Required to Meet Homologation Standards. Not Required for CE.*	281.41

54 In. Quick-Hitch Two-Stage Snow Blower (X400/X500 HDGT's, X700's, 1023E, 1025R, 1026R, 2305, 2025R, 2032R, 2320-2720 Tractors)

Continued

CODE	ATTACHMENT IDENTIFIER	DESCRIPTION	SUGGESTED LIST PRICE USD ($)
		ATTACHMENTS FOR FIELD CONVERSION Continued...	
		Hydraulics:	
	BM20761	Hydraulic Coupler Kit *Required on X700, X465, X475 and 425 Tractors.*	54.57
		Miscellaneous:	
	BM20714	Click-N-Go Bracket (X400/X500 HDGT's, X700's)	112.36
	M88984	Drift Blade	See Parts
	LVB25302	Front Attaching Support Kit *For 2520, 2720 Tractors. See Sales Manual for Front Attaching Support Requirements.*	59.91
	LVB26046	Front Attaching Support Kit (1023E, 1025R, 1026R) *See Sales Manual for Front Attaching Support Requirements.*	67.41
	LVB24895	Front Attaching Support Kit (2025R, 2320) *2025R, 2320 Tractors with 200X or 200CX Hood Guard Require Attaching Support Kit.*	82.39
	LVB25396	Front Attaching Support Kit (2305) *Fits also 2210 Tractors (for 47SB only.) See Sales Manual for Front Attaching Support Requirements.*	59.91
	LVB24899	Front Hitch/Mid-Mount Mower Combo Bracket (2025R, 2032R, 2320-2720) *Compatible with 4115 Tractor also. Required for Tool Free Change Between 54D or 62D OnRamp Mid-Mount Mower and Quik-Tatch Front Hitch (2025R, 2032R, 2320, 2520, 2720, 4115).*	127.33
	BM20753	Front Light Kit *For X400/X500 HDGT and X700 Series Garden Tractors.*	207.59
	LVB26135	Implement Drive and Upstop (1023E, 1025R, 1026R, 2210, 2305)	475.09
	BM23238	Implement Drive and Upstop (2025R, 2032R, 2320, 2520, 2720)	324.21
	BM23236	Implement Drive and Upstop (X400/X500 HDGT's, X700's)	249.31
	BM20960	Remote Spout Cap Control Kit *For 425-455, 318, 322, 332, 420, 430, X400/X500 HDGT's, F900's, X700's, 2210, 2305, 4010, 4100, 4110, 4115 Tractors. See Sales Manual for Required Attaching Parts.*	124.11
	LVB24958	Remote Spout Cap Control Kit *For 2025R, 2032R, 2320, 2520, 2720 Tractors. See Sales Manual for Required Attaching Parts.*	146.59
	LVB26213	Remote Spout Cap Control Kit *For 1023E, 1025R and 1026R Tractors. See Sales Manual for Required Attaching Parts.*	197.96
	M157831	Skid shoe, Plastic (1) *For 44-, 47-, and 54-in. Snow Blowers. Two required.*	See Parts
	BM22725	Wheel Spacer Kit *For all Wheel Steer Tractors when Installing TY15956 Chains.*	157.29
		Seats / Wheels / Tires:	
	TY15958	Tire Chains (Pair) for 26x12-12 Tires	See Parts

54 In. Quick-Hitch Two-Stage Snow Blower (X400/X500 HDGT's, X700's, 1023E, 1025R, 1026R, 2305, 2025R, 2032R, 2320-2720 Tractors)

Continued

CODE	ATTACHMENT IDENTIFIER	DESCRIPTION	SUGGESTED LIST PRICE USD ($)
		ATTACHMENTS FOR FIELD CONVERSION Continued...	
		Weights:	
	BM20715	Ballast Box (Click-N-Go) (X400/X500 HDGT's, X700's) *Requires BM20714 Click-N-Go Bracket.*	283.56
	R66949	Quik-Tatch Weight, 42 Lb.	62.06
	BM20779	Rear Click-N-Go Weight Bracket (X400/X500 HDGT's, X700's) *Requires BM20714 Click-N-Go Bracket.*	156.21

42 In. Snow Thrower
(For G100, Scotts/Sabre Yard Tractors, LX, GT, GX, 325, 335, 345, 355D, 240-285, 320 Tractors)

Equipment for Base Machine

42 In. (107 cm) Clearing Width
Easy-On, Easy-Off Mounting
12 In. Diameter Auger
Reversible and Replaceable Cutting Blade
216 Degree Spout Rotation
Over-Center Belt Tensioner
Sealed, Anti-Friction Ball Bearings
Remote Spout Cap Control
Large, Adjustable Skid Shoes

CODE	ATTACHMENT IDENTIFIER	DESCRIPTION	SUGGESTED LIST PRICE USD ($)

Select One Code From Each Required Category

BASE MACHINE

F.O.B. Davenport, Iowa

3252M	42 In. Snow Thrower (For G100, Scotts/Sabre Yard Tractors, LX, GT, GX, 325, 335, 345, 355D, 240-285, 320 Tractors) *Operator's Manual is Packaged with Attaching Parts Bundle.* *100 Lbs. of Ballast is Recommended on Rear of Tractor.*	1,655.00

LIFT KIT

1000	Front Implement Lift Kit (G100, Scotts/Sabre Yard Tractors, LX, GT with Hand Lift) *G100, Scotts/Sabre Yard Tractors and GT242, GT262, GT275 require two M132142 Brackets, four 19M7285 Bolts, and four 14M7466 Nuts. LX277 AWS requires two M136814 Brackets, four 19M7285 Bolts and four 14M7466 Nuts. LX172-LX188 require BM19407 Mounting Parts.*	93.00
1001	Front Implement Lift Kit (325, 335, 345, 355D)	76.00
1002	Front Implement Lift Kit (240-285, 320) *When Installing Front Implement Lift Kit on the 240 with 38 In. Mower 1-M71193, Right and 1-M71194, Left Mower Lift Stops, 4-03M7190, Carriage Bolts and 4-14M7296, Flange Head Nuts may be Required.*	105.00
1003	Front Implement Lift Kit (GX325, GX335, GX345, GX355)	76.00
1004	Front Implement Lift Kit (LX, GT, GX255 with Foot Lift) *LX280 AWS Requires (2) M136814 Brackets, (4) 19M7285 Bolts and four 14M7466 Nuts (1) M155668 Bracket, (1) 19M7786 M10x30 Bolt, and (1) 14M7400 M10 Locknut.*	109.00
1010	Less Front Implement Lift Kit	In Base Price

ATTACHING PARTS

2001	Attaching Parts (240-285, 320, 325, 335, 345, 355D, GX325, GX335, GX345, GX355) *240-285 and 320 Tractors Require one M137636 Bracket, two 03M7190 Bolts, two 19M7866 Bolts and six 24M7053 Washers.*	56.00
2003	Attaching Parts (LX, GT, GX255)	73.00

42 In. Snow Thrower (For G100, Scotts/Sabre Yard Tractors, LX, GT, GX, 325, 335, 345, 355D, 240-285, 320 Tractors)

Continued

CODE	ATTACHMENT IDENTIFIER	DESCRIPTION	SUGGESTED LIST PRICE USD ($)
		ATTACHING PARTS Continued...	
2004		Attaching Parts (G100 and Scotts/Sabre Yard Tractors)	73.00
2010		Less Attaching Parts	In Base Price
		ATTACHMENTS FOR FIELD CONVERSION	
		Miscellaneous:	
	BM19797	Adapter Kit for LX277 AWS and LX280 AWS *Required to Install BM17296 Rear Weight Mounting Kit on LX277 AWS and LX280 AWS*	31.03
	BM19216	Attaching Parts (240-285, 320, 325, 335, 345, 355D, GX300 Series) *240-285 and 320 Tractors Require one M137636 Bracket, two 03M7190 Bolts, two 19M7866 Bolts and six 24M7053 Washers.*	60.99
	BM21339	Attaching Parts (LX, GT, GX255)	81.31
	M88984	Drift Blade	See Parts
	BM19867	Electric Spout Rotation Kit	286.76
	BM16733	Front Implement Lift Kit (240-285,320) *When Installing Front Implement Lift Kit on the 240 with 38 In. Mower 1-M71193 Right and 1-M71194 Left Mower Lift Stops, 4-03M7190 Carriage Bolts and 4-14M7296 Flange Head Nuts may be Required.*	119.84
	BM19996	Front Implement Lift Kit (325, 335, 345, 355D)	86.67
	BM20781	Front Implement Lift Kit (GX325, GX335, GX345, GX355)	86.67
	BM21337	Front Implement Lift Kit (LX, GT, GX255 with Foot Lift) *(LX, GT and GX255 with Foot Lift)* *LX280 AWS Requires (2) M136814 Brackets, (4) 19M7285 Bolts and four 14M7466 Nuts (1) M155668 Bracket, (1) 19M7786 M10x30 Bolt, and (1) 14M7400 M10 Locknut.*	124.11
	BM18977	Front Implement Lift Kit (LX/GT with Hand Lift) *G100, Scotts/Sabre Yard Tractors and GT242, GT262, GT275 require two M132142 Brackets, four 19M7285 Bolts and four 14M7466 Nuts. LX277 AWS requires two M136814 Brackets, four 19M7285 Bolts and four 14M7466 Nuts. LX172- LX188 require BM19407 Mounting Parts.*	107.00
	BM19407	Mounting Parts (LX172-LX188)	158.36
	AM122263	Skid Shoe, Heavy Duty Left Hand (1)	See Parts
	AM122264	Skid Shoe, Heavy Duty Right Hand (1)	See Parts
	TY15956	Tire Chains (Pair) for 23x10.50-12 In. Drive Tires	See Parts
	TY24327	Tire Chains for 22x11-10 In. Turf Tires	See Parts
	M142891	Wear Plate	See Parts
		Seats / Wheels / Tires:	

42 In. Snow Thrower
(For G100, Scotts/Sabre Yard Tractors, LX, GT, GX, 325, 335, 345, 355D, 240-285, 320 Tractors)

Continued

CODE	ATTACHMENT IDENTIFIER	DESCRIPTION	SUGGESTED LIST PRICE USD ($)
		ATTACHMENTS FOR FIELD CONVERSION Continued...	
	TY16200	Tire Chains (Pair) for 20x10-8, 20x10-10	See Parts
	TY24328	Tire Chains (Pair) for 24x12.00-12 In. Drive Tires	See Parts
		Weights:	
	BM17976	50 Lb. Wheel Weight, Rear Plastic (1) with Mounting Hardware *Not Compatible with LX Tractors.*	66.34
	R66949	Quik-Tatch Weight, 42 Lb.	62.06
	BM17296	Rear Weight Mounting Kit (LX Series) *Not for LX280 or LX289* *For (2) R66949 Weights. LX277 AWS and LX280 AWS also Requires BM19797 Adapter Kit.*	81.31

44 In. Snow Blower (For 100 Series)

Equipment for Base Machine

42 In. (107 cm) Clearing Width
Easy-On, Easy-Off Mounting
12 In. Diameter Auger
Reversible and Replaceable Cutting Blade
216 Degree Spout Rotation
Over-Center Belt Tensioner
Sealed, Anti-Friction Ball Bearings
Remote Spout Cap Control
Large, Adjustable Skid Shoes

CODE	ATTACHMENT IDENTIFIER	DESCRIPTION	SUGGESTED LIST PRICE USD ($)
		Select One Code From Each Required Category	
		BASE MACHINE	
		F.O.B. Davenport, Iowa	
7005M		44 In. Snow Blower (For 100 Series) *Rear weights and tire chains are available for additional traction.*	1,399.00
		ATTACHMENTS FOR FIELD CONVERSION	
		Miscellaneous:	
	M88984	Drift Blade	See Parts
	TY15959	Rear Tire Chain Kit (Pair) for 20x8-8	See Parts
	TY25229	Rear Tire Chain Kit (Pair) for 22x9.5-12	See Parts
	AM122263	Skid Shoe, Heavy Duty Left Hand (1) *For Snow Blower.*	See Parts
	AM122264	Skid Shoe, Heavy Duty Right Hand (1) *For Snow Blower.*	See Parts
		Seats / Wheels / Tires:	
	TY16200	Tire Chains (Pair) for 20x10-8, 20x10-10	See Parts
		Weights:	
	R66949	Quik-Tatch Weight, 42 Lb. *Two Required.*	62.06
	BG20029	Quik-Tatch Weight, 42 Lb. (Boxed) *Two Required.*	63.13

Front Mounted Thatchers

CODE	ATTACHMENT IDENTIFIER	DESCRIPTION	SUGGESTED LIST PRICE USD ($)
		ATTACHMENTS FOR FIELD CONVERSION	
		FRONT MOUNTED THATCHERS:	
	TY13056	38 In. Front Thatcher (Center) *Requires Mounting Frame.*	216.14
	TY13036	8 In. Front Thatcher (Extension)	53.50
		Mounting Frames:	
	BM17348	Thatcher Mounting Frame *For 425, 445, 455 Tractors with Mid-Mount Mower.*	155.16
	BM20853	Thatcher Mounting Frame *For X400/X500 HDGT and X700 Ultimate Tractors.*	209.71

42 In. Hydraulic Tiller (for X400/X500 HDGT and X700 Series Garden Tractors)

Equipment for Base Machine

42 In. Tilling Width
Shaft Drive with "Lock-Back Collar" - X400/X500 HDGT'S, X700's
2000 RPM PTO Input Speed
Category "1" 3-Point Hitch Mounting, X400/X500 HDGT'S, X700's
Leveling Blade
14 In. Cutting Circle
1-6 In. Tilling Depth
28 High-Carbon, Heat Treated Steel Tines
Optional Six Position Adjustable Skid Shoes
5 Gallon Hydraulic Oil Reservoir
Adjustable Rear Hinged Cover Door
200 RPM Tine Rotation Speed at Full Throttle
Standard or Counter-Rotating Tines

CODE	ATTACHMENT IDENTIFIER	DESCRIPTION	SUGGESTED LIST PRICE USD ($)
		Select One Code From Each Required Category	
		BASE MACHINE	
4392M		42 In. Hydraulic Tiller (for X400/X500 HDGT and X700 Series Garden Tractors) *If no Mower Deck, then AM133971 is Required.* *This version of the 42 Hydraulic Tiller is used for X700s and non-current X400/X500 HDGTs. See the "attachments for field conversion" for the version used on X500 M-T Tractor.* *Bar Tires are Recommended on 2WD Tractors and HDAP Tires Recommended on 4WD Tractors for Tilling Applications. Chains not Recommended for Tilling.* *160 Lbs. of front ballast is required for X400/X500 HDGT and X700 Series Garden Tractors.* *X400/X500 HDGT and X700 Series Garden Tractors must be equipped with 3-Point Hitch.*	2,449.00
		ATTACHMENTS FOR FIELD CONVERSION	
		Miscellaneous:	
	BM19406	Adjustable Skid Shoes *For 42 In. Hydraulic Tiller*	220.41
	AM133971	Shaft, Half and Joint Assembly (X400/X500 HDGT's, X700's)	See Parts
		Weights:	
	R66949	Quik-Tatch Weight, 42 Lb.	62.06

647 Rotary Tiller

Equipment for Base Machine

48 In. Tilling Width
540 PTO Shaft Drive with "Quick Lock" Collar
Pre-set Slip Clutch
15-35 PTO HP Rated Main Gearbox
Breather on Gearbox and Chain Case
Dipstick on Gearbox
Sight Glass on Chain Case
7 In. Tilling Depth
14 In. Rotor Diameter
6 Hybrid Tines per Flange
6 Flanges - Total of 36 Tines
4 Position Adjustable Skidshoes
ASA 60 Roller Chain
Parking Stands
Adjustable Rear Hinged Cover Door
Center Mounted Cat 1 Hitch
iMatch & Alpha Compatible 3-Point Hitch
Drive Shaft (CUT Tractors)

CODE	ATTACHMENT IDENTIFIER	DESCRIPTION	SUGGESTED LIST PRICE USD ($)
		Select One Code From Each Required Category	
		BASE MACHINE	
		F.O.B. Davenport, Iowa	
0205LV		647 Rotary Tiller *For X400/X500 HDGT, X700 Series, 3005, 4005, 1023E, 1025R, 1026R, 3032E, 3038E, 2210, 4010, 4100, 4110, 4115, 2305, 2025R, 2032R, 2320-2720, 3203, 3120-3720, 4105 Tractors. X400/X500HDGT and X700 Series Tractors Must be Equipped with 540 RPM Rear PTO Drive and Category 1 3-Point Hitch. Front Ballast is Required, See Sales Manual for Specific Requirements. If Ordering Tiller for Use with iMatch AutoHitch, Order Code 1010 (Less Drive Shaft) as the AutoHitch Implement Side Components are Used in Place of the Tiller Drive Shaft.*	2,395.00
		DRIVE SHAFT	
1000		Drive Shaft for Compact Utility Tractors	In Base Price
1001		Drive Shaft for X400/X500 HDGT and X700 Series Tractors	30.00
1010		Less Drive Shaft	-310.00
		BRACKETS	
2000		Brackets for Compact Utility Tractors	In Base Price
2001		Brackets for X400/X500 HDGT and X700 Series Tractors	Same Price
2010		Less Brackets	-138.00
		ATTACHMENTS - ORDER AS DESIRED	
		Spanish North American Kit:	
9430		Spanish North American Operator's Manual and Decal Kit	No Charge
		ATTACHMENTS FOR FIELD CONVERSION	
		Miscellaneous:	
	BM21914	540 RPM Rear PTO Drive (X400/X500 HDGTs, X700's -June 2010 production) *Also order AM120840 Module for MY2005 and older X400 or X500 HDGTs.*	960.86

647 Rotary Tiller
Continued

CODE	ATTACHMENT IDENTIFIER	DESCRIPTION	SUGGESTED LIST PRICE USD ($)
		ATTACHMENTS FOR FIELD CONVERSION Continued...	
	LVB25769	Brackets for Compact Utility Tractors	158.36
	LVB25770	Brackets for X400/X500 HDGT and X700 Series Tractors	158.36
	LVB25518	Drive Shaft Kit (CUTS)	355.24
	LVB25545	Drive Shaft Kit (X400/X500 HDGT's, X700's)	389.49
		Spanish North American Kit:	
	BLV10081	Spanish North American Operator's Manual and Decal Kit	166.91
		Weights:	
	BM20957	9-Weight Front Weight Bracket *For X400/X500 HDGT's, X700, X720, X724, X728, X729, X740, X744, X748, X749.*	188.31
	BM24363	9-Weight Front Weight Bracket *For X400/X500 HDGT's, X700's*	188.31
	LVBM19607	Front Quik-Tatch Weight Kit (3020 Series, 3203, 4105) *Includes Rod and Spring Pins for Front Quik-Tatch Weights.*	46.20
	CH14083	Front Quik-Tatch Weight Kit (990, 4005) *Includes Rod and Spring Pins for Front Quik-Tatch Weights.*	See Parts
	LVB25363	Front Weight Bracket Extension Kit (1023E, 1025R, 1026R, 2305, 2025R, 2320, 2520) *Includes Extension Bracket and Hardware (Including Rod and Spring Pins).*	210.10
	LVBM19581	Front Weight Bracket Extension Kit (3203, 3020 Series, 4105) *Includes Extension Bracket and All Hardware (Including Rod and Spring Pins) to Hold up to Ten Front Quik-Tatch Weights.*	238.70
	BM17998	Front Weight Bracket Extension Kit (790, 3005) *Includes Extension Bracket and Hardware (Including Rod and Spring Pins) to Hold up to Four Quik-Tatch Weights.*	233.20
	R66949	Quik-Tatch Weight, 42 Lb. *For X400/X500 HDGT's and X700 Series also order M147986 Retaining Rod and Two M40461 Spring Clips. For 2210, 2305, 2025R, 2032R, 2320, 2520, 2720, 4010, 4100, 4110, and 4115 also order M128726 Retaining Rod and Four A15147 Spring Clips.*	62.06

Tow Behind Carts, Trailers, Spreaders, and Implements for RLE Tractors

Equipment for Base Machine

Spreaders:
Capacity and Type:
80 Lb. Pull-Type (TY25010)
125 Lb. Pull-Type (TY25011)
175 Lb. Pull-Type (TY25012)
175 Lb. Pull-Type (LPBST35JD)
NEED TO UPDATE ALL SPECS
40 Lb. Push-Type (TY24375)
Hopper Material
Stainless Steel (40 Lb.)
Polyethylene (80-, 125-, 175, 110- Lb.)
80 Setting Dial-A-Matic Rate Control Knob
Solid, One-Place Axle

Drive Gears
Delron/Nylon (40- and 80-Lb.)
Heavy-Duty Die Cast Metal (110-, 125-, and 175-Lb.)
Tires:
10 In. Pneumatic (80 Lb.)
14 In. Pneumatic (125- and 175-Lb.)
8x2.25 In. Semi-Pneumatic (40 Lb)
13x5 In. Turf Saver (110 Lb)
Powder-Coated 16 gauge Tubular Steel Frame
Stainless Steel Hopper Bottom

No-Stick Nylon Rate Gauge
Stainless Steel Rate Gauge
Linkage and Rotary Agitator
One-Year Limited Warranty

CODE	ATTACHMENT IDENTIFIER	DESCRIPTION	SUGGESTED LIST PRICE USD ($)
		ATTACHMENTS FOR FIELD CONVERSION	
		Carts / Hitches:	
	LPUT21JD	21 Steel Utility Cart *Available through Order Zone*	In Catalog
		FRONT MOUNTED THATCHERS:	
	TY13036	8 In. Front Thatcher (Extension)	53.50
		Miscellaneous:	
	AM105666	Extension, Wiring Harness (X400/X500 HDGT's, X700's, 322, 330, 332, 425, 445, 455) *30 in extension for use with sprayers on (X400's, X500's, 322, 330, 332, 425, 445, 455)*	See Parts
		Order Zone:	
	LP3100	100 Lb. Push-Type Spreader	In Catalog
	LP25011	125 Lb. Pull-Type Spin Spreader	In Catalog
	LPB536JD	175 LB. Broadcast Spreader	In Catalog
	LP25012	175 Lb. Pull-Type Spin Spreader	In Catalog
	LPPRT36JD	36 In. Tow Behind Lawn Roller	In Catalog
	LPAS40JD	40 In. Tow Behind Aerator-Spreader	In Catalog
	LPPA40JD	40 In. Tow Behind Plug Aerator	In Catalog
	LPSAT40JD	40 In. Tow Behind Spiker Aerator	In Catalog
	LPTA40JD	40 In. Tow Behind Thatcherator	In Catalog
	LPSTS42JD	42 in. Lawn Sweeper	In Catalog
	LPPA48JD	48 In. Tow Behind Plug Aerator *Compatible with GT, GX, X500 M-T, X700 and similar-sized lawn and garden tractors.*	In Catalog
	LP3050	50 Lb. Push-Type Spin Spreader	In Catalog
	LPPTK10	Cart Hard Top - 10 cu. Ft.	In Catalog

Tow Behind Carts, Trailers, Spreaders, and Implements for RLE Tractors
Continued

CODE	ATTACHMENT IDENTIFIER	DESCRIPTION	SUGGESTED LIST PRICE USD ($)
		ATTACHMENTS FOR FIELD CONVERSION Continued...	
	LP19478	Tow Behind Sprayer, 15 Gallon	In Catalog
	LP19479	Tow Behind Sprayer, 25 Gallon	In Catalog
	LPPCT10JD	Utility Cart, 10P	In Catalog
	LPHDC18JD	Utility Cart, 18 *The loaded weight of the cart should never exceed the weight of the tractor plus the operator. Compatible with GT, GX, X500 M-T, X700 and similar-sized lawn and garden tractors.*	In Catalog
		Sprayers / Pressure Washers:	
	LP20485	45 Gallon Tow-Behind Sprayer *Compatible with GT, GX, X500M-T and similar sized Lawn and Garden Tractors.*	In Catalog

GO TO INDEX

2013 Land Pride

Wholegoods Pricing

TRACTOR IMPLEMENTS & SKID STEER ATTACHMENTS

Prices Effective March 19, 2012

US Funds

Wholegoods: Ext. 1989, 1361, 1313, 1350
Parts & Service: Ext. 1992, 1333, 1364, 1365, 1362 & 1367
Service: Ext. 1994

P.O. Box 5060 • Salina, KS 67402-5060 • (888) 987-7433 • www.landpride.com

RETURN TO INDEX

Index by Tab

MOWERS

	Page	Factory Location
All-Flex Mowers	5	Abilene
Flail Mowers	6	Abilene
Grooming Mowers	7	Abilene

CUTTERS

Rotary Cutters	19	**Abilene -** *Single Spindle* **Lucas -** *7' - 20', RCP, Skid Steer*

TILLERS

Rotary Tillers	105	Abilene

SEEDERS

All Purpose Seeders	123	Abilene
Fertilizer Spreaders	124	Abilene
Overseeders	127	Abilene
Food Plot Seeder	129	Kipp
Primary Seeders	130	**Abilene** *15 Series* **Lucas** *20 & 25 Series*

DIRTWORKING & OTHER

Angle Brooms	143	Abilene
Bale Spears	144	Kipp
Blades	145	Kipp
Box Scrapers	154	Kipp
Core Aerators	161	Abilene
Disc Harrows	164	**Kipp** *10-25 Series,* **Lucas** *35 Series*
Ditchers	169	Kipp
Drag Harrows	171	Abilene
Drag Scrapers	172	Lucas
Grading Scraper	173	Kipp
Grapples	175	Kipp
Hydraulic Reservoir System	178	Lucas
Landscape Rakes	180	Kipp
Scarifiers	182	Kipp
Pallet Forks	183	Kipp
Pasture Aerators	185	Lucas
Post Hole Diggers	186	Abilene
Powered Rakes	189	Lucas
Quick-Hitches	190	Kipp
Seed Bed Rollers	191	Abilene
Snow Blowers	192	Abilene
Soil Pulverizers	194	Kipp
Spike Tooth Harrows	196	**Kipp** *15 Series,* **Lucas** *20 Series*
Straw Crimpers	198	Abilene
Stump Grinders	199	Kipp
Wood Chippers	200	Abilene

Color options-
Color options are available on some products which are designated throughout this pricebook. Keep in mind that some products are built in batches and various lead times need to be considered.

Land Pride Quick-Hitch Systems, available in a Cat. 1 or Cat. 2 Tractor 3-Point Hitch or Cat. 1 or 2 non-PTO Skid Steer Hitch, fit most Land Pride products and are a real time saver when working on multiple projects. Some products may require bushings. Look for the Quick-Hitch Systems logo to denote applicable products.

NOTE: Horsepower Range given on all products is a guide. Varied conditions and tractor performance must be considered.

RETURN TO INDEX

Index by Product Group

All Purpose Seeders
APS15 Series....123

All-Flex Mowers
AFM42/45 Series....5

Angle Brooms
AB Series - Skid Steer Mounted....143

Bale Spears
BS10/BSE10/BS20/BSE20 Series....144

Blades
RB05/RB15/RB16 Series....145
RB26/RB37 Series....146
RBT35 Series - 3-Way Hydraulic....148
RBT40 Series - 3-Way Hydraulic....149
RBT45 Series - 3-Way Hydraulic....150
RBT55 Series - 3-Way Hydraulic....151
RBT60 Series - 3-Way Hydraulic - Heavy Duty....152
TB25 Series: Skid Steer Mounted....153

Box Scrapers
BB05 Series....154
BB12 Series....155
BB15 Series....156
BB25 Series....157
MR15 Series....158
HR25 Series....159
HR35/HRL35 Series....160

Core Aerators
CA05 Series....161
CA15 Series....162
CA25 Series....163

Disc Harrows
DH10 Series....164
DH15 Series....165
DH25 Series....166
DH35 Series - Pull-Type....167

Ditchers
DT35 Series....169
DT55 Series....170

Drag Harrows
DRG Series....171

Drag Scrapers
BB45 Series....172

Fertilizer Spreaders
FSP Series....124
PFS Series....125
PTS Series....126

Flail Mowers
FM21/FM31/FM41 Series....6

Food Plot Seeder
FPS48 Series....129

Grading Scraper
GS15 Series....173
GS25 Series....174

Grapples - Claw
SGC15/SGC20 Series....177

Grapples - Rock
SGR15/SGS15 Series....175
SGM15 Series....176

Grooming Mowers
FDR16 Series....7
FDR25 Series....8
FDR36 Series....9

Hydraulic Reservoir System
HRS18/HRS23 Series....178
HRS30 Series....179

Landscape Rakes
LR05/LR16 Series....180
LR26LR36 Series....181

Overseeders
OS15 Series - 48" Width....127
OS15 Series - 72" Width....128

Pallet Forks
PF10 & PF20 Series....183
PFL30 Series....184

Pasture Aerators
AR25 Series - 8' & 10' Pull-Type....185

Post Hole Diggers
PD10, PD15, PD25 & PD35 Series....186
HD25 & HD35 Series - Hydraulic Drive....187
SA35 Series - Skid Steer Mounted (Planetary)....188

Powered Rakes
PR16/SR26 Series....189

Primary Seeders
PS15 Series....130
PSN20 Series - 96" Width....131
PS25 Series - 10' Width....132

Quick-Hitches
QH15 Cat. 1 & QH20 Cat. 2 Series....190
SH35 Skid Steer Series....190

Rotary Cutters
RCR12 Series - Utility Duty....19
RCR15 Series - Utility Duty....20
RCR18 Series - Utility Duty....21
RCF20 Series - Utility Duty - Smooth Top....23
RCR26 Series - Medium Duty....25
RCF27 Series - Medium Duty....26
RCF36 Series - Heavy Duty....27
SC26 Series Skid Steer....29
RCD18 Series - Utility Duty - Dual Spindle Offset....30
RCR25 Series - 8' Medium Duty....31
RCR25 Series - 10' Medium Duty....32
RCR35 Series - 10' Medium Duty....33
RCF30 Series - 8' Medium Duty....34
RCF(M)30 Series - 10' Medium Duty....35
RCF(M)36 Series - 8' Heavy Duty....36
RCF(M)36 Series - 10' Heavy Duty....37
RC2512 - 12' Medium Duty Smooth Top....39
RC3615 - 15' Medium Duty Smooth Top....40
RC3620 - 20' Medium Duty....42
RC3614 - 14' Medium Duty Offset....44
RC4015 - 15' Medium Duty Smooth Top....46
RC5510 - 10' Heavy Duty Smooth Top....48
RC5515 - 15' Heavy Duty Smooth Top....50
RC5610 - 10' Heavy Duty Smooth Top....52
RC5615 - 15' Heavy Duty Smooth Top....54
RC6510 - 10' Extra-Heavy Duty Smooth Top....56
RC6515 - 15' Extra-Heavy Duty Smooth Top....58
RC6615 - 15' Extra-Heavy Duty Smooth Top....60
RCB6615 - 15' Extra-Heavy Duty Smooth Top....62
RC6610- 10' Extra-Heavy Duty Offset....64
RCB6610- 10' Extra-Heavy Duty Offset....66
RC5014 - 14' Heavy Duty Offset....68
RC5020 - 20' Heavy Duty....70
RCP2660 - Hydraulic Parallel Arm....74
RCP3060 - Hydraulic Parallel Arm....75

Rotary Tillers
RTR05 Series Reverse-Till....105
RTR12 Series Reverse -Till....106
RTA15 Series Forward -Till....107
RTR15 Series Reverse-Till....108
RTR20 Series Reverse-Till....109
RTA20 Series Forward-Till....109
RTA25 Series Forward-Till....110
RTR25 Series Reverse-Till....111
RTA35 Series Forward-Till....112

Scarifiers
SF25 Series....182

Seed Bed Roller
SBR Series....191

Snow Blowers
SB10 Series....192
SB15 Series / SB25 Series....193

Soil Pulverizers
SP20 Series....194
SP30 Series....195

Spike Tooth Harrows
STH15 Series....196
STH20 Series....197

Straw Crimper
CR25 Series....198

Stump Grinder
SSG25 Series....199

Wood Chipper
WC15 Series....200

RETURN TO INDEX

*Estimated Times for Dealer Uncrating & Set-up

All-Flex Mowers
AFM42 ..... 30 Minutes
AFM4522 ..... 2 Hours 30 Minutes

Angle Brooms
AB ..... 45 Minutes

Bale Spears
..... 30 Minutes

Blades
RB05/15/16/26 ..... 30 Minutes
RB37 ..... 1 Hour
RBT35/40/45/55/60 ... 2 Hours
TB25 ..... 30 Minutes

Box Scrapers
BB05/12/15/25 ..... 30 Minutes
HR25/HR35/HRL35... 30 Minutes
MR15/MRL35 ..... 30 Minutes

Core Aerators
CA05 ..... 1 Hour 30 Minutes
CA15/25 ..... 30 Minutes

Crimpers
CR25 ..... 30 Minutes

Disc Harrows
DH10/15 ..... 30 Minutes
DH25 ..... 2 Hours
DH35 ..... 5 Hours

Ditchers
DT35 ..... 30 Minutes
DT55 ..... 30 Minutes

Drag Harrows
DRG ..... 15 Minutes

Drag Scrapers
BB45 ..... 30 Minutes

Flail Mowers
FM21/31/41 ..... 30 Minutes

Fertilizer Spreaders
FSP ..... 1 Hour
PFS ..... 30 Minutes
PTS ..... 40 Minutes

Grading Scrapers
GS15 ..... 30 Minutes
GS25 ..... 30 Minutes

Grapples
..... 30 Minutes

Grooming Mowers
FDR16/25/36 ..... 30 Minutes

Hitches
QH15 ..... Take out of cardboard box
..... (0 minutes)
QH20/SH35 ..... 5 minutes

Hydraulic Reservoir Systems
HRS18/23/30 ..... 15 Minutes

Landscape Rakes
LR05/16/26/36 ..... 30 Minutes

Pallet Forks
PF/PFL ..... 10 Minutes

Pasture Aerators
AR25 ..... 15 Minutes

Post Hole Diggers
HD25/35 ..... 1 Hour
PD10/15/25/35 ..... 1 Hour
SA35 ..... 30 Minutes

Powered Rakes
PR16 ..... 30 Minutes
SR26 ..... 30 Minutes

Rotary Cutters
RCR12/15/18 ..... 30 Minutes
RCR26 ..... 1 Hour
SC26 ..... 1 Hour
RCF20/26/27/36 ..... 30 Minutes
RCD18 ..... 30 Minutes
RCR2596/RCR2510.. 1 Hour 30 Minutes
RCR3596/RCR3510.. 1 Hour 30 Minutes
RC2512 ..... 40 Minutes
RC3615/RC4015 ..... 2 Hour 30 Minutes
RC55/RC65 ..... 2 Hour 30 Minutes
RC56/RC66 ..... 2 Hour 30 Minutes
RC5014/RC5020 ..... 2 Hour 30 Minutes
RC3614/RC3620 ..... 2 Hour 30 Minutes
RCP2660/RCP3060 .. 2 Hours

Rotary Tillers
RTR05/10/12/15 ..... 30 Minutes
RTA10/12/15 ..... 30 Minutes
RTA20/RTR20 ..... 30 Minutes
RTA25/RTA35 ..... 30 Minutes
RTR25 ..... 1 Hour

Scarifier
SF25 ..... 30 Minutes

Seed Bed Rollers
SBR ..... 30 Minutes

Seeders
APS15 ..... 30 Minutes
..... Small Seed Box 1 Hour 30 Minutes
FPS48 ..... 1 Hour
PFS/PTS ..... 30 Minutes
FSP500/700/1000 ..... 2 Hours
OS1548/72 ..... 2 Hours
PS15 ..... 30 Minutes
..... Small Seed Box 1 Hour 30 Minutes
PS25120 ..... 1 Hour
PSN2096 ..... 30 Minutes
..... Additional Boxes 2 Hours Each

Snow Blowers
SB10/15/25 ..... 1 Hour

Soil Pulverizers
SP20/30 ..... 15 Minutes

Spike Tooth Harrows
STH15 ..... 15 Minutes to uncrate
STH20 ..... 30 Minutes

Stump Grinders
SSG25 ..... 30 Minutes

Wood Chippers
WC15 ..... 45 Minutes

* Does not include fit-up to Tractor or Skid Steer. Times based on being unfamiliar with set-up.

RETURN TO INDEX

All-Flex Mowers

5 YEAR Limited Gearbox Warranty*

AFM42 / 45 Series

AFM4211: 30-65 HP; AFM4214/16: 40-70 HP; AFM45: 65-100 HP

Hitch: Pull Type, Adjustable Clevis Hitch & Safety Tow Chain
Tongue Screw Jack: 2200# Capacity
Discharge: Rear
Gearbox: 540 RPM, 3 Wing, 1 Splitter
Spring Loaded Idler with Overcenter Release
Automatic Transport Locks with Pull Rope Release
Deck Cylinders: Dual Acting
Hydraulic Outlets Required: 1 Set
Deck Flotation:
Individual Front to Rear and Side to Side
Input Driveline: Slip-clutch when wings are conventional
Wing Drivelines: Cat. 2
Blades - Fusion® edge

Model No.	AFM4211	AFM4214	AFM4216	AFM4522
Cutting Width	11'1"	14'	16'8"	21'9"
Overall Width	11'3 1/2"	14'3"	16'10"	22'
Transport Width	7'8"	6'8"	8'10"	9'6"
Transport Length	10'11"	12'11"	13'4"	15'2"
Decks: 3 each	48"	60"	72"	90"
Deck Thickness	3/16"	3/16"	3/16"	3/16"
Deck Overlap	6"	6"	8"	4-1/2"
Height Adjustment	1"-5 1/2" in 1/4" incr.	3/4" - 5 1/4" in 1/4" incr.	3/4" - 5 1/4" in 1/4" incr.	3/4" - 5 1/4" in 1/4" incr.
Blade Bearings	Sealed Ball Bearings	Sealed Ball Bearings	Sealed Ball Bearings	Sealed Ball Bearings
Blade Tip Speed	16,020 fpm	18,396 fpm	18,340 fpm	18,498 fpm
Blade Overlap	1 3/16"	1 1/4"	1 1/4"	2-1/4"
Drive Train	B-Section V Belt	B-Section V Belt	B-Section V Belt	1 C-Section
Input Driveline	Cat. 3 CV	Cat. 4 CV	Cat. 4 CV	Cat. 4 CV
Deck Driveline	Cat. 2	Cat. 2	Cat. 2	Cat. 3 w/Slip-Clutch
Deck Tires - 10 ea., Air	13 x 5, Sealant	18 x 9.5, Sealant or 15 x 6.6	18 x 9.5, Sealant or 15 x 6.6	18 x 9.5, Sealant or 15 x 6.6
Transport Tires	18 x 9.5, Sealant	23 x 10.5, Sealant	23 x 10.5, Sealant	P27560SR
Anti-Scalp Roller	Front Center and Outside Deck Corners	Front Center and Outside Deck Corners	Front Center and Outside Deck Corners	Front Center of Each Deck
Mowing Cap. @ 2 mph	2.68 acres	3.39 acres	4.0 acres	5.27 acres
@ 4 mph	5.37 acres	6.78 acres	8.1 acres	10.54 acres
@ 6 mph	8.10 acres	10.17 acres	12.1 acres	15.82 acres
Wing Flex - Degrees	23 L-R, 22 F-B	23 L-R, 22 F-B	23 L-R, 22 F-B	23 L-R, 22 F-B
Center Deck Flex - Degrees	13 F-B	10 L-R, 22 F-B	10 L-R, 22 F-B	10 L-R, 22 F-B

MODEL NUMBER	DESCRIPTION	MACHINE WEIGHT	SHIPPING WEIGHT	LIST PRICE
AFM4211-31	**42 SERIES ALL-FLEX MOWER - 11'1" width**	2040#	2040#	$ 16,093
AFM4214-1531	**42 SERIES ALL-FLEX MOWER - 14' width** with 15" Deck Tires	3000#	3000#	$ 16,941
AFM4216-1531	**42 SERIES ALL-FLEX MOWER - 16'8" width** with 15" Deck Tires	3315#	3315#	$ 18,973
	Options for 14' and 16'			
-18	For 18" Deck tires - delete 15 and add -18	50#	50#	$ 984
AFM4522*	**45 SERIES ALL-FLEX MOWER - 21'9" width** *(assembly required)*	4150#	4150#	$ 28,712
	Mulching Kits Available through the Parts Department			
ADD OPTION NUMBER	**FOR ALL AFMS**			
-55	Hydraulic Wing Unlock (315-722A)	6#	6#	$ 425
	COLOR OPTIONS For AFM4211, AFM4214, AFM4216			
-81	Green			
-82	Orange (includes AFM4522)			
-83	Red			

** 2 Year Gearbox Warranty*

Flail Mowers

FM21/FM31/FM41 Series

FM21: 25-55 HP; FM31 & FM41: 35-80 HP

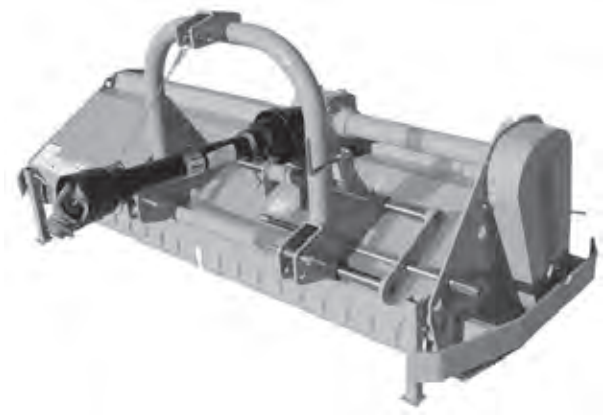

FM21 Series:
Cat. 1 Hitch
Gearbox: 540 RPM, with internal over-running clutch
Offset Hitch: 6 1/4" Right, Centered
Cutting Height: 3/4-4"
Deck Material Thickness: 11 Gauge
Knives: Fine Cut
Knife Tip Speed: 8705 fpm
Rotor Diameter: 5"
Rotor Shaft Speed: 1980 RPM
Rotor Rotation: Reverse
Driveline: Cat. 4
3 'B' Section Belts
Rear Roller Diameter: 5 1/2"
Cutting Capacity: 1"

FM31 & FM41 Series:
Cat. 1 & 2 Hitch
Offset Hitch: 7 3/4" Left & Right - Manual Screw Type
Gearbox: 540 RPM with Internal Over-running Clutch
Cutting Height: 1/2" - 6"
Deck Material Thickness: 3/16"
Knives: Fine Cut on 31 Series
Hammer on 41 Series
Brush Rake Teeth: 10 ea. on 41 Series
Rotor Diameter: 5 1/2"
Rotor Shaft Speed: 2140 RPM
Rotor Rotation: Reverse
Driveline: Cat. 4
3 'B' Section Belts
Rear Roller Diameter: 5 1/2"
Cutting Capacity: 31 Series: 1"
41 Series: 2"

MODEL NUMBER	DESCRIPTION	APPROX. MACHINE WEIGHT	SHIPPING WEIGHT	LIST PRICE
FM2160	**21 SERIES FLAIL MOWER - 60" Cutting Width**	735#	656#	$ 5,508
FM2172	**21 SERIES FLAIL MOWER - 72" Cutting Width**	772#	837#	$ 5,745
FM3188	**31 SERIES FLAIL MOWER - 88" Cutting Width** 48 Knives	1300#	1438#	$ 7,726
FM4188	**41 SERIES FLAIL MOWER - 88" Cutting Width** 24 Hammers with Brush Rake Teeth	1323#	1497#	$ 7,726

RETURN TO INDEX

Grooming Mowers

FDR16 Series

15-30 HP

Made in USA
Hitch: Cat. 1
Lower Hitch: Floating
Top Link: Floating
Deck Thickness: 3/16
Gearbox: 540 rpm
Cast Iron Housing, Beveled Gears
Spring Loaded Idler
Single B-Section Belt
Gauge Wheels: 3 1/4" x 10" Solid Rubber
Height Adjustment: 48: 3/4" - 3 1/4", 60/72: 3/4" - 5 1/4"
1/2" Increment, Plated Spacers,
1" Stress Proof® Castered Wheel Spindle
Blade Spindle: 1 3/8", Cast Iron Greasable Hubs
Blade Thickness: 1/4" Medium Lift - Hardened, Fusion® edge
Blade Overlap: 1 1/4"
Blade Tip Speed: 16,203 - 18,130 fpm
Driveline: Heavy Duty with Quick Coupler, ASAE Cat. 2
60" & 72" Fit Land Pride Quick-Hitch

MODEL NUMBER	DESCRIPTION	APPROX. MACHINE WEIGHT	SHIPPING WEIGHT	LIST PRICE
	48" FLAT DECK - REAR DISCHARGE			
FDR1648-13	4 Solid Rubber Tires	486#	545#	$ 2,308
	60" FLAT DECK - REAR DISCHARGE			
FDR1660-13	4 Solid Rubber Tires	577#	642#	$ 2,444
	72" FLAT DECK - REAR DISCHARGE			
FDR1672-13	4 Solid Rubber Tires	619#	700#	$ 2,657

FDR16 --------- ADDITIONAL SAVINGS ---------FDR16

When 5 same color and width units are ordered at one time DEDUCT $62 LIST ON EACH MOWER

ADD option No. -99 to Model Number and Deduct $ (62)

ADD OPTION NUMBER	COLOR OPTIONS
-81	Green - 5 Pak only
-82	Orange - 5 Pak and Single Units Available
-83	Red - 5 Pak only

	ACCESSORIES available through the Parts Department:			
315-516S	Front Roller Assembly - 4" x 5.5"	5#	5#	$ 66
890-700C	Mulching Blades - 48" - 3 ea. required			$ 31
890-702C	Mulching Blades - 60" - 3 ea. required			$ 31
890-698C	Mulching Blades - 72" - 3 ea. required			$ 31

RETURN TO INDEX

Grooming Mowers

FDR25 Series

15-50 HP

Made in USA
Hitch: Cat. 1
  Lower Hitch: Floating & Adjustable
   Clevis Type with Plated Pins
Top Link: Floating & Adjustable
Welded Tubular Chassis
Deck Thickness: 3/16"
Gearbox: 540 rpm
  Cast Iron Housing
  Beveled Gears
Single B-Section Belt
Spring Loaded Idler
Gauge Wheels: 3 1/4" x 10" Solid Rubber Tires
    w/Bearings
  FDR2584: 4" x 11" Semi-Solid Tires
Height Adjustment: 3/4"- 5 1/4" in 1/2" Increments
  Plated Spacers, 1" Stress Proof® Castered Wheel Spindle
Blade Spindle: 1 3/8", Cast Iron Greaseable Hubs
Blade Thickness: 1/4" (5/16" on 84")
   Medium Lift - Hardened
Blade Overlap: 1 1/4"
Blade Tip Speed (fpm);
   72: 18,130, 84: 17,210
Heavy Duty Driveline with Quick Coupler
Fits Land Pride Quick-Hitch

MODEL NUMBER	DESCRIPTION	APPROX. MACHINE WEIGHT	SHIPPING WEIGHT	LIST PRICE
	25 SERIES - REAR DISCHARGE - 72"			
FDR2572-13	4 Solid Rubber Tires	718#	781#	$ 3,485
FDR2572-14	4 Solid Rubber Tires and Front Roller	726#	789#	$ 3,598
	25 SERIES - REAR DISCHARGE - 84"			
FDR2584-13	4 Semi-Solid Tires & Bearings	812#	878#	$ 4,031
FDR2584-14	4 Semi-Solid Tires with Bearings and Front Roller	820#	886#	$ 4,143

ADD OPTION NUMBER	COLOR OPTION
-82	Orange

	ACCESSORIES Available through the Parts Department			
310-254S	Front Roller - 4" x 10" for 72 & 84	8#	8#	$ 116
890-698C	Mulching Blades - 72" - 3 ea. required			$ 31
890-706C	Mulching Blades - 84" - 3 ea. required			$ 31

Grooming Mowers

FDR36 Series

30-60 HP

Made in USA
Hitch: Cat. 1
Lower Hitch: Floating Clevis with
  Plated Pins
Top Link: Floating Clevis
  Gearbox: 540 rpm
  Cast Iron Housing
  Beveled Gears
Deck Thickness: $^{3}/_{16}$"
Spring Loaded Idler
Double V Powerband Belt
Gauge Wheels: 5" x 13" Semi-Solid Tires w/bearings
Height Adjustment: 1" - 6.5", 1/4" Increments,
  Plated Spacers
$1^{1}/_{4}$" Castered Wheel Spindle
Blade Spindle: $1^{3}/_{8}$" Stress-Proof Shaft
Deck Spindle Housing: Cast Iron Greasable Hubs
Blades: 6 Free-Swinging, 1/4" Medium Lift, Hardened,
  2 per Spindle
Blade Overlap: 2"
Blade Tip Speed: 16,500 fpm
Driveline: Heavy Duty with Quick Coupler, ASAE Cat. 4
Fits Land Pride Quick-Hitch

MODEL NUMBER	DESCRIPTION	APPROX. MACHINE WEIGHT	SHIPPING WEIGHT	LIST PRICE
	90" FLAT DECK - REAR DISCHARGE			
FDR3690-13	4 Semi-Solid Tires	930#	972#	$ 5,488
FDR3690-14	4 Semi-Solid Tires and Front Roller (310-443A)	936#	978#	$ 5,596

ADD OPTION NUMBER	COLOR OPTION
-81	Green
-82	Orange

	ACCESSORIES available through the Parts Department:			
310-444S	Front Roller Package for FDR3690 (4" x 10" Roller)	6#	6#	$ 108

Rotary Cutters

RCR12 Series - Utility Duty

20-50 HP

Made in USA
Hitch: Cat. 1 & Cat. 1 Limited; Floating Clevis Type Top Link
All Welded Deck to Lower Band
Deck Height: 7¼"

Deck Thickness: 12 Gauge
Gearbox: 540 RPM, 50 HP
Beveled Gears
Cast Iron Housing
Driveline: Cat. 3; Center Shear Bolt
or 2-Plate Slip-Clutch
Front and Rear Rubber Guards
3/4" Blade Holder Bar with Stump Jumper
Blades: 2 ea. (½" x 3" Heat Treated)
Free Swinging Alloy Steel Suction Blades
Blade Bolt: Keyed with Hardened Flat Washer & Lock Nut
Blade Speed: 48:13,256 fpm; 60:16,536 fpm;
72:15,033 fpm
Tailwheel: 15" Laminated Tire with Cast Iron Hub
Cutting Height: 1¼" - 10"
Skids: Weld-on
Fits Land Pride Quick-Hitch
*Bolt on Skid Shoes Available through Parts Dept. for 60" & 72"

----------AVAILABLE IN 5-PAK ONLY ----------

MODEL NUMBER		DESCRIPTION	APPROX. MACHINE WEIGHT	SHIPPING WEIGHT	LIST PRICE
		12 SERIES - 48" ROTARY CUTTER			
RCR1248	**-11 -31 -99**	Laminated Tailwheel, Shear Bolt	400#	447#	$ 1,257
	-11 -32 -99	Laminated Tailwheel, Slip-Clutch	432#	464#	$ 1,455
		12 SERIES - 60" ROTARY CUTTER			
RCR1260	**-11 -31 -99**	Laminated Tailwheel, Shear Bolt	478#	525#	$ 1,340
	-11 -32 -99	Laminated Tailwheel, Slip-Clutch	528#	563#	$ 1,538
		12 SERIES - 72" ROTARY CUTTER			
RCR1272	**-11 -31 -99**	Laminated Tailwheel, Shear Bolt	564#	611#	$ 1,795
	-11 -32 -99	Laminated Tailwheel, Slip-Clutch	608#	645#	$ 1,993

--------- ADDITIONAL SAVINGS ---------

When Eight 5-Paks are ordered at one time DEDUCT $22 LIST ON EACH CUTTER.

Each 5-Pak must be same color, same size, same options.

DELETE option No. -99 and ADD option No. -98 $ (22)

ADD OPTION NO.	COLOR OPTIONS
-81	Green
-82	Orange
-83	Red

	AVAILABLE THROUGH PARTS DEPT. ONLY	
326-120A	Replaceable Skid Shoes - for 60" & 72"	$ 37

Gearbox HP rating is based on in field use and performance

WARNING!
Rotary Cutters used in non-agricultural areas must be equipped with front & rear guards. The possibility of thrown objects can be hazardous to persons or property.

RETURN TO INDEX

Rotary Cutters

RCR15 Series - Utility Duty

20-50 HP

Made in USA
Hitch: Cat. 1 & Cat. 1 Limited; 3-Point with Floating
  Clevis Type Top Link
One Piece Reinforced Deck
Deck Height: 7 1/4"
Deck Thickness: 12 Gauge
Gearbox: 540 RPM
  Beveled Gears
  Cast Iron Housing
Driveline: Cat. 3; 1/2" Center Shear Bolt
  or 2-Plate Slip-Clutch
Optional Front and Rear Rubber Guard
Stump Jumper
Blades: 2 ea. (1/2" x 3" Heat Treated)
  Free Swinging Alloy Steel Suction Blades
Blade Bolt: Keyed with Hardened Flat Washer
  & Lock Nut
Blade Speed: 11,459 fpm on 42"; 13,090 fpm on 48"
Tailwheel: 4" x 16" Molded Rubber - 360 Degree Swivel
Cutting Height: 1 3/4" - 11 1/2"
Cutting Capacity: 2"
Skids: Weld-on
Fits Land Pride Quick-Hitch

MODEL NUMBER		DESCRIPTION	APPROX. MACHINE WEIGHT	SHIPPING WEIGHT	LIST PRICE
		15 SERIES - 42" ROTARY CUTTER			
RCR1542	**-01123142**	Molded Rubber Tailwheel, Shear Bolt Driveline Front and Rear Rubber Guard	402#	500#	$ 1,500
		For Slip-Clutch Driveline DELETE -31 from Model No. and ADD -32		36#	$ 145
		TO DELETE GUARDING			
		Front Rubber Guard DELETE -01 from Model No. (312-674A)	10#	10#	$ (46)
		Rear Rubber Guard DELETE -42 from Model No. (312-675A)	10#	10#	$ (23)
		15 SERIES - 48" ROTARY CUTTER			
RCR1548	**-01123142**	Molded Rubber Tailwheel, Shear Bolt Driveline Front and Rear Rubber Guard	424#	514#	$ 1,539
		For Slip-Clutch Driveline DELETE -31 from Model No. and ADD -32		36#	$ 145
		TO DELETE GUARDING			
		Front Rubber Guard DELETE -01 from Model No. (312-672A)	10#	10#	$ (46)
		Rear Rubber Guard DELETE -42 from Model No. (312-673A)	10#	10#	$ (29)

ADDITIONAL SAVINGS
____RCR 5-PAK STOCKING PROGRAM____
When 5 same color, width and optioned units are ordered at one time - DEDUCT $44 List on each cutter

Add option No. -99 to Model Number & Deduct	(46#)	$	(44)

ADD OPTION NO.	COLOR OPTIONS
-81	Green - 5 Pak only
-82	Orange - 5 Pak and Single units available
-83	Red - 5 Pak only

Gearbox HP rating is based on in field use and performance

WARNING!
Rotary Cutters used in non-agricultural areas must be equipped with front & rear guards. The possibility of thrown objects can be hazardous to persons or property.

Rotary Cutters

RCR18 Series - Utility Duty

20-65 HP

Made in USA
Hitch: Cat. 1; Floating Clevis Type Top Link
and Clevis Type Lower Links
All Welded Deck
Deck Height: 60" - 7$^1/_2$"; 72" - 9"
Cutting Capacity: 2"
Deck Thickness: 60" - 11 gauge; 72" - 10 gauge

Side Skirt Thickness: 10 gauge
Gearbox: 540 RPM, 65 HP
Beveled Gears
Cast Iron Housing
Driveline: Cat. 3; Center Shear Bolt
or 2-Plate Slip-Clutch
Front Rubber Optional
Rear Rubber Optional
Rear Metal Band Standard
Blade Holder Bar with Stump Jumper
Blades: 2 ea. ($^1/_2$" x 3" Heat Treated)
Free Swinging Alloy Steel Suction Blades
Blade Bolt: Keyed with Hardened Flat Washer &
Lock Nut
Blade Speed: 16,363 fpm on 60"; 14,853 fpm on 72"
Tailwheel: 15" Laminated Tire with Cast Iron Hub
or 4" x 16" Molded Rubber - 360 Degree Swivel
Cutting Height: 60": 1$^1/_2$" - 13"; 72: 1$^1/_2$" - 11$^1/_2$"
Skids: Weld-on
Fits Land Pride Quick-Hitch
*Bolt on Skid Shoes Available through Parts Dept.

MODEL NUMBER		DESCRIPTION	APPROX. MACHINE WEIGHT	SHIPPING WEIGHT	LIST PRICE
		18 SERIES - 60" ROTARY CUTTER			
RCR1860	**-11 -31**	Laminated Tailwheel, Shear Bolt	571#	669#	$ 1,688
	-11 -32	Laminated Tailwheel, Slip-Clutch	584#	682#	$ 1,837
	-12 -31	Molded Rubber Tailwheel, Shear Bolt	558#	656#	$ 1,721
		Choose a Front Guard			
	ADD -01	Front Rubber Guard (312-844A)	15#	15#	$ 47
	ADD -02	Front Chain Guard (312-845A)	50#	50#	$ 134
		Choose a Rear Guard			
	ADD -42	Rear Rubber Guard (312-652A)	23#	23#	$ 48
	ADD -41	Rear Chain Guard (312-834A)	46#	46#	$ 146
		18 SERIES - 72" ROTARY CUTTER			
RCR1872	**-11 -31**	Laminated Tailwheel, Shear Bolt	704#	822#	$ 2,158
	-11 -32	Laminated Tailwheel, Slip-Clutch	715#	833#	$ 2,305
	-12 -31	Molded Rubber Tailwheel, Shear Bolt	691#	809#	$ 2,191
		Choose a Front Guard			
	ADD -01	Front Rubber Guard (312-846A)	22#	22#	$ 52
	ADD -02	Front Chain Guard (312-847A)	60#	60#	$ 160
		Choose a Rear Guard			
	ADD -42	Rear Rubber Guard (312-651A)	23#	23#	$ 53
	ADD -41	Rear Chain Guard (312-842A)	46#	46#	$ 174

ADDITIONAL SAVINGS
___RCR 5-PAK STOCKING PROGRAM ___

When 5 same color, width and optioned units are ordered at one time - DEDUCT $44 List on each cutter

Add option No. -99 to Model Number & Deduct (46#) $ (44)

ADD OPTION NO.	COLOR OPTIONS
-81	Green - 5 Pak only
-82	Orange - 5 Pak and Single units available
-83	Red - 5 Pak only

Gearbox HP rating is based on in field use and performance

WARNING!
Rotary Cutters used in non-agricultural areas must be equipped with front & rear guards. The possibility of thrown objects can be hazardous to persons or property.

Rotary Cutters

RCR18 Series - Utility Duty

45-90 HP

Made in USA
Hitch: Cat. 1 and 2; Floating Clevis Type Top Link and Clevis Type Lower Links
All Welded Deck
Deck Height: 9 1/8"
Deck Thickness: 10 gauge
Cutting Capacity: 2"
Gearbox: 540 RPM, 90 HP
Beveled Gears
Cast Iron Housing
Driveline: Cat. 4; 2-Plate Slip-Clutch
Front Rubber or Chain Guard
Rear Chain Guard Optional
Rear Metal Band Standard
Blade Holder Bar with Stump Jumper
Blades: 2 ea. (1/2" x 4" Heat Treated)
Free Swinging Alloy Steel Suction Blades
Blade Bolt: Keyed with Hardened Flat Washer & Lock Nut
Blade Speed: 17,100 fpm
Tailwheel: 15" Laminated Tire with Cast Iron Hub
Cutting Height: 2"-11"
Skids: Weld-on
Fits Land Pride Quick-Hitch

MODEL NUMBER	DESCRIPTION	APPROX. MACHINE WEIGHT	SHIPPING WEIGHT	LIST PRICE
RCR1884	**18 SERIES - 84" ROTARY CUTTER**	827#	907#	$ 3,048
ADD OPTION NO.	**Choose Front Guarding**			
-01	Front Rubber Guard	24#	24#	$ 81
-02	Front Chain Guard	41#	41#	$ 167
	Choose One Tailwheel Package			
-16	Single Laminated Tailwheel	105#	105#	$ 332
-17	Dual Laminated Tailwheel	234#	234#	$ 704
	Choose Rear Guarding			
-41	Rear Chain Guard	80#	80#	$ 185

ADD OPTION NO.	COLOR OPTIONS
-81	Green
-82	Orange
-83	Red

Gearbox HP rating is based on in field use and performance

WARNING!

Rotary Cutters used in non-agricultural areas must be equipped with front & rear guards. The possibility of thrown objects can be hazardous to persons or property.

Rotary Cutters

RCF20 Series - Utility Duty - Smooth Top

20-65 HP

Made in USA
Hitch: Cat. 1; Floating Top Link
  Quick-Hitch Adaptable
All Welded Deck
Deck Height: 60" - 9 11/16"; 72" - 11"
Cutting Capacity: 2"
Cutting Height: 1 1/2" - 12"

Deck Thickness: 10 gauge
Side Skirt: 10 Gauge
Gearbox Rating: 65 HP
Gearbox: 540 RPM, Beveled Gears
  Cast Iron Housing
Driveline: Cat. 3; Shear Bolt
  or 2-Plate Slip-Clutch
Optional Front Guard: Rubber or Chain
Standard Rear Metal Banding
Optional Rear Guard: Rubber or Chain
Blade Holder Bar with Stump Jumper
Blades: 2 ea. (1/2" x 3" Heat Treated)
  Free Swinging High-Lift, Low Friction Blades
Blade Bolt: Keyed with Hardened Flat Washer & Lock Nut
Blade Speed: 16,363 fpm on 60"; 14,955 fpm on 72"
Tailwheel: Single or Dual, 4" x 15" Laminated Tire
  or 4" x 16" Molded Rubber - 360 Degree Swivel
Skids: Weld-on
Fits Land Pride Quick-Hitch
***Bolt on Skid Shoes Available through Parts Dept.**

MODEL NUMBER		DESCRIPTION		APPROX. MACHINE WEIGHT	SHIPPING WEIGHT	LIST PRICE
RCF2060		**20 SERIES - 60" ROTARY CUTTER**				
	-11 -31	Laminated Tailwheel, Shear Bolt		590#	688#	$ 1,844
	-11 -32	Laminated Tailwheel, Slip-Clutch		603#	701#	$ 1,993
	-12 -31	Molded Rubber Tailwheel, Shear Bolt		577#	675#	$ 1,877
		Choose a Front Guard				
	ADD -01	Front Rubber Guard	(312-844A)	17#	17#	$ 47
	ADD -02	Front Chain Guard	(312-845A)	24#	24#	$ 134
		Choose a Rear Guard				
	ADD -42	Rear Rubber Guard	(312-652A)	20#	20#	$ 48
	ADD -41	Rear Chain Guard	(312-834A)	29#	29#	$ 146
RCF2072		**20 SERIES - 72" ROTARY CUTTER**				
	-11 -31	Laminated Tailwheel, Shear Bolt		712#	830#	$ 2,314
	-11 -32	Laminated Tailwheel, Slip-Clutch		723#	841#	$ 2,461
	-12 -31	Molded Rubber Tailwheel, Shear Bolt		699#	817#	$ 2,347
		Choose a Front Guard				
	ADD -01	Front Rubber Guard	(312-846A)	22#	22#	$ 52
	ADD -02	Front Chain Guard	(312-847A)	39#	39#	$ 160
		Choose a Rear Guard				
	ADD -42	Rear Rubber Guard	(312-651A)	23#	23#	$ 53
	ADD -41	Rear Chain Guard	(312-842A)	40#	40#	$ 174

ADDITIONAL SAVINGS
___RCR 5-PAK STOCKING PROGRAM ___

When 5 same color, width and optioned units are ordered at one time - DEDUCT $42 List on each cutter

Add option No. -99 to Model Number & Deduct	(46#)	$	(42)

ADD OPTION NO.	COLOR OPTIONS
-81	Green - 5 Pak only
-82	Orange - 5 Pak and Single units available
-83	Red - 5 Pak only

	Available Through Parts Dept. Only	
326-120A	Bolt-on Skid Shoes - 60" & 72"	$ 37

WARNING!
Rotary Cutters used in non-agricultural areas must be equipped with front & rear guards. The possibility of thrown objects can be hazardous to persons or property.

Rotary Cutters

RCF20 Series - Utility Duty - Smooth Top

45-90 HP

Made in USA
Hitch: Cat. 1 and 2; Floating Top Link
Clevis Type Lower Links, Quick-Hitch Adaptable
Cutting Height: 1 1/2"-12"
All Welded Deck
Deck Height: 11 15/16"
Deck Thickness: 10 gauge
Side Skirt: 10 Gauge
Cutting Capacity: 2"
Gearbox Rating: 90 HP
Gearbox: 540 RPM, 90 HP
Beveled Gears
Cast Iron Housing
Driveline: Cat. 4; 2-Plate Slip-Clutch
Optional Front Guard: Rubber or Chain
Optional Rear Chain Guard
Standard Rear Metal Band
Blade Holder Bar with Stump Jumper
Blades: 2 ea. (1/2" x 4" Heat Treated)
Free Swinging Alloy Steel Suction Blades
Blade Bolt: Keyed with Hardened Flat Washer & Lock Nut
Blade Speed: 17,113 fpm
Tailwheel: 4" x 15" Laminated Tire w/Cast Iron Hub - 360 Degree Swivel
Skids: Weld-on
Fits Land Pride Quick-Hitch
*Bolt on Skid Shoes Available through Parts Dept.

MODEL NUMBER	DESCRIPTION	APPROX. MACHINE WEIGHT	SHIPPING WEIGHT	LIST PRICE
RCF2084	**20 SERIES - 84" ROTARY CUTTER**	915#	1000#	$ 3,204
ADD OPTION NO.	**Choose Front Guarding**			
-01	Front Rubber Guard	24#	24#	$ 81
-02	Front Chain Guard	41#	41#	$ 167
	Choose One Tailwheel Package			
-16	Single Laminated Tailwheel	108#	108#	$ 332
-17	Dual Laminated Tailwheel	240#	240#	$ 704
	Choose Rear Guarding			
-41	Rear Chain Guard	62#	62#	$ 185

ADD OPTION NO.	COLOR OPTIONS
-81	Green
-82	Orange
-83	Red

	Available Through Parts Dept. Only	
326-120A	Bolt-on Skid Shoes - 84"	$ 37

WARNING!

Rotary Cutters used in non-agricultural areas must be equipped with front & rear guards. The possibility of thrown objects can be hazardous to persons or property.

Rotary Cutters

RCR26 Series - Medium Duty

40-130 HP 60" & 72"
60-130 HP 84"

Hitch: 60" & 72" Cat. 1 or 2 (QH Adaptable)
84": Cat. 2 Std. (QH Adaptable) or Cat. 3 Adaptable
All Welded Deck
Deck Height:
60" & 72" is 9"
84" is $9^1/_8$"
Deck Thickness: 10 Gauge
Side Panels: $^1/_4$"
Gearbox: 540 RPM, 110 HP
$1^3/_8$" - 6 Spline

Gearbox Output Shaft: $2^1/_2$"
Driveline: Cat. 4 with
4 Plate Slip-Clutch
Stump Jumper: 60" - $^3/_{16}$" x 24" Round
72" - $^3/_{16}$" x $30^1/_2$" Round
84" - $^3/_{16}$" x 24" x 38" Oval
Blades: Free Swinging High Suction
60" - $^1/_2$" x 4" x 25"
72" - $^1/_2$" x 4" x 29"
84"- $^1/_2$" x 4" x 31"
Blade Bolt: Keyed with Hardened
Flat Washer & Lock Nut
Blade Tip Speed:
60" - 12,384 fpm
72" - 14,861 fpm
84" - 14,369 fpm
Tailwheel(s): 15" Laminated, with Cast
Iron Hub, Tapered Roller Bearings
Cutting Height: 2" - 12"
Cutting Capacity: 3"
Skids: Replaceable
Front and Rear Guards Available

MODEL NUMBER	DESCRIPTION		APPROX. MACHINE WEIGHT	SHIPPING WEIGHT	LIST PRICE
RCR2660	26 SERIES - 60" ROTARY CUTTER		878#	958#	$ 2,757
	Choose Front and Rear Guarding				
ADD -01	Front Chain Guard	(312-781A)	35#	35#	$ 193
ADD -02	Front Rubber Guard	(312-782A)	30#	30#	$ 141
ADD -41	Rear Chain Guard	(312-410A)	66#	66#	$ 227
RCR2672	26 SERIES - 72" ROTARY CUTTER		934#	1014#	$ 3,152
	Choose Front and Rear Guarding				
ADD -01	Front Chain Guard	(312-793A)	46#	46#	$ 225
ADD -02	Front Rubber Guard	(312-794A)	40#	40#	$ 155
ADD -41	Rear Chain Guard	(312-396A)	73#	73#	$ 260
RCR2684	26 SERIES - 84" ROTARY CUTTER		1128#	1208#	$ 3,689
	Choose Front and Rear Guarding				
ADD -01	Front Chain Guards	(312-435A)	68#	68#	$ 255
ADD -41	Rear Chain Guards	(312-436A)	94#	94#	$ 279
	You Must Choose One for RCR2684				
ADD -11	3 Point with Single 15" Laminated Tire		70#	70#	$ 734
ADD -14	3 Point with Dual 15" Laminated Tires		195#	195#	$ 1,111

ADD OPTION NO.	COLOR OPTION
-82	Orange

Gearbox HP rating is based on in field use and performance

WARNING!
Rotary Cutters used in non-agricultural areas must be equipped with front & rear guards. The possibility of thrown objects can be hazardous to persons or property.

Rotary Cutters

RCF27 Series - Medium Duty

40-130 HP: 60" & 72"
60-130 HP: 84"

Hitch: 60" & 72" Cat. 1* or 2 (QH Adaptable)
84": Cat. 2 Std. or Cat. 3 QH Adaptable or Pull-Type
All Welded Deck
Deck Height:
60" & 72" is 11 1/4"
84" is 10 1/8"
Deck Thickness: 10 Gauge
Side Panels: 1/4"

Gearbox: 540 RPM, 130 HP
1 3/8" - 6 Spline
Gearbox Output Shaft: 2"
Driveline: Cat. 4 with
4 Plate Slip-Clutch
Stump Jumper: 60" - 3/16" x 24" Round
72" - 3/16" x 30 1/2" Round
84" - 3/16" x 24" x 38"Oval
Blades: Free Swinging High Suction
60" - 1/2" x 4" x 25"
72" - 1/2" x 4" x 29"
84"- 1/2" x 4" x 31"
Blade Bolt: Keyed with Hardened
Flat Washer & Lock Nut
Blade Tip Speed:
60" - 12,384 fpm
72" - 14,861 fpm
84" - 14,369 fpm
Tailwheel(s): 15" Laminated, with Cast
Iron Hub, Tapered Roller Bearings
Cutting Height: 1 1/2" - 12"
Cutting Capacity: 3"
Skids: Replaceable
Front and Rear Guards Available

MODEL NUMBER	DESCRIPTION	APPROX. MACHINE WEIGHT	SHIPPING WEIGHT	LIST PRICE
RCF2760	**27 SERIES - 60" ROTARY CUTTER**	864#	944#	$ 2,866
	Choose Front and Rear Guarding			
-01	Front Chain Guard (326-302A)	39#	39#	$ 193
-02	Front Rubber Guard (326-303A)	24#	24#	$ 141
-41	Rear Chain Guard (326-281A)	52#	52#	$ 227
RCF2772	**27 SERIES - 72" ROTARY CUTTER**	967#	1,047#	$ 3,264
	Choose Front and Rear Guarding			
-01	Front Chain Guard (326-306A)	46#	46#	$ 225
-02	Front Rubber Guard (326-307A)	28#	28#	$ 155
-41	Rear Chain Guard (326-242A)	59#	59#	$ 260
RCF2784	**27 SERIES - 84" ROTARY CUTTER**	989#	1,069#	$ 3,689
	Choose Front Guarding			
-01	Front Chain Guards (312-869A)	41#	41#	$ 255
-02	Front Rubber Guard (312-866A)	25#	25#	$ 166
	You Must Choose One for RCF2784			
-11	3 Point with Single 15" Laminated Tire	262#	262#	$ 734
-14	3 Point with Dual 15" Laminated Tires	335#	335#	$ 1,111
-12	Pull-Type with 21" Laminated Tires	500#	500#	$ 2,278
	You Must Choose One for Pull-Type RCF2784			
-21	Ratchet Height Adjustment	15#	15#	$ 200
-22	Hydraulic Type Adjustment	40#	40#	$ 387
	Choose Rear Guarding			
-41	Rear Chain Guards (326-219A)	62#	62#	$ 279
	COLOR OPTION			
-81	Green			
-82	Orange			
-83	Red			
	Available Through Parts Dept. Only			
326-607A	*Requires Top 3 Pt Cat 2/Cat 1 Conversion Kit			

Gearbox HP rating is based on in field use and performance

WARNING!

Rotary Cutters used in non-agricultural areas must be equipped with front & rear guards. The possibility of thrown objects can be hazardous to persons or property.

Rotary Cutters

RCF36 Series - Heavy Duty

60: 50-190 HP
72: 60-190 HP

Hitch: Cat. 1* or 2 (QH Adaptable)
All Welded Deck
Deck Height:13 3/8"
Deck Thickness: 3/16"
Side Panels: 1/4"

Gearbox: 540 RPM, 190 HP
1 3/4" - 20 Spline
Gearbox Output Shaft: 2 3/8"
Driveline: Cat. 5 with 4 Plate Slip-Clutch
Stump Jumper: 3/16"
Blades: Free Swinging High Lift
60" - 1/2" x 4" x 23"
72" - 1/2" x 4" x 29"
Blade Bolt: Keyed with Hardened
Flat Washer & Lock Nut
Blade Tip Speed:
60" - 13,572 fpm
72" - 14,861 fpm
Tailwheel(s): 15" Laminated, with Cast Iron Hub,
Tapered Roller Bearings, 21" on Pull-Type
Cutting Height: 2" - 12"
Cutting Capacity: 4"
Skids: Replaceable
Front and Rear Chain Guards Available

MODEL NUMBER	DESCRIPTION		APPROX. MACHINE WEIGHT	SHIPPING WEIGHT	LIST PRICE
RCF3660	36 SERIES - 60" ROTARY CUTTER		1147#	1,227#	$ 4,035
	Choose Front Guarding				
-01	Front Chain Guard	(326-177A)	46#	46#	$ 193
-02	Front Rubber Guard	(326-254A)	19#	19#	$ 141
-03	Front Double Chain Guard	(326-255A)	63#	63#	$ 254
	Choose Rear Guarding				
-41	Rear Chain Guard	(326-310A)	40#	40#	$ 291
-43	Rear Double Chain Guard	(326-318A)	57#	57#	$ 385
-45	Rear Band Guard	(326-269A)	30#	30#	$ N/C
	You Must Choose One				
-90	Standard Blade Carrier - 60"		112#		N/C
-91	Shredder Kit		142#		$ 595
RCF3672	36 SERIES - 72" ROTARY CUTTER		1,238#	1,318#	$ 4,670
	Choose Front Guarding				
-01	Front Chain Guard	(326-200A)	55#	55#	$ 225
-02	Front Rubber Guard	(326-256A)	23#	23#	$ 155
-03	Front Double Chain Guard	(326-257A)	75#	75#	$ 303
	Choose Rear Guarding				
-41	Rear Chain Guard	(326-317A)	44#	44#	$ 323
-43	Rear Double Chain Guard	(326-319A)	64#	64#	$ 411
-45	Rear Band Guard	(326-270A)	35#	35#	$ N/C
	You Must Choose One				
-90	Standard Blade Carrier - 72"		166#		N/C
-91	Shredder Kit		170#		$ 595

ADD OPTION NO.	COLOR OPTION
-81	Green
-82	Orange
-83	Red

Available Through Parts Dept. Only

326-607A *Requires Top 3 Pt Cat 2/Cat 1 Conversion Kit

Gearbox HP rating is based on in field use and performance

WARNING!

Rotary Cutters used in non-agricultural areas must be equipped with front & rear guards. The possibility of thrown objects can be hazardous to persons or property.

Rotary Cutters

RCF36 Series - Heavy Duty

84 Lift: 70-190 HP; Pull: 50-190 HP

Hitch: Cat. 2 or Cat. 3 (QH Adaptable)
All Welded Deck
Deck Height: $13^{3}/_{8}$"
Deck Thickness: $^{3}/_{16}$"
Side Panels: $^{1}/_{4}$"
Gearbox: 540 RPM, 190 HP
$1^{3}/_{4}$" - 20 Spline
Gearbox Output Shaft: $2^{3}/_{8}$"
Driveline: Cat. 5 with 4 Plate Slip-Clutch
Stump Jumper: $^{3}/_{16}$"
Blades: Free Swinging High Lift
$^{1}/_{2}$" x 4" x 29"
Blade Bolt: Keyed with Hardened
Flat Washer & Lock Nut
Blade Tip Speed: 14,369 fpm
Tailwheel(s): 15" Laminated, with Cast Iron Hub,
Tapered Roller Bearings, 21" on Pull-Type
Cutting Height: 2" - 12"
Cutting Capacity: 4"
Skids: Replaceable
Front and Rear Chain Guards Available

MODEL NUMBER	DESCRIPTION		APPROX. MACHINE WEIGHT	SHIPPING WEIGHT	LIST PRICE
RCF3684	**36 SERIES - 84" ROTARY CUTTER**		1,369#	1,449#	$ 4,389
	Choose Front Guarding				
-01	Front Chain Guards	(326-661A)	64#	64#	$ 255
-02	Front Rubber Guard	(326-258A)	26#	26#	$ 166
-03	Front Double Chain Guards	(326-662A)	94#	94#	$ 620
	You Must Choose One				
***-12**	Pull-Type with Dual 21" Laminated Tires		565#	565#	$ 2,278
-14	3 Point with Dual 15" Laminated Tires		501#	501#	$ 1,958
	You Must Choose One for 3-Point				
-21	Ratchet Height Adjustment		15#	15#	$ 200
-23	Hydraulic Height Adjustment		40#	40#	$ 370
	You Must Choose One for Pull-Type				
-21	Ratchet Height Adjustment		15#	15#	$ 200
-22	Hydraulic Type Adjustment		40#	40#	$ 417
	You Must Choose Rear Guarding				
-41	Rear Chain Guard	(326-184A)	66#	66#	$ 413
-43	Rear Double Chain Guards	(326-264A)	83#	83#	$ 603
-45	Rear Band Guard	(326-271A)	40#	40#	$ N/C
	You Must Choose One				
-90	Standard Blade Carrier - 84"		220#		N/C
-91	Shredder Kit		200#		$ 595

ADD OPTION NO.	COLOR OPTION
-81	Green
-82	Orange
-83	Red

Gearbox HP rating is based on in field use and performance

WARNING!

Rotary Cutters used in non-agricultural areas must be equipped with front & rear guards. The possibility of thrown objects can be hazardous to persons or property.

Rotary Cutters

SC26 Series Skid Steer

Various Flow Requirements

SKID STEER MUST BE EQUIPPED WITH A CASE DRAIN SYSTEM.

Cutting Height: 1.5” to 18” infinitely variable
Cutting Width: 60” or 72"
Overall Width: 60: 65-1/2” 72: 78"
Overall Length: 60: 73” 72: 91"
Cutting Capacity: 2” Diameter
Blade Rotation: Clockwise
Blades & Blade Carrier: ½”x 4” Updraft, Heavy Duty Round Pan Stump Jumper
Hitch: Universal Floating-Hitch Mounting Plate Adjustable to Center or 8 1/2" Right Offset
Double Deck Design Construction: Lower Deck: 10 Gauge; Upper Deck: 14 Gauge
Side Skirt Construction: ¼” Steel
Front Deck Protection: Single Row Chain Guard, Standard Eq.
Rear Deck Protection: Double Row Chain Guard, Standard Eq.
Deck Lift Height Protection: Safety Chain Limiter
Deck Wear Protection: Optional Four Corner Mounted Skid Shoes
Operator Protection: Optional Protective Door Shield
Cutting Height Gauging: Optional Pivoting & Adjustable Front Mounted Gauge Wheel w/ Laminated Tire
Maximum Operating Pressure: 3000 psi
Low Volume Drive Motors: For hyd. systems with 11-16 GPM flow at 1500-3000 PSI; (60" only)
Medium Volume Drive Motors: For hyd. systems with 17-21 GPM flow at 1500-3000 PSI;
High Volume Drive Motors: For hyd. systems with 18-27 GPM flow at 1500-3000 PSI;
Low Volume Motor Blade Tip Speed: 18,540 FPM at 16 GPM
Med. Volume Motor Blade Tip Speed: 18,850 FPM at 21 GPM
High Volume Motor Blade Tip Speed: 19,000 FPM at 27 GPM
Hydraulic Hose Length: 80" Standard

MODEL NUMBER	DESCRIPTION	APPROX. MACHINE WEIGHT	SHIPPING WEIGHT	LIST PRICE
SC2660	**ROTARY CUTTER for Skid Steer Mounting - 60" Width** Single Front Chain Guard Double Rear Chain Guard	1004#	1084#	$ 3,994
SC2672	**ROTARY CUTTER for Skid Steer Mounting - 72" Width** Single Front Chain Guard Double Rear Chain Guard	1256#	1336#	$ 5,772
	You May Choose a Gauge Wheel			
-01	Single Gauge Wheel - Front Mounted	114#	114#	$ 404
	You Must Choose a Hydraulic Motor Assembly			
-11	Low Volume Motor: 11-16 GPM (60" only)			$ 1,117
-12	Medium Volume Motor: 17-21 GPM			$ 1,117
-13	High Volume Motor: 18-27 GPM			$ 1,117
	You May Pick an Extended Hose Assembly			
-31	Longer Hose Kit - 116" Length			$ 232
	You May Pick a Skid Shoe Option			
-41	Skid Shoes - Four Corners - 1/4" x 2"	15#	15#	$ 93
-42	Heavy-Duty Skid Shoes - Four Corners - 3/8" x 3"	25#	25#	$ 154
	You Must Choose With or Without an Operator Protective Door			
	If the Skid Steer that is to be operated is not equipped with an Operator Protective Door, you MUST include it.			
	(This door may take some modification to fit properly. A protective door made specifically for a particular skid steer model may be available from the skid steer manufacturer.)			
-86	Operator Protective Door	10#	10#	$ 340
-87	Without Operator Protective Door			$ 0
-90	Quick Coupler Adapter for Kubota CTL Units	3#	3#	$ 45

Gearbox HP rating is based on in field use and performance

Rotary Cutters

RCD18 Series - Utility Duty - Dual Spindle Offset

35-60 HP

Made in USA
Hitch: Cat. 1 QH with Clevis Type Lower Links
10″ Offset
All Welded Deck
Deck Height: $11^5/_8$"
Deck Thickness: 10 gauge
Cutting Capacity: $1^1/_2$"
Gearbox: 540 RPM, 60 HP Main, 45 HP Side
Beveled Gears
Cast Iron Housing
Driveline: Cat. 3 with 2-Plate Slip-Clutch
Safety Guards: Front-Rubber or Chain;
Rear-Metal Band
Blade Holder: Bar with Stump Jumper
Blades: 2 ea. ($^1/_2$" x 4" Heat Treated)
Free Swinging Alloy Steel Suction Blades
Blade Bolt: Keyed with Hardened Flat Washer &
Lock Nut
Blade Speed: 11,693 fpm
Tailwheels: 15" Laminated Tire or
4″ x 16″ Molded Rubber
Cutting Height: 2"-12"
Skids: Weld-on
Additional Skids: Bolt-on
Fits Land Pride Quick-Hitch

MODEL NUMBER	DESCRIPTION	APPROX. MACHINE WEIGHT	SHIPPING WEIGHT	LIST PRICE
	Choose One Tailwheel Package			
RCD1884-11	**18 SERIES - 84" ROTARY CUTTER** with Dual Laminated Tailwheels	816#	896#	$ 4,173
RCD1884-12	**18 SERIES - 84" ROTARY CUTTER** with Dual Solid Tailwheels	821#	901#	$ 4,279
ADD OPTION NUMBER	**You MUST Choose One Front Guard Option**			
-01	Single Front Chain Guard (326-449A)	48#	48#	$ 125
-02	Front Rubber Guard (326-342A)	23#	23#	$ 77
	Options			
-45	Extended Rear Band (326-458A)	35#	35#	$ 87
	You May Choose a Color Option			
-81	Green			
-82	Orange			
-83	Red			

Gearbox HP rating is based on in field use and performance

WARNING!

Rotary Cutters used in non-agricultural areas must be equipped with front & rear guards. The possibility of thrown objects can be hazardous to persons or property.

Rotary Cutters

RCR25 Series - 8' Medium Duty

Pull-Type: 40-110 HP; Lift Type: 50-110 HP

Cutting Width: 94"
Overall Width: 8'3/4"
Cutting Height: 2" - 12"
Cutting Capacity: 1.5"
Lift-Type: Cat. 1 and 2
Quick Hitch Adaptable
Pull-Type: Self-Leveling,
w/ Dual-Leveling Rods
Tongue Jack on Pull-Type

Deck Height: 9 5/8"
Deck Thickness: 10 Gauge
Side Skirt Thickness: 1/4"
Gearbox: 540 rpm
Beveled Gears
Cast Iron Housing
Gearbox Rating: Outboard - 60 HP
T-Box - 110 HP
Gearbox Input Shaft: 1 3/4" - 20 Spline
Output Shaft Diameter: 2"
Driveline: ASAE Cat. 4
Equal Angle Shaft on Pull-Type
Slip Protection: 4 Plate Slip-Clutch
Rubber Flex Coupler to Wing Boxes
Blade Holder: 2 ea., 3/16" Stump Jumper
Blades: 2 per Blade Holder; 1/2" x 4" Heat Treated
Free Swinging Suction Blades
Blade Tip Speed: 540 rpm 14,492 fpm
Tailwheel: Lift-Type, 2 ea. 4" x 8" x 15 1/4"
Castered Laminated Tires
Pull Type: 6" x 9" x 21" Laminated Tires, or
24" Used Aircraft Tires
Tapered Roller Bearings & Cast Iron Hub
Replaceable Skids
Optional Front Chain Guard or Rubber Guard
Optional Rear Chain Guard or Rubber Guard
Spring Shock Absorber on Axle of Pull Type

MODEL NUMBER	DESCRIPTION	APPROX. MACHINE WEIGHT	SHIPPING WEIGHT	LIST PRICE
RCR2596	25 SERIES - 8' ROTARY CUTTER - 540 rpm	1068#	1068#	$ 4,167
ADD OPTION NUMBER				
	Choose One Front Guard			
-01	Front Chain Guard (312-775A)	90#	90#	$ 189
-02	Front Rubber Guard (312-774A)	50#	50#	$ 167
	Choose One Hitch Feature			
-11	3 Point Lift-Type w/Laminated Tires and Slip-Clutch Driveline	170#	170#	$ 814
-12	Pull-Type with Equal Angle Driveline	265#	265#	$ 1,307
	Choose One Tire Feature - Pull-Type Only			
-21	21" Laminated Tires - Set of 2	150#	150#	$ 244
-24	Used Airplane Tires - Set of 2	150#	150#	$ 329
	Choose One Rear Guard			
-41	Rear Chain Guard (312-616A)	52#	52#	$ 115
-42	Rear Rubber Guard (312-618A)	32#	32#	$ 104
	Pull-Type - Choose One Height Adjustment			
-51	Ratchet Jack	15#	15#	$ 104
-52	Hydraulic Cylinder and Hoses	40#	40#	$ 408
	You May Choose a Color Option			
-81	Green			
-82	Orange			
-83	Red			

Gearbox HP rating is based on in field use and performance

WARNING!

Rotary Cutters used in non-agricultural areas must be equipped with front & rear guards. The possibility of thrown objects can be hazardous to persons or property.

Rotary Cutters

RCR25 Series - 10' Medium Duty

Pull-Type: 50-110 HP; Lift-Type: 60-110 HP

Cutting Width: 9'10"
Overall Width: 10'3 1/2"
Cutting Height: 2" - 10 1/2"
Cutting Capacity: 1.5"
Lift-Type: Cat. 2 and 3
  Quick Hitch Adaptable
Pull-Type: Self-Leveling w/Dual Leveling Rods
Tongue Jack on Pull-Type
Deck Height: 9 5/8"
Deck Thickness: 10 Gauge
  Side Skirt Thickness: 1/4"

Gearbox: 540 rpm or 1,000 rpm
  Beveled Gears
  Cast Iron Housing
  Gearbox Rating: Outboard-60 HP; T-Box - 120 HP
  Gearbox Input Shaft: 1 3/4" - 20 Spline
  Output Shaft Diameter: 2"
Driveline: ASAE Cat. 4
Constant Velocity U-Joint or
  Equal Angle Shaft on Pull-Type
Slip Protection: 540 rpm: 4 Plate Slip-Clutch
1000 rpm: 2 Plate Slip-Clutch
  Rubber Flex Coupler to Wing Boxes
Blade Holder: 2 ea., 3/16" Stump Jumper
Blades: 2 per Blade Holder; 1/2" x 4" Heat Treated
  Free Swinging Suction Blades
Blade Tip Speed: 540 rpm - 17,749 fpm
  1000 rpm - 18,035 fpm
Tailwheel: Lift-Type, 2 ea. 4" x 8" x 15 1/4"
  Castered Laminated Tires
  Pull Type: 2 ea. 6" x 9" x 21" Laminated Tires,
    or 5" x 15" Rims or
    7.75" x 15" x 24" Used Aircraft Tires
  Tapered Roller Bearings & Cast Iron Hub
Replaceable Skids
Optional Front Chain Guard or Rubber Guard
Optional Rear Chain Guard or Rubber Guard
Spring Shock Absorber on Axle of Pull Type

MODEL NUMBER	DESCRIPTION	APPROX. MACHINE WEIGHT	SHIPPING WEIGHT	LIST PRICE
RCR2510	**25 SERIES - 10' ROTARY CUTTER - 540 rpm**	1400#	1400#	$ 5,936
RCRM2510	**25 SERIES - 10' ROTARY CUTTER - 1000 rpm**	1400#	1400#	$ 5,991
ADD OPTION NO.	**Choose One Front Guard**			
-01	Front Chain Guard (312-751A)	110#	110#	$ 248
-02	Front Rubber Guard (312-752A)	70#	70#	$ 226
	Choose One Hitch Feature			
-11	3 Point w/Laminated Tires and Driveline	175#	175#	$ 873
-12	Pull-Type	210#	210#	$ 823
	Choose One Tire Feature - Pull Type Only		-	
-21	21" Laminated Tires-Set of 2	150#	150#	$ 244
-24	Used Aircraft Tires-Set of 2	150#	150#	$ 329
	Pull-Type - Choose One Input Driveline Feature			
-31	540 RPM with Equal Angle Driveline	60#	60#	$ 610
-32	540 RPM with Constant Velocity Driveline	60#	60#	$ 1,046
-31	1000 RPM with Equal Angle Driveline	60#	60#	$ 610
-32	1000 RPM with Constant Velocity Driveline	60#	60#	$ 1,046
	Choose One Rear Guard			
-41	Rear Chain Guard (312-503A)	65#	65#	$ 138
-42	Rear Rubber Guard (312-505A)	40#	40#	$ 125
	Pull-Type - Choose One Height Adjustment			
-51	Ratchet Jack	15#	15#	$ 104
-52	Hydraulic Cylinder and Hoses	40#	40#	$ 408
	You May Choose a Color Option			
-81	Green			
-82	Orange			
-83	Red			

Gearbox HP rating is based on in field use and performance

WARNING!

Rotary Cutters used in non-agricultural areas must be equipped with front & rear guards. The possibility of thrown objects can be hazardous to persons or property.

Rotary Cutters

RCR35 Series - 10' Medium Duty

Semi-Mount & Pull-Type: 50-120 HP; Lift-Type: 60-120 HP

Cutting Width: 10'
Overall Width: 10' 5"
Cutting Height: 2" - 10 1/2"
Cutting Capacity: 2"
Lift-Type, Semi-Mount: Cat. 2 and 3
Quick Hitch Adaptable
Pull-Type - Self-Leveling
Tongue Jack on Pull-Type
Deck Height: 9 5/8"
Deck Thickness: 10 Gauge
Side Skirt Thickness: 1/4"

Gearbox: 540 rpm or 1,000 rpm
Beveled Gears,
Cast Iron Housing
Gearbox Rating: Outboard-100 HP; T-Box - 120 HP
Gearbox Input Shaft: 1 3/4" - 20 Spline
Output Shaft Diameter: 2"
Driveline: ASAE Cat. 4 Constant Velocity U-Joint
or Equal Angle Shaft on Pull-Type
Slip Protection: 540 rpm: 4 Plate Slip-Clutch
1000 rpm: 2 Plate Slip-Clutch
Rubber Flex Coupler to Wing Boxes
Blade Holder: 2 ea., 3/16" Stump Jumper
Blades: 2 per Blade Holder; 1/2" x 4" Heat Treated
Free Swinging Suction Blades
Blade Tip Speed: 540 rpm - 17,291 fpm
1000 rpm - 17,569 fpm
Tailwheel:
Lift-Type, 2 ea. 4" x 8" x 15 1/4" Castered Laminated Tires
Pull Type: Single or Dual 6" x 9" x 21" Laminated Tires,
or 7.75" x 15" x 24" Used Airplane Tires
Semi-Mount: 6"x 9" x 24" Laminated Tires
Tapered Roller Bearings & Cast Iron Hub
Replaceable Skids
Optional Front Chain Guard or Rubber Deflector
Optional Rear Chain Guard or Rubber Guard
Spring Shock Absorber on Axle of Pull Type

MODEL NUMBER	DESCRIPTION	APPROX. MACHINE WEIGHT	SHIPPING WEIGHT	LIST PRICE
RCR3510	35 SERIES - 10' ROTARY CUTTER - 540 rpm	1825#	1825#	$ 7,996
RCRM3510	35 SERIES - 10' ROTARY CUTTER - 1000 rpm	1825#	1825#	$ 8,055
ADD_ OPTION NO.	**Choose One Front Guard**			
-01	Front Chain Guard (312-502A)	120#	120#	$ 272
-02	Front Rubber Guard (312-504A)	80#	80#	$ 249
	Choose One For 3-Point or Semi-Mount			
-11	3 Point w/Laminated Tires and Driveline	175#	175#	$ 889
-13	Semi-Mount Hitch w/Laminated Tires and Driveline	220#	220#	$ 1,481
	Choose One For Pull-Type			
-12-31	Pull Type w/ Equal Angle Input Driveline-2 wheel axle	210#	210#	$ 1,473
-12-32	Pull Type w/ Constant Velocity Input Driveline-2 wheel axle	210#	210#	$ 1,965
-14-31	Pull Type w/ Equal Angle Input Driveline-4 wheel axle	220#	220#	$ 1,566
-14-32	Pull Type w/ Constant Velocity Input Driveline-4 wheel axle	220#	220#	$ 2,058
	Choose One Tire Feature - Pull-Type Only			
-21	21" Laminated Tires - Set of 2	150#	150#	$ 255
-24	Used Airplane Tires - Set of 2	150#	150#	$ 342
-25	21" Laminated Tires - Set of 4	260#	260#	$ 477
-27	Used Airplane Tires - Set of 4	260#	260#	$ 654
-28	Used Airplane Tires - Foam Filled - Set of 4	313#	313#	$ 927
	Choose One Rear Guard			
-41	Rear Chain Guard (312-503A)	65#	65#	$ 138
-42	Rear Rubber Guard (312-505A)	40#	40#	$ 125
	Choose One Height Adjustment - Pull-Type or Semi-Mount Only			
-51	Ratchet Jack	15#	15#	$ 104
-52	Hydraulic Cylinder and Hoses	40#	40#	$ 408
	You May Choose a Color Option			
-81	Green			
-82	Orange			
-83	Red			

WARNING!

Rotary Cutters used in non-agricultural areas must be equipped with front & rear guards. The possibility of thrown objects can be hazardous to persons or property.

Gearbox HP rating is based on in field use and performance

Rotary Cutters

RCF30 Series - 8' Medium Duty

Semi-Mount & Pull-Type: 40-110 HP; Lift Type: 50-110 HP

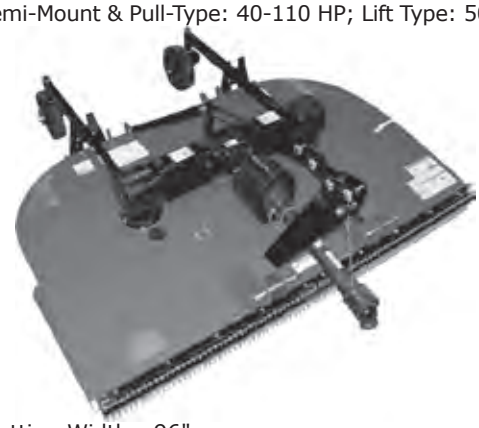

Cutting Width: 96"
Overall Width: 8'7"
Cutting Height: 2" - 12"
Cutting Capacity: 2.5"
Lift-Type & Semi-Mount: Cat. 1 and 2, Quick Hitch Adaptable
Pull-Type: Self-Leveling,
w/ Dual-Leveling Rods

Tongue Jack on Pull-Type
Deck Height: 11 1/4"
Deck Thickness: 10 Gauge
Side Skirt Thickness: 1/4"
Gearbox: 540 rpm
Beveled Gears, Cast Iron Housing
Gearbox Rating: Outboard - 110 HP
T-Box - 160 HP
Gearbox Input Shaft: 1 3/4" - 20 Spline
Output Shaft Diameter: 2"
Driveline: ASAE Cat. 4
Equal Angle Driveline on Pull-Type
Slip Protection: 4 Plate Slip-Clutch
Rubber Flex Coupler to Outboard Boxes
Blade Holder: 2 ea., 3/16" Stump Jumper
Blades: 2 per Blade Holder; 1/2" x 4" Heat Treated
Free Swinging Suction Blades
Blade Tip Speed: 540 rpm 16,360 fpm
Tailwheels: See selections below
Tapered Roller Bearings & Cast Iron Hub
Replaceable Skids
Spring Shock Absorber on Pull-Type & Semi-Mount Axle

MODEL NUMBER	DESCRIPTION	APPROX. MACHINE WEIGHT	SHIPPING WEIGHT	LIST PRICE
RCF3096	**30 SERIES - 8' ROTARY CUTTER - 540 rpm**	1200#	1200#	$ 4,109
ADD OPTION NUMBER	**Choose One Front Guard**			
-01	Front Single Chain Guard (326-582A)	70#	70#	$ 247
-02	Front Rubber Guard (326-573A)	26#	26#	$ 178
-03	Front Double Chain Guard (326-583A)	99#	99#	$ 325
	Choose One Hitch Feature			
-11	3-Point, 15" Laminated Tires w/Dual Beam Axles	350#	350#	$ 1,625
-12	Pull-Type with Single Spindle HD Toolbar Axle	560#	560#	$ 1,890
-13	Semi-Mount, HD Toolbar Axle w/two 21" Laminated	524#	524#	$ 2,200
-14	Pull-type with Dual Spindle HD Toolbar Axle	586#	586#	$ 1,995
-16	Semi-Mount, HD Toolbar Axle w/two 15" Laminated	420#	420#	$ 1,800
-17	3-Point, HD Toolbar Axle w/two 15" Laminated	420#	420#	$ 1,950
-18	3-Point, HD Toolbar Axle w/two 21" Laminated	524#	524#	$ 2,950
	Choose One Tire Feature - Pull-Type Only			
-20	21" Laminated Tires - Set of 2	139#	139#	$ 270
-21	29" Used Aircraft Tires - Set of 2	160#	160#	$ 395
-24	24" Foam Filled Used Aircraft Tires - Set of 2	175#	175#	$ 665
-25	21" Laminated Tires - Set of 4	278#	278#	$ 540
-27	29" Used Aircraft Tires - Set of 4	320#	320#	$ 795
-28	24" Foam Filled Used Aircraft Tires - Set of 4	350#	350#	$ 1,325
	Choose One Driveline Feature - Pull-Type Only			
-31	Equal Angle Driveline - 540 rpm	75#	75#	$ 660
-32	Constant Velocity Driveline - 540 rpm	75#	75#	$ 1,250
	Choose One Rear Guard			
-41	Rear Single Chain Guard (326-535A)	28#	28#	$ 133
-42	Rear Rubber Guard (327-130A)	11#	11#	$ 120
-43	Rear Double Chain Guard (326-536A)	40#	40#	$ 330
	Choose One Height Adjustment - Not Needed with Option 11			
-51	Ratchet Jack	20#	20#	$ 110
-52	Hydraulic Cylinder and Hoses - Pull-Type or Semi-Mount Only	40#	40#	$ 408
-53	Hydraulic Cylinder and Hoses - 3-Point	40#	40#	$ 408
	You May Choose a Color Option			
-81	Green			
-82	Orange			
-83	Red			

Rotary Cutters

RCF(M)30 Series - 10' Medium Duty

Semi-Mount & Pull-Type: 50-110 HP; Lift-Type: 60-110 HP

Cutting Width: 10'
Overall Width: 10' 6 1/2"
Cutting Height: 2" - 12"
Cutting Capacity: 2 1/2"
Lift-Type & Semi-Mount: Cat. 2 and 3,
Quick Hitch Adaptable
Pull-Type: Self-Leveling
w/Dual Leveling Rods
Tongue Jack on Pull-Type
Deck Height: 11 1/2"
Deck Thickness: 10 Gauge
Side Skirt Thickness: 1/4"
Gearbox: 540 rpm or 1,000 rpm
Beveled Gears
Cast Iron Housing
Gearbox Rating: Outboard-110 HP; T-Box - 160 HP
Gearbox Input Shaft: 1 3/4" - 20 Spline
Output Shaft Diameter: 2"

Driveline: ASAE Cat. 4
Constant Velocity U-Joint or
Equal Angle Shaft on Pull-Type
Slip Protection: 540 rpm: 4 Plate Slip-Clutch
1000 rpm: 2 Plate Slip-Clutch
Rubber Flex Coupler to Outboard Boxes
Blade Holder: 2 ea., 3/16" Stump Jumper
Blades: 2 per Blade Holder; 1/2" x 4" Heat Treated
Free Swinging Suction Blades
Blade Tip Speed: 540 rpm - 17,100 fpm
1000 rpm - 17,300 fpm
Tailwheels: See selections below
Tapered Roller Bearings & Cast Iron Hub
Replaceable Skids
Spring Shock Absorber on Pull-Type & Semi-Mount Axle

MODEL NUMBER	DESCRIPTION		APPROX. MACHINE WT	SHIPPING WEIGHT	LIST PRICE
RCF3010	**30 SERIES - 10' ROTARY CUTTER - 540 rpm**		1587#	1587#	$ 5,510
RCFM3010	**30 SERIES - 10' ROTARY CUTTER - 1000 rpm**		1587#	1587#	$ 5,510
ADD OPTION NO.	**Choose One Front Guard**				
-01	Front Single Chain Guard	(327-090A)	87#	87#	$ 275
-02	Front Rubber Guard	(327-096A)	31#	31#	$ 220
-03	Front Double Chain Guard	(327-093A)	124#	124#	$ 365
	Choose One for 3-Point or Semi-Mount				
-11	3 Point w/15" Laminated Tires and Driveline		467#	467#	$ 1,681
-13	Semi-Mount w/21" Laminated Tires		504#	504#	$ 2,200
-15	3 Point w/21" Laminated Tires		604#	604#	$ 2,150
-16	Semi-Mount w/15" Laminated Tires		402#	402#	$ 1,516
	Pull-Type - Choose One Input Driveline Feature				
-12-31	Pull-Type 540 RPM with Equal Angle Driveline		543#	543#	$ 2,321
-12-32	Pull-Type 540 RPM with Constant Velocity Driveline		617#	617#	$ 2,726
-14-31	Pull-Type 1000 RPM with Equal Angle Driveline		568#	568#	$ 2,595
-14-32	Pull-Type 1000 RPM with Constant Velocity Driveline		642#	642#	$ 3,000
	Choose One Tire Feature - Pull Type Only				
-20	21" Laminated Tires - Set of 2		139#	139#	$ 270
-21	29" Used Aircraft Tires - Set of 2		160#	160#	$ 395
-24	24" Foam Filled Used Aircraft Tires - Set of 2		175#	175#	$ 665
-25	21" Laminated Tires - Set of 4		278#	278#	$ 540
-27	29" Used Aircraft Tires - Set of 4		320#	320#	$ 795
-28	24" Foam Filled Used Aircraft Tires - Set of 4		350#	350#	$ 1,325
	Choose One Rear Guard				
-41	Rear Single Chain Guard	(326-462A)	35#	35#	$ 155
-42	Rear Rubber Guard	(326-525A)	7#	7#	$ 140
-43	Rear Double Chain Guard	(326-463A)	50#	50#	$ 330
	Choose One Height Adjustment				
-51	Ratchet Jack - Pull-type, Semi-Mount, 3-Point		20#	20#	$ 110
-52	Hydraulic Cylinder and Hoses - Pull-Type, Semi-Mount		40#	40#	$ 408
-53	Hydraulic Lift - 3 Point only		45#	45#	$ 408
	You May Choose a Color Option				
-81	Green				
-82	Orange				
-83	Red				

Gearbox HP rating is based on in field use and performance

WARNING!

Rotary Cutters used in non-agricultural areas must be equipped with front & rear guards. The possibility of thrown objects can be hazardous to persons or property.

Rotary Cutters

RCF(M)36 Series - 8' Heavy Duty

Semi-Mount & Pull-Type: 40-120 HP ; Lift Type: 50-120 HP

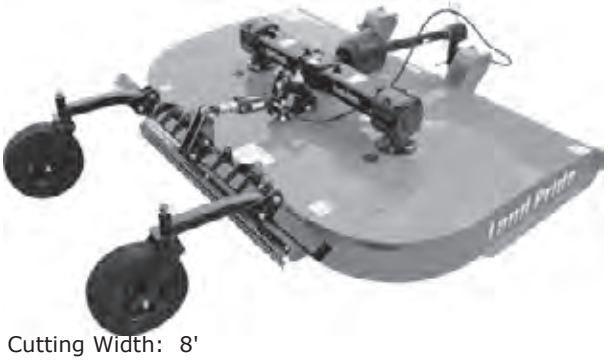

Cutting Width: 8'
Overall Width: 8' 7"
Cutting Height: 2" - 12"
Cutting Capacity: 3"
Lift-Type, Semi-Mount: Cat. 1 & 2, Quick Hitch Adaptable
Pull-Type: Self-Leveling w/ Dual-Leveling Rods
Tongue Jack on Pull-Type
Deck Height: 13"
Deck Thickness: 10 Gauge
Side Skirt Thickness: 1/4"

Gearbox: 540 rpm or 1,000 rpm
Beveled Gears, Cast Iron Housing
Gearbox Rating: Outboard - 205 HP; T-Box - 210 HP
Gearbox Input Shaft: 1 3/4" - 20 Spline
Output Shaft Diameter: 2 3/8"
Driveline: ASAE Cat. 4
Equal Angle Shaft on Pull-Type
Slip Protection: 540 rpm: 4 Plate Slip-Clutch
1000 rpm: 2 Plate Slip-Clutch
Rubber Flex Coupler to Wing Boxes
Blade Holder: 2 ea., 3/16" Stump Jumper
Blades: 2 per Blade Holder; 1/2" x 4" Heat Treated
Free Swinging Suction Blades
Blade Tip Speed: 540 rpm - 17,100 fpm
1000 rpm - 17,375 fpm
Tailwheels: See selections below
Tapered Roller Bearings & Cast Iron Hub
Replaceable Skids
Spring Shock Absorber on Pull-Type & Semi-Mount Axle

MODEL NUMBER	DESCRIPTION	APPROX. MACHINE WT	SHIPPING WEIGHT	LIST PRICE
RCF3696	**36 SERIES - 8' ROTARY CUTTER - 540 rpm**	1393#	1393#	$ 5,010
RCFM3696	**36 SERIES - 8' ROTARY CUTTER - 1000 rpm**	1393#	1393#	$ 5,010
ADD OPTION NUMBER	**Choose One Front Guard**			
-01	Front Single Chain Guard (326-541A)	72#	72#	$ 247
-02	Front Rubber Guard (326-543A)	32#	32#	$ 178
-03	Front Double Chain Guard (326-542A)	100#	100#	$ 325
	Choose One Hitch Feature			
-11	3-Point, 15" Laminated with Dual Beam Axles	346#	346#	$ 1,600
-12	Pull-Type with Single Spindle HD Toolbar Axle	560#	560#	$ 1,775
-13	Semi-Mount, HD Toolbar Axle w/two 21" Laminated	524#	524#	$ 2,150
-14	Pull-Type with Dual Spindle HD Toolbar Axle	586#	586#	$ 1,890
-16	Semi-Mount, HD Toolbar Axle w/two 15" Laminated	420#	420#	$ 1,800
-17	3-Point, HD Toolbar Axle w/two 15" Laminated	420#	420#	$ 1,990
-18	3-Point, HD Toolbar Axle w/two 21" Laminated	524#	524#	$ 2,990
	Choose One Tire Feature - Pull-Type Only			
-20	21" Laminated Tires - Set of 2	139#	139#	$ 270
-21	29" Used Aircraft Tires - Set of 2	160#	160#	$ 395
-24	24" Foam Filled Used Aircraft Tires - Set of 2	175#	175#	$ 665
-25	21" Laminated Tires - Set of 4	278#	278#	$ 540
-27	29" Used Aircraft Tires - Set of 4	320#	320#	$ 795
-28	24" Foam Filled Used Aircraft Tires - Set of 4	350#	350#	$ 1,325
	Choose One Driveline Feature - Pull-Type Only			
-31	Equal Angle Driveline - 540 or 1000 rpm	75#	75#	$ 725
-32	Constant Velocity Driveline - 540 or 1000 rpm	75#	75#	$ 1,315
	Choose One Rear Guard			
-41	Rear Single Chain Guard (326-535A)	27#	27#	$ 133
-42	Rear Rubber Guard (326-545A)	5#	5#	$ 120
-43	Rear Double Chain Guard (326-536A)	40#	40#	$ 330
	Choose One Height Adjustment- Not Needed with Option 11			
-51	Ratchet Jack	20#	20#	$ 110
-52	Hydraulic Cylinder and Hoses - Pull-Type or Semi-Mount Only	40#	40#	$ 408
-53	Hydraulic Cylinder and Hoses - 3-Point, HD Tool Bar Axle	40#	40#	$ 408
	You May Choose a Color Option			
-81	Green			
-82	Orange			
-83	Red			

Rotary Cutters

RCF(M)36 Series - 10' Heavy Duty

Semi-Mount & Pull-Type: 50-120 HP; Lift-Type: 60-120 HP

Cutting Width: 10'
Overall Width: 10' 6 1/2"
Cutting Height: 2" - 12"
Cutting Capacity: 3"
Lift-Type, Semi-Mount: Cat. 2 and 3
  Quick Hitch Adaptable
Pull-Type - Self-Leveling w/ Dual-Leveling Rods
Tongue Jack on Pull-Type
Deck Height: 13"
Deck Thickness: 10 Gauge
  Side Skirt Thickness: 1/4"
Gearbox: 540 rpm or 1,000 rpm
  Beveled Gears, Cast Iron Housing
  Gearbox Rating: Outboard-205 HP; T-Box - 210 HP
  Gearbox Input Shaft: 1 3/4" - 20 Spline
  Output Shaft Diameter: 2 3/8"

Driveline: ASAE Cat. 4 Constant Velocity U-Joint
  or Equal Angle Shaft on Pull-Type
Slip Protection: 540 rpm: 4 Plate Slip-Clutch
  1000 rpm: 2 Plate Slip-Clutch
  Rubber Flex Coupler to Outboard Boxes
Blade Holder: 2 ea., 3/16" Stump Jumper
Blades: 2 per Blade Holder; 1/2" x 4" Heat Treated
  Free Swinging Suction Blades
Blade Tip Speed: 540 rpm - 17,150 fpm
  1000 rpm - 17,425 fpm
Tailwheels: See selections below
  Tapered Roller Bearings & Cast Iron Hub
Replaceable Skids
Spring Shock Absorber on Pull-Type & Semi-Mount Axle

MODEL NUMBER	DESCRIPTION		APPROX. MACHINE WT	SHIPPING WEIGHT	LIST PRICE
RCF3610	**36 SERIES - 10' ROTARY CUTTER - 540 rpm**		1669#	1669#	$ 7,000
RCFM3610	**36 SERIES - 10' ROTARY CUTTER - 1000 rpm**		1669#	1669#	$ 7,000
ADD_ OPTION NO.	**Choose One Front Guard**				
-01	Front Single Chain Guard	(326-437A)	89#	89#	$ 275
-02	Front Rubber Guard	(326-524A)	39#	39#	$ 220
-03	Front Double Chain Guard	(326-440A)	125#	125#	$ 365
	Choose One For 3-Point or Semi-Mount				
-11	3-Point w/15" Laminated Tires and Driveline		497#	497#	$ 1,950
-13	Semi-Mount Hitch w/21" Laminated Tires and Driveline		539#	539#	$ 2,450
-15	3-Point w/21" Laminated Tires and Driveline		601#	601#	$ 2,650
-16	Semi-Mount w/15" Laminated Tires and Driveline		436#	436#	$ 1,800
	Choose One For Pull-Type				
-12-31	Pull-Type w/ Equal Angle Input Driveline - Single wheel axle		577#	577#	$ 2,620
-12-32	Pull-Type w/ Constant Velocity Input Driveline - Single wheel axle		653#	653#	$ 2,965
-14-31	Pull-Type w/ Equal Angle Input Driveline - Dual wheel axle		605#	605#	$ 2,745
-14-32	Pull-Type w/ Constant Velocity Input Driveline - Dual wheel axle		681#	681#	$ 3,090
	Choose One Tire Feature - Pull-Type Only				
-20	21" Laminated Tires - Set of 2		139#	139#	$ 270
-21	29" Used Aircraft Tires - Set of 2		160#	160#	$ 395
-24	24" Foam Filled Used Aircraft Tires - Set of 2		175#	175#	$ 665
-25	21" Laminated Tires - Set of 4		278#	278#	$ 540
-27	29" Used Aircraft Tires - Set of 4		320#	320#	$ 795
-28	24" Foam Filled Used Aircraft Tires - Set of 4		350#	350#	$ 1,325
	Choose One Rear Guard				
-41	Rear Single Chain Guard	(326-462A)	35#	35#	$ 155
-42	Rear Rubber Guard	(326-525A)	7#	7#	$ 140
-43	Rear Double Chain Guard	(326-463A)	50#	50#	$ 330
	Choose One Height Adjustment				
-51	Ratchet Jack- Pull-Type, Semi-Mount, 3-Point		20#	20#	$ 110
-52	Hydraulic Cylinder and Hoses-Pull-type, Semi-Mount		40#	40#	$ 408
-53	Hydrauclic Cylinder and Hoses - 3-Point only		45#	45#	$ 408
	You May Choose a Color Option				
-81	Green				
-82	Orange				
-83	Red				

Rotary Cutters - 12'

RC2512 - 12' Medium Duty Smooth Top

40-75 HP

Working Width: 12'
Transport Width: 7'11"
Overall Width: 12'7"
Overall Length: 13'3"
Hitch: Pull-Type, Self-Leveling Hitch & Clevis
Hitch Weight: 793 lbs.
Tongue Jack
Cutting Height: 1 1/2" - 12"
Cutting Capacity: 1 1/2"
Deck Height: 11"
Deck Thickness: 10 Gauge
Side Skirt Thickness: 3/16 Plate
Gearbox: 540 rpm: 160 HP Divider; 75 HP Center & Wings

Gearbox Input Shaft: 1 3/8" 6 Spline
Gearbox Output Shaft: 1 1/2"
Input Driveline: Constant Velocity U-Joint, Cat. 4
Connecting Driveline: Cat. 3 Slip-Clutch
Stump-Jumper:10 Gauge, Round, Dish Shaped
Blades: 2 per Section, 1/2" x 3" Heat Treated
Free Swinging Alloy Steel with Uplift
Blade Bolt: Keyed with Hardened Flatwasher
& Lock Nut
Blade Overlap: 6"
Blade Speed: Center: 16,500 fpm,Wings: 16,000 fpm
Wheels: 4
20.5" x 6.75" Used Aircraft Tires or
6" x 9" x 21" Laminated Tires
Tapered Roller Bearings & Cast Iron 5-Bolt Hubs
with 1 3/4" Shaft
Wing Transport Locks
Wing Hydraulics: 2" x 8" Cylinder, Hoses & Fittings
Height Adjustments: 2 1/2" x 8" Cylinder, Hose, Fittings
& Stroke Control Spacers
Skid Shoes: Wings & Center, Replaceable
Front and Rear Chain Shielding
Blade Rotation: L-CCW, C-CCW, R-CW

MODEL NUMBER	DESCRIPTION	APPROX. MACHINE WEIGHT	SHIPPING WEIGHT	LIST PRICE
RC2512-20	**12' ROTARY CUTTER - 540 rpm** Front and Rear Chain Guards 4 ea. Aircraft Tires Constant Velocity Input Driveline	2,540#	2,540#	$ 12,348
RC2512-21	**12' ROTARY CUTTER - 540 rpm** Front and Rear Chain Guards 4 ea. Laminated Tires Constant Velocity Input Driveline	2,712#	2,712#	$ 12,348

ADD OPTION NO.	COLOR OPTIONS
-81	Green
-82	Orange
-83	Red

ACCESSORY AVAILABLE THROUGH THE PARTS DEPARTMENT

330-760K	Hydraulic Kit for raising wings independently of the cutting height cylinder Requires 2 sets of hydraulic outlets	$ 72

Gearbox HP rating is based on in field use and performance

WARNING!

Rotary Cutters used in non-agricultural areas must be equipped with front & rear guards. The possibility of thrown objects can be hazardous to persons or property.

Rotary Cutters - 15'

RETURN TO INDEX

5 YEAR Limited Gearbox Warranty

RC3615 - 15' Medium Duty Smooth Top

50-160 HP

Plainsman

Working Width: 15'
Transport Width: 8' Minimum
Overall Width: 15'8"
Overall Length: 15'6"
Hitch: Pull-Type, Self-Leveling Hitch & Clevis
Tongue Jack
Cutting Height: 2" - 14"
Cutting Capacity: $2^1/_2$"
Deck Height: 12"
Deck Thickness: 10 Gauge
Side Skirt Thickness: $^1/_4$"
Gearbox: 540 rpm: 160 HP Divider; 110 HP Center & Wings
1000 rpm: 160 HP Divider; 110 HP Center & Wings

Gearbox Input Shaft: $1^3/_4$" 20 Spline
Gearbox Output Shaft: 2"
Input Driveline: Constant Velocity U-Joint Cat. 6, Splined or Conventional Cat. 5, Star Profile; 540 or 1000 RPM
Connecting Driveline: Cat. 4 Slip-Clutch
Stump-Jumper: $^3/_{16}$", Round, Dish Shaped
Blades: 2 per Section, $^1/_2$" x 4" Heat Treated Free Swinging Alloy Steel with Uplift
Blade Bolt: Keyed with Hardened Flatwasher & Lock Nut
Blade Overlap: 6"
Blade Speed:
540 rpm: Center: 15,268 fpm,Wings: 15,000 fpm
1000 rpm: Center: 15,578 fpm, Wings: 14,620 fpm
4, 6 or 8 Wheels, with Spring-Cushioned Center Axle
Wheel Options:
6" x 21" Laminated Tires
29" x 7.75" x 15" Used Aircraft Tires w/wo foam
Tapered Roller Bearings & Cast Iron 5-Bolt Hubs with $1^3/_4$" Shaft
Wing Transport Locks
Wing Hydraulics: $2^1/_2$" x 12" Cylinder, Hoses & Fittings
Height Adjustments: 3" x 8" Cylinder, Hose, Fittings & Stroke Control Spacers
Skid Shoes: Wings & Center, Replaceable
Optional Front and Rear Shielding: Single or Double Chain, or Rubber
Blade Rotation: L-CW, C-CCW, R-CCW

MODEL NUMBER	DESCRIPTION	APPROX. MACHINE WEIGHT	SHIPPING WEIGHT	LIST PRICE
RC3615-01123470	**15' ROTARY CUTTER - 540 rpm** Front Chain Guard (01) 6 ea. Laminated Tires, Dual Axle (12) Constant Velocity Input Driveline, Cat. 6 (34) Standard Clevis Hitch (70)	3620#	3620#	$ 15,221
RC3615-0112344170	**15' ROTARY CUTTER - 540 rpm** Front Chain Guard (01) 6 ea. Laminated Tires, Dual Axle (12) Constant Velocity Input Driveline, Cat. 6 (34) Rear Chain Guard (41) Standard Clevis Hitch (70)	3730#	3730#	$ 15,516
RC3615-0114344170	**15' ROTARY CUTTER - 540 rpm** Front Chain Guard (01) 6 ea. Used Airplane Tires (14) Constant Velocity Input Driveline, Cat. 6 (34) Rear Chain Guard (41) Standard Clevis Hitch (70)	3882#	3882#	$ 15,791

Gearbox HP rating is based on in field use and performance

See pg. 41 for optional pricing and color options

WARNING!

Rotary Cutters used in non-agricultural areas must be equipped with front & rear guards. The possibility of thrown objects can be hazardous to persons or property.

Rotary Cutters - 15'

RETURN TO INDEX

5 YEAR Limited Gearbox Warranty

RC3615 - 15' Medium Duty

50-160 HP

TO BUILD A UNIT NOT LISTED IN THE CONFIGURED UNIT PRICING, USE THE FOLLOWING.

MODEL NUMBER	DESCRIPTION	APPROX. MACHINE WEIGHT	LIST PRICE
RC3615	15' ROTARY CUTTER - 540 rpm	2764#	$ 11,294
RCM3615	15' ROTARY CUTTER - 1000 rpm	2764#	$ 11,362
ADD OPTION NUMBER	**Choose One Front Guard**		
-01	Single Row Chain Guard (330-481A)	200#	$ 314
-02	Rubber Guard (330-482A)	130#	$ 260
-03	Double Row Chain Guard (330-483A)	260#	$ 582
	You MUST Choose One Tire Option		
-12	6 ea. Laminated Tailwheels	504#	$ 2,559
-14	6 ea. Used Airplane Tires	656#	$ 2,834
-16	4 ea. Laminated Tailwheels	342#	$ 2,149
-18	4 ea. Used Airplane Tires	494#	$ 2,330
-23	6 ea. Used Foam Filled Airplane Tires	736#	$ 3,246
	If 540 RPM - Choose One Driveline Package - Main Driveline - 1-3/8" - 6 Spline		
-31	Main: Conventional U-Joint Wing: Cat. 4 Slip-Clutch	42#	$ 780
-34	Main: Constant Velocity U-Joint Wing: Cat. 4 Slip-Clutch	75#	$ 1,054
	If 1000 RPM - Choose One Driveline Package - Main Driveline - 1-3/8" - 21 Spline		
-31	Main: Conventional U-Joint Wing: Cat. 4 Slip-Clutch	42#	$ 780
-34	Main: Constant Velocity U-Joint Wing: Cat. 4 Slip-Clutch	75#	$ 1,054
	Choose One Rear Guard		
-41	Single Row Chain Guard (330-493A)	110#	$ 295
-42	Rubber Guard (330-494A)	55#	$ 255
-43	Double Row Chain Guard (330-495A)	170#	$ 398
	You May Choose a Winch Option		
-51	Used to fold wings in a hydraulic failure (330-295A)	40#	$ 529
	You Must Choose a Deck Ring Option		
-60	No Deck Rings	0#	$ 0
-61	Deck Rings	200#	$ 434
	You Must Choose a Hitch Clevis Option		
-70	Standard Clevis - Up and Down Swivel	77#	$ 0
-71	Double Swivel Clevis - Up, Down and Side to Side	52#	$ 118
-72	Bar-tite Clevis - Bolts & Clamps to Drawbar - Up & Down & Side to Side Swivel	68#	$ 263
	You May Choose a Color Option		
-81	Green		
-82	Orange		
-83	Red		
318-316A	Hydraulic Wing Control Kit to hydraulically control each wing independently	8#	$ 86

Gearbox HP rating is based on in field use and performance

WARNING!

Rotary Cutters used in non-agricultural areas must be equipped with front & rear guards. The possibility of thrown objects can be hazardous to persons or property.

RETURN TO INDEX

Rotary Cutters - 20'

7 YEAR Limited Gearbox Warranty

RC3620 - 20' Medium Duty

70-160 HP

Plainsman

Working Width: 20'
Transport Width: 9' 11" Minimum
Overall Width: 20' 10"
Overall Length: 19' 3"
Hitch: Pull-Type
Tongue Jack
Cutting Height: 2" - 12"
Cutting Capacity: 2"
Deck Height: 13"
Deck Thickness: 10 Gauge
Side Skirt Thickness: 1/4"
Gearbox: 540 rpm: Splitter 250 HP;
Wings & Center 130 HP Gearbox
1000 rpm: Splitter 250 HP;
Wings & Center 130 HP Gearbox

Gearbox Input Shaft: 1 3/4" 20 Spline
Gearbox Output Shaft: 2"
Input Driveline: Constant Velocity U-Joint Cat. 6, Splined
or Conventional Cat. 5, Star Profile;
540 or 1000 RPM
Connecting Driveline: Cat. 4, Slip-Clutch
Stump-Jumper: 10 Gauge, Round, Dish Shaped
Blades: 2 per Section, 1/2" x 4" Heat Treated
Free Swinging Alloy Steel with Uplift
Blade Bolt: Keyed with Hardened Flatwasher & Lock Nut
Blade Overlap: 6"
Blade Speed:
540 rpm: Center: 16,000 fpm, Wings: 16,000 fpm
1000 rpm: Center: 16,500 fpm, Wings: 16,500 fpm
6 or 8 Wheel Option, with Spring-Cushioned Center Axle
Tire Options:
6" x 21" Laminated Tires
29" x 9 x 15 Used Aircraft Tires
Tapered Roller Bearings & Cast Iron 5-Bolt Hubs w/1 3/4" Shaft
Wing Transport Locks
Wing Hydraulics: 3" x 12" Cylinder, Hoses & Fittings
Height Adjustments: 3-1/2" x 8" Cylinder, Hose, Fittings
& Stroke Control Spacers
Skid Shoes: Wings Reversible & Center, Both Replaceable
Optional Front and Rear Shielding:
Single or Double Chain
Optional Deck Rings - 1/2" x 3" Fully Welded

For 1000 RPM, change prefix to RCM

MODEL NUMBER	DESCRIPTION	APPROX. MACHINE WEIGHT	LIST PRICE
RC3620-011232416070	**20' ROTARY CUTTER - 540 rpm** Single Front Chain Guard (01) 6 ea. Laminated Tires, Dual Axle (12) Constant Velocity Input Driveline, Cat. 6 (32) Single Rear Chain Guard (41) No Deck Rings (60) Standard Clevis (70)	6280#	$ 25,406
RC3620-021232426070	**20' ROTARY CUTTER - 540 rpm** Double Front Chain Guard (03) 6 ea. Laminated Tires, Dual Axle (12) Constant Velocity Input Driveline, Cat. 6 (32) Double Rear Chain Guard (43) No Deck Rings (60) Standard Clevis (70)	6442#	$ 25,674
RC3620-011432416070	**20' ROTARY CUTTER - 540 rpm** Single Front Chain Guard (01) 6 ea. Used Airplane Tires, Dual Axle (14) Constant Velocity Input Driveline, Cat. 6 (32) Single Rear Chain Guard (41) No Deck Rings (60) Standard Clevis (70)	6680#	$ 25,944
RC3620-021432426070	**20' ROTARY CUTTER - 540 rpm** Double Front Chain Guard (03) 6 ea. Used Airplane Tires, Dual Axle (14) Constant Velocity Input Driveline, Cat. 6 (32) Double Front Chain Guard (43) No Deck Rings (60) Standard Clevis (70)	6594#	$ 26,212

See pg. 43 for optional pricing and color option
See pg. 42 for available hitches

Gearbox HP rating is based on in field use and performance

WARNING!

Rotary Cutters used in non-agricultural areas must be equipped with front & rear guards. The possibility of thrown objects can be hazardous to persons or property.

Rotary Cutters - 20'

RC3620 - 20' Medium Duty

70-160 HP

TO BUILD A UNIT NOT LISTED IN CONFIGURED UNIT PRICING, USE THE FOLLOWING.

MODEL NUMBER	DESCRIPTION	APPROX. MACHINE WT	LIST PRICE
RC3620	**20' ROTARY CUTTER - 540 rpm**	5137#	$ 21,930
RCM3620	**20' ROTARY CUTTER - 1000 rpm**	5137#	$ 21,930
ADD OPTION NO.	**Choose One Front Guard**		
-01	Single Row Chain Guard (330-817A)	211#	$ 513
-03	Double Row Chain Guard (330-818A)	233#	$ 685
	Choose One Wheel & Axle Assembly		
-12	6 ea. Laminated Tail Wheels with Dual Axle	661#	$ 1,381
-14	6 ea. Used Airplane Tires with Dual Axle	933#	$ 1,919
-20	8 ea. Laminated Tail Wheels with Dual Axle	801#	$ 1,789
-22	8 ea. Used Airplane Tires with Dual Axle	1013#	$ 2,519
	Choose One Driveline Package		
-31	Conventional U-Joint Main - 540 rpm or 1000 rpm - Cat. 4 Wing	42#	$ 1,175
-32	Constant Velocity U-Joint Main - 540 rpm or 1000 rpm - Cat. 4 Wing	75#	$ 1,215
-33	Conventional U-Joint Main - 540 rpm or 1000 rpm - Cat. 5 Wing	42#	$ 1,344
-34	Constant Velocity Main - 540 rpm or 1000 rpm - Cat. 5 Wing	75#	$ 1,716
	Choose One Rear Guard		
-41	Single Row Chain Guard (330-819A)	119#	$ 367
-43	Double Row Chain Guard (330-820A)	150#	$ 463
	You Must Choose Deck Rings or No Deck Rings		
-60	No Deck Rings	0#	$ 0
-61	Deck Rings	200#	$ 894
	You Must Choose A Hitch Clevis Option		
-70	Standard Clevis	77#	$ 0
-71	Swivel Hitch	53#	$ 118
-72	Bar Tite Hitch	68#	$ 263
-73	Pintle Hitch	20#	$ 118
-74	Ball Hitch	20#	$ 118
	You May Choose A Color Option		
-81	Green		
-82	Orange		
-83	Red		
-86	CAT Yellow		

Gearbox HP rating is based on in field use and performance

Rotary Cutters- Offset

RC3614 - 14' Medium Duty Offset

70-250 HP

Plainsman

Working Width: 14'
Transport Width: 8' 9"
Overall Width: 15'
Overall Length: 19' 3"
Hitch: Pull-Type
Tongue Jack
Cutting Height: 2" - 12"
Cutting Capacity: 2"
Deck Height: 13"
Deck Thickness: 10 Gauge
Side Skirt Thickness: 1/4"
Gearbox: 540 rpm: Splitter 250 HP;
Wing & Center 130 HP
1000 rpm: Splitter 250 HP;
Wing & Center 130 HP

Gearbox Input Shaft: 1 3/4" 20 Spline
Gearbox Output Shaft: 2"
Weightbox on Left Side
Input Driveline: Constant Velocity U-Joint Cat. 6, Splined
or Conventional Cat. 5, Star Profile;
540 or 1000 RPM
Connecting Driveline: Cat. 4, Slip-Clutch
Stump-Jumper: 10 Gauge, Round, Dish Shaped
Blades: 2 per Section, 1/2" x 4" Heat Treated
Free Swinging Alloy Steel with Uplift
Blade Bolt: Keyed with Hardened Flatwasher & Lock Nut
Blade Overlap: 6"
Blade Speed:
540 rpm: Center: 16,000 fpm, Wing: 16,000 fpm
1000 rpm:Center: 16,500 fpm, Wing: 16,500 fpm
5 or 6 Wheel Option, with Spring-Cushioned Center Axle
Tire Options: 6" x 21" Laminated Tires
29" x 9 x 15 Used Aircraft Tires
27" x 7.75 x 15 Foam Filled Used Aircraft Tires
Tapered Roller Bearings & Cast Iron 5-Bolt Hubs
with 1 3/4" Shaft
Wing Transport Lock
Wing Hydraulics: 3" x 12" Cylinder, Hoses & Fittings
Height Adjustments: 3 1/2" x 8" Cylinder, Hose, Fittings
& Stroke Control Spacers
Skid Shoes: Wing & Center Section, Both Replaceable
Optional Front and Rear Shielding:
Single or Double Chain
Optional Deck Rings - 1/2" x 3" Fully Welded

SEE NEXT PAGE FOR PRICING.

Gearbox HP rating is based on in field use and performance

See pg. 45 for optional pricing and color options
See pg. 72 for available hitches

WARNING!

Rotary Cutters used in non-agricultural areas must be equipped with front & rear guards. The possibility of thrown objects can be hazardous to persons or property.

Rotary Cutters-Offset

RC3614 - 14' Medium Duty Offset

70-250 HP

MODEL NUMBER	DESCRIPTION	APPROX. MACHINE WEIGHT	LIST PRICE
RC3614	**14' ROTARY CUTTER - OFFSET - 540 rpm**	5990#	$ 12,834
RCM3614	**14' ROTARY CUTTER - OFFSET - 1000 rpm**	5990#	$ 12,834
ADD			
OPTION NUMBER	**Choose One Front Guard**		
-01	Single Row Chain Guard (330-892A)	141#	$ 371
-03	Double Row Chain Guard (330-893A)	155#	$ 517
	Choose One Wheel & Axle Assembly		
-12	5 ea. Laminated Tail Wheels with Dual Axle, Single Wing	550#	$ 2,785
-14	5 ea. Used Airplane Tires with Dual Axle, Single Wing	677#	$ 3,014
-20	6 ea. Laminated Tail Wheels with Dual Axle	668#	$ 2,986
-22	6 ea. Used Airplane Tires with Dual Axle	744#	$ 3,260
-23	5 ea. Foam Filled Airplane Tires	744#	$ 3,357
-24	6 ea. Foam Filled Airplane Tires	832#	$ 3,675
	Choose One Driveline Package		
-31	Conventional U-Joint Main - 540 rpm or 1000 rpm- Cat. 4 Wing	42#	$ 1,154
-32	Constant Velocity U-Joint Main - 540 rpm or 1000 rpm - Cat. 4 Wing	75#	$ 1,476
-33	Conventional U-Joint Main - 540 rpm or 1000 rpm - Cat. 5 Wing	42#	$ 1,154
-34	Constant Velocity U-Joint Main - 540 rpm or 1000 rpm - Cat. 5 Wing	75#	$ 1,476
	Choose One Rear Guard		
-41	Single Row Chain Guard (330-902A)	79#	$ 259
-43	Double Row Chain Guard (330-903A)	100#	$ 328
	You Must Choose Deck Rings or No Deck Rings		
-60	No Deck Rings	0#	$ 0
-61	Deck Rings	131#	$ 594
	You Must Choose A Hitch Clevis Option		
-70	Standard Clevis	77#	$ 0
-71	Swivel Hitch	53#	$ 118
-72	Bar Tite Hitch	68#	$ 263
-73	Pintle Hitch	20#	$ 118
-74	Ball Hitch	20#	$ 118
	You May Choose A Color Option		
-81	Green		
-82	Orange		
-83	Red		
-86	CAT Yellow		
ACCESSORIES AVAILABLE THROUGH THE PARTS DEPT.			
312-315A	**3 SPOOL CONTROL VALVE KIT** For use with single duplex outlet	40#	$ 909
312-316A	**SELECTOR CONTROL VALVE KIT** For use with two duplex outlets	35#	$ 262

Gearbox HP rating is based on in field use and performance

WARNING!

Rotary Cutters used in non-agricultural areas must be equipped with front & rear guards. The possibility of thrown objects can be hazardous to persons or property.

RETURN TO INDEX

Rotary Cutters - 15'

7 YEAR Limited Gearbox Warranty

RC4015 - 15' Medium Duty Smooth Top

50-200 HP

RANCHER

Working Width: 15'
Transport Width: 8' Minimum
Overall Width: 15'9"
Overall Length: 15'6"
Hitch: Pull-Type, Self-Leveling Hitch & Clevis
Tongue Jack
Cutting Height: 2" - 14"
Cutting Capacity: $3^1/_2$"
Deck Height: 12"
Deck Thickness: 10 Gauge
Side Skirt Thickness: $^1/_4$"
Gearbox: 540 rpm: 250 HP Divider; 210 HP Center & Wings
1000 rpm: 250 HP Divider; 210 HP Center & Wings

Gearbox Input Shaft: $1^3/_4$" 20 Spline
Gearbox Output Shaft: $2^3/_8$"
Input Driveline: Constant Velocity U-Joint Cat. 6, Splined or Conventional Cat. 5, Star Profile; 540 or 1000 RPM
Connecting Driveline: Cat. 4 Slip-Clutch
Stump-Jumper: $^3/_{16}$", Round, Dish Shaped
Blades: 2 per Section, $^1/_2$" x 4" Heat Treated Free Swinging Alloy Steel with Uplift
Blade Bolt: Keyed with Hardened Flatwasher & Lock Nut
Blade Overlap: 6"
Blade Speed:
540 rpm: Center & Wings: 16,300 fpm
1000 rpm: Center: 16,300; Wings: 16,000 fpm
4, 6 or 8 Wheels, with Spring-Cushioned Center Axle
Wheel Options:
6" x 21" Laminated Tires
29" x 7.75" x 15" Used Aircraft Tires w/wo foam
Tapered Roller Bearings & Cast Iron 5-Bolt Hubs with $1^3/_4$" Shaft
Wing Transport Locks
Wing Hydraulics: $2^1/_2$" x 12" Cylinder, Hoses & Fittings
Height Adjustments: 3" x 8" Cylinder, Hose, Fittings & Stroke Control Spacers
Skid Shoes: Wings & Center, Replaceable
Optional Front and Rear Shielding: Single or Double Chain, or Rubber
Blade Rotation: L-CW, C-CCW, R-CCW

MODEL NUMBER	DESCRIPTION	APPROX. MACHINE WEIGHT	SHIPPING WEIGHT	LIST PRICE
RC4015-01123470	**15' ROTARY CUTTER - 540 rpm** Front Chain Guard (01) 6 ea. Laminated Tires, Dual Axle (12) Constant Velocity Input Driveline, Cat. 6 (34) Standard Clevis Hitch (70)	3930#	3930#	$ 16,836
		4040#	4040#	$ 17,131
RC4015-0112344170	**15' ROTARY CUTTER - 540 rpm** Front Chain Guard (01) 6 ea. Laminated Tires, Dual Axle (12) Constant Velocity Input Driveline, Cat. 6 (34) Rear Chain Guard (41) Standard Clevis Hitch (70)			
RC4015-0114344170	**15' ROTARY CUTTER - 540 rpm** Front Chain Guard (01) 6 ea. Used Airplane Tires (14) Constant Velocity Input Driveline, Cat. 6 (34) Rear Chain Guard (41) Standard Clevis Hitch (70)	4192#	4192#	$ 17,406

Gearbox HP rating is based on in field use and performance

See pg. 47 for optional pricing and color options

WARNING!

Rotary Cutters used in non-agricultural areas must be equipped with front & rear guards. The possibility of thrown objects can be hazardous to persons or property.

Rotary Cutters - 15'

7 YEAR Limited Gearbox Warranty

RC4015 - 15' Medium Duty

50-200 HP

TO BUILD A UNIT NOT LISTED IN THE CONFIGURED UNIT PRICING, USE THE FOLLOWING.

MODEL NUMBER	DESCRIPTION	APPROX. MACHINE WEIGHT	LIST PRICE
RC4015	**15' ROTARY CUTTER - 540 rpm**	3730#	$ 12,909
RCM4015	**15' ROTARY CUTTER - 1000 rpm**	3730#	$ 12,974
ADD OPTION NUMBER	**Choose One Front Guard**		
-01	Single Row Chain Guard (330-481A)	200#	$ 314
-02	Rubber Guard (330-482A)	130#	$ 260
-03	Double Row Chain Guard (330-483A)	260#	$ 582
	You MUST Choose One Tire Option		
-12	6 ea. Laminated Tailwheels	504#	$ 2,559
-14	6 ea. Used Airplane Tires	656#	$ 2,834
-15	4 ea. Foam Filled Used Airplane Tires	547#	$ 2,672
-16	4 ea. Laminated Tailwheels	342#	$ 2,149
-18	4 ea. Used Airplane Tires	494#	$ 2,330
-20	8 ea. Laminated Tailwheels	666#	$ 3,011
-22	8 ea. Used Airplane Tires	818#	$ 3,375
-23	6 ea. Used Foam Filled Airplane Tires	736#	$ 3,246
-24	8 ea. Used Foam Filled Airplane Tires	925#	$ 4,327
	If 540 RPM - Choose One Driveline Package - Main Driveline - 1-3/8" - 6 Spline		
-31	Main: Conventional U-Joint Wing: Cat. 4 Slip-Clutch	42#	$ 780
-32	Main: CV U-Joint, Cat. 6 Wing: Cat. 5 Slip-Clutch	75#	$ 1,619
-34	Main: CV U-Joint, Cat. 6 Wing: Cat. 4 Slip-Clutch	75#	$ 1,054
	If 1000 RPM - Choose One Driveline Package - Main Driveline - 1-3/8" - 21 Spline		
-31	Main: Conventional U-Joint Wing: Cat. 4 Slip-Clutch	42#	$ 780
-32	Main: CV U-Joint, Cat. 6 Wing: Cat. 5 Slip-Clutch	75#	$ 1,619
-34	Main: CV U-Joint, Cat. 6 Wing: Cat. 4 Slip-Clutch	75#	$ 1,054
	Choose One Rear Guard		
-41	Single Row Chain Guard (330-493A)	110#	$ 295
-42	Rubber Guard (330-494A)	55#	$ 255
-43	Double Row Chain Guard (330-495A)	170#	$ 398
	You May Choose a Winch Option		
-51	Used to fold wings in a hydraulic failure (330-295A)	40#	$ 529
	You Must Choose a Deck Ring Option		
-60	No Deck Rings	0#	$ 0
-61	Deck Rings	200#	$ 514
	You Must Choose a Hitch Clevis Option		
-70	Standard Clevis - Up and Down Swivel	77#	$ 0
-71	Double Swivel Clevis - Up, Down and Side to Side	52#	$ 118
-72	Bar-tite Clevis - Bolts & Clamps to Drawbar - Up & Down & Side to Side Swivel	68#	$ 263
-73	Pintle Hitch	20#	$ 442
-74	Ball Hitch	20#	$ 447
	You May Choose a Color Option		
-81	Green		
-82	Orange		
-83	Red		
318-316A	Hydraulic Wing Control Kit to hydraulically control each wing independently	8#	$ 85

WARNING!

Rotary Cutters used in non-agricultural areas must be equipped with front & rear guards. The possibility of thrown objects can be hazardous to persons or property.

Gearbox HP rating is based on in field use and performance

Rotary Cutters-Offset

RC5510 - 10' Heavy Duty Smooth Top

50-250 HP

Commander

Offset: Right Wing Model
Working Width: 10’6"
Transport Width: 7'6$^{1}/_{2}$’ Minimum
Overall Width: 11'7"
Overall Length: 16’5”
Hitch: Pull-Type, Self-Leveling Hitch & Clevis
Clevis: Standard, Up & Down Swivel
Tongue Jack
Cutting Height: 2” - 14”
Cutting Capacity: 4”
Deck Height: 12”
Deck Thickness: 7 Gauge Bottom, 10 Gauge Top
Side Skirt Thickness: $^{1}/_{4}$”, Replaceable
Gearbox: 540 rpm: Splitter 250 HP; Center & Wing 210 HP
1000 rpm: Splitter 250 HP; Center & Wing 210 HP
Gearbox Input Shaft: 1$^{3}/_{4}$” 20 Spline
Gearbox Output Shaft: 2$^{3}/_{8}$”
*Weightbox on Left Side
Wing Hydraulics: 3" x 12" Cylinder, Hoses & Fittings
Height Adjustment: 3$^{1}/_{2}$" x 8" Cylinder, Hoses,
Fittings & Stroke Control Spacers
Input Driveline: Constant Velocity U-Joint Cat. 6, Splined
or Conventional Cat. 5, Star Profile;
540 or 1000 RPM
Connecting Driveline Option: Cat. 4 or Cat. 5 Slip-Clutch
Stump-Jumper: $^{3}/_{16}$”, Round, Dish Shaped
Blades: 2 per Section, $^{1}/_{2}$” x 4” Heat Treated
Free Swinging Alloy Steel with Uplift
Blade Bolt: Keyed with Hardened Flatwasher & Lock Nut
Blade Overlap: 6”
Blade Speed:
540 rpm: Main: 14,886 fpm, Wing: 14,769 fpm
1000 rpm: Main: 15,604 fpm, Wing: 15,741 fpm
5 or 6 Wheels with Spring-Cushioned Transport Axle with
Optional Walking Tandem
Tire Options: 6” x 21” Laminated Tires,
29" x 7.7" x 15" Used Aircraft Tires w/ or w/o Foam
Tapered Roller Bearings & Cast Iron 5-Bolt Hubs w/1$^{3}/_{4}$” Shaft
Wing Transport Locks
Skid Shoes: Wings - Reversible;
Center - Optional Mounting Location
Optional Front and Rear Shielding: Single or Double Chain,
or Rubber Guard
Optional Deck Rings - $^{1}/_{2}$" x 3" Fully Welded

SEE NEXT PAGE FOR PRICING.

Gearbox HP rating is based on in field use and performance

See pg. 73 for additional accessories
See pg. 72 for available hitches

WARNING!

Rotary Cutters used in non-agricultural areas must be equipped with front & rear guards. The possibility of thrown objects can be hazardous to persons or property.

Rotary Cutters-Offset

RC5510 - 10' Heavy Duty Smooth Top

50-250 HP

Commander

MODEL NUMBER	BASE UNIT			APPROX. MACHINE WEIGHT	LIST PRICE
RC5510	10' ROTARY CUTTER - OFFSET - 540 rpm			4014#	$ 12,859
RCM5510	10' ROTARY CUTTER - OFFSET - 1000 rpm			4014#	$ 12,927
ADD OPTION NO.	**Choose One Front Guard**				
-01	Single Row Chain Guard	(330-041A)		183#	$ 335
-02	Rubber Guard	(330-042A)		125#	$ 248
-03	Double Row Chain Guard	(330-043A)		201#	$ 475
-04	Double Row Chain Guard w/Cable	(330-150A)		204#	$ 516
	Choose One Wheel & Axle Assembly				
-12	5 ea. Laminated Tail Wheels with Dual Axle			408#	$ 2,072
-14	5 ea. Used Airplane Tires with Dual Axle			525#	$ 2,300
-23	5 ea. Used Foam Filled Airplane Tires with Dual Axle			525#	$ 2,646
-26	5 ea. Used Airplane Tires w/Walking Tandem Center Axle			701#	$ 2,875
-27	5 ea. Laminated Tires w/Walking Tandem Center Axle			584#	$ 2,646
-20	6 ea. Laminated Tail Wheels with Dual Axle			478#	$ 2,330
-22	6 ea. Used Airplane Tires with Dual Axle			565#	$ 2,606
IF 540 RPM – Choose One Driveline Package - Main Driveline – 1 3/8" – 6 Spline					
-31	Main: Conventional U-Joint		Wing: Cat. 4 Slip-clutch	42#	$ 580
-32	Main: Constant Velocity U-Joint, Cat. 6		Wing: Cat. 4 Slip-clutch	75#	$ 869
-33	Main: Conventional U-Joint,		Wing: Cat. 5 Slip-clutch	42#	$ 853
-34	Main: Constant Velocity U-Joint, Cat. 6		Wing: Cat. 5 Slip-clutch	75#	$ 1,405
IF 1000RPM – Choose One Driveline Package - Main Driveline					
-31	Main: Conventional U-Joint, 1 3/8"- 21 Spline		Wing: Cat. 4 Slip-clutch	42#	$ 580
-32	Main: CV U-Joint, Cat. 6, 1 3/8" – 21 Spline		Wing: Cat. 4 Slip-cluch	75#	$ 869
-33	Main: Conventional U-Joint, 1 3/8"- 21 Spline		Wing: Cat. 5 Slip-clutch	42#	$ 853
-34	Main: CV U-Joint, Cat. 6, 1 3/8" – 21 Spline		Wing: Cat. 5 Slip-clutch	75#	$ 1,405
-35	Main: CV U-Joint, Cat. 6, 1 3/4" – 20 Spline		Wing: Cat. 4 Slip-clutch	75#	$ 1,015
-36	Main: CV U-Joint, Cat. 6, 1 3/4" – 20 Spline		Wing: Cat. 5 Slip-clutch	75#	$ 1,527
	Choose One Rear Guard				
-41	Single Row Chain Guard	(330-046A)		83#	$ 204
-42	Rubber Deflector	(330-047A)		46#	$ 129
-43	Double Row Chain Guard	(330-048A)		89#	$ 227
-44	Double Row Chain Guard w/Cable	(330-157A)		92#	$ 268
	You May Choose a Winch Option				
-51	Used to fold wings in a hydraulic failure	(330-295A)		40#	$ 529
	You Must Choose a Deck Ring Option				
-60	No Deck Rings			0#	$ 0
-61	Deck Rings			131#	$ 442
	You Must Pick a Hitch Clevis Option				
-70	Standard Clevis - Up & Down Swivel				$ 0
-71	Double Swivel Clevis - Up, Down & Side to Side Swivel			20#	$ 118
-72	Bar-Tite Clevis - Bolts & Clamps to Drawbar, Up, Down & Side to Side Swivel			20#	$ 263
	You May Choose A Color Option				
-81	Green				
-82	Orange				
-83	Red				

Gearbox HP rating is based on in field use and performance

WARNING!

Rotary Cutters used in non-agricultural areas must be equipped with front & rear guards. The possibility of thrown objects can be hazardous to persons or property.

Rotary Cutters - 15'

RC5515 - 15' Heavy Duty Smooth Top

50-250 HP

COMMANDER

Working Width: 15'
Transport Width: 8'6" Minimum
Transport Height: 90"
Overall Width: 15'8"
Overall Length: 16'5"
Hitch: Pull-Type, Self-Leveling Hitch & Clevis
Clevis: Standard, Up and Down Swivel
Tongue Jack
Cutting Height: 2" - 14"
Cutting Capacity: 4"
Deck Height: 12"
Deck Thickness: 7 Gauge Bottom, 10 Gauge Top
Side Skirt Thickness: 1/4", Replaceable
Gearbox: 540 rpm: Splitter 250 HP; Center & Wings 210 HP
1000 rpm: Splitter 250 HP; Center & Wings 210 HP
Gearbox Input Shaft: 1 3/4" 20 Spline
Gearbox Output Shaft: 2 3/8"
Input Driveline: Constant Velocity U-Joint Cat. 6, Splined or Conventional Cat. 5, Star Profile; 540 or 1000 RPM
Connecting Driveline: Choice of Cat. 4 or Cat. 5 Slip-Clutch
Stump-Jumper: 3/16", Round, Dish Shaped
Blades: 2 per Section, 1/2" x 4" Heat Treated Free Swinging Alloy Steel with Uplift
Blade Bolt: Keyed with Hardened Flatwasher & Lock Nut
Blade Overlap: 6"
Blade Speed:
540 rpm: Center: 14,886 fpm, Wings: 14,769 fpm
1000 rpm: Center: 15,604 fpm, Wings: 15,741 fpm
6 or 8 Wheel Option, Spring-Cushioned Center Axle with Optional Walking Tandem
Tire Options:
6" x 21" Laminated Tires;
29" x 9.0" x 15" Used Aircraft Tires;
24" Recapped Aircraft Tires
Tapered Roller Bearings & Cast Iron 5-Bolt Hubs with 1 3/4" Shaft
Wing Transport Locks
Wing Hydraulics: 3" x 12" Cylinder, Hoses & Fittings
Height Adjustments: 3 1/2" x 8" Cylinder, Hose, Fittings & Stroke Control Spacers
Skid Shoes:
Wings - Reversible, Center - Optional Mounting Location
Optional Front and Rear Shielding:
Single or Double Chain, or Rubber Guard
Optional Deck Rings - 1/2" x 3" Fully Welded

MODEL NUMBER	DESCRIPTION	APPROX. MACHINE WEIGHT	SHIPPING WEIGHT	LIST PRICE
RC5515-0112326070	**15' ROTARY CUTTER - 540 rpm** Single Front Chain Guard (01) 6 ea. Laminated Tires, Dual Axle (12) Constant Velocity Input Driveline, Cat. 6 (32) No Deck Rings (60) Standard Clevis (70)	5196#	5196#	$ 19,627
RC5515-12326070	**15' ROTARY CUTTER - 540 rpm** 6 ea. Laminated Tires, Dual Axle (12) Constant Velocity Input Driveline, Cat. 6 (32) No Deck Rings (60) Standard Clevis (70)	4970#	4970#	$ 19,175
RC5515-011232416070	**15' ROTARY CUTTER - 540 rpm** Single Front Chain Guard (01) 6 ea. Laminated Tires, Dual Axle (12) Constant Velocity Input Driveline, Cat. 6 (32) Single Rear Chain Guard (41) No Deck Rings (60) Standard Clevis (70)	5300#	5300#	$ 19,909
RC5515-011432416070	**15' ROTARY CUTTER - 540 rpm** Single Front Chain Guard (01) 6 ea. Used Airplane Tires, Dual Axle (14) Constant Velocity Input Driveline, Cat. 6 (32) Single Rear Chain Guard (41) No Deck Rings (60) Standard Clevis (70)	5452#	5452#	$ 20,181
For 1000 RPM on above units, change prefix to RCM and ADD				$ 86

Gearbox HP rating is based on in field use and performance

See pg. 51 for optional pricing and color options
See pg. 73 for Additional Accessories
See pg. 72 for available hitches

WARNING!

Rotary Cutters used in non-agricultural areas must be equipped with front & rear guards. The possibility of thrown objects can be hazardous to persons or property.

Rotary Cutters - 15'

RC5515 - 15' Heavy Duty Smooth Top

50-250 HP

TO BUILD A UNIT NOT LISTED IN THE CONFIGURED UNIT PRICING, USE THE FOLLOWING.

MODEL NUMBER	DESCRIPTION	APPROX. MACHINE WEIGHT	LIST PRICE
RC5515	15' ROTARY CUTTER - 540 rpm	4391#	$ 15,580
RCM5515	15' ROTARY CUTTER - 1000 rpm	4391#	$ 15,666
ADD OPTION NO	Choose One Front Guard		
-01	Single Row Chain Guard (318-616A)	226#	$ 452
-02	Rubber Guard (318-727A)	155#	$ 392
-03	Double Row Chain Guard (318-705A)	248#	$ 580
-04	Double Row Chain Guard w/Cable	253#	$ 644
	Choose One Wheel & Axle Assembly		
-12	6 ea. Laminated Tail Wheels with Dual Axle	504#	$ 2,547
-14	6 ea. Used Airplane Tires with Dual Axle	656#	$ 2,819
-15	6 ea. Recapped Airplane Tires with Dual Axle	656#	$ 3,300
-16	6 ea. Recapped Foam Filled Airplane Tires with Dual Axle	736#	$ 3,709
-20	8 ea. Laminated Tail Wheels with Dual Axle	644#	$ 2,995
-22	8 ea. Used Airplane Tires with Dual Axle	736#	$ 3,358
-23	6 ea. Used Foam Filled Airplane Tires with Dual Axle	736#	$ 3,230
-25	6 ea. Used Foam Filled Airplane Tires w/Walking Tandem Center Axle	916#	$ 3,797
-26	6 ea. Used Airplane Tires w/Walking Tandem Center Axle	836#	$ 3,388
	If 540 RPM - Choose One Driveline Package - Main Driveline - 1 3/8" - 6 Spline		
-31	Main: Conventional U-Joint Wing: Cat. 4 Slip-Clutch	42#	$ 776
-32	Main: Constant Velocity U-Joint, Cat. 6 Wing: Cat. 4 Slip-Clutch	75#	$ 1,048
-33	Main: Conventional U-Joint Wing: Cat. 5 Slip-Clutch	42#	$ 1,154
-34	Main: Constant Velocity U-Joint, Cat. 6 Wing: Cat. 5 Slip-Clutch	75#	$ 1,619
	If 1000 RPM - Choose One Driveline Package - Main Driveline		
-31	Main: Conventional U-Joint, $1^3/_8$" - 21 Spline Wing: Cat. 4 Slip-Clutch	42#	$ 776
-32	Main: CV U-Joint, Cat. 6, $1^3/_8$" - 21 Spline Wing: Cat. 4 Slip-Clutch	75#	$ 1,048
-33	Main: Conventional U-Joint, $1^3/_8$"-21 Spline Wing: Cat. 5 Slip-Clutch	42#	$ 1,154
-34	Main: CV U-Joint, Cat. 6, $1^3/_8$" -21 Spline Wing: Cat. 5 Slip-Clutch	75#	$ 1,619
-35	Main: CV U-Joint, Cat. 6, $1^3/_4$" -20 Spline Wing: Cat. 4 Slip-Clutch	75#	$ 1,193
-36	Main: CV U-Joint, Cat. 6, $1^3/_4$" -20 Spline Wing: Cat. 5 Slip-Clutch	75#	$ 1,764
	Choose One Rear Guard		
-41	Single Row Chain Guard (318-717A)	104#	$ 282
-42	Rubber Deflector (318-726A)	58#	$ 187
-43	Double Row Chain Guard (318-708A)	112#	$ 396
-44	Double Row Chain Guard w/Cable	117#	$ 459
	You May Choose a Winch Option		
-51	Used to fold wings in a hydraulic failure (330-295A)	40#	$ 529
	You Must Choose Deck Ring Option		
-60	No Deck Rings	0#	$ 0
-61	Deck Rings	200#	$ 594
	You Must Pick a Hitch Clevis Option		
-70	Standard Clevis - Up & Down Swivel	77#	$ 0
-71	Double Swivel Clevis - Up, Down & Side to Side Swivel	52#	$ 118
-72	Bar-Tite Clevis - Bolts & Clamps to Drawbar, Up, Down & Side to Side Swivel	68#	$ 263
	You May Choose a Color Option		
-81	Green		
-82	Orange		
-83	Red		
	You May Choose a Shredder Option		
-90	Shredder Kit*		$ 0

*This kit will be factory installed when ordered with the cuttter and this option number. It replaces the blade and stumpjumper configuration, which is priced in the base price. For separate pricing, see page 73.

Gearbox HP rating is based on in field use and performance

Rotary Cutters-Offset

RC5610 - 10' Heavy Duty Smooth Top

50-250 HP

Commander

Offset: Right Wing Model
Working Width: 10'6"
Transport Width: 7'6$^{1}/_{2}$" Minimum
Overall Width: 11'7"
Overall Length: 16'5"
Hitch: Pull-Type, Self-Leveling Hitch & Clevis
Clevis: Standard, Up & Down Swivel
Tongue Weight: 1,860 lbs
Tongue Jack
Cutting Height: 2" - 14"
Cutting Capacity: 4"
Deck Height: 12"
Deck Thickness: 7 Gauge Bottom, 10 Gauge Top
Side Skirt Thickness: $^{1}/_{4}$", Replaceable

Gearbox: 540 rpm: Splitter 250 HP; Center & Wing 210 HP
1000 rpm: Splitter 250 HP; Center & Wing 210 HP
Gearbox Input Shaft: 1$^{3}/_{4}$" 20 Spline
Gearbox Output Shaft: 2$^{3}/_{8}$"
*Weightbox on Left Side
Wing Hydraulics: 3" x 8" Cylinder, Hoses & Fittings
Height Adjustment: 3$^{1}/_{2}$" x 8" Cylinder, Hoses, Fittings & Stroke Control Spacers
Input Driveline: Constant Velocity U-Joint Cat. 6, Splined or Conventional Cat. 5, Star Profile; 540 or 1000 RPM
Connecting Driveline Option: Cat. 4 or Cat. 5 Slip-Clutch
Stump-Jumper: $^{3}/_{16}$", Round, Dish Shaped
Blades: 2 per Section, $^{1}/_{2}$" x 4" Heat Treated
Free Swinging Alloy Steel with Uplift
Blade Bolt: Keyed with Hardened Flatwasher & Lock Nut
Blade Overlap: 6"
Blade Speed:
540 rpm: Center & Wings: 16,300 fpm
1000 rpm: Center: 16,300; Wings: 16,000 fpm
5 or 6 Wheels w/Individual Spring-Cushioned Wheel Arms
Tire Options:
6" x 21" Laminated Tires,
29" x 7.7" x 15" Used Aircraft Tires w/ or w/o Foam
Recapped Airplane Tires
Tapered Roller Bearings & Cast Iron 5-Bolt Hubs w/ 1$^{3}/_{4}$" Shaft
Wing Transport Locks
Skid Shoes: Wings - Reversible; Center
Optional Front and Rear Shielding:
Single or Double Chain, w/ or w/o Cable, or Rubber Guard
Optional Deck Rings - $^{1}/_{2}$" x 3" Fully Welded

SEE NEXT PAGE FOR PRICING.

Gearbox HP rating is based on in field use and performance

See pg. 53 for additional accessories
See pg. 72 for available hitches

WARNING!

Rotary Cutters used in non-agricultural areas must be equipped with front & rear guards. The possibility of thrown objects can be hazardous to persons or property.

Rotary Cutters-Offset

RC5610 - 10' Heavy Duty Smooth Top

50-250 HP

MODEL NUMBER	BASE UNIT			APPROX. MACHINE WEIGHT	LIST PRICE
RC5610	10' ROTARY CUTTER - OFFSET - 540 rpm			4334#	$ 13,697
RCM5610	10' ROTARY CUTTER - OFFSET - 1000 rpm			4334#	$ 13,765
ADD OPTION NO.	**Choose One Front Guard**				
-01	Single Row Chain Guard	(330-512A)		183#	$ 335
-02	Rubber Guard	(330-513A)		125#	$ 248
-03	Double Row Chain Guard	(330-514A)		201#	$ 475
-04	Double Row Chain Guard w/Cable	(330-515A)		204#	$ 516
	Choose One Wheel & Axle Assembly				
-12	5 ea. Laminated Tail Wheels with Dual Axle			408#	$ 2,072
-14	5 ea. Used Airplane Tires with Dual Axle			525#	$ 2,300
-15	5 ea. Recapped Aircraft with Dual Axle			525#	$ 2,751
-16	5 ea. Recapped Foam Filled Aircraft with Dual Axle			740#	$ 3,091
-23	5 ea. Used Foam Filled Airplane Tires with Dual Axle			740#	$ 2,646
-20	6 ea. Laminated Tail Wheels with Dual Axle			478#	$ 2,330
-22	6 ea. Used Airplane Tires with Dual Axle			565#	$ 2,606
IF 540 RPM – Choose One Driveline Package - Main Driveline – 1 3/8" – 6 Spline					
-31	Main: Conventional U-Joint		Wing: Cat. 4 Slip-clutch	42#	$ 580
-32	Main: Constant Velocity U-Joint, Cat. 6		Wing: Cat. 4 Slip-clutch	75#	$ 869
-33	Main: Conventional U-Joint,		Wing: Cat. 5 Slip-clutch	42#	$ 853
-34	Main: Constant Velocity U-Joint, Cat. 6		Wing: Cat. 5 Slip-clutch	75#	$ 1,405
IF 1000RPM – Choose One Driveline Package - Main Driveline					
-31	Main: Conventional U-Joint, 1 3/8"- 21 Spline		Wing: Cat. 4 Slip-clutch	42#	$ 580
-32	Main: CV U-Joint, Cat. 6, 1 3/8" – 21 Spline		Wing: Cat. 4 Slip-clutch	75#	$ 869
-33	Main: Conventional U-Joint, 1 3/8"- 21 Spline		Wing: Cat. 5 Slip-clutch	42#	$ 853
-34	Main: CV U-Joint, Cat. 6, 1 3/8" –21 Spline		Wing: Cat. 5 Slip-clutch	75#	$ 1,405
-35	Main: CV U-Joint, Cat. 6, 1 3/4" –20 Spline		Wing: Cat. 4 Slip-clutch	75#	$ 1,015
-36	Main: CV U-Joint, Cat. 6, 1 3/4" –20 Spline		Wing: Cat. 5 Slip-clutch	75#	$ 1,527
	Choose One Rear Guard				
-41	Single Row Chain Guard	(330-524A)		83#	$ 204
-42	Rubber Deflector	(330-525A)		46#	$ 129
-43	Double Row Chain Guard	(330-526A)		89#	$ 227
-44	Double Row Chain Guard w/Cable	(330-527A)		92#	$ 268
	You May Choose a Winch Option				
-51	Used to fold wings in a hydraulic failure	(330-295A)		40#	$ 529
	You Must Choose a Deck Ring Option				
-60	No Deck Rings			0#	$ 0
-61	Deck Rings			131#	$ 442
	You Must Pick a Hitch Clevis Option				
-70	Standard Clevis - Up & Down Swivel			77#	$ 0
-71	Double Swivel Clevis - Up, Down & Side to Side Swivel			52#	$ 118
-72	Bar-Tite Clevis - Bolts & Clamps to Drawbar, Up, Down & Side to Side Swivel			68#	$ 263
	You May Choose A Color Option				
-81	Green				
-82	Orange				
-83	Red				

Gearbox HP rating is based on in field use and performance

WARNING!

Rotary Cutters used in non-agricultural areas must be equipped with front & rear guards. The possibility of thrown objects can be hazardous to persons or property.

Rotary Cutters - 15'

7 YEAR Limited Gearbox Warranty

RC5615 - 15' Heavy Duty Smooth Top

50-250 HP

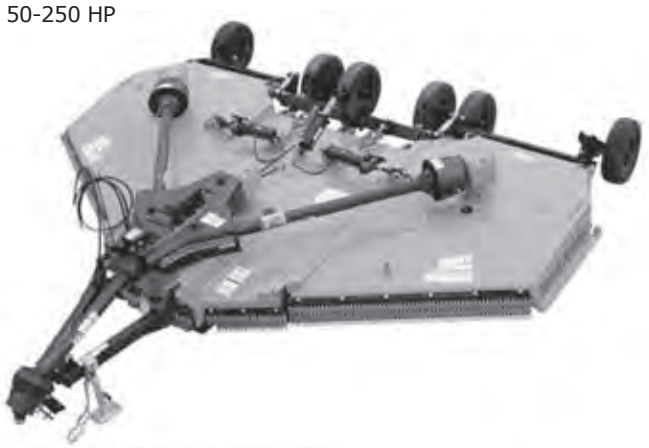

COMMANDER

Working Width: 15'
Transport Width: 9'1" Minimum
Transport Height: 90"
Overall Width: 16'
Overall Length: 15'1"
Hitch: Pull-Type, Self-Leveling Hitch & Clevis
Clevis: Standard, Up and Down Swivel
Tongue Weight: 1,860 lbs.
Tongue Jack
Cutting Height: 2" - 14"
Cutting Capacity: 4"
Deck Height: 12"
Deck Thickness: 7 Gauge Bottom, 10 Gauge Top
Side Skirt Thickness: 1/4", Replaceable

Gearbox: 540 rpm: Splitter 250 HP; Center & Wings 210 HP
1000 rpm: Splitter 250 HP; Center & Wings 210 HP
Gearbox Input Shaft: 1 3/4" 20 Spline
Gearbox Output Shaft: 2 3/8"
Input Driveline: Constant Velocity U-Joint Cat. 6, Splined or Conventional Cat. 5, Star Profile; 540 or 1000 RPM
Connecting Driveline: Choice of Cat. 4 or Cat. 5 Slip-Clutch
Stump-Jumper: 3/16", Round, Dish Shaped
Blades: 2 per Section, 1/2" x 4" Heat Treated Free Swinging Alloy Steel with Uplift
Blade Bolt: Keyed with Hardened Flatwasher & Lock Nut
Blade Overlap: 6"
Blade Speed:
Blade Speed:
540 rpm: Center & Wings: 16,300 fpm
1000 rpm: Center: 16,300; Wings: 16,000 fpm
6 or 8 Wheel Option,Individual Spring-Cushioned Wheel Arms
Tire Options:
6" x 21" Laminated Tires;24" Recapped Aircraft Tires
29" x 7.7" x 15" Used Aircraft Tires with or without Foam
Tapered Roller Bearings & Cast Iron 5-Bolt Hubs with 1 3/4" Shaft
Wing Transport Locks
Wing Hydraulics: 3" x 8" Cylinder, Hoses & Fittings
Height Adjustments: 3 1/2" x 8" Cylinder, Hose, Fittings & Stroke Control Spacers
Skid Shoes:
Wings - Reversible, Center
Optional Front and Rear Shielding:
Single or Double Chain, or Rubber Guard
Optional Deck Rings - 1/2" x 3" Fully Welded

MODEL NUMBER	DESCRIPTION	APPROX. MACHINE WEIGHT	SHIPPING WEIGHT	LIST PRICE
RC5615-0112326070	**15' ROTARY CUTTER - 540 rpm** Single Front Chain Guard (01) 6 ea. Laminated Tires, Dual Axle (12) Constant Velocity Input Driveline, Cat. 6 (32) No Deck Rings (60) Standard Clevis (70)	5,190#	5,190#	$ 20,104
RC5615-12326070	**15' ROTARY CUTTER - 540 rpm** 6 ea. Laminated Tires, Dual Axle (12) Constant Velocity Input Driveline, Cat. 6 (32) No Deck Rings (60) Standard Clevis (70)	4,887#	4,887#	$ 19,652
RC5615-011232416070	**15' ROTARY CUTTER - 540 rpm** Single Front Chain Guard (01) 6 ea. Laminated Tires, Dual Axle (12) Constant Velocity Input Driveline, Cat. 6 (32) Single Rear Chain Guard (41) No Deck Rings (60) Standard Clevis (70)	4,964#	4,964#	$ 20,386
RC5615-011432416070	**15' ROTARY CUTTER - 540 rpm** Single Front Chain Guard (01) 6 ea. Used Airplane Tires, Dual Axle (14) Constant Velocity Input Driveline, Cat. 6 (32) Single Rear Chain Guard (41) No Deck Rings (60) Standard Clevis (70)	5,446#	5,446#	$ 20,658
For 1000 RPM on above units, change prefix to RCM and ADD				$ 85

See pg. 55 for optional pricing and color options
See pg. 72 for available hitches

Gearbox HP rating is based on in field use and performance

WARNING!
Rotary Cutters used in non-agricultural areas must be equipped with front & rear guards. The possibility of thrown objects can be hazardous to persons or property.

Rotary Cutters - 15'

7 YEAR Limited Gearbox Warranty*

RC5615 - 15' Heavy Duty Smooth Top

50-250 HP

TO BUILD A UNIT NOT LISTED IN THE CONFIGURED UNIT PRICING, USE THE FOLLOWING.

MODEL NUMBER	DESCRIPTION		APPROX. MACHINE WEIGHT	LIST PRICE
RC5615	15' ROTARY CUTTER - 540 rpm		4308#	$ 16,057
RCM5615	15' ROTARY CUTTER - 1000 rpm		4308#	$ 16,142
ADD OPTION NUMBER	**Choose One Front Guard**			
-01	Single Row Chain Guard	(330-279A)	226#	$ 452
-02	Rubber Guard	(330-314A)	155#	$ 392
-03	Double Row Chain Guard	(330-280A)	248#	$ 580
-04	Double Row Chain Guard w/Cable	(330-281A)	253#	$ 644
	Choose One Wheel & Axle Assembly			
-12	6 ea. Laminated Tail Wheels with Dual Axle		504#	$ 2,547
-14	6 ea. Used Airplane Tires with Dual Axle		656#	$ 2,819
-15	6 ea. Recapped Airplane Tires with Dual Axle		656#	$ 3,300
-16	6 ea. Recapped Foam Filled Airplane Tires with Dual Axle		736#	$ 3,709
-20	8 ea. Laminated Tail Wheels with Dual Axle		644#	$ 2,995
-22	8 ea. Used Airplane Tires with Dual Axle		736#	$ 3,358
-23	6 ea. Used Foam Filled Airplane Tires with Dual Axle		736#	$ 3,230
	If 540 RPM - Choose One Driveline Package - Main Driveline - 1 3/8" - 6 Spline			
-31	Main: Conventional U-Joint	Wing: Cat. 4 Slip-Clutch	42#	$ 776
-32	Main: Constant Velocity U-Joint, Cat. 6	Wing: Cat. 4 Slip-Clutch	75#	$ 1,048
-33	Main: Conventional U-Joint	Wing: Cat. 5 Slip-Clutch	42#	$ 1,154
-34	Main: Constant Velocity U-Joint, Cat. 6	Wing: Cat. 5 Slip-Clutch	75#	$ 1,619
	If 1000 RPM - Choose One Driveline Package - Main Driveline			
-31	Main: Conventional U-Joint, 1 3/8" - 21 Spline	Wing: Cat. 4 Slip-Clutch	42#	$ 776
-32	Main: CV U-Joint, Cat. 6, 1 3/8" - 21 Spline	Wing: Cat. 4 Slip-Clutch	75#	$ 1,048
-33	Main: Conventional U-Joint, 1 3/8"-21 Spline	Wing: Cat. 5 Slip-Clutch	42#	$ 1,154
-34	Main: CV U-Joint, Cat. 6, 1 3/8" -21 Spline	Wing: Cat. 5 Slip-Clutch	75#	$ 1,619
-35	Main: CV U-Joint, Cat. 6, 1 3/4" -20 Spline	Wing: Cat. 4 Slip-Clutch	75#	$ 1,193
-36	Main: CV U-Joint, Cat. 6, 1 3/4" -20 Spline	Wing: Cat. 5 Slip-Clutch	75#	$ 1,764
	Choose One Rear Guard			
-41	Single Row Chain Guard	(330-282A)	104#	$ 282
-42	Rubber Deflector	(330-315A)	58#	$ 187
-43	Double Row Chain Guard	(330-283A)	112#	$ 396
-44	Double Row Chain Guard w/Cable	(330-284A)	117#	$ 459
	You May Choose a Winch Option			
-51	Used to fold wings in a hydraulic failure	(330-295A)	40#	$ 529
	You May Choose Deck Ring Option			
-60	No Deck Rings		0#	$ 0
-61	Deck Rings		200#	$ 594
	You Must Pick a Hitch Clevis Option			
-70	Standard Clevis - Up & Down Swivel		77#	$ 0
-71	Double Swivel Clevis - Up, Down & Side to Side Swivel		52#	$ 118
-72	Bar-Tite Clevis - Bolts & Clamps to Drawbar, Up, Down & Side to Side Swivel		68#	$ 263
	You May Choose a Color Option			
-81	Green			
-82	Orange			
-83	Red			
	You May Choose a Shredder Option			
-90	Shredder Kit*[A]			$ 0
-91	Baffle Kit*			$ 622
-92	Shredder* & Baffle Kit [A]			$ 622

*This kit will be factory installed when ordered with the cutter and this option number.
[A] The Shredder and Fixed Blade replace the stumpjumper and blade configurations, which is figured in the base price.
**The Shredder Kit cannot be used in conjunction with Deck Rings.
Gearbox HP rating is based on in field use and performance

Rotary Cutters-Offset

RC6510 - 10' Extra-Heavy Duty Smooth Top

50-250 HP

DOMINATOR

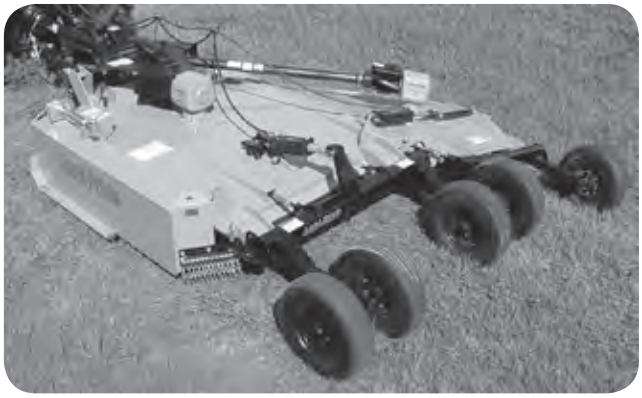

Offset: Right Wing Model
Working Width: 10'6"
Transport Width: 7'6$^1/_2$" Minimum
Overall Width: 11'7"
Overall Length: 16'5"
Hitch: Pull-Type, Self-Leveling Hitch & Clevis
Clevis: Standard, Up and Down Swivel
Tongue Jack
Cutting Height: 2" - 14"
Cutting Capacity: 4$^1/_2$"
Deck Height: 12"
Deck Thickness: 7 Gauge Bottom, 10 Gauge Top

Side Skirt Thickness: $^1/_4$", Replaceable
Gearbox: 540 rpm: Splitter 250 HP; Center & Wing 210 HP
1000 rpm: Splitter 250 HP; Center & Wing 210 HP
Gearbox Input Shaft: 1$^3/_4$" 20 Spline
Gearbox Output Shaft: 2$^3/_8$"
*Weightbox on Left Side
Wing Hydraulics: 3" x 12" Cylinder, Hoses & Fittings
Height Adjustment: 3$^1/_2$" x 8" Cylinder, Hoses, Fittings & Stroke Control Spacers
Input Driveline: Constant Velocity U-Joint Cat. 6, Splined or Conventional Cat. 5, Star Profile; 540 or 1000 RPM
Connecting Driveline: Cat. 5 Slip-Clutch, Star Profile
Stump-Jumper: $^3/_{16}$", Round, Dish Shaped, 1" Steel Plate Support
Blades: 2 per Section, $^1/_2$" x 4" Heat Treated Free Swinging Alloy Steel with Uplift
Blade Bolt: Keyed with Hardened Flatwasher & Lock Nut
Blade Overlap: 6"
Blade Speed: 540 rpm: Main: 14,886 fpm, Wing: 14,769 fpm
1000 rpm: Main: 15,604 fpm, Wing: 15,741 fpm
5 Wheels: 4 center, 1 wing, bolt in spindles
6 Wheels: 4 center, 2 wing, bolt in spindles
Spring-Cushioned Transport Axle w/Optional Walking Tandem
Tire Options: 6" x 21" Laminated Tires
29" x 7.7" x15" Used Aircraft Tires w/ or w/o Foam
Tapered Roller Bearings & Cast Iron 5-Bolt Hubs w/1$^3/_4$" Shaft
Wing Transport Locks
Skid Shoes: Wing and Main, Replaceable
Optional Front & Rear Shielding:
Single or Double Chain, or Rubber Guard
Optional Deck Rings - $^1/_2$" x 3" Fully Welded

SEE NEXT PAGE FOR PRICING.

Gearbox HP rating is based on in field use and performance

See pg. 57 for additional accessories
See pg. 72 for available hitches

WARNING!

Rotary Cutters used in non-agricultural areas must be equipped with front & rear guards. The possibility of thrown objects can be hazardous to persons or property.

Rotary Cutters-Offset

RC6510 - 10' Extra-Heavy Duty Smooth Top

50-250 HP

DOMINATOR

MODEL NUMBER	BASE UNIT		APPROX. MACHINE WEIGHT	LIST PRICE
RC6510	10' ROTARY CUTTER - OFFSET - 540 rpm		4034#	$ 15,490
RCM6510	10' ROTARY CUTTER - OFFSET - 1000 rpm		4034#	$ 15,564
ADD OPTION NO.	**Choose One Front Guard**			
-01	Single Row Chain Guard	(330-041A)	183#	$ 335
-02	Rubber Guard	(330-042A)	125#	$ 248
-03	Double Row Chain Guard	(330-043A)	201#	$ 475
-04	Double Row Chain Guard w/Cable	(330-150A)	204#	$ 516
	Choose One Wheel & Axle Assembly			
-12	5 ea. Laminated Tail Wheels		408#	$ 2,072
-14	5 ea. Used Airplane Tires		525#	$ 2,300
-25	5 ea. Used Foam Filled Airplane Tires w/Walking Tandem Center Axle		766#	$ 3,219
-26	5 ea. Used Airplane Tires w/Walking Tandem Center Axle		701#	$ 2,875
-27	5 ea. Laminated Tires w/Walking Tandem Center Axle		584#	$ 2,646
-20	6 ea. Laminated Tail Wheels		478#	$ 2,330
-22	6 ea. Used Airplane Tires		565#	$ 2,606
	Choose One Driveline Package			
-33	Conventional U-Joint - 540 rpm Cat. 5 1 3/8" - 6 Spline		42#	$ 853
-33	Conventional U-Joint - 1000 rpm Cat. 5 1 3/8" - 21 Spline		42#	$ 853
-34	Constant Velocity U-Joint - 540 rpm Cat. 6 1-3/8" - 6 Spline		75#	$ 1,405
-34	Constant Velocity U-Joint - 1000 rpm Cat. 6 1-3/8" - 21 Spline		75#	$ 1,405
-36	Constant Velocity U-Joint - 1000 rpm Cat. 6 1-3/4" - 20 Spline		75#	$ 1,527
	Choose One Rear Guard			
-41	Single Row Chain Guard	(330-046A)	83#	$ 204
-42	Rubber Deflector	(330-047A)	46#	$ 129
-43	Double Row Chain Guard	(330-048A)	89#	$ 227
-44	Double Row Chain Guard w/Cable	(330-157A)	92#	$ 268
	You May Choose a Winch Option			
-51	Used to fold wings in a hydraulic failure	(330-295A)	40#	$ 529
	You Must Choose a Deck Ring Option			
-60	No Deck Rings		0#	$ 0
-61	Deck Rings		131#	$ 442
	You Must Choose a Hitch Clevis Option			
-70	Standard Clevis - Up & Down Swivel		77#	$ 0
-71	Double Swivel Clevis - Up, Down & Side to Side Swivel		52#	$ 118
-72	Bar-Tite Clevis - Bolts & Clamps to Drawbar Up, Down & Side to Side Swivel		68#	$ 263
	You May Choose A Color Option			
-81	Green			
-82	Orange			
-83	Red			

Gearbox HP rating is based on in field use and performance

WARNING!

Rotary Cutters used in non-agricultural areas must be equipped with front & rear guards. The possibility of thrown objects can be hazardous to persons or property.

Rotary Cutters - 15'

RC6515 - 15' Extra-Heavy Duty Smooth Top

50-250 HP

DOMINATOR

Working Width: 15'
Transport Width: 8'6" Minimum
Overall Width: 16'5"
Overall Length: 15'1"
Hitch: Pull-Type, Self-Leveling Hitch & Standard Clevis
Clevis: Standard, Up and Down Swivel
Tongue Jack
Cutting Height: 2" - 14"
Cutting Capacity: $4^1/_2$"
Deck Height: 12"
Deck Thickness: 7 Gauge Bottom, 10 Gauge Top
Side Skirt Thickness: $^1/_4$", Replaceable

Gearbox: 540 rpm: Splitter 250 HP; Center & Wings 210 HP
1000 rpm: Splitter 250 HP; Center & Wings 210 HP
Gearbox Input Shaft: $1^3/_4$" - 20 Spline
Gearbox Output Shaft: $2^3/_8$"
Input Driveline: Constant Velocity U-Joint Cat. 6, Splined or Conventional Cat. 5, Star Profile; 540 or 1000 RPM
Connecting Driveline: Cat. 5 Slip-Clutch, Star Profile
Stump-Jumper: $^3/_{16}$", Round, Dish Shaped, 1" Steel Plate Support
Blades: 2 per Section, $^1/_2$" x 4" Heat Treated Free Swinging Alloy Steel with Uplift
Blade Bolt: Keyed with Hardened Flatwasher & Lock Nut
Blade Overlap: 6"
Blade Speed:
540 rpm; Center: 14,886 fpm, Wings: 14,769 fpm
1000 rpm: Center: 15,604 fpm,Wings: 15,741 fpm
Spring-Cushioned Center Axle w/Optional Walking Tandem
6 or 8 Wheel Option
Tire Options:
6" x 21" Laminated Tires
29" x 7.7" x 15" Used Aircraft Tires or 15" Rims
Tapered Roller Bearings & Cast Iron 5-Bolt Hubs w/$1^3/_4$" Shaft
Wing Transport Lock
Wing Hydraulics: 3" x 12" Cylinder, Hoses & Fittings
Height Adjustments: $3^1/_2$" x 8" Cylinder, Hoses, Fittings & Stroke Control Spacers
Skid Shoes: Wings Reversible & Center, Both Replaceable
Optional Front and Rear Shielding: Single or Double Chain, or Rubber Guard
Optional Deck Rings - $^1/_2$" x 3" Fully Welded
Optional Green or Red Paint

MODEL NUMBER	DESCRIPTION	APPROX. MACHINE WEIGHT	SHIPPING WEIGHT	LIST PRICE
RC6515-011234416070	**15' ROTARY CUTTER - 540 rpm** Single Front Chain Guard (01) 6 ea. Laminated Tires, Dual Axle (12) Constant Velocity Input Driveline, Cat. 6 (34) Single Rear Chain Guard (41) No Deck Rings (60) Standard Clevis (70)	5330#	5330#	$ 22,923
RC6515-011434416070	**15' ROTARY CUTTER - 540 rpm** Single Front Chain Guard (01) 6 ea. Used Airplane Tires, Dual Axle (14) Constant Velocity Input Driveline, Cat. 6 (34) Single Rear Chain Guard (41) No Deck Rings (60) Standard Clevis (70)	5482#	5482#	$ 23,195
RC6515-011434416170	**15' ROTARY CUTTER - 540 rpm** Single Front Chain Guard (01) 6 ea. Used Airplane Tires, Dual Axle (14) Constant Velocity Input Driveline, Cat. 6 (34) Single Rear Chain Guard (41) Deck Rings (61) Standard Clevis (70)	5682#	5682#	$ 23,789

For 1000 RPM on above units, change prefix to RCM and ADD 88

Gearbox HP rating is based on in field use and performance

See pg. 59 for optional pricing and color choices
See pg. 73 for additional accessories
See pg. 72 for Available Hitches

WARNING!
Rotary Cutters used in non-agricultural areas must be equipped with front & rear guards. The possibility of thrown objects can be hazardous to persons or property.

Rotary Cutters - 15'

7 YEAR Limited Gearbox Warranty

RC6515 - 15' Extra-Heavy Duty Smooth Top

50-250 HP

MODEL NUMBER	DESCRIPTION		APPROX. MACHINE WEIGHT	LIST PRICE
RC6515	15' ROTARY CUTTER - 540 rpm		4421#	$ 18,023
RCM6515	15' ROTARY CUTTER - 1000 rpm		4421#	$ 18,111
ADD OPTION NUMBER	**Choose One Front Guard**			
-01	Single Row Chain Guard	(318-616A)	226#	$ 452
-02	Rubber Guard	(318-727A)	155#	$ 392
-03	Double Row Chain Guard	(318-705A)	248#	$ 580
-04	Double Row Chain Guard w/Cable	(330-149A)	253#	$ 644
	Choose One Wheel & Axle Assembly			
-12	6 ea. Laminated Tail Wheels with Dual Axle		504#	$ 2,547
-14	6 ea. Used Airplane Tires with Dual Axle		656#	$ 2,819
-15	6 ea. Recapped Airplane Tires with Dual Axle		656#	$ 3,300
-22	8 ea. Used Airplane Tires with Dual Axle		736#	$ 3,358
-23	6 ea. Used Foam Filled Airplane Tires with Dual Axle		736#	$ 3,230
-25	6 ea. Used Foam Filled Airplane Tires w/Walking Tandem Center Axle		916#	$ 3,797
-26	6 ea. Used Airplane Tires w/Walking Tandem Center Axle		836#	$ 3,388
	If 540 RPM - Choose One Driveline Package - Main Driveline - 1 3/8" - 6 Spline			
-33	Main: Conventional U-Joint	Wing: Cat. 5 Slip-Clutch	42#	$ 1,154
-34	Main: Constant Velocity U-Joint, Cat. 6	Wing: Cat. 5 Slip-Clutch	75#	$ 1,619
	If 1000 RPM - Choose One Driveline Package - Main Driveline			
-33	Main: Conventional U-Joint, $1^3/_8$"-21 Spline	Wing: Cat. 5 Slip-Clutch	42#	$ 1,154
-34	Main: CV U-Joint, Cat. 6, $1^3/_8$"-21 Spline	Wing: Cat. 5 Slip-Clutch	75#	$ 1,619
-36	Main: CV U-Joint, Cat. 6, $1^3/_4$"-20 Spline	Wing: Cat. 5 Slip-Clutch	75#	$ 1,764
	Choose One Rear Guard			
-41	Single Row Chain Guard	(318-717A)	104#	$ 282
-42	Rubber Deflector	(318-726A)	58#	$ 187
-43	Double Row Chain Guard	(318-708A)	112#	$ 396
-44	Double Row Chain Guard w/Cable	(330-156A)	117#	$ 459
	You May Choose a Winch Option			
-51	Used to fold wings in a hydraulic failure	(330-295A)	40#	$ 529
	You Must Choose a Deck Ring Option			
-60	No Deck Rings		0#	$ 0
-61	Deck Rings		200#	$ 594
	You Must Choose a Hitch Clevis Option			
-70	Standard Clevis - Up & Down Swivel		77#	$ 0
-71	Double Swivel Clevis - Up, Down & Side to Side Swivel		52#	$ 118
-72	Bar-Tite Clevis - Bolts & Clamps to Drawbar Up & Down & Side to Side Swivel		68#	$ 263
	You May Choose A Color Option			
-81	Green			
-82	Orange			
-83	Red			
	You May Choose a Shredder Option			
-90	Shredder Kit*			$ 0

*This kit will be factory installed when ordered with the cuttter and this option number. It replaces the blade and stumpjumper configuration, which is priced in the base price. For separate pricing, see page 73.

Gearbox HP rating is based on in field use and performance

WARNING!

Rotary Cutters used in non-agricultural areas must be equipped with front & rear guards. The possibility of thrown objects can be hazardous to persons or property.

Rotary Cutters - 15'

RC6615 - 15' Extra-Heavy Duty Smooth Top

50-250 HP

DOMINATOR

Working Width: 15'
Transport Width: 9'1" Minimum
Overall Width: 15'8"
Overall Length: 16'
Hitch: Pull-Type, Self-Leveling Hitch & Standard Clevis
Clevis: Standard, Up and Down Swivel
Hitch Weight: 1,842 lbs
Tongue Jack
Cutting Height: 2" - 14"
Cutting Capacity: $4^1/_2$"
Deck Height: 12"
Deck Thickness: 7 Gauge Bottom, 10 Gauge Top

Side Skirt Thickness: $^1/_4$", Replaceable
Gearbox: 540 rpm: Splitter 250 HP; Center & Wings 210 HP
1000 rpm: Splitter 250 HP; Center & Wings 210 HP
Gearbox Input Shaft: $1^3/_4$" - 20 Spline
Gearbox Output Shaft: $2^3/_8$"
Input Driveline: Constant Velocity U-Joint Cat. 6, Splined
or Conventional Cat. 5, Star Profile;
540 or 1000 RPM
Connecting Driveline: Cat. 5 Slip-Clutch, Star Profile
Stump-Jumper: $^3/_{16}$", Round, Dish Shaped,
1" Steel Plate Support
Blades: 2 per Section, $^1/_2$" x 4" Heat Treated
Free Swinging Alloy Steel with Uplift
Blade Bolt: Keyed with Hardened Flatwasher & Lock Nut
Blade Overlap: 6"
Blade Speed:
540 rpm: Center & Wings: 16,300 fpm
1000 rpm: Center: 16,300; Wings: 16,000 fpm
6 or 8 Wheel Option, Individual Spring-Cushioned Wheel Arms
Tire Options:
6" x 21" Laminated Tires
29" Recapped Airplane Tires
24" x 7.7" x 15" Used Aircraft Tires w/or w/o foam
Tapered Roller Bearings & Cast Iron 5-Bolt Hubs w/$1^3/_4$" Shaft
Wing Transport Lock
Wing Hydraulics: 3" x 8" Cylinder, Hoses & Fittings
Height Adjustments: $3^1/_2$" x 8" Cylinder, Hoses,
Fittings & Stroke Control Spacers
Skid Shoes: Wings Reversible & Center, Both Replaceable
Optional Front and Rear Shielding:
Single or Double Chain, or Rubber Guard
Optional Deck Rings - $^1/_2$" x 3" Fully Welded
Optional Green or Red Paint

SEE NEXT PAGE FOR PRICING.

See pg. 61 for optional pricing and color choices

See pg. 72 for Available Hitches

Gearbox HP rating is based on in field use and performance

WARNING!

Rotary Cutters used in non-agricultural areas must be equipped with front & rear guards. The possibility of thrown objects can be hazardous to persons or property.

Rotary Cutters - 15'

7 YEAR Limited Gearbox Warranty*

RC6615 - 15' Extra-Heavy Duty Smooth Top

50-250 HP

MODEL NUMBER	DESCRIPTION		APPROX. MACHINE WEIGHT	LIST PRICE
RC6615	**15' ROTARY CUTTER - 540 rpm**		4522#	$ 18,951
RCM6615	**15' ROTARY CUTTER - 1000 rpm**		4522#	$ 19,037
ADD OPTION NUMBER	**Choose One Front Guard**			
-01	Single Row Chain Guard	(330-279A)	226#	$ 452
-02	Rubber Guard	(330-314A)	155#	$ 392
-03	Double Row Chain Guard	(330-280A)	248#	$ 580
-04	Double Row Chain Guard w/Cable	(330-281A)	253#	$ 644
	Choose One Wheel & Axle Assembly			
-12	6 ea. Laminated Tail Wheels with Dual Axle		504#	$ 2,547
-14	6 ea. Used Airplane Tires with Dual Axle		656#	$ 2,819
-15	6 ea. Recapped Airplane Tires with Dual Axle		656#	$ 3,300
-16	6 ea. Recapped Foam Filled Airplane Tires with Dual Axle		736#	$ 3,709
-22	8 ea. Used Airplane Tires with Dual Axle		736#	$ 3,358
-23	6 ea. Used Foam Filled Airplane Tires with Dual Axle		736#	$ 3,230
	If 540 RPM - Choose One Driveline Package - Main Driveline - 1 3/8" - 6 Spline			
-33	Main: Conventional U-Joint	Wing: Cat. 5 Slip-Clutch	42#	$ 1,154
-34	Main: Constant Velocity U-Joint, Cat. 6	Wing: Cat. 5 Slip-Clutch	75#	$ 1,619
	If 1000 RPM - Choose One Driveline Package - Main Driveline			
-33	Main: Conventional U-Joint, $1^3/_8$"-21 Spline	Wing: Cat. 5 Slip-Clutch	42#	$ 1,154
-34	Main: CV U-Joint, Cat. 6, $1^3/_8$"-21 Spline	Wing: Cat. 5 Slip-Clutch	75#	$ 1,619
-36	Main: CV U-Joint, Cat. 6, $1^3/_4$"-20 Spline	Wing: Cat. 5 Slip-Clutch	75#	$ 1,764
	Choose One Rear Guard			
-41	Single Row Chain Guard	(330-282A)	104#	$ 282
-42	Rubber Deflector	(330-315A)	58#	$ 187
-43	Double Row Chain Guard	(330-283A)	112#	$ 396
-44	Double Row Chain Guard w/Cable	(330-284A)	117#	$ 459
	You May Choose a Winch Option			
-51	Used to fold wings in a hydraulic failure	(330-295A)	40#	$ 529
	You Must Choose a Deck Ring Option			
-60	No Deck Rings		0#	$ 0
-61	Deck Rings		200#	$ 594
	You Must Choose a Hitch Clevis Option			
-70	Standard Clevis - Up & Down Swivel		77#	$ 0
-71	Double Swivel Clevis - Up, Down & Side to Side Swivel		52#	$ 118
-72	Bar-Tite Clevis - Bolts & Clamps to Drawbar Up & Down & Side to Side Swivel		68#	$ 263
	You May Choose A Color Option			
-81	Green			
-82	Orange			
-83	Red			
	You May Choose a Shredder Option			
-90	Shredder Kit*			$ 0

*This kit will be factory installed when ordered with the cuttter and this option number. It replaces the blade and stumpjumper configuration, which is priced in the base price. For separate pricing, see page 61.

Gearbox HP rating is based on in field use and performance

WARNING!

Rotary Cutters used in non-agricultural areas must be equipped with front & rear guards. The possibility of thrown objects can be hazardous to persons or property.

Rotary Cutters - 15'

7 YEAR Limited Gearbox Warranty

RCB6615 - 15' Extra-Heavy Duty Smooth Top with Rephasing Wing Axle Cylinders

50-250 HP

DOMINATOR

Working Width: 15'
Transport Width: 9'1" Minimum
Overall Width: 15'8"
Overall Length: 17'1"
Hitch: Pull-Type, Self-Leveling Hitch & Standard Clevis
Clevis: Standard, Up and Down Swivel
Tongue Jack
Cutting Height: 2" - 14"
Cutting Capacity: $4^1/_2$"
Deck Height: 12"
Deck Thickness: 7 Gauge Bottom, 10 Gauge Top
Side Skirt Thickness: $^1/_4$", Replaceable
Slow Moving Vehicle Sign

Gearbox: 540 rpm: Splitter 250 HP; Center & Wings 210 HP
1000 rpm: Splitter 250 HP; Center & Wings 210 HP
Gearbox Input Shaft: $1^3/_4$" - 20 Spline
Gearbox Output Shaft: $2^3/_8$"
Input Driveline: Constant Velocity U-Joint Cat. 6, Splined or Conventional Cat. 5, Star Profile; 540 or 1000 RPM
Connecting Driveline: Cat. 5 Slip-Clutch,
Stump-Jumper: $^3/_{16}$", Round, Dish Shaped, 1" Steel Plate Support
Blades: 2 per Section, $^1/_2$" x 4" Heat Treated Free Swinging Alloy Steel with Uplift
Blade Bolt: Keyed with Hardened Flatwasher & Lock Nut
Blade Overlap: 6"
Blade Speed:
540 rpm: Center & Wings: 16,300 fpm
1000 rpm: Center: 16,300; Wings: 16,000 fpm
Individual Spring-Cushioned Wheel Arms
6 or 8 Wheel Option
Tire Options:
6" x 21" Laminated Tires
24" Recapped Airplane Tires
29" x 7.7" x 15" Used Aircraft Tires
Tapered Roller Bearings & Cast Iron 5-Bolt Hubs w/$1^3/_4$" Shaft
Wing Transport Lock
Wing Hydraulics: 3" x 8" Cylinder, Hoses & Fittings
Rephasing Wing Axle Cylinders
Height Adjustments: $3^1/_2$" x 8" Cylinder, Hoses, Fittings & Stroke Control Spacers
Skid Shoes: Wings Reversible & Center, Both Replaceable
Wing Skid Shoes: AR400 Steel
Optional Front and Rear Shielding:
Single or Double Chain, Rubber Guard, or Dbl Chain w/Cable
Optional Deck Rings - $^1/_2$" x 3" Fully Welded
Optional Green or Red Paint

SEE NEXT PAGE FOR PRICING.

Gearbox HP rating is based on in field use and performance

See pg. 63 for optional pricing and color choices

See pg. 72 for Available Hitches

WARNING!

Rotary Cutters used in non-agricultural areas must be equipped with front & rear guards. The possibility of thrown objects can be hazardous to persons or property.

Rotary Cutters - 15'

7 YEAR Limited Gearbox Warranty

RCB6615 - 15' Extra-Heavy Duty Smooth Top with Rephasing Wing Axle Cylinders

50-250 HP

MODEL NUMBER	DESCRIPTION		APPROX. MACHINE WEIGHT	LIST PRICE
RCB6615	15' ROTARY CUTTER - 540 rpm		4600#	$ 22,440
RCBM6615	15' ROTARY CUTTER - 1000 rpm		4600#	$ 22,526
ADD OPTION NUMBER	**Choose One Front Guard**			
-01	Single Row Chain Guard	(330-279A)	226#	$ 452
-02	Rubber Guard	(330-314A)	155#	$ 392
-03	Double Row Chain Guard	(330-280A)	248#	$ 580
-04	Double Row Chain Guard w/Cable	(330-281A)	253#	$ 644
	Choose One Wheel & Axle Assembly			
-12	6 ea. Laminated Tail Wheels		504#	$ 2,547
-14	6 ea. Used Airplane Tires		656#	$ 2,819
-15	6 ea. Recapped Airplane Tires		656#	$ 3,300
-16	6 ea. Recapped Foam Filled Airplane Tires		736#	$ 3,709
-22	8 ea. Used Airplane Tires		736#	$ 3,358
-23	6 ea. Used Foam Filled Airplane Tires		736#	$ 3,230
-26	8 ea. Used Airplane Tires w/Walking Tandem Center and Wing		836#	$ 3,528
-27	8 ea. Laminated Tailwheels w/Walking Tandem Center Axle and Wing		684#	$ 3,439
-28	8 ea. Used Foam Filled Airplane Tires w/Walking Tandem Center Axle and Wing		916#	$ 4,384
-29	8 ea. Recapped Airplane Tires w/Walking Tandem Center Axle and Wing		836#	$ 4,350
	If 540 RPM - Choose One Driveline Package - Main Driveline: 1 3/8" - 6 Spline			
-33	Main: Conventional U-Joint	Wing: Cat. 5 Slip-Clutch	42#	$ 1,154
-34	Main: Constant Velocity U-Joint, Cat. 6	Wing: Cat. 5 Slip-Clutch	75#	$ 1,619
	If 1000 RPM - Choose One Driveline Package - Main Driveline			
-33	Main: Conventional U-Joint, $1^3/_8$"-21 Spline	Wing: Cat. 5 Slip-Clutch	42#	$ 1,154
-34	Main: CV U-Joint, Cat. 6, $1^3/_8$"-21 Spline	Wing: Cat. 5 Slip-Clutch	75#	$ 1,619
-36	Main: CV U-Joint, Cat. 6, $1^3/_4$"-20 Spline	Wing: Cat. 5 Slip-Clutch	75#	$ 1,764
	Choose One Rear Guard			
-41	Single Row Chain Guard	(330-282A)	104#	$ 282
-42	Rubber Deflector	(330-315A)	58#	$ 187
-43	Double Row Chain Guard	(330-283A)	112#	$ 396
-44	Double Row Chain Guard w/Cable	(330-284A)	117#	$ 459
	You May Choose a Winch Option			
-51	Used to fold wings in a hydraulic failure	(330-414A)	40#	$ 532
	You Must Choose a Deck Ring Option			
-60	No Deck Rings		0#	$ 0
-61	Deck Rings		200#	$ 594
	You Must Choose a Hitch Clevis Option			
-70	Standard Clevis - Up & Down Swivel		77#	$ 0
-71	Double Swivel Clevis - Up, Down & Side to Side Swivel		52#	$ 118
-72	Bar-Tite Clevis - Bolts & Clamps to Drawbar Up & Down & Side to Side Swivel		68#	$ 263
	You May Choose A Color Option			
-81	Green			
-82	Orange			
-83	Red			
	You May Choose a Shredder Option			
-90	Shredder Kit*[A]			$ 0
-91	Baffle Kit			$ 567
-92	Shredder[A] & Baffle Kit			$ 567

Gearbox HP rating is based on in field use and performance

*This kit will be factory installed when ordered with the cuttter and this option number. It replaces the blade and stumpjumper configuration, which is priced in the base price.
[A] The Shredder Kit cannot be used in conjunction with Deck Rings.

WARNING!

Rotary Cutters used in non-agricultural areas must be equipped with front & rear guards. The possibility of thrown objects can be hazardous to persons or property.

Rotary Cutters - 10'

RC6610- 10' Extra-Heavy Duty Offset

50-250 HP

DOMINATOR

Offset: Right Wing Model
Working Width: 10'6"
Transport Width: 7'6$^1/_2$" Minimum
Overall Width: 11'
Overall Length: 16'5"
Hitch: Pull-Type, Self-Leveling Hitch & Clevis
Clevis: Standard, Up and Down Swivel
Tongue Jack
Cutting Height: 2" - 14"
Cutting Capacity: 4$^1/_2$"
Deck Height: 12"
Deck Thickness: 7 Gauge Bottom, 10 Gauge Top
Side Skirt Thickness: $^1/_4$", Replaceable

Gearbox: 540 rpm: Splitter 250 HP; Center & Wing 210 HP
1000 rpm: Splitter 250 HP; Center & Wing 210 HP
Gearbox Input Shaft: 1$^3/_4$" 20 Spline
Gearbox Output Shaft: 2$^3/_8$"
*Weightbox on Left Side
Wing Hydraulics: 3" x 8" Cylinder, Hoses & Fittings
Height Adjustment: 3$^1/_2$" x 8" Cylinder, Hoses, Fittings & Stroke Control Spacers
Input Driveline: Constant Velocity U-Joint Cat. 6, Splined or Conventional Cat. 5, 540 or 1000 RPM
Connecting Driveline: Cat. 4 or 5 w/Slip-Clutch
Stump-Jumper: $^3/_{16}$", Round, Dish Shaped, 1" Steel Plate Support
Blades: 2 per Section, $^1/_2$" x 4" Heat Treated Free Swinging Alloy Steel with Uplift
Blade Bolt: Keyed with Hardened Flatwasher & Lock Nut
Blade Overlap: 6"
Blade Speed:
540 rpm: Center & Wings: 16,300 fpm
1000 rpm: Center: 16,300; Wings: 16,000 fpm
5 Wheels: 4 center, 1 wing, bolt in spindles
6 Wheels: 4 center, 2 wing, bolt in spindles
Individual Spring Cushioned Wheel Arms
Tire Options: 6" x 21" Laminated Tires
24" Recapped Airplane Tires
29" x 7.7" x15" Used Aircraft Tires w/ or w/o Foam
Tapered Roller Bearings & Cast Iron 5-Bolt Hubs w/1$^3/_4$" Shaft
Wing Transport Locks
Skid Shoes: Wing and Main, Replaceable
Optional Front & Rear Shielding:
Single or Double Chain, or Rubber Guard
Optional Deck Rings - $^1/_2$" x 3" Fully Welded

SEE NEXT PAGE FOR PRICING.

Gearbox HP rating is based on in field use and performance

See pg. 65 for additional accessories
See pg. 72 for available hitches

WARNING!
Rotary Cutters used in non-agricultural areas must be equipped with front & rear guards. The possibility of thrown objects can be hazardous to persons or property.

Rotary Cutters - 10'

RC6610 - 10' Extra-Heavy Duty Offset

50-250 HP

DOMINATOR

MODEL NUMBER	BASE UNIT		APPROX. MACHINE WEIGHT	LIST PRICE
RC6610	**10' ROTARY CUTTER - OFFSET - 540 rpm**		4432#	$ 16,122
RCM6610	**10' ROTARY CUTTER - OFFSET - 1000 rpm**		4432#	$ 16,195
ADD OPTION NO.	**Choose One Front Guard**			
-01	Single Row Chain Guard	(330-512A)	183#	$ 335
-02	Rubber Guard	(330-513A)	125#	$ 248
-03	Double Row Chain Guard	(330-514A)	201#	$ 475
-04	Double Row Chain Guard w/Cable	(330-515A)	204#	$ 516
	Choose One Wheel & Axle Assembly			
-12	5 ea. Laminated Tail Wheels with Dual Axle		408#	$ 2.072
-14	5 ea. Used Airplane Tires with Dual Axle		525#	$ 2,300
-15	5 ea. Recapped Aircraft with Dual Axle		525#	$ 2,751
-16	5 ea. Recapped Foam Filled Aircraft with Dual Axle		740#	$ 3,091
-23	5 ea. Used Foam Filled Airplane Tires w/Dual Axle		740#	$ 2,646
-20	6 ea. Laminated Tailwheels with Dual Axle		478#	$ 2,330
-22	6 ea. Used Airplane Tires with Dual Axle		565#	$ 2,606
	Choose One Driveline Package			
-33	Conventional U-Joint - 540 rpm Cat. 5 1 3/8" - 6 Spline		42#	$ 853
-33	Conventional U-Joint - 1000 rpm Cat. 5 1 3/8" - 21 Spline		42#	$ 853
-34	Constant Velocity U-Joint - 540 rpm Cat. 6 1-3/8" - 6 Spline		75#	$ 1,405
-34	Constant Velocity U-Joint - 1000 rpm Cat. 6 1-3/8" - 21 Spline		75#	$ 1,405
-36	Constant Velocity U-Joint - 1000 rpm Cat. 6 1-3/4" - 20 Spline		75#	$ 1,527
	Choose One Rear Guard			
-41	Single Row Chain Guard	(330-524A)	83#	$ 204
-42	Rubber Deflector	(330-525A)	46#	$ 129
-43	Double Row Chain Guard	(330-526A)	89#	$ 227
-44	Double Row Chain Guard w/Cable	(330-527A)	92#`	$ 268
	You May Choose a Winch Option			
-51	Used to fold wings in a hydraulic failure	(330-414A)	40#	$ 532
	You Must Choose a Deck Ring Option			
-60	No Deck Rings		0#	$ 0
-61	Deck Rings		131#	$ 442
	You Must Choose a Hitch Clevis Option			
-70	Standard Clevis - Up & Down Swivel		77#	$ 0
-71	Double Swivel Clevis - Up, Down & Side to Side Swivel		52#	$ 118
-72	Bar-Tite Clevis - Bolts & Clamps to Drawbar Up, Down & Side to Side Swivel		68#	$ 263
	You May Choose A Color Option			
-81	Green			
-82	Orange			
-83	Red			

Gearbox HP rating is based on in field use and performance

WARNING!

Rotary Cutters used in non-agricultural areas must be equipped with front & rear guards. The possibility of thrown objects can be hazardous to persons or property.

Rotary Cutters - 10'

7 YEAR Limited Gearbox Warranty

RCB6610- 10' Extra-Heavy Duty Offset with Right Wing Rephasing Cylinder Axle

50-250 HP

DOMINATOR

Offset: Right Wing Model
Working Width: 10'6"
Transport Width: 8' Minimum
Overall Width: 11'
Overall Length: 15'1"
Hitch: Pull-Type, Self-Leveling Hitch & Clevis
Clevis: Standard, Up and Down Swivel
Tongue Jack
Cutting Height: 2" - 14"
Cutting Capacity: $4^1/_2$"
Deck Height: 12"
Deck Thickness: 7 Gauge Bottom, 10 Gauge Top
Side Skirt Thickness: $^1/_4$", Replaceable

Gearbox: 540 rpm: Splitter 250 HP; Center & Wing 210 HP
1000 rpm: Splitter 250 HP; Center & Wing 210 HP
Gearbox Input Shaft: $1^3/_4$" 20 Spline
Gearbox Output Shaft: $2^3/_8$"
*Weightbox on Left Side
Wing Hydraulics: 3" x 12" Cylinder, Hoses & Fittings
Height Adjustment: $3^1/_2$" x 8" Cylinder, Hoses, Fittings & Stroke Control Spacers
Input Driveline: Constant Velocity U-Joint Cat. 6, Splined or Conventional Cat. 5, Star Profile; 540 or 1000 RPM
Connecting Driveline: Cat. 5 Slip-Clutch, Star Profile
Stump-Jumper: $^3/_{16}$", Round, Dish Shaped, 1" Steel Plate Support
Blades: 2 per Section, $^1/_2$" x 4" Heat Treated Free Swinging Alloy Steel with Uplift
Blade Bolt: Keyed with Hardened Flatwasher & Lock Nut
Blade Overlap: 6"
Blade Speed:
540 rpm: Center & Wings: 16,300 fpm
1000 rpm: Center: 16,300; Wings: 16,000 fpm
5 Wheels: 4 center, 1 wing, bolt in spindles
6 Wheels: 4 center, 2 wing, bolt in spindles
Spring-Cushioned Transport Axle w/Optional Walking Tandem
Tire Options: 6" x 21" Laminated Tires
29" x 7.7" x15" Used Aircraft Tires w/ or w/o Foam
Tapered Roller Bearings & Cast Iron 5-Bolt Hubs w/$1^3/_4$" Shaft
Wing Transport Locks
Skid Shoes: Wing and Main, Replaceable
Optional Front & Rear Shielding:
Single or Double Chain, or Rubber Guard
Optional Deck Rings - $^1/_2$" x 3" Fully Welded

SEE NEXT PAGE FOR PRICING.

Gearbox HP rating is based on in field use and performance

See pg. 67 for additional accessories
See pg. 67 for available hitches

WARNING!

Rotary Cutters used in non-agricultural areas must be equipped with front & rear guards. The possibility of thrown objects can be hazardous to persons or property.

Rotary Cutters - 10'

RCB6610 - 10' Extra-Heavy Duty Offset with Right Wing Rephasing Cylinder Axle

50-250 HP

DOMINATOR

MODEL NUMBER	BASE UNIT		APPROX. MACHINE WEIGHT	LIST PRICE
RCB6610	10' ROTARY CUTTER - OFFSET - 540 rpm		4795#	$ 19,089
RCBM6610	10' ROTARY CUTTER - OFFSET - 1000 rpm		4795#	$ 19,176
ADD OPTION NO.	**Choose One Front Guard**			
-01	Single Row Chain Guard	(330-512A)	183#	$ 335
-02	Rubber Guard	(330-513A)	125#	$ 248
-03	Double Row Chain Guard	(330-514A)	201#	$ 475
-04	Double Row Chain Guard w/ Cable	(330-515A)	204#	$ 516
	Choose One Wheel & Axle Assembly			
-12	5 ea. Laminated Tail Wheels		408#	$ 2,072
-14	5 ea. Used Airplane Tires		525#	$ 2,300
-15	5 ea. Recapped Airplane Tires		525#	$ 2,751
-16	5 ea. Recapped Foam Filled Airplane Tires		740#	$ 3,091
-22	6 ea. Used Airplane Tires		565#	$ 2,606
-23	5 ea. Foam Filled Airplane Tires		740#	$ 2,646
-26	6 ea. Used Airplane Tires w/Walking Tandem Center and Wing Axle		701#	$ 2,715
-27	6 ea. Laminated Tires w/Walking Tandem Center and Wing Axle		584#	$ 2,606
-28	6 ea. Foam Filled Airplane Tires w/Walking Tandem Ctr & Wing Axle		732#	$ 3,374
-29	6 ea. Recapped Airplane Tires w/Walking Tandem Center and Wing Axle		669#	$ 3,347
	Choose One Driveline Package			
-33	Conventional U-Joint - 540 rpm Cat. 5 1 3/8" - 6 Spline		42#	$ 853
-33	Conventional U-Joint - 1000 rpm Cat. 5 1 3/8" - 21 Spline		42#	$ 853
-34	Constant Velocity U-Joint - 540 rpm Cat. 6 1-3/8" - 6 Spline		75#	$ 1,405
-34	Constant Velocity U-Joint - 1000 rpm Cat. 6 1-3/8" - 21 Spline		75#	$ 1,405
-36	Constant Velocity U-Joint - 1000 rpm Cat. 6 1-3/4" - 20 Spline		75#	$ 1,527
	Choose One Rear Guard			
-41	Single Row Chain Guard	(330-046A)	83#	$ 204
-42	Rubber Deflector	(330-047A)	46#	$ 129
-43	Double Row Chain Guard	(330-048A)	89#	$ 227
	You May Choose a Winch Option			
-51	Used to fold wings in a hydraulic failure	(330-295A)	40#	$ 529
	You Must Choose a Deck Ring Option			
-60	No Deck Rings		0#	$ 0
-61	Deck Rings		131#	$ 402
	You Must Choose a Hitch Clevis Option			
-70	Standard Clevis - Up & Down Swivel		77#	$ 0
-71	Double Swivel Clevis - Up, Down & Side to Side Swivel		52#	$ 118
-72	Bar-Tite Clevis - Bolts & Clamps to Drawbar Up, Down & Side to Side Swivel		68#	$ 263
-72	Bar-Tite Clevis - Bolts & Clamps to Drawbar Up, Down & Side to Side Swivel		20#	$ 240
	You May Choose A Color Option			
-81	Green			
-82	Orange			
-83	Red			

Gearbox HP rating is based on in field use and performance

WARNING!

Rotary Cutters used in non-agricultural areas must be equipped with front & rear guards. The possibility of thrown objects can be hazardous to persons or property.

Rotary Cutters- Offset

RC5014 - 14' Heavy Duty Offset

70-250 HP

Commander

Working Width: 14'
Transport Width: 8' 9"
Overall Width: 15'
Overall Length: 19' 3"
Hitch: Pull-Type, Self-Leveling Hitch & Clevis
Tongue Jack
Cutting Height: 2" - 14"
Cutting Capacity: 3"
Deck Height: $10^{1}/_{2}$"
Deck Thickness: $^{3}/_{16}$"
Side Skirt Thickness: $^{1}/_{4}$"
Gearbox: 540 rpm: Center 250 HP; Wing 210 HP
1000 rpm: Center 250 HP; Wing 210 HP

Gearbox Input Shaft: $1^{3}/_{4}$" 20 Spline
Gearbox Output Shaft: $2^{3}/_{8}$"
Weightbox on Left Side
Input Driveline: Constant Velocity U-Joint Cat. 6, Splined or Conventional Cat. 5, Star Profile; 540 or 1000 RPM
Connecting Driveline: Cat. 5 Slip-Clutch
Stump-Jumper: $^{3}/_{16}$", Round, Dish Shaped
Blades: 2 per Section, $^{1}/_{2}$" x 4" Heat Treated Free Swinging Alloy Steel with Uplift
Blade Bolt: Keyed with Hardened Flatwasher & Lock Nut
Blade Overlap: 6"
Blade Speed:
540 rpm: Center: 17,377 fpm, Wing: 17,329 fpm
1000 rpm:Center: 18,165 fpm, Wing: 18,317 fpm
5 or 6 Wheel Option, with Spring-Cushioned Center Axle
Tire Options: 6" x 21" Laminated Tires
27" x 7.75-15 Used Aircraft Tires w/wo foam
15" Rims
Tapered Roller Bearings & Cast Iron 5-Bolt Hubs with $1^{3}/_{4}$" Shaft
Wing Transport Locks
Wing Hydraulics: $3^{1}/_{2}$" x 12" Cylinder, Hoses & Fittings
Height Adjustments: 4" x 8" Cylinder, Hose, Fittings & Stroke Control Spacers
Skid Shoes: Wing & Center Section, Both Replaceable
Optional Front and Rear Shielding:
Single or Double Chain, or Rubber Guard
Optional Deck Rings - $^{1}/_{2}$" x 3" Fully Welded

For 1000 RPM, change prefix to RCM

SEE NEXT PAGE FOR PRICING.

Gearbox HP rating is based on in field use and performance

See pg. 69 for optional pricing and color options
See pg. 72 for available hitches

WARNING!

Rotary Cutters used in non-agricultural areas must be equipped with front & rear guards. The possibility of thrown objects can be hazardous to persons or property.

Rotary Cutters-Offset

RC5014 - 14' Heavy Duty Offset

70-250 HP

MODEL NUMBER	DESCRIPTION		APPROX. MACHINE WEIGHT	LIST PRICE
RC5014	**14' ROTARY CUTTER - OFFSET - 540 rpm**		6233#	$ 17,100
RCM5014	**14' ROTARY CUTTER - OFFSET - 1000 rpm**		6233#	$ 17,100
ADD				
OPTION NUMBER	**Choose One Front Guard**			
-01	Single Row Chain Guard	(318-816A)	141#	$ 371
-02	Rubber Guard	(318-817A)	77#	$ 280
-03	Double Row Chain Guard	(318-818A)	155#	$ 517
	Choose One Wheel & Axle Assembly			
-12	5 ea. Laminated Tail Wheels with Dual Axle		550#	$ 2,785
-14	5 ea. Used Airplane Tires with Dual Axle		677#	$ 3,014
-23	5 ea. Foam Filled Airplane Tires		744#	$ 3,357
-20	6 ea. Laminated Tail Wheels with Dual Axle		668#	$ 2,986
-22	6 ea. Used Airplane Tires with Dual Axle		744#	$ 3,260
-24	6 ea. Foam Filled Airplane Tires		832#	$ 3,675
	Choose One Driveline Package			
-31	Conventional U-Joint - 540 rpm - 1-3/8" - 6 Spline		42#	$ 1,154
-32	Constant Velocity U-Joint - Cat. 6, 540 rpm - 1-3/8" - 6 Spline		75#	$ 1,476
-31	Conventional U-Joint - 1000 rpm - 1-3/8" - 21 Spline		42#	$ 1,154
-32	Constant Velocity U-Joint - Cat. 6, 1000 rpm - 1-3/8" - 21 Spline		75#	$ 1,476
-33	Consant Velocity U-Joint - Cat. 6, 1000 rpm - 1-3/4" - 20 Spline		75#	$ 1,633
	Choose One Rear Guard			
-41	Single Row Chain Guard	(318-823A)	79#	$ 259
-42	Rubber Deflector	(318-824A)	86#	$ 192
-43	Double Row Chain Guard	(318-825A)	100#	$ 328
	You Must Choose Deck Rings or No Deck Rings			
-60	No Deck Rings		0#	$ 0
-61	Deck Rings		131#	$ 594
	You Must Choose A Hitch Clevis Option			
-70	Standard Clevis		77#	$ 0
-71	Swivel Hitch		52#	$ 118
-72	Bar Tite Hitch		68#	$ 263
	You May Choose A Color Option			
-81	Green			
-83	Red			
ACCESSORIES AVAILABLE THROUGH THE PARTS DEPT.				
312-315A	**3 SPOOL CONTROL VALVE KIT** For use with single duplex outlet		40#	$ 909
312-316A	**SELECTOR CONTROL VALVE KIT** For use with two duplex outlets		35#	$ 262

Gearbox HP rating is based on in field use and performance

WARNING!

Rotary Cutters used in non-agricultural areas must be equipped with front & rear guards. The possibility of thrown objects can be hazardous to persons or property.

Rotary Cutters - 20'

7 YEAR Limited Gearbox Warranty*

RC5020 - 20' Heavy Duty

70-250 HP

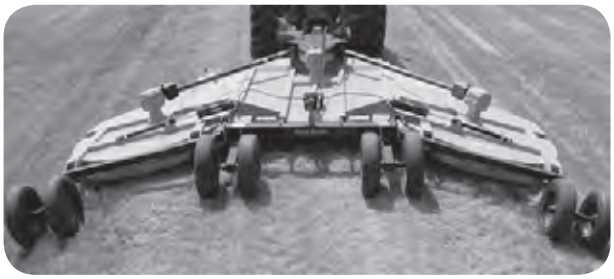

Commander

Working Width: 20'
Transport Width: 8' 9"
Overall Width: 20' 9½"
Overall Length: 19' 3"
Hitch: Pull-Type, Self-Leveling Hitch & Clevis
Tongue Jack
Cutting Height: 2" - 14"
Cutting Capacity: 3"
Deck Height: 10½"
Deck Thickness: 3/16"
Side Skirt Thickness: ¼"
Gearbox: 540 rpm: Center 250 HP; Wings 210 HP
1000 rpm: Center 250 HP; Wings 210 HP Gearbox
Gearbox Input Shaft: 1¾" 20 Spline
Gearbox Output Shaft: 2⅜"
Input Driveline: Constant Velocity U-Joint Cat. 6, Splined or Conventional Cat. 5, Star Profile; 540 or 1000 RPM
Connecting Driveline: Cat. 5 Slip-Clutch
Stump-Jumper: 3/16", Round, Dish Shaped
Blades: 2 per Section, ½" x 4" Heat Treated Free Swinging Alloy Steel with Uplift
Blade Bolt: Keyed with Hardened Flatwasher & Lock Nut
Blade Overlap: 6"
Blade Speed:
540 rpm: Center: 17,377 fpm, Wings: 17,329 fpm
1000 rpm: Center: 18,165 fpm, Wings: 18,317 fpm
6 or 8 Wheel Option, with Spring-Cushioned Center Axle
Tire Options:
6" x 21" Laminated Tires
27" x 7.75-15 Used Aircraft Tires
Tapered Roller Bearings & Cast Iron 5-Bolt Hubs w/1¾" Shaft
Wing Transport Locks
Wing Hydraulics: 3½" x 12" Cylinder, Hoses & Fittings
Height Adjustments: 4" x 8" Cylinder, Hose, Fittings & Stroke Control Spacers
Skid Shoes: Wings Reversible & Center, Both Replaceable
Optional Front and Rear Shielding:
Single or Double Chain, or Rubber Guard
Optional Deck Rings - ½" x 3" Fully Welded

For 1000 RPM, change prefix to RCM

MODEL NUMBER	DESCRIPTION	APPROX. MACHINE WEIGHT	LIST PRICE
RC5020-011232416070	**20' ROTARY CUTTER - 540 rpm** Single Front Chain Guard (01) 6 ea. Laminated Tires, Dual Axle (12) Constant Velocity Input Driveline, Cat. 6 (32) Single Rear Chain Guard (41) No Deck Rings (60) Standard Clevis (70)	6528#	$ 26,688
RC5020-021232426070	**20' ROTARY CUTTER - 540 rpm** Front Rubber Guard (02) 6 ea. Laminated Tires, Dual Axle (12) Constant Velocity Input Driveline, Cat. 6 (32) Rear Rubber Guard (42) No Deck Rings (60) Standard Clevis (70)	6442#	$ 26,545
RC5020-011432416070	**20' ROTARY CUTTER - 540 rpm** Single Front Chain Guard (01) 6 ea. Used Airplane Tires, Dual Axle (14) Constant Velocity Input Driveline, Cat. 6 (32) Single Rear Chain Guard (41) No Deck Rings (60) Standard Clevis (70)	6680#	$ 26,964
RC5020-021432426070	**20' ROTARY CUTTER - 540 rpm** Front Rubber Guard (02) 6 ea. Used Airplane Tires, Dual Axle (14) Constant Velocity Input Driveline, Cat. 6 (32) Rear Rubber Guard (42) No Deck Rings (60) Standard Clevis (70)	6594#	$ 26,821

See pg. 71 for optional pricing and color option
See pg. 72 for available hitches

Gearbox HP rating is based on in field use and performance

WARNING!

Rotary Cutters used in non-agricultural areas must be equipped with front & rear guards. The possibility of thrown objects can be hazardous to persons or property.

Rotary Cutters - 20'

RC5020 - 20' Heavy Duty

70-250 HP

TO BUILD A UNIT NOT LISTED IN CONFIGURED UNIT PRICING, USE THE FOLLOWING.

MODEL NUMBER	DESCRIPTION	APPROX. MACHINE WT	LIST PRICE
RC5020	20' ROTARY CUTTER - 540 rpm	5385#	$ 20,600
RCM5020	20' ROTARY CUTTER - 1000 rpm	5385#	$ 20,600
ADD OPTION NO.	**Choose One Front Guard**		
-01	Single Row Chain Guard (318-439A)	211#	$ 513
-02	Rubber Guard (318-481A)	115#	$ 454
-03	Double Row Chain Guard (318-482A)	233#	$ 685
	Choose One Wheel & Axle Assembly		
-12	6 ea. Laminated Tail Wheels with Dual Axle	661#	$ 3,492
-14	6 ea. Used Airplane Tires with Dual Axle	813#	$ 3,768
-23	6 ea. Foam Filled Airplane Tires with Dual Axle	893#	$ 4,183
-20	8 ea. Laminated Tail Wheels with Dual Axle	801#	$ 3,916
-22	8 ea. Used Airplane Tires with Dual Axle	893#	$ 4,284
-24	8 ea. Foam Filled Airplane Tires with Dual Axle	999#	$ 4,834
	Choose One Driveline Package - Main: CAT 5, Wing: CAT.5		
-31	Conventional U-Joint - 540 rpm - 1-3/8" - 6 Spline	42#	$ 1,344
-32	Constant Velocity U-Joint - Cat. 6, 540 rpm - 1-3/8" - 6 Spline	75#	$ 1,716
-31	Conventional U-Joint - 1000 rpm - 1-3/8" - 21 Spline	42#	$ 1,344
-32	Constant Velocity U-Joint - Cat. 6, 1000 rpm - 1-3/8" - 21 Spline	75#	$ 1,716
-33	Consant Velocity U-Joint - Cat. 6, 1000 rpm - 1-3/4" - 20 Spline	75#	$ 1,901
	Choose One Rear Guard		
-41	Single Row Chain Guard (318-440A)	119#	$ 367
-42	Rubber Deflector (318-483A)	129#	$ 283
-43	Double Row Chain Guard (318-484A)	150#	$ 463
	You Must Choose Deck Rings or No Deck Rings		
-60	No Deck Rings	0#	$ 0
-61	Deck Rings	200#	$ 894
	You Must Choose A Hitch Clevis Option		
-70	Standard Clevis	77#	$ 0
-71	Swivel Hitch	52#	$ 118
-72	Bar Tite Hitch	68#	$ 263
	You May Choose A Color Option		
-81	Green		
-82	Orange		
-83	Red		
	You May Choose A Shredder Option		
-90	Shredder / Fixed Blade*[A]	(157#)	$ 0
-91	Front Baffle Kit*	201#	$ 745
-92	Shredder / Fixed Blade / Baffle*[A]	44#	$ 745
	You May Choose A Baffle Kit Option[+]		
-45	Rear Baffles	209#	$ 400

Gearbox HP rating is based on in field use and performance

*This kit will be factory installed when ordered with the cutter and this option number.

[A] The Shredder and Fixed Blade replace the stumpjumper and blade configuration which is figured in the base price.

[+] Cannot be used with rear guarding.

See page 73 for additional accessories.

Rotary Cutters

Hitch Options - Folding Cutters

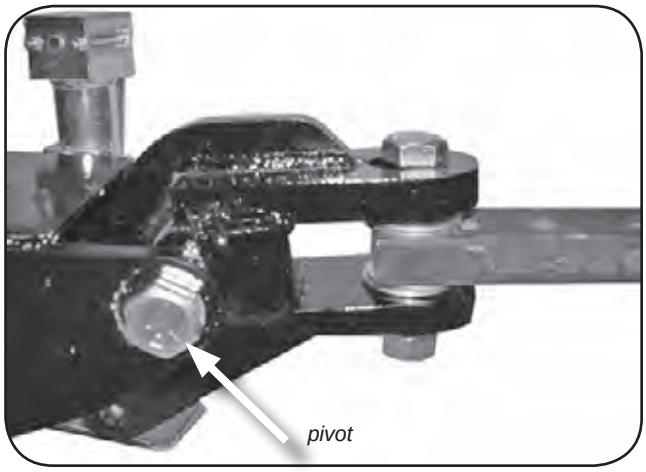

OPTION 70 - Standard Clevis

-Pivots up and down for uneven terrain

Part No. 330-225A

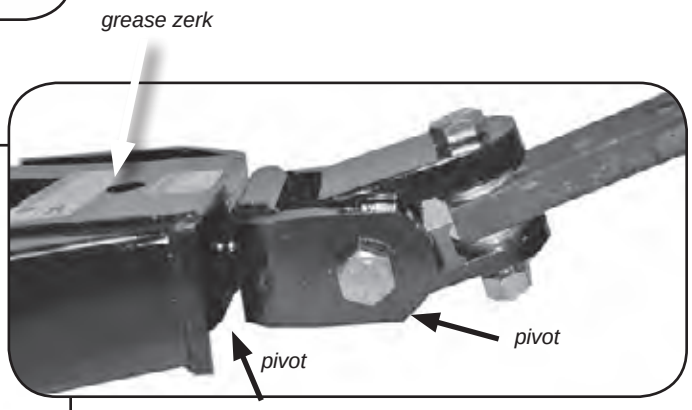

OPTION 71 - Double Swivel Clevis

-Swivels up and down, and side to side for uneven terrain

-Grease zerk on rotating shaft

Part No. 330-332A

. 72 for available hitches

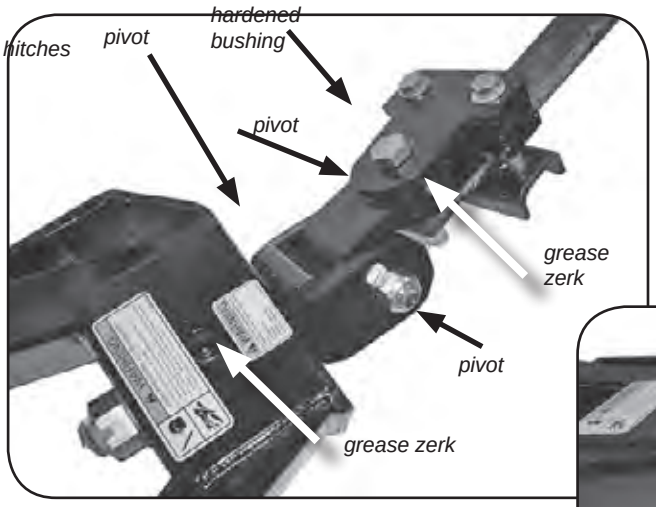

OPTION 72 - Bar-Tite™ Clevis

-Bolts tight to drawbar which eliminates any drawbar wear

-Hardened bushing with grease zerk on side to side movement

-Swivels up and down

-Grease zerk on rotating shaft

-Heat treated Components

Part No. 330-333A

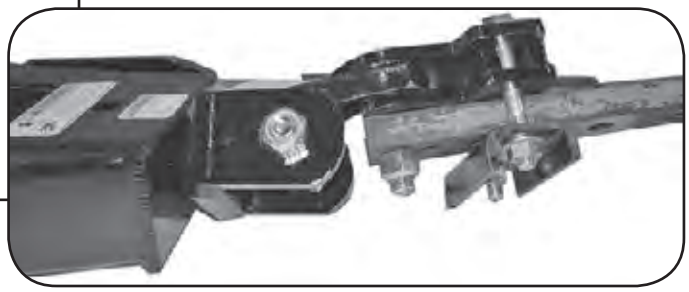

Rotary Cutters - 15'

ADDITIONAL ACCESSORIES FOR 55 AND 65 SERIES 15' AND 50 SERIES 20' ROTARY CUTTERS. AVAILABLE THROUGH PARTS DEPT. ONLY.

PART NUMBER	DESCRIPTION	APPROX. WEIGHT	LIST PRICE
312-315A	**3 SPOOL CONTROL VALVE KIT** For use with single duplex outlet	40#	$ 909
312-316A	**SELECTOR CONTROL VALVE KIT** For use with two duplex outlets	35#	$ 262
318-316A	**HYDRAULIC WING CONTROL KIT (for 15')** to hydraulically control each wing independently	8#	$ 85
318-553A	**HYDRAULIC WING CONTROL KIT - (for 20')** to hydraulically control each wing independently	8#	$ 95
330-291S	**SMV Kit** - RC55 and RC65 Series only	4#	$ 43
330-229A	**Weight Box Lock** - Locks the weight box on 10' wing Rotary Cutters		$ 95

Photo of Shredder Blade Kit

330-094A	**SHREDDER KIT** (RC5515 and RC6515) when ordered seperately		$ 1,503
318-958A	**SHREDDER KIT** (RC5020) when ordered seperately	526#	$ 1,950
330-114A	**FRONT BAFFLE KIT** (RC5020)	201#	$ 713
330-585A	**REAR BAFFLE KIT** (RC5020)	209#	$ 400
330-309A	**SHREDDER W/FIXED BLADE & BAFFLES** (RC5020) (SN 635287 & Above)		$ 3,068
330-308A	**SHREDDER W/FIXED BLADE** (RC5020) (SN 635287 & Above)		$ 2,376

WARNING!

Rotary Cutters used in non-agricultural areas must be equipped with front & rear guards. The possibility of thrown objects can be hazardous to persons or property.

Rotary Cutters

RCP2660 - Hydraulic Parallel Arm

75-150 HP Minimum Tractor Weight: 8000 lbs.

Gearbox: 540 or 1000 rpm
Cutting Width: 58"
Hitch: Cat. 2 & 3
  Clevis Type Lower Hitch
Deck Thickness: 10 Gauge
Minimum Cutting Height: 2"
Cutting Capacity: 2" Diameter
Stump Jumper: 3/16" x 21" Round, Dish Shaped

Blade Holder: 1" x 4"
Blades: 1/2" x 4"
Blade Bolt: Keyed w/Hardened Flat Washer & Lock Nut
Blade Tip Speed: 15,000 fpm
Blade Rotation: Clockwise
Horizontal Cutting Reach: 15'6" Maximum
Vertical Cutting Reach: 11'5" Maximum
Below Ground Level Reach: 9'1" Maximum
Operating Tilt Arc: 180 Degrees
2 Parallel Arm Cylinders with Hoses & Fittings
One Deck Cylinder with Hoses & Fittings
Hydraulic Outlets Needed: See specific model
One Hydraulic Breakaway with Reset
Transport Width: 10'1" Minimum
Driveline: Cat. 2
High Efficiency PTO Pump
Hydraulic Oil Capacity: 35 Gallons (Not included)
Hydraulic Oil Flow: 15 gpm
Overload Protection: Relief Valve
Case Drained Deck Motor
Oil Pressure Gauge
Return Line Filter
Tank Shut-Off Valve
Breather Cap/Dip Stick
2 Parking Stands
Auxiliary Weight Rack
Flow Control Valve

Now Available with Self Contained Hydraulic System

For 1000 RPM, change prefix to RCPM

MODEL NUMBER	DESCRIPTION	APPROX. MACHINE WEIGHT	SHIPPING WEIGHT	LIST PRICE
	UTILIZING THE TRACTOR'S HYDRAULIC SYSTEM			
RCP2660-01	**26 SERIES - 60" Width - 540 RPM** **HYDRAULIC DRIVEN PARALLEL ARM ROTARY CUTTER** Front & Rear Chain Guards Solenoid and Flow Control Valve for Operating Cylinders Electrically *(one set of outlets needed for this, and one set needed for Hydraulic Breakaway)*	1690#	1690#	$ 18,117
RCP2660-02	**26 SERIES - 60" Width - 540 RPM** **HYDRAULIC DRIVEN PARALLEL ARM ROTARY CUTTER** Front & Rear Chain Guards Hydraulic Hose Package for Hook-Up Direct to Tractor Hydraulics *(3 sets of outlets needed for this, and one set needed for Hydraulic Breakaway)*	1690#	1690#	$ 15,899
RCP2660-03	**26 SERIES - 60" Width - 540 RPM** **HYDRAULIC DRIVEN PARALLEL ARM ROTARY CUTTER** Front & Rear Chain Guards, Float Valve Solenoid and Flow Control Valve for Operating Cylinders Electrically *(one set of outlets needed for this, and one set needed for Hydraulic Breakaway)*	1690#	1690#	$ 18,235
	SELF-CONTAINED HYDRAULIC SYSTEM			
RCP2660-05	**26 SERIES - 60" Width - 540 RPM** **HYDRAULIC DRIVEN PARALLEL ARM ROTARY CUTTER** Front & Rear Chain Guards Solenoid Operates Cylinders Electrically *(One set of outlets needed for Hydraulic Breakaway)*	1690#	1690#	$ 19,559
RCP2660-06	**26 SERIES - 60" Width - 540 RPM** **HYDRAULIC DRIVEN PARALLEL ARM ROTARY CUTTER** Front & Rear Chain Guards, Float Valve Solenoid Operates Cylinders Electrically *(One set of outlets needed for Hydraulic Breakaway)*	1690#	1690#	$ 19,782
ADD OPTION NO.	**YOU MAY CHOOSE GAUGE WHEELS WITH OPTIONS 02, 03 & 06**			
-10	Gauge Wheels 2 Front and 1 Rear 13" x 5" Semi-Solid Gauge Wheels+ *This option allows the cutting deck to follow the contour of the ground*			$ 727
	YOU MUST ADD ONE WEIGHT BRACKET			
-70	For John Deere Weights (316-230A)			$ 157
-71	For Case Weights (316-231A)			$ 157
-72	For IH Weights (316-232A)			$ 157
-73	For Case IH Weights (316-233A)			$ 157
-74	For New Holland Weights (316-234A)			$ 157
ACCESSORY				
316-063A	Debris Guard - for use with tractors without a cab			$ 286

Gearbox HP rating is based on in field use and performance

WARNING!
Rotary Cutters used in non-agricultural areas must be equipped with front & rear guards. The possibility of thrown objects can be hazardous to persons or property.

Rotary Cutters

RCP3060 - Hydraulic Parallel Arm

95-175 HP Minimum Tractor Weight: 12,000 lbs.

Gearbox: 540 or 1000 rpm
Cutting Width: 58"
Hitch: Cat. 2 & 3
  Clevis Type Lower Hitch
Deck Thickness: 10 Gauge
Minimum Cutting Height: 2"
Cutting Capacity: 2" Diameter
Stump Jumper: 3/16" x 21" Round, Dish Shaped

Blade Holder: 1" x 4"
Blades: 1/2" x 4"
Blade Bolt: Keyed w/Hardened Flat Washer & Lock Nut
Blade Tip Speed: 15,000 fpm
Blade Rotation: Clockwise
Horizontal Cutting Reach: 18'10 1/2" Maximum
Vertical Cutting Reach: 13'5" Maximum
Below Ground Level Reach: 11' Maximum
Operating Tilt Arc: 180 Degrees
2 Parallel Arm Cylinders with Hoses & Fittings
One Deck Cylinder with Hoses & Fittings
Hydraulic Outlets Needed: See specific model
One Hydraulic Breakaway with Reset
Transport Width: 10'1" Minimum
Driveline: Cat. 2
High Efficiency PTO Pump
Hydraulic Oil Capacity: 35 Gallons (Not included)
Hydraulic Oil Flow: 15 gpm
Overload Protection: Relief Valve
Case Drained Deck Motor
Oil Pressure Gauge
Return Line Filter
Tank Shut-Off Valve
Breather Cap/Dip Stick
2 Parking Stands
Auxiliary Weight Rack
Flow Control Valve

Now Available with Self Contained Hydraulic System

For 1000 RPM, change prefix to RCPM

MODEL NUMBER	DESCRIPTION	APPROX. MACHINE WEIGHT	SHIPPING WEIGHT	LIST PRICE
	UTILIZING TRACTOR HYDRAULIC SYSTEM			
RCP3060-01	**30 SERIES - 60" Width - 540 RPM** **HYDRAULIC DRIVEN PARALLEL ARM ROTARY CUTTER** Front & Rear Chain Guards Solenoid and Flow Control Valve for Operating Cylinders Electrically *(one set of outlets needed for this, and one set needed for Hydraulic Breakaway)*	2225#	2225#	$ 19,280
RCP3060-02	**30 SERIES - 60" Width - 540 RPM** **HYDRAULIC DRIVEN PARALLEL ARM ROTARY CUTTER** Front & Rear Chain Guards Hydraulic Hose Package for Hook-Up Direct to Tractor Hydraulics *(3 sets of outlets needed for this, and one set needed for Hydraulic Breakaway)*	2225#	2225#	$ 17,062
RCP3060-03	**30 SERIES - 60" Width - 540 RPM** **HYDRAULIC DRIVEN PARALLEL ARM ROTARY CUTTER** Front & Rear Chain Guards, Float Valve Solenoid and Flow Control Valve for Operating Cylinders Electrically Float Valve *(one set of outlets needed for this, and one set needed for Hydraulic Breakaway)*	2225#	2225#	$ 19,398
	SELF-CONTAINED HYDRAULIC SYSTEM			
RCP3060-05	**30 SERIES - 60" Width - 540 RPM** **HYDRAULIC DRIVEN PARALLEL ARM ROTARY CUTTER** Front & Rear Chain Guards Solenoid Operates Cylinders Electrically *(one set of outlets needed for Hydraulic Breakaway)*	2225#	2225#	$ 20,722
RCP3060-06	**30 SERIES - 60" Width - 540 RPM** **HYDRAULIC DRIVEN PARALLEL ARM ROTARY CUTTER** Front & Rear Chain Guards, Float Valve Solenoid and Flow Control Valve for Operating Cylinders Electrically *(one set of outlets needed for Hydraulic Breakaway)*	2225#	2225#	$ 20,945
ADD OPTION NO.	**YOU MAY CHOOSE GAUGE WHEELS WITH OPTIONS 02, 03 & 06**			
-10	Gauge Wheels 2 Front and 1 Rear 13" x 5" Semi-Solid Gauge Wheels *This option allows the cutting deck to follow the contour of the ground*			$ 727
	YOU MUST ADD ONE WEIGHT BRACKET			
-70	For John Deere Weights (316-230A)			$ 157
-71	For Case Weights (316-231A)			$ 157
-72	For IH Weights (316-232A)			$ 157
-73	For Case IH Weights (316-233A)			$ 157
-74	For New Holland Weights (316-234A)			$ 157
ACCESSORY				
316-063A	Debris Guard - for use with tractors without a cab			$ 286

Gearbox HP rating is based on in field use and performance

WARNING!
Rotary Cutters used in non-agricultural areas must be equipped with front & rear guards. The possibility of thrown objects can be hazardous to persons or property.

Rotary Tillers

RTR05 Series Reverse-Till

Up to 25 HP Subcompact Tractors

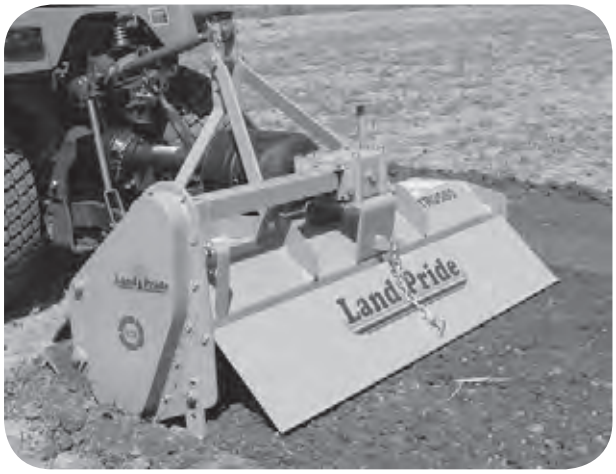

Made in USA
Hitch: Cat. 0 & 1
Flat Bar A-Frame
Gearbox: 540 rpm
- Bevel Gears
- Aluminum Alloy Housing
- Roller Bearings
- Drain Plug
- ASAE $1^3/_8$" - 6 Spline Shaft

Rotor Diameter: 13"
Rotor Speed: 230 RPM
Box Frame
Off-Center Shear-Pin or Slip-Clutch Driveline
Alloy Steel Heat Treated Blades
Four "C" Tines per Flange
Adjustable Skid Shoes
Adjustable Storage Stand
Adjustable Rear Deflector
#80 High Tensile Roller Chain - Fully Enclosed in Oil Bath with Drain Plug
Machined Cast Iron Bearing Mounts
Fits Land Pride Quick-Hitch

MODEL NUMBER	DESCRIPTION	APPROX. MACHINE WEIGHT	SHIPPING WEIGHT	LIST PRICE
RTR0542-31	05 SERIES ROTARY TILLER - 42" Width - Shearpin Driveline	268#	328#	$ 2,099
RTR0550-31	05 SERIES ROTARY TILLER - 50" Width - Shearpin Driveline	288#	348#	$ 2,214
RTR0542-32	05 SERIES ROTARY TILLER - 42" Width - Slip-Clutch Driveline	268#	328#	$ 2,271
RTR0550-32	05 SERIES ROTARY TILLER - 50" Width - Slip-Clutch Driveline	298#	358#	$ 2,386

ADDITIONAL SAVINGS
____TILLER 5-PAK STOCKING PROGRAM____

When any combination of Five of 05, 10, 15 or 20 Series Tillers are ordered at one time - DEDUCT $83 on each Tiller
Add option No. -99 to Model Number & Deduct **$ (83)**

ADD OPTION NO.	COLOR OPTIONS
-81	Green - 5 Pak only
-82	Orange - 5 Pak and Single units available
-83	Red - 5 Pak only

Rotary Tillers

RTR12 Series Reverse -Till
RTA12 Series Forward-Till

42" & 50": 15-35 HP
58" & 60": 20-40 HP
74": 25-50 HP

Made in USA
Forward or Reverse Rotation Rotor
Hitch: Cat. 1
Plate Steel A-Frame
Front Rubber Deflector to Keep Material In
Adjustable Lower Hitch Clevises with Plated Pins

Gearbox: 540 rpm
Bevel Gears
Cast Iron Housing
Tapered Roller Bearings
Drain Plug
ASAE 13/8" - 6 Spline Shaft
Rotor Diameter: 15"
Rotor Speed: 211 RPM
Box Frame
Slip-Clutch Driveline
Alloy Steel Heat Treated Blades
Four "C" Blades per Flange
Offset Capabilities
Adjustable Skid Shoes
Adjustable Storage Stand
Adjustable Rear Deflector
#80 High Tensile Roller Chain - Fully Enclosed in Oil Bath with Drain Plug
Machined Cast Iron Bearing Mounts
Fits Land Pride Quick-Hitch
(Cannot Offset with Quick-Hitch)

MODEL NUMBER	DESCRIPTION	APPROX. MACHINE WEIGHT	SHIPPING WEIGHT	LIST PRICE
RTR1242-32	12 SERIES REVERSE-TILL ROTARY TILLER - 42" Width - Slip-Clutch Driveline	405#	454#	$ 2,161
RTR1250-32	12 SERIES REVERSE-TILL ROTARY TILLER - 50" Width - Slip-Clutch Driveline	434#	486#	$ 2,275
RTR1258-32	12 SERIES REVERSE-TILL ROTARY TILLER - 58" Width - Slip-Clutch Driveline	478#	530#	$ 2,386
RTR1266-32	12 SERIES REVERSE-TILL ROTARY TILLER - 66" Width - Slip-Clutch Driveline	497#	563#	$ 2,747
RTR1274-32	12 SERIES REVERSE-TILL ROTARY TILLER - 74" Width - Slip-Clutch Driveline	529#	595#	$ 2,857
RTA1242-32	12 SERIES ROTARY TILLER - 42" Width - Slip-Clutch Driveline	362#	428#	$ 1,907
RTA1250-32	12 SERIES ROTARY TILLER - 50" Width - Slip-Clutch Driveline	389#	455#	$ 2,021
RTA1258-32	12 SERIES ROTARY TILLER - 58" Width - Slip-Clutch Driveline	419#	485#	$ 2,200
RTA1266-32	12 SERIES ROTARY TILLER - 66" Width - Slip-Clutch Driveline	448#	514#	$ 2,690
RTA1274-32	12 SERIES ROTARY TILLER - 74" Width - Slip-Clutch Driveline	480#	546#	$ 2,796

ADDITIONAL SAVINGS
____TILLER 5-PAK STOCKING PROGRAM____

When any combination of Five of 05, 12, 15 or 20 Series Tillers are ordered at one time - DEDUCT $83 on each Tiller
Add option No. -99 to Model Number & Deduct **$ (83)**

ADD OPTION NO.	COLOR OPTIONS
-81	Green - 5 Pak only
-82	Orange - 5 Pak and Single units available
-83	Red - 5 Pak only

Rotary Tillers

RTA15 Series Forward -Till

58: 17-35 HP
66: 20-40 HP
74: 25-50 HP

Made in USA
Hitch: Cat. 1
Formed Plate A-Frame
Adjustable Lower Hitch Clevises with Plated Pins
Gearbox: 540 rpm
  Bevel Gears
  Cast Iron Housing
  Drain Plug
Rotor Diameter: 15"
Rotor Speed: 211 RPM
Box Frame
Off-Center Shear-Pin or Slip-Clutch Driveline
Alloy Steel Heat Treated Blades
Four "C" Blades per Flange
Side Shift
Adjustable Skid Shoes
Adjustable Storage Stand
Adjustable Profile Stamped Rear Deflector
#80 High Tensile Roller Chain - Fully Enclosed in
  Oil Bath with Drain Plug
Machined Cast Iron Bearing Mounts
Fits Land Pride Quick-Hitch

SIDESHIFT DIMENSIONS

Position Behind Tractor (first figure left of center, second figure right of center)

MODEL	STANDARD	MAX. RIGHT	MAX. LEFT
RTA1558	29-29	12-46*	35-23*
RTA1566		12-54	39-27
RTA1574		12-62	49-31

*PTO Slightly Angled
**PTO Slightly Angled & Lower Hitch Clevises Narrowed

MODEL NUMBER	DESCRIPTION	APPROX. MACHINE WEIGHT	SHIPPING WEIGHT	LIST PRICE
RTA1558-31	**15 SERIES ROTARY TILLER** - 58" Width - Shearpin Driveline	444#	515#	$ 2,827
RTA1566-31	**15 SERIES ROTARY TILLER** - 66″ Width - Shearpin Driveline	459#	530#	$ 3,000
RTA1574-31	**15 SERIES ROTARY TILLER** - 74″ Width - Shearpin Driveline	471#	542#	$ 3,109
RTA1558-32	**15 SERIES ROTARY TILLER** - 58" Width - Slip-Clutch Driveline	458#	529#	$ 2,998
RTA1566-32	**15 SERIES ROTARY TILLER** - 66″ Width - Slip-Clutch Driveline	473#	544#	$ 3,171
RTA1574-32	**15 SERIES ROTARY TILLER** - 74″ Width - Slip-Clutch Driveline	485#	556#	$ 3,280

ADDITIONAL SAVINGS
____TILLER 5-PAK STOCKING PROGRAM____

When any combination of Five of 05, 12, 15 or 20 Series Tillers are ordered at one time - DEDUCT $83 on each Tiller
Add option No. -99 to Model Number & Deduct **$ (83)**

ADD

OPTION NO.	COLOR OPTIONS
-81	Green - 5 Pak only
-82	Orange - 5 Pak and Single units available
-83	Red - 5 Pak only

Rotary Tillers

RTR15 Series Reverse-Till

50 & 58: 17-35 HP
66: 20-40 HP
74: 25-50 HP

Made in USA
Reverse Rotation Rotor
Hitch: Cat. 1
Plate Steel A-Frame
Front Rubber Deflector to Keep Material In

Adjustable Lower Hitch Clevises with Plated Pins
Gearbox: 540 rpm
- Bevel Gears
- Cast Iron Housing
- Drain Plug

Rotor Diameter: 15"
Rotor Speed: 211 RPM
Box Frame
Off-Center Shear-Pin or Slip-Clutch Driveline
Alloy Steel Heat Treated Blades
Four "C" Blades per Flange
Side Shift
Adjustable Skid Shoes
Adjustable Storage Stand
Adjustable Rear Deflector
#80 High Tensile Roller Chain - Fully Enclosed in Oil Bath with Drain Plug
Machined Cast Iron Bearing Mounts
Fits Land Pride Quick-Hitch

SIDESHIFT DIMENSIONS

Position Behind Tractor (first figure left of center, second figure right of center)

MODEL	STANDARD	MAX. RIGHT	MAX. LEFT
RTR1550	25-25	12-38	31-19*
RTR1558	29-29	12-46*	35-23*
RTR1566		12-54	39-27
RTR1574		12-62	49-31

*PTO Slightly Angled
**PTO Slightly Angled & Lower Hitch Clevises Narrowed

MODEL NUMBER	DESCRIPTION	APPROX. MACHINE WEIGHT	SHIPPING WEIGHT	LIST PRICE
RTR1550-31	**15 SERIES REVERSE-TILL ROTARY TILLER** - 50" Width - Shearpin Driveline	471#	542#	$ 2,884
RTR1558-31	**15 SERIES REVERSE-TILL ROTARY TILLER** - 58" Width - Shearpin Driveline	486#	557#	$ 3,001
RTR1566-31	**15 SERIES REVERSE-TILL ROTARY TILLER** - 66″ Width - Shearpin Driveline	501#	572#	$ 3,054
RTR1574-31	**15 SERIES REVERSE-TILL ROTARY TILLER** - 74″ Width - Shearpin Driveline	513#	584#	$ 3,164
RTR1550-32	**15 SERIES REVERSE-TILL ROTARY TILLER** - 50" Width - Slip-Clutch Driveline	485#	556#	$ 3,055
RTR1558-32	**15 SERIES REVERSE-TILL ROTARY TILLER** - 58" Width - Slip-Clutch Driveline	503#	574#	$ 3,172
RTR1566-32	**15 SERIES REVERSE-TILL ROTARY TILLER** - 66″ Width - Slip-Clutch Driveline	515#	586#	$ 3,225
RTR1574-32	**15 SERIES REVERSE-TILL ROTARY TILLER** - 74″ Width - Slip-Clutch Driveline	527#	598#	$ 3,335

ADDITIONAL SAVINGS
____TILLER 5-PAK STOCKING PROGRAM____

When any combination of Five of 05, 12, 15 or 20 Series Tillers are ordered at one time - DEDUCT $83 on each Tiller
Add option No. -99 to Model Number & Deduct $ (83)

ADD

OPTION NO.	COLOR OPTIONS
-81	Green - 5 Pak only
-82	Orange - 5 Pak and Single units available
-83	Red - 5 Pak only

Rotary Tillers

RTR20 Series Reverse-Till
RTA20 Series Forward-Till

23-50 HP

Made in USA
Hitch: Cat. 1
Formed Plate A-Frame
Adjustable Lower Hitch Clevises with Plated Pins
Gearbox: 540 rpm
  Bevel Gears
  Cast Iron Housing
  Drain Plug
Rotor Diameter: 17"
Box Frame
Off-Center Shear-Pin or Slip-Clutch Driveline
Alloy Steel Heat Treated Blades
"C" Shaped Blades
18" Sideshift
Offset: 64: 14"; 72: 18"
Adjustable Skid Shoes
Storage Stand
Adjustable Rear Deflector
#80 High Tensile Roller Chain - Fully Enclosed in Oil Bath with Drain Plug
Machined Cast Iron Bearing Mounts
**Fits Land Pride Quick-Hitch (Limited Sideshift w/QH)
** May require longer driveline. Part No. 826-147C Available through our Parts Dept.

MODEL NUMBER	DESCRIPTION	APPROX. MACHINE WEIGHT	SHIPPING WEIGHT	LIST PRICE
	FORWARD ROTATION			
RTA2064-0631	**20 SERIES ROTARY TILLER - 64" Width** 6 Blades per Flange - Shearpin Driveline	689#	785#	$ 3,969
RTA2072-0631	**20 SERIES ROTARY TILLER - 72" Width** 6 Blades per Flange - Shearpin Driveline	734#	832#	$ 4,116
	REVERSE ROTATION			
RTR2064-0631	**20 SERIES ROTARY REVERSE-TILL TILLER - 64" Width** 6 Blades per Flange - Shearpin Driveline	748#	844#	$ 4,408
RTR2072-0631	**20 SERIES REVERSE-TILL ROTARY TILLER - 72" Width** 6 Blades per Flange - Shearpin Driveline	795#	893#	$ 4,552
	For slip-clutch driveline on RTA20 or RTR20 DELETE -31 from Model Number and ADD -32			$ 208

ADDITIONAL SAVINGS
____TILLER 5-PAK STOCKING PROGRAM____

When any combination of Five of 05, 12, 15 or 20 Series Tillers are ordered at one time - DEDUCT $83 on each Tiller
Add option No. -99 to Model Number & Deduct $ (83)

ADD OPTION NO.	COLOR OPTIONS
-81	Green - 5 Pak only
-82	Orange - 5 Pak and Single units available
-83	Red - 5 Pak only

Rotary Tillers

RTA25 Series Forward-Till

25-55 HP

Made in USA
Hitch: Cat. 1
Adjustable Hitch Clevises with Plated Pins
Formed Plate A-Frame
Gearbox: 540 rpm
  Bevel Gears
  Cast Iron Housing
  Drain Plug
Rotor Diameter: 17"
Rotor Speed: 220 rpm
 Slip-Clutch Driveline
High Carbon Heat Treated "C" Shaped Blades
Offset Capabilities
Adjustable Skid Shoes
Storage Stand
Rear Deflector: Spring Loaded, Adjustable,
  #100 High Tensile Roller Chain
  Fully Enclosed in Oil Bath with Drain Plug,
  Fill Plug & Skid Protection
**Fits Land Pride Quick-Hitch
  (Cannot Offset with Quick-Hitch)
** May require longer driveline. Part No. 826-147C Available through our Parts Dept.

MODEL NUMBER	DESCRIPTION	APPROX. MACHINE WEIGHT	SHIPPING WEIGHT	LIST PRICE
RTA2562-06	**25 SERIES ROTARY TILLERS - 62" Width**	649#	711#	$ 4,517
	6 Blades per Flange, Slip-Clutch Driveline			
RTA2570-06	**25 SERIES ROTARY TILLERS - 70" Width**	663#	725#	$ 4,663
	6 Blades per Flange, Slip-Clutch Driveline			
311-162A	Rear Deflector Down Spring Pressure Kit			$ 26
	(Available Through Parts Dept. Only)			

ADD OPTION NO.	COLOR OPTION
-82	Orange

Rotary Tillers

RTR25 Series Reverse-Till

25-55 HP

Made in USA
Hitch: Cat. 1
Adjustable Lower Hitch Clevises
Formed Plate A-Frame
Offset Capabilities
Gearbox: 540 rpm
  Bevel Gears
  Cast Iron Housing
  Drain Plug
Rotor Diameter: 17"
Rotor Speed: 220 RPM
Box Frame
Extra Stone Clearance
Slip-Clutch Driveline
High Carbon Heat Treated Blades
Six "C" Blades per Flange
Adjustable Skid Shoes
Storage Stand
Front Protector Plate with Reinforced Rubber Insert
Rear Deflector: Spring Loaded
  Extended Side Plates
Extended Torque Tube
#100 Roller Chain -
  Fully Enclosed in Oil Bath with Drain Plug,
  Fill Plug & Skid Protection
Coil Spring 'Sifting' Tines
**Fits Land Pride Quick-Hitch
  (Cannot Offset with Quick-Hitch)
** May require longer driveline. Part No. 826-147C
  Available through our Parts Dept.

MODEL NUMBER	DESCRIPTION	APPROX. MACHINE WEIGHT	SHIPPING WEIGHT	LIST PRICE
RTR2570	**25 SERIES REVERSE-TILL ROTARY TILLER** 70" Width - 6 Blades, Slip Clutch	868#	947#	$ 5,562
311-162A	Rear Deflector Down Spring Pressure Kit (Available through Parts Dept. Only)			$ 26

ADD OPTION NO.	COLOR OPTION
-82	Orange

Rotary Tillers

RTA35 Series Forward-Till

35-75 HP

Made in USA
Hitch: Cat. 1 & 2
Adjustable Lower Hitch Clevises
Formed Plate A-Frame
Gearbox: 540 rpm
  Bevel Gears
  Cast Iron Housing
  Drain Plug
Rotor Diameter: 19"
Rotor Speed: 204 RPM
Box Frame
Heavy Duty Slip-Clutch Driveline
High Carbon Heat Treated Blades
Six "C" Blades per Flange
Offset Capabilities
Adjustable Skid Shoes
Storage Stand
Rear Deflector: Spring Loaded, Adjustable,
  #100 High Tensile Roller Chain - Fully Enclosed in
  Oil Bath with Drain Plug & Fill Plug
**Fits Land Pride Quick-Hitch
  (Cannot Offset with Quick-Hitch)
** May require longer driveline. Part No. 826-080C Available
  through our Parts Dept.

MODEL NUMBER	DESCRIPTION	APPROX. MACHINE WEIGHT	SHIPPING WEIGHT	LIST PRICE
RTA3576	**35 SERIES ROTARY TILLER - 76" Width**	856#	920#	$ 5,624
311-162A	Rear Deflector Down Spring Pressure Kit (Available Through Parts Dept. Only)			$ 26

ADD OPTION NO.	COLOR OPTION
-82	Orange

RETURN TO INDEX

All Purpose Seeders

APS15 Series

CAT. 1 - 4', 5', 6'
CAT 1 & 2 - 7'

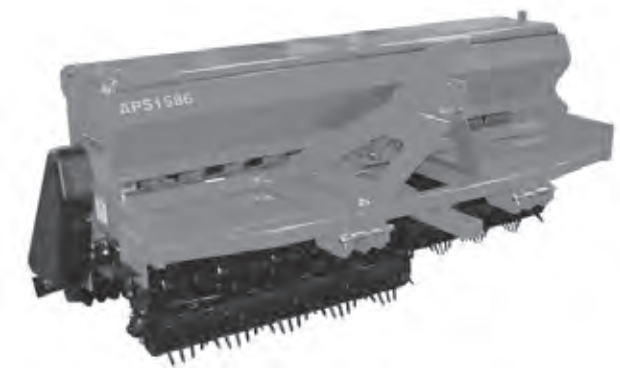

Formed Plate A-Frame
Heavy Duty Lid with Seed Splash Guard
Ground Drive Metering
Seed Shut-off Pin
One BU/FT Water Tight Seed Box with Agitator
Seed Cups: Fluted for Accurate Metering
48": 7, 60": 8, 72": 10, 86": 12
Wide Range of Calibration Settings per Acre & per 1000 Square Feet
Wind Guarded Seed Drop
#40 Chain - Spring Loaded, Easy Access
2 Front Rollers: 8" Diameter
Roller Spikes: 1½" x ½"
Front Roller Angling: up to 20 degrees
Rear Roller, Straight: 8" Diameter with spikes, or Cast Notched Packer Rings
Lift Hooks
Optional Rear Roller Mudscrapers & Small Seeds Box
Fits Land Pride Quick-Hitch

MODEL NUMBER	DESCRIPTION	APPROX. MACHINE WEIGHT	SHIPPING WEIGHT	LIST PRICE
APS1548-01	**15 SERIES ALL PURPOSE SEEDER -** 48" Width	547#	872#	$ 3,849
	YOU MUST CHOOSE A REAR SEED PACKING OPTION			
-11	Spike Roller	153#	153#	$ 900
-12	Cast Iron Notched Roller	305#	305#	$ 950
	YOU MAY CHOOSE A FRONT & REAR ROLLER MUD SCRAPER			
-21	Mud Scraper for Front and Rear Spiked Roller	65#	65#	$ 347
-22	Mud Scraper for Front Spiked Roller and Rear Notched Roller (Scrapers for SN 567003 and above)	48#	48#	$ 347
	YOU MAY CHOOSE A SMALL SEEDS BOX			
-91	Small Seeds Box (.95 bushel capacity) (P/N 313-465A)	78#	93#	$ 1,664
APS1560-01	**15 SERIES ALL PURPOSE SEEDER -** 60" Width	702#	1,042#	$ 4,558
	YOU MUST CHOOSE A REAR SEED PACKING OPTION			
-11	Spike Roller	182#	182#	$ 1,003
-12	Cast Iron Notched Roller	363#	363#	$ 1,058
	YOU MAY CHOOSE A FRONT & REAR ROLLER MUD SCRAPER			
-21	Mud Scraper for Front and Rear Spiked Roller	76#	76#	$ 361
-22	Mud Scraper for Front Spiked Roller and Rear Notched Roller	57#	57#	$ 361
	YOU MAY CHOOSE A SMALL SEEDS BOX			
-91	Small Seeds Box (1.08 bushel capacity) (P/N 313-466A)	81#	96#	$ 1,737
APS1572-01	**15 SERIES ALL PURPOSE SEEDER -** 72" Width	836#	1,304#	$ 5,267
	YOU MUST CHOOSE A REAR SEED PACKING OPTION			
-11	Spike Roller	210#	210#	$ 1,106
-12	Cast Iron Notched Roller	421#	421#	$ 1,168
	YOU MAY CHOOSE A FRONT & REAR ROLLER MUD SCRAPER			
-21	Mud Scraper for Front and Rear Spiked Roller	87#	87#	$ 373
-22	Mud Scraper for Front Spiked Roller and Rear Notched Roller (Scrapers for SN 547969 and above)	65#	65#	$ 373
	YOU MAY CHOOSE A SMALL SEEDS BOX			
-91	Small Seeds Box (1.31 bushel capacity) (P/N 313-467A)	84#	99#	$ 1,810
APS1586-01	**15 SERIES ALL PURPOSE SEEDER -** 86" Width	1,070#	1,455#	$ 6,128
	YOU MUST CHOOSE A REAR SEED PACKING OPTION			
-11	Spike Roller	250#	250#	$ 1,208
-12	Cast Iron Notched Roller	490#	490#	$ 1,274
	YOU MAY CHOOSE A FRONT & REAR ROLLER MUD SCRAPER			
-21	Mud Scraper for Front and Rear Spiked Roller	91#	91#	$ 386
-22	Mud Scraper for Front Spiked Roller and Rear Notched Roller	101#	101#	$ 386
	YOU MAY CHOOSE A SMALL SEEDS BOX			
-91	Small Seeds Box (1.54 bushel capacity) (P/N 313-468A)	88#	103#	$ 1,904

ADD OPTION NO.	COLOR OPTION
-82	Orange

Small Seeds Box is a Dealer Installed Option - Approx. 2 Hours

RETURN TO INDEX

Fertilizer Spreaders

FSP Series

Cat. 1

Hitch: Category 1 (Not QH Adaptable)
540 rpm
Spin-Type Broadcast
Three Hopper Sizes
Hopper: One Piece, Seamless Polyethylene
Heavy-Duty Tubular Frame
Shielded Driveline
Plated Vanes
Loading Height:
- FSP500: 3'
- FSP700: 3'4"
- FSP1000: 3'9"

Spreading Width: Up to Approx. 54 Ft.
Spreading Capacity: 44-890 lbs/Acre
Gearbox: 1:1 Ratio, $1^3/_8$" Shaft
Three Pattern Settings
Plastic Agitator Wheel, Steel Arm
Stainless Steel Orifice Doors
Plated Adjustment Levers

NUMBER	DESCRIPTION	APPROX. MACHINE WEIGHT	SHIPPING WEIGHT	LIST PRICE
Price for 1 Spreader				
FSP500-81	**FERTILIZER SPREADER** 350 lb / 5.85 cu. ft. capacity	119#	119#	$ 742
FSP700-81	**FERTILIZER SPREADER** 563 lb / 9.38 cu. ft. capacity	128#	128#	$ 777
FSP1000-81	**FERTILIZER SPREADER** 673 lb / 11.22 cu. ft. capacity	139#	139#	$ 816
Price for 2 to 5 Spreaders - Any Combination				
FSP500-82	**FERTILIZER SPREADER** 350 lb / 5.85 cu. ft. capacity	119#	119#	$ 712
FSP700-82	**FERTILIZER SPREADER** 563 lb / 9.38 cu. ft. capacity	128#	128#	$ 747
FSP1000-82	**FERTILIZER SPREADER** 673 lb / 11.22 cu. ft. capacity	139#	139#	$ 786
Price for 6 or More Spreaders - Any combination				
FSP500	**FERTILIZER SPREADER** 350 lb / 5.85 cu. ft. capacity	119#	119#	$ 681
FSP700	**FERTILIZER SPREADER** 563 lb / 9.38 cu. ft. capacity	128#	128#	$ 716
FSP1000	**FERTILIZER SPREADER** 673 lb / 11.22 cu. ft. capacity	139#	139#	$ 755
	Available through the Parts Dept.			
	Hopper Cover			
891-145C	FSP500 Cover			68
891-146C	FSP700 & FSP1000 Hopper Cover			85

RETURN TO INDEX

Pendulum Spreaders

PFS Series

Hitch: PFS4000: Cat. 1
PFS5060: Cat. 1 & 2
PFS8010: Cat. 2
Delivery: Pendulum Type
Manual Opening System
540 rpm
Six Hopper Configurations
Hopper: One Piece, Seamless Fiberglass
(PFS4000 is cone shape polyethylene)
Heavy-Duty Tubular Frame
Shielded Driveline
Spreading Width w/Standard Plastic Spout: 20′ to 46′
Spreading Capacity: 44-890 lbs/Acre
Gearbox: $1^3/_8$" Shaft
Plated Adjustment Levers

NUMBER	DESCRIPTION		APPROX. MACHINE WEIGHT	SHIPPING WEIGHT	LIST PRICE
PFS4000	**PENDULUM SPREADER** 925 lb capacity		221#	246#	$ 2,194
PFS5060	**PENDULUM SPREADER** 1150 lb capacity		287#	312#	$ 2,963
ADD OPTION NO.	**(PFS5060 only)**				
-01	Top Extension - increases PFS5060 capacity to 1,393 lbs.	(309-127A)	25#	25#	$ 499
-10	Hydraulic Opening System	(309-126A)	15#	15#	$ 417
-20	Agitator	(309-134A)	10#	10#	$ 134
PFS8010	**PENDULUM SPREADER** 2040 lb capacity		375#	400#	$ 3,730
ADD OPTION NO.	**(PFS8010 only)**				
-01	Top Extension - increases PFS8010 capacity to 2,522 lbs.	(309-128A)	30#	30#	$ 541
-02	Top Extension - increases PFS8010 capacity to 2,998 lbs.	(309-129A)	40#	40#	$ 581
-10	Hydraulic Opening System	(309-130A)	15#	15#	$ 437
-20	Agitator	(309-134A)	10#	10#	$ 134
	Additional Spouts Available through the Parts Department (for all models)				
309-131A	Stainless Steel Short Spout for Narrow Spreading; 2’4” to 14’8”				$ 806
309-132A	Stainless Steel Spout for Vineyards; 6’6” to 13’1”				$ 733
309-133A	Stainless Steel Spout for Vineyards/Orchards: 6’6” to 32’9”				$ 671
309-136A	Small Seeds Plate Limiter (closes off parts of seed openings to control the flow of small seeds)				$ 101

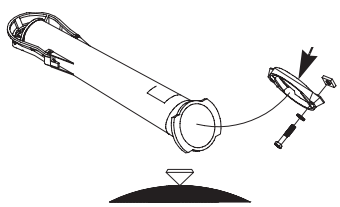

STANDARD

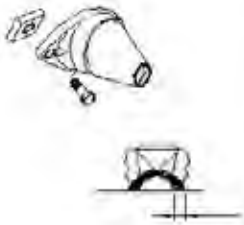

309-131A

309-132A

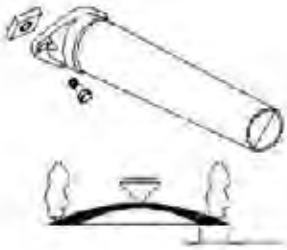

309-133A

Pull-Type Spreaders

PTS Series

Pull-Type

Hitch: Pull-Type, 2” Ball Hitch
Ground Driven
Spin-Type Broadcast
Two Hopper Sizes
Hopper: One Piece, Seamless Polyethylene
Heavy-Duty Tubular Frame
Plated Vanes and Spinner
Plated Adjustment Levers
Loading Height: 54" Average
Max. Spreading Width: 39-46 Ft. (Based on 8 mph)
Spreading Capacity: 44-890 lbs
Three Pattern Settings
Overall Width: 41”
Wheel Size: 16x6.5-8
Acres Covered Per Hour: 7-15
(depending on slide opening)

NUMBER	DESCRIPTION	APPROX. MACHINE WEIGHT	SHIPPING WEIGHT	LIST PRICE
PTS500	**FERTILIZER SPREADER** 350 lb / 5.85 cu. ft. capacity	154#	174#	$ 1,152
PTS700	**FERTILIZER SPREADER** 563 lb / 9.38 cu. ft. capacity	161#	181#	$ 1,207
	Available through the Parts Dept.			
891-145C	PTS500 Hopper Cover			$ 68
891-146C	PTS700 Hopper Cover			$ 85

Overseeders

OS15 Series - 48" Width

25-60 HP

Made in USA
Hitch: Cat. 1
Formed Plate A-Frame
Knives: High Carbon, Heat Treated, 5 per Flange
Standard: $^{3}/_{16}$"
Curved: $^{5}/_{32}$"
Knife Tip Speed: 2000 fpm
Rotor Diameter: 18"
Rotor Speed: 400 rpm
Tires: Two 8.5" x 18" with Tubes on Wheel Drive
One BU/FT Water Tight Seed Box with Agitator
Wide Range of Calibration Settings per Acre and per 1000 Square Feet
Seed Cups: 7, Powder Metal Flutes for Accurate Metering
Lift Hooks
Heavy Duty Slip-Clutch Driveline
Profile Stamped Chain Box, Drain Plug, Vent Plug
#80 Roller Chain: Adjustable, Fully Enclosed in Oil Bath
Seed Rollers: 22 Cast Notched Rollers with Profile Stamped Scraper
Wind Guarded Splash Plate
Fits Land Pride Quick-Hitch

MODEL NUMBER	DESCRIPTION	APPROX. MACHINE WEIGHT	SHIPPING WEIGHT	LIST PRICE
OS1548-043551	**15 SERIES OVERSEEDER -** 48" Width, 2" Spacing Curved Blades, Cast Rollers, Gauge Wheel Seed Box Drive	1290#	1460#	$ 9,571
OS1548-043553	**15 SERIES OVERSEEDER** - 48" Width, 2" Spacing Curved Blades, Cast Rollers, Roller Seed Box Drive	1250#	1420#	$ 9,183
OS1548-023553	**15 SERIES OVERSEEDER** - 48" Width, 3" Spacing Standard Blades, Cast Rollers, Roller Seed Box Drive	1220#	1390#	$ 8,861
ADD OPTION NO.	**EXTRA SEED BOX** For Simultaneous Seeding (Dealer Installed) (.95 Bushel capacity)			
-91	Extra Seed Box with Gauge Wheel Drive (308-361A)		35#	$ 1,689
-92	Extra Seed Box with Rear Roller Drive (308-362A)		35#	$ 1,765
	SPRING TINE HARROW Attaches behind the seed drop to help move the seed to the soil			
-21	Spring Tine Harrow (308-316A) (Will not work in conjunction with slit-seeder)		40#	$ 575
	SLIT SEEDING ATTACHMENT For seeding directly into slits			
308-160A	2" Slit-Seeding Attachment		38#	$ 853
308-163A	3" Slit-Seeding Attachment		36#	$ 853
	FRONT ROLLER (Recommended with Roller Seed Box Drive) Full width, Anti-scalping, Depth control, Floating top link			
308-258A	Front Roller - 48"		173#	$ 879

ADD OPTION NO.	COLOR OPTION
-82	Orange

Overseeders

OS15 Series - 72" Width

30-60 HP

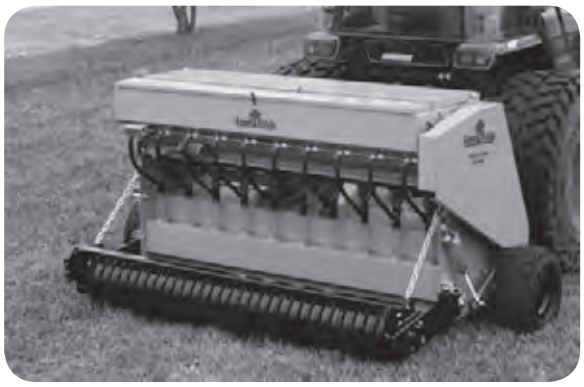

Made in USA
Hitch: Cat. 1
Formed Plate A-Frame
Knives: High Carbon, Heat Treated, 5 per Flange
Standard: 3/16"
Curved: 5/32"
Knife Tip Speed: 2000 fpm
Rotor Diameter: 18"
Rotor Speed: 400 rpm
Tires: Two 8.5" x 18" with Tubes on Wheel Drive
One BU/FT Water Tight Seed Box with Agitator
Wide Range of Calibration Settings per Acre and per 1000 Square Feet
Seed Cups: 10, Powder Metal Flutes for Accurate Metering
Lift Hooks
Heavy Duty Slip-Clutch Driveline
Profile Stamped Chain Box, Drain Plug, Vent Plug
#100 Roller Chain: Adjustable, Fully Enclosed in Oil Bath
Seed Rollers: 31 Cast Notched Rollers with Profile Stamped Scraper
Wind Guarded Splash Plate
Fits Land Pride Quick-Hitch

MODEL NUMBER	DESCRIPTION	APPROX. MACHINE WEIGHT	SHIPPING WEIGHT	LIST PRICE
OS1572-043551	**15 SERIES OVERSEEDER** - 72" Width, 2" Spacing Curved Blades, Cast Rollers, Gauge Wheel Seed Box Drive	1645#	1815#	$ 12,465
OS1572-043553	**15 SERIES OVERSEEDER** - 72" Width, 2" Spacing Curved Blades, Cast Rollers, Roller Seed Box Drive	1605#	1775#	$ 12,077
OS1572-023553	**15 SERIES OVERSEEDER** - 72" Width, 3" Spacing Standard Blades, Cast Rollers, Roller Seed Box Drive	1565#	1735#	$ 11,653
ADD OPTION NO.	**EXTRA SEED BOX For simultaneous seeding (Dealer Installed)** **Approx. One Bushel Capacity (1.36 Bushel)**			
-91	Extra Seed Box with Gauge Wheel Drive (308-363A)		45#	$ 1,832
-92	Extra Seed Box with Rear Roller Drive (308-364A)		45#	$ 1,917
	SPRING TINE HARROW Attaches behind the seed drop to help move the seed to the soil			
-21	Spring Tine Harrow (308-317A) (Will not work in conjunction with slit-seeder)		55#	$ 431
	SLIT SEEDING ATTACHMENT For seeding directly into slits			
308-152A	2" Slit-Seeding Attachment		56#	$ 1,039
308-155A	3" Slit-Seeding Attachment		55#	$ 1,039
	FRONT ROLLER (Recommended with Roller Seed Box Drive) **Full Width, Anti-Scalping, Depth Control, Floating Top Link**			
308-259A	Front Roller - 72"		205#	$ 1,019
ADD OPTION NO.	**COLOR OPTION**			
-82	Orange			

RETURN TO INDEX

Food Plot Seeder

FPS48 Series

Pull-Type

Hitch Type: Pull type with combination 2” ball hitch and clevis hitch
Disc Cutting Width: 40"- 50”
Minimum ATV Size: 350 cc
Minimum Tractor / Vehicle Size: 17 hp
Height: 52”
Length: 104”
Width: 54”

Weight Load on Each Disc: 46 lbs
Number of Disc Blades: 8
Disc Blade Size & Type: 16” Notched
Blade Spacing: 7 1/2”
Transport / Gauging Tires: 13” Diameter 4 Ply Tubeless
Bearing Hanger: 3/8” Plate
Bearing Type, 2 per Gang: Self Aligning, Sealed Bearing
Gang Tube: 3” x 2”
Gang Axle: 1” Square High Carbon Steel
Disc Angle: Front Gang: 0, 7, 14 & 21 Degrees
Rear Gang: 0, 7, 14 & 21 Degrees
Frame Construction: 2” x 2” Square Tubular Design
Lifting Device: Electric Actuator, 12 Volt or Ratchet Jack
Rear Axle Pivot Type: Greasable
Rear Roller Bearing: Greasable
Packer Roller Width: 40 - 7/16”
Spreading Device: Spin Spreader, 12V, Electrically operated
Spreader Hopper Loading Height: 42” off Ground
Spreader Hopper Volume/Capacity: 2 cu. ft. (15 gallons) (100 lbs. Maximum capacity weight)
Spin Spreader
Deflector Small Seed
Restrictor

MODEL NUMBER	DESCRIPTION	APPROX. MACHINE WEIGHT	SHIPPING WEIGHT	LIST PRICE
FPS48-11	**48” FOOD PLOT SEEDER: PLOT RANGER** Spin Spreader & Rear Roller	510#	690#	$ 2,365
FPS48	**48” FOOD PLOT SEEDER: PLOT RANGER** Disc Only	370#	480#	$ 1,516
	YOU MUST CHOOSE ONE TRANSPORT LIFT PACKAGE			
-20	Ratchet Jack Lift		15#	$ 69
-21	Electric Actuator Lift		14#	$ 673
	YOU MAY CHOOSE A COLOR OPTION			
-82	Orange			
Available through the Parts Department				
322-129S	SPREADER ONLY with mounting bracket for use with a 2” Receiver		25#	$ 598

Primary Seeders

PS15 Series

CAT. 1

Made in USA
Hitch: Cat. 1
Seeding Width: 70 1/2"
Formed Plate A-Frame
Heavy Duty Lid with Seed Splash Guard
Ground Drive Metering
One BU/FT Water Tight Seed Box with Agitator
Seed Cups: 10 Fluted for Accurate Metering
Wide Range of Calibration Settings per Acre & per 1000 Square Feet
Wind Guarded Seed Drop
#40 Chain - Spring Loaded, Easy Access
Front Roller: 29 Rings - 12" Diameter Packer Wheels
Rear Roller: 30 Rings
9 1/2" Diameter, Spring Loaded with Flexing Ability
Roller Spindles:
1 1/2" Front, 1" Rear with Greasable Bearings
Spring-Tine Track Removers: Two Each
Lift Hooks
Fits Land Pride Quick-Hitch

MODEL NUMBER	DESCRIPTION	APPROX. MACHINE WEIGHT	SHIPPING WEIGHT	LIST PRICE
PS1572	**15 SERIES PRIMARY SEEDER** 72" Width with Dual Track Removers	1165#	1320#	$ 6,077

ADD OPTION NO.	COLOR OPTION
-82	Orange

Primary Seeders

PSN20 Series - 96" Width

CAT. 2 - CAT. 3

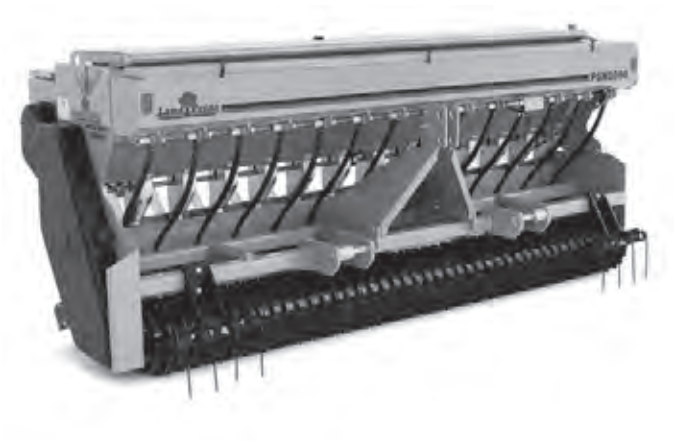

Hitch: Cat. 2 & 3, QH Adaptable
Seeding Width: 8'6"
Formed Plate A-Frame
Heavy-Duty Lid with Seed Splash Guard
Main Box Agitator
Ground Drive Metering
Wide Range of Calibration Settings
Wind Guarded Seed Drop
#40 Drive Chain-Spring Loaded
Front Roller: 42 Rings - 12" Diameter
Rear Roller: 43 Rings - 9 1/2" Diameter
Spring Loaded
Roller Spindles: 1 1/2" Front,
1" Rear with Greasable Bearings
Spring Tine Track Removers
Lift Hooks

MODEL NUMBER	DESCRIPTION	APPROX. MACHINE WEIGHT	SHIPPING WEIGHT	LIST PRICE
	NATIVE GRASS MAIN SEEDBOX			
PSN2096	**20 SERIES PRIMARY SEEDER** - 96" Width 8 Bushel Native Grass Seedbox Capacity	1810#	1910#	$ 11,699
ADD OPTION NO.	**Dealer Installed Boxes***			
-01	Small Seeds Box (313-304A) 2 Bushel Seedbox Capacity	120#	120#	$ 1,537
-11	Grass/Grain Seedbox (313-305A) 4.8 Bushel Seedbox Capacity	250#	250#	$ 2,126

*Allow two hours installation for each dealer installed box. All holes are pre-drilled.

Optional boxes can be added later. For small seeds box on seeders with serial number 397502 or prior, order from our Parts Department small seeds box part number 313-309A, same price as 313-304A.

PULL HITCH ASSEMBLY

Quick Attach Type Hook-up
2 ea. 9.5L x 15 12 Ply Tires
2 ea. 14" Cylinders with Hose
Wheel Base: 69" Center to Center
Length 95"
Tongue Jack

ADD OPTION NO.					
-41	Pull Hitch	(313-321A)	720#	720#	$ 3,487

Primary Seeders

PS25 Series - 10' Width

CAT. 2 Tractor

Hitch: Cat. 2
  Quick Hitch Suitable
  Pull-Type Suitable
Removable Tongue on Pull-Type
Safety Chain on Pull-Type
Machine Width:
13'6" End Wheel Model
  10'6" Front Wheel Model
Seeding Width: 10'
Machine Length: 3' on 3-Point
  12' on Pull-Type

Capacity: 30 Bushel Box
Two Position Broadcasting
  Standard & Brome
Water Tight Seedbox
High & Low Output Range Settings
Seed Level Indicator
Output Range: Varies by Seed Variety; Consult Manual
Seed Box Construction: 14 Gauge, All Welded
Front Rollers: Notched, 51 ea, $15^5/_8$", Cast Iron
Rear Rollers: Notched, 52 ea, $11^3/_8$", Cast Iron
Roller Spindles: $1^1/_2$" Front, $1^1/_4$" Rear with
  Greasable Bearings
Seed Cups: 16, Fluted for Accurate Metering
Vacuum Sealed Acremeter

PULL-TYPE HITCH INCLUDES:

Cylinder & Hoses for each Transport Wheel
Mechanical Transport Locks
Tires: 15" x 30" Implement Rib
Greasable Bearings on Transport Wheels
Hydraulic Accumulator for Weight Stabilization on
  Front Wheel Model

MODEL NUMBER	DESCRIPTION	APPROX. MACHINE WEIGHT	SHIPPING WEIGHT	LIST PRICE
PS25120-30	**25 SERIES PRIMARY SEEDER** 30 Bushel Box, 3-Point Hitch	2940#	3190#	$ 13,316
PS25120-30-41	**25 SERIES PRIMARY SEEDER** 30 Bushel Box, Pull-Type Hitch and Front Mounted Wheels	3340#	3590#	$ 16,455
PS25120-30-42	**25 SERIES PRIMARY SEEDER** 30 Bushel Box, Pull-Type Hitch and End Mounted Wheels	3415#	3675#	$ 16,455

RETURN TO INDEX

Angle Brooms

AB Series - Skid Steer Mounted

12-30 GPM

Hydraulic GPM Range: 12-30 GPM
Rated Flow Standard Motor: 25 GPM @ 230 RPM
Minimum Hydraulic Flow Req.: 12 GPM @2000 PSI
Hitch: Universal Quick Coupler Plate Mount
Sweeping Width: 84”
Sweeping Width @ 30 Degree Max. Angle: 76”
Overall Width: 93.5” Approx.
Overall Height: 33” approx.
Brush Diameter: 32”

Brush Rotor Shaft: Quick Change Broom Core with No Hydraulic Breakage in Changeover
Hex Drive System: Replaceable
Brush Bristle: 100% Poly or 100% Metallic or 50/50
Hood: Sheet Metal
Jack Stands: Standard
Angling: Manual Angling 30 Deg Left or Right or Hydraulic Angling
Float Control:
Spring Loaded w/Adjustable Down Pressure & Stops
Brush Speed Range: 100 - 230 RPM
Hydraulic Hoses
Hydraulic Couplers
Additional Accessories:
- Metal Shroud Extension
- Dust Suppression System
- Marker Indicators
- Rubber Dust Deflector

HIGH FLOW: Allows higher GPM units to be used by diverting excess GPM (above 25 GPM) back to the tank.

MODEL NUMBER	DESCRIPTION	APPROX. MACHINE WEIGHT	SHIPPING WEIGHT	LIST PRICE
AB84	**Angle Broom - 84” Sweeping Width** Universal Skid Steer Quick Coupler Mount	885#	1045#	$ 2,749
	YOU MUST CHOOSE ONE ANGLING FEATURE			
	FOR 12 - 24 GPM	15#		$ 1,148
-01	Standard Flow w/Hydraulic Angling			
-02	Standard Flow w/Manual Angling	10#		$ 427
	FOR 25 GPM AND ABOVE ONLY			
-03	High Flow w/Hydraulic Angling - Must use Option -22	15#		$ 1,411
-04	High Flow w/Manual Angling - Must use Option -22	10#		$ 692
	YOU MUST CHOOSE ONE BROOM ASSEMBLY			
-11	Poly Bristles	included		$ 1,207
-12	Wire Bristles	included		$ 1,207
-13	Poly/Wire Bristles	included		$ 1,207
	YOU MUST CHOOSE ONE HYDRAULIC DRIVE MOTOR			
-21	18 cu. in Hydraulic Motor - 18 GPM and below (For use with Option -01 or -02)	included		$ 938
-22	25 cu. in. Hydraulic Motor - 19 GPM and above (For use with Option -01, -02, -03 & -04)	included		$ 938
	YOU MAY CHOOSE ONE OF THE FOLLOWING FRONT DEFLECTORS			
-31	Metal Shroud Extension w/Rubber Dust Deflector	59#		$ 203
-32	Metal Shroud Extension Only	37#		$ 115
	YOU MAY CHOOSE ONE OF THE FOLLOWING OPTIONS			
-41	Marker Indicators (helps you locate front corners of unit)	3#		$ 43
-51	Dust Suppression System (uses water)			$ 434

RETURN TO INDEX

Bale Spears

BS10 & BSE10 Series

BSE10 Shown

Quick Attach Skid Plate or Euro Mount
Lift Capacity: 3,000 lbs at 24" from Face of Frame
Spear Length: 45" upper, 19" lower
Spear Construction: Forged

MODEL NUMBER	DESCRIPTION	APPROX. MACHINE WEIGHT	SHIPPING WEIGHT	LIST PRICE
BS10-91	10 SERIES BALE SPEAR - SINGLE	156#	166#	$ 496
BS10-93	10 SERIES BALE SPEAR - 3-PAK	156#	185#	$ 471
BSE10-91	10 SERIES BALE SPEAR - SINGLE	168#	178#	$ 556
BSE10-93	10 SERIES BALE SPEAR - 3-PAK	168#	199#	$ 531

3-PAKS are Same Model Units

Bale Spears

BS20 & BSE20 Series

BS20 Shown

Quick Attach Skid Plate or Euro Hitch
Lift Capacity: 3,000 lbs at 24" From Face of Frame
Spear Length: 45"
Spear Construction: Forged

MODEL NUMBER	DESCRIPTION	APPROX. MACHINE WEIGHT	SHIPPING WEIGHT	LIST PRICE
BS20-91	20 SERIES BALE SPEAR - SINGLE	196#	206#	$ 637
BS20-93	20 SERIES BALE SPEAR - 3-PAK	196#	225#	$ 612
BSE20-91	20 SERIES BALE SPEAR - SINGLE	208#	218#	$ 685
BSE20-93	20 SERIES BALE SPEAR - 3-PAK	208#	239#	$ 660

3-PAKS are Same Model Units

RETURN TO INDEX

Blades

RB05 Series

17-25 HP

Hitch: Cat. 0 with Cat. 1 Pins
Blade Angles:
5 Fwd Up to 30 Degrees; 5 Reverse Up to 30 Degrees
Offset: 10" Left or Right
Moldboard Height: 13 1/2"
Moldboard Thickness: 1/4"
Cutting Edge: 3/8" x 3" Heat Treated; Bolt-On
Parking Stand
Landscape Rake Adaptable

MODEL NUMBER	DESCRIPTION	APPROX. MACHINE WEIGHT	SHIPPING WEIGHT	LIST PRICE
RB0548	05 SERIES REAR BLADE - 48" Width	128#	164#	$ 461
RB0560	05 SERIES REAR BLADE - 60" Width	143#	179#	$ 484

ADD OPTION NO.	COLOR OPTION
-82	Orange

List Price is for Each:
RB05s Are Packaged 2 Units Per Crate.

Blades

RB15 Series

17-40 HP

Hitch: Cat. 1
Blade Angles:
7 Forward Up to 45 Degrees
5 Reverse Up to 30 Degrees
Offset: 12" Left or Right
Moldboard Height: 14"
Moldboard Thickness: 1/4"
Cutting Edge: 1/2" x 6" Heat Treated; Reversible & Replaceable
Landscape Rake Adaptable
Parking Stand
Fits Land Pride Quick-Hitch

MODEL NUMBER	DESCRIPTION	APPROX. MACHINE WEIGHT	SHIPPING WEIGHT	LIST PRICE
RB1560	15 SERIES REAR BLADE - 60" Width	248#	284#	$ 572
RB1572	15 SERIES REAR BLADE - 72" Width	269#	305#	$ 639
RB1584	15 SERIES REAR BLADE - 84" Width	289#	325#	$ 712

ADD OPTION NO.	COLOR OPTION
-82	Orange

List Price is for each:
RB15s Are Packaged 2 Units Per Crate.

Blades

RB16 Series

20-40 HP

Hitch: Cat. 1
Moldboard Height: 14"
Moldboard Thickness: 1/4"
Cutting Edge: 1/2" x 6" Heat Treated; Reversible & Replaceable
Fits Land Pride Quick-Hitch
Tilt: 5 Positions Up to 15 Degrees
Offset: Left 12", Right 12"
Angles: 7 Forward Up to 45 Degrees
3 Reverse Up to 30 Degrees
Parking Stand

MODEL NUMBER	DESCRIPTION	APPROX. MACHINE WEIGHT	SHIPPING WEIGHT	LIST PRICE
RB1660	**16 SERIES REAR BLADE - 60" Width** with 3-Way Position	283#	319#	$ 759
RB1672	**16 SERIES REAR BLADE - 72" Width** with 3-Way Position	297#	338#	$ 806
RB1684	**16 SERIES REAR BLADE - 84" Width** with 3-Way Position	319#	355#	$ 865

ADD OPTION NO.	COLOR OPTION
-81	Green
-82	Orange

List Price is for each:
RB16s Are Packaged 2 Units Per Crate.

See pg. 147 for Hydraulic Angling & Other Accessories

RETURN TO INDEX

Blades

RB26 Series

25-60 HP

Hitch: Cat. 1
Blade Angles:
7 Forward Up to 45 Degrees
3 Reverse Up to 30 Degrees
Moldboard Height: $17^1/_2$"
Moldboard Thickness: $^5/_{16}$"
Cutting Edge: $^1/_2$" x 6" Heat Treated;
Replaceable & Reversible
Tilt: 5 Positions up to 30 degrees
Offset: Left 12", Right 12"
Mechanical or Optional Hydraulics for Angling
Parking Stand
Fits Land Pride Quick-Hitch

MODEL NUMBER	DESCRIPTION	APPROX. MACHINE WEIGHT	SHIPPING WEIGHT	LIST PRICE
RB2672	**26 SERIES REAR BLADE - 72" Width** with 3-Way Position	369#	401#	$ 1,026
RB2684	**26 SERIES REAR BLADE - 84" Width** with 3-Way Position	396#	428#	$ 1,089
RB2696	**26 SERIES REAR BLADE - 96" Width** with 3-Way Position	425#	457#	$ 1,172

ADD OPTION NO.	COLOR OPTION
-81	Green
-82	Orange

See pg. 147 for Hydraulic Angling & Other Accessories

Blades

RB37 Series

35-80 HP

Hitch: Cat. 1 & 2 Combination
Blade Angles:
7 Forward Up to 45 Degrees
3 Reverse Up to 30 Degrees
Offset: 26" Left, 26" Right
Tilt: 7 Positions Up to 22.5 Degrees,
Left or Right, 45 Degrees Total
Moldboard Height: 17"
Moldboard Thickness: $^5/_{16}$"
Cutting Edge: $^1/_2$" x 6" Heat Treated;
Reversible & Replaceable
Parking Stand
Fits Land Pride Quick-Hitch

MODEL NUMBER	DESCRIPTION	APPROX. MACHINE WEIGHT	SHIPPING WEIGHT	LIST PRICE
RB3772	**37 SERIES REAR BLADE - 72" Width**	595#	632#	$ 1,457
RB3784	**37 SERIES REAR BLADE - 84" Width**	630#	667#	$ 1,578
RB3796	**37 SERIES REAR BLADE - 96" Width**	665#	702#	$ 1,633

ADD OPTION NO.	COLOR OPTION
-82	Orange
-81	Green

See pg. 147 for Other Accessories

Blade Accessories

PART NUMBER	DESCRIPTION	APPROX. MACHINE WEIGHT	SHIPPING WEIGHT	LIST PRICE
301-012A	Skid Shoes for RB(T)1560, RB(T)1584, RB25, RB35 - S/N 633207 & below, RB1572 S/N 58799 & below	24#	24#	$ 188
301-138A	Skid Shoes for RB(T)1572 - S/N 58800 to 633207	27#	27#	$ 188
301-330A	Skid Shoes for RB(T)15, RB16, RB25, RB26, RB35 - S/N 633208 & above	27#	27#	$ 188
301-333A	Skid Shoes for RB36 & RB37	42#	42#	$ 211
300-081A	3 1/2" x 8" Hydraulic Cylinder, Hoses & Fittings used for: 35 Series Frame Offsetting 25 & 35 Series Single Gauge Wheel	39#	39#	$ 416
301-010A**	End Plates for RB25, RB26, RB35	30#	30#	$ 145
301-425A	Hydraulic Angle Kit - 16 Series (S/N 701867+)	35#	35#	$ 265
301-426A	Hydraulic Angle Kit - 26 Series	35#	35#	$ 265
301-404A	Hydraulic Angle Kit - 37 Series	40#	40#	$ 320

PART NUMBER	15 SERIES LANDSCAPE RAKE ATTACHMENT*			
302-170A	60" Rake Attachment* (for RB15 Rear Blades S/N 32360+)	170#	211#	$ 605
302-171A	72" Rake Attachment* (for RB15 Rear Blades S/N 32360+)	195#	236#	$ 718
302-172A	84" Rake Attachment* (for RB15 Rear Blades S/N 32360+)	225#	266#	$ 827
302-173A	96" Rake Attachment* (for RB15 Rear Blades S/N 32360+)	245#	286#	$ 912
	25 & 35 SERIES LANDSCAPE RAKE ATTACHMENTS			
302-168A	84" Rake Attachment	230#	255#	$ 1,023
302-169A	96" Rake Attachment	250#	275#	$ 1,158

* Will not fit on 42 option units with serial number 106399 and below.

**Requires hole to be drilled.

Blades

RBT35 Series - 3-Way Hydraulic

2WD: 35-80 HP
4WD: Up to 65 HP

Hitch: Cat. 1 or 2 (Quick Hitch Adaptable)
Hydraulic Adjustments with Hose & Fittings
Blade Angles: Manual: 10 Degree Increments
Hydraulic: Up to 50 Degrees
Offset: Up to 30" Left & Right
Tilt: Up to 20 Degrees
Moldboard: 17" Tall, $^{5}/_{16}$" Thick; $^{3}/_{16}$" Tapered Reinforcement Channel
Moldboard Kingpin: 3"
Cutting Edge: $^{1}/_{2}$" x 6" Heat Treated; Reversible
Main Frame: Fully Welded, Tubular Construction
Retractable Parking Stand
Fits Land Pride Quick-Hitch

MODEL NUMBER	DESCRIPTION		APPROX. MACHINE WEIGHT	SHIPPING WEIGHT	LIST PRICE
RBT3584	**35 SERIES REAR BLADE - 84" width - Base Unit**		709#	829#	$ 2,169
RBT3596	**35 SERIES REAR BLADE - 96" width - Base Unit**		745#	865#	$ 2,252
ADD OPTION NO.	**OFFSET FEATURE**				
-01	Hydraulic Offset - $3^{1}/_{2}$" x 14" Cylinder	(300-216A)	35#	35#	$ 304
-02	Manual Offset Link	(300-217A)	26#	26#	$ 154
	TILT FEATURE				
-11	Hydraulic Tilt - 2" x 6" Cylinder	(300-225A)	25#	25#	$ 261
-12	Manual Tilt Rachet	(890-637C)	13#	13#	$ 63
	ANGLE FEATURE				
-21	Hydraulic Angle - $3^{1}/_{2}$" x 14" Cylinder	(300-216A)	35#	35#	$ 304
-22	Manual Angle Link	(300-224A)	27#	27#	$ 154
	COLOR OPTION				
-82	Orange				
-81	Green				
	ACCESSORIES				
301-208A	Hydraulic Cushion Valve and Hoses			30#	$ 468
301-188A	Hydraulic Selector Valve (for use with two duplex outlets) Will allow operation of 3 cylinders with two tractor outlets			35#	$ 215
301-010A	Side Plates			30#	$ 145
301-186A	Skid Shoes - S/N 633629 & below			42#	$ 211
301-333A	Skid Shoes - S/N 633630 & above			42#	$ 211
300-219A	Single Gauge Wheel - Hydraulically Controlled			85#	$ 797
300-227A	Single Gauge Wheel - Manually Controlled			85#	$ 498

Hydraulic Cushion Valve cushions the shock load to one cylinder by allowing the oil to flow back to the other cylinders.

Blades

RBT40 Series - 3-Way Hydraulic

2WD: 65-100 HP
4WD: Up to 75 HP

Hitch: Cat. 1 or 2 (Quick Hitch Adaptable)
Hydraulic Adjustments with Hose & Fittings
Blade Angles: 15, 30 & 45 Degrees Left & Right: Forward & Reverse
Offset: Up to 30" Left & Right
Tilt: Up to 15 Degrees
Moldboard: 17" Tall, 5/16" Thick; 1/4" Tapered Reinforcement Channel
Moldboard Kingpin: 3"
Cutting Edge: 1/2" x 6" Heat Treated; Reversible
Main Frame: Fully Enclosed Welded, Formed Box
Retractable Parking Stand
Fits Land Pride Quick-Hitch

MODEL NUMBER	DESCRIPTION	APPROX. MACHINE WEIGHT	SHIPPING WEIGHT	LIST PRICE
RBT4084	**40 SERIES REAR BLADE - 84" width - Base Unit**	798#	943#	$ 2,551
RBT4096	**40 SERIES REAR BLADE - 96" width - Base Unit**	848#	993#	$ 2,652
RBT40108	**40 SERIES REAR BLADE - 108" width - Base Unit**	898#	1043#	$ 2,800
ADD OPTION NO.	**OFFSET FEATURE**			
-01	Hydraulic Offset - 3 1/2"x16"x1-1/4" Cylinder (300-181A)	39#	39#	$ 345
-02	Manual Offset Link (300-182A)	31#	31#	$ 215
	TILT FEATURE			
-11	Hydraulic Tilt - 3"x6"x1-1/4" Cylinder (300-183A)	31#	31#	$ 345
-12	Manual Tilt Rachet (890-637C)	13#	13#	$ 63
	ANGLE FEATURE			
-21	Hydraulic Angle - 3 1/2"x16"x1-1/4" Cylinder (300-181A)	39#	39#	$ 345
-22	Manual Angle Link (300-182A)	31#	31#	$ 215
	COLOR OPTION			
-82	Orange			
	ACCESSORIES			
301-208A	Hydraulic Cushion Valve and Hoses for RBT4084 & 96		30#	$ 468
301-187A	Hydraulic Cushion Valve and Hoses for RBT40108		10#	$ 468
301-188A	Hydraulic Selector Valve (for use with two duplex outlets) Will allow operation of 3 cylinders with two tractor outlets		35#	$ 215
301-010A	Side Plates		30#	$ 145
301-186A	Skid Shoes - S/N 633691 & below		42#	$ 211
301-333A	Skid Shoes - S/N 633882 & above		42#	$ 211

Hydraulic Cushion Valve cushions the shock load to one cylinder by allowing the oil to flow back to the other cylinders.

Blades

RBT45 Series - 3-Way Hydraulic

70-125 HP

Hitch: Cat. 2 or 3 (Quick Hitch Adaptable)
Hydraulic Adjustments with Hose
Blade Angles: up to 45 Degrees Left & Right
Forward & Reverse, 4-1/2" x 16" x 2" Cylinder
Offset: Up to 35" Left & Right, 4-1/2" x 16" x 2" Cylinder
Tilt: Up to 15 Degrees, 3-1/2" x 8" x 1-1/4" Cylinder
Moldboard: 19" Tall, 5/16" Thick; 1/4" Tapered
Reinforcement Channel
Cutting Edge: 1/2" x 6" Heat Treated; Reversible
Main Frame: Fully Enclosed Welded, Formed Box
Retractable Parking Stand

MODEL NUMBER	DESCRIPTION	APPROX. MACHINE WEIGHT	SHIPPING WEIGHT	LIST PRICE
RBT4596-011121	**45 SERIES REAR BLADE** 96" Width - Hydraulic Adjustments	1130#	1271#	$ 4,687
RBT45108-011121	**45 SERIES REAR BLADE** 108" Width - Hydraulic Adjustments	1166#	1307#	$ 4,858
ADD OPTION NO.	**COLOR OPTION**			
-82	Orange			
	GAUGE WHEEL OPTIONS			
301-225A	Hydraulic Single Gauge Wheels Includes 6" x 21" Laminated Tire, 3" x 8" Cylinder, Hoses & Fittings		190#	$ 1,510
301-281A	Manual Single Gauge Wheel		190#	$ 1,219
301-236A	Hydraulic Dual Gauge Wheels Includes 2 ea. 6" x 21" Laminated Tires, 3" x 8" Cylinder, Hoses & Fittings		230#	$ 1,774
301-282A	Manual Dual Gauge Wheels		230#	$ 1,483
ACCESSORIES				
301-235A	96" Cylinder Cushion Valve		11#	$ 442
301-234A	108" Cylinder Cushion Valve		12#	$ 442
301-227A	Selector Control Valve-for use with single duplex unit (Will allow operation of 3rd cylinder w/two tractor outlets)		12#	$ 203
301-147A	Side Plates		56#	$ 328
301-186A	Skid Shoes - S/N 633881 & below		42#	$ 211
301-333A	Skid Shoes - S/N 633882 & above		42#	$ 211

Hydraulic Cushion Valve cushions the shock load to one cylinder by allowing the oil to flow back to the other cylinders.

Blades

RBT55 Series - 3-Way Hydraulic

90-180 HP

Hitch: Cat. 2 or 3 (Quick Hitch Adaptable)
Hydraulic Adjustments with Hose
Blade Angles: 15 Positions; 15, 30 & 45 Degrees Left & Right: Forward & Reverse, $4^1/_2$ x 16 x 2 Cylinder
Offset: Up to 33" Left & Right, $4^1/_2$ x 16 Cylinder
Tilt: Up to 30 Degrees, 3 x 8 x 2 Cylinder
Moldboard: 19" Tall, $^5/_{16}$" Thick; $^1/_4$" Tapered
Reinforcement Channel
Cutting Edge: $^1/_2$" x 6" Heat Treated; Reversible
Main Frame: Fully Enclosed Welded, Formed Box
Retractable Parking Stand

MODEL NUMBER	DESCRIPTION	APPROX. MACHINE WEIGHT	SHIPPING WEIGHT	LIST PRICE
RBT55120-011121	**55 SERIES REAR BLADE** 120" Width - Hydraulic Adjustments	1753#	1885#	$ 6,628
ADD OPTION NO.	**COLOR OPTION**			
-82	Orange			
-81	Green			
	GAUGE WHEEL OPTIONS			
301-149A	Hydraulic Single Gauge Wheel Includes 6" x 21" Laminated Tire, 3" x 8" Cylinder, Hoses & Fittings		190#	$ 1,510
301-283A	Manual Single Gauge Wheel		190#	$ 1,219
301-150A	Hydraulic Dual Gauge Wheel Includes 2 ea. 6" x 21" Laminated Tires, 3" x 8" Cylinder, Hoses & Fittings		230#	$ 1,774
301-284A	Manual Dual Gauge Wheel		230#	$ 1,483
ACCESSORIES				
301-110A	Skid Shoes		40#	$ 294
301-147A	Side Plates		56#	$ 328
301-148A	Hardened Wear Edge Plates - Pair		10#	$ 154
300-154A	Double Selector Valve with Stand		37#	$ 477

Bushings may be needed when used with Cat. 2 Quick-Hitch. Please contact our Parts Dept.

Blades

RBT60 Series - 3-Way Hydraulic - Heavy Duty

Max. Tractor HP: 2 Wheel Drive: 10′ - 225 HP 12′ - 175 HP
4 Wheel Drive: 10′ - 200 HP 12′ - 160 HP

Hitch: Cat. 2 or 3 (Quick Hitch Adaptable)
Hydraulic Adjustments with Hoses
Hydraulic Hose Storage
Blade Angles: up to 45 Degrees
Forward & Reverse
Offset: Up to 55" Left & Right
Tilt: Up to 30 Degrees
Moldboard: 19" Tall, 1/2" Thick w/Reinforcement Channel
Kingpin: 4 1/2″ Solid Steel Bar
Cutting Edge: 1/2" x 6" Heat Treated
Main Frame: Fully Enclosed Welded, Formed Box
Retractable Parking Stand
Angle Cylinder: 5″ x 18″
Tilt Cylinder: 3 1/2″ x 8″
Offset Cylinder: 5″ x 18″
Overall Length: 6′6″
Overall Length w/Gauge Wheel: 11′2″

MODEL NUMBER	DESCRIPTION	APPROX. MACHINE WEIGHT	SHIPPING WEIGHT	LIST PRICE
RBT6010	**60 SERIES REAR BLADE** 10′ Width - All Hydraulic Adjustments	2260#	2,442#	$ 8,673
RBT6012	**60 SERIES REAR BLADE** 12′ Width - All Hydraulic Adjustments	2400#	2,582#	$ 9,242
ADD OPTION NO.	**COLOR OPTION**			
-82	Orange			
	GAUGE WHEEL OPTIONS			
301-351A	Hydraulic Dual Gauge Wheel Includes 2 ea. 6" x 21" Laminated Tires, 3 1/2" x 8" Cylinder, Hoses & Fittings	200#	200#	$ 1,892
ACCESSORIES				
301-353A	Skid Shoes - Pair	40#	40#	$ 300
301-355A	Side Plates	56#	56#	$ 335

Quick-Hitch cannot be used in conjunction with Gauge Wheel.

Blades

TB25 Series: Skid Steer Mounted

30-80 HP

Moldboard Construction: Steel
Moldboard Thickness: 10 Gauge
Moldboard Height: 32”
Cut Width @ 30 Deg Maximum Angle: 96: 83”; 108: 93"
Hydraulic Angling: Double-Acting Cylinder & Hoses
Adjustable Spring-loaded Trip Edge Protection
Blade Depth: 41” Approx
Mounting Steps: Serrated
Skid Shoes
Carrier Lift Capacity: Less than 5,000 lbs.
Carrier Max Operating Weight: Less than 8,000 lbs.
Carrier Max Hyd. Output Pressure: 3500 psi max.
Rated Max. Pressure Rating-Hoses & Fittings: 4,000 psi
Replaceable Bottom Wear Edge: 1/2” x 6” Steel or Poly
Optional Blade Marker
Optional Top Mounted Rubber Deflector

MODEL NUMBER	DESCRIPTION	APPROX. MACHINE WEIGHT	SHIPPING WEIGHT	LIST PRICE
TB2596	**25 SERIES TRIP EDGE BLADE - 96” Blade** Universal Plate Attachment	564#		$ 4,218
	YOU MUST CHOOSE ONE WEAR EDGE			
-01	Steel Wear Edge	70#		$ 225
-02	Poly Wear Edge	10#		$ 198
	YOU MAY PICK A DEFLECTOR OPTION			
-21	Top Rubber Deflector Shield	5#		$ 60
TB25108	**25 Series Trip Edge Blade - 108” Blade** Universal Plate Attachment	575#		$ 4,301
	YOU MUST CHOOSE ONE WEAR EDGE			
-01	Steel Wear Edge	78#		$ 253
-02	Poly Wear Edge	11#		$ 214
	YOU MAY PICK A DEFLECTOR OPTION			
-21	Top Rubber Deflector Shield	7#		$ 72
	OTHER OPTIONS			
-11	Blade Marker	5#		$ 44

RETURN TO INDEX

Box Scrapers

BB05 Series

17-25 HP

Hitch: Cat. 0, 1 and 1 Limited
4" x 4" Tubing Main Frame
$^{3}/_{16}$" Side Panels
Two Welded Braces to Rear of Moldboard
$13^{5}/_{16}$" High Moldboard
Heat Treated Spring Steel Shanks
3 Position Shank
Heat Treated Dimpled-on Tips
2 ea. $^{3}/_{8}$" x 6" High Carbon, Heat Treated
Cutting Edges; Reversible & Replaceable
Reinforced Shank Opening
Fits Land Pride Quick-Hitch

MODEL NUMBER	DESCRIPTION	APPROX. MACHINE WEIGHT	SHIPPING WEIGHT	LIST PRICE
BB0548	**05 SERIES BOX SCRAPER - FIXED BAR** - 48" Width - 4 Shanks	277#	327#	$ 766
BB0554	**05 SERIES BOX SCRAPER - FIXED BAR** - 54" Width - 4 Shanks	298#	348#	$ 817

ADDITIONAL SAVINGS
____12-PAK STOCKING PROGRAM____

When any combination of 12 BB05 Series Boxscrapers are ordered at one time
DEDUCT $26 on each unit

Add option No. -99 to Model Number & Deduct $ (26)

ADD OPTION NUMBER	COLOR OPTIONS
-81	Green
-82	Orange
-83	Red

Box Scrapers

RETURN TO INDEX

BB12 Series

17-30 HP

Hitch: Cat. 1 Clevis-Type
4" x 4" Manufactured Shank Tube
$^{3}/_{16}$" x 16" Side Panels
Depth: 22"
Two Welded Braces to Rear of Bucket
Moldboard - 15 $^{3}/_{8}$" High
Heat Treated Spring Steel Shanks
$^{3}/_{4}$" x 2 $^{1}/_{2}$" x 15" Shanks, 4 Position
Reinforced Shank Opening
Heat Treated Dimpled-on Tips, Replaceable
2 ea. High Carbon, Heat Treated
Cutting Edges; Reversible & Replaceable
Fits Land Pride Quick-Hitch

---AVAILABLE IN 2 UNIT PRICING ONLY ---

MODEL NUMBER	DESCRIPTION	APPROX. MACHINE WEIGHT	SHIPPING WEIGHT	LIST PRICE
BB1248	**12 SERIES BOX SCRAPER - FIXED BAR** - 48" Width - 4 Shanks	316#	332#	$ 602
BB1254	**12 SERIES BOX SCRAPER - FIXED BAR** - 54" Width - 4 Shanks	325#	341#	$ 619
BB1260	**12 SERIES BOX SCRAPER - FIXED BAR** - 60" Width - 4 Shanks	346#	362#	$ 635
BB1266	**12 SERIES BOX SCRAPER - FIXED BAR** - 66" Width - 5 Shanks	370#	386#	$ 734
BB1272	**12 SERIES BOX SCRAPER - FIXED BAR** - 72" Width - 6 Shanks	404#	420#	$ 833

ADD OPTION NUMBER	COLOR OPTIONS
-81	Green
-82	Orange

- **Packaged in Like Units of 2; Same Size, Same Color**
- **See RCR12 Program for Terms & Discounts**

Box Scrapers

BB15 Series

17-40 HP

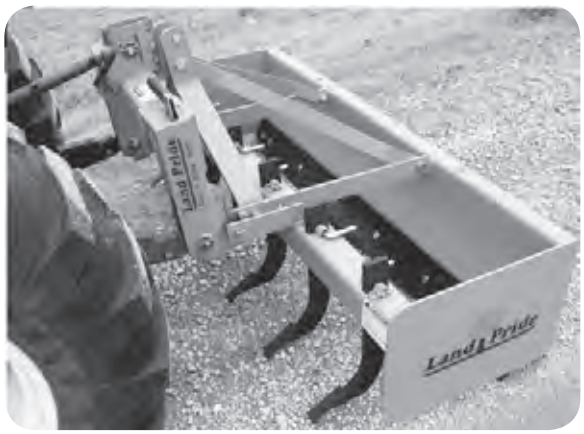

Hitch: Cat. 1
4" x 4" Tubing Main Frame
5/16" Side Panels
Two Welded Braces to Rear of Bucket
Roll-Formed Moldboard - 17" High
Heat Treated Spring Steel Shanks
4 Position Shank
Heat Treated Dimpled-on Tips
2 ea. 1/2" x 6" High Carbon, Heat Treated
Cutting Edges; Reversible & Replaceable
Reinforced Shank Opening
Fits Land Pride Quick-Hitch

MODEL NUMBER	DESCRIPTION	APPROX. MACHINE WEIGHT	SHIPPING WEIGHT	LIST PRICE
BB1548	**15 SERIES BOX SCRAPER - FIXED BAR** - 48" Width - 4 Shanks	382#	439#	$ 905
BB1554	**15 SERIES BOX SCRAPER - FIXED BAR** - 54" Width - 4 Shanks	402#	459#	$ 939
BB1560	**15 SERIES BOX SCRAPER - FIXED BAR** - 60" Width - 4 Shanks	428#	485#	$ 999
BB1566	**15 SERIES BOX SCRAPER - FIXED BAR** - 66" Width - 5 Shanks	450#	507	$ 1,092
BB1572	**15 SERIES BOX SCRAPER - FIXED BAR** - 72" Width - 6 Shanks	504#	561#	$ 1,182

ADDITIONAL SAVINGS
____12-PAK STOCKING PROGRAM____

When any combination of 12 BB15 Series Boxscrapers are ordered at one time
DEDUCT $26 on each unit

Add option No. -99 to Model Number & Deduct $ (26)

ADD OPTION NUMBER	COLOR OPTIONS
-81	Green
-82	Orange
-83	Red

RETURN TO INDEX

Box Scrapers

BB25 Series

25-55 HP

Hitch: Cat. 1
4" x 4" Tubing Main Frame
3/8" Side Panels
Two Welded Braces to Rear of Bucket
Roll-Formed Moldboard - 17" High
Heat Treated Spring Steel Shanks
Double Strap Lower Hitches
4 Position Shank
Heat Treated Dimpled-on Tips
2 ea. 1/2" x 6" High Carbon, Heat Treated Cutting Edges; Reversible & Replaceable
Reinforced Shank Opening
Gusset Between Side Panel and Moldboard
Fits Land Pride Quick-Hitch

MODEL NUMBER	DESCRIPTION	APPROX. MACHINE WEIGHT	SHIPPING WEIGHT	LIST PRICE
BB2560	**25 SERIES BOX SCRAPER - FIXED BAR** - 60" Width - 5 Shanks	471#	531#	$ 1,080
BB2566	**25 SERIES BOX SCRAPER - FIXED BAR** - 66" Width - 5 Shanks	500#	560#	$ 1,204
BB2572	**25 SERIES BOX SCRAPER - FIXED BAR -** 72" Width - 7 Shanks	549#	609#	$ 1,319
BB2584	**25 SERIES BOX SCRAPER - FIXED BAR -** 84" Width - 7 Shanks	593#	653#	$ 1,473
BB2596	**25 SERIES BOX SCRAPER - FIXED BAR -** 96" Width - 8 Shanks	658#	718#	$ 1,595

ADDITIONAL SAVINGS
____12-PAK STOCKING PROGRAM____

When any combination of 12 BB25 Series Boxscrapers are ordered at one time
DEDUCT $26 on each unit
Add option No. -99 to Model Number & Deduct $ (26)

ADD OPTION NUMBER	COLOR OPTION
-82	Orange

Box Scrapers

MR15 Series

25-40 HP 4 Wheel Drive; 20-50 HP 2 Wheel Drive

Hitch: Cat. 1, Clevis Type
Roll-Formed Moldboard - 18 1/2" High
3/4" x 2 1/2" Heat Treated Spring Steel Shanks
3 Position Shank
Heat Treated Dimpled-on Tips
Two 1/2" x 6" High Carbon, Heat Treated
Cutting Edges; Reversible & Replaceable
Rear Back Fill Blade
End Planels 3/8"
4" x 4" Main Beam
Positive Locking System on Shanks
Fits Land Pride Quick-Hitch

MODEL NUMBER	DESCRIPTION	APPROX. MACHINE WEIGHT	SHIPPING WEIGHT	LIST PRICE
MR1572	**15 SERIES MECHANICAL RETRACTABLE -** 72" Width	615#	702#	$ 1,714

ADD OPTION NO.	COLOR OPTION
-82	Orange

Box Scrapers

RETURN TO INDEX

HR25 Series

30-60 HP 2 Wheel Drive; 30-60 HP 4 Wheel Drive

Hitch: Cat. 1 Clevis-type
Roll-Formed Moldboard - 20 1/2" High, double thickness
3/4" x 2 1/2" Heat Treated Spring Steel Shanks
Heat Treated Dimpled-on Tips
Two 1/2" x 6" High Carbon, Heat Treated
Cutting Edges; Reversible & Replaceable
Rear Back Fill Blade
3/8" End Planels
Self Locking down position
Cylinder: 2 3/8" x 4" with hose
Fits Land Pride Quick-Hitch
Painted Black

MODEL NUMBER	DESCRIPTION	APPROX. MACHINE WEIGHT	SHIPPING WEIGHT	LIST PRICE
HR2572	**25 SERIES HYDRAULIC RETRACTABLE** - 72" Width	851#	911#	$ 2,921

ADD OPTION NO.	COLOR OPTION
-82	Orange

Box Scrapers

HR35 / HRL35 Series

40-65 HP

Hitch: Cat. 1 & 2
Hardened Bushings in Upper and Lower Hitch and Shank Beam Pivots
Roll-Formed Moldboard - 23" High Back, 17" Low Back
3/4" x 2 1/2" Heat Treated Spring Steel Shanks
3 Position Shank
Heat Treated Dimpled-on Tips
Two 1/2" x 6" High Carbon, Heat Treated Cutting Edges; Reversible & Replaceable
Rear Back Fill Blade: Fixed or Floating
1/2" End Planels
Transport Lock on Shank Tube

MODEL NUMBER	DESCRIPTION	APPROX. MACHINE WEIGHT	SHIPPING WEIGHT	LIST PRICE
HR3584	**35 SERIES HYDRAULIC RETRACTABLE** - 84" Width - High Back	1119#	1237#	$ 4,447
HRL3578	**35 SERIES HYDRAULIC RETRACTABLE -** 78" Width - Low Back	981#	1099#	$ 4,005

**Prices Include Hydraulic Cylinder with Cushion Valve & Hoses*

ADD OPTION NUMBER	COLOR OPTION
-82	Orange

RETURN TO INDEX

Core Aerators

CA05 Series

Pull-Type

Hitch: Pull-Type

Overall Width w/Wheels:	Working Width:
40″ = 50″	36″
48" = 58"	44″
56" = 66″	52″

Overall Length: $38^{7}/_{8}$″ (48″ w/wheels)
Frame: $2^{1}/_{2}$" x $2^{1}/_{2}$" x $^{3}/_{16}$"
No. of Spoons: 40": 40, 48": 48, 56": 56
Spoon Material: 16 Ga. Hardened Steel
Spoon Spacing (forward travel): 8.5"
*Spoon Penetration: 3"
Gang Spacing: 8″
Independent Gangs, greasable

* Depending on ground conditions and added weight

MODEL NUMBER	DESCRIPTION	APPROX. MACHINE WEIGHT	SHIPPING WEIGHT	LIST PRICE
CA0540	**05 SERIES CORE AERATOR - 40" Width**	74#	79#	$ 538
CA0548	**05 SERIES CORE AERATOR - 48" Width**	88#	93#	$ 658
CA0556	**05 SERIES CORE AERATOR - 56" Width**	98#	103#	$ 779
ADD OPTION NO.				
-01	For 2 Transport Wheels	28#	28#	$ 181
	COLOR OPTION			
-82	Orange			

This product ships unassembled in:
2 Cardboard boxes

Core Aerators

CA15 Series

CAT. 0, 1, 1 LTD.

Hitch: Cat. 0, 1, 1 Ltd.

Overall Width:	Working Width:
48" = 48"	41″
56" = 56″	50″
64″ = 64″	58″
72" = 72"	66″

No. of Spoons: 48": 64, 60" & 72": 96
Spoon Material: 16 Ga. Hardened Steel
Spoon Spacing (forward travel): 7"
*Spoon Penetration: 3" - $4^1/_2$"
Gang Spacing: 48" = $6^1/_2$"
60" = $5^1/_2$" & 72" = $6^1/_2$"
Independent Gangs
Three Corner Support Stands
Fits Land Pride Quick Hitch

* Depending on ground conditions and added weight

MODEL NUMBER	DESCRIPTION	APPROX. MACHINE WEIGHT	SHIPPING WEIGHT	LIST PRICE
CA1548	15 SERIES CORE AERATOR - 48” Width	156#	223#	$ 1,278
CA1556	15 SERIES CORE AERATOR - 56” Width	170#	237#	$ 1,421
CA1564	15 SERIES CORE AERATOR - 64” Width	184#	251#	$ 1,580
CA1572	15 SERIES CORE AERATOR - 72” Width	208#	275#	$ 1,756

ADD OPTION NO.	COLOR OPTION
-82	Orange

Core Aerators

RETURN TO INDEX

CA25 Series

CAT. 1

Hitch: Cat. 1
Working Width: 60", 72"
Overall Width:
60" = 67"
72" = 78"
Frame Tubing: $2^1/_2$" x $2^1/_2$" x $^3/_{16}$"
No. of Spoons: 60" & 72": 96
Spoon Material: 3/4" Hardened Steel
Spoon Spacing (forward travel): 7"
*Spoon Penetration: $4^1/_2$"
Gang Spacing: 60" = $5^1/_2$" & 72" = $6^1/_2$"
Independent Gangs
Four Corner Support Stands
Fits Land Pride Quick Hitch

* Depending on ground conditions and added weight

MODEL NUMBER	DESCRIPTION	APPROX. MACHINE WEIGHT	SHIPPING WEIGHT	LIST PRICE
CA2560	**25 SERIES CORE AERATOR - 60" Width**	464#	530#	$ 3,011
CA2572	**25 SERIES CORE AERATOR - 72" Width**	480#	546#	$ 3,380
ADD OPTION NO.	**LIQUID WEIGHT TANK OPTION**			
-01	Two Liquid Weight Tanks for CA2560 Adds up to 490 lbs. of weight (325-026A)	52#	57#	$ 322
-01	Two Liquid Weight Tanks for CA2572 Adds up to 600 lbs. of weight (325-025A)	59#	64#	$ 322
ADD OPTION NO.	**COLOR OPTION**			
-82	Orange			

Disc Harrows

DH10 Series

CAT. 1

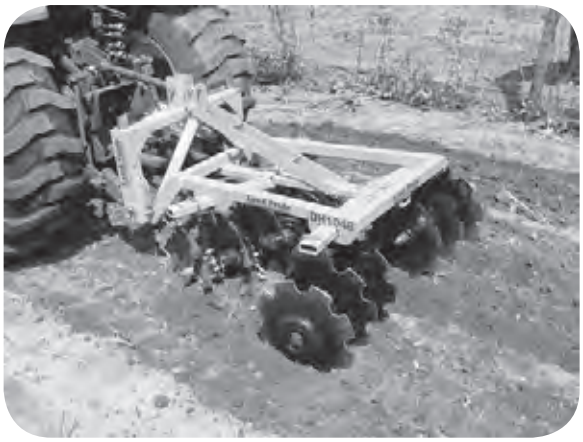

Cat. 1 Hitch
Cutting Widths: 48" & 60"
No. of Blades: 48" - 12
60" - 16
Blade Size: 48": 16" Diameter
60": 16" or 18" Diameter
Blade Types: Notched or Smooth
Frame Tube: 2" square
Blade Spacing: $7^1/_2$"
Bearing Hanger: $^3/_8$" plate, with $^5/_8$" U-bolt
Bearing Type: Self Aligning, Sealed, Ball Bearings
Gang Tube: 3" x $1^1/_2$"
Gang Axle: 1" Square, High Carbon Steel
Angling: Front gang: 0, 7, 14 & 21 Degrees
Rear gang: 0, 7, 14 & 21 Degrees
Fits Land Pride Quick-Hitch

MODEL NUMBER	DESCRIPTION	APPROX. MACHINE WEIGHT	SHIPPING WEIGHT	LIST PRICE
DH1048-01	**10 SERIES DISC HARROW - 48" Width** Front and Rear Notched Discs - 16"	420#	480#	$ 1,329
DH1048-02	**10 SERIES DISC HARROW - 48" Width** Front Notched and Rear Smooth Discs - 16"	420#	480#	$ 1,329
DH1060-01	**10 SERIES DISC HARROW - 60" Width** Front and Rear Notched Discs - 16"	533#	593#	$ 1,477
DH1060-02	**10 SERIES DISC HARROW - 60" Width** Front Notched and Rear Smooth Discs - 16"	533#	593#	$ 1,477
DH1060-03	**10 SERIES DISC HARROW - 60" Width** Front and Rear Notched Discs - 18"	549#	609#	$ 1,570
DH1060-04	**10 SERIES DISC HARROW - 60" Width** Front Notched and Rear Smooth Discs - 18"	549#	609#	$ 1,570

ADD OPTION NO.	COLOR OPTION			
-82	Orange			
	SEEDING OPTION			
-40	Seeding Package (322-156A) Includes: Spin Spreader, Mounting Hardware to Disc Harrow, Hitch for Pulling a Drag Harrow and/or a Seed Bed Roller		25#	$ 722

See SBR page 191
See Drag Harrows page 171

Disc Harrows

RETURN TO INDEX

DH15 Series

CAT. 1

Cat. 1 Hitch
Cutting Widths: 60", 72", 90"
No. of Blades: DH1560: 16,
DH1572: 20, DH1590: 24
Blade Size: 18" Diameter
Blade Types: Notched or Smooth
Frame Tube: $2^1/_2$" square
Blade Spacing: $7^1/_2$"
Bearing Hanger: $^3/_8$" plate,
2 each $^5/_8$" U-bolts
Bearing Type: Self Aligning, Sealed,
Ball Bearings
Gang Tube: 3" x 2"
Gang Axle: 1" Square, High Carbon Steel
Angling: Disc Gang: 0, 7, 14 & 21 Degrees
With angling adjustment handle
Fits Land Pride Quick-Hitch

MODEL NUMBER	DESCRIPTION	APPROX. MACHINE WEIGHT	SHIPPING WEIGHT	LIST PRICE
DH1560-01	**15 SERIES DISC HARROW - 5'2" Width** Front and Rear Notched Discs	628#	716#	$ 1,839
DH1560-02	**15 SERIES DISC HARROW - 5'2" Width** Front Notched and Rear Smooth Discs	634#	722#	$ 1,856
ADD -11	Disc Scrapers on DH1560 (322-040A)	62#	62#	$ 396
DH1572-01	**15 SERIES DISC HARROW - 6'4" Width** Front and Rear Notched Discs	714#	802#	$ 2,007
DH1572-02	**15 SERIES DISC HARROW - 6'4" Width** Front Notched and Rear Smooth Discs	719#	807#	$ 2,026
ADD -11	Disc Scrapers on DH1572 (322-041A)	85#	85#	$ 477
DH1590-01	**15 SERIES DISC HARROW - 90" Width** Front and Rear Notched Discs	865#	953#	$ 2,529
DH1590-02	**15 SERIES DISC HARROW - 90" Width** Front Notched and Rear Smooth Discs	865#	953#	$ 2,552
ADD -11	Disc Scrapers on DH1590 (322-278A)	100#	100#	$ 553
OPTION NO.	**CENTER SWEEP OPTION**			
-20	9" Center Sweep Kit (322-058A) Fits all 15 Series	22#	22#	$ 120
	COLOR OPTION			
-82	Orange			
	SEEDING OPTION			
-40	Seeding Package (322-156A) Includes: Spin Spreader, Mounting Hardware to Disc Harrow, Hitch for Pulling a Drag Harrow and/or a Seed Bed Roller		25#	$ 722

See SBR page 191
See Drag Harrows page 171

RETURN TO INDEX

Disc Harrows

DH25 Series

40-100 HP

Hitch: Cat. 1 & 2
Quick-Hitch Compatible
Cutting Width: 72", 96"
No. of Blades: 20, 24
Blade Size: 20" or 22" Diameter
Blade Types: Front & Rear Notched,
Smooth Rear
Frame Tube: 3" square
Blade Spacing: 7 1/2"
Bearing Hanger: 1/2" plate,
2 each 5/8" U-bolts
Bearing Type: Self Aligning, Sealed,
Ball Bearings
Gang Tube: 4" x 3"
Gang Axle: 1 1/8" Square, High Carbon Steel
Angling: Front gang: 0, 7, 14 & 21 Degrees
Rear gang: 7, 14 & 21 Degrees
With angling adjustment handle
Optional Disc Scrapers
Optional 9" Center Sweep
Fits Land Pride Quick-Hitch

MODEL NUMBER	DESCRIPTION		APPROX. MACHINE WEIGHT	SHIPPING WEIGHT	LIST PRICE
DH2572-70	**25 SERIES DISC HARROW - 72" Width** Front and Rear 20" Notched Discs		947#	1365#	$ 3,237
DH2572-72	**25 SERIES DISC HARROW - 72" Width** Front and Rear 22" Notched Discs		1037#	1440#	$ 3,481
DH2596-70	**25 SERIES DISC HARROW - 96" Width** Front and Rear 20" Notched Discs		1143#	1561#	$ 3,724
DH2596-72	**25 SERIES DISC HARROW - 96" Width** Front and Rear 22" Notched Discs		1254#	1657#	$ 3,967
DH2596-73	**25 SERIES DISC HARROW - 96" Width** 22" Front Notched, Rear Smooth Discs		1257#	1660#	$ 4,008
OPTION NO.	**DISC SCRAPER OPTION**				
-11	Disc Scrapers for DH2572	(322-083A)		92#	$ 525
-11	Disc Scrapers for DH2596	(322-035A)		106#	$ 607
	CENTER SWEEP OPTION				
-20	9" Center Sweep Kit Fits 72" and 96"	(322-059A)	23#	23#	$ 120
	COLOR OPTION				
-82	Orange				
	SEEDING OPTION				
-40	Seeding Package Includes: Spin Spreader, Mounting Hardware to Disc Harrow, Hitch for Pulling a Drag Harrow and/or a Seed Bed Roller	(322-156A)		25#	$ 722

See Seed Bed Roller page 191
See Drag Harrows page 171

RETURN TO INDEX

Disc Harrows

DH35 Series - Pull-Type

DH3510: 45-100 HP

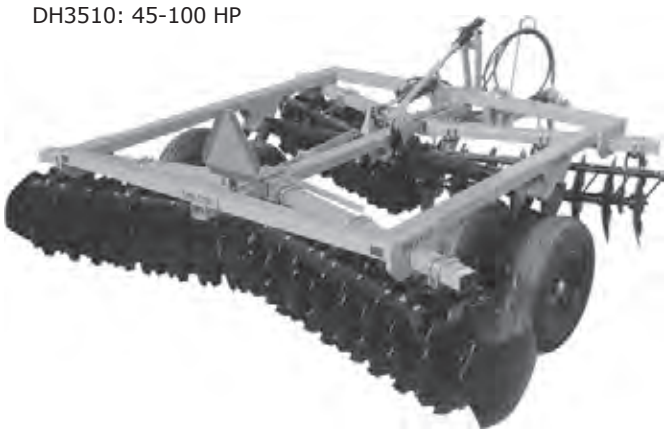

Hitch: Pull-type w/clevis
Cutting Width: 10'6"
Transport Width: 10' 10" base unit
Transport Tires: Two 9.5L x 15 tires
Blade Size: 20" or 22"
Blade Types: Notched or Smooth
Disc Spacing: 7½" or 9"
Front Gang Angle: 15, 18 or 21 degrees
Rear Gang Angle: 12, 15 or 18 degrees
Front to Rear Leveling: Manual crank
Depth Control: 3" x 8" Hydraulic cylinder w/150" hose & fittings
Hitch Frame Construction: 3" x 3" x ¼" wall tubing
Gang Beam Construction: 3" x 5" x ¼" wall tubing
Disc Bearings: Greasable & Triple Sealed Ball Bearings

MODEL NUMBER	DESCRIPTION		APPROX. MACHINE WEIGHT	SHIPPING WEIGHT	LIST PRICE
DH3510	**35 SERIES DISC HARROW - 10' Width**		1197#	1297#	$ 6,031
	FRONT GANG OPTION				
-01	20" Notched Discs – 7½" spacing		647#	847#	$ 1,342
-02	20" Notched Discs – 9" spacing		618#	818#	$ 1,292
-05	22" Notched Discs – 7½" spacing		721#	921#	$ 1,704
-06	22" Notched Discs – 9" spacing		683#	883#	$ 1,614
	REAR GANG OPTION				
-09	20" Notched Discs – 7½" spacing		647#	847#	$ 1,342
-10	20" Notched Discs – 9" spacing		618#	818#	$ 1,292
-11	20" Smooth Discs – 7½" spacing		663#	863#	$ 1,342
-12	20" Smooth Discs – 9" spacing		632#	832#	$ 1,292
-13	22" Notched Discs – 7½" spacing		721#	921#	$ 1,704
-14	22" Notched Discs – 9" spacing		683#	883#	$ 1,614
-15	22" Smooth Discs – 7½" spacing		741#	941#	$ 1,704
-16	22" Smooth Discs – 9" spacing		701#	901#	$ 1,614
	ADDITIONAL OPTIONS				
-20	Dual Gauge Wheel Transport	(322-235A)	140#	180#	$ 678
-30	18" Furrow Filler, Pair	(322-248A)	64#	75#	$ 355
-31	20" Furrow Filler, Pair	(322-249A)	71#	82#	$ 388
-40	Disc Scrapers – 7½" spacing, front and rear (includes 2 Furrow Filler Scrapers)	(322-173A)	154#	174#	$ 678
-41	Disc Scrapers – 9" spacing and 7½" spacing (includes 2 Furrow Filler Scrapers)	(322-174A)	148#	168#	$ 646
-42	Disc Scrapers - 9" spacing, front and rear (includes 2 Furrow Filler Scrapers)	(322-283A)	148#	168#	$ 614
-50	Tongue Jack	(890-118C)	13#	13#	$ 71
-60	Center Sweep	(322-059A)	19#	19#	$ 120
-70	SMV Kit	(322-226S)	4#	4#	$ 41

ADD OPTION NO.	COLOR OPTION
-82	Orange

RETURN TO INDEX

Disc Harrows

DH35 Series - Pull-Type

DH3512: 55-100 HP

Hitch: Pull-type w/clevis
Cutting Width: 12'
Transport Width: 12' 4" base unit
Transport Tires: Two 9.5L x 15 tires
Blade Size: 20" or 22"
Blade Types: Notched or Smooth
Disc Spacing: 7½" or 9"
Front Gang Angle: 15, 18 or 21 degrees
Rear Gang Angle: 12, 15 or 18 degrees
Front to Rear Leveling: Manual crank
Depth Control: 3" x 8" Hydraulic cylinder w/150" hose & fittings
Hitch Frame Construction: 3" x 3" x ¼" wall tubing
Gang Beam Construction: 3" x 5" x ¼" wall tubing
Disc Bearings: Greasable & Triple Sealed Ball Bearings

MODEL NUMBER	DESCRIPTION		APPROX. MACHINE WEIGHT	SHIPPING WEIGHT	LIST PRICE
DH3512	**35 SERIES DISC HARROW – 12' Width**		1197#	1297#	$ 7,269
	FRONT GANG OPTION				
- 01	20" Notched Discs – 7½" spacing		775#	975#	$ 1,472
- 02	20" Notched Discs – 9" spacing		695#	895#	$ 1,421
- 05	22" Notched Discs – 7½" spacing		849#	1049#	$ 1,834
- 06	22" Notched Discs – 9" spacing		760#	960#	$ 1,743
	REAR GANG OPTION				
-09	20" Notched Discs – 7½" spacing		775#	975#	$ 1,472
-10	20" Notched Discs – 9" spacing		695#	895#	$ 1,421
-11	20" Smooth Discs – 7½" spacing		784#	984#	$ 1,472
-12	20" Smooth Discs – 9" spacing		702#	902#	$ 1,421
-13	22" Notched Discs – 7½" spacing		849#	1049#	$ 1,834
-14	22" Notched Discs – 9" spacing		760#	960#	$ 1,743
-15	22" Smooth Discs – 7½" spacing		869#	1069#	$ 1,834
-16	22" Smooth Discs – 9" spacing		778#	978#	$ 1,743
	ADDITIONAL OPTIONS				
-20	Dual Gauge Wheel Transport	(322-235A)	140#	180#	$ 678
-30	18" Furrow Filler, Pair	(322-248A)	64#	75#	$ 355
-31	20" Furrow Filler, Pair	(322-249A)	71#	82#	$ 388
-40	Disc Scrapers – 7½" spacing, front and rear (includes 2 Furrow Filler Scrapers)	(322-175A)	154#	174#	$ 678
-41	Disc Scrapers – 9" spacing and 7½" spacing (includes 2 Furrow Filler Scrapers)	(322-176A)	148#	168#	$ 646
-42	Disc Scrapers - 9" spacing, front and rear (includes 2 Furrow Filler Scrapers)	(322-284A)	148#	168#	$ 614
-50	Tongue Jack	(890-118C)	13#	13#	$ 71
-60	Center Sweep	(322-059A)	19#	19#	$ 120
-70	SMV Kit	(322-226S)	4#	4#	$ 41

ADD OPTION NO.	COLOR OPTION
-82	Orange Paint

Ditchers

DT35 Series

30-60 HP

Cat. 1 & 2, QH Adaptable
Impeller: 16" & 18", 4 Blades with Replaceable Hardened Cutting Edges
80 Chain with Positive Tensioner Bolt
Input/Output Shafts: 2" ID, with Ball Type Bearings
Driveline: Cat. 4 with Shearbolt
Material Control Chute: Manual
Standard Ripper Shank
Parking Stands: 2
Depth Controlling Skid Shoe: Replaceable, 3/8" Thick

MODEL NUMBER	BASE UNIT	APPROX. MACHINE WEIGHT	SHIPPING WEIGHT	LIST PRICE
DT35	**35 SERIES POWERED DITCHER - 540 RPM** 1 3/8" 6 Spline	396#	425#	$ 4,353

	COLOR
-82	Orange

Ditchers

DT55 Series

60-120 HP

Cat. 2 & 3, QH Adaptable
Impeller: 20", 6 Blades with Replaceable Hardened Cutting Edges
Double 80 Chain with Positive Tensioner Bolt
Input/Output Shafts: 14" ID, with Ball Type Bearings
Driveline: Cat. 5 with Shearbolt

OPTIONAL EQUIPMENT

Material Control Chute: Manual or Hydraulic
Depth Control Wheel: 16.5 x 6.50-8 PneumaticTire with 10" Adjustment
Deep Ripper Shank: 3 Adjustments to 5" Below Cutting Level, Spring Tine Tip
Depth Controlling Skidshoe: Replaceable, 3/8" Thick

MODEL NUMBER	BASE UNIT		APPROX. MACHINE WEIGHT	SHIPPING WEIGHT	LIST PRICE
DT55	**55 SERIES POWERED DITCHER - 540 RPM** 1 3/8" 6 Spline		900#	950#	$ 4,770
DTM55	**55 SERIES POWERED DITCHER - 1000 RPM** (You must choose a driveline below)		850#	900#	$ 4,125
	Driveline Option for DTM only				
-31	Cat. 5 Shear Bolt - 1 3/8" - 21 Spline		50#	50#	$ 646
-32	Cat. 5 Shear Bolt - 1 3/4" - 21 Spline		50#	50#	$ 646
ADD OPTION NUMBER	**OPTIONAL EQUIPMENT**				
-12	Depth Controlling Gauge Wheel	(324-050A)	40#	40#	$ 246
-21	Ripper Shank with Toolbar	(324-046A)	157#	157#	$ 518
-41	Material Chute - Ratchet Adjustment	(324-070A)	114#	114#	$ 333
-42	Material Chute - Hydraulic Adjustment	(324-071A)	115#	115#	$ 442
-51	Skid Shoe	(324-056A)	15#	15#	$ 106
	COLOR				
-82	Orange				

RETURN TO INDEX

Drag Harrows

DRG Series

MIN HP: 4′: 8 HP 6′: 12 HP 8′: 16 HP

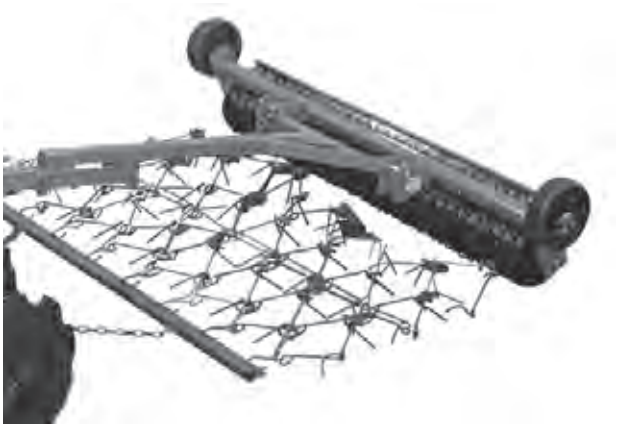

Drag Harrow shown with Seed Bed Roller

Hitch: 2 Log Chains with Pull Ring
Number of Tines: 4′: 60 6′: 90 8′: 120
Tine Diameter: 1/2″
Tine Construction: High Carbon Steel

MODEL NUMBER	DESCRIPTION	APPROX. MACHINE WEIGHT	SHIPPING WEIGHT	LIST PRICE
DRG04	**DRAG HARROW** - 4′W x 4′L	89#	109#	$ 391
DRG06	**DRAG HARROW** - 6′W x 4′L	138#	158#	$ 483
DRG08	**DRAG HARROW** - 8′W x 4′L	185#	205#	$ 575

Drag Scrapers

BB45 Series

70-125 HP

Hitch: Pull-type
Clevis: Swivel Ball, Clevis, Swivel Clevis
Tongue: Removable
Capacity: 10' - 2 1/4 cu.yd
12' - 2 3/4 cu.yd
Dump Clearance: 21"
End Plates: 3/8"
Moldboard: 1/4"
Cutting Edge: 1/2" x 6"
Axle: Fixed or Tilt
Tilt Cylinder: 3" x 8"
3 1/2 Degrees, Approx. 8"
Tires: 15" Implement Recap
Rim: 5 bolt, 4.5"
Weight Tray: Optional - Holds 760 lbs. of Concrete

MODEL NUMBER	DESCRIPTION	APPROX. MACHINE WEIGHT	SHIPPING WEIGHT	LIST PRICE
BB4596	**45 SERIES - 96" DRAG SCRAPER**	890#	900#	$ 2,401
BB4510	**45 SERIES - 10' DRAG SCRAPER**	1,010#	1,020#	$ 2,741
BB4512	**45 SERIES - 12' DRAG SCRAPER**	1,130#	1,140#	$ 3,296
ADD OPTION NO.	**YOU MUST CHOOSE AN AXLE**			
-01	Standard Axle	351#	351#	$ 997
-02	Tilt Axle	411#	411#	$ 1,552
	YOU MAY CHOOSE THE WEIGHT TRAY			
-11	Weight Tray	130#	130#	$ 166
	YOU MUST CHOOSE A HITCH SELECTION			
-70	Clevis Hitch	34#	34#	$ 166
-71	Swivel Ball Hitch	22#	22#	$ 166
-72	Swivel Clevis Hitch (swivels left & right)	34#	34#	$ 333
ADD OPTION NO.	**COLOR OPTION**			
-82	Orange			
	YOU MAY CHOOSE A LIGHT KIT			
-20	Magnetic Light Kit w/Wiring Harness (306-127A)	10#	10#	$ 238

RETURN TO INDEX

Grading Scraper

GS15 Series

48: 20-50 HP; 60/72: 25-50 HP

Hitch: Cat 1, Quick Hitch Compatible
Working Width: 48", 60" and 72"
Overall Width: 52", 66", 78"
Overall Length: 50"
Side Panel Height: $14^5/_8$"
Side Panel Length: 44"
Side Panel Thickness $^3/_{16}$", w/ $2^3/_4$" formed edges
Front Beam: 4" x 4", $^5/_{16}$" wall tubing
Rear Beam: 2" x 2", $^3/_{16}$" wall tubing
Skid Shoes: 3/8" x 3" x 44", Replaceable
Scarifier Shanks: Heat Treated
4 ea on 48" and 60"
5 ea on 72"
4 position, dimpled on hardened tips
Cutting Edges: 2 ea, $^1/_2$" x 6" High Carbon, Heat Treated,
Reversible & Replaceable
Fits Land Pride Quick Hitch

MODEL NUMBER	DESCRIPTION	APPROX. MACHINE WEIGHT	SHIPPING WEIGHT	LIST PRICE
GS1548-01	**GRADING SCRAPER - 48" Width - 4 Shanks**	437#	570#	$ 1,147
	Less shanks - delete -01 from Model No. and Deduct	-44#	-46#	$ -71
GS1560-01	**GRADING SCRAPER - 60" Width - 4 Shanks**	511#	626#	$ 1,283
	Less shanks - delete -01 from Model No. and Deduct	-44#	-46#	$ -71
GS1572-01	**GRADING SCRAPER - 72" Width - 5 Shanks**	594#	682#	$ 1,465
	Less shanks - delete -01 from Model No. and Deduct	-55#	-58#	$ -86

ADD OPTION NO.	COLOR OPTION
-82	Orange

RETURN TO INDEX

Grading Scraper

GS25 Series

40 - 90 HP

Hitch: Cat 1 & 2, Quick Hitch Compatible
Working Width: 84” and 96”
Overall Width: 7'6", 8'6"
Overall Length: 56"
Side Panel Height: 14 5/8”
Side Panel Length: 50”
Side Panel Thickness 1/4”, w/ 2 3/4” formed edges
Front Beam: 4” x 4”, 5/16” wall tubing
Rear Beam: 3” x 3”, 3/16” wall tubing
Skid Shoes: 3/8” x 3”, Replaceable
Scarifier Shanks: Heat Treated
7 ea on 84”
8 ea on 96”
4 position, dimpled on hardened tips
Cutting Edges: 2 ea, 1/2” x 6” High Carbon, Heat Treated, Reversible & Replaceable
Fits Land Pride Quick Hitch

MODEL NUMBER	DESCRIPTION	APPROX. MACHINE WEIGHT	SHIPPING WEIGHT	LIST PRICE
GS2584-01	**GRADING SCRAPER - 84” Width - 7 Shanks**	796#	894#	$ 2,117
	Less shanks - delete -01 from Model No. and Deduct	-77#	-81#	$ -123
GS2596-01	**GRADING SCRAPER - 96” Width - 8 Shanks**	864#	949#	$ 2,266
	Less shanks - delete -01 from Model No. and Deduct	-88#	-92#	$ -140

ADD OPTION NO.	COLOR OPTION
-82	Orange

RETURN TO INDEX

Grapples - Rock

SGR15 Series

Closed Height: 30 3/4"
Number of Bottom Teeth: 21, 23, 25
Spacing of Teeth: 3"
Tooth Thickness: 3/8"
Working Length of Teeth: 38"
Hydraulic Cylinder: 2" x 8" x 1 1/4" Rod
Max. Jaw Opening: 37"
Steel: High Strength Grade 80 Material

NUMBER	DESCRIPTION	APPROX. MACHINE WEIGHT	SHIPPING WEIGHT	LIST PRICE
SGR1566-01	**15 SERIES ROCK GRAPPLE** - 66" Width	855#	869#	$ 3,819
SGR1572-01	**15 SERIES ROCK GRAPPLE** - 72" Width	904#	918#	$ 3,966
SGR1578-01	**15 SERIES ROCK GRAPPLE** - 78" Width	938#	952#	$ 4,113
	For Bucket Only, No Grapple DELETE -01 from Model Number and Deduct from base price		-145#	$ -1,445
ADD OPTION NO.				
-11	Hoses & Flat Face Fitting Bundle 95", Kubota SVL (380-061A)	20#	20#	$ 210
-21	Hydraulic Cylinder Shields - 2 each (380-023A)	34#	34#	$ 130

Grapples - Skeleton

SGS15 Series

Closed Height: 30 3/4"
Number of Bottom Teeth: 12, 14
Spacing of Teeth: 5 1/2"
Tooth Thickness: 3/8"
Working Length of Teeth: 35"
Hydraulic Cylinder: 2" x 8" x 1 1/4" Rod
Max. Jaw Opening: 37"
Steel: High Strength Grade 80 Material

MODEL NUMBER	DESCRIPTION	APPROX. MACHINE WEIGHT	SHIPPING WEIGHT	LIST PRICE
SGS1566-01	**15 SERIES SKELETON GRAPPLE** - 66" Width	680#	694#	$ 3,424
SGS1578-01	**15 SERIES SKELETON GRAPPLE** - 78" Width	732#	746#	$ 3,581
	For Bucket Only, No Grapple DELETE -01 from Model Number and Deduct from base price		-145#	$ -1,445
ADD OPTION NO.				
-11	Hoses & Flat Face Fitting Bundle 95", Kubota SVL (380-061A)	20#	20#	$ 210
-21	Hydraulic Cylinder Shields -2 each (380-023A)	34#	34#	$ 130

Grapples - Manure

SGM15 Series

Closed Height: 33"
Number of Bottom Spears: 8, 9, 9, 10
Number of Top Teeth: 4
Spacing of Spears: 8", 7 1/2", 8 1/4", 8"
Spear Diameter: 1 3/8"
Working Length of Spears: 30"
Hydraulic Cylinder: 2" x 8" x 1 1/4" Rod
Max. Jaw Opening: 40"

MODEL NUMBER	DESCRIPTION	APPROX. MACHINE WEIGHT	SHIPPING WEIGHT	LIST PRICE
SGM1560-01	**15 SERIES MANURE GRAPPLE** - 60" Width	568#	580#	$ 2,539
SGM1566-01	**15 SERIES MANURE GRAPPLE** - 66" Width	596#	608#	$ 2,732
SGM1572-01	**15 SERIES MANURE GRAPPLE** - 72" Width	620#	634#	$ 2,880
SGM1578-01	**15 SERIES MANURE GRAPPLE** - 78" Width	648#	665#	$ 3,084
	For Fork Only, No Grapple DELETE -01 from Model Number and Deduct from base price		-120#	$ -878
ADD OPTION NO.				
-11	Hoses & Flat Face Fitting Bundle 95", Kubota SVL (380-062A)	20#	20#	$ 210
-21	Hydraulic Cylinder Shield (380-038A)	17#	17#	$ 50

RETURN TO INDEX

Grapples - Claw

SGC15 Series

Closed Height: 39"
Number of Bottom Teeth: 10, 12, 14
Number of Top Teeth: 9, 11, 13
Spacing of Teeth: 6"
Tooth Thickness: 1/2"
Working Length of Teeth: 14 3/4"
Hydraulic Cylinder: 2 Qty, 3" x 10" x 1 1/4" Rod
Max. Jaw Opening: 50"
Steel: High Strength Grade 80 Material

MODEL NUMBER	DESCRIPTION	APPROX. MACHINE WEIGHT	SHIPPING WEIGHT	LIST PRICE
SGC1560	**15 SERIES CLAW GRAPPLE** - 63" Width	820#	832#	$ 3,555
SGC1572	**15 SERIES CLAW GRAPPLE** - 74" Width	922#	934#	$ 3,905
SGC1584	**15 SERIES CLAW GRAPPLE** - 86" Width	1030#	1042#	$ 4,305
ADD OPTION NO				
-11	Hoses & Flat Face Fitting Bundle 76", Kubota SVL (380-063A)	20#	20#	$ 210

Grapples - Claw

SGC20 Series

Closed Height: 39"
Number of Bottom Teeth: 10, 12, 14
Number of Top Teeth: 9, 11, 13
Spacing of Teeth: 6"
Tooth Thickness: 1/2"
Working Length of Teeth: 15"
Hydraulic Cylinder: 2 Qty, 3" x 10" x 1 1/4" Rod
Max. Jaw Opening: 50"
Steel: High Tensile AR400

MODEL NUMBER	DESCRIPTION	APPROX. MACHINE WEIGHT	SHIPPING WEIGHT	LIST PRICE
SGC2060	**20 SERIES CLAW GRAPPLE** - 63" Width	798#	809#	$ 3,995
SGC2072	**20 SERIES CLAW GRAPPLE** - 74" Width	895#	907#	$ 4,410
SGC2084	**20 SERIES CLAW GRAPPLE** - 86" Width	999#	1,012#	$ 4,915
ADD OPTION NO				
-11	Hoses & Flat Face Fitting Bundle 76", Kubota SVL (380-063A)	20#	20#	$ 210

RETURN TO INDEX

Hydraulic Reservoir System

HRS18 / HRS23 Series

Minimum HP Required: 28-32
Self Contained

Hitch: Cat 1 & 2 3-Point
PT0 Input: 540 RPM on Pump
Hydraulic Pump Output Capacity: 18 & 23 gpm at 2,000 psi
Reservoir Capacity: 35 Gallon
Reversing Solenoid Valve: Standard
Pressure Relief Valve: Standard
Tank Construction: Steel
In-line Return Filter: 10 Micron
Case Drain Port
HP Requirement: 28hp for 18GPM
32hp for 23gpm
Hydraulic Hose & Fittings: Approx 50ft High Quality Hose & Stainless Hose Clamps

MODEL NUMBER	DESCRIPTION	APPROX. MACHINE WEIGHT	SHIPPING WEIGHT	LIST PRICE
HRS-18	**HYDRAULIC PUMP & RESERVOIR SYSTEM** 540 RPM - 18 gpm	300#	330#	$ 2,836
HRS-23	**HYDRAULIC PUMP & RESERVOIR SYSTEM** 540 RPM - 23 gpm	307#	337#	$ 2,836
	YOU MUST CHOOSE ONE HYDRAULIC PUMP SYSTEM			
-31	PTO Driveline Pump	48#	48#	$ 318
-32	Tractor Mounted Pump	19#	19#	$ 104
	YOU MUST CHOOSE ONE VALVE SELECTION			
-40	No Valve	5#	5#	$ 121
-41	Manual Valve	12#	12#	$ 246
-42	Solenoid Valve	16#	16#	$ 1,042
	YOU MAY CHOOSE ONE OIL COOLER			
-50	**Oil Cooler with Control** (for use with Option -40 or -41, this includes a switchbox with wiring harness)	21#	21#	$ 1,300
-51	**Oil Cooler with Control** (for use with Option -42, wiring for the solenoid valve will also power the cooler)	20#	20#	$ 1,092

This self contained, 3-point auxiliary hydraulic unit allows you to operate hydraulic driven implements with tractors that do not have high enough GPM flow on their own.

RETURN TO INDEX

Hydraulic Reservoir System

HRS30 Series

Minimum HP Required: 52 HP
Self Contained

Hitch: Cat 1 & 2 3-Point
PT0 Input: 540 RPM on Pump, Cat. 2
Hydraulic Pump Output Capacity: 25 gpm at 3,000 psi
Reservoir Capacity: 35 Gallon
Reversing Solenoid Valve: Optional
Manual Reversing Valve: Optional
Pressure Relief Valve: Optional
Tank Construction: Steel
In-line Return Filter: 10 Micron
Case Drain Port
HP Requirement: 52hp for 25GPM
Hydraulic Hose & Fittings: Approx 48ft (24 x 2)
High Quality Hose
Oil Cooler

MODEL NUMBER	DESCRIPTION	APPROX. MACHINE WEIGHT	SHIPPING WEIGHT	LIST PRICE
HRS3025-40	**HYDRAULIC PUMP & RESERVOIR SYSTEM** 540 RPM - 25 gpm with No Valve			$ 4,889
HRS3025-41	**HYDRAULIC PUMP & RESERVOIR SYSTEM** 540 RPM - 25 gpm with Manual Valve			$ 4,943
HRS3025-42	**HYDRAULIC PUMP & RESERVOIR SYSTEM** 540 RPM - 25 gpm with Solenoid Valve			$ 5,541

This self contained, 3-point auxiliary hydraulic unit allows you to operate hydraulic driven implements with tractors that do not have high enough GPM flow on their own.

RETURN TO INDEX

Landscape Rakes

LR05 Series

15-20 HP

Made in USA
Hitch: Cat. 0 with Cat. 1 Pins
Teeth: 1/4" x 3/4" High Carbon Spring Steel;
26 Teeth / 4', 34 Teeth / 5'
Rake Angles: 5 Forward Positions up to 30 degrees
5 Reverse Positions up to 30 degrees
Rake Height: 12"
Teeth Spacing: 1 3/4" Centers
Parking Stand
Rear Blade Adaptable

MODEL NUMBER	DESCRIPTION	APPROX. MACHINE WEIGHT	SHIPPING WEIGHT	LIST PRICE
LR0548	05 SERIES LANDSCAPE RAKE - 48" Width	98#	140#	$ 652
LR0560	05 SERIES LANDSCAPE RAKE - 60" Width	113#	155#	$ 726

ADD OPTION NO.	COLOR OPTION
-82	Orange

See pg. 182 for Accessories

Landscape Rakes

LR16 Series

20-40 HP

Hitch: Cat. 1
Teeth: 5/16" x 1" High Carbon Spring Steel;
30 Teeth / 5', 36 Teeth / 6', 42 Teeth / 7', 48 Teeth / 8'
Teeth Spacing: 2" Centers
LR Rake Angles: 7 Positions Up to Max. 45 Degrees
right or left in 15 degree increments
Rake Height: 16 1/2"
Individually Replaceable Teeth
Rear Blade Adaptable
Parking Stand
Fits Land Pride Quick-Hitch

List Price is for Each:
LR16s Are Packaged 2 Units Per Crate.

MODEL NUMBER	DESCRIPTION	APPROX. MACHINE WEIGHT	SHIPPING WEIGHT	LIST PRICE
LR1660	16 SERIES LANDSCAPE RAKES - 60" Width	241#	281#	$ 861
LR1672	16 SERIES LANDSCAPE RAKES - 72" Width	270#	310#	$ 956
LR1684	16 SERIES LANDSCAPE RAKES - 84" Width	291#	331#	$ 1,069
LR1696	16 SERIES LANDSCAPE RAKES - 96" Width	316#	356#	$ 1,171

ADD OPTION NO.	COLOR OPTION
-82	Orange
-81	Green

See pg. 182 for Accessories

RETURN TO INDEX

Landscape Rakes

LR26 Series

25-60 HP

Hitch: Cat. 1
Teeth: 5/16" x 1" High Carbon Spring Steel;
42 Teeth / 7', 48 Teeth / 8'
Rear Blade Adaptable
Rake Angles:
7 Forward Positions Up to 45 Degrees
3 Reverse Positions Up to 45 Degrees
Rake Height: 16 1/2"
Teeth Spacing: 2" Centers
Individually Replaceable Teeth
Parking Stand
Fits Land Pride Quick-Hitch

MODEL NUMBER	DESCRIPTION	APPROX. MACHINE WEIGHT	SHIPPING WEIGHT	LIST PRICE
LR2684	**26 SERIES LANDSCAPE RAKE** - 84" Width	330#	369#	$ 1,441
LR2696	**26 SERIES LANDSCAPE RAKE** - 96" Width	348#	387#	$ 1,587

ADD OPTION NO.	COLOR OPTION
-82	Orange
-81	Green

See pg. 182 for Accessories

Landscape Rakes

LR36 Series

30-80 HP

Hitch: Cat. 1 & 2 Combination
Teeth: 5/16" x 1" High Carbon Spring Steel;
42 Teeth / 7', 48 Teeth / 8'
Frame Offset: 45 Degree Swing to 26"
Rear Blade Adaptable
Rake Angles:
5 Forward Positions Up to 30 Degrees
Individually Replaceable Teeth
Rake Height: 16 1/2"
Teeth Spacing: 2" Centers
Mechanical or Optional Hydraulics for
Offset Adjustment
Retractable Parking Stand
Fits Land Pride Quick-Hitch

MODEL NUMBER	DESCRIPTION	APPROX. MACHINE WEIGHT	SHIPPING WEIGHT	LIST PRICE
LR3684	**36 SERIES LANDSCAPE RAKES** - 84" Width	460#	500#	$ 1,810
LR3696	**36 SERIES LANDSCAPE RAKES** - 96" Width	483#	523#	$ 1,947

ADD OPTION NO.	COLOR OPTION
-82	Orange
-81	Green

See pg. 182 for Accessories

RETURN TO INDEX

Landscape Rake Accessories

PART NUMBER	DESCRIPTION	APPROX. MACHINE WEIGHT	SHIPPING WEIGHT	LIST PRICE
302-258A	05 Series Dual Gauge Wheels	49#	49#	$ 323
302-174A	15, 16, 25, 26, 35, 36 Series Dual Gauge Wheels - 13" x 6.5" x 6"	86#	86#	$ 477
302-176A	15, 16, 25, 26, 35, 36 Series Dual Gauge Wheels - 13" x 4" x 6"	72#	72#	$ 411
300-014A	25 & 35 Series Single Gauge Wheel - 8" x 4" x 4.8"	55#	55#	$ 526
302-152A+	LR 60" Flip Down Grader Blade w/End Plates (15, 16, 25 & 35 Series)	88#	88#	$ 400
302-105A+	LR 72" Flip Down Grader Blade w/End Plates (15, 16, 25 & 35 Series)	100#	100#	$ 430
302-106A+	LR 84" Flip Down Grader Blade w/End Plates (15, 16, 25, 26, 35, 36 Series)	110#	110#	$ 449
302-107A+	LR 96" Flip Down Grader Blade w/End Plates (15, 16, 25, 26, 35, 36 Series)	122#	122#	$ 468
301-425A	16 Series Rake Hydraulic Angling Kit	30#	30#	$ 255
301-426A	26 Series Rake Hydraulic Angling Kit	32#	32#	$ 255
302-183A*	25 Series Rake Angling Option (Includes: Mounting Bracket, 2"x8" Cylinder, Hose & Fittings)	41#	41#	$ 575
300-081A	$3^1/_2$" x 8" Cylinder, Hose & Fittings For 35 Series Frame Offset & 25 & 35 Series Single Gauge Wheel	39#	39#	$ 416

+ Must be used with Dual Gauge Wheels or bracket set (302-260A available through Parts Dept. only)

REAR BLADE ATTACHMENTS

301-115A**	15 Series: 60" Blade Assembly	185#	226#	$ 359
301-116A**	15 Series: 72" Blade Assembly	195#	236#	$ 442
301-117A**	15 Series: 84" Blade Assembly	220#	261#	$ 542
301-369S	16 Series: 60" Blade Assembly	209#	250#	$ 419
301-370S	16 Series: 72" Blade Assembly	229#	269#	$ 443
301-373S	16 Series: 84" Blade Assembly	251#	292#	$ 505
301-015A	25 & 35 Series: 72" Blade Assembly	250#	291#	$ 605
301-017A	25 Series: 84" Blade Assembly	270#	311#	$ 661
301-019A	25 Series: 96" Blade Assembly	310#	351#	$ 757
301-378S	26 Series: 72" Blade Assembly	330#	371#	$ 520
301-379S	26 Series: 84" Blade Assembly	339#	380#	$ 542
301-380S	26 Series: 96" Blade Assembly	369#	409#	$ 613
301-241A	35 Series: 84" Blade Assembly	280#	321#	$ 751
301-240A	35 Series: 96" Blade Assembly	320#	361#	$ 884
301-399S	36 Series: 72" Blade Assembly	340#	381#	$ 617
301-400S	36 Series: 84" Blade Assembly	376#	407#	$ 686
301-401S	36 Series: 96" Blade Assembly	413#	444#	$ 703

***For Landscape Rakes with Serial Numbers 33160 & Above*

Scarifiers

SF25 Series

25-50 HP

Hitch: Cat. 1
4" x 4" x $^5/_{16}$" Tubing
Shanks: $^3/_4$" x $2^1/_2$" Heat Treated Spring Steel Shanks
Heat Treated Dimpled-on Tips
4 Depth Adjustments
Rear Hitch with Floating Top Link for Second Implement

MODEL NUMBER	DESCRIPTION	APPROX. MACHINE WEIGHT	SHIPPING WEIGHT	LIST PRICE
SF2566	**25 SERIES SCARIFIERS** - 66" Width - 6 Shanks	208#	318#	$ 901
SF2577	**25 SERIES SCARIFIERS** - 77" Width - 7 Shanks	235#	345#	$ 1,033

ADD OPTION NO.	COLOR OPTION
-82	Orange

RETURN TO INDEX

Pallet Forks

PF10 & PF20 Series

Bucket Mounted

Lift Capacity, per set
- PF10: 1,000 lbs.
- PF20: 2,000 lbs.

Fork Tine Length
- PF10: $31^5/_8$”
- PF20: $35^5/_8$”

Fork Tine Width: 3”
Fork Tine Thickness: 2”
Vertical Throat Opening: $1^1/_2$”
Horizontal Throat Depth: $10^3/_4$”

MODEL NUMBER	DESCRIPTION	APPROX. MACHINE WEIGHT	SHIPPING WEIGHT	LIST PRICE PER FORK
PF10	**10 SERIES PALLET FORK - ONE FORK** 1,000 lb. capacity/pair	45#	50#	$ 212
PF20	**20 SERIES PALLET FORK - ONE FORK** 2,000 lb. capacity/pair	55#	60#	$ 267

SHIPMENT: Pallet forks are packaged 2 forks per model. You must order a minimum of 12 forks for shipment on a Land Pride Truck. You may split the 12 forks by model in groups of 6 forks. *(i.e. 6 PF10 forks and 6 PF20 forks)*

Orders for less than 12 forks are only available for LTL shipment.

SERIAL NUMBER: Each fork has a serial number.

PRICING: Price is for ONE PALLET FORK. You MUST order Qty. 2 to get a pair. We price them this way because each fork is serialized. Each fork being serialized will help with:

1) Inventory Control
2) Able to use any two when selling a pair
3) Finance packaging
4) Floorplan terms
5) Selling a set of 3 when requested

Pallet Forks

PFL20 Series
Skid Steer or Front Loader Plate
2,100 lbs. Carrying Capacity

Carrying Capacity: 2,100 lbs
Fork Dimensions: 42"L x 1"D x 4" W
Backframe Guard: 3/16"
Fork Position Lock: Spring Loaded Toggle

MODEL NUMBER	DESCRIPTION	APPROX. WEIGHT	SHIPPING WEIGHT	LIST PRICE
PFL2042	**20 SERIES SKID STEER MOUNTED PALLET FORKS - 42" Forks** 2,100 lbs Carrying Capacity	258#	306#	$ 844
	Packed in Qty of 3 same size Units			
	Quantity less than 3 Units, or those not included in multiple of 3, Add OPTION -99		ADD	$ 55

PFL30 Series
Skid Steer or Front Loader Plate
3,000 lbs. Carrying Capacity

Carrying Capacity: 3,000 lbs
Fork Dimensions: PFL3042: 42"L x 1 1/4"D x 4" W
PFL3048: 48"L x 1 1/4"D x 4" W
Backframe Guard: 3/16"
Fork Position Lock: Spring Loaded Toggle

MODEL NUMBER	DESCRIPTION	APPROX. WEIGHT	SHIPPING WEIGHT	LIST PRICE
PFL3042	**30 SERIES SKID STEER MOUNTED PALLET FORKS - 42" Forks** 3,000 lbs Carrying Capacity	340#	388#	$ 909
PFL3048	**30 SERIES SKID STEER MOUNTED PALLET FORKS - 48" Forks** 3,000 lbs Carrying Capacity	358#	406#	$ 941
	Packed in Qty of 3 same size Units			
	Quantity less than 3 Units, or those not included in multiple of 3, Add OPTION -99		ADD	$ 55

PFL45 Series
Skid Steer or Front Loader Plate
4,500 lbs. Carrying Capacity

Carrying Capacity: 4,500 lbs
Fork Dimensions: 48"L x 1 1/2"D x 4" W
Backframe Guard: 3/16"
Fork Position Lock: Spring Loaded Toggle

MODEL NUMBER	DESCRIPTION	APPROX. WEIGHT	SHIPPING WEIGHT	LIST PRICE
PFL4548	**45 SERIES SKID STEER MOUNTED PALLET FORKS - 48" Forks** 4,500 lbs Carrying Capacity	394#	442#	$ 1,020
	Packed in Qty of 3 same size Units			
	Quantity less than 3 Units, or those not included in multiple of 3, Add OPTION -99		ADD	$ 55

RETURN TO INDEX

Pasture Aerators

AR25 Series - 8’ & 10’ Pull-Type

40-90 HP

Working Width: 7'2" and 9'8"
Overall Length: 10'11”
Hitch: Pull-Type
Clevis: Double Tang
Tongue Jack with Storage
Tines: Forged Steel
Tine Length: 10"
Tine Penetration: Up to 8"*
Tine Spacing: $7^1/_2$"
No. of Tines: 8' - 48, 10’ - 64
Rotor Angle: $2^1/_2$, 5, $7^1/_2$ Degrees, 2 Bolt adjustment
Bearings: Triple Lip Seal
Bearing Hanger: Heavy duty
Tire Size: 9.5Lx15-8 Ply
Wheel Hub: 6 bolt
Weights: Optional Concrete Weights

**Tine penetration is dependent on ground conditions*

MODEL NUMBER	DESCRIPTION	APPROX. MACHINE WEIGHT	SHIPPING WEIGHT	LIST PRICE
AR2596	**25 SERIES - 8' PULL-TYPE PASTURE AERATOR**	1,750#	1,750#	$ 9,656
AR2510	**25 SERIES - 10' PULL-TYPE PASTURE AERATOR**	2,100#	2,100#	$ 11,785
ADD OPTION NO.	**YOU MAY CHOOSE ONE WEIGHT PACKAGE**			
-02	Two Concrete Weights 740 lbs. each	1,480#	1,480#	$ 166
-03	Three Concrete Weights	2,220#	2,220#	$ 249
-04	Four Concrete Weights (10' Model only)	2,960#	2,960#	$ 333
	YOU MAY CHOOSE THE DRAG HARROW CARRIER			
-12	Drag Harrow Carrier	160#	160#	$ 1,130
8' DRAG HARROW				
DRG08	DRAG HARROW - 8'W X 4'L	185#	205#	$ 575
Available through the Parts Department				
325-118A	Trailing Hitch			$ 106

RETURN TO INDEX

Post Hole Diggers

PD10, PD15, PD25 & PD35 Series

10 Series: 15-30 HP (3 YR WARR.)
15 Series: 20-40 HP
25 Series: 25-55 HP
35 Series: 30-75 HP

540 RPM
Tubular Yoke and Boom
Gearbox Input and Output Shields
2" Output Shaft
Teeth: Forged, Individually Replaceable
40 Degree Angle Installed on Flat Side
50 Degree Angle Installed on Angled Side
6" - 2 teeth; 9" - 4 teeth,
12" - 4, 15" - 5, 18" - 6, 24" - 8
Auger Length: 48" (30" on PD10)
Auger Thickness: 1/4"
2 1/2" ID Pipe Pilot: Cast Steel, 3 Drill Points

MODEL NUMBER	BASE UNIT	APPROX. MACHINE WEIGHT	SHIP-PING WEIGHT	LIST PRICE
PD10	**10 SERIES - COMPACT UTILITY DIGGER** Cat. 1 Hitch, 2 7/8" Yoke & Boom 30 HP Gearbox Cat. 2 Shearbolt Driveline	120#	189#	$ 876
		PD10 & PD15 are sold 2 per Crate.		
PD15	**15 SERIES - UTILITY DIGGER** Cat. 1 Hitch, 2 7/8" Yoke & Boom 40 HP Gearbox Cat. 2 Shearbolt Driveline	161#	230#	$ 954
		PD10 & PD15 are sold 2 per Crate.		
PD25-31	**25 SERIES - MEDIUM DUTY DIGGER** Cat. 1 or 2 Hitch 2 7/8" Yoke, 3 1/2" Reinforced Boom 55 HP Gearbox Cat. 3 Shearbolt PTO	186#	255#	$ 1,168
PD35-31	**35 SERIES - HEAVY DUTY DIGGER** Cat. 1 or 2 Hitch 2 7/8" Yoke, 3 1/2" Reinforced Boom 75 HP Gearbox Cat. 3 Shearbolt PTO	233#	302#	$ 1,456
DRIVELINE OPTION - 25 & 35 Series Only				
Cat. 3 Radial Pin Driveline - Delete -31 & ADD -32 to Model Number (Recommended on Auger Size of 15" and above)		31#	31#	$ 127

ADD OPTION NO.	COLOR OPTION
-82	Orange

ADD OPTION NUMBER						
-06	6" Semi-Double Flight Auger-30"	PD10 Only	(317-106A)	35#	35#	$ 265
-09	9" Semi-Double Flight Auger-30"	PD10 Only	(317-109A)	42#	42#	$ 338
-12	12" Semi-Double Flight Auger-30"	PD10 Only	(317-112A)	46#	46#	$ 352
-06	6" Semi-Double Flight Auger	PD15, 25 & 35	(317-030A)	39#	39#	$ 265
-09	9" Semi-Double Flight Auger	PD15, 25 & 35	(317-033A)	52#	52#	$ 338
-12	12" Semi-Double Flight Auger	PD15, 25 & 35	(317-036A)	57#	57#	$ 352
-15	15" Double Flight Auger	PD25 & 35 only	(317-070A)	57#	57#	$ 412
-18	18" Double Flight Auger	PD25 & 35 only	(317-038A)	73#	73#	$ 493
-24	24" Tree Auger	PD25 & 35 only	(317-039A)	96#	96#	$ 666

See Accessories on pg. 187

RETURN TO INDEX

Post Hole Diggers

HD25 & HD35 Series - Hydraulic Drive

HD25: 5-12 gpm; HD35: 10-25 gpm

Cat. l or ll Hitch, or Front loader bucket mount
Tubular Yoke and Boom on 3-point
Gearbox Input and Output Shields
2" Output shaft on Gearbox
Hydraulically Reversible
Auger Teeth: Forged, Individually Replaceable
40 Degree Angle Installed on Flat Side
50 Degree Angle Installed on Angled Side
6" - 2 teeth; 9" - 4 teeth,
12" - 4, 15" - 5, 18" - 6, 24" - 8
Auger Pipe: 2 1/2" ID
Auger Flighting Thickness: 1/4"
Auger Length: 48"
Pilot: Cast Steel, 3 Drill Points

MODEL NUMBER	BASE UNIT		APPROX. MACHINE WEIGHT	SHIP-PING WEIGHT	LIST PRICE
HD25	**25 SERIES HYDRAULIC DIGGER** For 5-12 GPM Systems @ 1500-3000 PSI 700 Ft. lbs. Max torque at 2500 PSI		102#	172#	$ 1,153
HD35	**35 SERIES HYDRAULIC DIGGER** For 10-25 GPM Systems @ 1500-3000 PSI 1605 Ft. lbs. Max torque at 2500 PSI		102#	172#	$ 1,202
ADD OPTION NO.	**COLOR OPTION**				
-82	Orange* (Available only with -03 Option)				
ADD OPTION NO.	**MOUNTING OPTION**				
-01	Bucket Mount without Hydraulic Hoses (black only)		23#	23#	$ 92
-02	Bucket Mount with 24' Hydraulic Hoses (black only)		42#	42#	$ 267
-03	3-Point Mounting and Hoses		94#	94#	$ 497
	AUGER OPTIONS				
-06	6" Semi-Double Flight Auger	(317-030A)	39#	39#	$ 265
-09	9" Semi-Double Flight Auger	(317-033A)	52#	52#	$ 338
-12	12" Semi-Double Flight Auger	(317-036A)	57#	57#	$ 352
-15	15" Double Flight Auger	(317-070A)	57#	57#	$ 412
-18	18" Double Flight Auger	(317-038A)	73#	73#	$ 493
-24	24" Tree Auger	(317-039A)	96#	96#	$ 666
	ACCESSORIES				
317-162A	Alignment Handle - PD10 Only		10#	10#	$ 38
317-159A	Hydraulic Down Pressure Kit - PD10 Only*		30#	30#	$ 538
317-027A	Hydraulic Down Pressure Kit - PD15 Only*		35#	35#	$ 538
317-028A	Hydraulic Down Pressure Kit, 25 & 35 Series*		50#	50#	$ 558
317-166A	PD10 Storage Stand		25#	25#	$ 200
317-142A	Storage Stand - PD15, PD25, PD35, HD2503, HD3503		30#	30#	$ 200
317-042A	Alignment Handle		12#	12#	$ 47
317-040A	7" Auger Extension		9#	9#	$ 113
317-041A	14" Auger Extension		15#	15#	$ 144

*May not work in some cab applications

RETURN TO INDEX

Post Hole Diggers

SA35 Series - Skid Steer Mounted (Planetary)

SA35: 15-25 gpm

Skid Steer Mounting Plate
Hydraulically Driven Planetary Gearbox
Hydraulically Reversible
Output Shaft: 2" Hex or $2^{9}/_{16}$" OD Round
Auger Teeth: Forged, Individually Replaceable
40 Degree Angle Installed on Flat Side
50 Degree Angle Installed on Angled Side
9" - 4 teeth, 12" - 4, 15" - 5, 18" - 6,
24" - 8, 30" - 10, 36" - 12
Tree Augers: 24" - 9, 30" - 11, 36" -13
Auger Pipe: $2^{1}/_{2}$" ID
Auger Flighting Thickness: $^{1}/_{4}$"
Auger Length: 48", 46" length on 9"
Pilot: Cast Steel, 3 Drill Points

MODEL NUMBER	DESCRIPTION		APPROX. MACHINE WEIGHT	SHIPPING WEIGHT	LIST PRICE
SA35-01	**35 SERIES HYDRAULIC POST HOLE DIGGER** Skid Steer Attachment $2^{9}/_{16}$" Round Output Shaft 15-25 GPM Hydraulic Motor		362#	431#	$ 2,916
ADD OPTION NUMBER	**FOR $2^{9}/_{16}$" ROUND OUTPUT SHAFTS**				
-10	9" Double Flight Auger	(317-096A)	70#	70#	$ 413
-13	12" Double Flight Auger	(317-099A)	98#	98#	$ 468
-16	15" Double Flight Auger	(317-102A)	119#	119#	$ 600
-19	18" Double Flight Auger	(317-105A)	131#	131#	$ 661
-25	24" Double Flight Auger	(317-108A)	214#	214#	$ 774
-27	24" Tree Auger	(317-111A)	162#	162#	$ 705
-31	30" Double Flight Auger	(317-114A)	285#	285#	$ 1,135
-33	30" Tree Auger	(317-117A)	236#	236#	$ 1,060
-37	36" Double Flight Auger	(317-120A)	380#	380#	$ 1,359
-39	36" Tree Auger	(317-123A)	305#	305#	$ 1,288
SA35-02	**35 SERIES HYDRAULIC POST HOLE DIGGER** Skid Steer Attachment 2" Hex Output Shaft 15-25 GPM Hydraulic Motor		366#	435#	$ 2,916
ADD OPTION NUMBER	**FOR 2" HEX OUTPUT SHAFTS**				
-09	9" Double Flight Auger	(317-095A)	70#	70#	$ 413
-12	12" Double Flight Auger	(317-098A)	98#	98#	$ 468
-15	15" Double Flight Auger	(317-101A)	119#	119#	$ 600
-18	18" Double Flight Auger	(317-104A)	131#	131#	$ 661
-24	24" Double Flight Auger	(317-107A)	214#	214#	$ 774
-26	24" Tree Auger	(317-110A)	162#	162#	$ 705
-30	30" Double Flight Auger	(317-113A)	285#	285#	$ 1,135
-36	36" Double Flight Auger	(317-119A)	380#	380#	$ 1,359
-38	36" Tree Auger	(317-122A)	305#	305#	$ 1,288
	AUGER EXTENSIONS				
317-129A	2" Hex - 24" Auger Extension		32#	32#	$ 440
317-131A	2" Hex - 48" Auger Extension		56#	56#	$ 640
317-133A	$2^{9}/_{16}$" Round - 24" Auger Extension		25#	25#	$ 255
317-135A	$2^{9}/_{16}$" Round - 48" Auger Extension		37#	37#	$ 385

RETURN TO INDEX

Powered Rakes

PR16 Series - Tractor Mounted

25-40 HP: PR1660 & PR1672
35-75 HP: PR1690

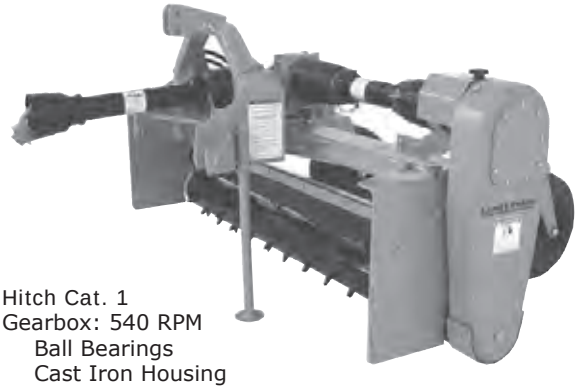

Hitch Cat. 1
Gearbox: 540 RPM
Ball Bearings
Cast Iron Housing
Drain Plug
Primary Driveline: Cat. 3

Secondary Driveline: Cat. 3 with Slip-Clutch
Material Control Deflector: 1/2" x 5" Hard Urethane
Roller: 9 3/8" Diameter with 3/4" x 1 1/2" Carbide Tipped Studs
Ball Bearings at Roller Ends
Drive Chain: #50 Double Continuous Roller Chain High Tensile, Enclosed in Oil Bath
Angle Adjustment: 15 Degrees Left & Right
Angle Cylinder: 2" x 8", or Manual Angling Adjustment
Removable End Plates with Storage Rack
Gauge Wheels: Air Tires with Sealant and 3/4" Roller Bearings & Spacer Height Adjustment:
60": 13" x 6.5"
72" & 90": 16.5" x 6.5"
Replaceable Skid Shoes
Fits Land Pride Quick-Hitch

MODEL NUMBER	DESCRIPTION	APPROX. MACHINE WEIGHT	SHIPPING WEIGHT	LIST PRICE
PR1660-0121	**16 SERIES POWERED RAKE - 60" Width** Carbide Tipped Studded Roller - Manual Angling	980#	1060#	$ 9,249
PR1660-0221	**16 SERIES POWERED RAKE - 60" Width** Carbide Tipped Studded Roller - Hydraulic Angling	980#	1060#	$ 9,428
PR1672-0121	**16 SERIES POWERED RAKE - 72" Width** Carbide Tipped Studded Roller - Manual Angling	1000#	1080#	$ 9,803
PR1672-0221	**16 SERIES POWERED RAKE - 72" Width** Carbide Tipped Studded Roller - Hydraulic Angling	1000#	1080#	$ 9,982
PR1690-0121	**16 SERIES POWERED RAKE - 90" Width** Carbide Tipped Studded Roller - Manual Angling	1150#	1230#	$ 10,627
PR1690-0221	**16 SERIES POWERED RAKE - 90" Width** Carbide Tipped Studded Roller - Hydraulic Angling	1150#	1230#	$ 10,806

ADD OPTION NO.	COLOR OPTION
-82	Orange

Powered Rakes

SR26 Series - Skid Steer Mounted

Minimum Hydraulics Required: 72": 11 gpm @ 2200 PSI
90": 15 gpm @ 2500 PSI

Hydraulic Driven
Bi-directional
Material Control Deflector:
2 each - 1/2" x 5" Hard Urethane
Roller: 9 3/8" Diameter with 3/4" x 1 1/2" Carbide Tipped Studs
Roller Bearings at Roller Ends

Roller Speed: 195 @ 18 gpm
Drive Chain: #50 Double Continuous Roller Chain High Tensile, Enclosed in Oil Bath
Angle Adjustment: 22 Degrees Left & 18 Degrees Right, Forward or Reverse
Angle Cylinder: 2" x 8"
End Plates with Storage Pins
Gauge Wheels: 16.5" x 6.5" Air Tires with Sealant & 3/4" Roller Bearings and Spacer Height Adjustment
Replaceable Skid Shoes

MODEL NUMBER	DESCRIPTION	APPROX. MACHINE WEIGHT	SHIPPING WEIGHT	LIST PRICE
SR2672-2190	**26 SERIES SKID STEER POWERED RAKE** 72" Width; Carbide Tipped Studded Roller	930#	1010#	$ 10,708
SR2690-2190	**26 SERIES SKID STEER POWERED RAKE** 90" Width; Carbide Tipped Studded Roller	1020#	1100#	$ 11,362

ADD OPTION NO.	COLOR OPTION
-82	Orange

RETURN TO INDEX

Quick-Hitches

QH15 Cat. 1 & QH20 Cat. 2 Series

Overall Width: QH15: 32 5/8" QH20: 40"
Height: QH15: 23 1/4" QH20: 23 5/8"
Length: QH15: 9" QH20: 8 7/8"
Tractor Hitch: QH15: Cat. 1, 3-Point
QH20: Cat 2, 3-Point
Automatic Lock on Lower 3-Point Arms

Optional Floating Top Link Attachment Allows Quick-Hitch to be Used with Implements Which Also Have a Floating Top Link

QH15 - Can be Shipped UPS or Fed-Ex (singles only)

MODEL NUMBER	DESCRIPTION		APPROX. MACHINE WEIGHT	SHIPPING WEIGHT	LIST PRICE
QH15	CAT. 1 QUICK-HITCH		70#	72#	$ 453
QH15-01	CAT. 1 QUICK-HITCH with Floating Top Link	(320-013A)	73#	75#	$ 480
QH20	CAT. 2 QUICK-HITCH		120#	130#	$ 678
QH20-01	CAT. 2 QUICK-HITCH with floating top link	(320-028A)	125#	135#	$ 711

ADDITIONAL SAVINGS
_____12-PAK PRICING____
Order a combination of 12 units at one time - DEDUCT $52 on each unit.
Add option No. -99 to Model Number & Deduct $ (52)

Different implements may need lower hitch bushings for a tight attachment. Please see the Quick-Hitch Operator's Manual for a list of available bushings.

PTO driven implements may need a longer driveline. Please consult our Service & Parts Department for longer profile availability.

Skid Steer Hitch

SH35 Skid Steer Series

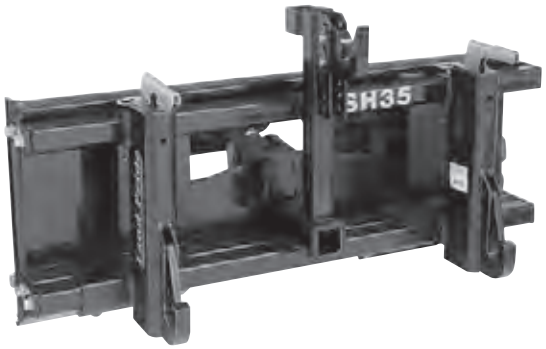

Adjusts for Cat. 1 or 2 non-PTO implements
Adjustable Top Hook
Automatic Lock on Lower 3-Point
Class II Receiver and Storage Rack for Ball Hitch
Width: 46 3/8"
Height: 25"

MODEL NUMBER	DESCRIPTION	APPROX. MACHINE WEIGHT	SHIPPING WEIGHT	LIST PRICE
SH35	SKID STEER 3-POINT HITCH	225#	278#	$ 1,151

Seed Bed Roller

RETURN TO INDEX

SBR Series

18-52 HP

Hitch: Cat 1 with optional Pull-Type tongue with indexing Clevis and 2" Ball combination
Working Width: 72"
Overall Width: 3 Point: 72: 77"
Pull Type: 72: 84"
Roller Diameter: 11 3/8"
Roller Material: Gray Iron
Profiled Roller Scraper
Transport Tires on Pull Type, 2 ea 10" x 3 1/4"
Hitch Support Stand
Fits Land Pride Quick Hitch (3 Point model)

MODEL NUMBER	DESCRIPTION	APPROX. MACHINE WEIGHT	SHIPPING WEIGHT	LIST PRICE
SBR72	**72" SEED BED ROLLER** - 3 Point Cat. 1 Hitch	442#	462#	$ 1,619
SBR72-01	**72" SEED BED ROLLER** - with Pull Tongue & Transport Tires	500#	520#	$ 2,076

ADD OPTION NO.	COLOR OPTION
-82	Orange

*When Pull Tongue is removed, hitch straps can be rotated upward to form a 3-point hitch.

Use as a stand alone product, or combine with a Disc Harrow (DH Series) with the Seeding Option package (option no. 40), and a Drag Harrow (DRG Series) for a complete seeding package!

Snow Blowers

SB10 Series

SB1051: 18-32 HP; SB1064: 18-59 HP

Working Width: 51", 64"
Main Housing Material: 12 Gauge
Hitch: Cat 1, QH
Side Plate Material: 3/16"
Impeller Diameter: 51: 20"; 64: 24"
Impeller Housing Depth: 51: 6"; 64: 8"
Impeller Blades: 4
Auger Diameter: 51: 14"; 64: 16"
Drive Chain: #60
Auger Paddles: 51: 2; 64: 4
Chute Opening at Base: 51: 8"; 64: 10"
Chute Rotation: Sprocket Type; Manual, Electric or Hydraulic
Chute Deflector Operation: Manual, Electric or Hydraulic
Driveshaft Shear Bolt: Grade 5 - 1/4 x 20
PTO Driveline: Cat. 2, Shear Bolt
Optional Cutting Edge: Bolt-on, Reversible & Replaceable Hardened Steel, Full Width
Optional Skid Shoes:
- Outer: Bolt-on, Adjustable & Replaceable
- Wear Plate: Bolt-on, Replaceable & Reversible
- Button Style: Adjustable & Replaceable, In-board, Rear

MODEL NUMBER	DESCRIPTION		APPROX. MACHINE WEIGHT	SHIPPING WEIGHT	LIST PRICE
SB1051	**10 SERIES - 51" SNOW BLOWER**		378#	428#	$ 2,514
SB1064	**10 SERIES - 64" SNOW BLOWER**		438#	493#	$ 2,874
ADD OPTION NO.	**You MUST Choose a Chute Adjustment**				
-10	Manual Rotation Adjustment - SB1051	(370-122A)	5#		$ 79
-10	Manual Rotation Adjustment - SB1064	(370-099A)	5#		$ 79
-11	Hydraulic Rotation Adjustment	(370-339A)	21#		$ 468
-12	Electric Rotation Adjustment (You must also select Option 30*)	(370-344A)	18#		$ 411
	You MUST Choose a Chute Adjustment				
-20	Manual Chute Adjustment	(370-030A)	2#		$ 33
-21	Hydraulic ChuteAdjustment	(370-023A)	32#		$ 206
-22	Electric Chute Adjustment (You must also select Option 30*)	(370-029A)			$ 446
	You Must Choose a Wire Harness if Option -12 or -22 is Chosen				
-30	Harness for Electric Tilt Adjustment (use with Option-12 or-22 only)	(370-118A)			$ 186
	You May Choose a Side Skid Option				
-40	Side Plates	(370-106A)	14#		$ 35
-41	Outer Skid Shoes	(370-115A)	8#		$ 38
	You May Choose a Rear Skid Shoe Option				
-50	Button Style Shoes	(370-105A)	19#		$ 110
	You May Choose a Cutting Edge Option				
-60	Hardened Cutting Edge - SB1051 Only	(370-107A)	11#		$ 114
-60	Hardened Cutting Edge - SB1064 Only	(370-110A)	14#		$ 140
	Color Options				
-82	Orange				

* You only need one Option 30 if either or both Electric Rotation and/or Electric Tilt is selected

Snow Blowers

SB15 Series / SB25 Series

30-59 HP / 43-105 HP

Working Width : 74", 84"
Hitch: 74": Cat 1, 84": Cat 1 & 2
Main Housing Material: 12 Gauge
Side Plate Material: 3/16"
Impeller: 24" Diameter
Impeller Housing Depth: 74: 8", 84: 10"
Impeller Blades: 4
Auger: 16" Diameter
Auger Paddles: 4
Drive Chain: #60
Chute Opening at Base: 74: 10", 84: 12"
Chute Rotation: Sprocket Type; Manual, Electric or Hydraulic
Chute Deflector Operation: Manual, Electric or Hydraulic
Driveshaft Shear Bolt: Grade 5 - 1/4 x 20
PTO Driveline: Cat. 3 Heavy, Shear Bolt
Optional Cutting Edge: Bolt-on, Reversible & Replaceable Hardened Steel, Full Width
Optional Skid Shoes:
- Outer: Bolt-on, Adjustable & Replaceable
- Wear Plate: Bolt-on, Replaceable & Reversible
- Button Style: Adjustable & Replaceable, In-board, Rear

MODEL NUMBER	DESCRIPTION		APPROX. MACHINE WEIGHT	SHIPPING WEIGHT	LIST PRICE
SB1574	**15 SERIES - 74" SNOW BLOWER**		579#	673#	$ 3,389
SB2584	**25 SERIES - 84" SNOW BLOWER**		701#	783#	$ 4,021
ADD OPTION NO.	**You MUST Choose a Chute Adjustment**				
-10	Manual Rotation Adjustment - SB1574	(370-099A)	8#		$ 79
-10	Manual Rotation Adjustment - SB2584	(370-099A)	8#		$ 79
-11	Hydraulic Rotation Adjustment - SB1574 & SB2584	(370-340A)	22#		$ 468
-12	Electric Rotation Adjustment - SB1574 & SB2584 (You must also select Option 30)*	(370-344A)	18#		$ 411
	You MUST Choose a Chute Adjustment				
-20	Manual Chute Adjustment	(370-030A)	2#		$ 33
-21	Hydraulic Chute Adjustment	(370-023A)	32#		$ 206
-22	Electric Chute Adjustment (You must also select Option 30)*	(370-029A)			$ 446
	You Must Choose a Wire Harness if Option -12 or 22 is Chosen				
-30	Harness for Electric Chute and/or Tilt Adjustment (370-118A)				$ 186
	You May Choose a Skid Shoe Option				
-40	Side Plates	(370-106A)	14#		$ 35
-41	Outer Skid Shoes	(370-115A)	8#		$ 38
	You May Choose a Rear Skid Shoe Option				
-50	Button Style Skid Shoes	(370-105A)	19#		$ 110
	You May Choose a Cutting Edge Option				
-60	Hardened Cutting Edge - SB1574 Only		16#		$ 166
-60	Hardened Cutting Edge - SB2584 Only	(370-111A)	18#		$ 192
	Color Options				
-82	Orange				

* You only need one Option 30 if either or both Electric Rotation and/or Electric Tilt is selected

RETURN TO INDEX

Soil Pulverizers

SP20 Series

25-35 HP

Hitch: Cat. 1
Single 5 9/16" Steel Spiked Roller
$^{3}/_{8}$" x $1^{1}/_{4}$" Steel Spikes with Replaceable Sleeve
32 Pound/Inch Springs on Roller
Self-Aligning Cast 1" Bearings with Double Lip Seals
No. of Scarifiers - 21 on 60", 25 on 72"
Scarifiers: $10^{1}/_{2}$" x 2" x $^{1}/_{2}$" - Reversible
Scarifier Spacing: $2^{13}/_{16}$"
10" Frame Beam
1" Diameter Shaft in Roller
Fits Land Pride Quick-Hitch

MODEL NUMBER	DESCRIPTION	APPROX. MACHINE WEIGHT	SHIPPING WEIGHT	LIST PRICE
SP2060-02-61	**20 SERIES SOIL PULVERIZER** - 60" Width Single Spike Roller, Wide 2" Shanks	491#	526#	$ 1,671
SP2072-02-61	**20 SERIES SOIL PULVERIZER** - 72" Width Single Spike Roller, Wide 2" Shanks	561#	596#	$ 1,971

ADD OPTION NO.	COLOR OPTION
-82	Orange

Soil Pulverizers

SP30 Series

30-50 HP

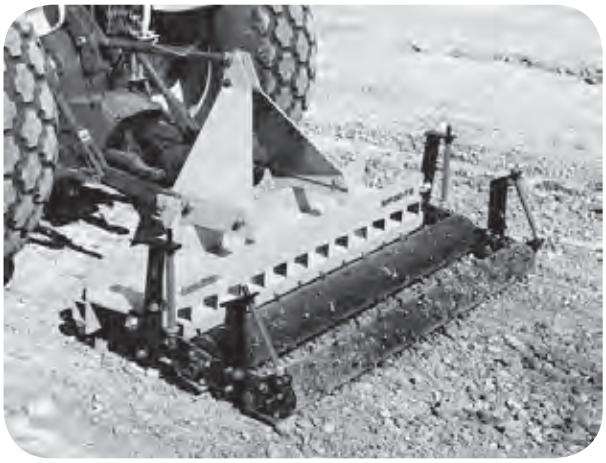

Hitch: Cat. 1 - Clevis Type Lower Hitch
Formed Plate A-Frame
Choice of: Single $6^5/_8$" Steel Spiked Roller
Double Roller: Front $6^5/_8$" - Rear $5^9/_{16}$"
$^3/_8$" x $1^1/_4$" Steel Spikes with Replaceable Sleeve
32 Pound/Inch Springs on Front Roller, 15 lbs. on Rear Roller
Self-Aligning Cast 1" Bearings with Double Lip Seals
12" Frame Beam
No. of Scarifiers - 25 on 72", 29 on 84"
Scarifiers: 10 $^1/_2$" x 2" x $^1/_2$" - Reversible
Scarifier Spacing: 2 13/16"
1" Diameter Shaft in Roller
Fits Land Pride Quick-Hitch

MODEL NUMBER	DESCRIPTION	APPROX. MACHINE WEIGHT	SHIPPING WEIGHT	LIST PRICE
With Single Spike Roller				
SP3072-02-61	**30 SERIES SOIL PULVERIZER** - 72" Width Wide 2" Shanks	728#	783#	$ 2,273
SP3084-02-61	**30 SERIES SOIL PULVERIZER** - 84" Width Wide 2" Shanks	850#	905#	$ 2,535
With Double Spike Roller				
SP3072-02-62	**30 SERIES SOIL PULVERIZER** - 72" Width Wide 2" Shanks	883#	938#	$ 3,073
SP3084-02-62	**30 SERIES SOIL PULVERIZER** - 84" Width Wide 2" Shanks	1030#	1085#	$ 3,442

ADD OPTION NO.	COLOR OPTION
-82	Orange

RETURN TO INDEX

Spike Tooth Harrows

STH15 Series

CAT. 1 - Up to 45 HP

Made in USA
Hitch: Cat 1
Working Width: 88 5/8"
Machine Width: 90 7/8"
Front to Rear Length: 4' 5"
No. of Bars: 5
Tooth Bar: 1 11/16" OD
Chain Suspension for Flexibility
Spike Tooth: Diamond Shaped, 8 1/2" Forge Hardened Tip
Tooth Angles: 10
Tooth Spacing: 9"
No. of Teeth: 50 (10 per bar)
Tooth Ground Contact: Every 1 3/4"

MODEL NUMBER	DESCRIPTION	APPROX. MACHINE WEIGHT	SHIPPING WEIGHT	LIST PRICE
STH1590	**15 SERIES SPIKE TOOTH HARROW - 90" Width**	224#	287#	$ 1,054

ADD OPTION NO.	COLOR OPTION
-82	Orange

RETURN TO INDEX

Spike Tooth Harrows

STH20 Series

Min. HP - 48 ; Pull-Type

Made In USA
Hitch: Pull Type with Clevis
Tongue Weight: 432 lbs.
Working Width: 23'7"
Transport Width: 8'6"
Transport Height: 8'8"
Transport Length: 15'
Field Length: 23'
No. of Bars: 8
Tooth Bar: 1 11/16" OD
Spike Tooth: Diamond Shaped,
8 1/2" Forge Hardened Tip
Tooth Spacing: 9"
No. of Teeth: 244
Teeth on Ground/ft: 12
Transport Tires: 4 ea, 205R15
Wheel Hub: 4 bolt
Replaceable Wheel Spindles
Lift Cylinder: 3 1/2"x8"
Wing Cylinders: 2"x14"

MODEL NUMBER	DESCRIPTION	APPROX. MACHINE WEIGHT	SHIPPING WEIGHT	LIST PRICE
STH2024	20 SERIES SPIKE TOOTH HARROW - 24' Folding	2,100#	2,100#	$ 9,091

ADD OPTION NO.	COLOR OPTION
-82	Orange

FREIGHT
Does Not Qualify for Free Freight.
LP Truck Freight Rates Apply.

ASSEMBLY REQUIRED
Allow approximately 30 minutes.
Teeth are pre-assembled to the bar.

Straw Crimper

RETURN TO INDEX

CR25 Series

CAT. 1

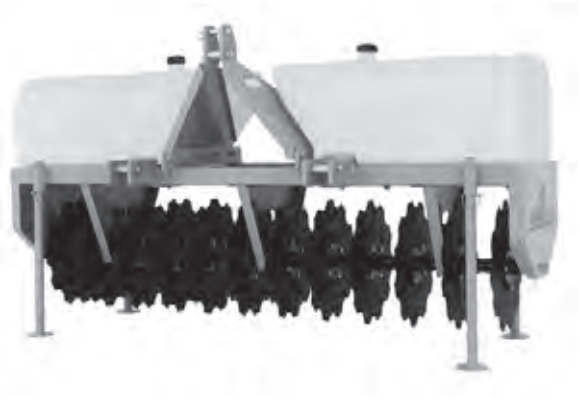

Hitch: Cat. 1
Working Width: 69"
Overall Width: 80"
Height: 41"
Length: 26"
Number of Discs: 12
4 Bolt Cast Iron Hubs
Disc Spacing: 6 1/2"
Four Corner Support Stands
Fits Land Pride Quick Hitch

MODEL NUMBER	DESCRIPTION	APPROX. MACHINE WEIGHT	SHIPPING WEIGHT	LIST PRICE
CR2572	**25 SERIES STRAW CRIMPER** - 72" Width	475#	542#	$ 2,619
ADD OPTION NUMBER	**LIQUID WEIGHT TANK OPTION**			
-01	Two Liquid Weight Tanks for CR2572 Adds up to 600 lbs. of weight (325-025A)	59#	64#	$ 322
ADD OPTION NO.	**COLOR OPTION**			
-82	Orange			

RETURN TO INDEX

Stump Grinder

SSG25 Series

Quick Attach Mounting Plate

Overall Mounting Width: 48"
Overall Length (w/o Shielding): 60"
Drive System: Hydraulic Motor w/Electric over Hydraulics
Hydraulic Requirements: 17-32 gpm
Angle & Lift Cylinders: 3" x 6" Stroke w/1-1/4" Rod Diameter
Hydraulic Lines & Hoses: 3/4"
Cutting Wheel: 1/2" Thick x 24" Diameter w/Carbide Teeth
Number of Carbide Teeth: 32
Cutting Wheel Speed: 640 rpm @ 18 gpm
Cutting Arc: 55 Degrees
Max Cutting Depth: 8"
Greasable Hinge Points: Yes
Main Frame: 6" x 6" x 1/4" Tube

MODEL NUMBER	DESCRIPTION	APPROX. MACHINE WEIGHT	SHIPPING WEIGHT	LIST PRICE
SSG2524	**25 SERIES STUMP GRINDER**	540#	650#	$ 5,641
ADD OPTION NUMBER				
-20	Flat-Faced Hydraulic Quick Couplers	1#	1#	$ 103
-31	Control Harness	5#	5#	$ 250
-32	14-Pin Wiring Harness	3#	3#	$ 145
-33	14-Pin Wiring Harness, JD	3#	3#	$ 145
-34	14-Pin Wiring Harness, JD E-H	3#	3#	$ 145

Wood Chipper

RETURN TO INDEX

WC15 Series

12-30 HP

Hitch: Cat. 1, Quick Hitch Compatible
Chip Capacity*: 3"
Upper Hitch Plate Thickness: 1/4"
Main Frame Thickness: 3/16"
Rotor Housing Thickness: 3/16"
Rotor Size: 17-1/2"
Rotor Speed: 1984 rpm
PTO Speed: 540 rpm
Driveline Category: Cat. 2
Main Drive Pulley Diameter: 16.35"
Rotor Pulley Diameter: 4-1/2"
Belts: 2 Single B Section
Belt Tensioner: Spring Loaded with Adjustment
Hopper Inlet Opening: 14" x 15"
Chipper Inlet Opening: 6" x 3"
Spout Discharge Opening: 3-1/4"
Cutting Knife: Reversible and Replaceable
Number of Knives: 2
Knife Size: 2-1/2" x 2" x 1/4"
Knife Material: Hardened Steel
Feed System: Self Feed
Feed Height Above Ground: 35" (No Skids)
Chip Chute Position: 270 Degrees
Adjustable Support Stands

* Min. 25 HP for Maximum Capacity

MODEL NUMBER	DESCRIPTION	APPROX. MACHINE WEIGHT	SHIPPING WEIGHT	LIST PRICE
WC1503	**15 SERIES WOOD CHIPPER - 3" Capacity**	369#	395#	$ 2,896

ADD OPTION NO.	COLOR OPTION
-81	Green
-82	Orange

Freight Chart

United States

	IMPLEMENTS* & ZERO TURNS*		DRILLS**
	LP TRUCK	LTL	
Alabama	20	25	638
Arizona	25	30	743
Arkansas	18	22	355
California	27	32	1,034
Colorado - East of I-25	18	23	350
Colorado - West of I-25	24	29	423
Connecticut	27	32	965
Delaware	25	29	973
Florida	27	32	935
Florida Panhandle	24	29	788
Georgia	24	29	764
Idaho	25	30	973
Illinois	18	22	350
Indiana	20	25	424
Iowa	18	22	350
Kansas	16	19	350
Kentucky	20	23	454
Louisiana	20	23	483
Maine	27	32	1,372
Maryland	24	29	784
Massachusetts	27	32	1,097
Michigan	20	25	619
Minnesota	20	25	470
Mississippi	20	25	499
Missouri	18	22	350
Montana	25	34	810
North Carolina	24	27	793
North Dakota	25	30	521
Nebraska	18	22	350
Nevada	27	30	869
New Hampshire	27	32	1,108
New Jersey	25	34	856
New Mexico	24	29	379
New York	25	30	970
Ohio	20	25	528
Oklahoma	18	22	350
Oregon	27	32	1,143
Pennsylvania	24	29	804
Rhode Island	27	36	1,097
South Carolina	24	27	779
South Dakota	20	25	379
Tennessee	20	23	461
Texas	20	23	423
Utah	25	28	598
Vermont	27	32	1,162
Virginia	24	29	769
W. Virginia	24	29	639
Washington	27	32	1,102
Wisconsin	20	25	513
Wyoming	24	29	460

**All Rates per 100 lbs. (CWT)*
*** Drills are Flat Rate*

Minimum charge of $90 applies to LTL shipments. For CPUs, specific product locations are noted in pricebooks.

ABILENE PLANT: 1100 NW 8TH, Abilene, KS 67410
(Implements, Zero Turns)

LUCAS PLANT: 240 S Greeley, Lucas, KS 67648
(Implements)

KIPP PLANT: 244 N Hugh, Kipp, KS 67401
(Implements)

SALINA PLANT: 601 Idlewilde, Salina, KS 67401
(Compact Drills)

LAND PRIDE LIST PRICING

3/19/2012

MODEL NO.	DESCRIPTION	OPTIONS	List
Zero Turn Mowers			
ZT3			
ZT360-02	Accu Z-ZT3 Series - 60" Deck	27 hp Kaw, Dlx seat/sp, ROPS	9,812
ZT360-03	Accu Z-ZT3 Series - 60" Deck	27 hp Kaw, Susp. ROPS	10,067
ZT372-02	Accu Z-ZT3 Series - 72" Deck	27 hp Kaw, Dlx seat/spr ROPS	10,526
ZT372-03	Accu Z-ZT3 Series - 72" Deck	27 hp Kaw, Susp. ROPS	10,781
ZST Residential Series			
ZST40-0118	ZST Series - 40" Deck	15 hp Kaw, Cushion seat, 2 Blade	4,279
ZST40-0117	ZST Series - 40" Deck	17.5 hp B&S, Cushion seat, 2 Blade	4,140
ZST48-0120	ZST Series - 48" Deck	18 hp Kaw, Cushion seat, 3 Blade	4,411
ZST48-0121	ZST Series - 48" Deck	21 hp B&S, Cushion seat, 3 Blade	4,289
		Accessory	-
		Accessory	-
Razors			
ZSR54-022491	Razor ZSR - 54" Deck	23 hp FS Kaw, Deluxe seat, ROPS	6,457
ZSR54-022591	Razor ZSR - 54" Deck	23.5 hp FX Kaw, Deluxe seat, ROPS	6,967
ZSR54-022691	Razor ZSR - 54" Deck	26 hp Briggs, deluxe seat, ROPS	6,355
ZSR60-022491	Razor ZSR - 60" Deck	23 hp FS Kaw, Deluxe seat, ROPS	6,661
ZSR60-022591	Razor ZSR - 60" Deck	23.5 hp FX Kaw, Deluxe seat, ROPS	7,171
ZSR60-022691	Razor ZSR - 60" Deck	26 hp Briggs, deluxe seat, ROPS	6,559
		Accessory	50
		Accessory	50
		Accessory	50

Sorry, but that page isn't available

Our apologies, but that page doesn't exist on our site.

Find a Dealer

Enter a ZIP:

Or city, state:

Type of Dealer:
- Tractor Implements
- Zero Turn Mowers
- Compact Drills

Upcoming Shows

Wisconsin Farm Technology Days

Dallas, WI
07/09/2013 to 07/11/2013

Penn State Ag Progress Days

Rock Springs, PA
08/13/2013 to 08/15/2013

Farm Progress Show

Decatur, IL
08/27/2013 to 08/29/2013

See all events

Land Pride
Division of Great Plains Manufacturing
1525 E. North Street
Salina, KS 67401

Land Pride is a division of Great Plains Manufacturing, Inc.
Copyright © 2013, Land Pride. All Rights Reserved.

GO TO INDEX

2013 Wholegoods Pricing

ZERO TURN MOWERS

Prices Effective March 19, 2012

Wholegoods: Ext. 1989, 1361, 1313, 1350
Parts & Service: Ext. 1992, 1333, 1364, 1365, 1362 & 1367
Service: Ext. 1994

P.O. Box 5060 • Salina, KS 67402-5060 • (888) 987-7433 • www.landpride.com

INDEX

RETURN TO INDEX

	Page	Factory Location
ZST Residential Series	3	Abilene
Z Razor® Residential Series	4	Abilene
ZSR Razor® Residential Series	5	Abilene
ZT3 AccuZ® Commercial Series	6	Abilene
Zero Turn Mower Accessories	7	Abilene
Features & Benefits	9	

ZST Residential Series

RETURN TO INDEX

3 YEAR Limited Warranty

Cutting Width: 40" or 48"
Cutting Height: 1" to 4.5" in 1/2" increments
Length: 74 1/4"
Overall Width with Discharge Chute Down:
40: 52 1/2"; 48: 65 1/2"
Tire to Tire Width: 38 1/2"
Deck Thickness: 11 Gauge with 11 ga. Doubler Plate
Steering: Twin Lever
Trim Capacity: 40: 1 1/2", 48: 5 1/2"
Anti-Scalp Rollers: 40: 1, 48: 2
Blades: Heat Treated, Medium Lift, Fusion® edge
Blade Tip Speed: 40: 18,700 fpm; 48: 18,300 fpm
Blade Belt: Single V-Belt
Blade Spindles: 1 3/8" Cast Iron Housing,
Greaseable Ball Bearings
Front Tires: 11 x 4 - 5, Rib Tread, Roller Bearings
Rear Drive Tires: 18 x 7.5 - 8, Turf Tread
Engine: Cylinders: Kawasaki-2, Briggs-1
Cooling: Air Cooled
Ignition: Electronic
Hourmeter
Fuel: Unleaded Gasoline
Fuel Capacity: 3 U.S. Gallons
Drive System: Dual Integrated Hydrostatic Transaxle
Drive: V-Belt from Engine Crankshaft
Parking Brake: Manually Activated
Ground Speed: Forward 0-6 mph; Reverse 0-4 mph
Cushion Seat
Cup Holders: 1

ALL MOWERS ARE RED IN COLOR

MODEL NUMBER	DESCRIPTION	APPROX. MACHINE WEIGHT	SHIPPING WEIGHT	LIST PRICE
ZST40-0118	**ZST RESIDENTIAL SERIES, 40" Deck** 15 HP Kawasaki Engine, Cushion Seat 2 Blade Deck Design	581#	889#	$ 4,279
ZST40-0117	**ZST RESIDENTIAL SERIES, 40" Deck** 17.5 HP Briggs & Stratton Engine, Cushion Seat 2 Blade Deck Design	566#	874#	$ 4,140
ZST48-0120	**ZST RESIDENTIAL SERIES, 48" Deck** 18 HP Kawasaki Engine, Cushion Seat 3 Blade Deck Design	596#	904#	$ 4,411
ZST48-0121	**ZST RESIDENTIAL SERIES, 48" Deck** 21 HP Briggs & Stratton Engine, Cushion Seat 3 Blade Deck Design	586#	894#	$ 4,289
ADD OPTION NO	**YOU MAY CHOOSE A REAR BUMPER**			
-80	**Rear Bumper**	8#	8#	$ 40
	***MULCHING & BAFFLE KIT**			
357-461A	40" Baffle Kit			$ 139
890-702C	40" Mulching Blade - each (2 required)			$ 30
357-484A	48" Baffle Kit			$ 139
890-700C	48" Mulching Blade - each (3 required)			$ 30

*Parts Discounts only, Order from our Parts Dept.

See Page 7 for Accessories

Rear & Side baggers are available through Humboldt Specialty Mfg. Co. 800-488-2009

Z Razor® Residential Series

RETURN TO INDEX

ALL MOWERS ARE RED IN COLOR

Cutting Width: 48" or 54"
Cutting Height: 1 1/2" to 4.5" in 1/4" increments
Length: 74 3/4"
Overall Width with Discharge Chute Down:
48: 62"; 54: 67"
Tire to Tire Width: 43"
Deck Thickness: 10 Gauge with 11 ga. Doubler Plate
Steering: Twin Lever
Trim Capacity: 48: 2 1/2", 54: 5 1/2"
Anti-Scalp Rollers: 4
Blades: Heat Treated, Medium Lift, Fusion® edge
Blade Tip Speed: 48: 18,300 fpm; 54: 18,515 fpm
Blade Belt: Single V-Belt
Blade Spindles: 1 3/8" Cast Iron Housing,
Greaseable Ball Bearings
Front Tires: 11 x 4 - 5, Rib Tread, Roller Bearings
Rear Drive Tires: 18 x 8.5 - 8, Turf Tread
Engine: Cylinders: 2
Cooling: Air Cooled
Ignition: Electronic
Hourmeter
Fuel: Unleaded Gasoline
Fuel Capacity: 12 U.S. Gallons
Drive System: Dual Hydrostatic
Drive: V-Belt from Engine Crankshaft
Parking Brake: Manually Activated
Ground Speed: Forward 0-6.5 mph; Reverse 0-4.5 mph
Seat: Deluxe Cushion Seat with Armrests
Cup Holders: 2
Certified Folding ROPS
Seat Belt

MODEL NUMBER	DESCRIPTION	APPROX. MACHINE WEIGHT	SHIPPING WEIGHT	LIST PRICE
Z48-022091	**ACCU-Z RAZOR SERIES, 48" Deck** 18.5 HP Kawasaki Engine, Deluxe Seat, Folding ROPS	867#	1,187#	$ 6,035
Z48-022291	**ACCU-Z RAZOR SERIES, 48" Deck** 22 HP Briggs & Stratton Engine, Deluxe Seat, Folding ROPS	867#	1,187#	$ 5,882
Z54-022491	**ACCU-Z RAZOR SERIES, 54" Deck** 23 HP Kawasaki Engine, Deluxe Seat, Folding ROPS	892#	1,212#	$ 6,239
Z54-022691	**ACCU-Z RAZOR SERIES, 54" Deck** 26 HP Briggs & Stratton Engine, Deluxe Seat, Folding ROPS	892#	1,212#	$ 6,137
	***MULCHING & BAFFLE KIT**			
357-364A	48" Baffle Kit - Z model only			$ 220
890-700C	48" Mulching Blade - each			$ 30
357-361A	54" Baffle Kit - Z model only			$ 220
890-991C	54" Mulching Blade - each			$ 30

*Parts Discounts only, Order from our Parts Dept.

See Page 7 for Accessories

Rear & Side baggers are available through Humboldt Specialty Mfg. Co. 800-488-2009

ZSR Razor® Residential Series

RETURN TO INDEX

ALL MOWERS ARE RED IN COLOR

Cutting Width: 54" or 60"
Cutting Height: 1 1/2" to 4.5" in 1/4" increments
Pivoting Front Axle: Locked or Unlocked
Trim Capacity: 54: 3", 60: 6"
Length: 78 1/4"
Overall Width with Discharge Chute Down:
54: 67"; 60: 73 3/4"
Tire to Tire Width: 48"
Deck Thickness: 10 Gauge with 11 ga. Doubler Plate
Steering: Twin Lever
Anti-Scalp Rollers: 4
Blades: Heat Treated, High Lift, Fusion® edge
Blade Tip Speed: 54: 18,515 fpm; 60: 18,700 fpm
Blade Belt: Single V-Belt
Blade Spindles: 1 3/8" Cast Iron Housing,
Greaseable Ball Bearings
Front Tires: 13x5-6, Rib Tread
Rear Drive Tires: 20x10-10, Turf Tread
Engine: Cylinders: 2
Cooling: Air Cooled
Ignition: Electronic
Hourmeter
Fuel: Unleaded Gasoline
Fuel Capacity: 12 U.S. Gallons
Drive System: Dual Hydrostatic
Drive: V-Belt from Engine Crankshaft
Parking Brake: Manually Activated
Ground Speed: Forward 0-7 mph; Reverse 0-4.5 mph
Seat: Deluxe Cushion Seat with Armrests
Cup Holders: 2
Certified Folding ROPS
Seat Belt

MODEL NUMBER	DESCRIPTION	APPROX. MACHINE WEIGHT	SHIPPING WEIGHT	LIST PRICE
ZSR54-022491	**ZSR RAZOR SERIES, 54" Deck** 23 HP Kawasaki FS Engine, Deluxe Seat, Folding ROPS	947#	1,267#	$ 6,457
ZSR54-022591	**ZSR RAZOR SERIES, 54" Deck** 23.5 HP Kawasaki FX Engine w/Oil Cooler & High Capacity Fuel Pump, Deluxe Seat, Folding ROPS	947#	1,267#	$ 6,967
ZSR54-022691	**ZSR RAZOR SERIES, 54" Deck** 26 HP Briggs & Stratton Engine, Deluxe Seat, Folding ROPS	947#	1,267#	$ 6,355
ZSR60-022491	**ZSR RAZOR SERIES, 60" Deck** 23 HP Kawasaki FS Engine, Deluxe Seat, Folding ROPS	972#	1,292#	$ 6,661
ZSR60-022591	**ZSR RAZOR SERIES, 60" Deck** 23.5 HP Kawasaki FX Engine w/Oil Cooler, Metal Fan, Canister Filter & HD Starter, Deluxe Seat, Folding ROPS	972#	1,292#	$ 7,171
ZSR60-022691	**ZSR RAZOR SERIES, 60" Deck** 26 HP Briggs & Stratton Engine, Deluxe Seat, Folding ROPS	972#	1,292#	$ 6,559

	***MULCHING & BAFFLE KIT**	
357-361A	54" Baffle Kit	$ 220
890-991C	54" Mulching Blade - each	$ 30
357-358A	60" Baffle Kit	$ 220
890-702C	60" Mulching Blade - each	$ 30

*Parts Discounts only, order from our Parts Dept.

See Page 7 for Accessories

Rear & Side baggers are available through Humboldt Specialty Mfg. Co. 800-488-2009

ZT3 AccuZ® Commercial Series

RETURN TO INDEX

Cutting Width: 60" or 72"
Cutting Height: 1"-5" in 1/4" increments
Length: 76"
Overall Width: 75" or 82 1/2"
Deck Thickness: 3/16"
Steering: Twin Lever
Anti-Scalp Rollers: 4
Blades: Heat Treated, High Lift, Fusion® edge
60": 1/4" x 2 3/4" x 21"; 72": 1/4" x 3" x 24"

Front Wheel Spindles: Tele-caster®
Pivoting Front Axle: Locked or Unlocked
Blade Tip Speed: 60": 18,000 fpm; 72": 18,450 fpm
Blade Belt: Single V-Belt
Blade Spindles: 1 3/8" Stressproof® Shaft, Cast Iron Housing, Greasable Ball Bearings
Front Tires: 13 x 6.50 - 6, Rib Tread
Rear Tires: 24 x 12.00 - 12, Turf Tread
Engine: Kawasaki, 27 HP
Cylinders: 2
Air Cooled, Commercial Air Filter
Hour Meter
Ignition: Electric
Fuel: Unleaded Gasoline
Fuel Capacity: 12 U.S. Gallons
Drive System: Integrated Pump & Wheel Motor, 1 Per Wheel, High-Torque Direct Drive
Parking Brake: Internal Wet Disk, Manually Activated
Ground Speed:
Forward 0-12 mph
Reverse 0-6 mph
Seat: Two Choices
Cup Holders: 2
Certified ROPS Standard
Seat Belt
Rear Bumper Tow Hook

ALL MOWERS ARE RED IN COLOR
Patent No. 8,167,324

MODEL NUMBER	DESCRIPTION	APPROX. MACH WEIGHT	SHIPPING WEIGHT	LIST PRICE
ZT360-02	**ACCU-Z Zero-Turning Radius Mower with 60" Deck** 27 HP Kawasaki Air Cooled Engine, Folding ROPS Deluxe Cushion Seat with Armrests and Springs	1,400#	1,670#	$ 9,812
ZT372-02	**ACCU-Z Zero-Turning Radius Mower with 72" Deck** 27 HP Kawasaki Air Cooled Engine, Folding ROPS Deluxe Cushion Seat with Armrests and Springs	1,450#	1,810#	$ 10,526
ADD OPTION NO	**YOU MAY CHOOSE AN ALTERNATE SEAT**			
-03	Molded Vinyl Seat with Comfort Suspension Adjustment (Delete Option -02, Add -03)	35#	35#	$ 255

See Page 6 for Accessories

Zero Turn Mower Accessories

RETURN TO INDEX

PART NUMBER	DESCRIPTION		LIST PRICE
	ACCESSORIES available through the Parts Department		
890-991C	ZXT54 Mulching Blades *(3 required)*		$ 30
357-278A	ZXT54 Baffle Kit (*S/N 664616 and below)*		$ 175
357-361A	ZXT54 Baffle Kit (*S/N 664617 and above)*		$ 175
357-358A	ZXT60 Baffle Kit (*S/N 664617 and above)*		$ 185
890-702C	ZXT60, ZT60, ZT60i, ZT3 - Mulching Blades *(3 required)*		$ 30
357-130A	ZXT60 & ZT60 - Baffle Kit (*S/N 505070 and below)*		$ 185
357-135A	ZXT60 & ZT60 - Baffle Kit (*S/N 505071 and above)*		$ 185
357-358A	ZT60i - Baffle Kit *(S/N 748109 and below)*		$ 185
357-573A	ZT60i & ZT3 *(S/N 748110 and above)*		$ 185
890-698C	ZT72, ZT72i & ZT3 - Mulching Blades *(3 required)*		$ 30
357-131A	ZT72 - Baffle Kit (*S/N 510757 and below)*		$ 195
357-136A	ZT72 - Baffle Kit (*S/N 510758 and above)*		$ 195
357-403A	ZT72i - Baffle Kit *(S/N 748109 and below)*		$ 195
357-577A	ZT72i & ZT3 *(S/N 748110 and above)*		$ 195
357-160A	Z Mower Light Kit - For ZT, ZTi, ZXT, ZSR & Z Model Razors		$ 120
357-194A	Soft Top Canopy - Must have ROPS for mounting		$ 199
357-279A	Striping Kit - ZXT54 & 60	28#	$ 254
357-639A	ZT3 - Safety Light and Sign Kit		$ 225
357-371A	Electric Deck Lift - Razor Z and ZSR (Z48, Z54, ZSR54, ZSR60)		$ 423
357-275A	Electric Deck Lift - ZT		$ 509
357-209A	Lift Jack - Lifts front of mower for easy servicing - ZT, ZXT & ZT3 Series Only		$ 97
	FRONT SNOW BLADES		
	Moldboard		
357-243A	60" Wide Blade - Anodized Aluminum, Solid Rubber Edge		$ 866
357-244A	72" Wide Blade - Anodized Aluminum, Solid Rubber Edge		$ 1,019
	Mounting Kit		
357-245A	Razor Snow Blade Mounting Kit		$ 152
357-246A	Accu-Z - ZT60 & ZT60i Snow Blade Mounting Kit		$ 152
357-247A	Accu-Z - ZT72, ZT72i & ZXT Pro Snow Blade Mounting Kit		$ 152
	ROPS		
357-346A	Folding ROPS and Seat Belt Kit - Z48, Z54, ZSR Series	57#	$ 652
357-273A	Folding ROPS and Seat Belt Kit - ZXT Series	57#	$ 856
357-146A	Folding ROPS and Seat Belt Kit - ZT, ZTi Series	75#	$ 881
357-145A	Fixed ROPS and Seat Belt Kit - ZT, ZTi Series	50#	$ 818

Zero Turn Collection Systems are available through Humboldt Specialty Mfg. Co. 800-488-2009.

ZXT Pro Striping Kit

END OF ZERO TURN SECTION

Zero Turn Mowers

ZST40 & ZST48 Models

Features	Benefits
40" & 48" Cutting widths	Sized right and priced right for residential owners.
1" to 4 1/2" Cutting height	Provides a good range of cutting heights in 1/2" increments for any type of turf grass.
Narrow drive tire stance	Provides good maneuverability. Allows for tight turns, yet gives a very stable platform over uneven ground.
High ground speed	Can mow a lot of grass in a short time. 6 MPH forward and 4 MPH reverse
Adjustable steering levers with comfort grip handles	Wide range of adjustments to accommodate almost any size of operator. Grips are designed for operator comfort and sustained productivity.
Frame design	Square tubing welded for increased durability.
Single welded 11 gauge deck with reinforced leading edge	Makes a stronger deck and reduces unwanted flex.
Rapid deck height adjustment	The foot operated deck lift and deck stop pin locator makes for a quick and easy precise cutting height adjustments.
Easy clean-out deck top	Deck allows air & debris to move across its top for improved belt cooling and easy clean out.
Mid-mount deck design	Puts deck closer to operator's line of sight for more efficient and precise operation.
Floating deck design	Provides good flotation over uneven terrain.
Anti-scalp roller(s)	Keeps scalping to a minimum.
Hydro-Gear Zero-Turn Transaxle drive unit on each rear wheel	Each rear wheel has an integrated hydrostatic transaxle containing a pump with fan for cooling and drive motor. These units are self contained and maintenance free.
4-Bolt, 18 x 7.5 - 8 rear turf tread tires	Offers excellent ground flotation and gentle on turf grasses.
11 x 4-5 front ribbed tires mounted in heavy duty pivoting caster forks	Provide for a quick and durable turning response.
Electric clutch control	Provides an easy smooth engagement of the mower blade drive system.
Single Kevlar drive belts	Drive belts made with Kevlar™ fiber provide long belt life. One hydrostatic pump drive belt and one deck drive belt is easier to maintain and not as expensive as multiple belt designs.
1 3/8" blade spindles mounted in ductile iron housings	Blade spindles and spindle housings are designed to handle heavy shock loads.
Accessible blade spindle zerks	Makes greasing the blade spindles easy.
Heavy duty heat treated Fusion® medium lift blades	Made from highest quality 1/4" thick fusion treated steel for high wear and increase blade life.
High blade tip speed	Provides a clean quality cut. (18,300 fpm and higher)
Choice of engines	Proven Kawasaki or premium Briggs Intek Series engines meets customer preferences with power and performance to spare.
Electric start with choke control	Keyed ignition and manual choke control are placed for one-handed starting convenience.
Engine oriented for easy access	Oil dipstick, oil drain ports, air filter, oil filter, spark plugs, choke and throttle can be serviced from the rear verses the side.
Center mounted rear engine	Provides maximum mower stability, easy service access, increased leg room, and increased air flow around engine fins to extend engine life.
Internal air filter cartridge	Easy to access.
Isolated exhaust muffler **Kawasaki** **Briggs & Stratton**	 Muffler is hidden and tucked down under to reduce noise and provide protection against burns. Muffler is mounted to the engine and guarded to provide protection against burns.
Ergonomically designed control console	Instrumentation and console controls are positioned for easy visual and fingertip access.

Zero Turn Mowers

Z48, Z54, ZSR54 & ZSR60 Models

Features	Benefits
48", 54" & 60" Cutting widths	Sized right and priced right for residential owners.
1 1/2" to 4 1/2" Cutting height	Provides a good range of cutting heights in 1/4' increments for any type of turf grass.
Narrow drive tire stance	Provides good maneuverability. Allows for tight turns, yet gives a very stable platform over uneven ground.
High ground speed **Z Models** **ZSR Models**	Can mow a lot of grass in a short time. 6.5 mph forward and 4.5 mph reverse 7.2 mph forward and 4.5 mph reverse
Adjustable steering levers with comfort grip handles	Wide range of adjustments to accommodate almost any size of operator. Grips are designed for operator comfort and sustained productivity.
Stronger clean frame design	Integral frame and hydraulic reservoir construction reduces component clutter under the seat for easy cleanout and service access.
Single welded 10 gauge deck frame with reinforced edges	Makes a stronger deck and reduces unwanted flex.
Rapid deck height adjustment	The foot operated with spring assist deck lift and deck stop locator makes for a quick and easy precise cutting height adjustments.
Easy clean-out deck top	Deck allows air and debris move across the top for improved belt cooling and easy clean out.
Mid-mount deck design	Puts deck closer to operator's line of sight for more efficient and precise operation.
Floating deck design	Chain suspension design provides excellent flotation over uneven terrain.
Four anti-scalp rollers	Two located on deck ends and two located toward mid-decks keeps scalping to a minimum.
Hydro-Gear Zero-Turn Transaxle drive unit on each rear wheel	Each rear wheel has an integrated hydrostatic transaxle containing a pump with fan for cooling and drive motor. These units are self contained and maintenance free except for changing hydraulic filters.
ZT-3100™ Transaxles in the ZSR Models incorporate steel cut gears	Steel cut gears out perform powder metal gears in an abusive environment making steel cut gears cost affordable for high end users.
Wide rear turf tread tires	Offers excellent ground flotation and gentle on turf grasses. (Z Models: 4-bolt, 18 x 8.5 - 8 tires & ZSR Models: 5-bolt, 20 x 10 -10 tires)
Front ribbed tires mounted in heavy duty pivoting caster forks	Provide for a quick and durable turning response. (Z Models: 11 x 4-5 & ZSR Models: 13 x 5 -6)
(ZSR Models only) **Lockable floating front axle**	Floating front axle provides for smoother ride, more uniform cut, and optimal traction capability by keeping all tires equally in contact with the ground over uneven terrain. Axle lock provides for temporary curb or edge cutting without grounding or hanging up the deck.
Electric clutch control	Provides an easy smooth engagement of the mower blade drive system.
Single Kevlar drive belts	Drive belts made with Kevlar™ fiber provide long belt life. One hydrostatic pump drive belt and one deck drive belt is easier to maintain and not as expensive as multiple belt designs.
1 3/8" blade spindles mounted in ductile iron housings	Blade spindles and spindle housings are designed to handle heavy shock loads.
Accessible blade spindle zerks	Makes greasing the blade spindles easy.
Heavy duty heat treated Fusion® high lift blades	Made from highest quality .25" thick fusion treated steel for high wear and increase blade life. High lift design stands grass up before cutting.
High blade tip speed	Provides a clean quality cut. (18,300 fpm and higher)
Choice of engines	Proven Kawasaki or premium Briggs Intek Series engines meets customer preferences with power and performance to spare.
Electric start with choke control	Keyed ignition and manual choke control are placed for one-handed starting convenience.
Engine oriented for easy access	Oil dipstick, oil drain ports, air filter, oil filter, spark plugs, choke and throttle can be serviced from the rear verses the side.
Center mounted rear engine	Provides maximum mower stability, easy service access, increased leg room, and increased air flow around engine fins to extend engine life.

Designs, specifications, features and information are subject to change without notice.

Zero Turn Mowers

Z48, Z54, ZSR54 & ZSR60 Models

Engine air filtration	The Briggs & Stratton and smaller Kawasaki engines are provided with an internal proven 2-stage quick access filter cartridge. The Kawasaki engine is provided with a remote air intake that filters out 95 percent of airborne particles.
Isolated exhaust muffler	Muffler is hidden and tucked down under to reduce noise and provide protection against burns.
Ergonomically designed control console	Instrumentation and console controls are positioned for easy visual and fingertip access.
Hour meter	Measure actual engine run time to monitor service intervals.
Sleek styling twin six gallon fuel tanks with extra large fuel caps	12 Gallon fuel capacity for plenty of operating range and decreased down time. Extra large fuel openings for easy fueling. Fuel caps are placed inboard and center mounted to protect caps from damage and prevent overflow spills on inclines.
Fuel selector/shutoff valve	Provides on the go switching from one tank to another giving the operator time to finish the mowing job and to return to the refueling source before the mower stops running. Both tanks can be shutoff with this valve for servicing and storage.
Molded-in dual cup holders and storage compartments	Tanks are molded with cup holders that fit a wide variety of cups and are in easy access to the driver. A storage compartment molded next to the cups offer additional operator convenience.
Lever activated park brake	A manually activated over-center park brake lever located next to the operator's left side for easy activation and release of a spring applied pawl over cog brake in the transaxle. Mower will not move until brake is released.
Hinged seat platform	Provides easy service access to the compartment below the seat and is spring mounted for a smoother ride. Requires removal of only one bolt for quick access to components below.
Comfortable adjustable seat	Deluxe Cushion suspension with molded high back, adjustable arm rests and adjustable seat positioning for operator comfort and sustained productivity.
Seat safety interlocks	Rising off of the seat with blades engaged will cut engine power and stop blade rotation. Engine cannot be started with blade engagement switch in "on" position.
Bolted on floor platform	Provides service access to topside deck components. Requires removal of only 2 bolts for quick access.
Certified ROPS	Certified ROPS for added operator protection.
Electric deck lift option	Makes lifting and lowering the deck easier.
Sun canopy accessory	Makes mowing more comfortable on hot sunny days. Helps protects against harmful sun rays. Designed to fit the folding ROPS.
EPA Compliant Mowers	
EPA approved six gallon fuel tanks with sight gauge, extra large tethered fuel caps and vent valve	12 Gallon fuel capacity for plenty of operating range and decreased down time. Extra large fuel openings for easy fueling. Fuel caps are EPA approved, non vented, placed inboard and center mounted to protect caps from damage and prevent overflow spills on inclines. EPA vent valve help stops fuel leaks in rollover accidents and sight gauge makes it easy to see low fuel level in tanks.
Fuel tanks are vented to the engine carburetor	Engine burns fuel vapors instead of vapors leaking into the atmosphere.

Designs, specifications, features and information are subject to change without notice.

Zero Turn Mowers

ZT360 & ZT372 Models

Features	Benefits
Cutting width of 60" or 72"	Sized right and priced right for ranch, estate owners, and commercial operators.
Cutting height of 1" to 5"	Provides a good range of cutting heights in 1/4" increments for any type of turf grass.
51 3/4" Outside drive tire stance	Provides excellent stability over uneven and hilly ground along with good maneuverability.
High ground speed	Forward 12 mph and reverse 6 mph for high productivity.
Adjustable steering levers with comfort grip handles	Wide range of adjustments to accommodate almost any size of operator. Grips are designed for operator comfort and sustained productivity.
Spring suspension seat platform	Helps smooth out the ride.
Strong deck design	New manufactured deck design has a great appearance on the outside, but tough parts on the inside. 3/16" Deck with 1/4" doubler plate, and a reinforced front edge.
Rapid deck height adjustment	The foot operated with spring assist deck lift and deck stop locator make for quick and easy precise cutting height adjustments.
Easy clean-out deck top	Deck allows air & debris to move across the top for improved belt cooling & easy clean out.
Snap-on deck belt guards	Deck belt guards can be hand removed easily without tools.
Excellent trim capability	Provides for good trim capability.
Mid-mount deck design	Puts deck closer to the operator's line of sight for more efficient and precise operation.
Floating deck design	Chain suspension design provides excellent flotation over uneven terrain.
Four anti-scalp rollers	Two located on deck ends and two located toward mid-deck keeps scalping to a minimum.
Completely independent twin hydrostatic drives	Separate expansion tanks eliminate the possibility of cross contamination.
Premium wide stance drive tires	Provide excellent traction, outstanding side-hill stability and a smooth ride.
Ribbed front tires mounted in heavy duty pivoting caster forks	Provide for a quick and reliable turning response.
Tele-Caster® wheel spindles	Spring loaded caster wheel spindles for superior shock absorption over rough terrain.
Lockable floating front axle	Floating front axle provides for smoother ride and optimal traction capability by keeping all tires equally in contact with the ground over uneven terrain. Locking front axle provides for a more uniform cut and curb or edge cutting without grounding or hanging up the deck.
Electric clutch control	Provides an easy smooth engagement of the mower blade drive system.
Kevlar drive belts	Drive belts made with Kevlar™ fiber provide long belt life. One hydrostatic pump drive belt and one deck drive belt.
1" blade spindles mounted in ductile iron housings	Additional 3/16" plate steel is added to the deck connecting the blade spindle housing mounts. Blade spindles, spindle housings and mounts are designed to handle heavy shock loads.
Accessible blade spindle zerks	Makes greasing the blade spindles easy.
Heavy duty heat treated Fusion® high lift blades	Made from highest quality .25" thick fusion treated steel for high wear and increase blade life. High lift design stands grass up before cutting.
High blade tip speed	Provides a clean quality cut. See specifications for actual speeds.
Battery located under the seat	Easy access to battery for servicing and maintaining.
Kawasaki engine	Proven engine to meet customer preferences with power and performance to spare.
Electric start with choke control	Keyed ignition and manual choke control are placed for one-handed starting convenience.
Engine oriented for easy access	Spark plugs, air filter, oil filter, & oil drain are placed easily within reach.
Center Mounted Rear Engine	Provides maximum mower stability, easy service access, increased leg room, and increased air flow around engine fins to extend engine life.
Remote Air Intake	All engines come standard with cyclonic type remote air intake to keep engines running clean and running longer.
Engine oil cooler	Keeps engine running at peak performance in warm weather conditions.
Isolated exhaust muffler	Muffler is hidden and tucked down under to reduce noise and provide protection against burns.

Zero Turn Mowers

ZT360 & ZT372 Models

Ergonomically designed control console	Instrumentation and console controls are positioned for easy visual or fingertip access.
Hour meter	Measure actual engine run time to monitor service intervals.
Sleek styling EPA approved twin six gallon fuel tanks with sight gauge, extra large tethered fuel caps and vent valve	12 Gallon fuel capacity for plenty of operating range and decreased downtime. Extra large fuel openings for easy fueling. Fuel caps are EPA approved, non vented, placed inboard and center mounted to protect caps from damage and prevent overflow spills on inclines. EPA vent valve helps stop fuel leaks in rollover accidents and sight gauge makes it easy to see low fuel level in tanks.
Fuel tanks are vented to the engine carburetor	Engine burns fuel vapors instead of vapors leaking into the atmosphere.
Fuel selector/shutoff valve	Provides on-the-go switching from one tank to another giving the operator time to finish the mowing job and to return to the refueling source before the mower stops running. Both tanks can be shutoff with this valve for servicing and storage.
Molded-in dual cup holders and storage compartments	Tanks are molded with cup holders that fit a wide variety of cups and are in easy access to the driver. A storage compartment molded next to the cups offer additional operator convenience.
Lever activated park brake	A manually activated over-center park brake lever located next to the operator's left side for easy activation and release of internal wet disk brakes. Mower will not move until brake is released.
Hinged seat platform	Tilts up for easy access to battery and drive components.
Comfortable adjustable seat	Deluxe Cushion or Molded Vinyl with suspension and adjustable positioning for operator comfort and sustained productivity.
Seat safety interlocks	Rising off of the seat with blades engaged will cut engine power and stop blade rotation. Engine cannot be started with blade engagement switch in "on" position.
Hinged floor pan	Provides quick and convenient service access to topside deck components without tools.
Certified ROPS	Certified ROPS for added operator protection.

P.O. Box 5060 • Salina, KS 67402-5060
(888) 987-7433 • www.landpride.com

NOTE: Where minimum engine horsepower and/or PTO horsepower is required for a specification item, the actual horsepower may vary below minimum specification by no greater than 10 percent.

---------- CATEGORY 1: Heavy Duty Equipment ----------

CATEGORY 1: Heavy Duty Equipment - Compact Tracked Loader

ITEM 1.

All compact track drive loader equipment offered as an equivalent shall meet or exceed the following minimum requirements:

- Diesel engine, minimum 80 horsepower:
- Rated operating capacity 2,500 pounds, minimum
- Rated operating capacity at 50% of tipping load 3,600 pounds, minimum
- Tipping load 7,300 pounds, minimum
- Automatic bucket leveling
- Reinforced rubber tracks
- Manufacturer standard bucket

CATEGORY 1: Heavy Duty Equipment - Compact Wheel Drive Skid Steer Loader

ITEM 2.

All compact wheel drive skid-steer loader equipment offered as an equivalent shall meet or exceed the following minimum requirements:

- Diesel engine, minimum 70 horsepower:
- Rated operating capacity 2,200 pounds, minimum
- Tipping load 4,300 pounds, minimum
- Automatic bucket leveling
- Manufacturer standard bucket

CATEGORY 1: Heavy Duty Equipment - Backhoe Loader

ITEM 3.

All backhoe loader equipment offered as an equivalent shall meet or exceed the following minimum requirements:

- Diesel engine, minimum 90 horsepower,
- 174” (14’ 6”) minimum backhoe standard dig depth
- 7,000 lbs. minimum loader bucket lift to full height
- ROPS operator cab
- Four wheel drive

---------- CATEGORY 2: Tractors ----------

CATEGORY 2: Extra Heavy Duty Tractor

ITEM 1.

All heavy duty tractor equipment offered as an equivalent shall meet or exceed the following minimum requirements:

- Diesel engine, minimum 130 horsepower:
- 540 RPM rear PTO, 115 horsepower minimum,
- 3-point hitch, 6,000 lbs minimum lift capacity at 24”
- MFWD front axle for on/off 4WD
- Fully enclosed cab

CATEGORY 2: Heavy Duty Tractor

ITEM 2.

All heavy duty tractor equipment offered as an equivalent shall meet or exceed the following minimum requirements:

- Diesel engine, minimum 90 horsepower,
- 540 RPM rear PTO, 75 horsepower minimum,
- 3-point hitch, 4,400 lbs minimum lift capacity at 24”
- Four wheel drive
- Enclosed cab

CATEGORY 2: Medium Duty Tractor

ITEM 3.

All medium duty tractor equipment offered as an equivalent shall meet or exceed the following minimum requirements:

- Diesel engine, minimum 60 horsepower,
- 540 RPM rear PTO, 50 horsepower minimum,
- 3-point hitch, 3,100 lbs minimum lift capacity at 24”
- Four wheel drive

CATEGORY 2: Compact Tractor

ITEM 4.

All compact tractor equipment offered as an equivalent shall meet or exceed the following minimum requirements:

- Diesel engine, minimum 30 horsepower,
- 540 RPM rear PTO, 20 horsepower minimum,
- 3-point hitch, 2,200 lbs minimum lift capacity at 24”
- Four wheel drive

CATEGORY 2: Sub-Compact Tractor

ITEM 5.

All sub-compact tractor equipment offered as an equivalent shall meet or exceed the following minimum requirements:

- Diesel engine, minimum 20 horsepower,
- 540 RPM rear PTO, 12 horsepower minimum,
- 3-point hitch, 650 lbs minimum lift capacity at 24”
- Four wheel drive or selectable two wheel drive / four wheel drive
-

-------- CATEGORY 3: Tractor Towed PTO Driven Equipment ---------

CATEGORY 3: Tractor Towed PTO Driven Mowers - Pull type gang mower, terrain following, on a tilting frame for transport, for heavy duty large area mowing on flat and uneven terrain:

ITEM 1.

All tractor towed PTO driven mowing equipment offered as an equivalent shall meet or exceed the following minimum requirements:

- Cutting width 20 feet
- (3) free floating mowing decks
- Drive line for tractor 3-point hitch and 540 RPM PTO
- 1” to 5” cutting height
- Rotary type cutting, (9) cutting blades
- 12” minimum diameter deck tires, pneumatic or semi-pneumatic
- Anti-scalping rollers or wheels

CATEGORY 3: Tractor Towed PTO Driven Mowers - Pull type gang mower, terrain following, on a tilting frame for transport, for general mowing on large areas, flat and uneven terrain, such as parks, golf courses, school yards, large recreation areas:

ITEM 2.

All tractor towed PTO driven mowing equipment offered as an equivalent shall meet or exceed the following minimum requirements:

- Cutting width of 15 feet
- (3) free floating mowing decks
- Drive line for tractor 3-point hitch and 540 RPM PTO
- 1” to 5” cutting height
- Rotary type cutting, (9) cutting blades
- 12” minimum diameter deck tires, pneumatic or semi-pneumatic
- Anti-scalping rollers or wheels

CATEGORY 3: Tractor Towed PTO Driven Mowers - Pull type gang mower, terrain following, on a tilting frame for transport, for finish mowing on medium area flat or uneven terrain:

ITEM 3.

All tractor towed PTO driven mowing equipment offered as an equivalent shall meet or exceed the following minimum requirements:

- Cutting width of 9 feet, minimum
- (5) free floating mowing decks
- Drive line for tractor 3-point hitch and 540 RPM PTO
- 1” to 3” cutting height
- (5) cutting blades
- 10” minimum diameter deck tires, pneumatic or semi-pneumatic
- Anti-scalping rollers or wheels

CATEGORY 3: Tractor Towed PTO Driven Mowers - Pull type gang mower, terrain following, on a tilting frame for transport, for finish mowing on medium to large area flat or uneven terrain:

ITEM 4.

All tractor towed PTO driven mowing equipment offered as an equivalent shall meet or exceed the following minimum requirements:

- Cutting width of 11 feet, minimum
- (3) free floating mowing decks
- Drive line for tractor 3-point hitch and 540 RPM PTO
- 1” to 5” cutting height
- (9) cutting blades
- 12” minimum diameter deck tires, pneumatic or semi-pneumatic
- Anti-scalping rollers or wheels

CATEGORY 3: Tractor Towed PTO Driven Mowers - Pull type multiple unit heavy duty flexible wing rotary cutter for wide area heavy duty brush cutting, land clearing, highway maintenance, heavy brush material up to 4” thick:

ITEM 5.

All tractor towed PTO driven rotary cutter equipment offered as an equivalent shall meet or exceed the following minimum requirements:

- Requires tractor PTO, 540 RPM
- Cutting width of 15 feet
- Heavy duty 10 gauge minimum thick steel decks, with ¼” thick skirt
- (2) hydraulic lift wing sections
- Connects available for tractor 3-point hitch or pull type hitch
- 2” to 16” cutting height
- 1/2” thick extra heavy duty steel rotary cutting blades
- Cuts material up to 4” thick
- Slip clutch drive line protection
- Front and rear discharge shields
- Rear caster wheel(s)

CATEGORY 3: Tractor Towed PTO Driven Mowers - Pull type single unit heavy duty single unit rotary cutter for heavy duty brush cutting, land clearing, highway maintenance, heavy brush material up to 4" thick:

ITEM 6.

All tractor towed PTO driven rotary cutter equipment offered as an equivalent shall meet or exceed the following minimum requirements:

- Requires tractor PTO, 540 RPM
- Cutting width of 6 feet, minimum
- Heavy duty 7 gauge minimum thick steel deck
- Connects available for tractor 3-point hitch or pull type hitch
- 2" to 9" cutting height
- ½" minimum thick extra heavy duty steel rotary cutting blades
- Cuts material up to 3" thick
- Slip clutch drive line protection
- Front discharge shields
- Rear caster wheel(s)

CATEGORY 3: Tractor Towed PTO Driven Mowers - pull type single unit mower, for finish mowing on medium to small areas such as parks, school lawns, sports fields, golf course:

ITEM 7.

All tractor towed PTO driven mowing equipment offered as an equivalent shall meet or exceed the following minimum requirements:

- Cutting width of 48 inches
- Drive line for tractor 3-point hitch and 540 RPM PTO
- 1" to 4" cutting height
- (3) rotary cutting blades
- 10" minimum diameter deck tires, pneumatic or solid
- Rear cuttings discharge

CATEGORY 3: Tractor Towed PTO Driven Mowers - Pull type single unit mower, for finish mowing on medium to large areas such as parks, school lawns, sports fields, golf course, including areas with uneven terrain:

ITEM 8

All tractor towed PTO driven mowing equipment offered as an equivalent shall meet or exceed the following minimum requirements:

- Cutting width of 84 inches
- Drive line for tractor 3-point hitch and 540 RPM PTO
- 1½" to 4" cutting height
- (3) rotary cutting blades
- 10" minimum diameter deck tires, pneumatic or solid
- Rear cuttings discharge

CATEGORY 3: Tractor Towed PTO Driven Mowers - Pull type single unit air tunnel grooming mower, for finish mowing on medium to large areas for moist, rugged, or tall grass:

ITEM 9.

All tractor towed PTO driven mowing equipment offered as an equivalent shall meet or exceed the following minimum requirements:

- Cutting width of 72 inches
- Drive line for tractor 3-point hitch and 540 RPM PTO
- 1” to 4” cutting height
- (3) rotary cutting blades, offset for overlap
- 10” diameter deck tires, pneumatic or solid
- Side or rear cuttings discharge, with air lifting of cuttings

---------- CATEGORY 4: Off Road Utility Vehicles ----------

CATEGORY 4: Off Road Utility Vehicles - Heavy Duty 4x4 Diesel Service Truck

ITEM 1:

All heavy duty off road service vehicle equipment offered as an equivalent shall meet or exceed the following minimum requirements:

- Diesel engine, minimum 20 horsepower,
- (2) occupants plus cargo
- Power dumping cargo bed
- 50” x 45” x 10” deep cargo bed
- 1,400 lbs minimum payload capacity
- 1,200 lbs minimum towing capacity
- Four wheel drive

CATEGORY 4: Off Road Utility Vehicles - Medium Duty 4x4 Diesel Service Truck

ITEM 2.

All medium duty off road service vehicle equipment offered as an equivalent shall meet or exceed the following minimum requirements:

- Diesel engine, minimum 18 horsepower,
- (2) occupants plus cargo
- 40” x 45” x 9” deep cargo bed
- Tilting dump bed with tailgate
- 1,200 lbs minimum payload capacity
- 1,000 lbs minimum towing capacity
- Four wheel drive

CATEGORY 4: Off Road Utility Vehicles - Medium Duty 4x4 Gasoline Service Truck

TEM 3.

All medium duty off road service vehicle equipment offered as an equivalent shall meet or exceed the following minimum requirements:

- Gasoline engine, minimum 18 horsepower,
- (2) occupants plus cargo
- 40” x 45” x 9” deep cargo bed
- 1,200 lbs minimum payload capacity
- 1,000 lbs minimum towing capacity
- Four wheel drive

CATEGORY 4: Off Road Utility Vehicles - Medium Duty 4x2 Gasoline Service Truck

ITEM 4.

All medium duty off road service vehicle equipment offered as an equivalent shall meet or exceed the following minimum requirements:

- Gasoline engine, minimum 14 horsepower,
- (2) occupants plus cargo
- 40” x 45” x 10” deep cargo bed
- Power tilting cargo bed
- 1,200 lbs minimum payload capacity
- 1,000 lbs minimum towing capacity
- Two wheel drive

CATEGORY 4: Off Road Utility Vehicles - Light Duty 4x2 Gasoline Service Truck

ITEM 5.

All light duty off road service vehicle equipment offered as an equivalent shall meet or exceed the following minimum requirements:

- Gasoline engine, minimum 10 horsepower,
- (2) occupants plus cargo
- 36” x 44” x 10” deep cargo bed
- 1,000 lbs minimum payload capacity
- 600 lbs bed load capacity
- Two wheel drive

CATEGORY 4: Off Road Utility Vehicles -Heavy Duty 4x2 Diesel Flatbed Truck

ITEM 6.

All heavy duty off road service vehicle equipment offered as an equivalent shall meet or exceed the following minimum requirements:

- Diesel engine, minimum 20 horsepower,
- (2) occupants plus cargo
- 63” x 46” x flatbed cargo bed
- Power tilting cargo bed
- 2,400 lbs minimum payload capacity
- 2,400 lbs minimum towing capacity
- Two wheel drive

CATEGORY 4: Off Road Utility Vehicles - Heavy Duty 4x2 Gasoline Flatbed Truck

ITEM 7.

All heavy duty off road service vehicle equipment offered as an equivalent shall meet or exceed the following minimum requirements:

- Gasoline engine, minimum 20 horsepower,
- (2) occupants plus cargo
- 63” x 46” x flatbed cargo bed
- Power tilting cargo bed
- 2,400 lbs minimum payload capacity
- 2,400 lbs minimum towing capacity
- Two wheel drive

CATEGORY 4: Off Road Utility Vehicles - Light Duty 4x2 Gasoline Flatbed Truck

ITEM 8.

All light duty off road service vehicle equipment offered as an equivalent shall meet or exceed the following minimum requirements:

- Gasoline engine, minimum 10 horsepower,
- (2) occupants plus cargo
- 44” x 48” x flatbed cargo bed
- 900 lbs minimum payload capacity
- 600 lbs bed load capacity
- Two wheel drive

---------- CATEGORY 5: Self Propelled Riding Mowers ----------

CATEGORY 5: Self Propelled Riding Mowers - Heavy duty wide coverage gang type rotary blades riding mower for large grass area mowing, and mowing of golf course rough turf:

ITEM 1.

All self propelled riding mowing equipment offered as an equivalent shall meet or exceed the following minimum requirements:

- 85 horsepower diesel engine, minimum,
- Cutting width of 16 feet
- (1) main deck and (2) wing decks
- 1” to 5” cutting height
- Hydraulic powered rotary cutting blades
- Hydrostatic all wheel drive
- Driver station with steering wheel and adjustable seat

CATEGORY 5: Self Propelled Riding Mowers - Medium duty wide coverage gang type rotary blade riding mower for large grass area mowing, mowing of golf course rough turf, and large grass sports fields:

ITEM 2.

All self propelled riding mowing equipment offered as an equivalent shall meet or exceed the following minimum requirements:

- 50 horsepower diesel engine, minimum,
- Cutting width of 10 feet
- (1) main deck and (2) wing decks
- 1” to 5” cutting height
- Hydraulic powered rotary cutting decks
- Full time all wheel drive
- Driver station with steering wheel and adjustable seat

CATEGORY 5: Self Propelled Riding Mowers - Medium duty wide coverage single deck type rotary blade riding mower for large grass area mowing, mowing of golf course rough turf, and large grass sports fields:

ITEM 3.

All self propelled riding mowing equipment offered as an equivalent shall meet or exceed the following minimum requirements:

- 50 horsepower diesel engine, minimum,
- Cutting width of 10 feet
- (1) main deck with swing-up side deck sections for (3) cut widths
- 1” to 5” cutting height
- Hydraulic powered rotary cutting blades
- Full time all wheel drive
- Driver station with steering wheel and adjustable seat

CATEGORY 5: Self Propelled Riding Mowers - Wide coverage gang reel type riding mower for large grass area medium finish mowing, and mowing of golf course fairway turf:

ITEM 4.

All self propelled riding mowing equipment offered as an equivalent shall meet or exceed the following minimum requirements:

- 30 horsepower diesel engine,
- Cutting width of 8 feet
- (5) reel mowing units
- 0.25” to 2” cutting height
- Hydraulic powered mowing reels
- Hydrostatic all wheel drive
- Driver station with steering wheel and adjustable seat

CATEGORY 5: Self Propelled Riding Mowers - Gang reel type riding mower for small to medium area finish mowing, and mowing of golf course rough, trim, and surrounds areas turf:

ITEM 5.

All self propelled riding mowing equipment offered as an equivalent shall meet or exceed the following minimum requirements:

- 18 horsepower diesel engine,
- Cutting width of 72 inches or 84 inches
- (3) reel mowing units
- 0.375” to 2” cutting height
- Hydraulic powered mowing reels
- Hydrostatic all wheel drive
- Driver station with steering wheel and adjustable seat

CATEGORY 5: Self Propelled Riding Mowers - Gang reel type riding mower for small to medium area very fine finish mowing, and mowing of golf course greens:

ITEM 6.

All self propelled riding mowing equipment offered as an equivalent shall meet or exceed the following minimum requirements:

- 16 horsepower diesel engine,
- Cutting width of 59 inches
- (3) reel mowing units
- 0.062” to 0.297” or .0.258” to 1” cutting heights
- Drive shaft powered mowing reels
- Hydrostatic all wheel drive
- Driver station with steering wheel and adjustable seat

CATEGORY 5: Self Propelled Riding Mowers - Zero turn type rotary blade riding mower for medium and large size area general mowing and lawn area maintenance:

ITEM 7.

All self propelled riding mowing equipment offered as an equivalent shall meet or exceed the following minimum requirements:

- 30 horsepower diesel engine,
- Cutting width of 72 inches
- (3) rotary mowing blades
- 1½" to 5" cutting height
- Drive shaft driven cutter deck
- Hydrostatic two wheel drive
- Driver station with adjustable seat or control arms

CATEGORY 5: Self Propelled Riding Mowers - Zero turn type rotary blade riding mower for medium size area general mowing:

ITEM 8.

All self propelled riding mowing equipment offered as an equivalent shall meet or exceed the following minimum requirements:

- 25 horsepower gasoline engine,
- Cutting width of 60 inches, minimum
- (3) rotary mowing blades
- 1½" to 5" cutting height
- Drive shaft driven cutter deck
- Two wheel drive
- Driver station with adjustable seat or control arms
- Anti-scalping wheels or rollers

CATEGORY 5: Self Propelled Riding Mowers:
Zero turn type rotary blade riding mower for small to medium size area general mowing and lawn area maintenance:

ITEM 9.

All self propelled riding mowing equipment offered as an equivalent shall meet or exceed the following minimum requirements:

- 20 horsepower gasoline engine,
- Cutting width of 50 inches, minimum
- (3) rotary mowing blades
- 1½" to 5" cutting height
- Belt driven cutter deck
- Two wheel drive
- Driver station with adjustable seat or control arms
- Anti-scalping wheels or rollers

CATEGORY 5: Self Propelled Riding Mowers -
Zero turn type rotary blade riding mower for small size area general mowing and lawn area maintenance:

ITEM 10.

All self propelled riding mowing equipment offered as an equivalent shall meet or exceed the following minimum requirements:

- 18 horsepower gasoline engine,
- Cutting width of 48 inches
- (2) rotary mowing blades
- 1½" to 4 ½"" cutting height
- Belt driven cutter deck
- Two wheel drive
- Driver station with adjustable seat or control arms
- Anti-scalping wheels or rollers

---------- CATEGORY 6: Walk-Behind Mowing Equipment ----------

CATEGORY 6: Walk-Behind Mowing Equipment - Walk-behind self propelled rotary blade mower for medium size area general mowing and lawn area maintenance:

ITEM 1.

All walk-behind mowing equipment offered as an equivalent shall meet or exceed the following minimum requirements:

- 14 horsepower gasoline engine,
- Cutting width of 48 inches, minimum
- (3) rotary mowing blades
- 1½" to 4" cutting height
- Belt driven cutter deck
- 5-speed transmission or hydrostatic to drive wheel
- Manual engine starting
- Handle mounted controls
- Anti-scalping wheels or rollers

CATEGORY 6: Walk-Behind Mowing Equipment: - Walk-behind self propelled rotary blade mower for small size area general mowing and lawn area maintenance:

ITEM 2.

All walk-behind mowing equipment offered as an equivalent shall meet or exceed the following minimum requirements:

- 5 horsepower gasoline engine,
- Cutting width of 21 inches
- (1) rotary mowing blade
- 1" to 3" cutting height
- Crankshaft driven cutter blade
- 3-speed transmission to drive wheel
- Rear discharge, with bag and mulch plug
- Handle mounted controls

CATEGORY 6: Walk-Behind Mowing Equipment - Walk-behind self propelled reel type mower for finish mowing of golf greens:

ITEM 3.

All walk-behind mowing equipment offered as an equivalent shall meet or exceed the following minimum requirements:

- 4 horsepower gasoline engine,
- Cutting width of 21 inches, minimum
- (1) 11-blade cutting reel
- 1/8" to 7/16" cutting height
- Belt or chain drive cutting reel
- Clutch engagement drive to drive wheel
- Handle mounted controls
- Grass basket

------CATEGORY 7: Turf Maintenance & Material Handling Equipment ---------

CATEGORY 7: Turf Maintenance Equipment - Tractor towed material handler and large area hydraulic driven top dresser for lawn area maintenance, material handling, and golf course sand trap maintenance:

ITEM 1.

All towed top dresser equipment offered as an equivalent shall meet or exceed the following minimum requirements:

- Minimum hopper capacity 4 cubic yards
- Adjustable spreading width of 9' to 35', minimum, with broadcast spinner attachment
- Towing tractor hydraulic system activates unit
- 30" wide conveyor belt
- Metering rear gate
- Swiveling cross conveyor attachment
- 11,500 pounds payload

CATEGORY 7: Turf Maintenance Equipment - Tractor towed large area hydraulic driven top dresser for lawn area maintenance:

ITEM 2.

All towed top dresser equipment offered as an equivalent shall meet or exceed the following minimum requirements:

- Minimum hopper capacity 2.5 cubic yards
- Spreading width of 72 inches
- Towing tractor hydraulic system activates unit
- 72" wide conveyor belt
- Metering rear gate
- Hydraulic driven finishing brush
- 11,000 pounds payload
- Option for tractor PTO drive

CATEGORY 7: Turf Maintenance Equipment: Ground driven top dresser for medium to large lawn area maintenance:

ITEM 3.

All ground driven top dresser equipment offered as an equivalent shall meet or exceed the following minimum requirements:

- Minimum hopper capacity 2 cubic yards
- Spreading width of 60 inches, minimum
- Ground drive wheels activate unit when towed
- 9" diameter brush
- 60" wide conveyor belt
- Metering rear gate
- Clutch for conveyor and brush drive
- 6,000 pounds payload

CATEGORY 7: Turf Maintenance Equipment: Ground driven top dresser for small to medium lawn area maintenance:

ITEM 4

All ground driven top dresser equipment offered as an equivalent shall meet or exceed the following minimum requirements:

- Minimum hopper capacity 25 cubic feet
- Spreading width of 60 inches
- Ground drive wheels activate unit when towed
- 9" diameter brush
- 60" wide conveyor belt
- Metering rear gate
- Clutch for conveyor and brush drive
- 2,000 pounds payload

CATEGORY 7: Turf Maintenance Equipment - Truck mounted broadcast spinner type top dresser for small to medium lawn area maintenance:

ITEM 5.

All truck mounted top dresser equipment offered as an equivalent shall meet or exceed the following minimum requirements:

- Minimum hopper capacity 18 cubic feet
- Spreading width of 15' to 30' with broadcast spinner
- Mounts on off road service vehicle with flatbed
- Uses carry vehicle hydraulic system for activation
- 18" wide conveyor belt
- Metering rear gate
- 1/32 inch to 1/4 inch spread depth

CATEGORY 7: Turf Maintenance Equipment - Truck mounted drop type top dresser for small lawn area maintenance:

ITEM 6.

All truck mounted top dresser equipment offered as an equivalent shall meet or exceed the following minimum requirements:

- Minimum hopper capacity 18 cubic feet
- Spread width of 60"
- Mounts on off road service vehicle with flatbed
- Uses carry vehicle hydraulic system for activation
- 60" wide conveyor belt
- Metering rear gate
- Variable application rate

---------- CATEGORY 8: Recreation Area Equipment ----------

CATEGORY 8: Recreation area Equipment - Self propelled riding ball field and golf course bunker conditioner:

ITEM 1.

All self propelled riding ball field conditioning equipment offered as an equivalent shall meet or exceed the following minimum requirements:

- 12 horsepower gasoline engine,
- 3-wheel Hydrostatic drive
- Adjustable driver seat with steering wheel
- Uses a variety of attachments for grounds conditioning, which may include, but not limited to:
  - Leveling blade
  - Field rake or finisher
  - Drag mat
  - Scarifier
  - Grooming broom or brush

CATEGORY 8: Recreation area Equipment - Self propelled Electric riding ball field conditioner:

ITEM 2.

All self propelled riding ball field conditioning equipment offered as an equivalent shall meet or exceed the following minimum requirements:

- 5 peak horsepower, 48 volt DC electric motor
- (4) 12 volt deep cycle batteries
- Charging system for 110 VAC or 220 VAC input
- Direct drive motor to rear wheels transaxle
- Adjustable driver seat with steering wheel
- Uses a variety of attachments for grounds conditioning, which may include, but not limited to:
  - Leveling blade
  - Field rake or finisher
  - Drag mat
  - Scarifier
  - Grooming broom or brush

CATEGORY 8: Recreation area Equipment - Towed ball field scarifier, rake, and surface conditioner:

ITEM 3.

All towed ball field conditioning equipment offered as an equivalent shall meet or exceed the following minimum requirements:

- Towed behind small tractor or off road service vehicle
- Basic unit with locked and float position selection
- Basic towed unit 70” minimum width
- Uses a variety of attachments for grounds conditioning, which may include, but not limited to:
  - Heavy duty scarifier
  - Light duty scarifier
  - Double brush broom

CATEGORY 8: Recreation area Equipment - Walk-behind self propelled field line painter:

ITEM 4.

All walk behind line painting equipment offered as an equivalent shall meet or exceed the following minimum requirements:

- 3 HP Gasoline engine, drives unit and paint pump system,
- 3-wheel tricycle chassis, with pneumatic tires
- Self propelled, with handle mounted drive engagement
- Variable line width, 2” to 6” wide
- Agitation system to keep paint mixed
- 10 gallons minimum capacity line paint tank

---------- CATEGORY 9: Aerator Equipment ----------

CATEGORY 9: Aerator Equipment - Tractor towed PTO driven large area aerator:

ITEM 1.

All tractor towed aerator equipment offered as an equivalent shall meet or exceed the following minimum requirements:

- 98” minimum aeration width
- Up to 5” aeration depth capability
- 3-point tractor hitch towed, tractor PTO driven
- 540 RPM tractor PTO required, 2,300 pounds 3-point hitch lift capacity
- Choice of coring or solid tines

CATEGORY 9: Aerator Equipment - Tractor towed PTO driven deep tine aerator:

ITEM 2.

All tractor towed aerator equipment offered as an equivalent shall meet or exceed the following minimum requirements:

- 72” minimum aeration width
- Minimum 8” aeration depth capability
- 3-point tractor hitch towed, tractor PTO driven
- 540 RPM tractor PTO required, 2,800 pounds 3-point hitch lift capacity
- Choice of coring or solid tines

CATEGORY 9: Aerator Equipment - Self propelled small to medium area walk-behind aerator:

ITEM 3.

All walk-behind aerator equipment offered as an equivalent shall meet or exceed the following minimum requirements:

- 48" aeration width
- Up to 4" aeration depth capability
- 20 horsepower gasoline engine,
- 7.5 gallon fuel tank
- 3-wheel hydrostatic drive system

CATEGORY 9: Aerator Equipment - Self propelled small area walk-behind aerator:

ITEM 4.

All walk-behind aerator equipment offered as an equivalent shall meet or exceed the following minimum requirements:

- 31" aeration width
- Up to 3" aeration depth capability
- 20 horsepower gasoline engine,
- 5 gallon fuel tank
- 2 wheel drive system

---------- CATEGORY 10: Debris Blower Equipment ----------

CATEGORY 10: Blower Equipment - Towed engine driven debris blower, to be towed behind an off road service vehicle:

ITEM 1.

All truck towed engine driven blower equipment offered as an equivalent shall meet or exceed the following minimum requirements:

- 20 horsepower gasoline engine,
- Turbine fan
- Single nozzle blower air chute, 360 degrees rotation
- 5 gallon fuel tank
- Remote control of unit from vehicle driver station, to include blower air chute rotation

CATEGORY 10: Blower Equipment - Tractor Towed PTO driven debris blower, medium air volume:

ITEM 2

All tractor towed PTO driven blower equipment offered as an equivalent shall meet or exceed the following minimum requirements:

- 540 RPM PTO powered
- 3-point hitch mounted
- Single nozzle blower air chute, 180 degrees rotation
- 6,000 Cubic feet per minute (CFM) air flow
- Turf protection roller

CATEGORY 10: Blower Equipment - Tractor Towed PTO driven debris blower, high air volume:

ITEM 3.

All tractor towed PTO driven blower equipment offered as an equivalent shall meet or exceed the following minimum requirements:

- 540 RPM PTO powered
- 3-point hitch mounted
- Single nozzle blower air chute, 180 degrees rotation
- 7,000 Cubic feet per minute (CFM) air flow, minimum
- Turf protection roller

---------- CATEGORY 11: Seeding Equipment ----------

CATEGORY 11: Seeding Equipment - Tractor Towed PTO driven overseeder equipment for large area seeding:

ITEM 1.

All tractor towed PTO driven over seeding equipment offered as an equivalent shall meet or exceed the following minimum requirements:

- Tractor PTO powered, 540 RPM
- 3-point hitch mounted
- 72” seeding width
- 0” to 1½” seed depth
- Slip clutch drive line protection
- 5 bushel waterproof seed box with seed agitator
- Soil slicing knives for seed deposit

CATEGORY 11: Seeding Equipment - Tractor Towed ground driven overseeder equipment for medium area seeding:

ITEM 2.

All tractor towed ground driven over seeding equipment offered as an equivalent shall meet or exceed the following minimum requirements:

- 3-point hitch mounted
- 48” seeding width
- 0” to 1½” seed depth
- 3 bushel seed box
- Metering seed cups

CATEGORY 11: Seeding Equipment - Walk-Behind self propelled overseeder equipment for small area seeding:

ITEM 3.

All walk behind self propelled over seeding equipment offered as an equivalent shall meet or exceed the following minimum requirements:

- 11 horsepower gasoline engine
- V-belt drive
- 19” seeding width
- 0” to 1½” seed depth
- Belt tightening clutch drive
- .8 cubic ft. seed box
- Soil slicing system for seed deposit
- Seed metering system

---------- CATEGORY 12: Spraying Equipment ----------

CATEGORY 12: Spraying Equipment - Self propelled riding boom type sprayer:

ITEM 1.

All self propelled riding boom type sprayer equipment offered as an equivalent shall meet or exceed the following minimum requirements:

- 30 horsepower diesel engine,
- Hydrostatic drive
- 10 gallons fuel tank
- 18 ft. 3-section folding spray boom, with break-away protection
- 300 gallons spray solution tank
- Enclosed driver cab

CATEGORY 12: Spraying Equipment - Trailer mounted boom type sprayer:

ITEM 2.

All trailer mounted sprayer equipment offered as an equivalent shall meet or exceed the following minimum requirements:

- Gasoline engine driven spray media pump,
- 200 gallons fiberglass or polyethylene spray media tank
- Media agitation system in tank
- 18 ft. 3-section folding spray boom, with break-away protection
- Hand held tree sprayer with 100 ft. of hose
- 50 ft. minimum tree spray height
- Spray control system

CATEGORY 12: Spraying Equipment - Off road service vehicle mounted boom type sprayer:

ITEM 3.

All service vehicle mounted sprayer equipment offered as an equivalent shall meet or exceed the following minimum requirements:

- Mounts on heavy duty flatbed off road service vehicle
- Uses carry vehicle hydraulic system for spray pump drive
- 200 gallons fiberglass or polyethylene spray media tank
- Media agitation system in tank
- 3-section folding spray boom, with break-away protection
- Hand held spray gun capability with 50 ft. minimum hose
- 200 psi available spray pressure
- Spray control system

---------- CATEGORY 13: Hand Held Equipment ----------

CATEGORY 13: Hand Held Equipment - Gasoline powered string trimmer:

ITEM 1.

All hand held equipment offered as an equivalent shall meet or exceed the following minimum requirements:

- Minimum 28cc gasoline engine,
- 17" width of cut
- Weight of 14 pounds or less
- Straight shaft, 58" minimum length
- Minimum fuel capacity 17 ounces
- Dual trimmer line head

CATEGORY 13: Hand Held Equipment - Gasoline powered backpack mounted blower unit:

ITEM 2.

All hand held equipment offered as an equivalent shall meet or exceed the following minimum requirements:

- Minimum 60cc gasoline engine,
- Tube mounted throttle
- Weight of 25 pounds or less
- Minimum 45 ounce fuel tank capacity
- Back rest and shoulder straps
- Minimum air volume with tube 700 cubic feet per minute
- Exit air speed up to 200 MPH minimum
- 75 Db(A) maximum noise level

CATEGORY 13: Hand Held Equipment - Gasoline powered Chain Saw:

ITEM 3.

All hand held equipment offered as an equivalent shall meet or exceed the following minimum requirements:

- Minimum 50cc gasoline engine
- Minimum 3 horsepower,
- 18" bar length
- Weight of 13 pounds or less
- Chain stop brake
- Minimum fuel capacity 12 ounces
- Vibration reduction system

CATEGORY 13: Hand Held Equipment - Gasoline powered Backpack Sprayer:

ITEM 4.

All hand held equipment offered as an equivalent shall meet or exceed the following minimum requirements:

- Minimum 21cc gasoline engine,
- Minimum 16 ounces fuel capacity
- Minimum 5 gallon media tank
- Metal spray wand
- 20 ft. spray distance
- Minimum 140 psi rating
- Shoulder strap system

---------- CATEGORY 14: Miscellaneous Equipment ----------

CATEGORY 14: Miscellaneous Equipment - Ground driven towed fertilizer and sand/salt broadcast spreader:

ITEM 1.

All ground driven towed fertilizer spreader equipment offered as an equivalent shall meet or exceed the following minimum requirements:

- Hopper capacity holds 800 pounds of material
- Equipment is ground wheel driven, no motor drives
- Broadcast spreading of fertilizer up to 50 feet total width
- Spreading of sand and road salts up to 18 feet total width
- Choice of traction profile tires or lawn flotation tires

CATEGORY 14: Miscellaneous Equipment - Tractor Towed PTO driven artificial turf sweeper:

ITEM 2.

All tractor towed PTO driven artificial turf sweeper equipment offered as an equivalent shall meet or exceed the following minimum requirements:

- Tractor PTO driven, 540 RPM
- 3-point hitch mounted, 1,550 lbs lift
- 60” width of sweeping path
- Rotary brush
- Turbine fan
- Filter and sifter

CATEGORY 14: Miscellaneous Equipment - Tractor towed engine driven vacuum turf sweeper:

ITEM 3.

All towed engine driven turf vacuum sweeper equipment offered as an equivalent shall meet or exceed the following minimum requirements:

- 20 horsepower gasoline engine,
- ¾” pin type hitch
- 5 cubic yards capacity debris hopper
- 60 inch sweep width
- Spring loaded flex tip reel for small debris pick up

CATEGORY 14: Miscellaneous Equipment - Walk-Behind self propelled sod cutter:

ITEM 4.

All walk behind self propelled sod cutter equipment offered as an equivalent shall meet or exceed the following minimum requirements:

- 5 horsepower gasoline engine,
- V-belt drive
- 18” sod cutting width
- Sod cutting thickness adjustable to 2½”
- Minimum of (2) forward speeds
- Clutch operation at handle controls

	A	B	C	D	E	F	G	I	J	K	L	M
2	**ATTACHMENT B: PRICING INFORMATION (Rev. 1-16-13)**	**CONTRACT NUMBER: E194-1485 CONTRACT CHANGE NOTICE #1 EFFECTIVE FEBRUARY 1, 2013** (CHANGES MADE TO THIS CONTRACT IS INDICATED IN RED HIGHLIGHTS)								**CONTRACTOR: The Toro Company**		
3	**Ground Maintanance Equipment Awarded Contract with Contractors Published Pricing and Firm Discounts. AWARDED "MARKET BASKET" CATEGORIES WITH LINE ITEMS PER CATEGORY, CONTRACTOR, CONTACT, AND DELIVERY INFORMATION**									**8111 Lyndale Avenue South Bloomington, Minnesota 55420-1196 Contact: Peter Whitacre Telephone: 952-888-8801 Fax: 952-887-8258**		
4			**DESCRIPTION (Reference Attachment A for detailed specifications)**									
5								**QTY**		**MFG. List Price**	**LESS % of DISCOUNT =**	**UNIT PRICE AFTER DISCOUNT**
6												
7	**CATEGORY 4: OFF ROAD UTILITY VEHICLES**											
8	**ITEM 1**		**Heavy Duty 4x4 Diesel Service Truck - Toro Workman HDX-D 4WD - Model #: 07371 Manufacturer's Order Codes: 07371,117-4837**					1		32,461.00	20.00%	$25,453.64
9												
10	**ITEM 3**		**Medium Duty 4x4 Gasoline Service Truck - Workman HDX 4WD: Model #: 07367 - Manufacturer's Order Codes 07367, 117-4837**					1		25,575.00	20.00%	$19,273.64
11												
12	**ITEM 4**		**Medium Duty 4x2 Gasoline Service Truck - Toro Workman MDX, Manufacturer's Order Codes 07273, 07381**					1		12,899.00	20.00%	$9,976.00
13												
14			**Toro MDX-D model 07359 (Base Machine only)**					1		14,354.00	20.00%	$11,483.20
15												
16	**ITEM 5**		**Light Duty 4x2 Gasoline Service Truck - Toro Workman MD; Model #: 07279 - Manufacturer's Order Codes 07279**					1		9,802.00	20.00%	$7,581.60
17												
18			**Workman MDE 07299 (Base Machine only)**					1		12,710.00	20.00%	$10,168.00
19												
20	**ITEM 6**		**Heavy Duty 4x2 Diesel Flatbed Truck - Toro Diesel Workman HD, Model #: 07368 - Manufacturer's Order Codes / Numbers for above item: 07368, 117-4837**					1		27,239.00	20.00%	$21,185.64
21												
22			**Toro Workman HDX-D 07368 (Base Machine only)**					1		26,914.00	20.00%	$21,531.20
23												
24	**ITEM 7**		**Heavy Duty 4x2 Gasoline Flatbed Truck - Toro Gasoline Workman HD, Model #: 07369: Model #: 07369 - Manufacturer's Order Codes 07369, 117-4837**					1		21,980.00	20.00%	$16,917.64
25												
26	**ITEM 8**		**Light Duty 4x2 Gasoline Flatbed Truck - Workman MD; Model #: 07279 - Manufacturer's Order Codes 07279**					1		9,802.00	20.00%	$7,581.60
27												
28			**Workman MDE 07299 (Base Machine only)**					1		12,710.00	20.00%	$10,168.00
29												
30			**PERCENTAGE OF DISCOUNT (%) FOR THE MANUFACTURER'S ATTACHMENTS/IMPLEMENTS FOR "ADDITIONAL LINE ITEMS" - CATEGORY 4/Item 1,3,4,5,6,7,8:**								20.00%	
31												
32												

	A	B	C	D	E	F	G	I	J	K	L	M
2	**ATTACHMENT B: PRICING INFORMATION (Rev. 1-16-13)**	**CONTRACT NUMBER: E194-1485**					**CONTRACT**			**CONTRACTOR: The Toro Company**		
		CHANGE NOTICE #1 EFFECTIVE FEBRUARY 1, 2013 (CHANGES MADE TO THIS CONTRACT IS INDICATED IN RED HIGHLIGHTS)										
3	**Ground Maintanance Equipment Awarded Contract with Contractors Published Pricing and Firm Discounts.** **AWARDED "MARKET BASKET" CATEGORIES WITH LINE ITEMS PER CATEGORY, CONTRACTOR, CONTACT, AND DELIVERY INFORMATION**									**8111 Lyndale Avenue South Bloomington, Minnesota 55420-1196** **Contact: Peter Whitacre** **Telephone: 952-888-8801** **Fax: 952-887-8258**		
33	**CATEGORY 5: SELF PROPELLED RIDING MOWERS**											
34	**ITEM 1**		**Jacobsen HR9016, Toro Groundsmaster 5900D:** **Heavy duty wide coverage gang type rotary blades riding mower for large grass area mowing, and mowing of golf course rough turf:Model #: 31598 - Manufacturer's Order Codes 31598**					1		97,094.00	20.00%	$77,675.20
35												
36			**Toro Groundsmaster 5910 31599 (Base Machine only)**					1		117,084.00	20.00%	$93,667.20
37												
38	**ITEM 2**		**Toro Groundsmaster 4000D: Medium duty wide coverage gang type rotary blade riding mower for large grass area mowing, mowing of golf course rough turf, and large grass sports fields: Model #: 30448 - Manufacturer's Order Codes 30448**					1		69,129.00	20.00%	$51,954.40
39												
40			**Toro Groundsmaster 4010 30446 (Base Machine only)**					1		86,031.00	20.00%	$68,824.80
41												
42	**ITEM 3**		**Toro Groundsmaster 4100D, or equivalent: Medium duty wide coverage single deck type rotary blade riding mower for large grass area mowing, mowing of golf course rough turf, and large grass sports fields: Model #: 30449- Manufacturer's Order Codes 30449**					1		69,191.00	20.00%	$52,000.80
43												
44			**Toro Groundsmaster 4110 30447 (Base Machine only)**					1		86,271.00	20.00%	$69,016.80
45												
46	**ITEM 4**		**Toro Reelmaster 5510D, or equivalent: Wide coverage gang reel type riding mower for large grass area medium finish mowing, and mowing of golf course fairway turf: Reelmaster 5510, Model #: 03680; Manufacturer's Order Codes Numbers for above item: _03680, 03697(qty 5), 03671 110-9600(qty 5)**					1		64,665.80	20.00%	$48,586.28
47												
48			**Toro Reelmaster 5610 03690 traction unit (Base Machine only)**					1		46,081.00	20.00%	$36,864.80
49												
50			**Toro Reelmaster 5210 03660 traction unit (Base Machine only)**					1		37,154.00	20.00%	$29,723.20
51												
52			**Toro Reelmaster 5410 03670 traction unit (Base Machine only)**					1		40,669.00	20.00%	$32,535.20
53												
54	**ITEM 5**		**Toro Reelmaster 3100D, or equivalent: Gang reel type riding mower for small to medium area finish mowing, and mowing of golf course rough, trim, and surrounds areas turf: RM3100-D; Model #: 03170 - Manufacturer's Order Codes: 03170, 03181 (qty 3), 03172, 110-9600 (qty 3)**					1		35,669.52	20.00%	$27,249.69
55												
56			**Toro reelmaster 3100 sidewinder 03171 traction unit (Base Machine only)**					1		25,706.00	20.00%	$20,564.80
57												

	A	B	C	D	E	F	G	I	J	K	L	M
2	**ATTACHMENT B: PRICING INFORMATION (Rev. 1-16-13)**	**CONTRACT NUMBER: E194-1485** **CONTRACT CHANGE NOTICE #1 EFFECTIVE FEBRUARY 1, 2013** (CHANGES MADE TO THIS CONTRACT IS INDICATED IN RED HIGHLIGHTS)								**CONTRACTOR: The Toro Company**		
3	**Ground Maintanance Equipment Awarded Contract with Contractors Published Pricing and Firm Discounts.** **AWARDED "MARKET BASKET" CATEGORIES WITH LINE ITEMS PER CATEGORY, CONTRACTOR, CONTACT, AND DELIVERY INFORMATION**									**8111 Lyndale Avenue South Bloomington, Minnesota 55420-1196** **Contact: Peter Whitacre** **Telephone: 952-888-8801** **Fax: 952-887-8258**		
58	**ITEM 6**		**Toro Greensmaster 3250D: Gang reel type riding mower for small to medium area very fine finish mowing, and mowing of golf course greens: Model #: 04384- Manufacturer's Order Codes 04384, 04624 (Qty 3), 04626, 04477**					1		43,030.00	20.00%	$33,408.80
59												
60			**Toro Greensmaster 3150 04358 traction unit (Base Machine only)**					**1**		26,555.00	20.00%	$21,244.00
61												
62			**Toro Greensmaster 3300 04510 traction unit (Base Machine only)**					**1**		29,066.00	20.00%	$23,252.80
63												
64			**Toro Greensmaster 3400 04520 traction unit (Base Machine only)**					**1**		32,626.00	20.00%	$26,100.80
65												
66			**Toro Greensmaster 3320 04530 traction unit (Base Machine only)**					**1**		31,866.00	20.00%	$25,492.80
67												
68			**Toro Greensmaster 3420 04540 traction unit (Base Machine only)**					**1**		**35,261.00**	**20.00%**	**$28,208.80**
69												
70	**ITEM 7**		**Toro Groundsmaster 360: Zero turn type rotary blade riding mower for medium and large size area general mowing and lawn area maintenance: Model #: 30536; Manufacturer's Order Codes 30536, 30549**					1		28,453.00	20.00%	$22,223.20
71												
72			**Toro GM360 side discharge deck 30534 (Base Machine only)**					**1**		27,760.00	20.00%	$22,208.00
73												
74			**Toro GM360 4WD 30537 (Base Machine only)**					**1**		32,126.00	20.00%	$25,700.80
75												
76			**Toro GM360 base deck 4WD 30539 (Base Machine only)**					**1**		32,272.00	20.00%	$25,817.60
77												
78			**Toro GM360 4WD with cab 30540 (Base Machine only)**					**1**		48,221.00	20.00%	$38,576.80
79												
80			**Toro GM360 4WD base deck with cab 30542 (Base Machine only)**					**1**		48,221.00	20.00%	$38,576.80
81												
82			**Toro GM7200 72" side discharge 30360 (Base Machine only)**					**1**		22,087.00	20.00%	$17,669.60
83												
84			**Toro GM7210 72" side discharge 30363 (Base Machine only)**					**1**		25,450.00	20.00%	$20,360.00
85												
86			**Toro GM7210 winter only 30381 (Base Machine only)**					**1**		20,899.00	20.00%	$16,719.20
87												
88			**Toro GM7200 72" base deck 30461 (Base Machine only)**					**1**		22,159.00	20.00%	$17,727.20

	A	B	C	D	E	F	G	I	J	K	L	M
2	**ATTACHMENT B: PRICING INFORMATION (Rev. 1-16-13)**		**CONTRACT NUMBER: E194-1485** **CONTRACT CHANGE NOTICE #1 EFFECTIVE FEBRUARY 1, 2013** (CHANGES MADE TO THIS CONTRACT IS INDICATED IN RED HIGHLIGHTS)							**CONTRACTOR: The Toro Company**		
3	**Ground Maintanance Equipment Awarded Contract with Contractors Published Pricing and Firm Discounts. AWARDED "MARKET BASKET" CATEGORIES WITH LINE ITEMS PER CATEGORY, CONTRACTOR, CONTACT, AND DELIVERY INFORMATION**									**8111 Lyndale Avenue South Bloomington, Minnesota 55420-1196 Contact: Peter Whitacre Telephone: 952-888-8801 Fax: 952-887-8258**		
89												
90			**Toro GM7200 62" base deck 30462 (Base Machine only)**					**1**		21,785.00	20.00%	$17,428.00
91												
92			**Toro GM7210 72" base deck 30464 (Base Machine only)**					**1**		25,677.00	20.00%	$20,541.60
93												
94			**Toro GM7210 62" base deck 30465 (Base Machine only)**					**1**		25,287.00	20.00%	$20,229.60
95												
96			**Toro GM7200 60" side discharge 30467 (Base Machine only)**					**1**		22,007.00	20.00%	$17,605.60
97												
98			**Toro GM7210 60" side discharge 30468 (Base Machine only)**					1		24,855.00	20.00%	$19,884.00
99			**PERCENTAGE OF DISCOUNT (%) FOR THE MANUFACTURER'S ATTACHMENTS/IMPLEMENTS FOR "ADDITIONAL LINE ITEMS 1-7" CATEGORY 5:**								20.00%	
100			**ALL EQUIPMENT IN ITEM 8 MUST BE ORDERED FROM TESCO**									
101	**ITEM 8**		**Toro Professional Z500: Zero turn type rotary blade riding mower for medium size area general mowing: Model #: 74915 Manufacturer's Order Codes 74915**					**1**		**$11,777.00**	**30.00%**	**$8,127.00**
102												
103			**TORO 27 HP Kohler Command Pro w/ 72" TURBO FORCE Deck Model # 74916 (Base Machine only)**					**1**		12,054.00	30.00%	$8,437.80
104												
105			**TORO 27 HP Kohler Command Pro EFI w/ 60" TURBO FORCE Deck Model #74930 (Base Machine only)**					**1**		12,332.00	30.00%	$8,632.40
106												
107			**TORO 25.5 HP Kawasaki FX w/ 60" TURBO FORCE Deck Model #74925 (Base Machine only)**					**1**		12,888.00	30.00%	$9,021.60
108												
109			**TORO 25.5 HP Kawasaki FX w/ 72" TURBO FORCE Deck Model # 74927 (Base Machine only)**					**1**		13,443.00	30.00%	$9,410.10
110												
111			**TORO 29 HP Kohler EFI w/ 60" TURBO FORCE Deck Model # 74926 (Base Machine only)**					1		13,443.00	30.00%	$9,410.10
112												
113			**TORO 29 HP Kohler EFI w/ 72" TURBO FORCE Deck Model # 74928 (Base Machine only)**					1		13,999.00	30.00%	$9,799.30
114												
115			**TORO34 HP Kohler Command w/ 60" TURBO FORCE Deck Model # 74936 (Base Machine only)**					1		13,499.00	30.00%	$9,449.30
116												
117			**TORO34 HP Kohler Command w/ 72" TURBO FORCE Deck Model # 74938 (Base Machine only)**					1		14,054.00	30.00%	$9,837.80
118												
119			**TORO 25.5 HP Kawasaki Liquid Propane w/ 60" TURBO FORCE Deck Model # 74975 (Base Machine only)**					1		15,388.00	30.00%	$10,771.60
120												

	A	B	C	D	E	F	G	I	J	K	L	M
2	ATTACHMENT B: PRICING INFORMATION (Rev. 1-16-13)	CONTRACT NUMBER: E194-1485 CONTRACT CHANGE NOTICE #1 EFFECTIVE FEBRUARY 1, 2013 (CHANGES MADE TO THIS CONTRACT IS INDICATED IN RED HIGHLIGHTS)								CONTRACTOR: The Toro Company		
3	Ground Maintanance Equipment Awarded Contract with Contractors Published Pricing and Firm Discounts. AWARDED "MARKET BASKET" CATEGORIES WITH LINE ITEMS PER CATEGORY, CONTRACTOR, CONTACT, AND DELIVERY INFORMATION									8111 Lyndale Avenue South Bloomington, Minnesota 55420-1196 Contact: Peter Whitacre Telephone: 952-888-8801 Fax: 952-887-8258		
121			TORO 25.5 HP Kawasaki Liquid Propane w/ 72" TURBO FORCE Deck Model # 74977 (Base Machine only)					1		15,943.00	30.00%	$11,160.10
122												
123			TORO 25 HP Kubota Diesel w/ 60" TURBO FORCE Deck Model # 74267 (Base Machine only)					1		$17,554.00	30.00%	$12,287.80
124												
125			TORO 25 HP Kubota Diesel w/ 72" TURBO FORCE Deck Model # 74274 (Base Machine only)					1		$18,110.00	30.00%	$12,677.00
126												
127			TORO 27 HP Daihatsu Diesel w/ 60" TURBO FORCE Deck Model # 74268 (Base Machine only)					1		19,888.00	30.00%	$13,921.60
128												
129			TORO 27 HP Daihatsu Diesel w/ 72" TURBO FORCE Deck Model # 74269 (Base Machine only)					1		20,443.00	30.00%	$14,310.10
130			ALL EQUIPMENT IN ITEM 9 MUST BE ORDERED FROM TESCO									
131	ITEM 9		Toro 74903: Professional Z5000 - Zero turn type rotary blade riding mower for small to medium size area general mowing and lawn area maintenance: Model #: 74903 - Manufacturer's Order Codes 74903					1		$10,999.00	30.00%	$7,582.40
132												
133			TORO 22 HP Kawasaki FX w/ 52" TURBO FORCE Deck Model # 74953 (Base Machine only)					1		$9,443.00	30.00%	$6,610.10
134												
135			TORO 23.5 HP Kawasaki FX w/ 60" TURBO FORCE Deck Model # 74954 (Base Machine only)					1		$9,888.00	30.00%	$6,921.60
136												
137			TORO 23 HP Kohler Command w/ 48" TURBO FORCE Deck Model #74901 (Base Machine only)					1		$10,443.00	30.00%	$7,310.10
138			ALL EQUIPMENT IN ITEM 10 MUST BE ORDERED FROM TESCO									
139	ITEM 10		TORO 20.5 HP Kawasaki FX w/ 48" TURBO FORCE Deck Model # 74141 - Zero turn type rotary blade riding mower for small size area general mowing and lawn area maintenance:					1		$7,777.00	30.00%	$5,443.90
140												
141			TORO 20.5 HP Kawasaki FX w/ 48" TURBO FORCE Deck model Model #74952 (Base Machine only)					1		9,110.00	30.00%	$6,377.00
142												
143			ATTACHMENTS/IMPLEMENTS FOR "ADDITIONAL LINE ITEMS 8, 9, 10" - CATEGORY 5								15.00%	
144												
145	CATEGORY 6: WALK-BEHIND MOWING EQUIPMENT		ALL EQUIPMENT IN ITEM 1 MUST BE ORDERED FROM TESCO									
146	ITEM 1		Toro Model #: 30678 -Mid Sized Walk Behind Rotary Mower -Fixed Gear T-bar - Manufacturer's Order Codes: 30678 (Base Machine only)					1		$4,221.00	30.00%	$2,954.70
147												
148			TORO 14.5 HP Kawasaki FS w/ 48" TURBO FORCE Fixed Deck Model # 30638 (Base Machine only)					1		4,221.00	30.00%	$2,954.70
149												
150			TORO 14.5 HP Kawasaki FS w/ 48" TURBO FORCE Fixed Deck Model # 30938 (Base Machine only)					1		6,332.00	30.00%	$4,432.40
151												

	A	B	C	D	E	F	G	I	J	K	L	M
2	ATTACHMENT B: PRICING INFORMATION (Rev. 1-16-13)	CONTRACT NUMBER: E194-1485 CONTRACT CHANGE NOTICE #1 EFFECTIVE FEBRUARY 1, 2013 (CHANGES MADE TO THIS CONTRACT IS INDICATED IN RED HIGHLIGHTS)								CONTRACTOR: The Toro Company		
3	Ground Maintanance Equipment Awarded Contract with Contractors Published Pricing and Firm Discounts. AWARDED "MARKET BASKET" CATEGORIES WITH LINE ITEMS PER CATEGORY, CONTRACTOR, CONTACT, AND DELIVERY INFORMATION									8111 Lyndale Avenue South Bloomington, Minnesota 55420-1196 Contact: Peter Whitacre Telephone: 952-888-8801 Fax: 952-887-8258		
152			TORO 15 HP Kawasaki FS w/ 48" TURBO FORCE Deck Model # 30078 (Base Machine only)					1		5,777.00	30.00%	$4,043.90
153												
154			TORO 18.5 HP Kawasaki FS, Electric Start w/ 48" TURBO FORCE Deck Model # 30488 (Base Machine only)					1		7,777.00	30.00%	$5,443.90
155												
156			TORO 18.5 HP Kawasaki FS w/ 48" TURBO FORCE Deck Stand On Model # 74538 (Base Machine only)					1		8,943.00	30.00%	$6,260.10
157												
158			TORO 23 HP Kawasaki FS w/ 48" TURBO FORCE Deck Stand On Model # 74548 (Base Machine only)					1		9,277.00	30.00%	$6,493.90
159												
160			TORO 23 HP Kawasaki FS w/ 52" TURBO FORCE Deck Stand On Model # 74549 (Base Machine only)					1		9,499.00	30.00%	$6,649.30
161												
162			TORO 24 HP Kawasaki FS w/ 60" TURBO FORCE Deck Stand On Model # 74553 (Base Machine only)					1		10,277.00	30.00%	$7,193.90
163												
164			TORO 27 HP Kohler Command Pro EFI w/ 60" TURBO FORCE Deck Stand On Model # 74583 (Base Machine only)					1		11,054.00	30.00%	$7,737.80
165			ALL EQUIPMENT IN ITEM 2 MUST BE ORDERED FROM TESCO									
166	ITEM 2		Toro 22198 Heavy duty Recycler: Walk-behind self propelled rotary blade mower for small size area general mowing and lawn area maintenance: Manufacturer's Order Codes 22198					1		$1,499.00	30.00%	$1,049.30
167												
168			TORO Heavy-Duty Recycler, Honda GXV160, Self-Propelled, Zone Start model Model #22195 (Base Machine only)					1		1,610.00	30.00%	$1,127.00
169												
170			TORO Heavy-Duty Recycler, Honda GXV160, Self-Propelled, BBC model Model #22196 (Base Machine only)					1		1,721.00	30.00%	$1,204.70
171												
172			PERCENTAGE OF DISCOUNT (%) FOR THE MANUFACTURER'S ATTACHMENTS/IMPLEMENTS FOR "ADDITIONAL LINE ITEMS 1, 2" - CATEGORY 6								15.00%	
173												
174	ITEM 3		Toro Greensmaster GR1600: Walk-behind self propelled reel type mower for finish mowing of golf greens: Model #: 04056 Manufacturer's Order Codes 04056					1		9,792.00	20.00%	$7,648.80
175												
176			Greensmaster Flex 2100 model 04040 traction unit (Base Machine only)					1		7,663.00	20.00%	$6,130.40
177												
178			Greensmaster Flex 1800 model 04041 traction unit (Base Machine only)					1		7,898.00	20.00%	$6,318.40
179												
180			Greensmaster eFlex 2100 model 04042 traction unit (Base Machine only)					1		8,715.00	20.00%	$6,972.00
181												
182			Greensmaster eFLEX 1800 model 04043 traction unit (Base Machine only)					1		8,775.00	20.00%	$7,020.00
183												

	A	B	C	D	E	F	G	I	J	K	L	M
2	**ATTACHMENT B: PRICING INFORMATION (Rev. 1-16-13)**	**CONTRACT NUMBER: E194-1485** **CONTRACT CHANGE NOTICE #1 EFFECTIVE FEBRUARY 1, 2013** (CHANGES MADE TO THIS CONTRACT IS INDICATED IN RED HIGHLIGHTS)								**CONTRACTOR: The Toro Company**		
3	**Ground Maintanance Equipment Awarded Contract with Contractors Published Pricing and Firm Discounts. AWARDED "MARKET BASKET" CATEGORIES WITH LINE ITEMS PER CATEGORY, CONTRACTOR, CONTACT, AND DELIVERY INFORMATION**									**8111 Lyndale Avenue South Bloomington, Minnesota 55420-1196 Contact: Peter Whitacre Telephone: 952-888-8801 Fax: 952-887-8258**		
184			**Greensmaster 800 model 04045 traction unit (Base Machine only)**					1		8,954.00	20.00%	$7,163.20
185												
186			**Greensmaster 1000 model 04055 traction unit (Base Machine only)**					1		8,761.00	20.00%	$7,008.80
187												
188			**PERCENTAGE OF DISCOUNT (%) FOR THE MANUFACTURER'S ATTACHMENTS/IMPLEMENTS FOR "ADDITIONAL LINE ITEMS 3" - CATEGORY 6:**								20.00%	
189												
190	**CATEGORY 7: TURF MAINTENANCE EQUIPMENT**											
191	**ITEM 1**		**Toro MH-400: Tractor towed material handler and large area hydraulic driven top dresser for lawn area maintenance, material handling, and golf course sand trap maintenance: Model #: 44931 - Manufacturer's Order Codes 44931, 44938 & 44944**					1		35,390.00	20.00%	$27,240.00
192												
193			**MH-400 EH2 Wireless model 44934 (Base Machine only)**					1		26,898.00	20.00%	$21,518.40
194												
195	**ITEM 4**		**Toro TD 2500: Ground driven top dresser for small to medium lawn area maintenance: Model #: 44507 - Manufacturer's Order Codes 44507**					1		13,321.00	20.00%	$10,253.60
196												
197	**ITEM 5**		**ProPass 200: Truck mounted broadcast spinner type top dresser for small to medium lawn area maintenance: Model #: 44701 - Manufacturer's Order Codes 44701, 44707 & 07316**					1		13,153.00	20.00%	$10,169.60
198												
199			**ProPass 200 Wireless model 44700 base kit (Base Machine only)**					1		12,276.00	20.00%	$9,820.80
200												
201	**ITEM 6**		**Toro Topdresser TD 1800: Truck mounted drop type top dresser for small lawn area maintenance: Model #: 44225 Manufacturer's Order Codes 44225, 93-9225**					1		7,761.00	20.00%	$6,087.07
202												
203			**PERCENTAGE OF DISCOUNT (%) FOR THE MANUFACTURER'S ATTACHMENTS/IMPLEMENTS FOR "ADDITIONAL LINE ITEMS 1, 4, 5, 6" - CATEGORY 7:**								20.00%	
204												
205	**CATEGORY 8: RECREATION AREA EQUIPMENT**											
206	**ITEM 1**	1	**John Deere 1200, Toro Infield Pro 3040, or equivalent: Self propelled riding ball field and golf course bunker conditioner:**					1		16,787.00	20.00%	$12,896.00
207												

	A	B	C	D	E	F	G	I	J	K	L	M
2	ATTACHMENT B: PRICING INFORMATION (Rev. 1-16-13)	CONTRACT NUMBER: E194-1485 CONTRACT CHANGE NOTICE #1 EFFECTIVE FEBRUARY 1, 2013 (CHANGES MADE TO THIS CONTRACT IS INDICATED IN RED HIGHLIGHTS)								CONTRACTOR: The Toro Company		
3	Ground Maintanance Equipment Awarded Contract with Contractors Published Pricing and Firm Discounts. AWARDED "MARKET BASKET" CATEGORIES WITH LINE ITEMS PER CATEGORY, CONTRACTOR, CONTACT, AND DELIVERY INFORMATION									8111 Lyndale Avenue South Bloomington, Minnesota 55420-1196 Contact: Peter Whitacre Telephone: 952-888-8801 Fax: 952-887-8258		
208			Sand Pro 5040 model 08705 base unit (Base Machine only)					1		19,259.00	20.00%	$15,407.20
209												
210			Sand Pro 2020 - Carb Compliant model 08887 base unit (Base Machine only)					1		12,097.00	20.00%	$9,677.60
211												
212			PERCENTAGE OF DISCOUNT (%) FOR THE MANUFACTURER'S ATTACHMENTS/IMPLEMENTS FOR "ADDITIONAL LINE ITEMS 1" - CATEGORY 8:								20.00%	
213												
214												
215	CATEGORY 9: AERATOR EQUIPMENT											
216	ITEM 1		Toro Procore 1298: Tractor towed PTO driven large area aerator: Model #: 09716 - Manufacturer's Order Codes 09716, 09797 (qty 6), 120-1044 (qty 4), 120-1051 (qty 2)					1		37,233.46	20.00%	$28,686.24
217												
218			ProCore 864 model 09715 (Base Machine only)					1		31,012.00	20.00%	$24,809.60
219												
220	ITEM 2		Toro Procore SR72, or equivalent: Tractor towed PTO driven deep tine aerator: Model #: 09935 - Manufacturer's Order Code 09935					1		29,787.00	20.00%	$22,904.80
221												
222			ProCore SR48 model 09930 (Base Machine only)					1		23,689.00	20.00%	$18,951.20
223												
224			ProCore SR54 model 09931 (Base Machine only)					1		19,755.00	20.00%	$15,804.00
225												
226			ProCore SR54-S model 09932 (Base Machine only)					1		22,770.00	20.00%	$18,216.00
227												
228			ProCore SR70 model 09933 (Base Machine only)					1		24,303.00	20.00%	$19,442.40
229												
230			ProCore SR70-S model 09934 (Base Machine only)					1		27,590.00	20.00%	$22,072.00
231												
232			ProCore SR75 model 09936 (Base Machine only)					1		35,247.00	20.00%	$28,197.60
233												
234	ITEM 3		Toro Procore 648, Model #: 09200: Self propelled small to medium area walk-behind aerator: Manufacturer's Order Codes 09200, 09797 (qty 3), 120-1051 (qty 1), 120-1044 (qty 2					1		26,511.73	20.00%	$20,425.52
235												
236			PERCENTAGE OF DISCOUNT (%) FOR THE MANUFACTURER'S ATTACHMENTS/IMPLEMENTS FOR "ADDITIONAL LINE ITEMS 1, 2, 3" - CATEGORY 9:								20.00%	

	A	B	C	D	E	F	G	I	J	K	L	M
2	**ATTACHMENT B: PRICING INFORMATION (Rev. 1-16-13)**		**CONTRACT NUMBER: E194-1485** **CONTRACT CHANGE NOTICE #1 EFFECTIVE FEBRUARY 1, 2013** (CHANGES MADE TO THIS CONTRACT IS INDICATED IN RED HIGHLIGHTS)							**CONTRACTOR: The Toro Company**		
3	**Ground Maintanance Equipment Awarded Contract with Contractors Published Pricing and Firm Discounts. AWARDED "MARKET BASKET" CATEGORIES WITH LINE ITEMS PER CATEGORY, CONTRACTOR, CONTACT, AND DELIVERY INFORMATION**									**8111 Lyndale Avenue South Bloomington, Minnesota 55420-1196 Contact: Peter Whitacre Telephone: 952-888-8801 Fax: 952-887-8258**		
237												
238	**CATEGORY 10: BLOWER EQUIPMENT**											
239	**ITEM 1**		**Toro Proforce 44538: Towed engine driven debris blower, to be towed behind an off road service vehicle: Model #: 44538**					1		8,539.00	20.00%	$6,578.40
240												
241	**ITEM 3**		**Toro 600 model 44536 Debris blower: Tractor Towed PTO driven debris blower, high air volume: Model #: 44536**					1		6,410.00	20.00%	$4,957.60
242												
243			**PERCENTAGE OF DISCOUNT (%) FOR THE MANUFACTURER'S ATTACHMENTS/IMPLEMENTS FOR "ADDITIONAL LINE ITEMS 1, 3" - CATEGORY 10:**								20.00%	
244												
245	**CATEGORY 11: SEEDING EQUIPMENT**											
246												
247	**ITEM 2**		**John Deere TR10, or equivalent: Tractor Towed ground driven overseeder equipment for medium area seeding:**					1		9,853.00	20.00%	$7,519.20
248												
249			**PERCENTAGE OF DISCOUNT (%) FOR THE MANUFACTURER'S ATTACHMENTS/IMPLEMENTS FOR "ADDITIONAL LINE ITEMS 2" - CATEGORY 11:**								20.00%	
250												
251												
252	**CATEGORY 12: SPRAYING EQUIPMENT**											
253	**ITEM 1**		**Toro MP5800, or equivalent: Self propelled riding boom type sprayer: Model #: 41593 - Manufacturer's Order Codes 41593, 41616, 106-4839, 99-0569 (qty 2), A-1136 (cab install labor added to price)**					1		52,050.00	20.00%	$40,032.93
254												
255			**Multi Pro 1250 model 41198 (Base Machine only)**					1		31,939.00	20.00%	$25,551.20
256												
257			**Multi Pro 1200 model 41199 (Base Machine only)**					1		28,976.00	20.00%	$23,180.80
258												
259	**ITEM 3**		**Toro Workman 200, or equivalent: Off road service vehicle mounted boom type sprayer: Model #: 41235 - Manufacturer's Order Codes41235, 41133, 07419, 07378, 07420**					1		16,265.00	20.00%	$12,625.60
260												

	A	B	C	D	E	F	G	I	J	K	L	M
2	**ATTACHMENT B: PRICING INFORMATION (Rev. 1-16-13)**	**CONTRACT NUMBER: E194-1485**					**CONTRACT CHANGE NOTICE #1 EFFECTIVE FEBRUARY 1, 2013** (CHANGES MADE TO THIS CONTRACT IS INDICATED IN RED HIGHLIGHTS)			**CONTRACTOR: The Toro Company**		
3	**Ground Maintanance Equipment Awarded Contract with Contractors Published Pricing and Firm Discounts.** **AWARDED "MARKET BASKET" CATEGORIES WITH LINE ITEMS PER CATEGORY, CONTRACTOR, CONTACT, AND DELIVERY INFORMATION**									**8111 Lyndale Avenue South Bloomington, Minnesota 55420-1196** **Contact: Peter Whitacre** **Telephone: 952-888-8801** **Fax: 952-887-8258**		
261			**PERCENTAGE OF DISCOUNT (%) FOR THE MANUFACTURER'S ATTACHMENTS/IMPLEMENTS FOR "ADDITIONAL LINE ITEMS 1, 3" - CATEGORY 12:**								20.00%	
262												
263	**CATEGORY 14: MISCELLANEOUS EQUIPMENT**											
264												
265	**ITEM 3**	3	**Toro Rake-O-Vac, or equivalent: Tractor towed engine driven vacuum turf sweeper: Model #: 07050: Manufacturer's Order Code 07050**					1		37,136.00	20.00%	$28,584.00
266												
267			**New Rake-O-Vac® model 07055 (Base Machine only)**					1		38,026.00	20.00%	$30,420.80
268												
269			**PERCENTAGE OF DISCOUNT (%) FOR THE MANUFACTURER'S ATTACHMENTS/IMPLEMENTS FOR "ADDITIONAL LINE ITEMS 3" - CATEGORY 14:**								20.00%	
270												
271												
272												
273												
274												

2013 Vermeer Global Account Pricing
National Joint Powers Alliance® (NJPA)

☐ QUOTE
☐ ORDER

LM42 - 43.5 hp Plow / Trencher

Basic Unit

LM42 Tractor w/ Deutz Diesel Engine (005); 26x12-12 SuperGrip Tires (42" width) (qty of 4) (042); One-Speed Ground Drive (109); VP40 Plow (800); Tamping Feet (810); Sod Cutter (knife assy) (812); and Wheel Guard Kit (110)

For additional options, see "Optional Features" section below.

Basic Unit Price: $27,165.00

LD6 Trencher (Select one of the following): **Add to Basic Unit Price:**

- ☑ LD6 Trencher Attachment (300) (Does not include chain, boom or restraint bar) **$2,919.00**
- ☑ LD6 Pivoting Rear Trencher Attachment (310) (Does not include chain, boom or restraint bar) **$4,384.00**
- ☑ No front attachment - plumb for trencher (097) **$104.00**

If selecting a trencher attachment, please add boom, cutter setup, and restraint bar from table below.
(If desired combination not shown, please consult your local Vermeer Dealer for pricing & specs)

Price includes boom, 2250 chain, cutters, restraint bar & greaseless E.I.

Boom/Cutter Width	Partial Cup	Full Cup	Tiger Cup Combo	Rotary Combo	Welded Shark	Shark Combo	
24" - 4"	$897.00	$1,017.00	$1,185.00	$1,258.00	$1,119.00	$1,070.00	**Enter Chain Price Below:**
24" - 5"	$892.00	$1,007.00	$1,207.00	$1,275.00	$1,149.00	$1,102.00	
24" - 6"	$933.00	$1,066.00	$1,264.00	$1,293.00	$1,178.00	$1,124.00	
30" - 4"	$1,017.00	$1,152.00	$1,337.00	$1,415.00	$1,273.00	$1,215.00	
30" - 5"	$1,011.00	$1,142.00	$1,360.00	$1,431.00	$1,307.00	$1,240.00	**Enter Crumber Price Below:**
30" - 6"	$1,050.00	$1,210.00	$1,422.00	$1,449.00	$1,341.00	$1,276.00	
36" - 4"	$1,105.00	$1,257.00	$1,474.00	$1,559.00	$1,395.00	$1,324.00	
36" - 5"	$1,098.00	$1,244.00	$1,476.00	$1,581.00	$1,433.00	$1,353.00	
36" - 6"	$1,141.00	$1,326.00	$1,551.00	$1,600.00	$1,471.00	$1,385.00	
42" - 4"	$1,193.00	$1,361.00	$1,588.00	$1,674.00	$1,512.00	$1,439.00	
42" - 5"	$1,185.00	$1,347.00	$1,625.00	$1,697.00	$1,554.00	$1,477.00	**Enter Ext Plate Price Below:**
42" - 6"	$1,226.00	$1,429.00	$1,684.00	$1,717.00	$1,595.00	$1,499.00	
Crumber Bridge Options	36" Boom	42" Boom		4" Extension Plate (330)		$28.00	
	$190.00	$195.00		6" Extension Plate (331)		$29.00	

End Idler - 7" (Greaseable) (404); in lieu of greaseless (403)

Optional Features:

- ☑ Wheel Weight Kit for 26x12-12 SuperGrip Tire (42" width) (112 - qty 4) **$640.00**
- ☑ LBA6 Boring Attachment (102) **$1,217.00**
- ☑ Two Speed Ground Drive (108), in lieu of one speed ground drive (109) **$1,090.00**
- ☑ Side Weights (107), in lieu of wheel guard kit (110) **$1,054.00**
- ☑ Front Weight Kit (3-108 lb wts) (do not use w/ -813) (100) **$752.00**
- ☑ Additional Weight Kit (2-108 lb. wts) (use w/ -100) (101) **$481.00**
- ☑ Reel Carrier w/ Trencher (814) **$153.00**
- ☑ Reel Carrier w/o Trencher (813) **$706.00**
- ☑ Sod Cutter (wheel assembly) (811), in lieu of knife assembly (812) **$113.00**
- ☑ Plow Blade (contact local Vermeer dealer for specifications and pricing) **$_____.___**
- ☑ Miscellaneous Features: sales code _ _ _ **$_____.___**

Extended Warranty: (choose one)

- ☑ 2 Year Parts & Labor Warranty (PL2) **$1,705.00**
- ☑ 3 Year Parts & Labor Warranty (PL3) **$2,844.00**
- ☑ Preventive Maintenance Package **$_____.___**

Subtotal: _____
Dealer Freight & Prep: _____
Quantity: _____
Total: _____
Enter Sales Tax %: _____ **Sales Tax:** _____

Grand Total: _____

ACCEPTED:

Vermeer
BY: _____
DATE: _____

Customer
BY: _____
DATE: _____

Pricing effective 06/01/13
NOTE: All pricing in USD $
NOTE: Include applicable sales tax
Quotes valid for 30 days

Any applicable sales tax is not included. Prices subject to change without notice. These prices are exclusive of any and all duties, import fees, taxes, or other similar charges. These prices may not be available in any transaction involving a trade. This sheet may not include all possible specifications available for this model. For complete product specifications, please contact your local authorized Vermeer dealer. Unless otherwise noted, dealer freight & prep to be determined.

2013 Vermeer Global Account Pricing
National Joint Powers Alliance ® (NJPA)

☐ QUOTE
☐ ORDER

PD10 Pile Driver

Basic Unit	
PD10 Pile Drive - 10' Mast w/ hydrostatic track drive, 47 hp Yanmar diesel engine Tier 4i, operator station w/ control display, joystick controls, Autoplumb feature, tool Box, hammer lock and mirror, harness (work light / remote control) (001); Hydraulic Fluid - Hy-Power 68 (076)	
For additional options, see "Optional Features" section below.	
Basic Unit Price:	**$112,089.00**

Optional Features:	**Add to Basic Unit Price:**
☑ Hydraulic Fluid - Hy-Power 100 (077)	**$1.00**
☑ Mast Extension to 15' (030)	**$3,092.00**
☑ Work Lights (101)	**$581.00**
☑ Laser Received (103)	**$3,046.00**
☑ PD10 Remote Control (100)	**$4,990.00**
Pile Driver Guides (One Required):	
NOTE: Pile Driver Upper and Lower Guides are specific to the jobsite application due to varying types of piles/posts. Pleasea contact piledriverguides@vermeer.com with specifics of pile/post to place order. The Pile Driver may be shipped prior to completion of the new guides. Please ensure that the guides are installed on the product prior to use and/or delivery to retail customer.	
☑ Guide - 5.90 x 3.94 Side Load (200A)	**$350.00**
☑ Guide - 5.90 x 3.94 Rear Load (200B)	**$322.00**
☑ Guide - 6.20 x 6.02 Side Load (201A)	**$353.00**
☑ Guide - 6.20 x 6.02 Rear Load (201B)	**$322.00**
☑ Guide - 5.77 x 3.94 Side Load (202A)	**$351.00**
☑ Guide - 5.77 x 3.94 Rear Load (202B)	**$322.00**
☑ Guide - 5.99 x 5.99 Side Load (203A)	**$348.00**
☑ Guide - 5.99 x 5.99 Rear Load (203B)	**$321.00**
☑ Guide - 6.03 x 4.00 Side Load (204A)	**$351.00**
☑ Guide - 6.03 x 4.00 Rear Load (204B)	**$319.00**
☑ Guide - 6.31 x 5.25 Side Load (205A)	**$353.00**
☑ Guide - 6.31 x 5.25 Rear Load (205B)	**$325.00**
☑ Guide - 4.50 Round Side Load (230A)	**$335.00**
☑ Guide - 4.50 Round Rear Load (230B)	**$316.00**
☑ Guide - 5.56 Round Side Load (231A)	**$341.00**
☑ Guide - 5.56 Round Rear Load (231B)	**$309.00**
☑ Miscellaneous Features: sales codes _ _ _	**$_____.___**
Extended Warranty: (choose one)	
☑ 2 Year Parts & Labor Warranty (PL2)	**$5,654.00**
☑ 3 Year Parts & Labor Warranty (PL3)	**$9,048.00**
☑ Preventive Maintenance Package	**$_____.___**

Subtotal: _____
Dealer Freight & Prep: _____
Quantity: _____

Total: _____
Enter Sales Tax %: _____ **Sales Tax:** _____

Grand Total: _____

ACCEPTED:

Vermeer	Customer
BY: _____	BY: _____
DATE: _____	DATE: _____

Pricing effective 06/01/13
NOTE: All pricing in USD $
NOTE: Include applicable sales tax
Quotes valid for 30 days

Any applicable sales tax is not included. Prices subject to change without notice. These prices are exclusive of any and all duties, import fees, taxes, or other similar charges. These prices may not be available in any transaction involving a trade or rental transaction. This sheet may not include all possible specifications available with this model. For complete product specifications, please contact your local authorized Vermeer dealer. Unless otherwise noted, dealer freight & prep to be determined.

2013 Vermeer Global Account Pricing
National Joint Powers Alliance ® (NJPA)

☐ **QUOTE**
☐ **ORDER**

RT450 42 hp Ride-On Trencher

Basic Unit

RT450 Trencher w/ 42 hp Deutz F3L2011 diesel engine, high temperature / low oil shutdown (005); planetary front axle w/ ltd. slip (023); planetary rigid rear axle w/ ltd. slip (036); 26x12-12 wheel assy SuperGrip tires (qty of 4) (051); 5-spool valve (076); 2" seat belt (104); 60" 4-Way Backfill Blade w/ joystick control (202); TR455 Trencher - Center Mount (303); TR455 Trencher Hose Plumbing Kit (304)

Add trencher boom & cutter set up and restraint bar combination from table below.

For additional options, see "Optional Features" section below. **Basic Unit Price: $34,811.00**

Required Features: Please add boom, cutter setup, and restraint bar from table below.

(If desired combination not shown, please consult your local Vermeer Dealer for pricing & specs.)

Price includes boom, end idler, 2960 chain, cutters & restraint bar, and front weight kit (830 lbs for 48" boom & 970 lbs for 60" boom) Equipped w/ Center-Mount Trencher or Sliding Offset Trencher					Manual Trench Cleaner Options in lieu of restraint bar:	**Enter Chain Price Below:**
Boom/end idler	6" Partial Cup	6" Combo Shark	6" Full Shark-Weld	6" Full Cup		
48" 8-1/2" EI	$4,166.00	$4,756.00	$5,021.00	$4,526.00	$467.00	**Enter Trench Cleaner Price Below:**
48" - 15" EI	$4,180.00	$4,770.00	$5,034.00	$4,540.00	$418.00	
60" 8-1/2" EI	$4,747.00	$5,315.00	$5,716.00	$5,156.00	$448.00	
60" - 15" EI	$4,884.00	$5,452.00	$5,852.00	$5,292.00	$489.00	

Optional Features:	**Add to Basic Unit Price:**
☑ 60" 6-Way Backfill Blade w/ joystick control (203), in lieu of 4-Way Backfill Blade (202)	**$305.00**
VPX455 Vibratory Plow (803), in lieu of Trencher (303) - Select one option below (includes 8-spool valve (077))	
☑ > If used on unit with backhoe (make sure to select B450 below) - Includes wheel weight kit-front tires only (50 lbs per wheel) (112); and 26 x 12-12 wheel assy (super grip) w/ soft foam filled tires - front tires only (056)	**$8,182.00**
☑ > If used on unit without backhoe (includes required 1430 lbs front weight kit (128))	**$9,544.00**
☑ > If used on unit without backhoe (includes recommended 1800 lbs front weight kit (125))	**$9,826.00**
B450 Backhoe - greaseable (w/ 170 swing) (252); 12" Bucket (262) - Select one option below	
☑ > For unit w/ VPX455 Plow (252)	**$10,667.00**
☑ > For unit w/ 48" boom (252), less front weight kit (126)	
☑ > For unit w/ 60" boom (252), less front weight kit (127)	**$8,896.00**
SO455 Sliding Offset Trencher (327) and SO455 Trencher Hose Plumbing Kit (328) - Select one option below. Options require Supergrip tires (051), which are included in basic unit above:	
☑ > If used on unit with backhoe & 48" boom or 60" boom (make sure to select B450 above)	**$3,582.00**
☑ > If used on unit without backhoe & 48" boom; includes weight kit - 970 lbs (127)	**$3,714.00**
☑ > If used on unit without backhoe & 60" boom; includes weight kit - 1430 lbs (128)	
☑ Planetary Rear Steer Axle w/ ltd slip for tires (037); 8-spool valve (077)	**$2,747.00**
☑ 3" Seat Belt (105)	**$23.00**
☑ Highway Safety Lights (2 Post ROPS) (100)	**$574.00**
☑ Cold Start Kit (Ether Assist) (101)	**$180.00**
☑ SMV Sign (102)	**$31.00**
☑ Canopy w/o Light (103) (not available w/ VPX455 Plow)	**$375.00**
☑ Hydraulic Cold Start Bypass (107)	**$549.00**
☑ Front Tie-Down Bracket (113) (if not equipped with backhoe or weight kit)	**$84.00**
☑ Extension - Trench Cleaner Hoses (hyd) (495) (use w/ SO455)	**$65.00**
☑ Miscellaneous Features: sales code _ _ _	**$_____.___**
NOTE: Check counterweight chart for appropriate weight and tire configurations	
Extended Warranty: (choose one)	
☑ 2 Year Parts & Labor Warranty (PL2)	**$805.00**
☑ 3 Year Parts & Labor Warranty (PL3)	**$2,147.00**
☑ Preventive Maintenance Package	**$_____.___**

Subtotal: _____
Dealer Freight & Prep: _____
Quantity: _____
Total: _____
Enter Sales Tax %: _____ **Sales Tax:** _____

Grand Total: _____

ACCEPTED:

Vermeer
BY: _____
DATE: _____

Customer
BY: _____
DATE: _____

Pricing effective 06/01/13
NOTE: All pricing in USD $
NOTE: Include applicable sales tax
Quotes valid for 30 days

Any applicable sales tax is not included. Prices subject to change without notice. These prices are exclusive of any and all duties, import fees, taxes, or other similar charges. These prices may not be available in any transaction involving a trade or rental transaction. This sheet may not include all possible specifications available with this model. For complete product specifications, please contact your local authorized Vermeer dealer. Unless otherwise noted, dealer freight & prep to be determined.

2013 Vermeer Global Account Pricing
National Joint Powers Alliance ® (NJPA)

☐ **QUOTE**
☐ **ORDER**

RT60 - 5.5 hp Walk-Behind Trencher

Basic Unit	
RT60 Trencher w/ 5.5 hp Honda gas engine, ground drive assist, tach / hourmeter, 12" boom (002), 3" welded shark chain (2060SWS03036) **For additional options, see "Optional Features" section below.**	
Basic Unit Price:	**$2,879.00**

Optional Features:	**Add to Basic Unit Price:**
☑ 18" Boom (004) w/ 3" Welded Shark Chain (2060SWS03046)	**$189.00**

Subtotal: _____
Dealer Freight & Prep: _____
Quantity: _____

Total: _____
Enter Sales Tax %: _____ **Sales Tax:** _____

Grand Total: _____

Pricing effective 06/01/13
NOTE: All pricing in USD $
NOTE: Include applicable sales tax
Quotes valid for 30 days

ACCEPTED:

Vermeer
BY: _____
DATE: _____

Customer
BY: _____
DATE: _____

Any applicable sales tax is not included. Prices subject to change without notice. These prices are exclusive of any and all duties, import fees, taxes, or other similar charges. These prices may not be available in any transaction involving a trade or rental transaction. This sheet may not include all possible specifications available with this model. For complete product specifications, please contact your local authorized Vermeer dealer. Unless otherwise noted, dealer freight & prep to be determined.

2013 Vermeer Global Account Pricing
National Joint Powers Alliance ® (NJPA)

☐ QUOTE
☐ ORDER

RTX100 13 hp Walk-Behind Trencher

Basic Unit

RTX100 Trencher w/ 13 hp Honda gas engine, VZ steering system, trencher drive motor, hourmeter (001); 18x9.5-8 lug tires (qty of 2) (040)

Add trencher boom & cutter set up and restraint bar combination from table below.

For additional options, see "Optional Features" section below.

☑ **Basic Unit Price: $7,924.00**

Required Features: Please add boom, cutter setup, and restraint bar from table below.

(If desired combination not shown, please consult your local Vermeer Dealer for pricing & specs)

Price includes boom, 2250 chain, cutters, restraint bar & greaseless E.I.							
Boom / Cutter Width	Partial Cup	Full Cup	Tiger Cup Combo	Rotary Combo	Welded Shark	Shark Combo	
24" - 4"	$754.00	$859.00	$1,013.00	$1,060.00	$946.00	$912.00	**Enter Chain Price Below:**
24" - 5"	$759.00	$849.00	$1,003.00	$1,071.00	$972.00	$923.00	
24" - 6"	$778.00	$906.00	$1,055.00	$1,081.00	$998.00	$947.00	
30" - 4"	$831.00	$951.00	$1,119.00	$1,192.00	$1,053.00	$1,004.00	**Enter Trench Cleaner Price Below:**
30" - 5"	$826.00	$941.00	$1,140.00	$1,209.00	$1,083.00	$1,035.00	
30" - 6"	$867.00	$1,000.00	$1,198.00	$1,226.00	$1,112.00	$1,058.00	
36" - 4"	$1,034.00	$1,170.00	$1,355.00	$1,432.00	$1,290.00	$1,232.00	
36" - 5"	$1,028.00	$1,159.00	$1,377.00	$1,448.00	$1,324.00	$1,257.00	**Enter Ext Plate Price Below:**
36" - 6"	$1,067.00	$1,227.00	$1,440.00	$1,466.00	$1,358.00	$1,293.00	
Trench Cleaner	24" Boom	30" Boom	36" Boom	4" Extension Plate (330)		$24.00	
	$146.00	$152.00	$160.00	6" Extension Plate (331)		$25.00	

Optional Features:	**Add to Basic Unit Price:**
☑ 13 hp Honda gas engine w/ electric start (002)	**$468.00**
☑ 14 hp Kohler CH440 gas engine w/ recoil (004)	**-$268.00**
☑ 14 hp Kohler CH440 gas engine w/ electric start (005)	**$95.00**
☑ 7" Track Drive Assembly (qty of 2) (041), in lieu of tires (040)	**$1,563.00**
☑ Greaseable 7" End Idler (404) (Replaces greaseless in above table)	**$13.00**
☑ Adjustable Backfill Blade (AB26) (201)	**$508.00**
☑ Miscellaneous Features: sales code _ _ _	**$_____.___**
Extended Warranty: (choose one)	
☑ 2 Year Parts & Labor Warranty (PL2)	**$466.00**
☑ 3 Year Parts & Labor Warranty (PL3)	**$745.00**
☑ Preventive Maintenance Package	**$_____.___**

TLR30 Trailer

☑ TLR30-LD Trailer (single axle), 2,200 lb. GVW, tilt bed, skid resistant floor, pan-style bed w/ 5.5" sidewalls, P165/80R13 tires, 13"x5" 5-bolt spoked white rims, rubber torsion suspension, 2" ball hitch (TLR30002); brakes not included - ADD BINDER OPTION FROM OPTIONS BELOW	**$1,654.00**
Add for Trailer Options:	
☑ TLR30-HD (heavy duty) Trailer, 3500 lb. GVW (001) (Replaces 002)	**$190.00**
☑ 4-Point Binder / Chain Tiedown (251) (dealer installed)	**$188.00**
☑ Chainless Tiedown System (252)	**$297.00**
☑ Spare Tire Carrier (255) (spare tire not included)	**$124.00**
☑ Spare Tire & Wheel Assembly (part # 237320001) - must be ordered thru Parts Dept	**$134.00**

RTX100 Trencher Subtotal: _____
TLR30 Trailer Subtotal: _____
Dealer Freight & Prep: _____
Quantity: _____
Total: _____
Enter Sales Tax %: _____ **Sales Tax:** _____

Grand Total: _____

Pricing effective 06/01/13
NOTE: All pricing in USD $
NOTE: Include applicable sales tax
Quotes valid for 30 days

ACCEPTED:

Vermeer
BY: _____
DATE: _____

Customer
BY: _____
DATE: _____

Any applicable sales tax is not included. Prices subject to change without notice. These prices are exclusive of any and all duties, import fees, taxes, or other similar charges. These prices may not be available in any transaction involving a trade or rental transaction. This sheet may not include all possible specifications available with this model. For complete product specifications, please contact your local authorized Vermeer dealer. Unless otherwise noted, dealer freight & prep to be determined.

2013 Vermeer Global Account Pricing ☐ **QUOTE**
National Joint Powers Alliance ® (NJPA) ☐ **ORDER**

McLaughlin Vacuum Excavation Systems

VSK100G, VSK100D, V250D and VSK250D

☑	VSK100G - 8040150 - 100 gallon spoil tank, 24 hp Honda gas engine, 12 gallon fuel tank, 575 CFM, 3 stage filtration using cyclonic separator and 2 micron washable poly filter, 4 GPM @ 3000 psi adjustable high pressure water system, 50 gallon water tank, full debris tank electronic float shut down, one 16'x3" vacuum hose, 5' one man reduction tool, 5' vacuum tool, wash wand and tool holder. Single skid mount. Empty weight 1,480 lbs.	**$16,732.00**
☑	VSK100D - 8040151 - 100 gallon spoil tank, 31 hp water-cooled Yanmar diesel engine, insulated lockable engine enclosure, 22 gallon fuel tank, 575 CFM, 3 stage filtration using cyclonic separator and 2 micron washable poly filter, 5.6 GPM @ 3000 psi adjustable high pressure water system, 100 gallon water tank, full debris tank electronic float shut down, one 16'x3" vacuum hose, rotary digging lance, 5' vacuum tool, wash wand. Single skid mount. Empty weight 2,080 lbs.	**$27,777.00**
☑	V250D - 8040600 - 250 gallon spoil tank, 31 hp water-cooled Yanmar diesel engine, insulated lockable engine enclosure, 22 gallon fuel tank, 575 CFM, 3-stage filtration using cyclonic separator and 2 micron washable poly filter, 5.6 GPM @ 3000 psi adjustable high pressure water system w/ auto throttle, two 50 gallon water tanks, full debris tank electronic float shut down and secondary ball float shut off, two 10'x3" vacuum hose, rotary digging lance, 5' vacuum tool, 5' reduction tool, wash wand and tool holder. 7,000 GVW trailer.	**$34,498.00**
☑	VSK250D - 8040342 - 250 gallon spoil tank, 31 hp water-cooled Yanmar diesel engine, insulated lockable engine enclosure, 22 gallon fuel tank, 575 CFM, 3 stage filtration using cyclonic separator and 2 micron washable poly filter, 5.6 GPM @ 3000 psi adjustable high pressure water system w/ auto throttle, 100 gallon water tank, full debris tank electronic float shut down and secondary ball float shut off, two 10'x3" vacuum hose, rotary digging lance, 5' vacuum tool, 5' reduction tool, wash wand and tool holder. Single skid mounted. Empty weight 3,600 lbs.	**$32,336.00**

Optional Vacuum Features for Above Units

☑	Chute for VSK100G or VSK100D - 8040255	**$362.00**
☑	4" Drain Valve Cap - 8041516	**$132.00**
☑	Arrow Board - 8034190 (not available on VSK100's)	**$1,213.00**
☑	5' "One Man" 4 Nozzle Reduction Tool - 1 piece - 8043115	**$559.00**

V500G, V800G, V1200G

☑	V500G - 8046271 - 500 gallon spoil tank, 24 hp Honda gas engine, 14 gallon fuel tank, 575 CFM, 3 stage filtration using cyclonic separator and 2 micron washable poly filter, full debris tank electronic float shut down and secondary ball float shut off, 3" gate valve, 6" drain valve, 5' vacuum tool, two 10' x 3" vacuum hose sections. 9,999 GVW trailer.	**$27,119.00**
☑	Skid Unit Deduct	**-$2,256.00**
☑	V800G - 8040750 - 800 gallon spoil tank, 24 hp Honda gas engine, 14 gallon fuel tank, 575 CFM, 3 stage filtration using cyclonic separator and 2 micron washable poly filter, full debris tank electronic float shut down and secondary ball float shut off, 3" gate valve, 6" drain valve, 5' vacuum tool, two 10' x 3" vacuum hose sections. 12,000 GVW trailer.	**$28,068.00**
☑	Skid Unit Deduct	**-$2,444.00**
☑	V1200G - 8048369 - 1200 gallon spoil tank w/ hydraulic door, 24 hp Honda gas engine, 14 gallon fuel tank, 575 CFM, 3 stage filtration using cyclonic separator and 2 micron washable poly filter, full debris tank electronic float shut down and secondary ball float shut off, 3" gate valve, 6" drain valve, 5' vacuum tool, two 10' x 3" vacuum hose sections. 16,000 GVW trailer.	**$34,545.00**
☑	Skid Unit Deduct	**-$3,384.00**

Optional Vacuum Features for Above Units

☑	Reverse Flow (requires 8041700) - 8044633	**$1,123.00**
☑	External Hydraulic Door - 8041700	**$3,431.00**
☑	Arrow Board - 8034190	**$1,213.00**
☑	6" Drain Valve Cap Assembly - 8046275	**$179.00**
☑	5' "One Man" 4 Nozzle Reduction Tool - 1 piece - 8043115	**$559.00**
☑	V500 Strong Arm - 8047104	**$1,419.00**
☑	V800 Strong Arm - 8047228	**$1,513.00**
☑	Mount Unit to Truck - 8048394	**$1,128.00**
☑	Flat Truck Deck 500, 800, 1200 - 8048395	**$7,990.00**

Trailer Options for Above Units

☑	Surge Brakes 7-14K - 8040790	**$1,387.00**
☑	Hydraulic Jack - 8041127	**$1,852.00**
☑	Two Speed Jack - 8043786	**$658.00**
☑	LED Trailer Light Kit - 8042236	**$221.00**

V500LEG, V500LEG-250 and V1200LEG

☑	V500LEG - 8045230 - 500 gallon spoil tank, 31 hp Briggs & Stratton gas engine, 14 gallon fuel tank, 575 CFM, 3 stage filtration using cyclonic separator and 2 micron washable poly filter, 4 GPM @ 3000 psi adjustable high pressure water system, two 50 gallon water tanks, full debris tank electronic float shut down and secondary ball float shut off, three 10' x 3" vacuum hose, rotary digging lance, 5' vacuum tool, wash wand. 9,999 GVW trailer.	**$32,195.00**
☑	V500LEG - 250 - 8045231 - 500 gallon spoil tank, 31 hp Briggs & Stratton gas engine, 14 gallon fuel tank, 575 CFM, 3 stage filtration using cyclonic separator and 2 micron washable poly filter, 4 GPM @ 3000 psi adjustable high pressure water system, two 125 gallon water tanks, full debris tank electronic float shut down and secondary ball float shut off, three 10' x 3" vacuum hose, rotary digging lance, 5' vacuum tool, wash wand. 9,999 GVW trailer.	**$32,900.00**
☑	V1200LEG - 8048377 - 1200 gallon spoil tank w/ hydraulic door, 31 hp Briggs & Stratton gas engine, 14 gallon fuel tank, 575 CFM, 3 stage filtration using cyclonic separator and 2 micron washable poly filter, 4 GPM @ 3000 psi adjustable high pressure water system, two 50 gallon water tanks, full debris tank electronic float shut down and secondary ball float shut off, three 10' x 3" vacuum hose, rotary digging lance, 5' vacuum tool, wash wand. 18,000 GVW trailer.	**$37,271.00**

Optional Vacuum Features for Above Units

☑	Reverse Flow (requires 8041700) - 8044633	**$1,128.00**
☑	External Hydraulic Door - 8041700	**$3,431.00**
☑	Arrow Board - 8034190	**$1,213.00**
☑	6" Drain Valve Cap Assembly - 8046275	**$179.00**
☑	5' "One Man" 4 Nozzle Reduction Tool - 1 piece - 8043115	**$559.00**
☑	V500 Strong Arm - 8047104	**$1,419.00**
☑	V800 Strong Arm - 8047228	**$1,513.00**

Trailer Options for Above Units

☑	Surge Brakes 7-14K - 8040790	**$1,387.00**
☑	Hydraulic Jack - 8041127	**$1,852.00**
☑	Two Speed Jack - 8043786	**$658.00**
☑	LED Trailer Light Kit - 8042236	**$221.00**

V500LE and V500LE-LT

☑	V500LE - 8045229 - 500 gallon spoil tank, 31 hp water-cooled Yanmar diesel engine, insulated lockable engine enclosure, 22 gallon fuel tank, 575 CFM, 3 stage filtration using cyclonic separator and 2 micron washable poly filter, 5.6 GPM @ 3000 psi adjustable high pressure water system, two 125 gallon water tanks, full debris tank electronic float shut down and secondary ball float shut off, full open external hydraulic door with separate door/tank raise circuit, In Tank Clean Out System, 50’ water hose w/ reel, three 10' x 3" vacuum hose, rotary digging lance, 5’ vacuum tool, wash wand. 12,000 GVW trailer.	**$41,971.00**
☑	V500LE-LT - 8043832 - 500 gallon spoil tank, 31 hp water-cooled Yanmar diesel engine, insulated lockable engine enclosure, 22 gallon fuel tank, 575 CFM, 3 stage filtration using cyclonic separator and 2 micron washable poly filter, 5.6 GPM @ 3000 psi adjustable high pressure water system, two 50 gallon water tanks, full debris tank electronic float shut down and secondary ball float shut off, full open external hydraulic door w/ separate door/tank raise circuit, In Tank Clean Out System, 50’ water hose w/ reel, three 10' x 3" vacuum hose, rotary digging lance, 5’ vacuum tool, wash wand. 9,999 GVW trailer.	**$41,595.00**

Optional Vacuum Features for Above Units

☑	Reverse Flow (requires 8041700) - 8044633	**$1,128.00**
☑	Hot Box - 8047057	**$4,653.00**
☑	Arrow Board - 8034190	**$1,213.00**
☑	6" Drain Valve Cap Assembly - 8046275	**$179.00**
☑	Additional 10'x3" Hose w/ Storage Tube (2 possible) - 8041575	**$367.00**
☑	Automatic Throttle - 8046274	**$155.00**
☑	5' "One Man" 4 Nozzle Reduction Tool - 1 piece - 8043115	**$559.00**
☑	V500 Strong Arm - 8047104	**$1,419.00**

Trailer Options for Above Units

☑	Surge Brakes 7-14K - 8040790	**$1,387.00**
☑	Hydraulic Jack - 8041127	**$1,852.00**
☑	Two Speed Jack - 8043786	**$658.00**
☑	LED Trailer Light Kit - 8042236	**$221.00**

V500LE-HD and V500LE-LTHD

☑	V500LE-HD - 8046266 - 500 gallon spoil tank, 49 hp Kubota diesel engine, 22 gallon fuel tank, 1025 CFM, 3 stage filtration using dual cyclonic separator and 2 micron washable poly filter, 5.6 GPM @ 3000 psi adjustable high pressure water system, two 125 gallon water tanks, full debris tank electronic float shut down and secondary ball float shut off, full open external hydraulic door w/ separate door/tank raise circuit, In Tank Clean Out System, 50' water hose w/ reel, three 10' x 4" vacuum hose, rotary digging lance, 5' vacuum tool, wash wand. 12,000 GVW trailer.	**$47,564.00**
☑	For Boom Option - upgrade to 14,000 GVW Trailer	**$799.00**
☑	V500LE-LTHD - 8046265 - 500 gallon spoil tank reduced to 400 gallons, 49 hp Kubota diesel engine, 22 gallon fuel tank, 1025 CFM, 3 stage filtration using dual cyclonic separator and 2 micron washable poly filter, 5.6 GPM @ 3000 psi adjustable high pressure water system, two 50 gallon water tanks, full debris tank electronic float shut down and secondary ball float shut off, full open external hydraulic door w/ separate door/tank raise circuit, In Tank Clean Out System, 50' water hose w/ reel, three 10' x 4" vacuum hose, rotary digging lance, 5' vacuum tool, wash wand. 9,999 GVW trailer. (No Boom Option)	**$47,188.00**

Optional Vacuum Features for Above Units

☑	Reverse Flow HD - 8041703	**$1,316.00**
☑	Hot Box - 8047057	**$4,653.00**
☑	Arrow Board - 8034190	**$1,213.00**
☑	6" Drain Valve Cap Assembly - 8046275	**$179.00**
☑	Additional 10'x4" Hose w/ Storage Tube (2 possible) - 8041577	**$494.00**
☑	Automatic Throttle - 8046274	**$155.00**
☑	3" Hose Substitution for 4" Hose - 8043810	**$0.00**
☑	Hydraulic Boom - manual rotation, wireless remote, two 5' boom extensions - 8042201	**$11,891.00**
☑	Aux Hydraulic System - 8 GPM @ 2000 psi (not available on V500LE-LTHD) - 8030223	**$3,469.00**
☑	5' "One Man" 4 Nozzle Reduction Tool - 1 piece - 8043115	**$559.00**
☑	V500 Strong Arm - 8047104	**$1,419.00**

Trailer Options for Above Units

☑	Surge Brakes 7-14K - 8040790	**$1,387.00**
☑	Hydraulic Jack - 8041127	**$1,852.00**
☑	Two Speed Jack - 8043786	**$658.00**
☑	LED Trailer Light Kit - 8042236	**$221.00**

V800LE - 250 and V800LE - 410

☑	V800LE - 250 - 8046267 - 800 gallon spoil tank, 31 hp water-cooled Yanmar diesel engine, insulated lockable engine enclosure, 22 gallon fuel tank, 575 CFM, 3 stage filtration using dual cyclonic separator and 2 micron washable poly filter, 5.6 GPM @ 3000 psi adjustable high pressure water system, two 125 gallon water tanks, full debris tank electronic float shut down and secondary ball float shut off, full open external hydraulic door w/ separate door/tank raise circuit, In Tank Clean Out System, 50' water hose w/ reel, three 10' x 3" vacuum hose, rotary digging lance, 5' vacuum tool, wash wand. 16,000 GVW trailer.	**$49,350.00**
☑	V800LE - 410 - 8046268 - 800 gallon spoil tank, 31 hp water-cooled Yanmar diesel engine, insulated lockable engine enclosure, 22 gallon fuel tank, 575 CFM, 3 stage filtration using cyclonic separator and 2 micron washable poly filter, 5.6 GPM @ 3000 psi adjustable high pressure water system, two 205 gallon water tanks, full debris tank electronic float shutdown and secondary ball float shutoff, full open external hydraulic door w/ separate door/tank raise circuit, In Tank Clean Out System, 50' water hose w/ reel, three 10'x3" vacuum hose, rotary digging lance, 5' vacuum tool, wash wand. 16,000 GVW trailer.	**$50,995.00**

Optional Vacuum Features for Above Units

☑	Reverse Flow (requires 8041700) - 8044633	**$1,128.00**
☑	Hot Box - 8047057	**$4,653.00**
☑	Arrow Board - 8034190	**$1,213.00**
☑	6" Drain Valve Cap Assembly - 8046275	**$179.00**
☑	Additional 10'x3" Hose w/ Storage Tube (2 possible) - 8041575	**$367.00**
☑	Automatic Throttle - 8046274	**$155.00**
☑	5' "One Man" 4 Nozzle Reduction Tool - 1 piece - 8043115	**$559.00**
☑	V800 Strong Arm - 8047228	**$1,513.00**

Trailer Options for Above Units

☑	Surge Brakes 16-20K - 8046661	**$2,021.00**
☑	Hydraulic Jack - 8041127	**$1,852.00**
☑	Two Speed Jack - 8043786	**$658.00**
☑	LED Trailer Light Kit - 8042236	**$221.00**

V800LE-HD - 250 and V800LE-HD - 410

☑	V800LE-HD - 250 - 8046269 - 800 gallon spoil tank, 49 hp Kubota diesel engine, 22 gallon fuel tank, 1025 CFM, 3 stage filtration using dual cyclonic separator and 2 micron washable poly filter, 5.6 GPM @ 3000 psi adjustable high pressure water system, two 125 gallon water tanks, full debris tank electronic float shut down and secondary ball float shut off, full open external hydraulic door w/ separate door/tank raise circuit, In Tank Clean Out System, 50' water hose w/ reel, three 10' x 4" vacuum hose, rotary digging lance, 5' vacuum tool, wash wand. 18,000 GVW trailer.	**$54,614.00**
☑	V800LE-HD - 410 - 8046270 - 800 gallon spoil tank, 49 hp Kubota diesel engine, 22 gallon fuel tank, 1025 CFM, 3 stage filtration using dual cyclonic separator and 2 micron washable poly filter, 5.6 GPM @ 3000 psi adjustable high pressure water system, two 205 gallon water tanks, full debris tank electronic float shutdown and secondary ball float shutoff, full open external hydraulic door w/ separate door/tank raise circuit, In Tank Clean Out System, 50' water hose w/ reel, three 10'x4" vacuum hose, rotary digging lance, 5' vacuum tool, wash wand. 18,000 GVW trailer.	**$57,246.00**

Optional Vacuum Features for Above Units

☑	Reverse Flow HD - 8041703	**$1,316.00**
☑	Hot Box - 8047057	**$4,653.00**
☑	Arrow Board - 8034190	**$1,213.00**
☑	6" Drain Valve Cap Assembly - 8046275	**$179.00**
☑	Additional 10'x4" Hose w/ Storage Tube (2 possible) - 8041577	**$494.00**
☑	3" Hose Substitution for 4" Hose - 8043810	**$0.00**
☑	Automatic Throttle - 8046274	**$155.00**
☑	Hydraulic Boom - manual rotation, wireless remote, two 5' boom extensions - 8042201	**$11,891.00**
☑	Aux Hydraulic System - 8 GPM @ 2000 psi (not available on V500LE-LTHD) - 8030223	**$3,469.00**
☑	5' "One Man" 4 Nozzle Reduction Tool - 1 piece - 8043115	**$559.00**
☑	V800 Strong Arm - 8047228	**$1,513.00**

Trailer Options for Above Units

☑	Surge Brakes 16-20K - 8046661	**$2,021.00**
☑	Hydraulic Jack - 8041127	**$1,852.00**
☑	Two Speed Jack - 8043786	**$658.00**
☑	LED Trailer Light Kit - 8042236	**$221.00**
☑	Miscellaneous Features: sales code _ _ _	**$_____.___**

Subtotal: _____

Dealer Freight & Prep: _____

Quantity: _____

Total: _____

Enter Sales Tax %: _____ **Sales Tax:** _____

Grand Total: _____

ACCEPTED:

Vermeer
BY: _____
DATE: _____

Customer
BY: _____
DATE: _____

Pricing effective 06/01/13
NOTE: All pricing in USD $
NOTE: Include applicable sales tax
Quotes valid for 30 days

Any applicable sales tax is not included. Prices subject to change without notice. These prices are exclusive of any and all duties, import fees, taxes, or other similar charges. These prices may not be available in any transaction involving a trade or rental transaction. This sheet may not include all possible specifications available for this model. For complete product specifications, please contact your local authorized Vermeer dealer. Unless otherwise noted, dealer freight & prep to be determined.

Vermeer