Delaware Technical Community College

Owens Campus Carter Center

Fume Hood Ventilation System

Georgetown, Delaware

PROJECT MANUAL

Bid Documents

GIPE ASSOCIATES, INC. PROJECT: 14092

May 11, 2018

Gipe Associates, Inc.
CONSULTING ENGINEERS
Mechanical | Electrical | Plumbing

8719 Brooks Drive
Post Office Box 1147
Easton, Maryland 21601
(410) 822-8688

TABLE OF CONTENTS

OF THE PROJECT MANUAL

FOR

DELAWARE TECHNICAL COMMUNITY COLLEGE
OWENS CAMPUS CARTER CENTER FUME HOOD VENTILATION SYSTEM

GEORGETOWN, SUSSEX COUNTY, DELAWARE
BID DOCUMENTS
May 11, 2018

GIPE ASSOCIATES PROJECT No.: 14092

The arrangement of the Project Manual has been established based on the MASTERFORMAT (2004) of The Construction SPECIFICATIONS INSTITUTE. The following Table of Contents lists certain Bidding and Contract Documents (including Specification Sections of Division 01 through 33) contained in this Project Manual.

TABLE OF CONTENTS

000015 LIST OF DRAWINGS

DIVISION 00 CHAPTER # I BIDDING REQUIREMENTS
001000 BID INVITATION
002000 INSTRUCTION TO BIDDERS
(AIA Document A701-1997 Edition)
002100 SUPPLEMENTARY INSTRUCTIONS TO BIDDERS
(State of Delaware Bid Bond)
003000 INFORMATION TO BIDDERS
(Existing TAB Survey Information)
004100 BID FORM
004350 SUBCONTRACTOR'S/MANUFACTURER'S LISTING FORM
004500 AFFIDAVIT OF QUALIFICATION TO BID
004600 AFFIDAVIT I NON-COLLUSION CERTIFICATE
004700 AFFIDAVIT II DISCLOSURE OF INTEREST BY PERSONS DOING BUSINESS WITH DELAWARE TECHNICAL COMMUNITY COLLEGE
004900 BIDDING ADDENDA FORMAT

DIVISION 00 CHAPTER #2 CONTRACTING REQUIREMENTS
005000 STANDARD FORM OF AGREEMENT BETWEEN CONTRACTOR AND OWNER
(AIA Document A101 – 2007 Edition)

(DTCC A101 Amendment)
005600 CONTRACTOR'S QUALIFICATION STATEMENTS
(AIA Document A305 – 1986 Edition)
007000 GENERAL CONDITIONS OF CONTRACT FOR CONSTRUCTION
(AIA Document A201-2007 Edition)
008000 SUPPLEMENTARY GENERAL CONDITIONS OF CONTRACT FOR CONSTRUCTION
(AIA A312 Performance Bond- Payment Bond)
008114 DRUG TESTING FORMS
(Drug Testing Report Forms)
009100 PREVAILING WAGE
(Prevailing Wages as provided by the State of Delaware)

SPECIFICATIONS

DIVISION 01 GENERAL REQUIREMENTS

011000 SUMMARY OF WORK
011400 WORK RESTRICTIONS
012500 SUBSTITUTION PROCEDURES
(CSI Form 13.1A – Substitution Request)
012600 CONTRACT MODIFICATION PROCEDURES
(AIA G701-Change Order - 2000 Edition)
(AIA G709 Proposal Request - 1993 Edition)
(AIA G710 Architect's Supplemental Instructions – 1992 Edition)
(AIA G714 Construction Change Directive – 1987 Edition)
012900 PAYMENT PROCEDURE
(AIA G702 Application and Certification for Payment – 1992 Edition)
(AIA G703 Continuation Sheet – 1992 Edition)
(AIA G706 Contractor's Affidavit of Payment of Debts and Claims– 1994 Edition)
(AIA G706A Contractor's Affidavit of Release of Liens – 1994 Edition)
(AIA G707 Consent of Surety To Final Payment – 1994 Edition)
013100 PROJECT MANAGEMENT AND COORDINATION
013200 CONSTRUCTION PROGRESS DOCUMENTATION
(AIA G716-2004 Request for Information)
013300 SUBMITTAL PROCEDURES
(CSI 12.1A Submittal Transmittal – 1996 Edition)
(Gipe Associates, Inc. Release of Electronic Media Form)
014000 QUALITY REQUIREMENTS
015000 TEMPORARY FACILITIES AND CONTROLS
016000 PRODUCT REQUIREMENTS
(CSI 13.1A Substitution Request Form – 1996 Edition)
017300 EXECUTION REQUIREMENTS
017310 CUTTING AND PATCHING
017320 SELECTIVE DEMOLITION
017700 CLOSEOUT PROCEDURES
(CSI 14.1A Punch List Form – 1996 Edition)

017823 OPERATION AND MAINTENANCE DATA
017839 PROJECT RECORD DOCUMENTS
017900 DEMONSTRATION AND TRAINING
019113 GENERAL COMMISSIONING REQUIREMENTS
019115 HVAC COMMISSIONING REQUIREMENTS

DIVISION 07 THERMAL AND MOISTURE PROTECTION
078413 FIRE PROTECTION, HVAC & PLUMBING PENETRATION FIRESTOPPING

DIVISION 23 HEATING VENTILATING AND AIR CONDITIONING
230500 COMMON WORK RESULTS FOR HVAC
230505 HVAC PIPING, FITTING AND VALVES
230548 VIBRATION CONTROLS FOR HVAC, PLUMBING & FIRE PROTECTION EQUIPMENT
230593 TESTING, ADJUSTING & BALANCING FOR HVAC AND PLUMBING
230600 HEATING, VENTILATING, AND AIR CONDITIONING EQUIPMENT
230701 HVAC INSULATION
230900 INSTRUMENTATION AND CONTROLS OF HVAC & PLUMBING SYSTEMS
233000 HVAC AIR DISTRIBUTION

DIVISION 26 ELECTRICAL
260500 COMMON WORK RESULTS FOR ELECTRICAL
260519 CONDUCTORS AND CABLES
260520 ELECTRICAL HEATING CABLES
260526 GROUNDING AND BONDING
260528 ELECTRICAL FIRESTOPPING
260529 HANGERS AND SUPPORTS
260533 RACEWAYS AND BOXES
260534 SURFACE METAL RACEWAY
260553 ELECTRICAL IDENTIFICATION
262726 WIRING DEVICES
262813 FUSES
262816 DISCONNECT SWITCHES
262913 MOTOR CONTROLLERS
264113 LIGHTNING PROTECTION SYSTEM

DIVISION 28 ELECTRONIC SAFETY AND SECURITY
280500 COMMON WORK RESULTS FOR ELECTRONIC SAFETY AND SECURITY
283112 FIRE ALARM SYSTEM – EXISTING SYSTEM EXPANSION

NOTE ATTACHMENT FORMS ARE INDICATED IN PARENTHESIS ( )

END OF CONTENTS

SECTION 001000: BID INVITATION

PART 1 GENERAL

1.1 DESCRIPTION

A. Copy of the Bid Invitation Form is bound herein.

PART 2 PRODUCTS

NOT USED

PART 3 EXECUTION

NOT USED

END OF SECTION

DELAWARE TECHNICAL COMMUNITY COLLEGE
OWENS CAMPUS CARTER CENTER FUME HOOD VENTILATION SYSTEM
PUBLIC NOTICE
INVITATION TO BIDDERS

TITLE: DELAWARE TECHNICAL COMMUNITY COLLEGE, OWENS CAMPUS
CARTER CENTER HOOD, GEORGETOWN, SUSSEX COUNTY, DELAWARE

Sealed Bids for this project shall be accepted by Delaware Technical Community College, c/o LeFeisha Cannon, Business Manager, 21179 College Drive, Georgetown, Delaware 19947, Jack F. Owens Campus, until 1:00 p.m. local time on Wednesday, June 21, 2018, at which time they shall be opened and read aloud.

The Scope of Work under this contract includes all plant, labor, materials, tools, equipment, superintendence, transportation and performing all work in strict accordance with the Specifications and Drawings for the replacement of fume hood exhaust fans, terminal units and ductwork. Electrical work shall support the demolition and new work indicated for the fume hood exhaust system. All work shall commence on the date of issuance of the Notice to Proceed and shall be completed and operational within one hundred eighty (180) calendar days thereafter.

All Bids shall be Lump Sum Amount. Each Bid shall be accompanied by a Bid Guaranty, which shall be either a certified check made payable to the Delaware Technical Community College or a Bond in a form and by a Surety company approved by Delaware Technical Community College in the amount of ten percent (10%) of the Bid amount. All responsive Bids shall be held valid for at least ninety (90) calendar days after the Bid Opening date.
All Bids shall be enclosed in a sealed envelope with the name of the project clearly identified on the outside of the envelope.

Bidding Documents may be examined at the following locations:

Gipe Associates, Inc.
8719 Brooks Drive
Easton, Maryland 21601
(410) 822-8688

Contractors that intend to submit an aggregate bid may obtain a maximum of three (3) sets of drawings and specifications from Gipe Associates, Inc. upon a non-refundable cost of $100.00 per hardcopy set or $50.00 for an electronic set. Checks shall be made payable to the Gipe Associates, Inc. Bidding Documents will be available for purchase at the Pre-Bid Conference and Gipe Associates, Inc. thereafter.

All contractors are subject to state-mandated prevailing wage rates**.**

Contractors that intend to submit a bid for the project shall obtain their drawings and specifications only from Gipe Associates, Inc., who will be maintaining a bidder list for review by other bidders, subcontractors, and suppliers. Only bidders identified on the list shall receive copy of addenda, clarifications, or other bid revisions.

A MANDATORY Pre-Bid Conference will be conducted on Tuesday, June 5, 2018, at 9:00 a.m. at the Delaware Technical Community College, Owens Campus, Administrative Services Building, Room 1303, 21179 College Drive, Georgetown, Delaware 19947.

Sealed bids shall be addressed to the DTCC, Department of Administrative Services, Delaware Technical Community College, Owens Campus, Georgetown, Delaware. The outer envelope should clearly indicate: "DTCC Owens Campus Carter Center Fume Hood Ventilation System, Delaware Technical Community College, Owens Campus, Georgetown, Delaware." Minority Business Enterprises (MBE), Disadvantaged Business Enterprises (DBE),

and Women-Owned Business Enterprises (WBE) will be afforded full opportunity to submit bids on this contract and will not be subject to discrimination of the basis of race, color, national origin or sex in consideration of this award. A Bid Security in the amount of 10% of the Base Bid plus the amount of all additive alternates must accompany each bid. The Owner reserves the right to reject any or all bids and to waive any informalities therein. The Owner may extend the time and place for the opening of the bids from that described in the advertisement, with not less than two (2) calendar days' notice by certified delivery, facsimile machine or electronic means to those bidders receiving plans.

SECTION 002000: INSTRUCTIONS TO BIDDERS

PART 1 GENERAL

1.1 DESCRIPTION

A. The Instructions to Bidders, AIA Document A701, 1997 edition, as modified.

B. Copy of AIA Document A701 - 1997 editions bound herein.

C. Supplementary Instructions to Bidders as attached in Section 002100.

PART 2 PRODUCTS

NOT USED

PART 3 EXECUTION

NOT USED

END OF SECTION

1997 Edition -Electronic Format

AIA Document A701 - 1997

Instructions to Bidders

TABLE OF ARTICLES

1. DEFINITIONS
2. BIDDER'S REPRESENTATIONS
3. BIDDING DOCUMENTS
4. BIDDING PROCEDURES
5. CONSIDERATION OF BIDS
6. POST-BID INFORMATION
7. PERFORMANCE BOND AND PAYMENT BOND
8. FORM OF AGREEMENT BETWEEN OWNER AND CONTRACTOR

THIS DOCUMENT HAS IMPORTANT LEGAL CONSEQUENCES. CONSULTATION WITH AN ATTORNEY IS ENCOURAGED WITH RESPECT TO ITS COMPLETION OR MODIFICATION. AUTHENTICATION OF THIS ELECTRONICALLY DRAFTED AIA DOCUMENT MAY BE MADE BY USING AIA DOCUMENT D401.

ARTICLE 1 DEFINITIONS

1.1 Bidding Documents include the Bidding Requirements and the proposed Contract Documents. The Bidding Requirements consist of the Advertisement or Invitation to Bid, Instructions to Bidders, Supplementary Instructions to Bidders, the bid form, and other sample bidding and contract forms. The proposed Contract Documents consist of the form of Agreement between the Owner and Contractor, Conditions of the Contract (General, Supplementary and other Conditions), Drawings, Specifications and all Addenda issued prior to execution of the Contract.

1.2 Definitions set forth in the General Conditions of the Contract for Construction, AIA Document A201, or in other Contract Documents are applicable to the Bidding Documents.

1.3 Addenda are written or graphic instruments issued by the Architect prior to the execution of the Contract which modify or interpret the Bidding Documents by additions, deletions, clarifications or corrections.

1.4 A Bid is a complete and properly executed proposal to do the Work for the sums stipulated therein, submitted in accordance with the Bidding Documents.

1.5 The Base Bid is the sum stated in the Bid for which the Bidder offers to perform the Work described in the Bidding Documents as the base, to which Work may be added or from which Work may be deleted for sums stated in Alternate Bids.

1.6 An Alternate Bid (or Alternate) is an amount stated in the Bid to be added to or deducted

©1997 AIA®
AIA DOCUMENT A701 - 1997
INSTRUCTIONS TO BIDDERS

The American Institute of Architects
1735 New York Avenue, N.W.
Washington, D.C. 20006-5292

) 1970, 1974, 1978, 1987, © 1997 by The American Institute of Architects. Reproduction of the material herein r substantial quotation of its provisions without written permission of the AIA violates the copyright laws of the n States and will subject he violator to legal prosecution. WARNING: Unlicensed photocopying violates right laws and will subject the violator to legal prosecution. This document was electronically b with permission of the AIA and can be reproduced in accordance with your license without violation ntil the date of expiration as noted below.
his document is not an original AIA® Contract Document, but a reproduction produced by AIA® ontract Documents software for administrative purposes only and is not for other use or resale.

from the amount of the Base Bid if the corresponding change in the Work, as described in the 'dding Documents, is accepted.

1.7 A Unit Price is an amount stated in the Bid as a price per unit of measurement for materials, equipment or services or a portion of the Work as described in the Bidding Documents.

1.8 A Bidder is a person or entity who submits a Bid and who meets the requirements set forth in the Bidding Documents.

1.9 A Sub-bidder is a person or entity who submits a bid to a Bidder for materials, equipment or labor for a portion of the Work.

THIS DOCUMENT HAS IMPORTANT LEGAL CONSEQUENCES. CONSULTATION WITH AN ATTORNEY IS ENCOURAGED WITH RESPECT TO ITS COMPLETION OR MODIFICATION. AUTHENTICATION OF THIS ELECTRONICALLY DRAFTED AIA DOCUMENT MAY BE MADE BY USING AIA DOCUMENT D401.

ARTICLE 2 BIDDER'S REPRESENTATIONS

2.1 The Bidder by making a Bid represents that:

2.1.1 The Bidder has read and understands the Bidding Documents or Contract Documents, to the extent that such documentation relates to the Work for which the Bid is submitted, and for other portions of the Project, if any, being bid concurrently or presently under construction.

2.1.2 The Bid is made in compliance with the Bidding Documents.

2.1.3 The Bidder has visited the site, become familiar with local conditions under which the Work is to be performed and has correlated the Bidder's personal observations with the requirements of the proposed Contract Documents.

2.1.4 The Bid is based upon the materials, equipment and systems required by the Bidding uments without exception.

ARTICLE 3 BIDDING DOCUMENTS

3.1 COPIES

3.1.1 Bidders may obtain complete sets of the Bidding Documents from the issuing office designated in the Advertisement or Invitation to Bid in the number and for the deposit sum, if ~~any, stated therein. The deposit will be refunded to Bidders who submit a bona fide Bid and~~ return the Bidding Documents in good condition within ten days after receipt of Bids. The cost of replacement of missing or damaged documents will be deducted from the deposit. A Bidder receiving a Contract award may retain the Bidding Documents and the Bidder's deposit will be refunded.

3.1.2 Bidding Documents will not be issued directly to Sub-bidders unless specifically offered in the Advertisement or Invitation to Bid, or in supplementary instructions to bidders.

3.1.3 Bidders shall use complete sets of Bidding Documents in preparing Bids; neither the Owner nor Architect assumes responsibility for errors or misinterpretations resulting from the use of incomplete sets of Bidding Documents.

3.1.4 The Owner and Architect may make copies of the Bidding Documents available on the above terms for the purpose of obtaining Bids on the Work. No license or grant of use is conferred by issuance of copies of the Bidding Documents.

©1997 AIA®

The American Institute of Architects
1735 New York Avenue, N.W.
Washington, D.C. 20006-5292

) 1970, 1974, 1978, 1987, © 1997 by The American Institute of Architects. Reproduction of the material herein r substantial quotation of its provisions without written permission of the AIA violates the copyright laws of the Init States and will subject he violator to legal prosecution. WARNING: Unlicensed photocopying violates I.S ight laws and will subject the violator to legal prosecution. This document was electronically ro with permission of the AIA and can be reproduced in accordance with your license without violation ntil the date of expiration as noted below.
his document is not an original AIA® Contract Document, but a reproduction produced by AIA® ontract Documents software for administrative purposes only and is not for other use or resale.

3.2 INTERPRETATION OR CORRECTION OF BIDDING DOCUMENTS

3.2.1 The Bidder shall carefully study and compare the Bidding Documents with each other, and with other work being bid concurrently or presently under construction to the extent that it relates to the Work for which the Bid is submitted, shall examine the site and local conditions, and shall at once report to the Architect errors, inconsistencies or ambiguities discovered.

3.2.2 Bidders and Sub-bidders requiring clarification or interpretation of the Bidding Documents shall make a written request which shall reach the Architect at least seven days prior to the date for receipt of Bids.

3.2.3 Interpretations, corrections and changes of the Bidding Documents will be made by Addendum. Interpretations, corrections and changes of the Bidding Documents made in any other manner will not be binding, and Bidders shall not rely upon them.

THIS DOCUMENT HAS IMPORTANT LEGAL CONSEQUENCES. CONSULTATION WITH AN ATTORNEY IS ENCOURAGED WITH RESPECT TO ITS COMPLETION OR MODIFICATION. AUTHENTICATION OF THIS ELECTRONICALLY DRAFTED AIA DOCUMENT MAY BE MADE BY USING AIA DOCUMENT D401.

3.3 SUBSTITUTIONS

3.3.1 The materials, products and equipment described in the Bidding Documents establish a standard of required function, dimension, appearance and quality to be met by any proposed substitution.

3.3.2 No substitution will be considered prior to receipt of Bids unless written request for approval has been received by the Architect at least ten days prior to the date for receipt of Bids. Such requests shall include the name of the material or equipment for which it is to be substituted and a complete description of the proposed substitution including drawings, performance and test data, and other information necessary for an evaluation. A statement setting forth changes in other materials, equipment or other portions of the Work, including changes in the work of other contracts that incorporation of the proposed substitution would require, shall be included. The burden of proof of the merit of the proposed substitution is upon the proposer. The Architect's decision of approval or disapproval of a proposed substitution shall be final.

3.3.3 If the Architect approves a proposed substitution prior to receipt of Bids, such approval will be set forth in an Addendum. Bidders shall not rely upon approvals made in any other manner.

3.3.4 No substitutions will be considered after the Contract award unless specifically provided for in the Contract Documents.

3.4 ADDENDA

3.4.1 Addenda will be transmitted to all who are known by the issuing office to have received a complete set of Bidding Documents.

3.4.2 Copies of Addenda will be made available for inspection wherever Bidding Documents are on file for that purpose.

3.4.3 Addenda will be issued no later than four days prior to the date for receipt of Bids except an Addendum withdrawing the request for Bids or one which includes postponement of the date for receipt of Bids.

3.4.4 Each Bidder shall ascertain prior to submitting a Bid that the Bidder has received all Addenda issued, and the Bidder shall acknowledge their receipt in the Bid.

©1997 AIA®
AIA DOCUMENT A701 - 1997
INSTRUCTIONS TO BIDDERS

The American Institute of Architects
1735 New York Avenue, N.W.
Washington, D.C. 20006-5292

1970, 1974, 1978, 1987, © 1997 by The American Institute of Architects. Reproduction of the material herein or substantial quotation of its provisions without written permission of the AIA violates the copyright laws of the United States and will subject he violator to legal prosecution. WARNING: Unlicensed photocopying violates the copyright laws and will subject the violator to legal prosecution. This document was electronically produced with permission of the AIA and can be reproduced in accordance with your license without violation until the date of expiration as noted below.
This document is not an original AIA® Contract Document, but a reproduction produced by AIA® Contract Documents software for administrative purposes only and is not for other use or resale.

'LE 4 BIDDING PROCEDURES

) PREPARATION OF BIDS

4.1.1 Bids shall be submitted on the forms included with the Bidding Documents.

4.1.2 All blanks on the bid form shall be legibly executed in a non-erasable medium.

4.1.3 Sums shall be expressed in both words and figures. In case of discrepancy, the amount written in words shall govern.

4.1.4 Interlineations, alterations and erasures must be initialed by the signer of the Bid.

4.1.5 All requested Alternates shall be bid. If no change in the Base Bid is required, enter "No Change."

4.1.6 Where two or more Bids for designated portions of the Work have been requested, the Bidder may, without forfeiture of the bid security, state the Bidder's refusal to accept award of less than the combination of Bids stipulated by the Bidder. The Bidder shall make no additional stipulations on the bid form nor qualify the Bid in any other manner.

4.1.7 Each copy of the Bid shall state the legal name of the Bidder and the nature of legal form of the Bidder. The Bidder shall provide evidence of legal authority to perform within the jurisdiction of the Work. Each copy shall be signed by the person or persons legally authorized to bind the Bidder to a contract. A Bid by a corporation shall further give the state of incorporation and have the corporate seal affixed. A Bid submitted by an agent shall have a current power of attorney attached certifying the agent's authority to bind the Bidder.

' 2 BID SECURITY

1 Each Bid shall be accompanied by a bid security in the form and amount required if stipulated in the Instructions to Bidders. The Bidder pledges to enter into a Contract with the Owner on the terms stated in the Bid and will, if required, furnish bonds covering the faithful performance of the Contract and payment of all obligations arising thereunder. Should the Bidder refuse to enter into such Contract or fail to furnish such bonds if required, the amount of the bid security shall be forfeited to the Owner as liquidated damages, not as a penalty. ~~The amount of the bid security shall not be forfeited to the Owner in the event the~~ Owner fails to comply with Paragraph 6.2.

4.2.2 If a surety bond is required, it shall be written on AIA Document A310, Bid Bond, unless otherwise provided in the Bidding Documents, and the attorney-in-fact who executes the bond on behalf of the surety shall affix to the bond a certified and current copy of the power of attorney.

4.2.3 The Owner will have the right to retain the bid security of Bidders to whom an award is being considered until either (a) the Contract has been executed and bonds, if required, have been furnished, or (b) the specified time has elapsed so that Bids may be withdrawn or (c) all Bids have been rejected.

4.3 SUBMISSION OF BIDS

4.3.1 All copies of the Bid, the bid security, if any, and any other documents required to be submitted with the Bid shall be enclosed in a sealed opaque envelope. The envelope shall be addressed to the party receiving the Bids and shall be identified with the Project name, the

THIS DOCUMENT HAS IMPORTANT LEGAL CONSEQUENCES. CONSULTATION WITH AN ATTORNEY IS ENCOURAGED WITH RESPECT TO ITS COMPLETION OR MODIFICATION. AUTHENTICATION OF THIS ELECTRONICALLY DRAFTED AIA DOCUMENT MAY BE MADE BY USING AIA DOCUMENT D401.

©1997 AIA®

The American Institute of Architects
1735 New York Avenue, N.W.
Washington, D.C. 20006-5292

1970, 1974, 1978, 1987, © 1997 by The American Institute of Architects. Reproduction of the material herein substantial quotation of its provisions without written permission of the AIA violates the copyright laws of the ni' ·tates and will subject he violator to legal prosecution. WARNING: Unlicensed photocopying violates .S ight laws and will subject the violator to legal prosecution. This document was electronically o with permission of the AIA and can be reproduced in accordance with your license without violation ntil the date of expiration as noted below.
his document is not an original AIA® Contract Document, but a reproduction produced by AIA® ontract Documents software for administrative purposes only and is not for other use or resale.

Bidder's name and address and, if applicable, the designated portion of the Work for which Bid is submitted. If the Bid is sent by mail, the sealed envelope shall be enclosed in a arate mailing envelope with the notation "SEALED BID ENCLOSED" on the face thereof.

4.3.2 Bids shall be deposited at the designated location prior to the time and date for receipt of Bids. Bids received after the time and date for receipt of Bids will be returned unopened.

4.3.3 The Bidder shall assume full responsibility for timely delivery at the location designated for receipt of Bids.

4.3.4 Oral, telephonic, telegraphic, facsimile or other electronically transmitted bids will not be considered.

THIS DOCUMENT HAS IMPORTANT LEGAL CONSEQUENCES. CONSULTATION WITH AN ATTORNEY IS ENCOURAGED WITH RESPECT TO ITS COMPLETION OR MODIFICATION. AUTHENTICATION OF THIS ELECTRONICALLY DRAFTED AIA DOCUMENT MAY BE MADE BY USING AIA DOCUMENT D401.

4.4 MODIFICATION OR WITHDRAWAL OF BID

4.4.1 A Bid may not be modified, withdrawn or canceled by the Bidder during the stipulated time period following the time and date designated for the receipt of Bids, and each Bidder so agrees in submitting a Bid.

4.4.2 Prior to the time and date designated for receipt of Bids, a Bid submitted may be modified or withdrawn by notice to the party receiving Bids at the place designated for receipt of Bids. Such notice shall be in writing over the signature of the Bidder. Written confirmation over the signature of the Bidder shall be received, and date- and time-stamped by the receiving party on or before the date and time set for receipt of Bids. A change shall be so worded as not to reveal the amount of the original Bid.

4.4.3 Withdrawn Bids may be resubmitted up to the date and time designated for the eipt of Bids provided that they are then fully in conformance with these Instructions to ders.

4.4.4 Bid security, if required, shall be in an amount sufficient for the Bid as resubmitted.

ARTICLE 5 CONSIDERATION OF BIDS

5.1 OPENING OF BIDS

~~At the discretion of the Owner, if stipulated in the Advertisement or Invitation to Bid, the~~ properly identified Bids received on time will be publicly opened and will be read aloud. An abstract of the Bids may be made available to Bidders.

5.2 REJECTION OF BIDS

The Owner shall have the right to reject any or all Bids. A Bid not accompanied by a required bid security or by other data required by the Bidding Documents, or a Bid which is in any way incomplete or irregular is subject to rejection.

5.3 ACCEPTANCE OF BID (AWARD)

5.3.1 It is the intent of the Owner to award a Contract to the lowest qualified Bidder provided the Bid has been submitted in accordance with the requirements of the Bidding Documents and does not exceed the funds available. The Owner shall have the right to waive informalities and irregularities in a Bid received and to accept the Bid which, in the Owner's judgment, is in the Owner's own best interests.

©1997 AIA®

The American Institute of Architects
1735 New York Avenue, N.W.
Washington, D.C. 20006-5292

) 1970, 1974, 1978, 1987, © 1997 by The American Institute of Architects. Reproduction of the material herein r substantial quotation of its provisions without written permission of the AIA violates the copyright laws of the ni ates and will subject he violator to legal prosecution. WARNING: Unlicensed photocopying violates ight laws and will subject the violator to legal prosecution. This document was electronically b with permission of the AIA and can be reproduced in accordance with your license without violation ntil the date of expiration as noted below.
his document is not an original AIA® Contract Document, but a reproduction produced by AIA® ontract Documents software for administrative purposes only and is not for other use or resale.

5.3.2 The Owner shall have the right to accept Alternates in any order or combination, ess otherwise specifically provided in the Bidding Documents, and to determine the low der on the basis of the sum of the Base Bid and Alternates accepted.

ARTICLE 6 POST-BID INFORMATION

6.1 CONTRACTOR'S QUALIFICATION STATEMENT

Bidders to whom award of a Contract is under consideration shall submit to the Architect, upon request, a properly executed AIA Document A305, Contractor's Qualification Statement, unless such a Statement has been previously required and submitted as a prerequisite to the issuance of Bidding Documents.

6.2 OWNER'S FINANCIAL CAPABILITY

The Owner shall, at the request of the Bidder to whom award of a Contract is under consideration and no later than seven days prior to the expiration of the time for withdrawal of Bids, furnish to the Bidder reasonable evidence that financial arrangements have been made to fulfill the Owner's obligations under the Contract. Unless such reasonable evidence is furnished, the Bidder will not be required to execute the Agreement between the Owner and Contractor.

THIS DOCUMENT HAS IMPORTANT LEGAL CONSEQUENCES. CONSULTATION WITH AN ATTORNEY IS ENCOURAGED WITH RESPECT TO ITS COMPLETION OR MODIFICATION. AUTHENTICATION OF THIS ELECTRONICALLY DRAFTED AIA DOCUMENT MAY BE MADE BY USING AIA DOCUMENT D401.

6.3 SUBMITTALS

6.3.1 The Bidder shall, as soon as practicable or as stipulated in the Bidding Documents, after notification of selection for the award of a Contract, furnish to the Owner through the Architect in writing:

- .1 a designation of the Work to be performed with the Bidder's own forces;
- .2 names of the manufacturers, products, and the suppliers of principal items or systems of materials and equipment proposed for the Work; and
- .3 names of persons or entities (including those who are to furnish materials or equipment fabricated to a special design) proposed for the principal portions of the Work.

6.3.2 The Bidder will be required to establish to the satisfaction of the Architect and Owner the reliability and responsibility of the persons or entities proposed to furnish and perform the Work described in the Bidding Documents.

6.3.3 Prior to the execution of the Contract, the Architect will notify the Bidder in writing if either the Owner or Architect, after due investigation, has reasonable objection to a person or entity proposed by the Bidder. If the Owner or Architect has reasonable objection to a proposed person or entity, the Bidder may, at the Bidder's option, (1) withdraw the Bid or (2) submit an acceptable substitute person or entity with an adjustment in the Base Bid or Alternate Bid to cover the difference in cost occasioned by such substitution. The Owner may accept the adjusted bid price or disqualify the Bidder. In the event of either withdrawal or disqualification, bid security will not be forfeited.

6.3.4 Persons and entities proposed by the Bidder and to whom the Owner and Architect have made no reasonable objection must be used on the Work for which they were proposed and shall not be changed except with the written consent of the Owner and Architect.

ARTICLE 7 PERFORMANCE BOND AND PAYMENT BOND

7.1 BOND REQUIREMENTS

©1997 AIA®
AIA DOCUMENT A701 - 1997
INSTRUCTIONS TO BIDDERS

The American Institute of Architects
1735 New York Avenue, N.W.
Washington, D.C. 20006-5292

© 1970, 1974, 1978, 1987, © 1997 by The American Institute of Architects. Reproduction of the material herein r substantial quotation of its provisions without written permission of the AIA violates the copyright laws of the Initc ates and will subject he violator to legal prosecution. WARNING: Unlicensed photocopying violates I. ight laws and will subject the violator to legal prosecution. This document was electronically ro with permission of the AIA and can be reproduced in accordance with your license without violation ntil the date of expiration as noted below.
his document is not an original AIA® Contract Document, but a reproduction produced by AIA® ontract Documents software for administrative purposes only and is not for other use or resale.

7.1.1 If stipulated in the Bidding Documents, the Bidder shall furnish bonds covering the 'hful performance of the Contract and payment of all obligations arising thereunder. Bonds) be secured through the Bidder's usual sources.

7.1.2 If the furnishing of such bonds is stipulated in the Bidding Documents, the cost shall be included in the Bid. If the furnishing of such bonds is required after receipt of bids and before execution of the Contract, the cost of such bonds shall be added to the Bid in determining the Contract Sum.

7.1.3 If the Owner requires that bonds be secured from other than the Bidder's usual sources, changes in cost will be adjusted as provided in the Contract Documents.

7.2 TIME OF DELIVERY AND FORM OF BONDS

7.2.1 The Bidder shall deliver the required bonds to the Owner not later than three days following the date of execution of the Contract. If the Work is to be commenced prior thereto in response to a letter of intent, the Bidder shall, prior to commencement of the Work, submit evidence satisfactory to the Owner that such bonds will be furnished and delivered in accordance with this Subparagraph 7.2.1.

THIS DOCUMENT HAS IMPORTANT LEGAL CONSEQUENCES. CONSULTATION WITH AN ATTORNEY IS ENCOURAGED WITH RESPECT TO ITS COMPLETION OR MODIFICATION. AUTHENTICATION OF THIS ELECTRONICALLY DRAFTED AIA DOCUMENT MAY BE MADE BY USING AIA DOCUMENT D401.

7.2.2 Unless otherwise provided, the bonds shall be written on AIA Document A312, Performance Bond and Payment Bond. Both bonds shall be written in the amount of the Contract Sum.

7.2.3 The bonds shall be dated on or after the date of the Contract.

7.2.4 The Bidder shall require the attorney-in-fact who executes the required bonds on behalf of the surety to affix thereto a certified and current copy of the power of attorney.

E 8 FORM OF AGREEMENT BETWEEN OWNER AND CONTRACTOR

.ss otherwise required in the Bidding Documents, the Agreement for the Work will be written on AIA Document A101, Standard Form of Agreement Between Owner and Contractor Where the Basis of Payment Is a Stipulated Sum.

©1997 AIA®
AIA DOCUMENT A701 - 1997
INSTRUCTIONS TO BIDDERS

The American Institute of Architects
1735 New York Avenue, N.W.
Washington, D.C. 20006-5292

1970, 1974, 1978, 1987, © 1997 by The American Institute of Architects. Reproduction of the material herein substantial quotation of its provisions without written permission of the AIA violates the copyright laws of the ıited States and will subject he violator to legal prosecution. WARNING: Unlicensed photocopying violates S ight laws and will subject the violator to legal prosecution. This document was electronically ith permission of the AIA and can be reproduced in accordance with your license without violation til the date of expiration as noted below.
ıis document is not an original AIA® Contract Document, but a reproduction produced by AIA® ıntract Documents software for administrative purposes only and is not for other use or resale.

SECTION 002100: SUPPLEMENTARY INSTRUCTIONS TO BIDDERS

PART 1 - GENERAL

1.1 DESCRIPTION

A. The Supplementary Instructions to Bidders is bound herein.

PART 2 PRODUCTS

NOT USED

PART 3 EXECUTION

NOT USED

SECTION 002100: SUPPLEMENTARY INSTRUCTIONS TO BIDDERS

The following supplements modify "Instructions to Bidders", AIA Document A701, 1997 Edition. Where a portion of the Instructions to Bidders is modified or deleted by these Supplementary Instructions to Bidders, the unaltered portions of the Instructions to Bidders shall remain in effect.

ARTICLE 1 - DEFINITIONS

Add the following:

1.10 Whenever the word "Architect" shall appear on standard printed documents published by the American Institute of Architects (AIA), it shall mean "Engineer" and shall refer to Gipe Associates, Inc. or its appointed staff or sub-consultant.

1.11 Wherever the word "Owner" shall appear on standard printed document published by the American Institute of Architects (AIA), it shall mean the Delaware Technical Community College.

ARTICLE 2 – BIDDER'S REPRESENTATIONS

Add the following

2.1.5 The Bidders may arrange site visits to the site by contacting Scott Iseman, with Delaware Technical Community College at 302-259-6230.

ARTICLE 3 - BIDDING DOCUMENTS

3.1 - COPIES

Delete present 3.1.1. and insert new as follows:

3.1.1. "Bidders may obtain complete sets of the bidding documents as designated in the Bid Solicitation".

Add the following:

3.1.5 Direct inquires and request for information (AIA G716) to: Gipe Associates, ATTN: David R. Hoffman, P.E., Phone (410) 822-8688, Email: dhoffman@gipe.net, no later than seven (7) days prior to bid due date.

3.3 – SUBSTITUTIONS

Add new paragraph:

3.3.5 "Refer to Section 016000 Product Requirements Substitutions for additional requirement and procedures regarding substitutions."

ARTICLE 4 - BIDDING PROCEDURES

4.2 - BID SECURITY

4.2.1 Delete the last sentence, "The amount of the bid security shall not be forfeited to the Owner in the event the Owner fails to comply with Section 6.2."

Add new paragraphs:

4.2.4 "Bid security is required and shall be in the amount of ten percent (10%) of the base bid

amount, shall be a surety bond written on the provided form by the State of Delaware Office of Management and Budget - Bid Bond, by a company satisfactory to the Owner, or equivalent."(A copy of the State of Delaware Office of Management and Budget - Bid Bond is enclosed at the end of this Section.)

4.2.5 "Bids shall be accompanied by a Bid Guaranty, which shall either be a certified check made payable to Delaware Technical Community College or a bond in a form by a surety company approved by the Delaware Technical Community College".

4.3 - SUBMISSION OF BIDS

Add new paragraph:

4.3.5 "Bids must be enclosed in sealed envelopes as described above and in the Bid Solicitation".

4.4 - MODIFICATION OR WITHDRAWAL OF BID

Add new paragraph:

4.4.5 "The bid shall be held open by bidders for acceptance for ninety (90) days. This time period shall be irrevocable."

ARTICLE 6 - POST BID INFORMATION

6.1 – CONTRACTOR'S QUALIFICATION STATEMENT

Add the following:

6.1.1 Bidder shall execute A-305 Contractor Qualification Statement if requested by the Owner or Engineer.

6.2 – OWNER'S FINANCIAL CAPABILITY

Delete paragraph 6.2 in its entirety.

6.3 - SUBMITTALS

Delete present 6.3.1 and insert new as follows:

6.3.1: "The bidder shall submit a list of subcontractors with names and addresses of all subcontractors identified on the Subcontractor's Listing Form with Bid Form at time of Bid. List all subcontractors/suppliers whose percent of work is 5% or greater. Types of work not listed indicate that the Contractor intends to perform the work with his own force. Failure of Contractor to list subcontractors may result in disqualification of bid. "

ARTICLE 7 - PERFORMANCE BOND AND PAYMENT BOND

7.1 - BOND REQUIREMENTS

Add new paragraphs:

7.1.4 "The Contractor shall provide a Performance Bond in the amount of one hundred percent (100%) of the Contract Award written in the standard form of AIA Document A312. The cost of the bond shall be paid by the Contractor and included in his Bid." (AIA Document A312 Performance Bond is enclosed at the end of Division 00 Contracting Requirements.)

7.1.5 "The Contractor shall provide a Labor and Material Payment Bond in the amount of one hundred percent (100%) of the Contract Award written in the standard form of AIA Document A312. The cost of the bond shall be paid by the Contractor and included in his

Bid." (AIA Document 312 – Payment Bond is enclosed at the end of Division 00 Contracting Requirements.)

7.1.6 "Bonds shall be written by companies satisfactory to the Owner and licensed in Delaware."

7.1.7 "The bonds shall also contain the successful bidder's guarantee to indemnify and save harmless Delaware Technical Community College and their agents, servants and employees from all costs, damages, and expenses growing out of or by reason of the successful bidder's failure to comply and perform the work and complete the contract in accordance with the Agreement and Contract Documents".

Add the following:

ARTICLE 9 - ADDITIONAL INSTRUCTIONS TO BIDDERS

9.1 - TIME OF COMPLETION

9.1.1 The Owner desires substantial completion of total project to be no later than one hundred fifty (150) calendar days from Notice to Proceed and final completion thirty (30) calendar days thereafter. This provision is of the essence.

9.2 - LIQUIDATED DAMAGES

9.2.1 Liquidated damages shall be assessed to compensate the Owner by the contractor to compensate the Owner's cost associated with late completion of the project. Liquidated damages shall be deducted from the final payment utilizing a change order. Refer to the Bid Form and Supplementary General Conditions for additional information.

STATE OF DELAWARE
OFFICE OF MANAGEMENT AND BUDGET

BID BOND

TO ACCOMPANY PROPOSAL
(Not necessary if security is used)

KNOW ALL MEN BY THESE PRESENTS That: _____ _____of _____ in the County of _____ _____and State of _____as **Principal**, and _____ _____ of _____ in the County of _____ and State of _____ as **Surety**, legally authorized to do business in the State of Delaware ("**State**"), are held and firmly unto the **State** in the sum of _____ _____ Dollars ($_____), or _____ percent not to exceed _____ _____ Dollars ($_____) of amount of bid on Contract No. _____, to be paid to the **State** for the use and benefit of _____ (***insert State agency name***) for which payment well and truly to be made, we do bind ourselves, our and each of our heirs, executors, administrators, and successors, jointly and severally for and in the whole firmly by these presents.

NOW THE CONDITION OF THIS OBLIGATION IS SUCH That if the above bonded **Principal** who has submitted to the _____ (***insert State agency name***) a certain proposal to enter into this contract for the furnishing of certain material and/or services within the **State**, shall be awarded this Contract, and if said **Principal** shall well and truly enter into and execute this Contract as may be required by the terms of this Contract and approved by the _____ _____ (***insert State agency name***) this Contract to be entered into within twenty days after the date of official notice of the award thereof in accordance with the terms of said proposal, then this obligation shall be void or else to be and remain in full force and virtue.

Sealed with _____ seal and dated this _____day of _____ in the year of our Lord two thousand and _____ (20___).

SEALED, AND DELIVERED IN THE
Presence of

_____
Name of Bidder (Organization)

Corporate Seal

By: _____
Authorized Signature

Attest _____

_____
Title

_____
Name of Surety

Witness:_____ By: _____

_____
Title

SECTION 003000: INFORMATION AVAILABLE TO BIDDERS

PART 1 GENERAL

1.1 DESCRIPTION

A. The following Existing Test and Balance Survey information is for Contractor's use in preparing the bid, but are not Contract Documents.

PART 2 PRODUCTS

NOT USED

PART 3 EXECUTION

NOT USED

END OF SECTION

Chesapeake Testing & Balancing

400 Needwood Avenue
Easton, MD 21601
410-820-9791 410-820-7389 Fax
E-mail: c.weisman@chesapeaketab.com

TEST & BALANCE REPORT

Project: AIR HANDLING UNIT-1
DTCC CARTER PARTNERSHIP CENTER

Location: GEORGETOWN, DE

Client: DELAWARE TECHINICAL & COMMUNITY COLLEGE

Architect: ANDERSON, BROWN, HIGLEY & FUNK

Engineer: DELAWARE ENGINEERING & DESIGN CORP.

Chesapeake Testing & Balancing Engineers, Inc. Project #: 14-285

Certification

This is to certify that Chesapeake Testing & Balancing Engineers, Inc. has balanced the systems described herein to their optimum performance capabilities. The testing and balancing has been performed in accordance with the standard requirements and procedures of the Associated Air Balance Council, and the results of these tests are herein recorded.

Associated Air Balance Council
Certification 88-07-19

Chesapeake Testing and Balancing Engineers, Inc. ASSOCIATED AIR BALANCE COUNCIL AABC TBE • 88-07-19 • Christian J. Weisman

Christian J. Weisman, President

Date: November 5, 2014

DTCC CARTER PARTNERSHIP BLDG.

Table of Contents

System	Page Number
JOB NOTES	1
AH-1 RF-1	2
AH-1 / RF-1 DIAGRAM	3
AH-1 TS TOTAL	4
RAF-1 TR TOTAL	5
AH-1 VAV Box Summary	6
AH-1 VAV-1-1	7
AH-1 VAV-1-2	8
AH-1 VAV-1-3	9
AH-1 VAV-1-4	10
AH-1 VAV-1-5	11
AH-1 VAV-1-6	12
AH-1 VAV-1-7	13
AH-1 VAV-1-8	14
AH-1 VAV-1-9R	15
AH-1 VAV-1-10R	16
AH-1 VAV-1-12R	17
AH-1 VAV-1-13R	18
AH-1 VAV-1-14	19
AH-1 VAV-1-15	20
AH-1 VAV-1-16	21
AH-1 VAV-1-17	22
AH-1 VAV-1-18	23
RAF-1 D&G	24
CHILLED WATER PUMP-3	25
CHILLED WATER AH-1 COOLING COIL TEST	26
CHILLED WATER FLOW AH-1	27
HEATING WATER PUMPS 1 & 2	28
HEATING WATER PARTIAL SYSTEM	29
BOILER & CHILLER WATER PLANT PRINT OUT	30

Chesapeake Testing and Balancing, Inc.

Project Summary

Job Number: 14-285 Date: 2014

10-13-14 - SERVING FLOWS OF VAV BOXES SERVED BY AH-1, FOUND MAX/MIN CFM SETPOINTS & VARIOUS BOX SIZES PROGRAMMED WRONG AT COMPUTER. RESET PROPER CFM FLOW & BOX AND (2) VAV'S.

10-14-14 - INSTALLED ALL PROPER CFM & AREA SETTINGS AT FRONT END. HOWEVER SETTING DID NOT TRANSFER TO TEC. SETTINGS WERE THEN SET DIRECTLY INTO TEC THROUGH TSTATS.

10-15-14 - SETTING SET DIRECTLY INTO TEC'S ALSO DID NOT HOLD. LOADED SETTINGS AT TEC ONE AT A TIME TO BALANCE VAV'S. BALANCED (6) VAV'S ALSO DETERMINE TO ACTUALLY CALIBRATE VAV'S. SEIMEN DIRECTED TO ADDRESS PROGRAMMING ISSUES.

10-17-14 - CALIBRATED (6) VAV'S, SETTINGS STILL NOT HOLDING. RESET AT EACH VAV AS CALIBRATING NO RESOLVE FROM SEIMENS AT THIS TIME. PREP AH-1

10-20-14 - ALL HOT WATER VALVES AHS VAV'S & FINTUBE OPENED, SET P-2 HEATING WATER PUMP TO DESIGN TDH. NEW SCOPE OF WORK TO SET FLOWS THROUGH VAV'S AND ASSOCIATED FINTUBE IN AREA. SET FLOWS (13) VAV BOXES REHEAT COIL.
SET FLOWS (4) FINTUBE.

10-21-14 - COMPLETED HEATING WATER FLOW (4) VAV'S REHEAT COILS. COMPLETED (3) FINTUBE SETTING FLOWS. FINTUBE SERVING RM #580 & 570 , BAS DOES NOT CONTROL. CALIBRATED (2) VAV BOXES AIR SIDE.

10-22-14 - CALIBRATE (2) VAV BOXES AIR SIDE. (1) 1-15 VAV FOUND BROKE GEARS AT ACTUATOR, D.T.C.C. TO ORDER PARTS & REPAIR. COMPLETED REMOVING FINTUBE FLOWS WATER. FINALIZED HEATING WATER PUMP P-1 & P-2. CFM SET PT. CHECK AT (7) SEPERATE VAVS (4) OK (3) FOUND WRONG. SIEMENS WAS ADDRESSING AT THIS TIME. PER SEIMENS REPAIRED.

10-27-14 - CFM SET PT FOUND WRONG AGAIN & ALL PARTIES CONTACTED. SEIMENS AGAIN ADDRESSING PROBLEMS. PER SEIMEN PROBLEM CORRECTED AT DAYS END. P-3 CHILLED WATER FLOW SET AH-1 FLOW SET P3 FINALIZED.

10-28-14 - SET UP FOR FINALIZATION AH-1. ALL VAV'S SET TO MAX FLOW. NOT WORKING PER SEIMENS SET TEMP ST PTS TO 60F, THIS DID NOT OPEN VAV'S TO MAX FLOW. THIS WAS CORRECTED THROUGH CURT & SEIMENS. RECORDED ALL COMPUTER FLOWS, HOOD READING VAV 1-15. VAV-1-9R & 1-10 R DAMPERS HUNTING FOR MAX ST PTS. DAMPER COMMAND 0-100. NOT FINDING COMMAND & POSITION. SUPPLY AIR TOTAL FLOW READING OBTAINED. FINALIZED SUPPLY AIR FAN.

10-29-14 - SET RETURN AIR FAN TOTAL FLOW. FINALIZED RETURN AIR FAN. READ OUT RETURN AIR ABOVE CEILING OUTLETS. FINALIZED AH-1 - STATICS. STATIC ST PT OBTAINED PRINTOUTS VAV BOXES & AH-1 GRAPHIC.

Chesapeake Testing and Balancing, Inc.

Air Moving Equipment Test Data

Job Number: 14-285
System: AH-1 & RF-1

Date: 10/28/2014

UNIT INFORMATION				
Unit Number	AH-1		RF-1	
Location	584 B MECH RM		584B MECH RM	
Area Served	AREA "D"		AREA "D"	
Manufacturer	TRANE		TRANE	
Model Number	CCDB63FBN		QFNA44	
Serial Number	K90M36227		L90M04825	

AIR MEASUREMENTS	DESIGN	ACTUAL		DESIGN	ACTUAL
Total Fan CFM	29,570	22,896		25,100	19,620
Total Outlet CFM	26,692	23,023		23,392	19,339
Total Traverse CFM	26,692	22,896		23,392	19,620
Total Return Air CFM	23,392	19,620		23,392	19,620
Total Outside Air CFM	3,300	3,276		-	-
External Unit Static Pressure	3.0	3.11		-	-
Total Fan Static Pressure	4.0	3.45		1.0	1.75
Total Suction Static Pressure	-	-.39		-	-1.8
Total Discharge Static Pressure	-	+3.06		-	-.05
Fan RPM	-	917		855	778
Diff. Press. Set Point	-	-		-	-

MOTOR MEASUREMENTS	DESIGN	ACTUAL		DESIGN	ACTUAL
Motor HP	30	16.9		10	6.0
Motor Voltage - Leg1 / Leg2 / Leg3	460	477/477/480		460	477/474/476
Motor Phase	3	3		3	3
Motor Amps - Leg1 / Leg2 / Leg3	36.2	20.0/19.6/19.2		13.3	7.4/7.9/7.7
Motor Service Factor	1.15	1.15		1.15	1.15
Motor RPM	1,760	1,773		1,760	1,676
VFD Hz. Setting	YES	60 HZ		YES	57 HZ
Overload Protection	VFD	37 AMPS		VFD	13.5 AMPS

SHEAVE & BELT DATA			
Motor Sheave & Shaft	2T096 BUSHING Q1 1 7/8		1VP68 X 1 3/8
Fan Sheave & Shaft	2018OR BUSHING R1 2 7/16		2TB154 BUSHING Q1 1 11/16
Belt - Quantity/Size	(2)BX120		(2) BX103
Center Distance	40"		38"
% Sheave Adjusted Closed	FIXED		20%

Chesapeake Testing and Balancing, Inc.

Diagram

Job Number: 14-285
System: AH-1 & RF-1

Date: 10/29/2014

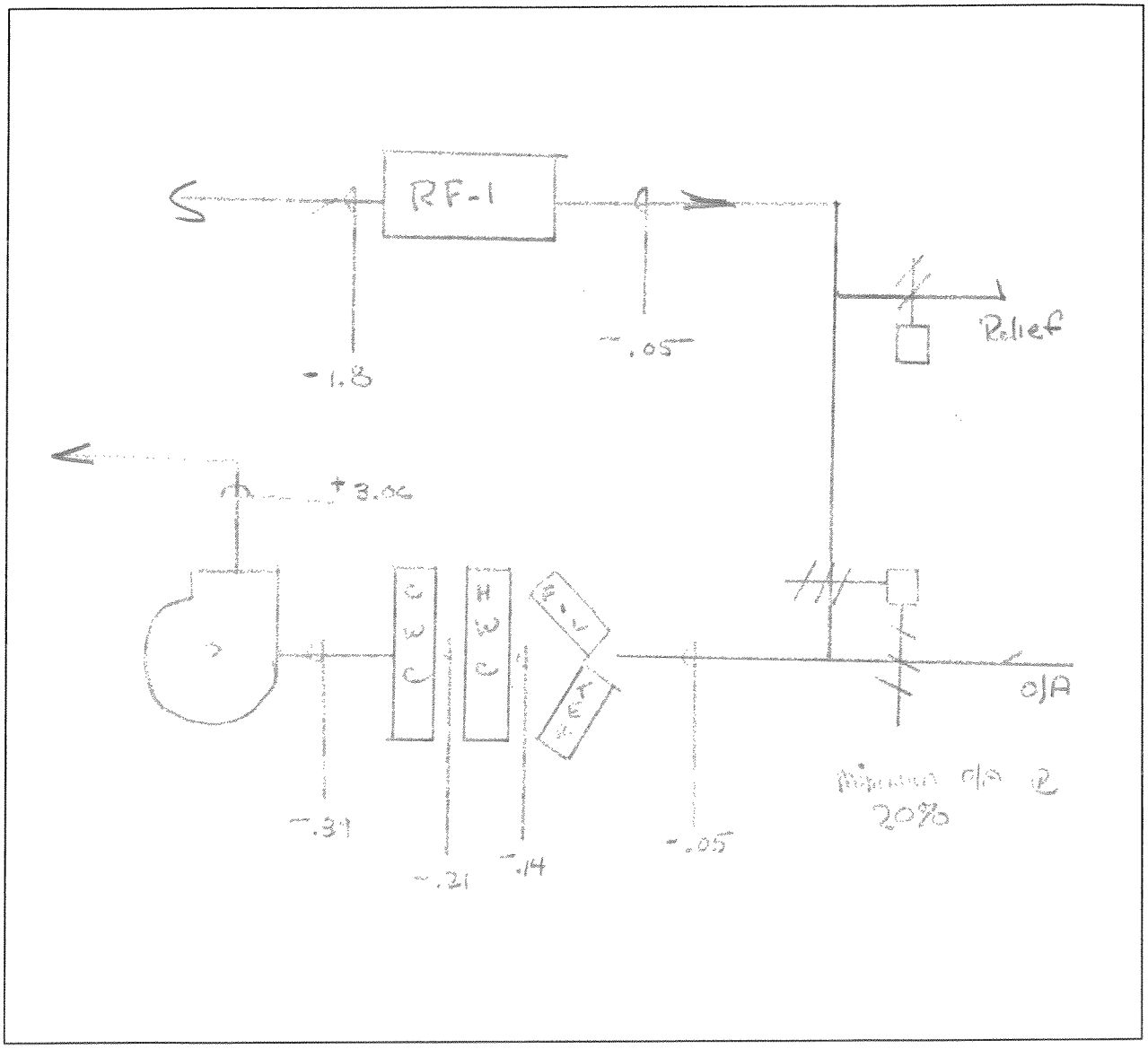

STATIC PRESSURE SKETCH
STATIC PRESSURE READING +2.54"
STATIC PRESSURE SETPOINT +2.7"
MINIMUM OUTSIDE AIR SETPOINT 20%
REFER TO COMPUTER PRINT OUT ON THE NEXT PAGE

DELAWARE TECHNICAL COMMUNITY COLLEGE

CARTER PARTNERSHIP CENTER
AIR HANDLER 1

OAT 74.43 DEG F | OAH 20.54 PERCNT

MODE 0.0 = UNOCCUPIED
MODE 1.0 = OCCUIED
MODE 9.0 = UNOCC (NIGHT SETBACK COOLING)
MODE 8.0 = UNOCC (NIGHT SETBACK HEATING)
MODE 6.0 = OCCUPIED WARMUP
MODE 7.0 = OCCUPIED COOLDOWN

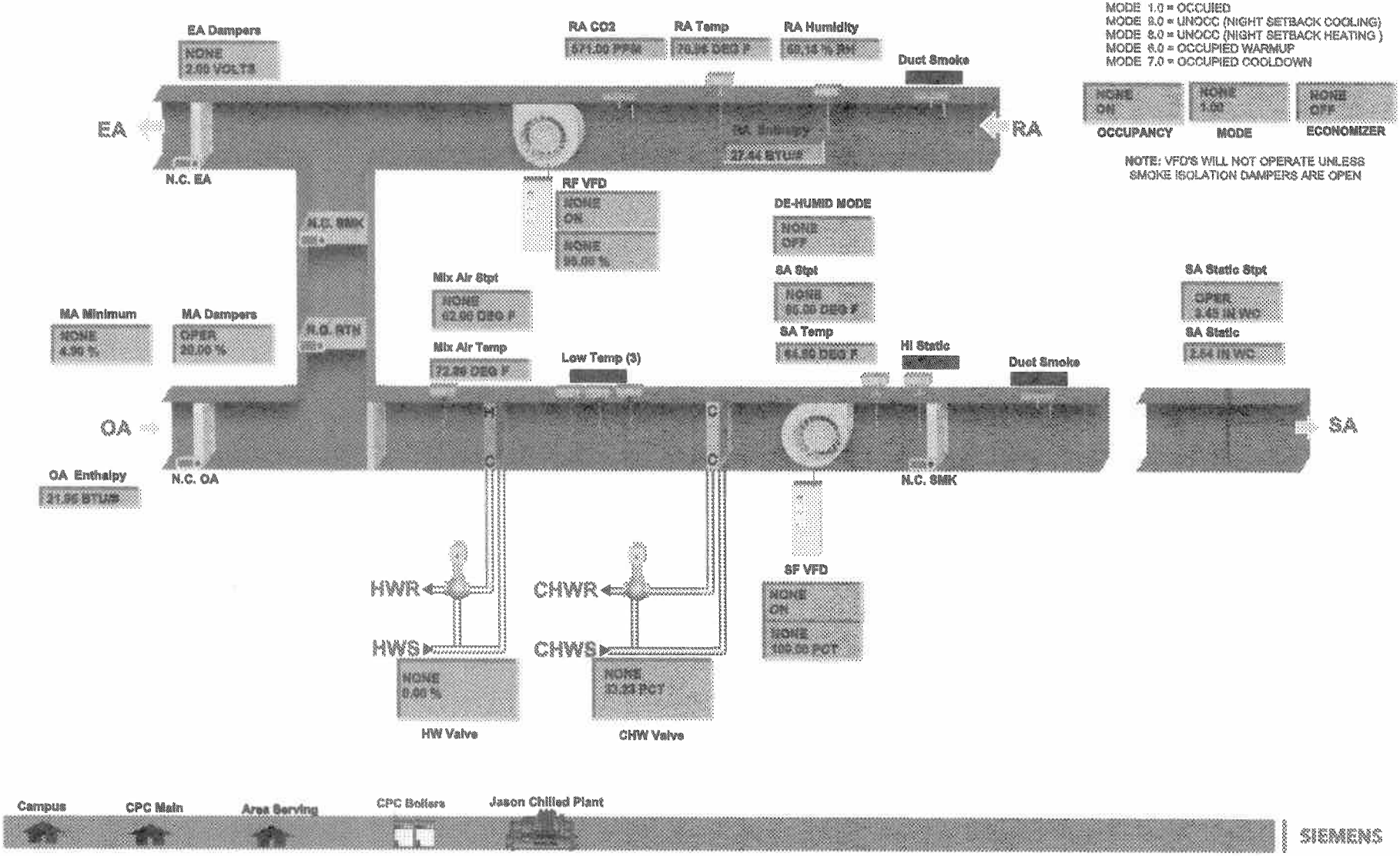

SIEMENS

Chesapeake Testing and Balancing, Inc.

Circular Duct Traverse Test Data

Job Number: 14-285
System: AH-1 SUPPLY

Date: 10/28/2014

Traverse Number	TS TOTAL
Traverse Location	584B MECH RM
Outlets Served	VAV'S 1-1 TO 1-18

Duct Size

Diameter	42"0
Area	9.6

Design		Actual	
FPM	CFM	FPM	CFM
2781	26698	2385	22896

Static Pressure 2.66

Individual Velocity Readings

					2045					
					2398					
					2617					
					2655					
					2574					
1933	2318	2565	2644	2477		2364	2278	2442	2391	2114
					2432					
					2422					
					2422					
					2355					
					2255					

Chesapeake Testing and Balancing, Inc.

Rectangular Duct Traverse Test Data

Job Number: 14-285
System: RAF-1

Date: 10/28/2014

Traverse Number	TR TOTAL
Traverse Location	LOBBY
Outlets Served	1-9

Duct Size

Width	48
Height	30
Area	10.00

Design		Actual	
FPM	CFM	FPM	CFM
2339	23392	1962	19620

Static Pressure -1.17

Individual Velocity Readings

1253	1621	1631	1907	1925	1823	1823	1813		
1892	1899	2044	2264	2297	2091	2066	1759		
1847	1913	2127	2120	2270	2251	2161	1662		
1745	2052	2093	2285	2236	2276	2038	1885		
1884	2006	1963	2013	2082	1899	1821	1723		

Chesapeake Testing and Balancing, Inc.

VAV Box Summary Test Data

Job Number: 14-285
System: AH-1

Date: 10/28/2014

Some of the boxes may have been commanded to their minimum set point in order to simulate the required diversity

VAV Number	DDC Address	Box Commanded To:		Design CFM	Actual CFM
		Min	Max		
VAV-1-1	1	-	X	3000	2994
VAV-1-2	2	-	X	532	508
VAV-1-3	3	-	X	1820	1400 *
VAV-1-4	4	-	X	920	923
VAV-1-5	5	-	X	920	923
VAV-1-6	6	-	X	920	750 *
VAV-1-7	7	-	X	710	704
VAV-1-8	8	-	X	900	517 ****
VAV-1-9R	9	-	X	960	926 ***
VAV-1-10R	10	-	X	1900	1933 ***
VAV-1-12R	12	-	X	760	733
VAV-1-13R	13	-	X	1700	1680 *
VAV-1-14	14	-	X	3450	3132 *
VAV-1-15	15	-	X	1800	1340 **
VAV-1-16	16	-	X	2400	1812
VAV-1-17	17	-	X	1700	1057
VAV-1-18	18	-	X	2300	1700 *
				26692	23023

*BOX DAMPER 100% OPEN

**BOX DAMPER BROKE. DAMPER REMOVED. FLOW BY TOTAL HOOD READINGS.

***BOX DAMPER HUNTING 0%-100% OVERODE DAMPER COMMAND POINT TO STABILIZE.

****NOT SHOWN ON BAS BLUE SCREEN

HV101 AIR VOLUME VIR
HV101 CFM CALC
NORMAL
NONE
1010.94 CFM

HV102 AIR VOLUME VIR
HV102 CFM CALC
NORMAL
NONE
933.90 CFM

HV103 AIR VOLUME VIR
HV103 CFM CALC
NORMAL
NONE
1408.00 CFM

HV104 AIR VOLUME VIR
HV104 CFM CALC
NORMAL
NONE
923.07 CFM

HV105 AIR VOLUME VIR
HV105 CFM CALC
NORMAL
NONE
922.92 CFM

HV106 AIR VOLUME VIR
HV106 CFM CALC
NORMAL
NONE
788.50 CFM

HV107 AIR VOLUME VIR
HV107 CFM CALC
NORMAL
NONE
704.00 CFM

HV108 AIR VOLUME VIR
HV108 CFM CALC
NORMAL
NONE
936.13 CFM

HV110 AIR VOLUME VIR
HV110 CFM CALC
NORMAL
NONE
1941.11 CFM

HV112 AIR VOLUME VIR
HV112 CFM CALC
NORMAL
NONE
90.11 CFM

HV113 AIR VOLUME VIR
HV113 CFM CALC
NORMAL
NONE
1124.90 CFM

HV114 AIR VOLUME VIR
HV114 CFM CALC
NORMAL
NONE
3124.90 CFM

HV115 AIR VOLUME VIR
HV115 CFM CALC
NORMAL
NONE
108.89 CFM

HV116 AIR VOLUME VIR
HV116 CFM CALC
NORMAL
NONE
1819.21 CFM

HV117 AIR VOLUME VIR
HV117 CFM CALC
NORMAL
NONE
1297.[illegible] CFM

HV118 AIR VOLUME VIR
HV118 CFM CALC
NORMAL
NONE
1605.15 CFM

HV119 AIR VOLUME VIR
HV119 CFM CALC
NORMAL
NONE
[illegible] CFM

Chesapeake Testing and Balancing, Inc.

VAV Box Test Data

Job Number: 14-285
System: AH-1

Date: 10/14/2014

UNIT INFORMATION	
Unit Number	VAV-1-1
Location	SNACK SHOP
Area Served	SNACK SHOP
Manufacturer	TRANE
Model Number	VCWD-32
Primary Air Inlet Size	14"0 = 1.068

AIR MEASUREMENTS	DESIGN	ACTUAL
Minimum CFM	2000	2015
Maximum CFM	3000	2985
Minimum Velocity Pressure	-	-
Maximum Velocity Pressure	.36	-
DDC Calibration Factor	-	.71
DDC Address	-	1

Room	Number	Size	Type	Ak	Design		Actual	
					Min CFM	Max CFM	Min CFM	Max CFM
SNACK SHOP	1	48"-2SLOTS-8"0	LSD	-	-	300	200	295
SNACK SHOP	2	48"-2SLOTS-8"0	LSD	-	-	300	205	305
SNACK SHOP	3	48"-2SLOTS-8"0	LSD	-	-	300	195	285
SNACK SHOP	4	48"-2SLOTS-8"0	LSD	-	-	300	210	305
SNACK SHOP	5	48"-2SLOTS-8"0	LSD	-	-	300	205	305
SNACK SHOP	6	48"-2SLOTS-8"0	LSD	-	-	300	205	310
SNACK SHOP	7	48"-2SLOTS-8"0	LSD	-	-	300	190	280
SNACK SHOP	8	48"-2SLOTS-8"0	LSD	-	-	300	205	305
SNACK SHOP	9	48"-2SLOTS-8"0	LSD	-	-	300	210	310
SNACK SHOP	10	48"-2SLOTS-8"0	LSD	-	-	300	190	285
					2000	3000	2015	2985

Chesapeake Testing and Balancing, Inc.

VAV Box Test Data

Job Number: 14-285
System: AH-1

Date: 10/14/2014

UNIT INFORMATION	
Unit Number	VAV-1-2
Location	584A
Area Served	584A MECH RM
Manufacturer	TRANE
Model Number	VCWD-06
Primary Air Inlet Size	6"0 = .196

AIR MEASUREMENTS	DESIGN	ACTUAL
Minimum CFM	230	220
Maximum CFM	532	545
Minimum Velocity Pressure	-	-
Maximum Velocity Pressure	.49	-
DDC Calibration Factor	-	.12
DDC Address	-	2

Room	Number	Size	Type	Ak	Design		Actual	
					Min CFM	Max CFM	Min CFM	Max CFM
584A PREP RM	1	48"-2SLOTS-8"0	LSD	-	-	133	60	135
584A PREP RM	2	48"-2SLOTS-8"0	LSD	-	-	133	60	145
MECH RM CORR	3	48"-2SLOTS-8"0	LSD	-	-	133	50	130
MECH RM CORR	4	48"-2SLOTS-8"0	LSD	-	-	133	50	135
					230	532	220	545

Chesapeake Testing and Balancing, Inc.

VAV Box Test Data

Job Number: 14-285
System: AH-1

Date: 10/14/2014

UNIT INFORMATION	
Unit Number	VAV-1-3
Location	LOBBY
Area Served	LOBBY CORR
Manufacturer	TRANE
Model Number	VCWD-17
Primary Air Inlet Size	10"0 = .545

AIR MEASUREMENTS	DESIGN	ACTUAL
Minimum CFM	730	660
Maximum CFM	1820	1545 *
Minimum Velocity Pressure	-	-
Maximum Velocity Pressure	.43	-
DDC Calibration Factor	-	.60
DDC Address	-	3

Room	Number	Size	Type	Ak	Design		Actual	
					Min CFM	Max CFM	Min CFM	Max CFM
LOBBY	1	48"-2SLOTS-8"0	LSD R	-	-	300	115	255
LOBBY	2	48"-2SLOTS-8"0	LSD R	-	-	300	105	265
LOBBY	3	48"-2SLOTS-8"0	LSD R	-	-	300	95	225
CORR	4	48"-2SLOTS-8"0	LSD B	-	-	230	75	185
CORR	5	48"-2SLOTS-8"0	LSD B	-	-	230	85	205
CORR	6	48"-2SLOTS-8"0	LSD B	-	-	230	85	195
CORR	7	48"-2SLOTS-8"0	LSD B	-	-	230	100	215
					730	1820	660	1545

*BOX DAMPER 100% CALIBRATED TO THE AIRFLOW AVAILABLE.

Chesapeake Testing and Balancing, Inc.

VAV Box Test Data

Job Number: 14-285
System: AH-1

Date: 10/15/2014

UNIT INFORMATION	
Unit Number	VAV-1-4
Location	CORR
Area Served	CORR
Manufacturer	TRANE
Model Number	VCWD
Primary Air Inlet Size	8"0 = .349

AIR MEASUREMENTS	DESIGN	ACTUAL
Minimum CFM	370	365
Maximum CFM	920	930
Minimum Velocity Pressure	-	-
Maximum Velocity Pressure	.32	-
DDC Calibration Factor	-	.22
DDC Address	-	4

Room	Number	Size	Type	Ak	Design		Actual	
					Min CFM	Max CFM	Min CFM	Max CFM
CORR	1	48"-2SLOTS-8"0	LSD B	-	-	230	85	225
CORR	2	48"-2SLOTS-8"0	LSD B	-	-	230	90	220
CORR	3	48"-2SLOTS-8"0	LSD B	-	-	230	95	235
CORR	4	48"-2SLOTS-8"0	LSD B	-	-	230	95	250
					370	920	365	930

Chesapeake Testing and Balancing, Inc.

VAV Box Test Data

Job Number: 14-285
System: AH-1

Date: 10/15/2014

UNIT INFORMATION	
Unit Number	VAV-1-5
Location	CORR
Area Served	CORR
Manufacturer	TRANE
Model Number	VCWD-11
Primary Air Inlet Size	8"0 = .349

AIR MEASUREMENTS	DESIGN	ACTUAL
Minimum CFM	370	405
Maximum CFM	920	915
Minimum Velocity Pressure	-	-
Maximum Velocity Pressure	.32	-
DDC Calibration Factor	-	.25
DDC Address	-	5

Room	Number	Size	Type	Ak	Design		Actual	
					Min CFM	Max CFM	Min CFM	Max CFM
CORR	1	48"-2SLOTS-8"0	LSD B	-	-	230	110	250
CORR	2	48"-2SLOTS-8"0	LSD B	-	-	230	95	225
CORR	3	48"-2SLOTS-8"0	LSD B	-	-	230	105	230
CORR	4	48"-2SLOTS-8"0	LSD B	-	-	230	95	210
					370	920	405	915

Chesapeake Testing and Balancing, Inc.

VAV Box Test Data

Job Number: 14-285
System: AH-1

Date: 10/16/2014

UNIT INFORMATION	
Unit Number	VAV-1-6
Location	CORR
Area Served	CORR
Manufacturer	TRANE
Model Number	VCWD-11
Primary Air Inlet Size	8"0 = .345

AIR MEASUREMENTS	DESIGN	ACTUAL
Minimum CFM	370	390
Maximum CFM	920	805 *
Minimum Velocity Pressure	-	-
Maximum Velocity Pressure	.32	-
DDC Calibration Factor	-	.21
DDC Address	-	6

Room	Number	Size	Type	Ak	Design		Actual	
					Min CFM	Max CFM	Min CFM	Max CFM
CORR	1	48"-2SLOTS-8"0	LSD B	-	-	230	110	210
CORR	2	48"-2SLOTS-8"0	LSD B	-	-	230	100	205
CORR	3	48"-2SLOTS-8"0	LSD B	-	-	230	95	195
CORR	4	48"-2SLOTS-8"0	LSD B	-	-	230	95	195
					370	920	390	805

*BOX 100% OPEN.

Chesapeake Testing and Balancing, Inc.

VAV Box Test Data

Job Number: 14-285
System: AH-1

Date: 10/16/2014

UNIT INFORMATION	
Unit Number	VAV-1-7
Location	582A
Area Served	CORR 582B 582C
Manufacturer	TRANE
Model Number	VCWD-11
Primary Air Inlet Size	8"0 = .345

AIR MEASUREMENTS	DESIGN	ACTUAL
Minimum CFM	284	250
Maximum CFM	710	695
Minimum Velocity Pressure	-	-
Maximum Velocity Pressure	.23	-
DDC Calibration Factor	-	.19
DDC Address	-	7

Room	Number	Size	Type	Ak	Design		Actual	
					Min CFM	Max CFM	Min CFM	Max CFM
CORR	1	48"-2SLOTS-8"0	LSD D	-	-	200	65	205
WOMENS 582B	2	48"-2SLOTS-8"0	LSD C	-	-	155	50	130
MENS 582C	3	48"-2SLOTS-8"0	LSD C	-	-	155	50	130
CORR	4	48"-2SLOTS-8"0	LSD D	-	-	200	85	230
					284	710	250	695

Chesapeake Testing and Balancing, Inc.

VAV Box Test Data

Job Number: 14-285
System: AH-1

Date: 10/16/2014

UNIT INFORMATION	
Unit Number	VAV-1-8
Location	LOBBY
Area Served	LOBBY
Manufacturer	TRANE
Model Number	VCWD-11
Primary Air Inlet Size	8"0 = .345

AIR MEASUREMENTS	DESIGN	ACTUAL
Minimum CFM	284	290
Maximum CFM	900	560 *
Minimum Velocity Pressure	-	-
Maximum Velocity Pressure	.34	-
DDC Calibration Factor	-	.23
DDC Address	-	8

Room	Number	Size	Type	Ak	Design		Actual	
					Min CFM	Max CFM	Min CFM	Max CFM
LOBBY	1	48"-2SLOTS-8"0	LSD R	-	-	300	115	210
LOBBY	2	48"-2SLOTS-8"0	LSD R	-	-	300	75	160
LOBBY	3	48"-2SLOTS-8"0	LSD R	-	-	300	100	190
					284	900	290	560

*DISCHARGE DUCTWORK - 3 ELBOWS TO GET TO OUTLETS

Chesapeake Testing and Balancing, Inc.

VAV Box Test Data

Job Number: 14-285
System: AH-1

Date: 10/16/2014

UNIT INFORMATION	
Unit Number	VAV-1-9R
Location	581
Area Served	581
Manufacturer	TRANE
Model Number	VCWD-24
Primary Air Inlet Size	10"0-.54

AIR MEASUREMENTS	DESIGN	ACTUAL
Minimum CFM	960	-
Maximum CFM	960	960 *
Minimum Velocity Pressure	-	-
Maximum Velocity Pressure	-	-
DDC Calibration Factor	-	.41
DDC Address	-	-

Room	Number	Size	Type	Ak	Design		Actual	
					Min CFM	Max CFM	Min CFM	Max CFM
581 PREP RM	1	48"-2SLOTS-8"0	LSD S	-	-	120	-	175
581 PREP RM	2	48"-2SLOTS-8"0	LSD N	-	-	140	-	225
581 PREP RM	3	48"-2SLOTS-8"0	LSD K	-	-	250	-	200
581 PREP RM	4	48"-2SLOTS-8"0	LSD K	-	-	250	-	185
CORR	5	48"-2SLOTS-8"0	LSD D	-	-	200	-	175
					960	960	-	960

*BOX DAMPER STAYS 100% OPEN. NOT CUTTING BACK FOR DESIGN FLOW OVER RODE DAMPER COMMAND TO CALIBRATE VAV (34.8%). THIS NEEDS TO BE REPAIRED.

Chesapeake Testing and Balancing, Inc.

VAV Box Test Data

Job Number: 14-285
System: AH-1

Date: 10/16/2014

UNIT INFORMATION	
Unit Number	VAV-1-10R
Location	581
Area Served	581
Manufacturer	TRANE
Model Number	VCWD-24
Primary Air Inlet Size	12"0 = .785

AIR MEASUREMENTS	DESIGN	ACTUAL
Minimum CFM	1900	1945
Maximum CFM	1900	1945 *
Minimum Velocity Pressure	-	-
Maximum Velocity Pressure	-	-
DDC Calibration Factor	-	.54
DDC Address	-	-

Room	Number	Size	Type	Ak	Design		Actual	
					Min CFM	Max CFM	Min CFM	Max CFM
581	1	48"-2SLOTS-8"0	LSD A	-	-	170	-	145
581	2	48"-2SLOTS-8"0	LSD A	-	-	170	-	175
581	3	48"-2SLOTS-8"0	LSD A	-	-	170	-	170
581	4	48"-2SLOTS-8"0	LSD A	-	-	170	-	150
581	5	48"-2SLOTS-8"0	LSD A	-	-	170	-	190
581	6	48"-2SLOTS-8"0	LSD A	-	-	170	-	170
581	7	48"2SLOTS-8"0	LSD A	-	-	170	-	160
581	8	48"2SLOTS-8"0	LSD A	-	-	170	-	185
581	9	48"2SLOTS-8"0	LSD A	-	-	170	-	205
581	10	48"2SLOTS-8"0	LSD A	-	-	170	-	185
CORR	11	48"2SLOTS-8"0	LSD D	-	-	200	-	210
					1900	1900	-	1945

*BOX DAMPER STAYS 100% OPEN. BOX DAMPER MANUAL OVERRIDDEN TO 48% TO CALIBRATE BOX. THIS NEEDS TO BE REPAIRED.

Chesapeake Testing and Balancing, Inc.

VAV Box Test Data

Job Number: 14-285
System: AH-1

Date: 10/16/2014

UNIT INFORMATION	
Unit Number	VAV-1-12R
Location	580
Area Served	580
Manufacturer	TRANE
Model Number	VCWD-11
Primary Air Inlet Size	8"0 - .349

AIR MEASUREMENTS	DESIGN	ACTUAL
Minimum CFM	760	780
Maximum CFM	760	780 *
Minimum Velocity Pressure	-	-
Maximum Velocity Pressure	-	.18
DDC Calibration Factor	-	-
DDC Address	-	12

Room	Number	Size	Type	Ak	Design		Actual	
					Min CFM	Max CFM	Min CFM	Max CFM
580 STORAGE	1	48"-2SLOTS-8"0	LSD K	-	-	250	-	265
580 STORAGE	2	48"-2SLOTS-8"0	LSD K	-	-	250	-	265
580 STORAGE	3	48"-2SLOTS-8"0	LSD H	-	-	130	-	120
580 STORAGE	4	48"-2SLOTS-8"0	LSD H	-	-	130	-	130
					-	760	780	780

*BOX DAMPER 100% OPEN.

BOX DAMPER COMMAND HUNTING. 100 CFM EITHER SIDE OF DESIGN. BOX COMMAND HUNTING. LOCKED DAMPER TO CALIBRATE VAV

Chesapeake Testing and Balancing, Inc.

VAV Box Test Data

Job Number: 14-285
System: AH-1

Date: 10/16/2014

UNIT INFORMATION	
Unit Number	VAV-1-13R
Location	580
Area Served	580
Manufacturer	TRANE
Model Number	VCWD-24
Primary Air Inlet Size	.12"0 = .785

AIR MEASUREMENTS	DESIGN	ACTUAL
Minimum CFM	1700	1285
Maximum CFM	1700	1285
Minimum Velocity Pressure	-	-
Maximum Velocity Pressure	-	.60
DDC Calibration Factor	-	-
DDC Address	-	13

Room	Number	Size	Type	Ak	Design		Actual	
					Min CFM	Max CFM	Min CFM	Max CFM
580	1	48"-2SLOTS-8"0	LSD A	-	-	170	-	135
580	2	48"-2SLOTS-8"0	LSD A	-	-	170	-	130
580	3	48"-2SLOTS-8"0	LSD A	-	-	170	-	135
580	4	48"-2SLOTS-8"0	LSD A	-	-	170	-	125
580	5	48"-2SLOTS-8"0	LSD A	-	-	170	-	125
580	6	48"-2SLOTS-8"0	LSD A	-	-	170	-	120
580	7	48"-2SLOTS-8"0	LSD A	-	-	170	-	120
580	8	48"-2SLOTS-8"0	LSD A	-	-	170	-	140
580	9	48"-2SLOTS-8"0	LSD A	-	-	170	-	130
580	10	48"-2SLOTS-8"0	LSD A	-	-	170	-	125
					1700	1700	-	1285

BOX WAS HUNTING SLIGHTLY
100 CFM ON EITHER SIDE OF DESIGN. BOX DAMPER COMMAND HUNTING LOCKED DAMPER TO CALIBRATE FLOW. PER CONTROL CONTRACTOR BOX HAS VAV APPLICATION INSTALLED. IF PROBLEM CVC APPLICATION COULD BE INSTALLED.

Chesapeake Testing and Balancing, Inc.

VAV Box Test Data

Job Number: 14-285
System: AH-1

Date: 10/13/2014

UNIT INFORMATION	
Unit Number	VAV-1-14
Location	570
Area Served	570
Manufacturer	TRANE
Model Number	VCWD - 32
Primary Air Inlet Size	14"0 = 1.068

AIR MEASUREMENTS	DESIGN	ACTUAL
Minimum CFM	1380	1395
Maximum CFM	3450 **	2320 *
Minimum Velocity Pressure	-	-
Maximum Velocity Pressure	.36	-
DDC Calibration Factor	-	.65
DDC Address	-	14

Room	Number	Size	Type	Ak	Design		Actual	
					Min CFM	Max CFM	Min CFM	Max CFM
570	1	24X24-8"0	SAD	-	-	230	85	145
570	2	24X24-8"0	SAD	-	-	230	115	175
570	3	24X24-8"0	SAD	-	-	230	115	175
570	4	24X24-8"0	SAD	-	-	230	120	210
570	5	24X24-8"0	SAD	-	-	230	115	185
570	6	24X24-8"0	SAD	-	-	230	100	165
570	7	24X24-8"0	SAD	-	-	230	80	145
570	8	24X24-8"0	SAD	-	-	230	75	125
570	9	24X24-8"0	SAD	-	-	230	95	155
570	10	24X24-8"0	SAD	-	-	230	95	140
570	11	48"-2SLOTS-8"0	LSD B	-	-	230	85	145
570	12	48"-2SLOTS-8"0	LSD B	-	-	230	80	145
570	13	48"-2SLOTS-8"0	LSD B	-	-	230	80	135
570	14	48"-2SLOTS-8"0	LSD B	-	-	230	75	125
570	15	48"-2SLOTS-8"0	LSD B	-	-	230	85	150
					1380	3450	1395	2320

*BOX DAMPER 100% OPEN.
SUPPLY AIR FAN AT 41 HZ. W VAV -1-15 BOX DAMPER REMOVED DID NOT INCREASE FAN SPD TO BALANCE. LARGE CLASS IN RM 562
**ROOM SIZE 39'X28' - 9' CEILINGS (8) PEOPLE (8) OPEN CUBICALS. SHOULD CFM SET POINTS BE LOWERED?

Chesapeake Testing and Balancing, Inc.

VAV Box Test Data

Job Number: 14-285
System: AH-1

Date: 10/22/2014

UNIT INFORMATION	
Unit Number	VAV-1-15
Location	562
Area Served	562
Manufacturer	TRANE
Model Number	VCWD - 17
Primary Air Inlet Size	10"0 = 545

AIR MEASUREMENTS	DESIGN	ACTUAL
Minimum CFM	720	-
Maximum CFM	1800 / 1700 *	-
Minimum Velocity Pressure	-	-
Maximum Velocity Pressure	.54	-
DDC Calibration Factor	-	.62
DDC Address	-	15

Room	Number	Size	Type	Ak	Design		Actual	
					Min CFM	Max CFM	Min CFM	Max CFM
562	1	48"-2SLOT-8"0	LSD A	-	-	170	-	-
562	2	48"-2SLOT-8"0	LSD A	-	-	170	-	-
562	3	48"-2SLOT-8"0	LSD A	-	-	170	-	-
562	4	48"-2SLOT-8"0	LSD A	-	-	170	-	-
562	5	48"-2SLOT-8"0	LSD A	-	-	170	-	-
562	6	48"-2SLOT-8"0	LSD A	-	-	170	-	-
562	7	48"-2SLOT-8"0	LSD A	-	-	170	-	-
562	8	48"-2SLOT-8"0	LSD A	-	-	170	-	-
562	9	48"-2SLOT-8"0	LSD A	-	-	170	-	-
562	10	48"-2SLOT-8"0	LSD A	-	-	170	-	-
					1380	1700	-	-

*OUTLET TOTAL

BOX DAMPER GEARS BROKE. DAMPER REMOVED WAITING ON PARTS FOR REPAIR.

Chesapeake Testing and Balancing, Inc.

VAV Box Test Data

Job Number: 14-285
System: AH-1

Date: 10/21/2014

UNIT INFORMATION	
Unit Number	VAV-1-16
Location	563
Area Served	563
Manufacturer	TRANE
Model Number	VCWD - 24
Primary Air Inlet Size	12"0 = .785

AIR MEASUREMENTS	DESIGN	ACTUAL
Minimum CFM	960	1060
Maximum CFM	2400 / 2300 *	1910 **
Minimum Velocity Pressure	-	-
Maximum Velocity Pressure	.47	-
DDC Calibration Factor	-	.43
DDC Address	-	-

Room	Number	Size	Type	Ak	Design		Actual	
					Min CFM	Max CFM	Min CFM	Max CFM
563	1	48"-2SLOTS-8"0	LSD B	-	-	230	100	185
563	2	48"-2SLOTS-8"0	LSD B	-	-	230	110	205
563	3	48"-2SLOTS-8"0	LSD B	-	-	230	105	190
563	4	48"-2SLOTS-8"0	LSD B	-	-	230	110	190
563	5	48"-2SLOTS-8"0	LSD B	-	-	230	105	185
563	6	48"-2SLOTS-8"0	LSD B	-	-	230	105	195
563	7	48"-2SLOTS-8"0	LSD B	-	-	230	105	195
563	8	48"-2SLOTS-8"0	LSD B	-	-	230	105	185
563	9	48"-2SLOTS-8"0	LSD B	-	-	230	105	195
563	10	48"-2SLOTS-8"0	LSD B	-	-	230	110	185
					960	2300	1060	1910

*OUTLET TOTAL

**BOX DAMPER 100% OPEN.

Chesapeake Testing and Balancing, Inc.

VAV Box Test Data

Job Number: 14-285
System: AH-1

Date: 10/21/2014

UNIT INFORMATION	
Unit Number	VAV-1-17
Location	560
Area Served	560
Manufacturer	TRANE
Model Number	VCWD-17
Primary Air Inlet Size	10"0 = .545

AIR MEASUREMENTS	DESIGN	ACTUAL
Minimum CFM	680	705
Maximum CFM	1700	1315 *
Minimum Velocity Pressure	-	-
Maximum Velocity Pressure	.47	-
DDC Calibration Factor	-	.36
DDC Address	-	-

Room	Number	Size	Type	Ak	Design		Actual	
					Min CFM	Max CFM	Min CFM	Max CFM
560	1	48"-2SLOTS-8"0	LSD A	-	-	170	70	125
560	2	48"-2SLOTS-8"0	LSD A	-	-	170	75	140
560	3	48"-2SLOTS-8"0	LSD A	-	-	170	75	130
560	4	48"-2SLOTS-8"0	LSD A	-	-	170	80	140
560	5	48"-2SLOTS-8"0	LSD A	-	-	170	70	120
560	6	48"-2SLOTS-8"0	LSD A	-	-	170	65	125
560	7	48"-2SLOTS-8"0	LSD A	-	-	170	60	120
560	8	48"-2SLOTS-8"0	LSD A	-	-	170	65	135
560	9	48"-2SLOTS-8"0	LSD A	-	-	170	75	145
560	10	48"-2SLOTS-8"0	LSD A	-	-	170	70	135
					680	1700	705	1315

*BOX DAMPER 100% OPEN.

Chesapeake Testing and Balancing, Inc.

VAV Box Test Data

Job Number: 14-285
System: AH-1

Date: 10/21/2014

UNIT INFORMATION	
Unit Number	VAV-1-18
Location	561
Area Served	561
Manufacturer	TRANE
Model Number	VCWD-24
Primary Air Inlet Size	12"0 = .785

AIR MEASUREMENTS	DESIGN	ACTUAL
Minimum CFM	920	910
Maximum CFM	2300	1780 *
Minimum Velocity Pressure	-	-
Maximum Velocity Pressure	.42	-
DDC Calibration Factor	-	.49
DDC Address	-	-

Room	Number	Size	Type	Ak	Design		Actual	
					Min CFM	Max CFM	Min CFM	Max CFM
561	1	48"-2SLOTS-8"0	LSD B	-	-	230	90	185
561	2	48"-2SLOTS-8"0	LSD B	-	-	230	95	195
561	3	48"-2SLOTS-8"0	LSD B	-	-	230	105	195
561	4	48"-2SLOTS-8"0	LSD B	-	-	230	90	175
561	5	48"-2SLOTS-8"0	LSD B	-	-	230	90	140
561	6	48"-2SLOTS-8"0	LSD B	-	-	230	90	185
561	7	48"-2SLOTS-8"0	LSD B	-	-	230	90	180
561	8	48"-2SLOTS-8"0	LSD B	-	-	230	100	190
561	9	48"-2SLOTS-8"0	LSD B	-	-	230	90	175
561	10	48"-2SLOTS-8"0	LSD B	-	-	230	70	160
					920	2300	910	1780

*BOX DAMPER 100% OPEN.

Chesapeake Testing and Balancing, Inc.

Diffuser And Grille Test Data

Job Number: 14-285
System: RF-1

Date: 10/29/2014

Room	Number	Size	Type	Ak	Design		Actual	
					FPM	CFM	FPM	CFM
581	1	48X24 (4)	RG	-	-	*	-	(1)
580	2	48X18 (3)	RH	-	-	*	-	(1)
580	3	48X18 (3)	RH	-	-	*	-	(1)
570	4	48X18	RH	5.4	-	*	761	4109
570	5	48X18	RH	5.4	-	*	667	3602
563	6	48X18	RH (2)	6.0	-	*	563	3378
563	7	48X18	RH (2)	6.0	-	*	457	2742
561	8	48X18	RH (2)	6.0	-	*	446	2676
561	9	48X18	RH (2)	6.0	-	*	472	2832
					Totals	23392		19339

*NO DESIGNS GIVEN.

(1) DUCTWORK CAPPED OFF ABOVE CEILING.

(2) RH NOT INSTALLED OED ONLY.

RH = PERF FACE TYPE.

Chesapeake Testing and Balancing, Inc.

Pump Test Data

Job Number: 14-285
System: CHILLED WATER PUMP-3

Date: 10/27/2014

PUMP INFORMATION			
Pump Number	P-3		
Location	584B MECH RM		
System Served	CHILLED WATER		
Manufacturer	B&G		
Model Number	4X6XLL L50		

PUMP MEASUREMENTS	Design	Actual		Design	Actual
Pump GPM	725	725 **			
System Required GPM	701 *	725 **			
Head Pressure - Ft. of Head	85	84.8			
Discharge Pressure - PSI	-	73.4			
Suction Pressure - PSI	-	36.7			
Discharge Valve Setting	-	10% OPEN			
No Flow Pressure - Ft. of Head	-	105.9'			
Impeller Size	10.3"	-			
Diff. Press. Set Point	-	-			

MOTOR MEASUREMENTS	Design	Actual		Design	Actual
Motor HP	25	19.5			
Motor Voltage - Leg1 / Leg2 / Leg3	460	484/483/482			
Motor Phase	3	3			
Motor Amps - Leg1 / Leg2 / Leg3	32.4	24.1/23.2/24.6			
Motor Service Factor	1.15	1.15			
Motor RPM	1,755	1,755			
VFD Hz. Setting	-	-			
Overload Protection	-	-			

*PER 1991 DRAWING EQUIP SCHEDULE

**GPM PER PUMP HEAD.

TDV AT 100% OPEN 64.1' TDH

Chesapeake Testing and Balancing, Inc.

Cooling Coil Test Data

Job Number: 14-285
System: CHILLED WATER

Date: 10/28/2014

COIL INFORMATION					
Unit Number	AH-1				
Location	MECH RM				
COIL PERFORMANCE	**Design**	**Actual**		**Design**	**Actual**
CFM	29570 *	22,896			
GPM	202	193 ***			
Entering Water Temperature	45 ?	50 **			
Leaving Water Temperature	55 ?	55 **			
Entering Air Temperature - D.B.	77.2	75			
Entering Air Temperature - W.B.	64.5	64			
Leaving Air Temperature - D.B.	55	55			
Leaving Air Temperature - W.B.	54.7	54			
Air MBH	-	-			
Water MBH	-	-			

COIL INFORMATION					
Unit Number					
Location					
COIL PERFORMANCE	**Design**	**Actual**		**Design**	**Actual**
CFM					
GPM					
Entering Water Temperature					
Leaving Water Temperature					
Entering Air Temperature - D.B.					
Entering Air Temperature - W.B.					
Leaving Air Temperature - D.B.					
Leaving Air Temperature - W.B.					
Air MBH					
Water MBH					

OUTSIDE CONDITIONS 79 DB 65 WB
*CFM VAV BOX TOTAL = 26,692
**PER BAS INSTALLED TEMP WELLS READING 58F ENTERING 56F LEAVING. NO PORTS INSTALLED TO VERFIY.
***FLOW METER READING WITH AH-1 COIL OPEN & AH-2-4 CONTROLLING.

Chesapeake Testing and Balancing, Inc.

Flow Meter Test Data

Job Number: 14-285
System: CHILLED WATER AH-1

Date: 10/27/2014

Location	Size	Manufacturer	Model	Valve Setting	Design		Actual	
					△ P	GPM	△P	GPM
AH-1	4"	B&G	-	0 *	-	202.00	1.7'	206.00
AH-2	-	-	-	-	-	264.00	-	-
AH-3	-	-	-	-	-	179.00	-	-
AH-4	-	-	-	-	-	56.00	-	-
					Totals	701.00		206.00

*COULD NOT MOVE OFF O SETTING USED BLUE MAIN RETURN WATER VALVE. SET AND MARKED.

Chesapeake Testing and Balancing, Inc.

Pump Test Data

Job Number: 14-285
System: HEATING WATER

Date: 10/22/2014

PUMP INFORMATION			
Pump Number	P-1		P-2
Location	584B MECH RM		584B MECH RM
System Served	HEATING WATER CARTER BLDG		HEATING WATER CARTER BLDG
Manufacturer	B&G		B&G
Model Number	3BB 1510F		3BB 1510F

PUMP MEASUREMENTS	Design	Actual		Design	Actual
Pump GPM	300	300 PLUS *		300	300 PLUS *
System Required GPM	-	-		-	-
Head Pressure - Ft. of Head	65	63.3		65	63.0
Discharge Pressure - PSI	-	45.5		-	45.1
Suction Pressure - PSI	-	18.1		-	17.8
Discharge Valve Setting	TDV	20% OPEN		TDV	22% OPEN
No Flow Pressure - Ft. of Head	-	80.6		-	80.3
Impeller Size	8-5/8 BF	-		8-5/8 BF	-
Diff. Press. Set Point	-	-		-	-

MOTOR MEASUREMENTS	Design	Actual		Design	Actual
Motor HP	7.5	7.3		7.5	7.4
Motor Voltage - Leg1 / Leg2 / Leg3	460	478/480/479		460	480/482/479
Motor Phase	3	3		3	3
Motor Amps - Leg1 / Leg2 / Leg3	9.7	9.1/8.7/9.4		10.8	10.3/10.0/10.4
Motor Service Factor	1.15	1.15		1.15	1.15
Motor RPM	1,745	1,745		1,750	1,750
VFD Hz. Setting	-	-		-	-
Overload Protection	-	-		-	-

BOTH PUMPS AT APPROX. 58TDH WOULD W TDV OPEN 100%
*NEED PUMP CURVE TO PLOT GPM.

Chesapeake Testing and Balancing, Inc.

Flow Meter Test Data

Job Number: 14-285 Date: 10/20/2014
System: HEATING WATER PARTIAL SYSTEM BALANCE

Location	Size	Manufacturer	Model	Valve Setting	Design		Actual	
					△ P	GPM	△P	GPM
AH-1	2"	B&G	-	44	-	19.10	36.8'	18.80
VAV-1-1	1"	B&G	-	0	-	9.64	4.4'	7.90
VAV-1-2	3/4" S	B&G	-	50	-	1.23	33.8'	1.90
VAV-1-3	3/4" S	B&G	-	46	-	2.33	33.1'	2.40
VAV-1-4	3/4" S	B&G	-	46	-	1.00	31.2'	1.06
VAV-1-5	3/4" S	B&G	-	46	-	1.00	28.2'	1.00
VAV-1-6	3/4" S	B&G	-	46	-	1.00	29.6'	1.02
VAV-1-7	3/4" S	B&G	-	44	-	1.25	35.6'	1.29
VAV-1-8	3/4" S	B&G	-	44	-	1.25	31.6'	1.22
VAV-1-9R	3/4" S	B&G	-	36	-	3.20	25.3'	3.22
VAV-1-10R	3/4" S	B&G	-	0	-	6.50	7.1'	6.13
VAV-1-12R	3/4" S	B&G	-	38	-	3.20	28.5'	3.32
VAV-1-13R	3/4" S	B&G	-	0	-	6.50	3.8'	3.82
VAV-1-14	3/4"	B&G	-	0	-	5.81	9.2'	5.56
VAV-1-15	3/4"	B&G	-	22	-	3.67	22'	3.70
VAV1-16	3/4"	B&G	-	0	-	4.78	5.9'	4.45
VAV-1-17	3/4"	B&G	-	14	-	3.59	10.3'	3.63
VAV-1-18	3/4"	B&G	-	0	-	4.67	5.4'	4.26
FIN TUBE 209	3/4" S	B&G	-	50	-	0.93	35.6'	1.94
FIN TUBE 581	3/4" S	B&G	-	50	-	0.47	29.9'	1.77
FIN TUBE 580	3/4" S	B&G	-	50	-	0.47	-	*
FIN TUBE 570	3/4"	B&G	-	50	-	0.73	-	*
FIN TUBE 563	3/4"	B&G	-	50	-	0.47	16.5'	0.58
FIN TUBE 561	3/4"	B&G	-	50	-	0.47	17.0'	0.59
FIN TUBE CORR 175	3/4"	B&G	-	14	-	0.47	17.5'	4.73
					Totals	83.73		84.29

*BAS NOT CONTROLLING VALVE - VALVE IN CLOSED POSITION VALVE SETTING AS SHOWN.

Diagram

Job Number: 14-285

System: BOILER & CHILLER WATER PLANT PRINT OUT

Date: 10/20/2014

REFER TO NEXT PAGE

DELAWARE TECHNICAL ◆ COMMUNITY COLLEGE

CARTER PARTNERSHIP CENTER
BOILER AND CHILLED WATER PLANT

OAT 74.43 DEG F | OAH 20.54 PERCNT

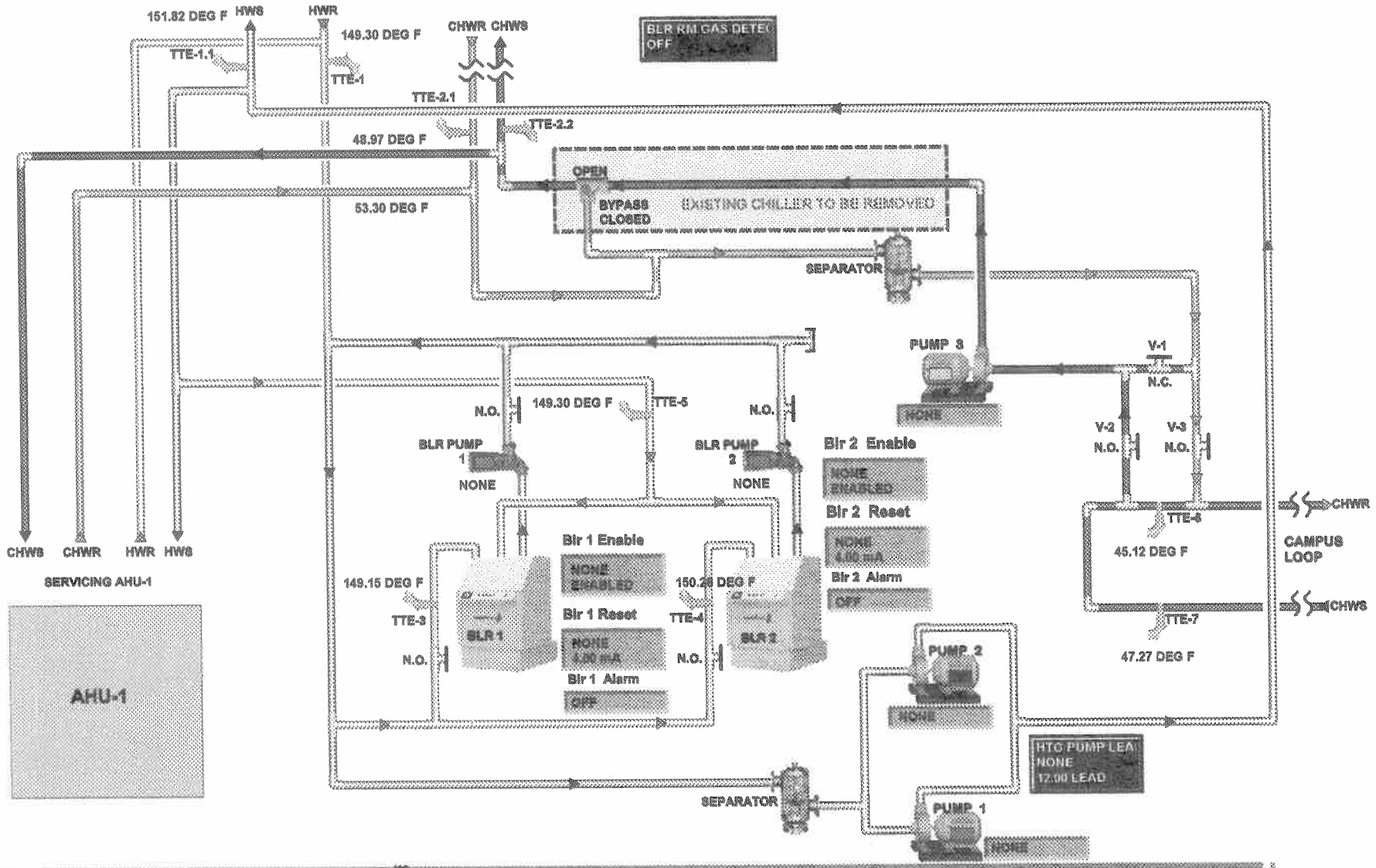

SIEMENS

Carter Partnership Center

DELAWARE TECH

SECTION 004100: BID FORM

PART 1 GENERAL

1.1 DESCRIPTION

A. Copy of bid Form is bound herein

PART 2 PRODUCTS

NOT USED

PART 3 EXECUTION

NOT USED

END OF SECTION

SECTION 004100: BID FORM

GENERAL CONSTRUCTION CONTRACT

Date:

PROJECT IDENTIFICATION: **DELAWARE TECHNICAL COMMUNITY COLLEGE**
OWENS CAMPUS CARTER CENTER FUME HOOD VENTILATION SYSTEM
GEORGETOWN, SUSSEX COUNTY, DELAWARE

BID TO: **DELAWARE TECHNICAL COMMUNITY COLLEGE**

BID FROM: _____
_____
_____

1. The undersigned BIDDER agrees, if this Bid is accepted, to enter into an agreement with OWNER, on the form included in the Bidding Documents, to perform and furnish and Work as specified or indicated in the Bidding Documents, for the Bid Price and within the Bid Times indicated in this Bid and in accordance with the other terms and conditions of the Contract Documents.

2. In submitting this Bid, BIDDER represents, as more fully set forth in the Agreement, that:

   a. This Bid will remain subject to acceptance for ninety (90) days after the day of Bid opening;
   b. The Owner has the right to reject this Bid;
   c. BIDDER accepts the provisions of the Instructions and Supplementary Instructions to Bidders regarding disposition of Bid Security;
   d. BIDDER will sign and submit the Agreement with the Bonds and other documents required by the Bidding Requirements within 15 days after the date of OWNER'S Notice of Award;
   e. BIDDER has examined copies of all the Bidding Documents;
   f. BIDDER has visited the site and become familiar with the general, local, and site conditions;
   g. BIDDER is familiar with federal, state, and local laws and regulations;
   h. BIDDER has correlated the information known to BIDDER, information and observations obtained from visits to the site, reports and drawings identified in the Bidding Documents and additional examinations, investigations, explorations, tests, studies, and data with the Bidding documents;
   i. The Bid is genuine and not made in the interest of or on behalf of an undisclosed person, firm, or corporation and is not submitted in conformity with an agreement or rules of a group, association, organization, or corporation. BIDDER has not directly or indirectly induced or solicited another Bidder to submit a false or sham Bid: BIDDER has not solicited or induced a person, firm, or corporation to refrain from bidding; and BIDDER has not sought by collusion to obtain for itself an advantage over another BIDDER or over OWNER.
   j. BIDDER has received the following Addenda receipt of which is hereby acknowledged:
      Addendum No. _____ Dated _____ Addendum No. _____ Dated
      Addendum No. _____ Dated _____ Addendum No. _____ Dated
      Addendum No. _____ Dated _____ Addendum No. _____ Dated

3. Delivery Time: BIDDER will indicate in weeks the delivery time from an approved submittal for Fume Hood Exhaust Fans: _____weeks."

4. BIDDER will complete the Work in accordance with the Contract Documents for the following price:

STIPULATED-SUM BID PRICE (also known as Base Bid) _____
($ _____) (use words)
(figures)

5. BIDDER agrees that the Work will be substantially complete and ready for final payment in accordance with the General Conditions on or before the dates or within the number of calendar days indicated in the Agreement.

6. The Owner shall retain the sum of Five Hundred Dollars ($500.00) for each calendar day in excess of the completion date set forth in the Contract Documents as liquidated damages and not as a penalty.

7. The following documents are attached to and made a condition of this Bid:

   (a) the State of Delaware Office of Management and Budget - Bid Bond
   (b) 004350 Subcontractor's Listing Form
   (c) 004500 Affidavit of Qualification to Bid
   (d) 004600 Affidavit I Non-Collusion Certificate
   (e) 004700 Affidavit II Disclosure of Interest by Persons Doing Business with Delaware Technical and Community College

_____ , being first duly sworn deposes and says that he is an officer in the building construction organization known as _____ , and the party making a certain proposal or bid dated _____ , 2018, to DELAWARE TECHNICAL COMMUNITY COLLEGE and that this bid is genuine and not collusive or sham; that said bidder has not colluded, conspired, connived or agreed, directly or indirectly, with any bidder or person to put in sham bid or to refrain from bidding, and has not in any manner, directly or indirectly, sought by agreement or collusion, or communication or conference, with any person to fix the bid prices or the affidavit or any other bidder, or to fix any overhead, profit or cost element of said bid price, or that of any bidder, or to secure any advantage against the owner or any other person interested in the proposed contract; and that all statements is said proposal or bid are true.

Signature of:

x
Bidder if the bidder is an individual

x
Partner if the bidder is a partnership

x
Officer if the bidder is a corporation

Registered Delaware Contractor No.

Subscribed and sworn before me this _____ day of _____ , 2018.

x
Notary Public

My commission expires: _____ , _____ .

END OF SECTION

SECTION 004350: SUBCONTRACTOR'S/MANUFACTURER'S LISTING FORM

PART 1 GENERAL

1.1 DESCRIPTION

A. Copy of Subcontractor's Listing Form is bound herein.

PART 2 PRODUCTS

NOT USED

PART 3 EXECUTION

NOT USED

END OF SECTION

SECTION 004350: SUBCONTRACTOR'S/MANUFACTURER'S LISTING FORM

If awarded this contract, we, _____ , (name of bidder) will award subcontracts to the following subcontractors/manufacturer's. Where we intend to perform the work with our own forces, our name is listed as subcontractor. This form is to be submitted to the same location as the bid, no later than one hour after time of receipt of Bids.

Mechanical Name: _____

Address: _____

Automatic Temperature Control Name: _____

Address: _____

Electrical Name: _____

Address: _____

_____ _____
(date) Firm Name

_____
Signature

END OF SECTION

SECTION 004500: AFFIDAVIT OF QUALIFICATION TO BID

PART 1 GENERAL

1.1 DESCRIPTION

A. Copy of Affidavit of Qualifications to Bid.

PART 2 PRODUCTS

NOT USED

PART 3 EXECUTION

NOT USED

END OF SECTION

SECTION 004500: AFFIDAVIT OF QUALIFICATION TO BID

I hereby affirm that

1. I am the _____ and the duly authorized representative of the firm
(Title)

_____ whose address is_____and that I posses the legal authority to make this affidavit on behalf of myself and the firm for which I am acting.

2. Except as described in paragraph 3 below, I nor the firm, nor to the best of my knowledge, any of its officers, directors, or partners, or any of its employees directly involved in obtaining contracts with the State or any county, bi-county or multi-county agency, or subdivision of the State have been convicted of, or have pleaded nolo contendere to a charge of, or having during the course of an official investigation or other proceeding admitted in writing or under oath acts of omissions which constitute bribery, attempted bribery, or conspiracy to bribe under the provisions of the Annotated Code of Delaware or under the laws of any state or the Federal Government (conduct prior to July 1, 1977 is not required to be reported).

3. State "none" or, as appropriate, list any conviction, plea, or admission described in paragraph 2 above, with the date, court, official, or administrative body; the individuals involved and their position with the firm, and sentence or disposition if any.

I acknowledge that this affidavit is to be furnished to Delaware Technical Community College and, where appropriate to the State of Delaware and to the Attorney General under the Annotated Code of Delaware. I acknowledge that, if the representations set forth in this affidavit are not true and correct, the Delaware Technical Community College may terminate any contract awarded and take any other appropriate action. I further acknowledge that I am executing this affidavit in compliance with the Annotated Code of Delaware, which provides that certain persons who have been convicted of or have admitted to bribery, attempted bribery, or conspiracy to bribe may be disqualified, either by operation of law or after a hearing, from entering in to contract with the State or any of its agencies or subdivisions.

I do solemnly declare and affirm under the penalties of perjury that the contents of this affidavit are true and correct.

Subscribed and sworn to be before me

(signature)

on this _____ date of _____, 20____.

_____

(Notary) (date)

My commission expires

END OF SECTION

SECTION 004600: AFFIDAVIT I NON-COLLUSION CERTIFICATE

PART 1 GENERAL

1.1 DESCRIPTION

A. Copy of Affidavit I Non-Collusion Certificate.

PART 2 PRODUCTS

NOT USED

PART 3 EXECUTION

NOT USED

END OF SECTION

Bid No.: _____

TITLE: **DELAWARE TECHNICAL COMMUNITY COLLEGE**
GEORGETOWN CARTER CENTER HOOD
SUSSEX COUNTY, GEORGETOWN, DELAWARE

NON-COLLUSION CERTIFICATE

COUNTY OF: _____

STATE OF: _____

Before me, the undersigned, a Notary Public, in and for the County and State aforesaid, personally appeared _____ _____ and made oath in due form of law that the Respondent herein, his Agents, servants and/or employees, to the best of his knowledge and belief, have not in any way colluded with anyone for and on behalf of the Respondent, or themselves, to obtain information that would give the Respondent an unfair advantage over others, nor have they colluded with anyone for and on behalf of the Respondent, or themselves, to gain any favoritism in the award of the Contract herein.

_____

(NOTARY PUBLIC)

SECTION 004700: AFFIDAVIT II DISCLOSURE OF INTEREST BY PERSONS DOING BUSINESS WITH DELAWARE TECHNICAL COMMUNITY COLLEGE

PART 1 GENERAL

1.1 DESCRIPTION

A. Copy of Affidavit II Disclosure of Interest by Persons Doing Business with Delaware Technical Community College

PART 2 PRODUCTS

NOT USED

PART 3 EXECUTION

NOT USED

END OF SECTION

TITLE: **DELAWARE TECHNICAL COMMUNITY COLLEGE**
GEORGETOWN CARTER CENTER HOOD
SUSSEX COUNTY, GEORGETOWN, DELAWARE

DISCLOSURE OF INTEREST BY PERSONS DOING BUSINESS WITH DELAWARE TECHNICAL COMMUNITY COLLEGE

The undersigned does hereby declare that no officer or employee of DELAWARE TECHNICAL COMMUNITY COLLEGE, whether elected or appointed has in any manner whatsoever any interest in or has received prior to hereto or will receive subsequent hereto any benefit, monetary or material consideration from the profits or emoluments of this contract, job, work or service for the DELAWARE TECHNICAL COMMUNITY COLLEGE, and that no officer or employee has accepted or received or will receive, directly or indirectly, any part of any fee, commission or other compensation paid or payable by the DELAWARE TECHNICAL COMMUNITY COLLEGE in connection with the contract, job, work, or service for the DELAWARE TECHNICAL COMMUNITY COLLEGE, excepting, however, the receipt of dividend or corporation stock.

I, we do solemnly declare and affirm under the penalties of perjury that the contents of the foregoing affidavit are true and correct to the best of my knowledge, information and belief.

_____
DATE

_____
SIGNATURE

_____
PRINTED NAME AND TITLE

FIRM NAME AND ADDRESS _____

_____

_____

TELEPHONE NUMBER _____

EMAIL _____

SECTION 004900 - BIDDING ADDENDA FORMAT

Addenda where necessary, will be issued by Gipe Associates, Inc. Contractors who have left a deposit for Drawings and Specification will be contacted to inform them an Addenda is being issued. Contractors wishing to have the Addenda sent by Federal Express or couriered must make arrangements with Gipe Associates, Inc. to cover the cost of postage or handling. Addenda issued 5 days or less to the bid date will be faxed if the Bidder has provided his fax number.

Addenda format will be as follows:

SPECIFICATIONS

Section No.	Section Name
Page No.	Article, paragraph, Subparagraph
Action:	Text

DRAWINGS

Drawing No.	Detail No.
Action:	Text

SPECIFICATION ACTION DEFINITIONS

REVISED:	Change a small portion of a particular paragraph. the change portion will be shown in *Italics.*
ADD:	Add a section, article, paragraph, or subparagraph to the Project Manual. This does not delete any existing information.
DELETE:	Remove a section, article, paragraph or subparagraph from the Project Manual.
SUBSTITUTE:	Delete the existing section, article, paragraph or subparagraph and substitute in its place the Addenda information.
CLARIFY:	If there is some ambiguity or confusion regarding a section, article, paragraph or subparagraph it would be clarified here.

DRAWING ACTION DEFINITIONS

REVISED:	Change a dimension, notes or similar small modifications to an existing drawing or detail.
ADD:	Add a note, detail or drawing to an existing drawing.
DELETE:	Remove a note, detail or drawing from the Contract Documents.
SUBSTITUTE:	Delete the existing detail or drawing and replace it with the new drawing or detail provided in the Addendum.
CLARIFY:	This will be used to give a written clarification of the drawing information

END OF SECTION

SECTION 005000: STANDARD FORM OF AGREEMENT BETWEEN OWNER AND CONTRACTOR

PART 1 GENERAL

1.1 DESCRIPTION

A. Copy of Standard Form of Agreement Between Owner and Contractor - 2007 edition is bound herein.

B. Delaware Technical Community College A101 Amendment is also bound herein.

PART 2 PRODUCTS

NOT USED

PART 3 EXECUTION

NOT USED

END OF SECTION

AIA® Document A101™ – 2007

Standard Form of Agreement Between Owner and Contractor where the basis of payment is a Stipulated Sum

AGREEMENT made as of the day of in the year
(In words, indicate day, month and year.)

BETWEEN the Owner:
(Name, legal status, address and other information)

and the Contractor:
(Name, legal status, address and other information)

for the following Project:
(Name, location and detailed description)

The Architect:
(Name, legal status, address and other information)

The Owner and Contractor agree as follows.

ADDITIONS AND DELETIONS: The author of this document has added information needed for its completion. The author may also have revised the text of the original AIA standard form. An *Additions and Deletions Report* that notes added information as well as revisions to the standard form text is available from the author and should be reviewed. A vertical line in the left margin of this document indicates where the author has added necessary information and where the author has added to or deleted from the original AIA text.

This document has important legal consequences. Consultation with an attorney is encouraged with respect to its completion or modification.

AIA Document A201™–2007, General Conditions of the Contract for Construction, is adopted in this document by reference. Do not use with other general conditions unless this document is modified.

SAMPLE

AIA Document A101™ – 2007. Copyright © 1915, 1918, 1925, 1937, 1951, 1958, 1961, 1963, 1967, 1974, 1977, 1987, 1991, 1997 and 2007 by The American Institute of Architects. **All rights reserved.** WARNING: This AIA® Document is protected by U.S. Copyright Law and International Treaties. Unauthorized reproduction or distribution of this AIA® Document, or any portion of it, may result in severe civil and criminal penalties, and will be prosecuted to the maximum extent possible under the law. This document was produced by AIA software at 11:29:24 on 07/22/2010 under Order No.1410090278_1 which expires on 01/22/2011, and is not for resale.
User Notes:

(2033806930)

TABLE OF ARTICLES

1 THE CONTRACT DOCUMENTS

2 THE WORK OF THIS CONTRACT

3 DATE OF COMMENCEMENT AND SUBSTANTIAL COMPLETION

4 CONTRACT SUM

5 PAYMENTS

6 DISPUTE RESOLUTION

7 TERMINATION OR SUSPENSION

8 MISCELLANEOUS PROVISIONS

9 ENUMERATION OF CONTRACT DOCUMENTS

10 INSURANCE AND BONDS

ARTICLE 1 THE CONTRACT DOCUMENTS

The Contract Documents consist of this Agreement, Conditions of the Contract (General, Supplementary and other Conditions), Drawings, Specifications, Addenda issued prior to execution of this Agreement, other documents listed in this Agreement and Modifications issued after execution of this Agreement, all of which form the Contract, and are as fully a part of the Contract as if attached to this Agreement or repeated herein. The Contract represents the entire and integrated agreement between the parties hereto and supersedes prior negotiations, representations or agreements, either written or oral. An enumeration of the Contract Documents, other than a Modification, appears in Article 9.

ARTICLE 2 THE WORK OF THIS CONTRACT

The Contractor shall fully execute the Work described in the Contract Documents, except as specifically indicated in the Contract Documents to be the responsibility of others.

ARTICLE 3 DATE OF COMMENCEMENT AND SUBSTANTIAL COMPLETION

§ 3.1 The date of commencement of the Work shall be the date of this Agreement unless a different date is stated below or provision is made for the date to be fixed in a notice to proceed issued by the Owner.
(Insert the date of commencement if it differs from the date of this Agreement or, if applicable, state that the date will be fixed in a notice to proceed.)

If, prior to the commencement of the Work, the Owner requires time to file mortgages and other security interests, the Owner's time requirement shall be as follows:

§ 3.2 The Contract Time shall be measured from the date of commencement.

§ 3.3 The Contractor shall achieve Substantial Completion of the entire Work not later than ( ) days from the date of commencement, or as follows:
(Insert number of calendar days. Alternatively, a calendar date may be used when coordinated with the date of commencement. If appropriate, insert requirements for earlier Substantial Completion of certain portions of the Work.)

SAMPLE

AIA Document A101™ – 2007. Copyright © 1915, 1918, 1925, 1937, 1951, 1958, 1961, 1963, 1967, 1974, 1977, 1987, 1991, 1997 and 2007 by The American Institute of Architects. All rights reserved. WARNING: This AIA® Document is protected by U.S. Copyright Law and International Treaties. Unauthorized reproduction or distribution of this AIA® Document, or any portion of it, may result in severe civil and criminal penalties, and will be prosecuted to the maximum extent possible under the law. This document was produced by AIA software at 11:29:24 on 07/22/2010 under Order No.1410090278_1 which expires on 01/22/2011, and is not for resale.
User Notes:

(2033806930)

Portion of Work	Substantial Completion Date

, subject to adjustments of this Contract Time as provided in the Contract Documents.
(Insert provisions, if any, for liquidated damages relating to failure to achieve Substantial Completion on time or for bonus payments for early completion of the Work.)

ARTICLE 4 CONTRACT SUM

§ 4.1 The Owner shall pay the Contractor the Contract Sum in current funds for the Contractor's performance of the Contract. The Contract Sum shall be ($), subject to additions and deductions as provided in the Contract Documents.

§ 4.2 The Contract Sum is based upon the following alternates, if any, which are described in the Contract Documents and are hereby accepted by the Owner:
(State the numbers or other identification of accepted alternates. If the bidding or proposal documents permit the Owner to accept other alternates subsequent to the execution of this Agreement, attach a schedule of such other alternates showing the amount for each and the date when that amount expires.)

§ 4.3 Unit prices, if any:
(Identify and state the unit price; state quantity limitations, if any, to which the unit price will be applicable.)

Item	Units and Limitations	Price Per Unit ($0.00)

§ 4.4 Allowances included in the Contract Sum, if any:
(Identify allowance and state exclusions, if any, from the allowance price.)

Item	Price

ARTICLE 5 PAYMENTS

§ 5.1 PROGRESS PAYMENTS

§ 5.1.1 Based upon Applications for Payment submitted to the Architect by the Contractor and Certificates for Payment issued by the Architect, the Owner shall make progress payments on account of the Contract Sum to the Contractor as provided below and elsewhere in the Contract Documents.

§ 5.1.2 The period covered by each Application for Payment shall be one calendar month ending on the last day of the month, or as follows:

§ 5.1.3 Provided that an Application for Payment is received by the Architect not later than the day of a month, the Owner shall make payment of the certified amount to the Contractor not later than the day of the month. If an Application for Payment is received by the Architect after the application date fixed above, payment shall be made by the Owner not later than ( ) days after the Architect receives the Application for Payment.
(Federal, state or local laws may require payment within a certain period of time.)

§ 5.1.4 Each Application for Payment shall be based on the most recent schedule of values submitted by the Contractor in accordance with the Contract Documents. The schedule of values shall allocate the entire Contract Sum among the various portions of the Work. The schedule of values shall be prepared in such form and supported by such data to substantiate its accuracy as the Architect may require. This schedule, unless objected to by the Architect, shall be used as a basis for reviewing the Contractor's Applications for Payment.

SAMPLE

AIA Document A101™ – 2007. Copyright © 1915, 1918, 1925, 1937, 1951, 1958, 1961, 1963, 1967, 1974, 1977, 1987, 1991, 1997 and 2007 by The American Institute of Architects. All rights reserved. WARNING: This AIA® Document is protected by U.S. Copyright Law and International Treaties. Unauthorized reproduction or distribution of this AIA® Document, or any portion of it, may result in severe civil and criminal penalties, and will be prosecuted to the maximum extent possible under the law. This document was produced by AIA software at 11:29:24 on 07/22/2010 under Order No.1410090278_1 which expires on 01/22/2011, and is not for resale.
User Notes:
(2033806930)

§ **5.1.5** Applications for Payment shall show the percentage of completion of each portion of the Work as of the end of the period covered by the Application for Payment.

§ **5.1.6** Subject to other provisions of the Contract Documents, the amount of each progress payment shall be computed as follows:

.1 Take that portion of the Contract Sum properly allocable to completed Work as determined by multiplying the percentage completion of each portion of the Work by the share of the Contract Sum allocated to that portion of the Work in the schedule of values, less retainage of percent (%). Pending final determination of cost to the Owner of changes in the Work, amounts not in dispute shall be included as provided in Section 7.3.9 of AIA Document A201™–2007, General Conditions of the Contract for Construction;

.2 Add that portion of the Contract Sum properly allocable to materials and equipment delivered and suitably stored at the site for subsequent incorporation in the completed construction (or, if approved in advance by the Owner, suitably stored off the site at a location agreed upon in writing), less retainage of percent (%);

.3 Subtract the aggregate of previous payments made by the Owner; and

.4 Subtract amounts, if any, for which the Architect has withheld or nullified a Certificate for Payment as provided in Section 9.5 of AIA Document A201–2007.

§ **5.1.7** The progress payment amount determined in accordance with Section 5.1.6 shall be further modified under the following circumstances:

.1 Add, upon Substantial Completion of the Work, a sum sufficient to increase the total payments to the full amount of the Contract Sum, less such amounts as the Architect shall determine for incomplete Work, retainage applicable to such work and unsettled claims; and
(Section 9.8.5 of AIA Document A201–2007 requires release of applicable retainage upon Substantial Completion of Work with consent of surety, if any.)

.2 Add, if final completion of the Work is thereafter materially delayed through no fault of the Contractor, any additional amounts payable in accordance with Section 9.10.3 of AIA Document A201–2007.

§ **5.1.8** Reduction or limitation of retainage, if any, shall be as follows:
(If it is intended, prior to Substantial Completion of the entire Work, to reduce or limit the retainage resulting from the percentages inserted in Sections 5.1.6.1 and 5.1.6.2 above, and this is not explained elsewhere in the Contract Documents, insert here provisions for such reduction or limitation.)

§ **5.1.9** Except with the Owner's prior approval, the Contractor shall not make advance payments to suppliers for materials or equipment which have not been delivered and stored at the site.

§ 5.2 FINAL PAYMENT

§ **5.2.1** Final payment, constituting the entire unpaid balance of the Contract Sum, shall be made by the Owner to the Contractor when

.1 the Contractor has fully performed the Contract except for the Contractor's responsibility to correct Work as provided in Section 12.2.2 of AIA Document A201–2007, and to satisfy other requirements, if any, which extend beyond final payment; and

.2 a final Certificate for Payment has been issued by the Architect.

§ **5.2.2** The Owner's final payment to the Contractor shall be made no later than 30 days after the issuance of the Architect's final Certificate for Payment, or as follows:

ARTICLE 6 DISPUTE RESOLUTION

§ 6.1 INITIAL DECISION MAKER

The Architect will serve as Initial Decision Maker pursuant to Section 15.2 of AIA Document A201–2007, unless the parties appoint below another individual, not a party to this Agreement, to serve as Initial Decision Maker.

SAMPLE

AIA Document A101™ – 2007. Copyright © 1915, 1918, 1925, 1937, 1951, 1958, 1961, 1963, 1967, 1974, 1977, 1987, 1991, 1997 and 2007 by The American Institute of Architects. All rights reserved. WARNING: This AIA® Document is protected by U.S. Copyright Law and International Treaties. Unauthorized reproduction or distribution of this AIA® Document, or any portion of it, may result in severe civil and criminal penalties, and will be prosecuted to the maximum extent possible under the law. This document was produced by AIA software at 11:29:24 on 07/22/2010 under Order No.1410090278_1 which expires on 01/22/2011, and is not for resale.
User Notes:

(2033806930)

(If the parties mutually agree, insert the name, address and other contact information of the Initial Decision Maker, if other than the Architect.)

§ 6.2 BINDING DISPUTE RESOLUTION

For any Claim subject to, but not resolved by, mediation pursuant to Section 15.3 of AIA Document A201–2007, the method of binding dispute resolution shall be as follows:
(Check the appropriate box. If the Owner and Contractor do not select a method of binding dispute resolution below, or do not subsequently agree in writing to a binding dispute resolution method other than litigation, Claims will be resolved by litigation in a court of competent jurisdiction.)

[ ] Arbitration pursuant to Section 15.4 of AIA Document A201–2007

[ ] Litigation in a court of competent jurisdiction

[ ] Other *(Specify)*

ARTICLE 7 TERMINATION OR SUSPENSION

§ 7.1 The Contract may be terminated by the Owner or the Contractor as provided in Article 14 of AIA Document A201–2007.

§ 7.2 The Work may be suspended by the Owner as provided in Article 14 of AIA Document A201–2007.

ARTICLE 8 MISCELLANEOUS PROVISIONS

§ 8.1 Where reference is made in this Agreement to a provision of AIA Document A201–2007 or another Contract Document, the reference refers to that provision as amended or supplemented by other provisions of the Contract Documents.

§ 8.2 Payments due and unpaid under the Contract shall bear interest from the date payment is due at the rate stated below, or in the absence thereof, at the legal rate prevailing from time to time at the place where the Project is located.
(Insert rate of interest agreed upon, if any.)

%

§ 8.3 The Owner's representative:
(Name, address and other information)

§ 8.4 The Contractor's representative:
(Name, address and other information)

SAMPLE

AIA Document A101™ – 2007. Copyright © 1915, 1918, 1925, 1937, 1951, 1958, 1961, 1963, 1967, 1974, 1977, 1987, 1991, 1997 and 2007 by The American Institute of Architects. **All rights reserved.** WARNING: This AIA® Document is protected by U.S. Copyright Law and International Treaties. Unauthorized reproduction or distribution of this AIA® Document, or any portion of it, may result in severe civil and criminal penalties, and will be prosecuted to the maximum extent possible under the law. This document was produced by AIA software at 11:29:24 on 07/22/2010 under Order No.1410090278_1 which expires on 01/22/2011, and is not for resale.
User Notes:

§ 8.5 Neither the Owner's nor the Contractor's representative shall be changed without ten days written notice to the other party.

§ 8.6 Other provisions:

ARTICLE 9 ENUMERATION OF CONTRACT DOCUMENTS

§ 9.1 The Contract Documents, except for Modifications issued after execution of this Agreement, are enumerated in the sections below.

§ 9.1.1 The Agreement is this executed AIA Document A101–2007, Standard Form of Agreement Between Owner and Contractor.

§ 9.1.2 The General Conditions are AIA Document A201–2007, General Conditions of the Contract for Construction.

§ 9.1.3 The Supplementary and other Conditions of the Contract:

Document	Title	Date	Pages

§ 9.1.4 The Specifications:
(Either list the Specifications here or refer to an exhibit attached to this Agreement.)

Section	Title	Date	Pages

§ 9.1.5 The Drawings:
(Either list the Drawings here or refer to an exhibit attached to this Agreement.)

Number	Title	Date

§ 9.1.6 The Addenda, if any:

Number	Date	Pages

Portions of Addenda relating to bidding requirements are not part of the Contract Documents unless the bidding requirements are also enumerated in this Article 9.

§ 9.1.7 Additional documents, if any, forming part of the Contract Documents:

.1 AIA Document E201™–2007, Digital Data Protocol Exhibit, if completed by the parties, or the following:

.2 Other documents, if any, listed below:
(List here any additional documents that are intended to form part of the Contract Documents. AIA Document A201–2007 provides that bidding requirements such as advertisement or invitation to bid, Instructions to Bidders, sample forms and the Contractor's bid are not part of the Contract Documents

SAMPLE

AIA Document A101™ – 2007. Copyright © 1915, 1918, 1925, 1937, 1951, 1958, 1961, 1963, 1967, 1974, 1977, 1987, 1991, 1997 and 2007 by The American Institute of Architects. All rights reserved. WARNING: This AIA® Document is protected by U.S. Copyright Law and International Treaties. Unauthorized reproduction or distribution of this AIA® Document, or any portion of it, may result in severe civil and criminal penalties, and will be prosecuted to the maximum extent possible under the law. This document was produced by AIA software at 11:29:24 on 07/22/2010 under Order No.1410090278_1 which expires on 01/22/2011, and is not for resale.
User Notes: (2033806930)

unless enumerated in this Agreement. They should be listed here only if intended to be part of the Contract Documents.)

ARTICLE 10 INSURANCE AND BONDS

The Contractor shall purchase and maintain insurance and provide bonds as set forth in Article 11 of AIA Document A201–2007.

(State bonding requirements, if any, and limits of liability for insurance required in Article 11 of AIA Document A201–2007.)

Type of insurance or bond	Limit of liability or bond amount ($0.00)

This Agreement entered into as of the day and year first written above.

OWNER *(Signature)*	**CONTRACTOR** *(Signature)*
(Printed name and title)	*(Printed name and title)*

SAMPLE

AIA Document A101™ – 2007. Copyright © 1915, 1918, 1925, 1937, 1951, 1958, 1961, 1963, 1967, 1974, 1977, 1987, 1991, 1997 and 2007 by The American Institute of Architects. **All rights reserved.** WARNING: This AIA® Document is protected by U.S. Copyright Law and International Treaties. Unauthorized reproduction or distribution of this AIA® Document, or any portion of it, may result in severe civil and criminal penalties, and will be prosecuted to the maximum extent possible under the law. This document was produced by AIA software at 11:29:24 on 07/22/2010 under Order No.1410090278_1 which expires on 01/22/2011, and is not for resale.
User Notes: (2033806930)

Amendment to Contract for Construction
Between
Delaware Technical and Community College
And

_____

The parties hereby agree and reaffirm that the AIA Document A101 – 2007 "Standard Form of Agreement between Owner and Contractor" between Delaware Technical and Community College ("Owner") and_____, a _____ corporation ("Contractor"), dated _____ ___, 201_, shall govern this transaction as supplemented and amended herein ("Contract Documents"). At times Owner and Contractor shall be collectively referred to the "Parties".

The parties expressly agree to enter into this amendment ("Amendment") which shall govern in the event of a conflict between the terms of the Contract Documents or any document referenced or incorporated therein, and that any contrary provision of any such document shall be superseded hereby. The parties agree to this Amendment as follows:

1. Contractor represents and warrants that it has not employed or retained any company or person, other than a bona fide employee working primarily for the firm offering professional services, to solicit or secure this agreement, and that he has not been paid or agreed to pay any person, company, corporation, individual, or firm, other than a bona fide employee working primarily for the firm offering professional services, any fee, commission, percentage, gift, or any other consideration, contingent upon or resulting from the award or making of this agreement;

2. All provisions of the Bid Package and Project manual are incorporated herein by reference as though fully set forth. In the event of a conflict between any provision of the Bid Package or Project Manual and the bid or proposal submitted by Contractor, the Bid Package and Project Manual shall control.

3. §3.3 is amended to require substantial completion of all construction not later than _____ days from the commencement of construction. Time is of the essence. If the Contractor fails to complete the work within the time specified, the Contractor shall pay liquidated damages to the Owner in the amount of $ _____ for each calendar day of delay until the work is completed or accepted. If the Owner terminates the Contractor's right to proceed, liquidated damages will continue to accrue until the work is completed. These liquidated damages are in addition to all sums and remedies available to Owner upon termination for cause.

4. In the event the attached contract or aggregate of contracts is in excess of $500,000 for new construction (including painting and decorating) or $45,000 for alteration, repair, renovation, rehabilitation, demolition or reconstruction (including painting and

decorating of buildings or works) and requires or involves the employment of mechanics and/or laborers, then the minimum wages to be paid to the various classes of laborers and mechanics shall be based upon greater of the Davis-Bacon Wage Rates (if the project is federally funded) or the wages that will be determined by the Delaware Department of Labor, Division of Industrial Affairs, to be prevailing in the county in which the work is to be performed.

5. Contractor shall pay all mechanics and laborers employed directly upon the site of the work, unconditionally and not less often than once a week and without subsequent deduction or rebate on any account, the full amounts accrued at time of payment, computed at wage rates not less than the prevailing wages, regardless of any contractual relationship which may be alleged to exist between the employer and such laborers and mechanics, and shall provide sworn payroll information, as required by the Department of Labor, on a weekly basis.

6. All changes to the scope of construction shall be authorized in writing by Owner in advance. Owner shall not be liable for payment of any change order that has not received prior written authorization. The cost of any change order shall be set forth therein. If no such provision is set forth in the change order, then the cost to the Owner shall be the Contractor's costs for wages, labor costs other than wages, wage taxes, materiel, equipment rentals, insurance and subcontracts attributable to the additional activity plus a reasonable sum for overhead and profit not to exceed 5%;

7. Preference in employment of laborers, workers or mechanics shall be given to bona fide legal citizens of the State who have established citizenship by residence of at least 90 days in the State. Contractor shall pay a penalty to the Secretary of Finance equal to the amount of compensation paid to any person in violation of this section;

8. Contractor shall not substitute another subcontractor for any subcontractor whose name was set forth in the statement which accompanied the bid without the written consent of Owner. Contractor shall pay a penalty equal to 150% of the amount of the proposal or subcontract submitted by the subcontractor identified in the accompanying statement for violating this paragraph.

9. Payments are due 30 days after receipt of a valid Application for Payment. Payments due and unpaid after 30 days shall bear simple interest at the rate of 1 percent per month not greater than 12% annual percentage rate;

10. Final payment shall not be due until all non-conforming work has been corrected and all other provisions of the agreement have been met, including, but not limited to, all reporting requirements. Furthermore, a written release of mechanics' liens signed by all persons who would otherwise be entitled to avail themselves of the provisions of Chapter 27 of Tile 25 of the Delaware Code, containing a notarized, verified certification signed by the Contractor that all of the persons signing the release constitute all of the persons who have furnished materials and performed labor in and for the construction, erection, building, improvement, alteration and repair to the date of the release and who would be

entitled otherwise to file mechanics' liens claims shall be provided simultaneously with the receipt of final payment;

11. Owner may terminate this agreement or suspend work hereunder for any reason authorized by applicable Delaware law;

12. §6.2 is hereby deleted. The parties reserve all remedies available at law or equity for any dispute not resolved in accordance with §6.1;

13. § 10 is hereby deleted. Simultaneous with the execution of the this contract, Contractor shall also execute a good and sufficient bond for the benefit of Owner, with corporate surety authorized to do business in this State, in a sum equal to 100% of the contract price and the bond form used shall be the standard form issued by the Office of Management and Budget. The bond shall be conditioned upon the faithful compliance and performance by the successful bidder of each and every term and condition of the contract and the proposal and plans and specifications thereof, at the time and in the manner prescribed by the contract and the plans and specifications, including the payment in full, to every firm furnishing materiel or performing labor in the performance of the contract, of all sums of money due it for such labor or materiel. The bond shall also contain the Contractor's guarantee to indemnify and save harmless the Owner from all costs, damages and expenses growing out of or by reason of Contractor's failure to comply and perform the work and complete the contract in accordance with its terms. No firm or surety, in any action brought under 29 Del C §6962, or any successor law, or on the bond required by such statute, shall assert as a defense to such action the claim that the bond given contained a limitation or restriction not provided for by Chapter 69, Title 29 of the Delaware Code, the provisions of which are incorporated herein by reference as though fully set forth;

14. Owner shall have the right to terminate the contract upon receipt of notice from Contractor's surety that bond claims have been made or are anticipated to be made against Contractor on this or any other project of Contractor. If Owner elects to terminate the contract pursuant to this paragraph, it shall be deemed a termination for cause.

15. Owner may, when it considers that its interests so require, cause judgment to be confessed upon the bond. All sums received through confession of judgment shall be paid for the credit of the Owner to the Secretary of Finance;

16. Owner or any of its duly authorized representatives shall have access to any documents, books, papers, and records of Contractor (which are directly pertinent to a specific grant program) for the purpose of making an audit, examination, excerpts, and transcriptions. Contractor shall maintain all required records for at least three years after Owner makes final payment and all pending matters are closed;

17. Contractor shall submit a report to Owner not less frequently than monthly covering the general progress of the job and describing any problems or factors contributing to delay;

18. During the performance of this contract, the contractor agrees as follows:

The contractor will not discriminate against any employee or applicant for employment because of race, creed, color, sex, sexual orientation gender identity, pregnancy, or national origin. The contractor will take positive steps to ensure that applicants are employed and that employees are treated during employment without regard to their race, creed, color, sex, sexual orientation, gender identity, pregnancy, or national origin. Such action shall include, but not be limited to, the following: employment, upgrading, demotion or transfer; recruitment or recruitment advertising; layoff or termination; rates of pay or other forms of compensation; and selection for training, including apprenticeship. The contractor agrees to post in conspicuous places available to employees and applicants for employment notices to be provided by the contracting agency setting forth this nondiscrimination clause.

The contractor will, in all solicitations or advertisements for employees placed by or on behalf of the contractor, state that all qualified applicants will receive consideration for employment without regard to race, creed, color, sex, sexual orientation or national origin.

19. The parties agree that this agreement shall be governed by and construed pursuant to the laws of The State of Delaware, and that the Delaware courts shall have sole and exclusive jurisdiction of any dispute arising under this agreement.

IN WITNESS WHEREOF, the parties, through their acknowledged and duly authorized agents set forth below, have set their hand and seal on this indenture on this _____ day of _____, 201__.

Delaware Technical and Community College

_____(Seal)
Mark T. Brainard, President

(Contractor)

_____(Seal)
By:

SECTION 005600: CONTRACTOR'S QUALIFICATION STATEMENTS

PART 1 GENERAL

1.1 DESCRIPTION

A. Copy of Contractor's Qualification Statement AIA Document A305 - 1986 edition is bound herein.

B. This Document shall be completed and submitted only if requested in writing by the Owner and/or Engineer.

PART 2 PRODUCTS

NOT USED

PART 3 EXECUTION

NOT USED

END OF SECTION

AIA Document A305 - Electronic Format

Contractor's Qualification Statement

1986 EDITION

THIS DOCUMENT HAS IMPORTANT LEGAL CONSEQUENCES: CONSULTATION WITH AN ATTORNEY IS ENCOURAGED WITH RESPECT TO ITS COMPLETION OR MODIFICATION. AUTHENTICATION OF THIS ELECTRONICALLY DRAFTED AIA DOCUMENT MAY BE MADE BY USING AIA DOCUMENT D401.

This form is approved and recommended by The American Institute of Architects (AIA) and The Associated General Contractors of American (AGC) for use in evaluating the qualifications of contractors. No endorsement of the submitting party or verification of the information is made by AIA or AGC.

Copyright 1964, 1969, 1979, © 1986 by The American Institute of Architects, 1735 New York Avenue N.W, Washington D.C. 20006-5292. Reproduction of the material herein or substantial quotation of its provisions without written permission of the AIA violates the copyright laws of the United States and will be subject to legal prosecution.

The Undersigned certifies under oath that the information provided herein is true and sufficiently complete so as not to be misleading.

SUBMITTED TO:

ADDRESS:

SUBMITTED BY:

NAME:

ADDRESS:

PRINCIPAL OFFICE:

Corporation ☐

Partnership ☐

Individual ☐

Joint Venture ☐

Other ☐

NAME OF PROJECT (if applicable):

TYPE OF WORK (file separate form for each Classification of Work):

_____ General Construction

_____ HVAC

_____ Plumbing

_____ Electrical

_____ Other (please specify)

1. ORGANIZATION

1.1 How many years has your organization been in business as a Contractor?

1.2 How many years has your organization been in business under its present business name?

1.2.1 Under what other or former names has your organization operated?

1.3 If your organization is a corporation, answer the following:

1.3.1 Date of incorporation:

© 1986 THE AMERICAN INSTITUTE OF ARCHITECTS, 1735 NEW YORK AVENUE, N.W., WASHINGTON, D.C. 20006-5292. AIA DOCUMENT A305 - CONTRACTOR'S QUALIFICATION STATEMENT - 1986 EDITION - AIA® - WARNING: Unlicensed photocopying violates U.S. copyright laws and is subject to legal prosecution. This document was electronically produced with permission of the AIA and can be reproduced in accordance with your license without violation until the date of expiration as noted below.

This document is not an original AIA® Contract Document, but a reproduction produced by AIA® Contract Documents software for administrative purposes only and is not for other use or resale.

1.3.2 State of incorporation:
1.3.3 President's name:
1.3.4 Vice-president's name(s)

1.3.5 Secretary's name:
1.3.6 Treasurer's name:

1.4 If your organization is a partnership, answer the following:
1.4.1 Date of organization:
1.4.2 Type of partnership (if applicable):
1.4.3 Name(s) of general partner(s)

1.5 If your organization is individually owned, answer the following:
1.5.1 Date of organization:
1.5.2 Name of owner:

1.6 If the form of your organization is other than those listed above, describe it and name the principals:

2. LICENSING

2.1 List jurisdictions and trade categories in which your organization is legally qualified to do business, and indicate registration or license numbers, if applicable.

2.2 List jurisdictions in which your organization's partnership or trade name is filed.

3. EXPERIENCE

3.1 List the categories of work that your organization normally performs with its own forces.

3.2 Claims and Suits. (If the answer to any of the questions below is yes, please attach details.)

3.2.1 Has your organization ever failed to complete any work awarded to it?

3.2.2 Are there any judgments, claims, arbitration proceedings or suits pending or outstanding against your organization or its officers?

3.2.3 Has your organization filed any law suits or requested arbitration with regard to construction contracts within the last five years?

3.3 Within the last five years, has any officer or principal of your organization ever been an officer or principal of another organization when it failed to complete a construction contract? (If the answer is yes, please attach details.)

3.4 On a separate sheet, list major construction projects your organization has in progress, giving the name of project, owner, architect, contract amount, percent complete and scheduled completion date.

3.4.1 State total worth of work in progress and under contract:

© 1986 THE AMERICAN INSTITUTE OF ARCHITECTS, 1735 NEW YORK AVENUE, N.W., WASHINGTON, D.C. 20006-5292. AIA DOCUMENT A305 - CONTRACTOR'S QUALIFICATION STATEMENT - 1986 EDITION - AIA® - WARNING: Unlicensed photocopying violates U.S. copyright laws and is subject to legal prosecution. This document was electronically produced with permission of the AIA and can be reproduced in accordance with your license without violation until the date of expiration as noted below.
T document is not an original AIA® Contract Document, but a reproduction produced by AIA® Contract Documents software for a. istrative purposes only and is not for other use or resale.

3.5 On a separate sheet, list the major projects your organization has completed in the past five years, giving the name of project, owner, architect, contract amount, date of completion and percentage of the cost of the work performed with your own forces.

3.5.1 State average annual amount of construction work performed during the past five years:

3.6 On a separate sheet, list the construction experience and present commitments of the key individuals of your organization.

4. REFERENCES

4.1 Trade References:

4.2 Bank References:

4.3 Surety:

4.3.1 Name of bonding company:

4.3.2 Name and address of agent:

5. FINANCING

5.1 Financial Statement.

5.1.1 Attach a financial statement, preferably audited, including your organization's latest balance sheet and income statement showing the following items:

Current Assets (e.g., cash, joint venture accounts, accounts receivable, notes receivable, accrued income, deposits, materials inventory and prepaid expenses);

Net Fixed Assets;

Other Assets;

Current Liabilities (e.g., accounts payable, notes payable, accrued expenses, provision for income taxes, advances, accrued salaries and accrued payroll taxes);

Other Liabilities (e.g., capital, capital stock, authorized and outstanding shares par values, earned surplus and retained earnings).

5.1.2 Name and address of firm preparing attached financial statement, and date thereof:

5.1.3 Is the attached financial statement for the identical organization named on page one?

5.1.4 If not, explain the relationship and financial responsibility of the organization whose financial statement is provided (e.g., parent-subsidiary).

© 1986 THE AMERICAN INSTITUTE OF ARCHITECTS, 1735 NEW YORK AVENUE, N.W., WASHINGTON, D.C. 20006-5292. AIA DOCUMENT A305 - CONTRACTOR'S QUALIFICATION STATEMENT - 1986 EDITION - AIA® - WARNING: Unlicensed photocopying violates U.S. copyright laws and is subject to legal prosecution. This document was electronically produced with permission of the AIA and can be reproduced in accordance with your license without violation until the date of expiration as noted below.
T document is not an original AIA® Contract Document, but a reproduction produced by AIA® Contract Documents software for a istrative purposes only and is not for other use or resale.

5.2 Will the organization whose financial statement is attached act as guarantor of the contract for construction?

SIGNATURE

6.1 Dated at this day of .

Name of Organization:

By:

Title:

6.2

M being duly sworn deposes and says that the information provided herein is true and sufficiently complete so as not to be misleading.

Subscribed and sworn before me this day of 20

Notary Public:

My Commission Expires:

© 1986 THE AMERICAN INSTITUTE OF ARCHITECTS, 1735 NEW YORK AVENUE, N.W., WASHINGTON, D.C. 20006-5292. AIA DOCUMENT A305 - CONTRACTOR'S QUALIFICATION STATEMENT - 1986 EDITION - AIA® - WARNING: Unlicensed photocopying violates U.S. copyright laws and is subject to legal prosecution. This document was electronically produced with permission of the AIA and can be reproduced in accordance with your license without violation until the date of expiration as noted below.

Tl locument is not an original AIA® Contract Document, but a reproduction produced by AIA® Contract Documents software for al strative purposes only and is not for other use or resale.

SECTION 007000: GENERAL CONDITIONS OF THE CONTRACT FOR CONSTRUCTION

PART 1 GENERAL

1.1 DESCRIPTION

A. The General Conditions of this contract are the "General Conditions of the Contract for Construction", AIA Document A201, 2007 Edition, as modified.

B. A copy of AIA Document A201-2007 edition as modified by the Supplementary General Conditions is bound herein.

C. The General Conditions of the contract, as modified apply with equal force to General Contractor, all subcontractors, suppliers and tradesmen for the performance of work, extra work, and/or services under this contract and apply to each section in the specifications.

D. Refer to Section 008000 for Supplementary General Conditions.

END OF SECTION

AIA® Document A201™ – 2007

General Conditions of the Contract for Construction

for the following PROJECT:
(Name and location or address)

THE OWNER:
(Name and address)

THE ARCHITECT:
(Name and address)

ADDITIONS AND DELETIONS:
The author of this document has added information needed for its completion. The author may also have revised the text of the original AIA standard form. An *Additions and Deletions Report* that notes added information as well as revisions to the standard form text is available from the author and should be reviewed. A vertical line in the left margin of this document indicates where the author has added necessary information and where the author has added to or deleted from the original AIA text.

This document has important legal consequences. Consultation with an attorney is encouraged with respect to its completion or modification.

TABLE OF ARTICLES

1 GENERAL PROVISIONS

2 OWNER

3 CONTRACTOR

4 ARCHITECT

5 SUBCONTRACTORS

6 CONSTRUCTION BY OWNER OR BY SEPARATE CONTRACTORS

7 CHANGES IN THE WORK

8 TIME

9 PAYMENTS AND COMPLETION

10 PROTECTION OF PERSONS AND PROPERTY

11 INSURANCE AND BONDS

12 UNCOVERING AND CORRECTION OF WORK

13 MISCELLANEOUS PROVISIONS

14 TERMINATION OR SUSPENSION OF THE CONTRACT

15 CLAIMS AND DISPUTES

Init. /

AIA Document A201™ – 2007. Copyright © 1911, 1915, 1918, 1925, 1937, 1951, 1958, 1961, 1963, 1966, 1970, 1976, 1987, 1997 and 2007 by The American Institute of Architects. **All rights reserved.** WARNING: This AIA® Document is protected by U.S. Copyright Law and International Treaties. Unauthorized reproduction or distribution of this AIA® Document, or any portion of it, may result in severe civil and criminal penalties, and will be prosecuted to the maximum extent possible under the law. This document was produced by AIA software at 11:33:29 on 07/22/2010 under Order No.1410090278_1 which expires on 01/22/2011, and is not for resale.
User Notes:

INDEX
(Numbers and Topics in Bold are Section Headings)

Acceptance of Nonconforming Work
9.6.6, 9.9.3, **12.3**
Acceptance of Work
9.6.6, 9.8.2, 9.9.3, 9.10.1, 9.10.3, 12.3
Access to Work
3.16, 6.2.1, 12.1
Accident Prevention
10
Acts and Omissions
3.2, 3.3.2, 3.12.8, 3.18, 4.2.3, 8.3.1, 9.5.1, 10.2.5, 10.2.8, 13.4.2, 13.7.1, 14.1, 15.2
Addenda
1.1.1, 3.11.1
Additional Costs, Claims for
3.7.4, 3.7.5, 6.1.1, 7.3.7.5, 10.3, 15.1.4
Additional Inspections and Testing
9.4.2, 9.8.3, 12.2.1, **13.5**
Additional Insured
11.1.4
Additional Time, Claims for
3.2.4, 3.7.4, 3.7.5, 3.10.2, 8.3.2, **15.1.5**
Administration of the Contract
3.1.3, **4.2**, 9.4, 9.5
Advertisement or Invitation to Bid
1.1.1
Aesthetic Effect
4.2.13
Allowances
3.8, 7.3.8
All-risk Insurance
11.3.1, 11.3.1.1
Applications for Payment
4.2.5, 7.3.9, 9.2, **9.3**, 9.4, 9.5.1, 9.6.3, 9.7.1, 9.10, 11.1.3
Approvals
2.1.1, 2.2.2, 2.4, 3.1.3, 3.10.2, 3.12.8, 3.12.9, 3.12.10, 4.2.7, 9.3.2, 13.5.1
Arbitration
8.3.1, 11.3.10, 13.1.1, 15.3.2, **15.4**
ARCHITECT
4
Architect, Definition of
4.1.1
Architect, Extent of Authority
2.4.1, 3.12.7, 4.1, 4.2, 5.2, 6.3.1, 7.1.2, 7.3.7, 7.4, 9.2.1, 9.3.1, 9.4, 9.5, 9.6.3, 9.8, 9.10.1, 9.10.3, 12.1, 12.2.1, 13.5.1, 13.5.2, 14.2.2, 14.2.4, 15.1.3, 15.2.1
Architect, Limitations of Authority and Responsibility
2.1.1, 3.12.4, 3.12.8, 3.12.10, 4.1.2, 4.2.1, 4.2.2, 4.2.3, 4.2.6, 4.2.7, 4.2.10, 4.2.12, 4.2.13, 5.2.1, 7.4.1, 9.4.2, 9.5.3, 9.6.4, 15.1.3, 15.2
Architect's Additional Services and Expenses
2.4.1, 11.3.1.1, 12.2.1, 13.5.2, 13.5.3, 14.2.4
Architect's Administration of the Contract
3.1.3, 4.2, 3.7.4, 15.2, 9.4.1, 9.5
Architect's Approvals
2.4.1, 3.1.3, 3.5.1, 3.10.2, 4.2.7
Architect's Authority to Reject Work
3.5.1, 4.2.6, 12.1.2, 12.2.1
Architect's Copyright
1.1.7, 1.5
Architect's Decisions
3.7.4, 4.2.6, 4.2.7, 4.2.11, 4.2.12, 4.2.13, 4.2.14, 6.3.1, 7.3.7, 7.3.9, 8.1.3, 8.3.1, 9.2.1, 9.4.1, 9.5, 9.8.4, 9.9.1, 13.5.2, 15.2, 15.3
Architect's Inspections
3.7.4, 4.2.2, 4.2.9, 9.4.2, 9.8.3, 9.9.2, 9.10.1, 13.5
Architect's Instructions
3.2.4, 3.3.1, 4.2.6, 4.2.7, 13.5.2
Architect's Interpretations
4.2.11, 4.2.12
Architect's Project Representative
4.2.10
Architect's Relationship with Contractor
1.1.2, 1.5, 3.1.3, 3.2.2, 3.2.3, 3.2.4, 3.3.1, 3.4.2, 3.5.1, 3.7.4, 3.7.5, 3.9.2, 3.9.3, 3.10, 3.11, 3.12, 3.16, 3.18, 4.1.2, 4.1.3, 4.2, 5.2, 6.2.2, 7, 8.3.1, 9.2, 9.3, 9.4, 9.5, 9.7, 9.8, 9.9, 10.2.6, 10.3, 11.3.7, 12, 13.4.2, 13.5, 15.2

Architect's Relationship with Subcontractors
1.1.2, 4.2.3, 4.2.4, 4.2.6, 9.6.3, 9.6.4, 11.3.7
Architect's Representations
9.4.2, 9.5.1, 9.10.1
Architect's Site Visits
3.7.4, 4.2.2, 4.2.9, 9.4.2, 9.5.1, 9.9.2, 9.10.1, 13.5
Asbestos
10.3.1
Attorneys' Fees
3.18.1, 9.10.2, 10.3.3
Award of Separate Contracts
6.1.1, 6.1.2
Award of Subcontracts and Other Contracts for Portions of the Work
5.2
Basic Definitions
1.1
Bidding Requirements
1.1.1, 5.2.1, 11.4.1
Binding Dispute Resolution
9.7.1, 11.3.9, 11.3.10, 13.1.1, 15.2.5, 15.2.6.1, 15.3.1, 15.3.2, 15.4.1
Boiler and Machinery Insurance
11.3.2
Bonds, Lien
7.3.7.4, 9.10.2, 9.10.3
Bonds, Performance, and Payment
7.3.7.4, 9.6.7, 9.10.3, 11.3.9, **11.4**

Init.
/
AIA Document A201™ – 2007. Copyright © 1911, 1915, 1918, 1925, 1937, 1951, 1958, 1961, 1963, 1966, 1970, 1976, 1987, 1997 and 2007 by The American Institute of Architects. **All rights reserved.** WARNING: This AIA® Document is protected by U.S. Copyright Law and International Treaties. Unauthorized reproduction or distribution of this AIA® Document, or any portion of it, may result in severe civil and criminal penalties, and will be prosecuted to the maximum extent possible under the law. This document was produced by AIA software at 11:33:29 on 07/22/2010 under Order No.1410090278_1 which expires on 01/22/2011, and is not for resale.
User Notes:

Building Permit
3.7.1
Capitalization
1.3
Certificate of Substantial Completion
9.8.3, 9.8.4, 9.8.5
Certificates for Payment
4.2.1, 4.2.5, 4.2.9, 9.3.3, **9.4**, 9.5, 9.6.1, 9.6.6, 9.7.1, 9.10.1, 9.10.3, 14.1.1.3, 14.2.4, 15.1.3
Certificates of Inspection, Testing or Approval
13.5.4
Certificates of Insurance
9.10.2, 11.1.3
Change Orders
1.1.1, 2.4.1, 3.4.2, 3.7.4, 3.8.2.3, 3.11.1, 3.12.8, 4.2.8, 5.2.3, 7.1.2, 7.1.3, **7.2**, 7.3.2, 7.3.6, 7.3.9, 7.3.10, 8.3.1, 9.3.1.1, 9.10.3, 10.3.2, 11.3.1.2, 11.3.4, 11.3.9, 12.1.2, 15.1.3
Change Orders, Definition of
7.2.1
CHANGES IN THE WORK
2.2.1, 3.11, 4.2.8, **7**, 7.2.1, 7.3.1, 7.4, 7.4.1, 8.3.1, 9.3.1.1, 11.3.9
Claims, Definition of
15.1.1
CLAIMS AND DISPUTES
3.2.4, 6.1.1, 6.3.1, 7.3.9, 9.3.3, 9.10.4, 10.3.3, **15**, 15.4

Claims and Timely Assertion of Claims
15.4.1
Claims for Additional Cost
3.2.4, 3.7.4, 6.1.1, 7.3.9, 10.3.2, **15.1.4**
Claims for Additional Time
3.2.4, 3.7.46.1.1, 8.3.2, 10.3.2, **15.1.5**
Concealed or Unknown Conditions, Claims for
3.7.4
Claims for Damages
3.2.4, 3.18, 6.1.1, 8.3.3, 9.5.1, 9.6.7, 10.3.3, 11.1.1, 11.3.5, 11.3.7, 14.1.3, 14.2.4, 15.1.6
Claims Subject to Arbitration
15.3.1, 15.4.1
Cleaning Up
3.15, 6.3
Commencement of the Work, Conditions Relating to
2.2.1, 3.2.2, 3.4.1, 3.7.1, 3.10.1, 3.12.6, 5.2.1, 5.2.3, 6.2.2, 8.1.2, 8.2.2, 8.3.1, 11.1, 11.3.1, 11.3.6, 11.4.1, 15.1.4
Commencement of the Work, Definition of
8.1.2
Communications Facilitating Contract Administration
3.9.1, **4.2.4**
Completion, Conditions Relating to
3.4.1, 3.11, 3.15, 4.2.2, 4.2.9, 8.2, 9.4.2, 9.8, 9.9.1, 9.10, 12.2, 13.7, 14.1.2
COMPLETION, PAYMENTS AND
9
Completion, Substantial
4.2.9, 8.1.1, 8.1.3, 8.2.3, 9.4.2, 9.8, 9.9.1, 9.10.3, 12.2, 13.7
Compliance with Laws
1.6.1, 3.2.3, 3.6, 3.7, 3.12.10, 3.13, 4.1.1, 9.6.4, 10.2.2, 11.1, 11.3, 13.1, 13.4, 13.5.1, 13.5.2, 13.6, 14.1.1, 14.2.1.3, 15.2.8, 15.4.2, 15.4.3
Concealed or Unknown Conditions
3.7.4, 4.2.8, 8.3.1, 10.3
Conditions of the Contract
1.1.1, 6.1.1, 6.1.4
Consent, Written
3.4.2, 3.7.4, 3.12.8, 3.14.2, 4.1.2, 9.3.2, 9.8.5, 9.9.1, 9.10.2, 9.10.3, 11.3.1, 13.2, 13.4.2, 15.4.4.2
Consolidation or Joinder
15.4.4
CONSTRUCTION BY OWNER OR BY SEPARATE CONTRACTORS
1.1.4, **6**
Construction Change Directive, Definition of
7.3.1
Construction Change Directives
1.1.1, 3.4.2, 3.12.8, 4.2.8, 7.1.1, 7.1.2, 7.1.3, **7.3**, 9.3.1.1
Construction Schedules, Contractor's
3.10, 3.12.1, 3.12.2, 6.1.3, 15.1.5.2
Contingent Assignment of Subcontracts
5.4, 14.2.2.2
Continuing Contract Performance
15.1.3
Contract, Definition of
1.1.2
CONTRACT, TERMINATION OR SUSPENSION OF THE
5.4.1.1, 11.3.9, **14**
Contract Administration
3.1.3, 4, 9.4, 9.5
Contract Award and Execution, Conditions Relating to
3.7.1, 3.10, 5.2, 6.1, 11.1.3, 11.3.6, 11.4.1
Contract Documents, The
1.1.1
Contract Documents, Copies Furnished and Use of
1.5.2, 2.2.5, 5.3
Contract Documents, Definition of
1.1.1
Contract Sum
3.7.4, 3.8, 5.2.3, 7.2, 7.3, 7.4, **9.1**, 9.4.2, 9.5.1.4, 9.6.7, 9.7, 10.3.2, 11.3.1, 14.2.4, 14.3.2, 15.1.4, 15.2.5
Contract Sum, Definition of
9.1
Contract Time
3.7.4, 3.7.5, 3.10.2, 5.2.3, 7.2.1.3, 7.3.1, 7.3.5, 7.4, 8.1.1, 8.2.1, 8.3.1, 9.5.1, 9.7.1, 10.3.2, 12.1.1, 14.3.2, 15.1.5.1, 15.2.5
Contract Time, Definition of
8.1.1

AIA Document A201™ – 2007. Copyright © 1911, 1915, 1918, 1925, 1937, 1951, 1958, 1961, 1963, 1966, 1970, 1976, 1987, 1997 and 2007 by The American Institute of Architects. **All rights reserved.** WARNING: This AIA® Document is protected by U.S. Copyright Law and International Treaties. Unauthorized reproduction or distribution of this AIA® Document, or any portion of it, may result in severe civil and criminal penalties, and will be prosecuted to the maximum extent possible under the law. This document was produced by AIA software at 11:33:29 on 07/22/2010 under Order No.1410090278_1 which expires on 01/22/2011, and is not for resale.
User Notes:

CONTRACTOR
3
Contractor, Definition of
3.1, 6.1.2
Contractor's Construction Schedules
3.10, 3.12.1, 3.12.2, 6.1.3, 15.1.5.2
Contractor's Employees
3.3.2, 3.4.3, 3.8.1, 3.9, 3.18.2, 4.2.3, 4.2.6, 10.2, 10.3, 11.1.1, 11.3.7, 14.1, 14.2.1.1,
Contractor's Liability Insurance
11.1
Contractor's Relationship with Separate Contractors and Owner's Forces
3.12.5, 3.14.2, 4.2.4, 6, 11.3.7, 12.1.2, 12.2.4
Contractor's Relationship with Subcontractors
1.2.2, 3.3.2, 3.18.1, 3.18.2, 5, 9.6.2, 9.6.7, 9.10.2, 11.3.1.2, 11.3.7, 11.3.8
Contractor's Relationship with the Architect
1.1.2, 1.5, 3.1.3, 3.2.2, 3.2.3, 3.2.4, 3.3.1, 3.4.2, 3.5.1, 3.7.4, 3.10, 3.11, 3.12, 3.16, 3.18, 4.1.3, 4.2, 5.2, 6.2.2, 7, 8.3.1, 9.2, 9.3, 9.4, 9.5, 9.7, 9.8, 9.9, 10.2.6, 10.3, 11.3.7, 12, 13.5, 15.1.2, 15.2.1
Contractor's Representations
3.2.1, 3.2.2, 3.5.1, 3.12.6, 6.2.2, 8.2.1, 9.3.3, 9.8.2
Contractor's Responsibility for Those Performing the Work
3.3.2, 3.18, 5.3.1, 6.1.3, 6.2, 9.5.1, 10.2.8
Contractor's Review of Contract Documents
3.2
Contractor's Right to Stop the Work
9.7
Contractor's Right to Terminate the Contract
14.1, 15.1.6
Contractor's Submittals
3.10, 3.11, 3.12.4, 4.2.7, 5.2.1, 5.2.3, 9.2, 9.3, 9.8.2, 9.8.3, 9.9.1, 9.10.2, 9.10.3, 11.1.3, 11.4.2
Contractor's Superintendent
3.9, 10.2.6
Contractor's Supervision and Construction Procedures
1.2.2, 3.3, 3.4, 3.12.10, 4.2.2, 4.2.7, 6.1.3, 6.2.4, 7.1.3, 7.3.5, 7.3.7, 8.2, 10, 12, 14, 15.1.3
Contractual Liability Insurance
11.1.1.8, 11.2
Coordination and Correlation
1.2, 3.2.1, 3.3.1, 3.10, 3.12.6, 6.1.3, 6.2.1
Copies Furnished of Drawings and Specifications
1.5, 2.2.5, 3.11
Copyrights
1.5, **3.17**
Correction of Work
2.3, 2.4, 3.7.3, 9.4.2, 9.8.2, 9.8.3, 9.9.1, 12.1.2, **12.2**
Correlation and Intent of the Contract Documents
1.2
Cost, Definition of
7.3.7
Costs
2.4.1, 3.2.4, 3.7.3, 3.8.2, 3.15.2, 5.4.2, 6.1.1, 6.2.3, 7.3.3.3, 7.3.7, 7.3.8, 7.3.9, 9.10.2, 10.3.2, 10.3.6, 11.3, 12.1.2, 12.2.1, 12.2.4, 13.5, 14
Cutting and Patching
3.14, 6.2.5
Damage to Construction of Owner or Separate Contractors
3.14.2, 6.2.4, 10.2.1.2, 10.2.5, 10.4, 11.1.1, 11.3, 12.2.4
Damage to the Work
3.14.2, 9.9.1, 10.2.1.2, 10.2.5, 10.4.1, 11.3.1, 12.2.4
Damages, Claims for
3.2.4, 3.18, 6.1.1, 8.3.3, 9.5.1, 9.6.7, 10.3.3, 11.1.1, 11.3.5, 11.3.7, 14.1.3, 14.2.4, 15.1.6
Damages for Delay
6.1.1, 8.3.3, 9.5.1.6, 9.7, 10.3.2
Date of Commencement of the Work, Definition of
8.1.2
Date of Substantial Completion, Definition of
8.1.3
Day, Definition of
8.1.4
Decisions of the Architect
3.7.4, 4.2.6, 4.2.7, 4.2.11, 4.2.12, 4.2.13, 15.2, 6.3, 7.3.7, 7.3.9, 8.1.3, 8.3.1, 9.2.1, 9.4, 9.5.1, 9.8.4, 9.9.1, 13.5.2, 14.2.2, 14.2.4, 15.1, 15.2
Decisions to Withhold Certification
9.4.1, **9.5**, 9.7, 14.1.1.3
Defective or Nonconforming Work, Acceptance, Rejection and Correction of
2.3.1, 2.4.1, 3.5.1, 4.2.6, 6.2.5, 9.5.1, 9.5.2, 9.6.6, 9.8.2, 9.9.3, 9.10.4, 12.2.1
Defective Work, Definition of
3.5.1
Definitions
1.1, 2.1.1, 3.1.1, 3.5.1, 3.12.1, 3.12.2, 3.12.3, 4.1.1, 15.1.1, 5.1, 6.1.2, 7.2.1, 7.3.1, 8.1, 9.1, 9.8.1
Delays and Extensions of Time
3.2., 3.7.4, 5.2.3, 7.2.1, 7.3.1, 7.4.1, **8.3**, 9.5.1, 9.7.1, 10.3.2, 10.4.1, 14.3.2, 15.1.5, 15.2.5
Disputes
6.3.1, 7.3.9, 15.1, 15.2
Documents and Samples at the Site
3.11
Drawings, Definition of
1.1.5
Drawings and Specifications, Use and Ownership of
3.11
Effective Date of Insurance
8.2.2, 11.1.2
Emergencies
10.4, 14.1.1.2, 15.1.4
Employees, Contractor's
3.3.2, 3.4.3, 3.8.1, 3.9, 3.18.2, 4.2.3, 4.2.6, 10.2, 10.3.3, 11.1.1, 11.3.7, 14.1, 14.2.1.1

AIA Document A201™ – 2007. Copyright © 1911, 1915, 1918, 1925, 1937, 1951, 1958, 1961, 1963, 1966, 1970, 1976, 1987, 1997 and 2007 by The American Institute of Architects. **All rights reserved.** WARNING: This AIA® Document is protected by U.S. Copyright Law and International Treaties. Unauthorized reproduction or distribution of this AIA® Document, or any portion of it, may result in severe civil and criminal penalties, and will be prosecuted to the maximum extent possible under the law. This document was produced by AIA software at 11:33:29 on 07/22/2010 under Order No.1410090278_1 which expires on 01/22/2011, and is not for resale.
User Notes:

Equipment, Labor, Materials or
1.1.3, 1.1.6, 3.4, 3.5.1, 3.8.2, 3.8.3, 3.12, 3.13.1, 3.15.1, 4.2.6, 4.2.7, 5.2.1, 6.2.1, 7.3.7, 9.3.2, 9.3.3, 9.5.1.3, 9.10.2, 10.2.1, 10.2.4, 14.2.1.1, 14.2.1.2
Execution and Progress of the Work
1.1.3, 1.2.1, 1.2.2, 2.2.3, 2.2.5, 3.1, 3.3.1, 3.4.1, 3.5.1, 3.7.1, 3.10.1, 3.12, 3.14, 4.2, 6.2.2, 7.1.3, 7.3.5, 8.2, 9.5.1, 9.9.1, 10.2, 10.3, 12.2, 14.2, 14.3.1, 15.1.3
Extensions of Time
3.2.4, 3.7.4, 5.2.3, 7.2.1, 7.3, 7.4.1, 9.5.1, 9.7.1, 10.3.2, 10.4.1, 14.3, 15.1.5, 15.2.5
Failure of Payment
9.5.1.3, **9.7**, 9.10.2, 13.6, 14.1.1.3, 14.2.1.2
Faulty Work
(See Defective or Nonconforming Work)
Final Completion and Final Payment
4.2.1, 4.2.9, 9.8.2, **9.10**, 11.1.2, 11.1.3, 11.3.1, 11.3.5, 12.3.1, 14.2.4, 14.4.3
Financial Arrangements, Owner's
2.2.1, 13.2.2, 14.1.1.4
Fire and Extended Coverage Insurance
11.3.1.1
GENERAL PROVISIONS
1
Governing Law
13.1
Guarantees (See Warranty)
Hazardous Materials
10.2.4, **10.3**
Identification of Subcontractors and Suppliers
5.2.1
Indemnification
3.17.1, **3.18**, 9.10.2, 10.3.3, 10.3.5, 10.3.6, 11.3.1.2, 11.3.7
Information and Services Required of the Owner
2.1.2, **2.2**, 3.2.2, 3.12.4, 3.12.10, 6.1.3, 6.1.4, 6.2.5, 9.6.1, 9.6.4, 9.9.2, 9.10.3, 10.3.3, 11.2, 11.4, 13.5.1, 13.5.2, 14.1.1.4, 14.1.4, 15.1.3
Initial Decision
15.2
Initial Decision Maker, Definition of
1.1.8
Initial Decision Maker, Decisions
14.2.2, 14.2.4, 15.2.1, 15.2.2, 15.2.3, 15.2.4, 15.2.5
Initial Decision Maker, Extent of Authority
14.2.2, 14.2.4, 15.1.3, 15.2.1, 15.2.2, 15.2.3, 15.2.4, 15.2.5
Injury or Damage to Person or Property
10.2.8, 10.4.1
Inspections
3.1.3, 3.3.3, 3.7.1, 4.2.2, 4.2.6, 4.2.9, 9.4.2, 9.8.3, 9.9.2, 9.10.1, 12.2.1, 13.5
Instructions to Bidders
1.1.1
Instructions to the Contractor
3.2.4, 3.3.1, 3.8.1, 5.2.1, 7, 8.2.2, 12, 13.5.2
Instruments of Service, Definition of
1.1.7
Insurance
3.18.1, 6.1.1, 7.3.7, 9.3.2, 9.8.4, 9.9.1, 9.10.2, **11**
Insurance, Boiler and Machinery
11.3.2
Insurance, Contractor's Liability
11.1
Insurance, Effective Date of
8.2.2, 11.1.2
Insurance, Loss of Use
11.3.3
Insurance, Owner's Liability
11.2
Insurance, Property
10.2.5, **11.3**
Insurance, Stored Materials
9.3.2, 11.4.1.4
INSURANCE AND BONDS
11
Insurance Companies, Consent to Partial Occupancy
9.9.1, 11.4.1.5
Insurance Companies, Settlement with
11.4.10
Intent of the Contract Documents
1.2.1, 4.2.7, 4.2.12, 4.2.13, 7.4
Interest
13.6
Interpretation
1.2.3, **1.4**, 4.1.1, 5.1, 6.1.2, 15.1.1
Interpretations, Written
4.2.11, 4.2.12, 15.1.4
Judgment on Final Award
15.4.2
Labor and Materials, Equipment
1.1.3, 1.1.6, **3.4**, 3.5.1, 3.8.2, 3.8.3, 3.12, 3.13, 3.15.1, 4.2.6, 4.2.7, 5.2.1, 6.2.1, 7.3.7, 9.3.2, 9.3.3, 9.5.1.3, 9.10.2, 10.2.1, 10.2.4, 14.2.1.1, 14.2.1.2
Labor Disputes
8.3.1
Laws and Regulations
1.5, 3.2.3, 3.6, 3.7, 3.12.10, 3.13.1, 4.1.1, 9.6.4, 9.9.1, 10.2.2, 11.1.1, 11.3, 13.1.1, 13.4, 13.5.1, 13.5.2, 13.6.1, 14, 15.2.8, 15.4
Liens
2.1.2, 9.3.3, 9.10.2, 9.10.4, 15.2.8
Limitations, Statutes of
12.2.5, 13.7, 15.4.1.1
Limitations of Liability
2.3.1, 3.2.2, 3.5.1, 3.12.10, 3.17.1, 3.18.1, 4.2.6, 4.2.7, 4.2.12, 6.2.2, 9.4.2, 9.6.4, 9.6.7, 10.2.5, 10.3.3, 11.1.2, 11.2, 11.3.7, 12.2.5, 13.4.2
Limitations of Time
2.1.2, 2.2, 2.4, 3.2.2, 3.10, 3.11, 3.12.5, 3.15.1, 4.2.7, 5.2, 5.3.1, 5.4.1, 6.2.4, 7.3, 7.4, 8.2, 9.2.1, 9.3.1, 9.3.3, 9.4.1, 9.5, 9.6, 9.7.1, 9.8, 9.9, 9.10, 11.1.3, 11.3.1.5, 11.3.6, 11.3.10, 12.2, 13.5, 13.7, 14, 15

Init.
/
AIA Document A201™ – 2007. Copyright © 1911, 1915, 1918, 1925, 1937, 1951, 1958, 1961, 1963, 1966, 1970, 1976, 1987, 1997 and 2007 by The American Institute of Architects. All rights reserved. WARNING: This AIA® Document is protected by U.S. Copyright Law and International Treaties. Unauthorized reproduction or distribution of this AIA® Document, or any portion of it, may result in severe civil and criminal penalties, and will be prosecuted to the maximum extent possible under the law. This document was produced by AIA software at 11:33:29 on 07/22/2010 under Order No.1410090278_1 which expires on 01/22/2011, and is not for resale.
User Notes:
(1769226833)

Loss of Use Insurance
11.3.3
Material Suppliers
1.5, 3.12.1, 4.2.4, 4.2.6, 5.2.1, 9.3, 9.4.2, 9.6, 9.10.5
Materials, Hazardous
10.2.4, **10.3**
Materials, Labor, Equipment and
1.1.3, 1.1.6, 1.5.1, 3.4.1, 3.5.1, 3.8.2, 3.8.3, 3.12, 3.13.1, 3.15.1, 4.2.6, 4.2.7, 5.2.1, 6.2.1, 7.3.7, 9.3.2, 9.3.3, 9.5.1.3, 9.10.2, 10.2.1.2, 10.2.4, 14.2.1.1, 14.2.1.2
Means, Methods, Techniques, Sequences and Procedures of Construction
3.3.1, 3.12.10, 4.2.2, 4.2.7, 9.4.2
Mechanic's Lien
2.1.2, 15.2.8
Mediation
8.3.1, 10.3.5, 10.3.6, 15.2.1, 15.2.5, 15.2.6, **15.3**, 15.4.1
Minor Changes in the Work
1.1.1, 3.12.8, 4.2.8, 7.1, **7.4**
MISCELLANEOUS PROVISIONS
13
Modifications, Definition of
1.1.1
Modifications to the Contract
1.1.1, 1.1.2, 3.11, 4.1.2, 4.2.1, 5.2.3, 7, 8.3.1, 9.7.1, 10.3.2, 11.3.1
Mutual Responsibility
6.2
Nonconforming Work, Acceptance of
9.6.6, 9.9.3, **12.3**
Nonconforming Work, Rejection and Correction of
2.3.1, 2.4.1, 3.5.1, 4.2.6, 6.2.4, 9.5.1, 9.8.2, 9.9.3, 9.10.4, 12.2.1
Notice
2.2.1, 2.3.1, 2.4.1, 3.2.4, 3.3.1, 3.7.2, 3.12.9, 5.2.1, 9.7.1, 9.10, 10.2.2, 11.1.3, 11.4.6, 12.2.2.1, 13.3, 13.5.1, 13.5.2, 14.1, 14.2, 15.2.8, 15.4.1
Notice, Written
2.3.1, 2.4.1, 3.3.1, 3.9.2, 3.12.9, 3.12.10, 5.2.1, 9.7.1, 9.10, 10.2.2, 10.3, 11.1.3, 11.3.6, 12.2.2.1, **13.3**, 14, 15.2.8, 15.4.1
Notice of Claims
3.7.4, 4.5, 10.2.8, **15.1.2**, 15.4
Notice of Testing and Inspections
13.5.1, 13.5.2
Observations, Contractor's
3.2, 3.7.4
Occupancy
2.2.2, 9.6.6, 9.8, 11.3.1.5
Orders, Written
1.1.1, 2.3, 3.9.2, 7, 8.2.2, 11.3.9, 12.1, 12.2.2.1, 13.5.2, 14.3.1
OWNER
2
Owner, Definition of
2.1.1
Owner, Information and Services Required of the
2.1.2, **2.2**, 3.2.2, 3.12.10, 6.1.3, 6.1.4, 6.2.5, 9.3.2, 9.6.1, 9.6.4, 9.9.2, 9.10.3, 10.3.3, 11.2, 11.3, 13.5.1, 13.5.2, 14.1.1.4, 14.1.4, 15.1.3
Owner's Authority
1.5, 2.1.1, 2.3.1, 2.4.1, 3.4.2, 3.8.1, 3.12.10, 3.14.2, 4.1.2, 4.1.3, 4.2.4, 4.2.9, 5.2.1, 5.2.4, 5.4.1, 6.1, 6.3.1, 7.2.1, 7.3.1, 8.2.2, 8.3.1, 9.3.1, 9.3.2, 9.5.1, 9.6.4, 9.9.1, 9.10.2, 10.3.2, 11.1.3, 11.3.3, 11.3.10, 12.2.2, 12.3.1, 13.2.2, 14.3, 14.4, 15.2.7
Owner's Financial Capability
2.2.1, 13.2.2, 14.1.1.4
Owner's Liability Insurance
11.2
Owner's Loss of Use Insurance
11.3.3
Owner's Relationship with Subcontractors
1.1.2, 5.2, 5.3, 5.4, 9.6.4, 9.10.2, 14.2.2
Owner's Right to Carry Out the Work
2.4, 14.2.2
Owner's Right to Clean Up
6.3
Owner's Right to Perform Construction and to Award Separate Contracts
6.1
Owner's Right to Stop the Work
2.3
Owner's Right to Suspend the Work
14.3
Owner's Right to Terminate the Contract
14.2
Ownership and Use of Drawings, Specifications and Other Instruments of Service
1.1.1, 1.1.6, 1.1.7, **1.5**, 2.2.5, 3.2.2, 3.11.1, 3.17.1, 4.2.12, 5.3.1
Partial Occupancy or Use
9.6.6, **9.9**, 11.3.1.5
Patching, Cutting and
3.14, 6.2.5
Patents
3.17
Payment, Applications for
4.2.5, 7.3.9, 9.2.1, **9.3**, 9.4, 9.5, 9.6.3, 9.7.1, 9.8.5, 9.10.1, 14.2.3, 14.2.4, 14.4.3
Payment, Certificates for
4.2.5, 4.2.9, 9.3.3, **9.4**, 9.5, 9.6.1, 9.6.6, 9.7.1, 9.10.1, 9.10.3, 13.7, 14.1.1.3, 14.2.4
Payment, Failure of
9.5.1.3, **9.7**, 9.10.2, 13.6, 14.1.1.3, 14.2.1.2
Payment, Final
4.2.1, 4.2.9, 9.8.2, 9.10, 11.1.2, 11.1.3, 11.4.1, 11.4.5, 12.3.1, 13.7, 14.2.4, 14.4.3
Payment Bond, Performance Bond and
7.3.7.4, 9.6.7, 9.10.3, 11.4.9, **11.4**

Init.
/
AIA Document A201™ – 2007. Copyright © 1911, 1915, 1918, 1925, 1937, 1951, 1958, 1961, 1963, 1966, 1970, 1976, 1987, 1997 and 2007 by The American Institute of Architects. **All rights reserved.** WARNING: This AIA® Document is protected by U.S. Copyright Law and International Treaties. Unauthorized reproduction or distribution of this AIA® Document, or any portion of it, may result in severe civil and criminal penalties, and will be prosecuted to the maximum extent possible under the law. This document was produced by AIA software at 11:33:29 on 07/22/2010 under Order No.1410090278_1 which expires on 01/22/2011, and is not for resale.
User Notes:

(1769226833)

Payments, Progress
9.3, **9.6**, 9.8.5, 9.10.3, 13.6, 14.2.3, 15.1.3
PAYMENTS AND COMPLETION
9
Payments to Subcontractors
5.4.2, 9.5.1.3, 9.6.2, 9.6.3, 9.6.4, 9.6.7, 11.4.8, 14.2.1.2
PCB
10.3.1
Performance Bond and Payment Bond
7.3.7.4, 9.6.7, 9.10.3, 11.4.9, **11.4**
Permits, Fees, Notices and Compliance with Laws
2.2.2, **3.7**, 3.13, 7.3.7.4, 10.2.2
PERSONS AND PROPERTY, PROTECTION OF
10
Polychlorinated Biphenyl
10.3.1
Product Data, Definition of
3.12.2
Product Data and Samples, Shop Drawings
3.11, **3.12**, 4.2.7
Progress and Completion
4.2.2, **8.2**, 9.8, 9.9.1, 14.1.4, 15.1.3
Progress Payments
9.3, **9.6**, 9.8.5, 9.10.3, 13.6, 14.2.3, 15.1.3
Project, Definition of the
1.1.4
Project Representatives
4.2.10
Property Insurance
10.2.5, **11.3**
PROTECTION OF PERSONS AND PROPERTY
10
Regulations and Laws
1.5, 3.2.3, 3.6, 3.7, 3.12.10, 3.13, 4.1.1, 9.6.4, 9.9.1, 10.2.2, 11.1, 11.4, 13.1, 13.4, 13.5.1, 13.5.2, 13.6, 14, 15.2.8, 15.4
Rejection of Work
3.5.1, 4.2.6, 12.2.1
Releases and Waivers of Liens
9.10.2
Representations
3.2.1, 3.5.1, 3.12.6, 6.2.2, 8.2.1, 9.3.3, 9.4.2, 9.5.1, 9.8.2, 9.10.1
Representatives
2.1.1, 3.1.1, 3.9, 4.1.1, 4.2.1, 4.2.2, 4.2.10, 5.1.1, 5.1.2, 13.2.1
Responsibility for Those Performing the Work
3.3.2, 3.18, 4.2.3, 5.3.1, 6.1.3, 6.2, 6.3, 9.5.1, 10
Retainage
9.3.1, 9.6.2, 9.8.5, 9.9.1, 9.10.2, 9.10.3
Review of Contract Documents and Field Conditions by Contractor
3.2, 3.12.7, 6.1.3
Review of Contractor's Submittals by Owner and Architect
3.10.1, 3.10.2, 3.11, 3.12, 4.2, 5.2, 6.1.3, 9.2, 9.8.2
Review of Shop Drawings, Product Data and Samples by Contractor
3.12
Rights and Remedies
1.1.2, 2.3, 2.4, 3.5.1, 3.7.4, 3.15.2, 4.2.6, 4.5, 5.3, 5.4, 6.1, 6.3, 7.3.1, 8.3, 9.5.1, 9.7, 10.2.5, 10.3, 12.2.2, 12.2.4, **13.4**, 14, 15.4
Royalties, Patents and Copyrights
3.17
Rules and Notices for Arbitration
15.4.1
Safety of Persons and Property
10.2, 10.4
Safety Precautions and Programs
3.3.1, 4.2.2, 4.2.7, 5.3.1, **10.1**, 10.2, 10.4
Samples, Definition of
3.12.3
Samples, Shop Drawings, Product Data and
3.11, **3.12**, 4.2.7
Samples at the Site, Documents and
3.11
Schedule of Values
9.2, 9.3.1
Schedules, Construction
3.10, 3.12.1, 3.12.2, 6.1.3, 15.1.5.2
Separate Contracts and Contractors
1.1.4, 3.12.5, 3.14.2, 4.2.4, 4.2.7, 6, 8.3.1, 11.4.7, 12.1.2
Shop Drawings, Definition of
3.12.1
Shop Drawings, Product Data and Samples
3.11, **3.12**, 4.2.7
Site, Use of
3.13, 6.1.1, 6.2.1
Site Inspections
3.2.2, 3.3.3, 3.7.1, 3.7.4, 4.2, 9.4.2, 9.10.1, 13.5
Site Visits, Architect's
3.7.4, 4.2.2, 4.2.9, 9.4.2, 9.5.1, 9.9.2, 9.10.1, 13.5
Special Inspections and Testing
4.2.6, 12.2.1, 13.5
Specifications, Definition of the
1.1.6
Specifications, The
1.1.1, **1.1.6**, 1.2.2, 1.5, 3.11, 3.12.10, 3.17, 4.2.14
Statute of Limitations
13.7, 15.4.1.1
Stopping the Work
2.3, 9.7, 10.3, 14.1
Stored Materials
6.2.1, 9.3.2, 10.2.1.2, 10.2.4, 11.4.1.4
Subcontractor, Definition of
5.1.1
SUBCONTRACTORS
5
Subcontractors, Work by
1.2.2, 3.3.2, 3.12.1, 4.2.3, 5.2.3, 5.3, 5.4, 9.3.1.2, 9.6.7

AIA Document A201™ – 2007. Copyright © 1911, 1915, 1918, 1925, 1937, 1951, 1958, 1961, 1963, 1966, 1970, 1976, 1987, 1997 and 2007 by The American Institute of Architects. **All rights reserved.** WARNING: This AIA® Document is protected by U.S. Copyright Law and International Treaties. Unauthorized reproduction or distribution of this AIA® Document, or any portion of it, may result in severe civil and criminal penalties, and will be prosecuted to the maximum extent possible under the law. This document was produced by AIA software at 11:33:29 on 07/22/2010 under Order No.1410090278_1 which expires on 01/22/2011, and is not for resale.
User Notes:

Subcontractual Relations
5.3, 5.4, 9.3.1.2, 9.6, 9.10, 10.2.1, 11.4.7, 11.4.8, 14.1, 14.2.1
Submittals
3.10, 3.11, 3.12, 4.2.7, 5.2.1, 5.2.3, 7.3.7, 9.2, 9.3, 9.8, 9.9.1, 9.10.2, 9.10.3, 11.1.3
Submittal Schedule
3.10.2, 3.12.5, 4.2.7
Subrogation, Waivers of
6.1.1, 11.4.5, **11.3.7**
Substantial Completion
4.2.9, 8.1.1, 8.1.3, 8.2.3, 9.4.2, **9.8**, 9.9.1, 9.10.3, 12.2, 13.7
Substantial Completion, Definition of
9.8.1
Substitution of Subcontractors
5.2.3, 5.2.4
Substitution of Architect
4.1.3
Substitutions of Materials
3.4.2, 3.5.1, 7.3.8
Sub-subcontractor, Definition of
5.1.2
Subsurface Conditions
3.7.4
Successors and Assigns
13.2
Superintendent
3.9, 10.2.6
Supervision and Construction Procedures
1.2.2, **3.3**, 3.4, 3.12.10, 4.2.2, 4.2.7, 6.1.3, 6.2.4, 7.1.3, 7.3.7, 8.2, 8.3.1, 9.4.2, 10, 12, 14, 15.1.3
Surety
5.4.1.2, 9.8.5, 9.10.2, 9.10.3, 14.2.2, 15.2.7
Surety, Consent of
9.10.2, 9.10.3
Surveys
2.2.3
Suspension by the Owner for Convenience
14.3
Suspension of the Work
5.4.2, 14.3
Suspension or Termination of the Contract
5.4.1.1, 11.4.9, 14
Taxes
3.6, 3.8.2.1, 7.3.7.4
Termination by the Contractor
14.1, 15.1.6
Termination by the Owner for Cause
5.4.1.1, **14.2**, 15.1.6
Termination by the Owner for Convenience
14.4
Termination of the Architect
4.1.3
Termination of the Contractor
14.2.2
TERMINATION OR SUSPENSION OF THE CONTRACT
14
Tests and Inspections
3.1.3, 3.3.3, 4.2.2, 4.2.6, 4.2.9, 9.4.2, 9.8.3, 9.9.2, 9.10.1, 10.3.2, 11.4.1.1, 12.2.1, **13.5**
TIME
8
Time, Delays and Extensions of
3.2.4, 3.7.4, 5.2.3, 7.2.1, 7.3.1, 7.4.1, **8.3**, 9.5.1, 9.7.1, 10.3.2, 10.4.1, 14.3.2, 15.1.5, 15.2.5
Time Limits
2.1.2, 2.2, 2.4, 3.2.2, 3.10, 3.11, 3.12.5, 3.15.1, 4.2, 4.4, 4.5, 5.2, 5.3, 5.4, 6.2.4, 7.3, 7.4, 8.2, 9.2, 9.3.1, 9.3.3, 9.4.1, 9.5, 9.6, 9.7, 9.8, 9.9, 9.10, 11.1.3, 11.4.1.5, 11.4.6, 11.4.10, 12.2, 13.5, 13.7, 14, 15.1.2, 15.4
Time Limits on Claims
3.7.4, 10.2.8, **13.7**, 15.1.2
Title to Work
9.3.2, 9.3.3
Transmission of Data in Digital Form
1.6
UNCOVERING AND CORRECTION OF WORK
12
Uncovering of Work
12.1
Unforeseen Conditions, Concealed or Unknown
3.7.4, 8.3.1, 10.3
Unit Prices
7.3.3.2, 7.3.4
Use of Documents
1.1.1, 1.5, 2.2.5, 3.12.6, 5.3
Use of Site
3.13, 6.1.1, 6.2.1
Values, Schedule of
9.2, 9.3.1
Waiver of Claims by the Architect
13.4.2
Waiver of Claims by the Contractor
9.10.5, 11.4.7, 13.4.2, 15.1.6
Waiver of Claims by the Owner
9.9.3, 9.10.3, 9.10.4, 11.4.3, 11.4.5, 11.4.7, 12.2.2.1, 13.4.2, 14.2.4, 15.1.6
Waiver of Consequential Damages
14.2.4, 15.1.6
Waiver of Liens
9.10.2, 9.10.4
Waivers of Subrogation
6.1.1, 11.4.5, **11.3.7**
Warranty
3.5, 4.2.9, 9.3.3, 9.8.4, 9.9.1, 9.10.4, 12.2.2, 13.7.1
Weather Delays
15.1.5.2
Work, Definition of
1.1.3

AIA Document A201™ – 2007. Copyright © 1911, 1915, 1918, 1925, 1937, 1951, 1958, 1961, 1963, 1966, 1970, 1976, 1987, 1997 and 2007 by The American Institute of Architects. **All rights reserved.** WARNING: This AIA® Document is protected by U.S. Copyright Law and International Treaties. Unauthorized reproduction or distribution of this AIA® Document, or any portion of it, may result in severe civil and criminal penalties, and will be prosecuted to the maximum extent possible under the law. This document was produced by AIA software at 11:33:29 on 07/22/2010 under Order No.1410090278_1 which expires on 01/22/2011, and is not for resale.
User Notes:

Written Consent
1.5.2, 3.4.2, 3.7.4, 3.12.8, 3.14.2, 4.1.2, 9.3.2, 9.8.5, 9.9.1, 9.10.2, 9.10.3, 11.4.1, 13.2, 13.4.2, 15.4.4.2
Written Interpretations
4.2.11, 4.2.12
Written Notice
2.3, 2.4, 3.3.1, 3.9, 3.12.9, 3.12.10, 5.2.1, 8.2.2, 9.7, 9.10, 10.2.2, 10.3, 11.1.3, 11.4.6, 12.2.2, 12.2.4, **13.3**, 14, 15.4.1
Written Orders
1.1.1, 2.3, 3.9, 7, 8.2.2, 11.4.9, 12.1, 12.2, 13.5.2, 14.3.1, 15.1.2

AIA Document A201™ – 2007. Copyright © 1911, 1915, 1918, 1925, 1937, 1951, 1958, 1961, 1963, 1966, 1970, 1976, 1987, 1997 and 2007 by The American Institute of Architects. **All rights reserved.** WARNING: This AIA® Document is protected by U.S. Copyright Law and International Treaties. Unauthorized reproduction or distribution of this AIA® Document, or any portion of it, may result in severe civil and criminal penalties, and will be prosecuted to the maximum extent possible under the law. This document was produced by AIA software at 11:33:29 on 07/22/2010 under Order No.1410090278_1 which expires on 01/22/2011, and is not for resale.
User Notes:

(1769226833)

ARTICLE 1 GENERAL PROVISIONS

§ 1.1 BASIC DEFINITIONS

§ 1.1.1 THE CONTRACT DOCUMENTS

The Contract Documents are enumerated in the Agreement between the Owner and Contractor (hereinafter the Agreement) and consist of the Agreement, Conditions of the Contract (General, Supplementary and other Conditions), Drawings, Specifications, Addenda issued prior to execution of the Contract, other documents listed in the Agreement and Modifications issued after execution of the Contract. A Modification is (1) a written amendment to the Contract signed by both parties, (2) a Change Order, (3) a Construction Change Directive or (4) a written order for a minor change in the Work issued by the Architect. Unless specifically enumerated in the Agreement, the Contract Documents do not include the advertisement or invitation to bid, Instructions to Bidders, sample forms, other information furnished by the Owner in anticipation of receiving bids or proposals, the Contractor's bid or proposal, or portions of Addenda relating to bidding requirements.

§ 1.1.2 THE CONTRACT

The Contract Documents form the Contract for Construction. The Contract represents the entire and integrated agreement between the parties hereto and supersedes prior negotiations, representations or agreements, either written or oral. The Contract may be amended or modified only by a Modification. The Contract Documents shall not be construed to create a contractual relationship of any kind (1) between the Contractor and the Architect or the Architect's consultants, (2) between the Owner and a Subcontractor or a Sub-subcontractor, (3) between the Owner and the Architect or the Architect's consultants or (4) between any persons or entities other than the Owner and the Contractor. The Architect shall, however, be entitled to performance and enforcement of obligations under the Contract intended to facilitate performance of the Architect's duties.

§ 1.1.3 THE WORK

The term "Work" means the construction and services required by the Contract Documents, whether completed or partially completed, and includes all other labor, materials, equipment and services provided or to be provided by the Contractor to fulfill the Contractor's obligations. The Work may constitute the whole or a part of the Project.

§ 1.1.4 THE PROJECT

The Project is the total construction of which the Work performed under the Contract Documents may be the whole or a part and which may include construction by the Owner and by separate contractors.

§ 1.1.5 THE DRAWINGS

The Drawings are the graphic and pictorial portions of the Contract Documents showing the design, location and dimensions of the Work, generally including plans, elevations, sections, details, schedules and diagrams.

§ 1.1.6 THE SPECIFICATIONS

The Specifications are that portion of the Contract Documents consisting of the written requirements for materials, equipment, systems, standards and workmanship for the Work, and performance of related services.

§ 1.1.7 INSTRUMENTS OF SERVICE

Instruments of Service are representations, in any medium of expression now known or later developed, of the tangible and intangible creative work performed by the Architect and the Architect's consultants under their respective professional services agreements. Instruments of Service may include, without limitation, studies, surveys, models, sketches, drawings, specifications, and other similar materials.

§ 1.1.8 INITIAL DECISION MAKER

The Initial Decision Maker is the person identified in the Agreement to render initial decisions on Claims in accordance with Section 15.2 and certify termination of the Agreement under Section 14.2.2.

§ 1.2 CORRELATION AND INTENT OF THE CONTRACT DOCUMENTS

§ 1.2.1 The intent of the Contract Documents is to include all items necessary for the proper execution and completion of the Work by the Contractor. The Contract Documents are complementary, and what is required by one shall be as binding as if required by all; performance by the Contractor shall be required only to the extent consistent with the Contract Documents and reasonably inferable from them as being necessary to produce the indicated results.

Init.
/
AIA Document A201™ – 2007. Copyright © 1911, 1915, 1918, 1925, 1937, 1951, 1958, 1961, 1963, 1966, 1970, 1976, 1987, 1997 and 2007 by The American Institute of Architects. All rights reserved. WARNING: This AIA® Document is protected by U.S. Copyright Law and International Treaties. Unauthorized reproduction or distribution of this AIA® Document, or any portion of it, may result in severe civil and criminal penalties, and will be prosecuted to the maximum extent possible under the law. This document was produced by AIA software at 11:33:29 on 07/22/2010 under Order No.1410090278_1 which expires on 01/22/2011, and is not for resale.
User Notes:
(1769226833)

§ 1.2.2 Organization of the Specifications into divisions, sections and articles, and arrangement of Drawings shall not control the Contractor in dividing the Work among Subcontractors or in establishing the extent of Work to be performed by any trade.

§ 1.2.3 Unless otherwise stated in the Contract Documents, words that have well-known technical or construction industry meanings are used in the Contract Documents in accordance with such recognized meanings.

§ 1.3 CAPITALIZATION

Terms capitalized in these General Conditions include those that are (1) specifically defined, (2) the titles of numbered articles or (3) the titles of other documents published by the American Institute of Architects.

§ 1.4 INTERPRETATION

In the interest of brevity the Contract Documents frequently omit modifying words such as "all" and "any" and articles such as "the" and "an," but the fact that a modifier or an article is absent from one statement and appears in another is not intended to affect the interpretation of either statement.

§ 1.5 OWNERSHIP AND USE OF DRAWINGS, SPECIFICATIONS AND OTHER INSTRUMENTS OF SERVICE

§ 1.5.1 The Architect and the Architect's consultants shall be deemed the authors and owners of their respective Instruments of Service, including the Drawings and Specifications, and will retain all common law, statutory and other reserved rights, including copyrights. The Contractor, Subcontractors, Sub-subcontractors, and material or equipment suppliers shall not own or claim a copyright in the Instruments of Service. Submittal or distribution to meet official regulatory requirements or for other purposes in connection with this Project is not to be construed as publication in derogation of the Architect's or Architect's consultants' reserved rights.

§ 1.5.2 The Contractor, Subcontractors, Sub-subcontractors and material or equipment suppliers are authorized to use and reproduce the Instruments of Service provided to them solely and exclusively for execution of the Work. All copies made under this authorization shall bear the copyright notice, if any, shown on the Instruments of Service. The Contractor, Subcontractors, Sub-subcontractors, and material or equipment suppliers may not use the Instruments of Service on other projects or for additions to this Project outside the scope of the Work without the specific written consent of the Owner, Architect and the Architect's consultants.

§ 1.6 TRANSMISSION OF DATA IN DIGITAL FORM

If the parties intend to transmit Instruments of Service or any other information or documentation in digital form, they shall endeavor to establish necessary protocols governing such transmissions, unless otherwise already provided in the Agreement or the Contract Documents.

ARTICLE 2 OWNER

§ 2.1 GENERAL

§ 2.1.1 The Owner is the person or entity identified as such in the Agreement and is referred to throughout the Contract Documents as if singular in number. The Owner shall designate in writing a representative who shall have express authority to bind the Owner with respect to all matters requiring the Owner's approval or authorization. Except as otherwise provided in Section 4.2.1, the Architect does not have such authority. The term "Owner" means the Owner or the Owner's authorized representative.

§ 2.1.2 The Owner shall furnish to the Contractor within fifteen days after receipt of a written request, information necessary and relevant for the Contractor to evaluate, give notice of or enforce mechanic's lien rights. Such information shall include a correct statement of the record legal title to the property on which the Project is located, usually referred to as the site, and the Owner's interest therein.

§ 2.2 INFORMATION AND SERVICES REQUIRED OF THE OWNER

§ 2.2.1 Prior to commencement of the Work, the Contractor may request in writing that the Owner provide reasonable evidence that the Owner has made financial arrangements to fulfill the Owner's obligations under the Contract. Thereafter, the Contractor may only request such evidence if (1) the Owner fails to make payments to the Contractor as the Contract Documents require; (2) a change in the Work materially changes the Contract Sum; or (3) the Contractor identifies in writing a reasonable concern regarding the Owner's ability to make payment when due. The Owner shall furnish such evidence as a condition precedent to commencement or continuation of the Work or the

Init.
/
AIA Document A201™ – 2007. Copyright © 1911, 1915, 1918, 1925, 1937, 1951, 1958, 1961, 1963, 1966, 1970, 1976, 1987, 1997 and 2007 by The American Institute of Architects. All rights reserved. WARNING: This AIA® Document is protected by U.S. Copyright Law and International Treaties. Unauthorized reproduction or distribution of this AIA® Document, or any portion of it, may result in severe civil and criminal penalties, and will be prosecuted to the maximum extent possible under the law. This document was produced by AIA software at 11:33:29 on 07/22/2010 under Order No.1410090278_1 which expires on 01/22/2011, and is not for resale.
User Notes:
(1769226833)

portion of the Work affected by a material change. After the Owner furnishes the evidence, the Owner shall not materially vary such financial arrangements without prior notice to the Contractor.

§ 2.2.2 Except for permits and fees that are the responsibility of the Contractor under the Contract Documents, including those required under Section 3.7.1, the Owner shall secure and pay for necessary approvals, easements, assessments and charges required for construction, use or occupancy of permanent structures or for permanent changes in existing facilities.

§ 2.2.3 The Owner shall furnish surveys describing physical characteristics, legal limitations and utility locations for the site of the Project, and a legal description of the site. The Contractor shall be entitled to rely on the accuracy of information furnished by the Owner but shall exercise proper precautions relating to the safe performance of the Work.

§ 2.2.4 The Owner shall furnish information or services required of the Owner by the Contract Documents with reasonable promptness. The Owner shall also furnish any other information or services under the Owner's control and relevant to the Contractor's performance of the Work with reasonable promptness after receiving the Contractor's written request for such information or services.

§ 2.2.5 Unless otherwise provided in the Contract Documents, the Owner shall furnish to the Contractor one copy of the Contract Documents for purposes of making reproductions pursuant to Section 1.5.2.

§ 2.3 OWNER'S RIGHT TO STOP THE WORK

If the Contractor fails to correct Work that is not in accordance with the requirements of the Contract Documents as required by Section 12.2 or repeatedly fails to carry out Work in accordance with the Contract Documents, the Owner may issue a written order to the Contractor to stop the Work, or any portion thereof, until the cause for such order has been eliminated; however, the right of the Owner to stop the Work shall not give rise to a duty on the part of the Owner to exercise this right for the benefit of the Contractor or any other person or entity, except to the extent required by Section 6.1.3.

§ 2.4 OWNER'S RIGHT TO CARRY OUT THE WORK

If the Contractor defaults or neglects to carry out the Work in accordance with the Contract Documents and fails within a ten-day period after receipt of written notice from the Owner to commence and continue correction of such default or neglect with diligence and promptness, the Owner may, without prejudice to other remedies the Owner may have, correct such deficiencies. In such case an appropriate Change Order shall be issued deducting from payments then or thereafter due the Contractor the reasonable cost of correcting such deficiencies, including Owner's expenses and compensation for the Architect's additional services made necessary by such default, neglect or failure. Such action by the Owner and amounts charged to the Contractor are both subject to prior approval of the Architect. If payments then or thereafter due the Contractor are not sufficient to cover such amounts, the Contractor shall pay the difference to the Owner.

ARTICLE 3 CONTRACTOR

§ 3.1 GENERAL

§ 3.1.1 The Contractor is the person or entity identified as such in the Agreement and is referred to throughout the Contract Documents as if singular in number. The Contractor shall be lawfully licensed, if required in the jurisdiction where the Project is located. The Contractor shall designate in writing a representative who shall have express authority to bind the Contractor with respect to all matters under this Contract. The term "Contractor" means the Contractor or the Contractor's authorized representative.

§ 3.1.2 The Contractor shall perform the Work in accordance with the Contract Documents.

§ 3.1.3 The Contractor shall not be relieved of obligations to perform the Work in accordance with the Contract Documents either by activities or duties of the Architect in the Architect's administration of the Contract, or by tests, inspections or approvals required or performed by persons or entities other than the Contractor.

Init.
/

AIA Document A201™ – 2007. Copyright © 1911, 1915, 1918, 1925, 1937, 1951, 1958, 1961, 1963, 1966, 1970, 1976, 1987, 1997 and 2007 by The American Institute of Architects. All rights reserved. WARNING: This AIA® Document is protected by U.S. Copyright Law and International Treaties. Unauthorized reproduction or distribution of this AIA® Document, or any portion of it, may result in severe civil and criminal penalties, and will be prosecuted to the maximum extent possible under the law. This document was produced by AIA software at 11:33:29 on 07/22/2010 under Order No.1410090278_1 which expires on 01/22/2011, and is not for resale.
User Notes:

(1769226833)

§ 3.2 REVIEW OF CONTRACT DOCUMENTS AND FIELD CONDITIONS BY CONTRACTOR

§ 3.2.1 Execution of the Contract by the Contractor is a representation that the Contractor has visited the site, become generally familiar with local conditions under which the Work is to be performed and correlated personal observations with requirements of the Contract Documents.

§ 3.2.2 Because the Contract Documents are complementary, the Contractor shall, before starting each portion of the Work, carefully study and compare the various Contract Documents relative to that portion of the Work, as well as the information furnished by the Owner pursuant to Section 2.2.3, shall take field measurements of any existing conditions related to that portion of the Work, and shall observe any conditions at the site affecting it. These obligations are for the purpose of facilitating coordination and construction by the Contractor and are not for the purpose of discovering errors, omissions, or inconsistencies in the Contract Documents; however, the Contractor shall promptly report to the Architect any errors, inconsistencies or omissions discovered by or made known to the Contractor as a request for information in such form as the Architect may require. It is recognized that the Contractor's review is made in the Contractor's capacity as a contractor and not as a licensed design professional, unless otherwise specifically provided in the Contract Documents.

§ 3.2.3 The Contractor is not required to ascertain that the Contract Documents are in accordance with applicable laws, statutes, ordinances, codes, rules and regulations, or lawful orders of public authorities, but the Contractor shall promptly report to the Architect any nonconformity discovered by or made known to the Contractor as a request for information in such form as the Architect may require.

§ 3.2.4 If the Contractor believes that additional cost or time is involved because of clarifications or instructions the Architect issues in response to the Contractor's notices or requests for information pursuant to Sections 3.2.2 or 3.2.3, the Contractor shall make Claims as provided in Article 15. If the Contractor fails to perform the obligations of Sections 3.2.2 or 3.2.3, the Contractor shall pay such costs and damages to the Owner as would have been avoided if the Contractor had performed such obligations. If the Contractor performs those obligations, the Contractor shall not be liable to the Owner or Architect for damages resulting from errors, inconsistencies or omissions in the Contract Documents, for differences between field measurements or conditions and the Contract Documents, or for nonconformities of the Contract Documents to applicable laws, statutes, ordinances, codes, rules and regulations, and lawful orders of public authorities.

§ 3.3 SUPERVISION AND CONSTRUCTION PROCEDURES

§ 3.3.1 The Contractor shall supervise and direct the Work, using the Contractor's best skill and attention. The Contractor shall be solely responsible for, and have control over, construction means, methods, techniques, sequences and procedures and for coordinating all portions of the Work under the Contract, unless the Contract Documents give other specific instructions concerning these matters. If the Contract Documents give specific instructions concerning construction means, methods, techniques, sequences or procedures, the Contractor shall evaluate the jobsite safety thereof and, except as stated below, shall be fully and solely responsible for the jobsite safety of such means, methods, techniques, sequences or procedures. If the Contractor determines that such means, methods, techniques, sequences or procedures may not be safe, the Contractor shall give timely written notice to the Owner and Architect and shall not proceed with that portion of the Work without further written instructions from the Architect. If the Contractor is then instructed to proceed with the required means, methods, techniques, sequences or procedures without acceptance of changes proposed by the Contractor, the Owner shall be solely responsible for any loss or damage arising solely from those Owner-required means, methods, techniques, sequences or procedures.

§ 3.3.2 The Contractor shall be responsible to the Owner for acts and omissions of the Contractor's employees, Subcontractors and their agents and employees, and other persons or entities performing portions of the Work for, or on behalf of, the Contractor or any of its Subcontractors.

§ 3.3.3 The Contractor shall be responsible for inspection of portions of Work already performed to determine that such portions are in proper condition to receive subsequent Work.

§ 3.4 LABOR AND MATERIALS

§ 3.4.1 Unless otherwise provided in the Contract Documents, the Contractor shall provide and pay for labor, materials, equipment, tools, construction equipment and machinery, water, heat, utilities, transportation, and other facilities and services necessary for proper execution and completion of the Work, whether temporary or permanent and whether or not incorporated or to be incorporated in the Work.

AIA Document A201™ – 2007. Copyright © 1911, 1915, 1918, 1925, 1937, 1951, 1958, 1961, 1963, 1966, 1970, 1976, 1987, 1997 and 2007 by The American Institute of Architects. **All rights reserved.** WARNING: This AIA® Document is protected by U.S. Copyright Law and International Treaties. Unauthorized reproduction or distribution of this AIA® Document, or any portion of it, may result in severe civil and criminal penalties, and will be prosecuted to the maximum extent possible under the law. This document was produced by AIA software at 11:33:29 on 07/22/2010 under Order No.1410090278_1 which expires on 01/22/2011, and is not for resale.
User Notes:

§ 3.4.2 Except in the case of minor changes in the Work authorized by the Architect in accordance with Sections 3.12.8 or 7.4, the Contractor may make substitutions only with the consent of the Owner, after evaluation by the Architect and in accordance with a Change Order or Construction Change Directive.

§ 3.4.3 The Contractor shall enforce strict discipline and good order among the Contractor's employees and other persons carrying out the Work. The Contractor shall not permit employment of unfit persons or persons not properly skilled in tasks assigned to them.

§ 3.5 WARRANTY

The Contractor warrants to the Owner and Architect that materials and equipment furnished under the Contract will be of good quality and new unless the Contract Documents require or permit otherwise. The Contractor further warrants that the Work will conform to the requirements of the Contract Documents and will be free from defects, except for those inherent in the quality of the Work the Contract Documents require or permit. Work, materials, or equipment not conforming to these requirements may be considered defective. The Contractor's warranty excludes remedy for damage or defect caused by abuse, alterations to the Work not executed by the Contractor, improper or insufficient maintenance, improper operation, or normal wear and tear and normal usage. If required by the Architect, the Contractor shall furnish satisfactory evidence as to the kind and quality of materials and equipment.

§ 3.6 TAXES

The Contractor shall pay sales, consumer, use and similar taxes for the Work provided by the Contractor that are legally enacted when bids are received or negotiations concluded, whether or not yet effective or merely scheduled to go into effect.

§ 3.7 PERMITS, FEES, NOTICES, AND COMPLIANCE WITH LAWS

§ 3.7.1 Unless otherwise provided in the Contract Documents, the Contractor shall secure and pay for the building permit as well as for other permits, fees, licenses, and inspections by government agencies necessary for proper execution and completion of the Work that are customarily secured after execution of the Contract and legally required at the time bids are received or negotiations concluded.

§ 3.7.2 The Contractor shall comply with and give notices required by applicable laws, statutes, ordinances, codes, rules and regulations, and lawful orders of public authorities applicable to performance of the Work.

§ 3.7.3 If the Contractor performs Work knowing it to be contrary to applicable laws, statutes, ordinances, codes, rules and regulations, or lawful orders of public authorities, the Contractor shall assume appropriate responsibility for such Work and shall bear the costs attributable to correction.

§ 3.7.4 **Concealed or Unknown Conditions.** If the Contractor encounters conditions at the site that are (1) subsurface or otherwise concealed physical conditions that differ materially from those indicated in the Contract Documents or (2) unknown physical conditions of an unusual nature, that differ materially from those ordinarily found to exist and generally recognized as inherent in construction activities of the character provided for in the Contract Documents, the Contractor shall promptly provide notice to the Owner and the Architect before conditions are disturbed and in no event later than 21 days after first observance of the conditions. The Architect will promptly investigate such conditions and, if the Architect determines that they differ materially and cause an increase or decrease in the Contractor's cost of, or time required for, performance of any part of the Work, will recommend an equitable adjustment in the Contract Sum or Contract Time, or both. If the Architect determines that the conditions at the site are not materially different from those indicated in the Contract Documents and that no change in the terms of the Contract is justified, the Architect shall promptly notify the Owner and Contractor in writing, stating the reasons. If either party disputes the Architect's determination or recommendation, that party may proceed as provided in Article 15.

§ 3.7.5 If, in the course of the Work, the Contractor encounters human remains or recognizes the existence of burial markers, archaeological sites or wetlands not indicated in the Contract Documents, the Contractor shall immediately suspend any operations that would affect them and shall notify the Owner and Architect. Upon receipt of such notice, the Owner shall promptly take any action necessary to obtain governmental authorization required to resume the operations. The Contractor shall continue to suspend such operations until otherwise instructed by the Owner but shall continue with all other operations that do not affect those remains or features. Requests for adjustments in the Contract Sum and Contract Time arising from the existence of such remains or features may be made as provided in Article 15.

Init. / AIA Document A201™ – 2007. Copyright © 1911, 1915, 1918, 1925, 1937, 1951, 1958, 1961, 1963, 1966, 1970, 1976, 1987, 1997 and 2007 by The American Institute of Architects. **All rights reserved.** WARNING: This AIA® Document is protected by U.S. Copyright Law and International Treaties. Unauthorized reproduction or distribution of this AIA® Document, or any portion of it, may result in severe civil and criminal penalties, and will be prosecuted to the maximum extent possible under the law. This document was produced by AIA software at 11:33:29 on 07/22/2010 under Order No.1410090278_1 which expires on 01/22/2011, and is not for resale.
User Notes: (1769226833)

§ 3.8 ALLOWANCES

§ 3.8.1 The Contractor shall include in the Contract Sum all allowances stated in the Contract Documents. Items covered by allowances shall be supplied for such amounts and by such persons or entities as the Owner may direct, but the Contractor shall not be required to employ persons or entities to whom the Contractor has reasonable objection.

§ 3.8.2 Unless otherwise provided in the Contract Documents,

- .1 allowances shall cover the cost to the Contractor of materials and equipment delivered at the site and all required taxes, less applicable trade discounts;
- .2 Contractor's costs for unloading and handling at the site, labor, installation costs, overhead, profit and other expenses contemplated for stated allowance amounts shall be included in the Contract Sum but not in the allowances; and
- .3 whenever costs are more than or less than allowances, the Contract Sum shall be adjusted accordingly by Change Order. The amount of the Change Order shall reflect (1) the difference between actual costs and the allowances under Section 3.8.2.1 and (2) changes in Contractor's costs under Section 3.8.2.2.

§ 3.8.3 Materials and equipment under an allowance shall be selected by the Owner with reasonable promptness.

§ 3.9 SUPERINTENDENT

§ 3.9.1 The Contractor shall employ a competent superintendent and necessary assistants who shall be in attendance at the Project site during performance of the Work. The superintendent shall represent the Contractor, and communications given to the superintendent shall be as binding as if given to the Contractor.

§ 3.9.2 The Contractor, as soon as practicable after award of the Contract, shall furnish in writing to the Owner through the Architect the name and qualifications of a proposed superintendent. The Architect may reply within 14 days to the Contractor in writing stating (1) whether the Owner or the Architect has reasonable objection to the proposed superintendent or (2) that the Architect requires additional time to review. Failure of the Architect to reply within the 14 day period shall constitute notice of no reasonable objection.

§ 3.9.3 The Contractor shall not employ a proposed superintendent to whom the Owner or Architect has made reasonable and timely objection. The Contractor shall not change the superintendent without the Owner's consent, which shall not unreasonably be withheld or delayed.

§ 3.10 CONTRACTOR'S CONSTRUCTION SCHEDULES

§ 3.10.1 The Contractor, promptly after being awarded the Contract, shall prepare and submit for the Owner's and Architect's information a Contractor's construction schedule for the Work. The schedule shall not exceed time limits current under the Contract Documents, shall be revised at appropriate intervals as required by the conditions of the Work and Project, shall be related to the entire Project to the extent required by the Contract Documents, and shall provide for expeditious and practicable execution of the Work.

§ 3.10.2 The Contractor shall prepare a submittal schedule, promptly after being awarded the Contract and thereafter as necessary to maintain a current submittal schedule, and shall submit the schedule(s) for the Architect's approval. The Architect's approval shall not unreasonably be delayed or withheld. The submittal schedule shall (1) be coordinated with the Contractor's construction schedule, and (2) allow the Architect reasonable time to review submittals. If the Contractor fails to submit a submittal schedule, the Contractor shall not be entitled to any increase in Contract Sum or extension of Contract Time based on the time required for review of submittals.

§ 3.10.3 The Contractor shall perform the Work in general accordance with the most recent schedules submitted to the Owner and Architect.

§ 3.11 DOCUMENTS AND SAMPLES AT THE SITE

The Contractor shall maintain at the site for the Owner one copy of the Drawings, Specifications, Addenda, Change Orders and other Modifications, in good order and marked currently to indicate field changes and selections made during construction, and one copy of approved Shop Drawings, Product Data, Samples and similar required submittals. These shall be available to the Architect and shall be delivered to the Architect for submittal to the Owner upon completion of the Work as a record of the Work as constructed.

Init. /

AIA Document A201™ – 2007. Copyright © 1911, 1915, 1918, 1925, 1937, 1951, 1958, 1961, 1963, 1966, 1970, 1976, 1987, 1997 and 2007 by The American Institute of Architects. All rights reserved. WARNING: This AIA® Document is protected by U.S. Copyright Law and International Treaties. Unauthorized reproduction or distribution of this AIA® Document, or any portion of it, may result in severe civil and criminal penalties, and will be prosecuted to the maximum extent possible under the law. This document was produced by AIA software at 11:33:29 on 07/22/2010 under Order No.1410090278_1 which expires on 01/22/2011, and is not for resale.
User Notes: (1769226833)

§ 3.12 SHOP DRAWINGS, PRODUCT DATA AND SAMPLES

§ 3.12.1 Shop Drawings are drawings, diagrams, schedules and other data specially prepared for the Work by the Contractor or a Subcontractor, Sub-subcontractor, manufacturer, supplier or distributor to illustrate some portion of the Work.

§ 3.12.2 Product Data are illustrations, standard schedules, performance charts, instructions, brochures, diagrams and other information furnished by the Contractor to illustrate materials or equipment for some portion of the Work.

§ 3.12.3 Samples are physical examples that illustrate materials, equipment or workmanship and establish standards by which the Work will be judged.

§ 3.12.4 Shop Drawings, Product Data, Samples and similar submittals are not Contract Documents. Their purpose is to demonstrate the way by which the Contractor proposes to conform to the information given and the design concept expressed in the Contract Documents for those portions of the Work for which the Contract Documents require submittals. Review by the Architect is subject to the limitations of Section 4.2.7. Informational submittals upon which the Architect is not expected to take responsive action may be so identified in the Contract Documents. Submittals that are not required by the Contract Documents may be returned by the Architect without action.

§ 3.12.5 The Contractor shall review for compliance with the Contract Documents, approve and submit to the Architect Shop Drawings, Product Data, Samples and similar submittals required by the Contract Documents in accordance with the submittal schedule approved by the Architect or, in the absence of an approved submittal schedule, with reasonable promptness and in such sequence as to cause no delay in the Work or in the activities of the Owner or of separate contractors.

§ 3.12.6 By submitting Shop Drawings, Product Data, Samples and similar submittals, the Contractor represents to the Owner and Architect that the Contractor has (1) reviewed and approved them, (2) determined and verified materials, field measurements and field construction criteria related thereto, or will do so and (3) checked and coordinated the information contained within such submittals with the requirements of the Work and of the Contract Documents.

§ 3.12.7 The Contractor shall perform no portion of the Work for which the Contract Documents require submittal and review of Shop Drawings, Product Data, Samples or similar submittals until the respective submittal has been approved by the Architect.

§ 3.12.8 The Work shall be in accordance with approved submittals except that the Contractor shall not be relieved of responsibility for deviations from requirements of the Contract Documents by the Architect's approval of Shop Drawings, Product Data, Samples or similar submittals unless the Contractor has specifically informed the Architect in writing of such deviation at the time of submittal and (1) the Architect has given written approval to the specific deviation as a minor change in the Work, or (2) a Change Order or Construction Change Directive has been issued authorizing the deviation. The Contractor shall not be relieved of responsibility for errors or omissions in Shop Drawings, Product Data, Samples or similar submittals by the Architect's approval thereof.

§ 3.12.9 The Contractor shall direct specific attention, in writing or on resubmitted Shop Drawings, Product Data, Samples or similar submittals, to revisions other than those requested by the Architect on previous submittals. In the absence of such written notice, the Architect's approval of a resubmission shall not apply to such revisions.

§ 3.12.10 The Contractor shall not be required to provide professional services that constitute the practice of architecture or engineering unless such services are specifically required by the Contract Documents for a portion of the Work or unless the Contractor needs to provide such services in order to carry out the Contractor's responsibilities for construction means, methods, techniques, sequences and procedures. The Contractor shall not be required to provide professional services in violation of applicable law. If professional design services or certifications by a design professional related to systems, materials or equipment are specifically required of the Contractor by the Contract Documents, the Owner and the Architect will specify all performance and design criteria that such services must satisfy. The Contractor shall cause such services or certifications to be provided by a properly licensed design professional, whose signature and seal shall appear on all drawings, calculations, specifications, certifications, Shop Drawings and other submittals prepared by such professional. Shop Drawings and other submittals related to the Work designed or certified by such professional, if prepared by others, shall bear such professional's written approval when submitted to the Architect. The Owner and the Architect shall be entitled to rely upon the adequacy, accuracy and

AIA Document A201™ – 2007. Copyright © 1911, 1915, 1918, 1925, 1937, 1951, 1958, 1961, 1963, 1966, 1970, 1976, 1987, 1997 and 2007 by The American Institute of Architects. All rights reserved. WARNING: This AIA® Document is protected by U.S. Copyright Law and International Treaties. Unauthorized reproduction or distribution of this AIA® Document, or any portion of it, may result in severe civil and criminal penalties, and will be prosecuted to the maximum extent possible under the law. This document was produced by AIA software at 11:33:29 on 07/22/2010 under Order No.1410090278_1 which expires on 01/22/2011, and is not for resale.
User Notes:

completeness of the services, certifications and approvals performed or provided by such design professionals, provided the Owner and Architect have specified to the Contractor all performance and design criteria that such services must satisfy. Pursuant to this Section 3.12.10, the Architect will review, approve or take other appropriate action on submittals only for the limited purpose of checking for conformance with information given and the design concept expressed in the Contract Documents. The Contractor shall not be responsible for the adequacy of the performance and design criteria specified in the Contract Documents.

§ 3.13 USE OF SITE

The Contractor shall confine operations at the site to areas permitted by applicable laws, statutes, ordinances, codes, rules and regulations, and lawful orders of public authorities and the Contract Documents and shall not unreasonably encumber the site with materials or equipment.

§ 3.14 CUTTING AND PATCHING

§ 3.14.1 The Contractor shall be responsible for cutting, fitting or patching required to complete the Work or to make its parts fit together properly. All areas requiring cutting, fitting and patching shall be restored to the condition existing prior to the cutting, fitting and patching, unless otherwise required by the Contract Documents.

§ 3.14.2 The Contractor shall not damage or endanger a portion of the Work or fully or partially completed construction of the Owner or separate contractors by cutting, patching or otherwise altering such construction, or by excavation. The Contractor shall not cut or otherwise alter such construction by the Owner or a separate contractor except with written consent of the Owner and of such separate contractor; such consent shall not be unreasonably withheld. The Contractor shall not unreasonably withhold from the Owner or a separate contractor the Contractor's consent to cutting or otherwise altering the Work.

§ 3.15 CLEANING UP

§ 3.15.1 The Contractor shall keep the premises and surrounding area free from accumulation of waste materials or rubbish caused by operations under the Contract. At completion of the Work, the Contractor shall remove waste materials, rubbish, the Contractor's tools, construction equipment, machinery and surplus materials from and about the Project.

§ 3.15.2 If the Contractor fails to clean up as provided in the Contract Documents, the Owner may do so and Owner shall be entitled to reimbursement from the Contractor.

§ 3.16 ACCESS TO WORK

The Contractor shall provide the Owner and Architect access to the Work in preparation and progress wherever located.

§ 3.17 ROYALTIES, PATENTS AND COPYRIGHTS

The Contractor shall pay all royalties and license fees. The Contractor shall defend suits or claims for infringement of copyrights and patent rights and shall hold the Owner and Architect harmless from loss on account thereof, but shall not be responsible for such defense or loss when a particular design, process or product of a particular manufacturer or manufacturers is required by the Contract Documents, or where the copyright violations are contained in Drawings, Specifications or other documents prepared by the Owner or Architect. However, if the Contractor has reason to believe that the required design, process or product is an infringement of a copyright or a patent, the Contractor shall be responsible for such loss unless such information is promptly furnished to the Architect.

§ 3.18 INDEMNIFICATION

§ 3.18.1 To the fullest extent permitted by law the Contractor shall indemnify and hold harmless the Owner, Architect, Architect's consultants, and agents and employees of any of them from and against claims, damages, losses and expenses, including but not limited to attorneys' fees, arising out of or resulting from performance of the Work, provided that such claim, damage, loss or expense is attributable to bodily injury, sickness, disease or death, or to injury to or destruction of tangible property (other than the Work itself), but only to the extent caused by the negligent acts or omissions of the Contractor, a Subcontractor, anyone directly or indirectly employed by them or anyone for whose acts they may be liable, regardless of whether or not such claim, damage, loss or expense is caused in part by a party indemnified hereunder. Such obligation shall not be construed to negate, abridge, or reduce other rights or obligations of indemnity which would otherwise exist as to a party or person described in this Section 3.18.

AIA Document A201™ – 2007. Copyright © 1911, 1915, 1918, 1925, 1937, 1951, 1958, 1961, 1963, 1966, 1970, 1976, 1987, 1997 and 2007 by The American Institute of Architects. All rights reserved. WARNING: This AIA® Document is protected by U.S. Copyright Law and International Treaties. Unauthorized reproduction or distribution of this AIA® Document, or any portion of it, may result in severe civil and criminal penalties, and will be prosecuted to the maximum extent possible under the law. This document was produced by AIA software at 11:33:29 on 07/22/2010 under Order No.1410090278_1 which expires on 01/22/2011, and is not for resale.
User Notes:

(1769226833)

§ 3.18.2 In claims against any person or entity indemnified under this Section 3.18 by an employee of the Contractor, a Subcontractor, anyone directly or indirectly employed by them or anyone for whose acts they may be liable, the indemnification obligation under Section 3.18.1 shall not be limited by a limitation on amount or type of damages, compensation or benefits payable by or for the Contractor or a Subcontractor under workers' compensation acts, disability benefit acts or other employee benefit acts.

ARTICLE 4 ARCHITECT

§ 4.1 GENERAL

§ 4.1.1 The Owner shall retain an architect lawfully licensed to practice architecture or an entity lawfully practicing architecture in the jurisdiction where the Project is located. That person or entity is identified as the Architect in the Agreement and is referred to throughout the Contract Documents as if singular in number.

§ 4.1.2 Duties, responsibilities and limitations of authority of the Architect as set forth in the Contract Documents shall not be restricted, modified or extended without written consent of the Owner, Contractor and Architect. Consent shall not be unreasonably withheld.

§ 4.1.3 If the employment of the Architect is terminated, the Owner shall employ a successor architect as to whom the Contractor has no reasonable objection and whose status under the Contract Documents shall be that of the Architect.

§ 4.2 ADMINISTRATION OF THE CONTRACT

§ 4.2.1 The Architect will provide administration of the Contract as described in the Contract Documents and will be an Owner's representative during construction until the date the Architect issues the final Certificate For Payment. The Architect will have authority to act on behalf of the Owner only to the extent provided in the Contract Documents.

§ 4.2.2 The Architect will visit the site at intervals appropriate to the stage of construction, or as otherwise agreed with the Owner, to become generally familiar with the progress and quality of the portion of the Work completed, and to determine in general if the Work observed is being performed in a manner indicating that the Work, when fully completed, will be in accordance with the Contract Documents. However, the Architect will not be required to make exhaustive or continuous on-site inspections to check the quality or quantity of the Work. The Architect will not have control over, charge of, or responsibility for, the construction means, methods, techniques, sequences or procedures, or for the safety precautions and programs in connection with the Work, since these are solely the Contractor's rights and responsibilities under the Contract Documents, except as provided in Section 3.3.1.

§ 4.2.3 On the basis of the site visits, the Architect will keep the Owner reasonably informed about the progress and quality of the portion of the Work completed, and report to the Owner (1) known deviations from the Contract Documents and from the most recent construction schedule submitted by the Contractor, and (2) defects and deficiencies observed in the Work. The Architect will not be responsible for the Contractor's failure to perform the Work in accordance with the requirements of the Contract Documents. The Architect will not have control over or charge of and will not be responsible for acts or omissions of the Contractor, Subcontractors, or their agents or employees, or any other persons or entities performing portions of the Work.

§ 4.2.4 COMMUNICATIONS FACILITATING CONTRACT ADMINISTRATION

Except as otherwise provided in the Contract Documents or when direct communications have been specially authorized, the Owner and Contractor shall endeavor to communicate with each other through the Architect about matters arising out of or relating to the Contract. Communications by and with the Architect's consultants shall be through the Architect. Communications by and with Subcontractors and material suppliers shall be through the Contractor. Communications by and with separate contractors shall be through the Owner.

§ 4.2.5 Based on the Architect's evaluations of the Contractor's Applications for Payment, the Architect will review and certify the amounts due the Contractor and will issue Certificates for Payment in such amounts.

§ 4.2.6 The Architect has authority to reject Work that does not conform to the Contract Documents. Whenever the Architect considers it necessary or advisable, the Architect will have authority to require inspection or testing of the Work in accordance with Sections 13.5.2 and 13.5.3, whether or not such Work is fabricated, installed or completed. However, neither this authority of the Architect nor a decision made in good faith either to exercise or not to exercise such authority shall give rise to a duty or responsibility of the Architect to the Contractor, Subcontractors, material and equipment suppliers, their agents or employees, or other persons or entities performing portions of the Work.

AIA Document A201™ – 2007. Copyright © 1911, 1915, 1918, 1925, 1937, 1951, 1958, 1961, 1963, 1966, 1970, 1976, 1987, 1997 and 2007 by The American Institute of Architects. All rights reserved. WARNING: This AIA® Document is protected by U.S. Copyright Law and International Treaties. Unauthorized reproduction or distribution of this AIA® Document, or any portion of it, may result in severe civil and criminal penalties, and will be prosecuted to the maximum extent possible under the law. This document was produced by AIA software at 11:33:29 on 07/22/2010 under Order No.1410090278_1 which expires on 01/22/2011, and is not for resale.
User Notes:

(1769226833)

§ **4.2.7** The Architect will review and approve, or take other appropriate action upon, the Contractor's submittals such as Shop Drawings, Product Data and Samples, but only for the limited purpose of checking for conformance with information given and the design concept expressed in the Contract Documents. The Architect's action will be taken in accordance with the submittal schedule approved by the Architect or, in the absence of an approved submittal schedule, with reasonable promptness while allowing sufficient time in the Architect's professional judgment to permit adequate review. Review of such submittals is not conducted for the purpose of determining the accuracy and completeness of other details such as dimensions and quantities, or for substantiating instructions for installation or performance of equipment or systems, all of which remain the responsibility of the Contractor as required by the Contract Documents. The Architect's review of the Contractor's submittals shall not relieve the Contractor of the obligations under Sections 3.3, 3.5 and 3.12. The Architect's review shall not constitute approval of safety precautions or, unless otherwise specifically stated by the Architect, of any construction means, methods, techniques, sequences or procedures. The Architect's approval of a specific item shall not indicate approval of an assembly of which the item is a component.

§ **4.2.8** The Architect will prepare Change Orders and Construction Change Directives, and may authorize minor changes in the Work as provided in Section 7.4. The Architect will investigate and make determinations and recommendations regarding concealed and unknown conditions as provided in Section 3.7.4.

§ **4.2.9** The Architect will conduct inspections to determine the date or dates of Substantial Completion and the date of final completion; issue Certificates of Substantial Completion pursuant to Section 9.8; receive and forward to the Owner, for the Owner's review and records, written warranties and related documents required by the Contract and assembled by the Contractor pursuant to Section 9.10; and issue a final Certificate for Payment pursuant to Section 9.10.

§ **4.2.10** If the Owner and Architect agree, the Architect will provide one or more project representatives to assist in carrying out the Architect's responsibilities at the site. The duties, responsibilities and limitations of authority of such project representatives shall be as set forth in an exhibit to be incorporated in the Contract Documents.

§ **4.2.11** The Architect will interpret and decide matters concerning performance under, and requirements of, the Contract Documents on written request of either the Owner or Contractor. The Architect's response to such requests will be made in writing within any time limits agreed upon or otherwise with reasonable promptness.

§ **4.2.12** Interpretations and decisions of the Architect will be consistent with the intent of, and reasonably inferable from, the Contract Documents and will be in writing or in the form of drawings. When making such interpretations and decisions, the Architect will endeavor to secure faithful performance by both Owner and Contractor, will not show partiality to either and will not be liable for results of interpretations or decisions rendered in good faith.

§ **4.2.13** The Architect's decisions on matters relating to aesthetic effect will be final if consistent with the intent expressed in the Contract Documents.

§ **4.2.14** The Architect will review and respond to requests for information about the Contract Documents. The Architect's response to such requests will be made in writing within any time limits agreed upon or otherwise with reasonable promptness. If appropriate, the Architect will prepare and issue supplemental Drawings and Specifications in response to the requests for information.

ARTICLE 5 SUBCONTRACTORS

§ 5.1 DEFINITIONS

§ **5.1.1** A Subcontractor is a person or entity who has a direct contract with the Contractor to perform a portion of the Work at the site. The term "Subcontractor" is referred to throughout the Contract Documents as if singular in number and means a Subcontractor or an authorized representative of the Subcontractor. The term "Subcontractor" does not include a separate contractor or subcontractors of a separate contractor.

§ **5.1.2** A Sub-subcontractor is a person or entity who has a direct or indirect contract with a Subcontractor to perform a portion of the Work at the site. The term "Sub-subcontractor" is referred to throughout the Contract Documents as if singular in number and means a Sub-subcontractor or an authorized representative of the Sub-subcontractor.

AIA Document A201™ – 2007. Copyright © 1911, 1915, 1918, 1925, 1937, 1951, 1958, 1961, 1963, 1966, 1970, 1976, 1987, 1997 and 2007 by The American Institute of Architects. **All rights reserved.** WARNING: This AIA® Document is protected by U.S. Copyright Law and International Treaties. Unauthorized reproduction or distribution of this AIA® Document, or any portion of it, may result in severe civil and criminal penalties, and will be prosecuted to the maximum extent possible under the law. This document was produced by AIA software at 11:33:29 on 07/22/2010 under Order No.1410090278_1 which expires on 01/22/2011, and is not for resale.
User Notes:

§ 5.2 AWARD OF SUBCONTRACTS AND OTHER CONTRACTS FOR PORTIONS OF THE WORK

§ 5.2.1 Unless otherwise stated in the Contract Documents or the bidding requirements, the Contractor, as soon as practicable after award of the Contract, shall furnish in writing to the Owner through the Architect the names of persons or entities (including those who are to furnish materials or equipment fabricated to a special design) proposed for each principal portion of the Work. The Architect may reply within 14 days to the Contractor in writing stating (1) whether the Owner or the Architect has reasonable objection to any such proposed person or entity or (2) that the Architect requires additional time for review. Failure of the Owner or Architect to reply within the 14 day period shall constitute notice of no reasonable objection.

§ 5.2.2 The Contractor shall not contract with a proposed person or entity to whom the Owner or Architect has made reasonable and timely objection. The Contractor shall not be required to contract with anyone to whom the Contractor has made reasonable objection.

§ 5.2.3 If the Owner or Architect has reasonable objection to a person or entity proposed by the Contractor, the Contractor shall propose another to whom the Owner or Architect has no reasonable objection. If the proposed but rejected Subcontractor was reasonably capable of performing the Work, the Contract Sum and Contract Time shall be increased or decreased by the difference, if any, occasioned by such change, and an appropriate Change Order shall be issued before commencement of the substitute Subcontractor's Work. However, no increase in the Contract Sum or Contract Time shall be allowed for such change unless the Contractor has acted promptly and responsively in submitting names as required.

§ 5.2.4 The Contractor shall not substitute a Subcontractor, person or entity previously selected if the Owner or Architect makes reasonable objection to such substitution.

§ 5.3 SUBCONTRACTUAL RELATIONS

By appropriate agreement, written where legally required for validity, the Contractor shall require each Subcontractor, to the extent of the Work to be performed by the Subcontractor, to be bound to the Contractor by terms of the Contract Documents, and to assume toward the Contractor all the obligations and responsibilities, including the responsibility for safety of the Subcontractor's Work, which the Contractor, by these Documents, assumes toward the Owner and Architect. Each subcontract agreement shall preserve and protect the rights of the Owner and Architect under the Contract Documents with respect to the Work to be performed by the Subcontractor so that subcontracting thereof will not prejudice such rights, and shall allow to the Subcontractor, unless specifically provided otherwise in the subcontract agreement, the benefit of all rights, remedies and redress against the Contractor that the Contractor, by the Contract Documents, has against the Owner. Where appropriate, the Contractor shall require each Subcontractor to enter into similar agreements with Sub-subcontractors. The Contractor shall make available to each proposed Subcontractor, prior to the execution of the subcontract agreement, copies of the Contract Documents to which the Subcontractor will be bound, and, upon written request of the Subcontractor, identify to the Subcontractor terms and conditions of the proposed subcontract agreement that may be at variance with the Contract Documents. Subcontractors will similarly make copies of applicable portions of such documents available to their respective proposed Sub-subcontractors.

§ 5.4 CONTINGENT ASSIGNMENT OF SUBCONTRACTS

§ 5.4.1 Each subcontract agreement for a portion of the Work is assigned by the Contractor to the Owner, provided that

- .1 assignment is effective only after termination of the Contract by the Owner for cause pursuant to Section 14.2 and only for those subcontract agreements that the Owner accepts by notifying the Subcontractor and Contractor in writing; and
- .2 assignment is subject to the prior rights of the surety, if any, obligated under bond relating to the Contract.

When the Owner accepts the assignment of a subcontract agreement, the Owner assumes the Contractor's rights and obligations under the subcontract.

§ 5.4.2 Upon such assignment, if the Work has been suspended for more than 30 days, the Subcontractor's compensation shall be equitably adjusted for increases in cost resulting from the suspension.

§ 5.4.3 Upon such assignment to the Owner under this Section 5.4, the Owner may further assign the subcontract to a successor contractor or other entity. If the Owner assigns the subcontract to a successor contractor or other entity, the

Init. / **AIA Document A201™ – 2007.** Copyright © 1911, 1915, 1918, 1925, 1937, 1951, 1958, 1961, 1963, 1966, 1970, 1976, 1987, 1997 and 2007 by The American Institute of Architects. **All rights reserved.** WARNING: This AIA® Document is protected by U.S. Copyright Law and International Treaties. Unauthorized reproduction or distribution of this AIA® Document, or any portion of it, may result in severe civil and criminal penalties, and will be prosecuted to the maximum extent possible under the law. This document was produced by AIA software at 11:33:29 on 07/22/2010 under Order No.1410090278_1 which expires on 01/22/2011, and is not for resale.
User Notes: (1769226833)

Owner shall nevertheless remain legally responsible for all of the successor contractor's obligations under the subcontract.

ARTICLE 6 CONSTRUCTION BY OWNER OR BY SEPARATE CONTRACTORS

§ 6.1 OWNER'S RIGHT TO PERFORM CONSTRUCTION AND TO AWARD SEPARATE CONTRACTS

§ 6.1.1 The Owner reserves the right to perform construction or operations related to the Project with the Owner's own forces, and to award separate contracts in connection with other portions of the Project or other construction or operations on the site under Conditions of the Contract identical or substantially similar to these including those portions related to insurance and waiver of subrogation. If the Contractor claims that delay or additional cost is involved because of such action by the Owner, the Contractor shall make such Claim as provided in Article 15.

§ 6.1.2 When separate contracts are awarded for different portions of the Project or other construction or operations on the site, the term "Contractor" in the Contract Documents in each case shall mean the Contractor who executes each separate Owner-Contractor Agreement.

§ 6.1.3 The Owner shall provide for coordination of the activities of the Owner's own forces and of each separate contractor with the Work of the Contractor, who shall cooperate with them. The Contractor shall participate with other separate contractors and the Owner in reviewing their construction schedules. The Contractor shall make any revisions to the construction schedule deemed necessary after a joint review and mutual agreement. The construction schedules shall then constitute the schedules to be used by the Contractor, separate contractors and the Owner until subsequently revised.

§ 6.1.4 Unless otherwise provided in the Contract Documents, when the Owner performs construction or operations related to the Project with the Owner's own forces, the Owner shall be deemed to be subject to the same obligations and to have the same rights that apply to the Contractor under the Conditions of the Contract, including, without excluding others, those stated in Article 3, this Article 6 and Articles 10, 11 and 12.

§ 6.2 MUTUAL RESPONSIBILITY

§ 6.2.1 The Contractor shall afford the Owner and separate contractors reasonable opportunity for introduction and storage of their materials and equipment and performance of their activities, and shall connect and coordinate the Contractor's construction and operations with theirs as required by the Contract Documents.

§ 6.2.2 If part of the Contractor's Work depends for proper execution or results upon construction or operations by the Owner or a separate contractor, the Contractor shall, prior to proceeding with that portion of the Work, promptly report to the Architect apparent discrepancies or defects in such other construction that would render it unsuitable for such proper execution and results. Failure of the Contractor so to report shall constitute an acknowledgment that the Owner's or separate contractor's completed or partially completed construction is fit and proper to receive the Contractor's Work, except as to defects not then reasonably discoverable.

§ 6.2.3 The Contractor shall reimburse the Owner for costs the Owner incurs that are payable to a separate contractor because of the Contractor's delays, improperly timed activities or defective construction. The Owner shall be responsible to the Contractor for costs the Contractor incurs because of a separate contractor's delays, improperly timed activities, damage to the Work or defective construction.

§ 6.2.4 The Contractor shall promptly remedy damage the Contractor wrongfully causes to completed or partially completed construction or to property of the Owner or separate contractors as provided in Section 10.2.5.

§ 6.2.5 The Owner and each separate contractor shall have the same responsibilities for cutting and patching as are described for the Contractor in Section 3.14.

§ 6.3 OWNER'S RIGHT TO CLEAN UP

If a dispute arises among the Contractor, separate contractors and the Owner as to the responsibility under their respective contracts for maintaining the premises and surrounding area free from waste materials and rubbish, the Owner may clean up and the Architect will allocate the cost among those responsible.

Init.
/
AIA Document A201™ – 2007. Copyright © 1911, 1915, 1918, 1925, 1937, 1951, 1958, 1961, 1963, 1966, 1970, 1976, 1987, 1997 and 2007 by The American Institute of Architects. All rights reserved. WARNING: This AIA® Document is protected by U.S. Copyright Law and International Treaties. Unauthorized reproduction or distribution of this AIA® Document, or any portion of it, may result in severe civil and criminal penalties, and will be prosecuted to the maximum extent possible under the law. This document was produced by AIA software at 11:33:29 on 07/22/2010 under Order No.1410090278_1 which expires on 01/22/2011, and is not for resale.
User Notes:
(1769226833)

ARTICLE 7 CHANGES IN THE WORK

§ 7.1 GENERAL

§ 7.1.1 Changes in the Work may be accomplished after execution of the Contract, and without invalidating the Contract, by Change Order, Construction Change Directive or order for a minor change in the Work, subject to the limitations stated in this Article 7 and elsewhere in the Contract Documents.

§ 7.1.2 A Change Order shall be based upon agreement among the Owner, Contractor and Architect; a Construction Change Directive requires agreement by the Owner and Architect and may or may not be agreed to by the Contractor; an order for a minor change in the Work may be issued by the Architect alone.

§ 7.1.3 Changes in the Work shall be performed under applicable provisions of the Contract Documents, and the Contractor shall proceed promptly, unless otherwise provided in the Change Order, Construction Change Directive or order for a minor change in the Work.

§ 7.2 CHANGE ORDERS

§ 7.2.1 A Change Order is a written instrument prepared by the Architect and signed by the Owner, Contractor and Architect stating their agreement upon all of the following:

- .1 The change in the Work;
- .2 The amount of the adjustment, if any, in the Contract Sum; and
- .3 The extent of the adjustment, if any, in the Contract Time.

§ 7.3 CONSTRUCTION CHANGE DIRECTIVES

§ 7.3.1 A Construction Change Directive is a written order prepared by the Architect and signed by the Owner and Architect, directing a change in the Work prior to agreement on adjustment, if any, in the Contract Sum or Contract Time, or both. The Owner may by Construction Change Directive, without invalidating the Contract, order changes in the Work within the general scope of the Contract consisting of additions, deletions or other revisions, the Contract Sum and Contract Time being adjusted accordingly.

§ 7.3.2 A Construction Change Directive shall be used in the absence of total agreement on the terms of a Change Order.

§ 7.3.3 If the Construction Change Directive provides for an adjustment to the Contract Sum, the adjustment shall be based on one of the following methods:

- .1 Mutual acceptance of a lump sum properly itemized and supported by sufficient substantiating data to permit evaluation;
- .2 Unit prices stated in the Contract Documents or subsequently agreed upon;
- .3 Cost to be determined in a manner agreed upon by the parties and a mutually acceptable fixed or percentage fee; or
- .4 As provided in Section 7.3.7.

§ 7.3.4 If unit prices are stated in the Contract Documents or subsequently agreed upon, and if quantities originally contemplated are materially changed in a proposed Change Order or Construction Change Directive so that application of such unit prices to quantities of Work proposed will cause substantial inequity to the Owner or Contractor, the applicable unit prices shall be equitably adjusted.

§ 7.3.5 Upon receipt of a Construction Change Directive, the Contractor shall promptly proceed with the change in the Work involved and advise the Architect of the Contractor's agreement or disagreement with the method, if any, provided in the Construction Change Directive for determining the proposed adjustment in the Contract Sum or Contract Time.

§ 7.3.6 A Construction Change Directive signed by the Contractor indicates the Contractor's agreement therewith, including adjustment in Contract Sum and Contract Time or the method for determining them. Such agreement shall be effective immediately and shall be recorded as a Change Order.

§ 7.3.7 If the Contractor does not respond promptly or disagrees with the method for adjustment in the Contract Sum, the Architect shall determine the method and the adjustment on the basis of reasonable expenditures and savings of those performing the Work attributable to the change, including, in case of an increase in the Contract Sum, an amount

AIA Document A201™ – 2007. Copyright © 1911, 1915, 1918, 1925, 1937, 1951, 1958, 1961, 1963, 1966, 1970, 1976, 1987, 1997 and 2007 by The American Institute of Architects. All rights reserved. WARNING: This AIA® Document is protected by U.S. Copyright Law and International Treaties. Unauthorized reproduction or distribution of this AIA® Document, or any portion of it, may result in severe civil and criminal penalties, and will be prosecuted to the maximum extent possible under the law. This document was produced by AIA software at 11:33:29 on 07/22/2010 under Order No.1410090278_1 which expires on 01/22/2011, and is not for resale.
User Notes:

(1769226833)

for overhead and profit as set forth in the Agreement, or if no such amount is set forth in the Agreement, a reasonable amount. In such case, and also under Section 7.3.3.3, the Contractor shall keep and present, in such form as the Architect may prescribe, an itemized accounting together with appropriate supporting data. Unless otherwise provided in the Contract Documents, costs for the purposes of this Section 7.3.7 shall be limited to the following:

.1 Costs of labor, including social security, old age and unemployment insurance, fringe benefits required by agreement or custom, and workers' compensation insurance;

.2 Costs of materials, supplies and equipment, including cost of transportation, whether incorporated or consumed;

.3 Rental costs of machinery and equipment, exclusive of hand tools, whether rented from the Contractor or others;

.4 Costs of premiums for all bonds and insurance, permit fees, and sales, use or similar taxes related to the Work; and

.5 Additional costs of supervision and field office personnel directly attributable to the change.

§ 7.3.8 The amount of credit to be allowed by the Contractor to the Owner for a deletion or change that results in a net decrease in the Contract Sum shall be actual net cost as confirmed by the Architect. When both additions and credits covering related Work or substitutions are involved in a change, the allowance for overhead and profit shall be figured on the basis of net increase, if any, with respect to that change.

§ 7.3.9 Pending final determination of the total cost of a Construction Change Directive to the Owner, the Contractor may request payment for Work completed under the Construction Change Directive in Applications for Payment. The Architect will make an interim determination for purposes of monthly certification for payment for those costs and certify for payment the amount that the Architect determines, in the Architect's professional judgment, to be reasonably justified. The Architect's interim determination of cost shall adjust the Contract Sum on the same basis as a Change Order, subject to the right of either party to disagree and assert a Claim in accordance with Article 15.

§ 7.3.10 When the Owner and Contractor agree with a determination made by the Architect concerning the adjustments in the Contract Sum and Contract Time, or otherwise reach agreement upon the adjustments, such agreement shall be effective immediately and the Architect will prepare a Change Order. Change Orders may be issued for all or any part of a Construction Change Directive.

§ 7.4 MINOR CHANGES IN THE WORK

The Architect has authority to order minor changes in the Work not involving adjustment in the Contract Sum or extension of the Contract Time and not inconsistent with the intent of the Contract Documents. Such changes will be effected by written order signed by the Architect and shall be binding on the Owner and Contractor.

ARTICLE 8 TIME

§ 8.1 DEFINITIONS

§ 8.1.1 Unless otherwise provided, Contract Time is the period of time, including authorized adjustments, allotted in the Contract Documents for Substantial Completion of the Work.

§ 8.1.2 The date of commencement of the Work is the date established in the Agreement.

§ 8.1.3 The date of Substantial Completion is the date certified by the Architect in accordance with Section 9.8.

§ 8.1.4 The term "day" as used in the Contract Documents shall mean calendar day unless otherwise specifically defined.

§ 8.2 PROGRESS AND COMPLETION

§ 8.2.1 Time limits stated in the Contract Documents are of the essence of the Contract. By executing the Agreement the Contractor confirms that the Contract Time is a reasonable period for performing the Work.

§ 8.2.2 The Contractor shall not knowingly, except by agreement or instruction of the Owner in writing, prematurely commence operations on the site or elsewhere prior to the effective date of insurance required by Article 11 to be furnished by the Contractor and Owner. The date of commencement of the Work shall not be changed by the effective date of such insurance.

Init.
/
AIA Document A201™ – 2007. Copyright © 1911, 1915, 1918, 1925, 1937, 1951, 1958, 1961, 1963, 1966, 1970, 1976, 1987, 1997 and 2007 by The American Institute of Architects. **All rights reserved.** WARNING: This AIA® Document is protected by U.S. Copyright Law and International Treaties. Unauthorized reproduction or distribution of this AIA® Document, or any portion of it, may result in severe civil and criminal penalties, and will be prosecuted to the maximum extent possible under the law. This document was produced by AIA software at 11:33:29 on 07/22/2010 under Order No.1410090278_1 which expires on 01/22/2011, and is not for resale.
User Notes:

(1769226833)

§ 8.2.3 The Contractor shall proceed expeditiously with adequate forces and shall achieve Substantial Completion within the Contract Time.

§ 8.3 DELAYS AND EXTENSIONS OF TIME

§ 8.3.1 If the Contractor is delayed at any time in the commencement or progress of the Work by an act or neglect of the Owner or Architect, or of an employee of either, or of a separate contractor employed by the Owner; or by changes ordered in the Work; or by labor disputes, fire, unusual delay in deliveries, unavoidable casualties or other causes beyond the Contractor's control; or by delay authorized by the Owner pending mediation and arbitration; or by other causes that the Architect determines may justify delay, then the Contract Time shall be extended by Change Order for such reasonable time as the Architect may determine.

§ 8.3.2 Claims relating to time shall be made in accordance with applicable provisions of Article 15.

§ 8.3.3 This Section 8.3 does not preclude recovery of damages for delay by either party under other provisions of the Contract Documents.

ARTICLE 9 PAYMENTS AND COMPLETION

§ 9.1 CONTRACT SUM

The Contract Sum is stated in the Agreement and, including authorized adjustments, is the total amount payable by the Owner to the Contractor for performance of the Work under the Contract Documents.

§ 9.2 SCHEDULE OF VALUES

Where the Contract is based on a stipulated sum or Guaranteed Maximum Price, the Contractor shall submit to the Architect, before the first Application for Payment, a schedule of values allocating the entire Contract Sum to the various portions of the Work and prepared in such form and supported by such data to substantiate its accuracy as the Architect may require. This schedule, unless objected to by the Architect, shall be used as a basis for reviewing the Contractor's Applications for Payment.

§ 9.3 APPLICATIONS FOR PAYMENT

§ 9.3.1 At least ten days before the date established for each progress payment, the Contractor shall submit to the Architect an itemized Application for Payment prepared in accordance with the schedule of values, if required under Section 9.2., for completed portions of the Work. Such application shall be notarized, if required, and supported by such data substantiating the Contractor's right to payment as the Owner or Architect may require, such as copies of requisitions from Subcontractors and material suppliers, and shall reflect retainage if provided for in the Contract Documents.

§ 9.3.1.1 As provided in Section 7.3.9, such applications may include requests for payment on account of changes in the Work that have been properly authorized by Construction Change Directives, or by interim determinations of the Architect, but not yet included in Change Orders.

§ 9.3.1.2 Applications for Payment shall not include requests for payment for portions of the Work for which the Contractor does not intend to pay a Subcontractor or material supplier, unless such Work has been performed by others whom the Contractor intends to pay.

§ 9.3.2 Unless otherwise provided in the Contract Documents, payments shall be made on account of materials and equipment delivered and suitably stored at the site for subsequent incorporation in the Work. If approved in advance by the Owner, payment may similarly be made for materials and equipment suitably stored off the site at a location agreed upon in writing. Payment for materials and equipment stored on or off the site shall be conditioned upon compliance by the Contractor with procedures satisfactory to the Owner to establish the Owner's title to such materials and equipment or otherwise protect the Owner's interest, and shall include the costs of applicable insurance, storage and transportation to the site for such materials and equipment stored off the site.

§ 9.3.3 The Contractor warrants that title to all Work covered by an Application for Payment will pass to the Owner no later than the time of payment. The Contractor further warrants that upon submittal of an Application for Payment all Work for which Certificates for Payment have been previously issued and payments received from the Owner shall, to the best of the Contractor's knowledge, information and belief, be free and clear of liens, claims, security interests or

Init. /

AIA Document A201™ – 2007. Copyright © 1911, 1915, 1918, 1925, 1937, 1951, 1958, 1961, 1963, 1966, 1970, 1976, 1987, 1997 and 2007 by The American Institute of Architects. All rights reserved. WARNING: This AIA® Document is protected by U.S. Copyright Law and International Treaties. Unauthorized reproduction or distribution of this AIA® Document, or any portion of it, may result in severe civil and criminal penalties, and will be prosecuted to the maximum extent possible under the law. This document was produced by AIA software at 11:33:29 on 07/22/2010 under Order No.1410090278_1 which expires on 01/22/2011, and is not for resale.
User Notes:

(1769226833)

encumbrances in favor of the Contractor, Subcontractors, material suppliers, or other persons or entities making a claim by reason of having provided labor, materials and equipment relating to the Work.

§ 9.4 CERTIFICATES FOR PAYMENT

§ 9.4.1 The Architect will, within seven days after receipt of the Contractor's Application for Payment, either issue to the Owner a Certificate for Payment, with a copy to the Contractor, for such amount as the Architect determines is properly due, or notify the Contractor and Owner in writing of the Architect's reasons for withholding certification in whole or in part as provided in Section 9.5.1.

§ 9.4.2 The issuance of a Certificate for Payment will constitute a representation by the Architect to the Owner, based on the Architect's evaluation of the Work and the data comprising the Application for Payment, that, to the best of the Architect's knowledge, information and belief, the Work has progressed to the point indicated and that the quality of the Work is in accordance with the Contract Documents. The foregoing representations are subject to an evaluation of the Work for conformance with the Contract Documents upon Substantial Completion, to results of subsequent tests and inspections, to correction of minor deviations from the Contract Documents prior to completion and to specific qualifications expressed by the Architect. The issuance of a Certificate for Payment will further constitute a representation that the Contractor is entitled to payment in the amount certified. However, the issuance of a Certificate for Payment will not be a representation that the Architect has (1) made exhaustive or continuous on-site inspections to check the quality or quantity of the Work, (2) reviewed construction means, methods, techniques, sequences or procedures, (3) reviewed copies of requisitions received from Subcontractors and material suppliers and other data requested by the Owner to substantiate the Contractor's right to payment, or (4) made examination to ascertain how or for what purpose the Contractor has used money previously paid on account of the Contract Sum.

§ 9.5 DECISIONS TO WITHHOLD CERTIFICATION

§ 9.5.1 The Architect may withhold a Certificate for Payment in whole or in part, to the extent reasonably necessary to protect the Owner, if in the Architect's opinion the representations to the Owner required by Section 9.4.2 cannot be made. If the Architect is unable to certify payment in the amount of the Application, the Architect will notify the Contractor and Owner as provided in Section 9.4.1. If the Contractor and Architect cannot agree on a revised amount, the Architect will promptly issue a Certificate for Payment for the amount for which the Architect is able to make such representations to the Owner. The Architect may also withhold a Certificate for Payment or, because of subsequently discovered evidence, may nullify the whole or a part of a Certificate for Payment previously issued, to such extent as may be necessary in the Architect's opinion to protect the Owner from loss for which the Contractor is responsible, including loss resulting from acts and omissions described in Section 3.3.2, because of

- .1 defective Work not remedied;
- .2 third party claims filed or reasonable evidence indicating probable filing of such claims unless security acceptable to the Owner is provided by the Contractor;
- .3 failure of the Contractor to make payments properly to Subcontractors or for labor, materials or equipment;
- .4 reasonable evidence that the Work cannot be completed for the unpaid balance of the Contract Sum;
- .5 damage to the Owner or a separate contractor;
- .6 reasonable evidence that the Work will not be completed within the Contract Time, and that the unpaid balance would not be adequate to cover actual or liquidated damages for the anticipated delay; or
- .7 repeated failure to carry out the Work in accordance with the Contract Documents.

§ 9.5.2 When the above reasons for withholding certification are removed, certification will be made for amounts previously withheld.

§ 9.5.3 If the Architect withholds certification for payment under Section 9.5.1.3, the Owner may, at its sole option, issue joint checks to the Contractor and to any Subcontractor or material or equipment suppliers to whom the Contractor failed to make payment for Work properly performed or material or equipment suitably delivered. If the Owner makes payments by joint check, the Owner shall notify the Architect and the Architect will reflect such payment on the next Certificate for Payment.

§ 9.6 PROGRESS PAYMENTS

§ 9.6.1 After the Architect has issued a Certificate for Payment, the Owner shall make payment in the manner and within the time provided in the Contract Documents, and shall so notify the Architect.

AIA Document A201™ – 2007. Copyright © 1911, 1915, 1918, 1925, 1937, 1951, 1958, 1961, 1963, 1966, 1970, 1976, 1987, 1997 and 2007 by The American Institute of Architects. All rights reserved. WARNING: This AIA® Document is protected by U.S. Copyright Law and International Treaties. Unauthorized reproduction or distribution of this AIA® Document, or any portion of it, may result in severe civil and criminal penalties, and will be prosecuted to the maximum extent possible under the law. This document was produced by AIA software at 11:33:29 on 07/22/2010 under Order No.1410090278_1 which expires on 01/22/2011, and is not for resale.
User Notes:

(1769226833)

§ 9.6.2 The Contractor shall pay each Subcontractor no later than seven days after receipt of payment from the Owner the amount to which the Subcontractor is entitled, reflecting percentages actually retained from payments to the Contractor on account of the Subcontractor's portion of the Work. The Contractor shall, by appropriate agreement with each Subcontractor, require each Subcontractor to make payments to Sub-subcontractors in a similar manner.

§ 9.6.3 The Architect will, on request, furnish to a Subcontractor, if practicable, information regarding percentages of completion or amounts applied for by the Contractor and action taken thereon by the Architect and Owner on account of portions of the Work done by such Subcontractor.

§ 9.6.4 The Owner has the right to request written evidence from the Contractor that the Contractor has properly paid Subcontractors and material and equipment suppliers amounts paid by the Owner to the Contractor for subcontracted Work. If the Contractor fails to furnish such evidence within seven days, the Owner shall have the right to contact Subcontractors to ascertain whether they have been properly paid. Neither the Owner nor Architect shall have an obligation to pay or to see to the payment of money to a Subcontractor, except as may otherwise be required by law.

§ 9.6.5 Contractor payments to material and equipment suppliers shall be treated in a manner similar to that provided in Sections 9.6.2, 9.6.3 and 9.6.4.

§ 9.6.6 A Certificate for Payment, a progress payment, or partial or entire use or occupancy of the Project by the Owner shall not constitute acceptance of Work not in accordance with the Contract Documents.

§ 9.6.7 Unless the Contractor provides the Owner with a payment bond in the full penal sum of the Contract Sum, payments received by the Contractor for Work properly performed by Subcontractors and suppliers shall be held by the Contractor for those Subcontractors or suppliers who performed Work or furnished materials, or both, under contract with the Contractor for which payment was made by the Owner. Nothing contained herein shall require money to be placed in a separate account and not commingled with money of the Contractor, shall create any fiduciary liability or tort liability on the part of the Contractor for breach of trust or shall entitle any person or entity to an award of punitive damages against the Contractor for breach of the requirements of this provision.

§ 9.7 FAILURE OF PAYMENT

If the Architect does not issue a Certificate for Payment, through no fault of the Contractor, within seven days after receipt of the Contractor's Application for Payment, or if the Owner does not pay the Contractor within seven days after the date established in the Contract Documents the amount certified by the Architect or awarded by binding dispute resolution, then the Contractor may, upon seven additional days' written notice to the Owner and Architect, stop the Work until payment of the amount owing has been received. The Contract Time shall be extended appropriately and the Contract Sum shall be increased by the amount of the Contractor's reasonable costs of shut-down, delay and start-up, plus interest as provided for in the Contract Documents.

§ 9.8 SUBSTANTIAL COMPLETION

§ 9.8.1 Substantial Completion is the stage in the progress of the Work when the Work or designated portion thereof is sufficiently complete in accordance with the Contract Documents so that the Owner can occupy or utilize the Work for its intended use.

§ 9.8.2 When the Contractor considers that the Work, or a portion thereof which the Owner agrees to accept separately, is substantially complete, the Contractor shall prepare and submit to the Architect a comprehensive list of items to be completed or corrected prior to final payment. Failure to include an item on such list does not alter the responsibility of the Contractor to complete all Work in accordance with the Contract Documents.

§ 9.8.3 Upon receipt of the Contractor's list, the Architect will make an inspection to determine whether the Work or designated portion thereof is substantially complete. If the Architect's inspection discloses any item, whether or not included on the Contractor's list, which is not sufficiently complete in accordance with the Contract Documents so that the Owner can occupy or utilize the Work or designated portion thereof for its intended use, the Contractor shall, before issuance of the Certificate of Substantial Completion, complete or correct such item upon notification by the Architect. In such case, the Contractor shall then submit a request for another inspection by the Architect to determine Substantial Completion.

Init.
/
AIA Document A201™ – 2007. Copyright © 1911, 1915, 1918, 1925, 1937, 1951, 1958, 1961, 1963, 1966, 1970, 1976, 1987, 1997 and 2007 by The American Institute of Architects. All rights reserved. WARNING: This AIA® Document is protected by U.S. Copyright Law and International Treaties. Unauthorized reproduction or distribution of this AIA® Document, or any portion of it, may result in severe civil and criminal penalties, and will be prosecuted to the maximum extent possible under the law. This document was produced by AIA software at 11:33:29 on 07/22/2010 under Order No.1410090278_1 which expires on 01/22/2011, and is not for resale.
User Notes:
(1769226833)

§ 9.8.4 When the Work or designated portion thereof is substantially complete, the Architect will prepare a Certificate of Substantial Completion that shall establish the date of Substantial Completion, shall establish responsibilities of the Owner and Contractor for security, maintenance, heat, utilities, damage to the Work and insurance, and shall fix the time within which the Contractor shall finish all items on the list accompanying the Certificate. Warranties required by the Contract Documents shall commence on the date of Substantial Completion of the Work or designated portion thereof unless otherwise provided in the Certificate of Substantial Completion.

§ 9.8.5 The Certificate of Substantial Completion shall be submitted to the Owner and Contractor for their written acceptance of responsibilities assigned to them in such Certificate. Upon such acceptance and consent of surety, if any, the Owner shall make payment of retainage applying to such Work or designated portion thereof. Such payment shall be adjusted for Work that is incomplete or not in accordance with the requirements of the Contract Documents.

§ 9.9 PARTIAL OCCUPANCY OR USE

§ 9.9.1 The Owner may occupy or use any completed or partially completed portion of the Work at any stage when such portion is designated by separate agreement with the Contractor, provided such occupancy or use is consented to by the insurer as required under Section 11.3.1.5 and authorized by public authorities having jurisdiction over the Project. Such partial occupancy or use may commence whether or not the portion is substantially complete, provided the Owner and Contractor have accepted in writing the responsibilities assigned to each of them for payments, retainage, if any, security, maintenance, heat, utilities, damage to the Work and insurance, and have agreed in writing concerning the period for correction of the Work and commencement of warranties required by the Contract Documents. When the Contractor considers a portion substantially complete, the Contractor shall prepare and submit a list to the Architect as provided under Section 9.8.2. Consent of the Contractor to partial occupancy or use shall not be unreasonably withheld. The stage of the progress of the Work shall be determined by written agreement between the Owner and Contractor or, if no agreement is reached, by decision of the Architect.

§ 9.9.2 Immediately prior to such partial occupancy or use, the Owner, Contractor and Architect shall jointly inspect the area to be occupied or portion of the Work to be used in order to determine and record the condition of the Work.

§ 9.9.3 Unless otherwise agreed upon, partial occupancy or use of a portion or portions of the Work shall not constitute acceptance of Work not complying with the requirements of the Contract Documents.

§ 9.10 FINAL COMPLETION AND FINAL PAYMENT

§ 9.10.1 Upon receipt of the Contractor's written notice that the Work is ready for final inspection and acceptance and upon receipt of a final Application for Payment, the Architect will promptly make such inspection and, when the Architect finds the Work acceptable under the Contract Documents and the Contract fully performed, the Architect will promptly issue a final Certificate for Payment stating that to the best of the Architect's knowledge, information and belief, and on the basis of the Architect's on-site visits and inspections, the Work has been completed in accordance with terms and conditions of the Contract Documents and that the entire balance found to be due the Contractor and noted in the final Certificate is due and payable. The Architect's final Certificate for Payment will constitute a further representation that conditions listed in Section 9.10.2 as precedent to the Contractor's being entitled to final payment have been fulfilled.

§ 9.10.2 Neither final payment nor any remaining retained percentage shall become due until the Contractor submits to the Architect (1) an affidavit that payrolls, bills for materials and equipment, and other indebtedness connected with the Work for which the Owner or the Owner's property might be responsible or encumbered (less amounts withheld by Owner) have been paid or otherwise satisfied, (2) a certificate evidencing that insurance required by the Contract Documents to remain in force after final payment is currently in effect and will not be canceled or allowed to expire until at least 30 days' prior written notice has been given to the Owner, (3) a written statement that the Contractor knows of no substantial reason that the insurance will not be renewable to cover the period required by the Contract Documents, (4) consent of surety, if any, to final payment and (5), if required by the Owner, other data establishing payment or satisfaction of obligations, such as receipts, releases and waivers of liens, claims, security interests or encumbrances arising out of the Contract, to the extent and in such form as may be designated by the Owner. If a Subcontractor refuses to furnish a release or waiver required by the Owner, the Contractor may furnish a bond satisfactory to the Owner to indemnify the Owner against such lien. If such lien remains unsatisfied after payments are made, the Contractor shall refund to the Owner all money that the Owner may be compelled to pay in discharging such lien, including all costs and reasonable attorneys' fees.

AIA Document A201™ – 2007. Copyright © 1911, 1915, 1918, 1925, 1937, 1951, 1958, 1961, 1963, 1966, 1970, 1976, 1987, 1997 and 2007 by The American Institute of Architects. All rights reserved. WARNING: This AIA® Document is protected by U.S. Copyright Law and International Treaties. Unauthorized reproduction or distribution of this AIA® Document, or any portion of it, may result in severe civil and criminal penalties, and will be prosecuted to the maximum extent possible under the law. This document was produced by AIA software at 11:33:29 on 07/22/2010 under Order No.1410090278_1 which expires on 01/22/2011, and is not for resale.
User Notes:

(1769226833)

§ 9.10.3 If, after Substantial Completion of the Work, final completion thereof is materially delayed through no fault of the Contractor or by issuance of Change Orders affecting final completion, and the Architect so confirms, the Owner shall, upon application by the Contractor and certification by the Architect, and without terminating the Contract, make payment of the balance due for that portion of the Work fully completed and accepted. If the remaining balance for Work not fully completed or corrected is less than retainage stipulated in the Contract Documents, and if bonds have been furnished, the written consent of surety to payment of the balance due for that portion of the Work fully completed and accepted shall be submitted by the Contractor to the Architect prior to certification of such payment. Such payment shall be made under terms and conditions governing final payment, except that it shall not constitute a waiver of claims.

§ 9.10.4 The making of final payment shall constitute a waiver of Claims by the Owner except those arising from

.1 liens, Claims, security interests or encumbrances arising out of the Contract and unsettled;
.2 failure of the Work to comply with the requirements of the Contract Documents; or
.3 terms of special warranties required by the Contract Documents.

§ 9.10.5 Acceptance of final payment by the Contractor, a Subcontractor or material supplier shall constitute a waiver of claims by that payee except those previously made in writing and identified by that payee as unsettled at the time of final Application for Payment.

ARTICLE 10 PROTECTION OF PERSONS AND PROPERTY

§ 10.1 SAFETY PRECAUTIONS AND PROGRAMS

The Contractor shall be responsible for initiating, maintaining and supervising all safety precautions and programs in connection with the performance of the Contract.

§ 10.2 SAFETY OF PERSONS AND PROPERTY

§ 10.2.1 The Contractor shall take reasonable precautions for safety of, and shall provide reasonable protection to prevent damage, injury or loss to

.1 employees on the Work and other persons who may be affected thereby;
.2 the Work and materials and equipment to be incorporated therein, whether in storage on or off the site, under care, custody or control of the Contractor or the Contractor's Subcontractors or Sub-subcontractors; and
.3 other property at the site or adjacent thereto, such as trees, shrubs, lawns, walks, pavements, roadways, structures and utilities not designated for removal, relocation or replacement in the course of construction.

§ 10.2.2 The Contractor shall comply with and give notices required by applicable laws, statutes, ordinances, codes, rules and regulations, and lawful orders of public authorities bearing on safety of persons or property or their protection from damage, injury or loss.

§ 10.2.3 The Contractor shall erect and maintain, as required by existing conditions and performance of the Contract, reasonable safeguards for safety and protection, including posting danger signs and other warnings against hazards, promulgating safety regulations and notifying owners and users of adjacent sites and utilities.

§ 10.2.4 When use or storage of explosives or other hazardous materials or equipment or unusual methods are necessary for execution of the Work, the Contractor shall exercise utmost care and carry on such activities under supervision of properly qualified personnel.

§ 10.2.5 The Contractor shall promptly remedy damage and loss (other than damage or loss insured under property insurance required by the Contract Documents) to property referred to in Sections 10.2.1.2 and 10.2.1.3 caused in whole or in part by the Contractor, a Subcontractor, a Sub-subcontractor, or anyone directly or indirectly employed by any of them, or by anyone for whose acts they may be liable and for which the Contractor is responsible under Sections 10.2.1.2 and 10.2.1.3, except damage or loss attributable to acts or omissions of the Owner or Architect or anyone directly or indirectly employed by either of them, or by anyone for whose acts either of them may be liable, and not attributable to the fault or negligence of the Contractor. The foregoing obligations of the Contractor are in addition to the Contractor's obligations under Section 3.18.

AIA Document A201™ – 2007. Copyright © 1911, 1915, 1918, 1925, 1937, 1951, 1958, 1961, 1963, 1966, 1970, 1976, 1987, 1997 and 2007 by The American Institute of Architects. All rights reserved. WARNING: This AIA® Document is protected by U.S. Copyright Law and International Treaties. Unauthorized reproduction or distribution of this AIA® Document, or any portion of it, may result in severe civil and criminal penalties, and will be prosecuted to the maximum extent possible under the law. This document was produced by AIA software at 11:33:29 on 07/22/2010 under Order No.1410090278_1 which expires on 01/22/2011, and is not for resale.
User Notes:

§ 10.2.6 The Contractor shall designate a responsible member of the Contractor's organization at the site whose duty shall be the prevention of accidents. This person shall be the Contractor's superintendent unless otherwise designated by the Contractor in writing to the Owner and Architect.

§ 10.2.7 The Contractor shall not permit any part of the construction or site to be loaded so as to cause damage or create an unsafe condition.

§ 10.2.8 INJURY OR DAMAGE TO PERSON OR PROPERTY
If either party suffers injury or damage to person or property because of an act or omission of the other party, or of others for whose acts such party is legally responsible, written notice of such injury or damage, whether or not insured, shall be given to the other party within a reasonable time not exceeding 21 days after discovery. The notice shall provide sufficient detail to enable the other party to investigate the matter.

§ 10.3 HAZARDOUS MATERIALS
§ 10.3.1 The Contractor is responsible for compliance with any requirements included in the Contract Documents regarding hazardous materials. If the Contractor encounters a hazardous material or substance not addressed in the Contract Documents and if reasonable precautions will be inadequate to prevent foreseeable bodily injury or death to persons resulting from a material or substance, including but not limited to asbestos or polychlorinated biphenyl (PCB), encountered on the site by the Contractor, the Contractor shall, upon recognizing the condition, immediately stop Work in the affected area and report the condition to the Owner and Architect in writing.

§ 10.3.2 Upon receipt of the Contractor's written notice, the Owner shall obtain the services of a licensed laboratory to verify the presence or absence of the material or substance reported by the Contractor and, in the event such material or substance is found to be present, to cause it to be rendered harmless. Unless otherwise required by the Contract Documents, the Owner shall furnish in writing to the Contractor and Architect the names and qualifications of persons or entities who are to perform tests verifying the presence or absence of such material or substance or who are to perform the task of removal or safe containment of such material or substance. The Contractor and the Architect will promptly reply to the Owner in writing stating whether or not either has reasonable objection to the persons or entities proposed by the Owner. If either the Contractor or Architect has an objection to a person or entity proposed by the Owner, the Owner shall propose another to whom the Contractor and the Architect have no reasonable objection. When the material or substance has been rendered harmless, Work in the affected area shall resume upon written agreement of the Owner and Contractor. By Change Order, the Contract Time shall be extended appropriately and the Contract Sum shall be increased in the amount of the Contractor's reasonable additional costs of shut-down, delay and start-up.

§ 10.3.3 To the fullest extent permitted by law, the Owner shall indemnify and hold harmless the Contractor, Subcontractors, Architect, Architect's consultants and agents and employees of any of them from and against claims, damages, losses and expenses, including but not limited to attorneys' fees, arising out of or resulting from performance of the Work in the affected area if in fact the material or substance presents the risk of bodily injury or death as described in Section 10.3.1 and has not been rendered harmless, provided that such claim, damage, loss or expense is attributable to bodily injury, sickness, disease or death, or to injury to or destruction of tangible property (other than the Work itself), except to the extent that such damage, loss or expense is due to the fault or negligence of the party seeking indemnity.

§ 10.3.4 The Owner shall not be responsible under this Section 10.3 for materials or substances the Contractor brings to the site unless such materials or substances are required by the Contract Documents. The Owner shall be responsible for materials or substances required by the Contract Documents, except to the extent of the Contractor's fault or negligence in the use and handling of such materials or substances.

§ 10.3.5 The Contractor shall indemnify the Owner for the cost and expense the Owner incurs (1) for remediation of a material or substance the Contractor brings to the site and negligently handles, or (2) where the Contractor fails to perform its obligations under Section 10.3.1, except to the extent that the cost and expense are due to the Owner's fault or negligence.

§ 10.3.6 If, without negligence on the part of the Contractor, the Contractor is held liable by a government agency for the cost of remediation of a hazardous material or substance solely by reason of performing Work as required by the Contract Documents, the Owner shall indemnify the Contractor for all cost and expense thereby incurred.

AIA Document A201™ – 2007. Copyright © 1911, 1915, 1918, 1925, 1937, 1951, 1958, 1961, 1963, 1966, 1970, 1976, 1987, 1997 and 2007 by The American Institute of Architects. All rights reserved. WARNING: This AIA® Document is protected by U.S. Copyright Law and International Treaties. Unauthorized reproduction or distribution of this AIA® Document, or any portion of it, may result in severe civil and criminal penalties, and will be prosecuted to the maximum extent possible under the law. This document was produced by AIA software at 11:33:29 on 07/22/2010 under Order No.1410090278_1 which expires on 01/22/2011, and is not for resale.
User Notes:

§ 10.4 EMERGENCIES

In an emergency affecting safety of persons or property, the Contractor shall act, at the Contractor's discretion, to prevent threatened damage, injury or loss. Additional compensation or extension of time claimed by the Contractor on account of an emergency shall be determined as provided in Article 15 and Article 7.

ARTICLE 11 INSURANCE AND BONDS

§ 11.1 CONTRACTOR'S LIABILITY INSURANCE

§ 11.1.1 The Contractor shall purchase from and maintain in a company or companies lawfully authorized to do business in the jurisdiction in which the Project is located such insurance as will protect the Contractor from claims set forth below which may arise out of or result from the Contractor's operations and completed operations under the Contract and for which the Contractor may be legally liable, whether such operations be by the Contractor or by a Subcontractor or by anyone directly or indirectly employed by any of them, or by anyone for whose acts any of them may be liable:

- **.1** Claims under workers' compensation, disability benefit and other similar employee benefit acts that are applicable to the Work to be performed;
- **.2** Claims for damages because of bodily injury, occupational sickness or disease, or death of the Contractor's employees;
- **.3** Claims for damages because of bodily injury, sickness or disease, or death of any person other than the Contractor's employees;
- **.4** Claims for damages insured by usual personal injury liability coverage;
- **.5** Claims for damages, other than to the Work itself, because of injury to or destruction of tangible property, including loss of use resulting therefrom;
- **.6** Claims for damages because of bodily injury, death of a person or property damage arising out of ownership, maintenance or use of a motor vehicle;
- **.7** Claims for bodily injury or property damage arising out of completed operations; and
- **.8** Claims involving contractual liability insurance applicable to the Contractor's obligations under Section 3.18.

§ 11.1.2 The insurance required by Section 11.1.1 shall be written for not less than limits of liability specified in the Contract Documents or required by law, whichever coverage is greater. Coverages, whether written on an occurrence or claims-made basis, shall be maintained without interruption from the date of commencement of the Work until the date of final payment and termination of any coverage required to be maintained after final payment, and, with respect to the Contractor's completed operations coverage, until the expiration of the period for correction of Work or for such other period for maintenance of completed operations coverage as specified in the Contract Documents.

§ 11.1.3 Certificates of insurance acceptable to the Owner shall be filed with the Owner prior to commencement of the Work and thereafter upon renewal or replacement of each required policy of insurance. These certificates and the insurance policies required by this Section 11.1 shall contain a provision that coverages afforded under the policies will not be canceled or allowed to expire until at least 30 days' prior written notice has been given to the Owner. An additional certificate evidencing continuation of liability coverage, including coverage for completed operations, shall be submitted with the final Application for Payment as required by Section 9.10.2 and thereafter upon renewal or replacement of such coverage until the expiration of the time required by Section 11.1.2. Information concerning reduction of coverage on account of revised limits or claims paid under the General Aggregate, or both, shall be furnished by the Contractor with reasonable promptness.

§ 11.1.4 The Contractor shall cause the commercial liability coverage required by the Contract Documents to include (1) the Owner, the Architect and the Architect's Consultants as additional insureds for claims caused in whole or in part by the Contractor's negligent acts or omissions during the Contractor's operations; and (2) the Owner as an additional insured for claims caused in whole or in part by the Contractor's negligent acts or omissions during the Contractor's completed operations.

§ 11.2 OWNER'S LIABILITY INSURANCE

The Owner shall be responsible for purchasing and maintaining the Owner's usual liability insurance.

AIA Document A201™ – 2007. Copyright © 1911, 1915, 1918, 1925, 1937, 1951, 1958, 1961, 1963, 1966, 1970, 1976, 1987, 1997 and 2007 by The American Institute of Architects. All rights reserved. WARNING: This AIA® Document is protected by U.S. Copyright Law and International Treaties. Unauthorized reproduction or distribution of this AIA® Document, or any portion of it, may result in severe civil and criminal penalties, and will be prosecuted to the maximum extent possible under the law. This document was produced by AIA software at 11:33:29 on 07/22/2010 under Order No.1410090278_1 which expires on 01/22/2011, and is not for resale.
User Notes:

(1769226833)

§ 11.3 PROPERTY INSURANCE

§ 11.3.1 Unless otherwise provided, the Owner shall purchase and maintain, in a company or companies lawfully authorized to do business in the jurisdiction in which the Project is located, property insurance written on a builder's risk "all-risk" or equivalent policy form in the amount of the initial Contract Sum, plus value of subsequent Contract Modifications and cost of materials supplied or installed by others, comprising total value for the entire Project at the site on a replacement cost basis without optional deductibles. Such property insurance shall be maintained, unless otherwise provided in the Contract Documents or otherwise agreed in writing by all persons and entities who are beneficiaries of such insurance, until final payment has been made as provided in Section 9.10 or until no person or entity other than the Owner has an insurable interest in the property required by this Section 11.3 to be covered, whichever is later. This insurance shall include interests of the Owner, the Contractor, Subcontractors and Sub-subcontractors in the Project.

§ 11.3.1.1 Property insurance shall be on an "all-risk" or equivalent policy form and shall include, without limitation, insurance against the perils of fire (with extended coverage) and physical loss or damage including, without duplication of coverage, theft, vandalism, malicious mischief, collapse, earthquake, flood, windstorm, falsework, testing and startup, temporary buildings and debris removal including demolition occasioned by enforcement of any applicable legal requirements, and shall cover reasonable compensation for Architect's and Contractor's services and expenses required as a result of such insured loss.

§ 11.3.1.2 If the Owner does not intend to purchase such property insurance required by the Contract and with all of the coverages in the amount described above, the Owner shall so inform the Contractor in writing prior to commencement of the Work. The Contractor may then effect insurance that will protect the interests of the Contractor, Subcontractors and Sub-subcontractors in the Work, and by appropriate Change Order the cost thereof shall be charged to the Owner. If the Contractor is damaged by the failure or neglect of the Owner to purchase or maintain insurance as described above, without so notifying the Contractor in writing, then the Owner shall bear all reasonable costs properly attributable thereto.

§ 11.3.1.3 If the property insurance requires deductibles, the Owner shall pay costs not covered because of such deductibles.

§ 11.3.1.4 This property insurance shall cover portions of the Work stored off the site, and also portions of the Work in transit.

§ 11.3.1.5 Partial occupancy or use in accordance with Section 9.9 shall not commence until the insurance company or companies providing property insurance have consented to such partial occupancy or use by endorsement or otherwise. The Owner and the Contractor shall take reasonable steps to obtain consent of the insurance company or companies and shall, without mutual written consent, take no action with respect to partial occupancy or use that would cause cancellation, lapse or reduction of insurance.

§ 11.3.2 BOILER AND MACHINERY INSURANCE

The Owner shall purchase and maintain boiler and machinery insurance required by the Contract Documents or by law, which shall specifically cover such insured objects during installation and until final acceptance by the Owner; this insurance shall include interests of the Owner, Contractor, Subcontractors and Sub-subcontractors in the Work, and the Owner and Contractor shall be named insureds.

§ 11.3.3 LOSS OF USE INSURANCE

The Owner, at the Owner's option, may purchase and maintain such insurance as will insure the Owner against loss of use of the Owner's property due to fire or other hazards, however caused. The Owner waives all rights of action against the Contractor for loss of use of the Owner's property, including consequential losses due to fire or other hazards however caused.

§ 11.3.4 If the Contractor requests in writing that insurance for risks other than those described herein or other special causes of loss be included in the property insurance policy, the Owner shall, if possible, include such insurance, and the cost thereof shall be charged to the Contractor by appropriate Change Order.

§ 11.3.5 If during the Project construction period the Owner insures properties, real or personal or both, at or adjacent to the site by property insurance under policies separate from those insuring the Project, or if after final payment

AIA Document A201™ – 2007. Copyright © 1911, 1915, 1918, 1925, 1937, 1951, 1958, 1961, 1963, 1966, 1970, 1976, 1987, 1997 and 2007 by The American Institute of Architects. All rights reserved. WARNING: This AIA® Document is protected by U.S. Copyright Law and International Treaties. Unauthorized reproduction or distribution of this AIA® Document, or any portion of it, may result in severe civil and criminal penalties, and will be prosecuted to the maximum extent possible under the law. This document was produced by AIA software at 11:33:29 on 07/22/2010 under Order No.1410090278_1 which expires on 01/22/2011, and is not for resale.
User Notes:

property insurance is to be provided on the completed Project through a policy or policies other than those insuring the Project during the construction period, the Owner shall waive all rights in accordance with the terms of Section 11.3.7 for damages caused by fire or other causes of loss covered by this separate property insurance. All separate policies shall provide this waiver of subrogation by endorsement or otherwise.

§ 11.3.6 Before an exposure to loss may occur, the Owner shall file with the Contractor a copy of each policy that includes insurance coverages required by this Section 11.3. Each policy shall contain all generally applicable conditions, definitions, exclusions and endorsements related to this Project. Each policy shall contain a provision that the policy will not be canceled or allowed to expire, and that its limits will not be reduced, until at least 30 days' prior written notice has been given to the Contractor.

§ 11.3.7 WAIVERS OF SUBROGATION

The Owner and Contractor waive all rights against (1) each other and any of their subcontractors, sub-subcontractors, agents and employees, each of the other, and (2) the Architect, Architect's consultants, separate contractors described in Article 6, if any, and any of their subcontractors, sub-subcontractors, agents and employees, for damages caused by fire or other causes of loss to the extent covered by property insurance obtained pursuant to this Section 11.3 or other property insurance applicable to the Work, except such rights as they have to proceeds of such insurance held by the Owner as fiduciary. The Owner or Contractor, as appropriate, shall require of the Architect, Architect's consultants, separate contractors described in Article 6, if any, and the subcontractors, sub-subcontractors, agents and employees of any of them, by appropriate agreements, written where legally required for validity, similar waivers each in favor of other parties enumerated herein. The policies shall provide such waivers of subrogation by endorsement or otherwise. A waiver of subrogation shall be effective as to a person or entity even though that person or entity would otherwise have a duty of indemnification, contractual or otherwise, did not pay the insurance premium directly or indirectly, and whether or not the person or entity had an insurable interest in the property damaged.

§ 11.3.8 A loss insured under the Owner's property insurance shall be adjusted by the Owner as fiduciary and made payable to the Owner as fiduciary for the insureds, as their interests may appear, subject to requirements of any applicable mortgagee clause and of Section 11.3.10. The Contractor shall pay Subcontractors their just shares of insurance proceeds received by the Contractor, and by appropriate agreements, written where legally required for validity, shall require Subcontractors to make payments to their Sub-subcontractors in similar manner.

§ 11.3.9 If required in writing by a party in interest, the Owner as fiduciary shall, upon occurrence of an insured loss, give bond for proper performance of the Owner's duties. The cost of required bonds shall be charged against proceeds received as fiduciary. The Owner shall deposit in a separate account proceeds so received, which the Owner shall distribute in accordance with such agreement as the parties in interest may reach, or as determined in accordance with the method of binding dispute resolution selected in the Agreement between the Owner and Contractor. If after such loss no other special agreement is made and unless the Owner terminates the Contract for convenience, replacement of damaged property shall be performed by the Contractor after notification of a Change in the Work in accordance with Article 7.

§ 11.3.10 The Owner as fiduciary shall have power to adjust and settle a loss with insurers unless one of the parties in interest shall object in writing within five days after occurrence of loss to the Owner's exercise of this power; if such objection is made, the dispute shall be resolved in the manner selected by the Owner and Contractor as the method of binding dispute resolution in the Agreement. If the Owner and Contractor have selected arbitration as the method of binding dispute resolution, the Owner as fiduciary shall make settlement with insurers or, in the case of a dispute over distribution of insurance proceeds, in accordance with the directions of the arbitrators.

§ 11.4 PERFORMANCE BOND AND PAYMENT BOND

§ 11.4.1 The Owner shall have the right to require the Contractor to furnish bonds covering faithful performance of the Contract and payment of obligations arising thereunder as stipulated in bidding requirements or specifically required in the Contract Documents on the date of execution of the Contract.

§ 11.4.2 Upon the request of any person or entity appearing to be a potential beneficiary of bonds covering payment of obligations arising under the Contract, the Contractor shall promptly furnish a copy of the bonds or shall authorize a copy to be furnished.

Init.
/
AIA Document A201™ – 2007. Copyright © 1911, 1915, 1918, 1925, 1937, 1951, 1958, 1961, 1963, 1966, 1970, 1976, 1987, 1997 and 2007 by The American Institute of Architects. **All rights reserved.** WARNING: This AIA® Document is protected by U.S. Copyright Law and International Treaties. Unauthorized reproduction or distribution of this AIA® Document, or any portion of it, may result in severe civil and criminal penalties, and will be prosecuted to the maximum extent possible under the law. This document was produced by AIA software at 11:33:29 on 07/22/2010 under Order No.1410090278_1 which expires on 01/22/2011, and is not for resale.
User Notes:
(1769226833)

ARTICLE 12 UNCOVERING AND CORRECTION OF WORK

§ 12.1 UNCOVERING OF WORK

§ 12.1.1 If a portion of the Work is covered contrary to the Architect's request or to requirements specifically expressed in the Contract Documents, it must, if requested in writing by the Architect, be uncovered for the Architect's examination and be replaced at the Contractor's expense without change in the Contract Time.

§ 12.1.2 If a portion of the Work has been covered that the Architect has not specifically requested to examine prior to its being covered, the Architect may request to see such Work and it shall be uncovered by the Contractor. If such Work is in accordance with the Contract Documents, costs of uncovering and replacement shall, by appropriate Change Order, be at the Owner's expense. If such Work is not in accordance with the Contract Documents, such costs and the cost of correction shall be at the Contractor's expense unless the condition was caused by the Owner or a separate contractor in which event the Owner shall be responsible for payment of such costs.

§ 12.2 CORRECTION OF WORK

§ 12.2.1 BEFORE OR AFTER SUBSTANTIAL COMPLETION

The Contractor shall promptly correct Work rejected by the Architect or failing to conform to the requirements of the Contract Documents, whether discovered before or after Substantial Completion and whether or not fabricated, installed or completed. Costs of correcting such rejected Work, including additional testing and inspections, the cost of uncovering and replacement, and compensation for the Architect's services and expenses made necessary thereby, shall be at the Contractor's expense.

§ 12.2.2 AFTER SUBSTANTIAL COMPLETION

§ 12.2.2.1 In addition to the Contractor's obligations under Section 3.5, if, within one year after the date of Substantial Completion of the Work or designated portion thereof or after the date for commencement of warranties established under Section 9.9.1, or by terms of an applicable special warranty required by the Contract Documents, any of the Work is found to be not in accordance with the requirements of the Contract Documents, the Contractor shall correct it promptly after receipt of written notice from the Owner to do so unless the Owner has previously given the Contractor a written acceptance of such condition. The Owner shall give such notice promptly after discovery of the condition. During the one-year period for correction of Work, if the Owner fails to notify the Contractor and give the Contractor an opportunity to make the correction, the Owner waives the rights to require correction by the Contractor and to make a claim for breach of warranty. If the Contractor fails to correct nonconforming Work within a reasonable time during that period after receipt of notice from the Owner or Architect, the Owner may correct it in accordance with Section 2.4.

§ 12.2.2.2 The one-year period for correction of Work shall be extended with respect to portions of Work first performed after Substantial Completion by the period of time between Substantial Completion and the actual completion of that portion of the Work.

§ 12.2.2.3 The one-year period for correction of Work shall not be extended by corrective Work performed by the Contractor pursuant to this Section 12.2.

§ 12.2.3 The Contractor shall remove from the site portions of the Work that are not in accordance with the requirements of the Contract Documents and are neither corrected by the Contractor nor accepted by the Owner.

§ 12.2.4 The Contractor shall bear the cost of correcting destroyed or damaged construction, whether completed or partially completed, of the Owner or separate contractors caused by the Contractor's correction or removal of Work that is not in accordance with the requirements of the Contract Documents.

§ 12.2.5 Nothing contained in this Section 12.2 shall be construed to establish a period of limitation with respect to other obligations the Contractor has under the Contract Documents. Establishment of the one-year period for correction of Work as described in Section 12.2.2 relates only to the specific obligation of the Contractor to correct the Work, and has no relationship to the time within which the obligation to comply with the Contract Documents may be sought to be enforced, nor to the time within which proceedings may be commenced to establish the Contractor's liability with respect to the Contractor's obligations other than specifically to correct the Work.

Init.
/
AIA Document A201™ – 2007. Copyright © 1911, 1915, 1918, 1925, 1937, 1951, 1958, 1961, 1963, 1966, 1970, 1976, 1987, 1997 and 2007 by The American Institute of Architects. All rights reserved. WARNING: This AIA® Document is protected by U.S. Copyright Law and International Treaties. Unauthorized reproduction or distribution of this AIA® Document, or any portion of it, may result in severe civil and criminal penalties, and will be prosecuted to the maximum extent possible under the law. This document was produced by AIA software at 11:33:29 on 07/22/2010 under Order No.1410090278_1 which expires on 01/22/2011, and is not for resale.
User Notes:
(1769226833)

§ 12.3 ACCEPTANCE OF NONCONFORMING WORK

If the Owner prefers to accept Work that is not in accordance with the requirements of the Contract Documents, the Owner may do so instead of requiring its removal and correction, in which case the Contract Sum will be reduced as appropriate and equitable. Such adjustment shall be effected whether or not final payment has been made.

ARTICLE 13 MISCELLANEOUS PROVISIONS

§ 13.1 GOVERNING LAW

The Contract shall be governed by the law of the place where the Project is located except that, if the parties have selected arbitration as the method of binding dispute resolution, the Federal Arbitration Act shall govern Section 15.4.

§ 13.2 SUCCESSORS AND ASSIGNS

§ 13.2.1 The Owner and Contractor respectively bind themselves, their partners, successors, assigns and legal representatives to covenants, agreements and obligations contained in the Contract Documents. Except as provided in Section 13.2.2, neither party to the Contract shall assign the Contract as a whole without written consent of the other. If either party attempts to make such an assignment without such consent, that party shall nevertheless remain legally responsible for all obligations under the Contract.

§ 13.2.2 The Owner may, without consent of the Contractor, assign the Contract to a lender providing construction financing for the Project, if the lender assumes the Owner's rights and obligations under the Contract Documents. The Contractor shall execute all consents reasonably required to facilitate such assignment.

§ 13.3 WRITTEN NOTICE

Written notice shall be deemed to have been duly served if delivered in person to the individual, to a member of the firm or entity, or to an officer of the corporation for which it was intended; or if delivered at, or sent by registered or certified mail or by courier service providing proof of delivery to, the last business address known to the party giving notice.

§ 13.4 RIGHTS AND REMEDIES

§ 13.4.1 Duties and obligations imposed by the Contract Documents and rights and remedies available thereunder shall be in addition to and not a limitation of duties, obligations, rights and remedies otherwise imposed or available by law.

§ 13.4.2 No action or failure to act by the Owner, Architect or Contractor shall constitute a waiver of a right or duty afforded them under the Contract, nor shall such action or failure to act constitute approval of or acquiescence in a breach there under, except as may be specifically agreed in writing.

§ 13.5 TESTS AND INSPECTIONS

§ 13.5.1 Tests, inspections and approvals of portions of the Work shall be made as required by the Contract Documents and by applicable laws, statutes, ordinances, codes, rules and regulations or lawful orders of public authorities. Unless otherwise provided, the Contractor shall make arrangements for such tests, inspections and approvals with an independent testing laboratory or entity acceptable to the Owner, or with the appropriate public authority, and shall bear all related costs of tests, inspections and approvals. The Contractor shall give the Architect timely notice of when and where tests and inspections are to be made so that the Architect may be present for such procedures. The Owner shall bear costs of (1) tests, inspections or approvals that do not become requirements until after bids are received or negotiations concluded, and (2) tests, inspections or approvals where building codes or applicable laws or regulations prohibit the Owner from delegating their cost to the Contractor.

§ 13.5.2 If the Architect, Owner or public authorities having jurisdiction determine that portions of the Work require additional testing, inspection or approval not included under Section 13.5.1, the Architect will, upon written authorization from the Owner, instruct the Contractor to make arrangements for such additional testing, inspection or approval by an entity acceptable to the Owner, and the Contractor shall give timely notice to the Architect of when and where tests and inspections are to be made so that the Architect may be present for such procedures. Such costs, except as provided in Section 13.5.3, shall be at the Owner's expense.

§ 13.5.3 If such procedures for testing, inspection or approval under Sections 13.5.1 and 13.5.2 reveal failure of the portions of the Work to comply with requirements established by the Contract Documents, all costs made necessary by

AIA Document A201™ – 2007. Copyright © 1911, 1915, 1918, 1925, 1937, 1951, 1958, 1961, 1963, 1966, 1970, 1976, 1987, 1997 and 2007 by The American Institute of Architects. All rights reserved. WARNING: This AIA® Document is protected by U.S. Copyright Law and International Treaties. Unauthorized reproduction or distribution of this AIA® Document, or any portion of it, may result in severe civil and criminal penalties, and will be prosecuted to the maximum extent possible under the law. This document was produced by AIA software at 11:33:29 on 07/22/2010 under Order No.1410090278_1 which expires on 01/22/2011, and is not for resale.
User Notes:

(1769226833)

such failure including those of repeated procedures and compensation for the Architect's services and expenses shall be at the Contractor's expense.

§ 13.5.4 Required certificates of testing, inspection or approval shall, unless otherwise required by the Contract Documents, be secured by the Contractor and promptly delivered to the Architect.

§ 13.5.5 If the Architect is to observe tests, inspections or approvals required by the Contract Documents, the Architect will do so promptly and, where practicable, at the normal place of testing.

§ 13.5.6 Tests or inspections conducted pursuant to the Contract Documents shall be made promptly to avoid unreasonable delay in the Work.

§ 13.6 INTEREST

Payments due and unpaid under the Contract Documents shall bear interest from the date payment is due at such rate as the parties may agree upon in writing or, in the absence thereof, at the legal rate prevailing from time to time at the place where the Project is located.

§ 13.7 TIME LIMITS ON CLAIMS

The Owner and Contractor shall commence all claims and causes of action, whether in contract, tort, breach of warranty or otherwise, against the other arising out of or related to the Contract in accordance with the requirements of the final dispute resolution method selected in the Agreement within the time period specified by applicable law, but in any case not more than 10 years after the date of Substantial Completion of the Work. The Owner and Contractor waive all claims and causes of action not commenced in accordance with this Section 13.7.

ARTICLE 14 TERMINATION OR SUSPENSION OF THE CONTRACT

§ 14.1 TERMINATION BY THE CONTRACTOR

§ 14.1.1 The Contractor may terminate the Contract if the Work is stopped for a period of 30 consecutive days through no act or fault of the Contractor or a Subcontractor, Sub-subcontractor or their agents or employees or any other persons or entities performing portions of the Work under direct or indirect contract with the Contractor, for any of the following reasons:

- .1 Issuance of an order of a court or other public authority having jurisdiction that requires all Work to be stopped;
- .2 An act of government, such as a declaration of national emergency that requires all Work to be stopped;
- .3 Because the Architect has not issued a Certificate for Payment and has not notified the Contractor of the reason for withholding certification as provided in Section 9.4.1, or because the Owner has not made payment on a Certificate for Payment within the time stated in the Contract Documents; or
- .4 The Owner has failed to furnish to the Contractor promptly, upon the Contractor's request, reasonable evidence as required by Section 2.2.1.

§ 14.1.2 The Contractor may terminate the Contract if, through no act or fault of the Contractor or a Subcontractor, Sub-subcontractor or their agents or employees or any other persons or entities performing portions of the Work under direct or indirect contract with the Contractor, repeated suspensions, delays or interruptions of the entire Work by the Owner as described in Section 14.3 constitute in the aggregate more than 100 percent of the total number of days scheduled for completion, or 120 days in any 365-day period, whichever is less.

§ 14.1.3 If one of the reasons described in Section 14.1.1 or 14.1.2 exists, the Contractor may, upon seven days' written notice to the Owner and Architect, terminate the Contract and recover from the Owner payment for Work executed, including reasonable overhead and profit, costs incurred by reason of such termination, and damages.

§ 14.1.4 If the Work is stopped for a period of 60 consecutive days through no act or fault of the Contractor or a Subcontractor or their agents or employees or any other persons performing portions of the Work under contract with the Contractor because the Owner has repeatedly failed to fulfill the Owner's obligations under the Contract Documents with respect to matters important to the progress of the Work, the Contractor may, upon seven additional days' written notice to the Owner and the Architect, terminate the Contract and recover from the Owner as provided in Section 14.1.3.

Init.
/
AIA Document A201™ – 2007. Copyright © 1911, 1915, 1918, 1925, 1937, 1951, 1958, 1961, 1963, 1966, 1970, 1976, 1987, 1997 and 2007 by The American Institute of Architects. All rights reserved. WARNING: This AIA® Document is protected by U.S. Copyright Law and International Treaties. Unauthorized reproduction or distribution of this AIA® Document, or any portion of it, may result in severe civil and criminal penalties, and will be prosecuted to the maximum extent possible under the law. This document was produced by AIA software at 11:33:29 on 07/22/2010 under Order No.1410090278_1 which expires on 01/22/2011, and is not for resale.
User Notes:
(1769226833)

§ 14.2 TERMINATION BY THE OWNER FOR CAUSE

§ 14.2.1 The Owner may terminate the Contract if the Contractor

- .1 repeatedly refuses or fails to supply enough properly skilled workers or proper materials;
- .2 fails to make payment to Subcontractors for materials or labor in accordance with the respective agreements between the Contractor and the Subcontractors;
- .3 repeatedly disregards applicable laws, statutes, ordinances, codes, rules and regulations, or lawful orders of a public authority; or
- .4 otherwise is guilty of substantial breach of a provision of the Contract Documents.

§ 14.2.2 When any of the above reasons exist, the Owner, upon certification by the Initial Decision Maker that sufficient cause exists to justify such action, may without prejudice to any other rights or remedies of the Owner and after giving the Contractor and the Contractor's surety, if any, seven days' written notice, terminate employment of the Contractor and may, subject to any prior rights of the surety:

- .1 Exclude the Contractor from the site and take possession of all materials, equipment, tools, and construction equipment and machinery thereon owned by the Contractor;
- .2 Accept assignment of subcontracts pursuant to Section 5.4; and
- .3 Finish the Work by whatever reasonable method the Owner may deem expedient. Upon written request of the Contractor, the Owner shall furnish to the Contractor a detailed accounting of the costs incurred by the Owner in finishing the Work.

§ 14.2.3 When the Owner terminates the Contract for one of the reasons stated in Section 14.2.1, the Contractor shall not be entitled to receive further payment until the Work is finished.

§ 14.2.4 If the unpaid balance of the Contract Sum exceeds costs of finishing the Work, including compensation for the Architect's services and expenses made necessary thereby, and other damages incurred by the Owner and not expressly waived, such excess shall be paid to the Contractor. If such costs and damages exceed the unpaid balance, the Contractor shall pay the difference to the Owner. The amount to be paid to the Contractor or Owner, as the case may be, shall be certified by the Initial Decision Maker, upon application, and this obligation for payment shall survive termination of the Contract.

§ 14.3 SUSPENSION BY THE OWNER FOR CONVENIENCE

§ 14.3.1 The Owner may, without cause, order the Contractor in writing to suspend, delay or interrupt the Work in whole or in part for such period of time as the Owner may determine.

§ 14.3.2 The Contract Sum and Contract Time shall be adjusted for increases in the cost and time caused by suspension, delay or interruption as described in Section 14.3.1. Adjustment of the Contract Sum shall include profit. No adjustment shall be made to the extent

- .1 that performance is, was or would have been so suspended, delayed or interrupted by another cause for which the Contractor is responsible; or
- .2 that an equitable adjustment is made or denied under another provision of the Contract.

§ 14.4 TERMINATION BY THE OWNER FOR CONVENIENCE

§ 14.4.1 The Owner may, at any time, terminate the Contract for the Owner's convenience and without cause.

§ 14.4.2 Upon receipt of written notice from the Owner of such termination for the Owner's convenience, the Contractor shall

- .1 cease operations as directed by the Owner in the notice;
- .2 take actions necessary, or that the Owner may direct, for the protection and preservation of the Work; and
- .3 except for Work directed to be performed prior to the effective date of termination stated in the notice, terminate all existing subcontracts and purchase orders and enter into no further subcontracts and purchase orders.

§ 14.4.3 In case of such termination for the Owner's convenience, the Contractor shall be entitled to receive payment for Work executed, and costs incurred by reason of such termination, along with reasonable overhead and profit on the Work not executed.

AIA Document A201™ – 2007. Copyright © 1911, 1915, 1918, 1925, 1937, 1951, 1958, 1961, 1963, 1966, 1970, 1976, 1987, 1997 and 2007 by The American Institute of Architects. All rights reserved. WARNING: This AIA® Document is protected by U.S. Copyright Law and International Treaties. Unauthorized reproduction or distribution of this AIA® Document, or any portion of it, may result in severe civil and criminal penalties, and will be prosecuted to the maximum extent possible under the law. This document was produced by AIA software at 11:33:29 on 07/22/2010 under Order No.1410090278_1 which expires on 01/22/2011, and is not for resale.
User Notes: (1769226833)

ARTICLE 15 CLAIMS AND DISPUTES

§ 15.1 CLAIMS

§ 15.1.1 DEFINITION

A Claim is a demand or assertion by one of the parties seeking, as a matter of right, payment of money, or other relief with respect to the terms of the Contract. The term "Claim" also includes other disputes and matters in question between the Owner and Contractor arising out of or relating to the Contract. The responsibility to substantiate Claims shall rest with the party making the Claim.

§ 15.1.2 NOTICE OF CLAIMS

Claims by either the Owner or Contractor must be initiated by written notice to the other party and to the Initial Decision Maker with a copy sent to the Architect, if the Architect is not serving as the Initial Decision Maker. Claims by either party must be initiated within 21 days after occurrence of the event giving rise to such Claim or within 21 days after the claimant first recognizes the condition giving rise to the Claim, whichever is later.

§ 15.1.3 CONTINUING CONTRACT PERFORMANCE

Pending final resolution of a Claim, except as otherwise agreed in writing or as provided in Section 9.7 and Article 14, the Contractor shall proceed diligently with performance of the Contract and the Owner shall continue to make payments in accordance with the Contract Documents. The Architect will prepare Change Orders and issue Certificates for Payment in accordance with the decisions of the Initial Decision Maker.

§ 15.1.4 CLAIMS FOR ADDITIONAL COST

If the Contractor wishes to make a Claim for an increase in the Contract Sum, written notice as provided herein shall be given before proceeding to execute the Work. Prior notice is not required for Claims relating to an emergency endangering life or property arising under Section 10.4.

§ 15.1.5 CLAIMS FOR ADDITIONAL TIME

§ 15.1.5.1 If the Contractor wishes to make a Claim for an increase in the Contract Time, written notice as provided herein shall be given. The Contractor's Claim shall include an estimate of cost and of probable effect of delay on progress of the Work. In the case of a continuing delay, only one Claim is necessary.

§ 15.1.5.2 If adverse weather conditions are the basis for a Claim for additional time, such Claim shall be documented by data substantiating that weather conditions were abnormal for the period of time, could not have been reasonably anticipated and had an adverse effect on the scheduled construction.

§ 15.1.6 CLAIMS FOR CONSEQUENTIAL DAMAGES

The Contractor and Owner waive Claims against each other for consequential damages arising out of or relating to this Contract. This mutual waiver includes

- .1 damages incurred by the Owner for rental expenses, for losses of use, income, profit, financing, business and reputation, and for loss of management or employee productivity or of the services of such persons; and
- .2 damages incurred by the Contractor for principal office expenses including the compensation of personnel stationed there, for losses of financing, business and reputation, and for loss of profit except anticipated profit arising directly from the Work.

This mutual waiver is applicable, without limitation, to all consequential damages due to either party's termination in accordance with Article 14. Nothing contained in this Section 15.1.6 shall be deemed to preclude an award of liquidated damages, when applicable, in accordance with the requirements of the Contract Documents.

§ 15.2 INITIAL DECISION

§ 15.2.1 Claims, excluding those arising under Sections 10.3, 10.4, 11.3.9, and 11.3.10, shall be referred to the Initial Decision Maker for initial decision. The Architect will serve as the Initial Decision Maker, unless otherwise indicated in the Agreement. Except for those Claims excluded by this Section 15.2.1, an initial decision shall be required as a condition precedent to mediation of any Claim arising prior to the date final payment is due, unless 30 days have passed after the Claim has been referred to the Initial Decision Maker with no decision having been rendered. Unless the Initial Decision Maker and all affected parties agree, the Initial Decision Maker will not decide disputes between the Contractor and persons or entities other than the Owner.

AIA Document A201™ – 2007. Copyright © 1911, 1915, 1918, 1925, 1937, 1951, 1958, 1961, 1963, 1966, 1970, 1976, 1987, 1997 and 2007 by The American Institute of Architects. All rights reserved. WARNING: This AIA® Document is protected by U.S. Copyright Law and International Treaties. Unauthorized reproduction or distribution of this AIA® Document, or any portion of it, may result in severe civil and criminal penalties, and will be prosecuted to the maximum extent possible under the law. This document was produced by AIA software at 11:33:29 on 07/22/2010 under Order No.1410090278_1 which expires on 01/22/2011, and is not for resale.
User Notes:

§ **15.2.2** The Initial Decision Maker will review Claims and within ten days of the receipt of a Claim take one or more of the following actions: (1) request additional supporting data from the claimant or a response with supporting data from the other party, (2) reject the Claim in whole or in part, (3) approve the Claim, (4) suggest a compromise, or (5) advise the parties that the Initial Decision Maker is unable to resolve the Claim if the Initial Decision Maker lacks sufficient information to evaluate the merits of the Claim or if the Initial Decision Maker concludes that, in the Initial Decision Maker's sole discretion, it would be inappropriate for the Initial Decision Maker to resolve the Claim.

§ **15.2.3** In evaluating Claims, the Initial Decision Maker may, but shall not be obligated to, consult with or seek information from either party or from persons with special knowledge or expertise who may assist the Initial Decision Maker in rendering a decision. The Initial Decision Maker may request the Owner to authorize retention of such persons at the Owner's expense.

§ **15.2.4** If the Initial Decision Maker requests a party to provide a response to a Claim or to furnish additional supporting data, such party shall respond, within ten days after receipt of such request, and shall either (1) provide a response on the requested supporting data, (2) advise the Initial Decision Maker when the response or supporting data will be furnished or (3) advise the Initial Decision Maker that no supporting data will be furnished. Upon receipt of the response or supporting data, if any, the Initial Decision Maker will either reject or approve the Claim in whole or in part.

§ **15.2.5** The Initial Decision Maker will render an initial decision approving or rejecting the Claim, or indicating that the Initial Decision Maker is unable to resolve the Claim. This initial decision shall (1) be in writing; (2) state the reasons therefor; and (3) notify the parties and the Architect, if the Architect is not serving as the Initial Decision Maker, of any change in the Contract Sum or Contract Time or both. The initial decision shall be final and binding on the parties but subject to mediation and, if the parties fail to resolve their dispute through mediation, to binding dispute resolution.

§ **15.2.6** Either party may file for mediation of an initial decision at any time, subject to the terms of Section 15.2.6.1.

§ **15.2.6.1** Either party may, within 30 days from the date of an initial decision, demand in writing that the other party file for mediation within 60 days of the initial decision. If such a demand is made and the party receiving the demand fails to file for mediation within the time required, then both parties waive their rights to mediate or pursue binding dispute resolution proceedings with respect to the initial decision.

§ **15.2.7** In the event of a Claim against the Contractor, the Owner may, but is not obligated to, notify the surety, if any, of the nature and amount of the Claim. If the Claim relates to a possibility of a Contractor's default, the Owner may, but is not obligated to, notify the surety and request the surety's assistance in resolving the controversy.

§ **15.2.8** If a Claim relates to or is the subject of a mechanic's lien, the party asserting such Claim may proceed in accordance with applicable law to comply with the lien notice or filing deadlines.

§ 15.3 MEDIATION

§ **15.3.1** Claims, disputes, or other matters in controversy arising out of or related to the Contract except those waived as provided for in Sections 9.10.4, 9.10.5, and 15.1.6 shall be subject to mediation as a condition precedent to binding dispute resolution.

§ **15.3.2** The parties shall endeavor to resolve their Claims by mediation which, unless the parties mutually agree otherwise, shall be administered by the American Arbitration Association in accordance with its Construction Industry Mediation Procedures in effect on the date of the Agreement. A request for mediation shall be made in writing, delivered to the other party to the Contract, and filed with the person or entity administering the mediation. The request may be made concurrently with the filing of binding dispute resolution proceedings but, in such event, mediation shall proceed in advance of binding dispute resolution proceedings, which shall be stayed pending mediation for a period of 60 days from the date of filing, unless stayed for a longer period by agreement of the parties or court order. If an arbitration is stayed pursuant to this Section 15.3.2, the parties may nonetheless proceed to the selection of the arbitrator(s) and agree upon a schedule for later proceedings.

Init.
/
AIA Document A201™ – 2007. Copyright © 1911, 1915, 1918, 1925, 1937, 1951, 1958, 1961, 1963, 1966, 1970, 1976, 1987, 1997 and 2007 by The American Institute of Architects. **All rights reserved.** WARNING: This AIA® Document is protected by U.S. Copyright Law and International Treaties. Unauthorized reproduction or distribution of this AIA® Document, or any portion of it, may result in severe civil and criminal penalties, and will be prosecuted to the maximum extent possible under the law. This document was produced by AIA software at 11:33:29 on 07/22/2010 under Order No.1410090278_1 which expires on 01/22/2011, and is not for resale.
User Notes:
(1769226833)

§ 15.3.3 The parties shall share the mediator's fee and any filing fees equally. The mediation shall be held in the place where the Project is located, unless another location is mutually agreed upon. Agreements reached in mediation shall be enforceable as settlement agreements in any court having jurisdiction thereof.

§ 15.4 ARBITRATION

§ 15.4.1 If the parties have selected arbitration as the method for binding dispute resolution in the Agreement, any Claim subject to, but not resolved by, mediation shall be subject to arbitration which, unless the parties mutually agree otherwise, shall be administered by the American Arbitration Association in accordance with its Construction Industry Arbitration Rules in effect on the date of the Agreement. A demand for arbitration shall be made in writing, delivered to the other party to the Contract, and filed with the person or entity administering the arbitration. The party filing a notice of demand for arbitration must assert in the demand all Claims then known to that party on which arbitration is permitted to be demanded.

§ 15.4.1.1 A demand for arbitration shall be made no earlier than concurrently with the filing of a request for mediation, but in no event shall it be made after the date when the institution of legal or equitable proceedings based on the Claim would be barred by the applicable statute of limitations. For statute of limitations purposes, receipt of a written demand for arbitration by the person or entity administering the arbitration shall constitute the institution of legal or equitable proceedings based on the Claim.

§ 15.4.2 The award rendered by the arbitrator or arbitrators shall be final, and judgment may be entered upon it in accordance with applicable law in any court having jurisdiction thereof.

§ 15.4.3 The foregoing agreement to arbitrate and other agreements to arbitrate with an additional person or entity duly consented to by parties to the Agreement shall be specifically enforceable under applicable law in any court having jurisdiction thereof.

§ 15.4.4 CONSOLIDATION OR JOINDER

§ 15.4.4.1 Either party, at its sole discretion, may consolidate an arbitration conducted under this Agreement with any other arbitration to which it is a party provided that (1) the arbitration agreement governing the other arbitration permits consolidation, (2) the arbitrations to be consolidated substantially involve common questions of law or fact, and (3) the arbitrations employ materially similar procedural rules and methods for selecting arbitrator(s).

§ 15.4.4.2 Either party, at its sole discretion, may include by joinder persons or entities substantially involved in a common question of law or fact whose presence is required if complete relief is to be accorded in arbitration, provided that the party sought to be joined consents in writing to such joinder. Consent to arbitration involving an additional person or entity shall not constitute consent to arbitration of any claim, dispute or other matter in question not described in the written consent.

§ 15.4.4.3 The Owner and Contractor grant to any person or entity made a party to an arbitration conducted under this Section 15.4, whether by joinder or consolidation, the same rights of joinder and consolidation as the Owner and Contractor under this Agreement.

AIA Document A201™ – 2007. Copyright © 1911, 1915, 1918, 1925, 1937, 1951, 1958, 1961, 1963, 1966, 1970, 1976, 1987, 1997 and 2007 by The American Institute of Architects. **All rights reserved.** WARNING: This AIA® Document is protected by U.S. Copyright Law and International Treaties. Unauthorized reproduction or distribution of this AIA® Document, or any portion of it, may result in severe civil and criminal penalties, and will be prosecuted to the maximum extent possible under the law. This document was produced by AIA software at 11:33:29 on 07/22/2010 under Order No.1410090278_1 which expires on 01/22/2011, and is not for resale.
User Notes:
(1769226833)

SECTION 008000: SUPPLEMENTARY GENERAL CONDITIONS

PART 1 GENERAL

1.1 DESCRIPTION

A. Copy of the Supplementary General Conditions is bound herein.

PART 2 PRODUCTS

NOT USED

PART 3 EXECUTION

NOT USED

END OF SECTION

SECTION 008000: SUPPLEMENTARY GENERAL CONDITIONS

The following supplementary conditions modify "General Conditions of the Contract for Construction, AIA Document A201, 2007 Edition. When a portion of the General Conditions is modified or deleted by these Supplementary Conditions, the unaltered portions of the General Conditions shall remain in effect.

ARTICLE 1 - GENERAL PROVISIONS

1.1 BASIC DEFINITIONS

Add the following to the end of subparagraph 1.1.1:

"The Contract Documents executed in accordance with subparagraph 1.5.1 shall prevail in case of an inconsistency with subsequent versions made through manipulable electronic operations involving computers."

Add the following to the General Conditions Basic Definitions:

1.1.9 The words - 'as directed,' 'as permitted,' 'as required,' or words of like effect, shall mean that the direction, permission or requirement of the Engineer is intended; and similarly, the words 'approved,' 'acceptable,' 'satisfactory,' or words of like import, shall mean approved by, or acceptable or satisfactory to the Engineer unless otherwise provided herein. The words 'necessary', 'suitable', 'equal', or words of the like import, shall mean necessary or equal in the opinion of the Engineer.

1.2 CORRELATION AND INTENT OF THE CONTRACT DOCUMENTS

1.2.1 At the end of the last sentence in last line delete "indicated" and insert "intended".

Add the following subparagraphs:

1.2.4 "Whenever a material, article or piece of equipment is referred to in the singular number in the Contract Documents, it shall be the same as referring to it in the plural. As manufactured, such materials, articles, or pieces of equipment shall be provided as required to complete the Work."

1.2.5 "Should the Drawings, Specifications or schedules disagree in themselves or with either or both of the others, the better quality or greater quantity of work or materials shall be estimated upon and unless otherwise directed in writing by the Engineer shall be performed and provided."

1.2.6 "In case of disagreement, discrepancies or contradiction between any parts of the Contract Documents or within any part of the Contract Documents, only the Engineer may interpret the intent and requirements of the Documents and decision shall be final and no additional cost will be allowed in the account if the matter is brought to the Engineer attention after 7 days prior to the receipt of the

Bids, the matter will be clarified by Bulletin Addenda."

1.2.7 "Where documents duplicate the same Work or materials under more than one contract or subcontract, such duplication shall be settled by the Engineer in writing upon request of a Contractor concerned BEFORE proposals are submitted. Any such duplications which may exist in Documents after proposals are submitted will be interpreted by the Engineer as having duplicate values in the several contract or subcontracts and proper credit to the Owner, therefore shall be made by the Contractors as the Engineer shall designate."

1.2.8 "Where reference is made to a text, standard, federal specification, manufacturer's directions, or to other publication, the latest publication published prior to the date of issuance of the Drawings shall apply, unless identified in the specification by a specific publication date."

1.2.9 "Locations, sizes, and depth of existing services (i.e., manholes, utilities, etc.) as indicated are based on records made available by the utility companies and field surveys and/or the authorities having jurisdiction. Under the work of each applicable section, examine the premises and verify visible, existing conditions prior to proposal submission and the starting of work."

1.2.10 "Drawing indication of items are generally diagrammatic. Connection and anchorage of materials, interconnection of equipment and accessories necessary to any system operation not otherwise detailed or specified shall be selected under the work of each section, subject to Engineer's approval, to suit the requirements of the items."

1.2.11 "Adhere to dimensions which may differ from scale measurements. In the absence of dimensions, or in case of doubt as to the proper measurement, consult the Engineer. Actual field dimensions where applicable shall be verified in the field prior to proceeding."

1.2.12 "Wherever in the Specifications there appears a reference to a "contractor" or the "Subcontractor", or a reference to a Contractor, installer or supplier of a particular trade, or for a particular type of Work, such reference, regardless of the language thereof, shall be deemed a reference to the Contractor. It shall not be construed as relieving the Contractor from the duty to perform all of the Work and other obligations provided for under this Contract."

1.2.13 "Sections of Division 01 - General Requirements" govern by execution of the work of all sections of the specifications.

ARTICLE 2 - OWNER

2.2 INFORMATION AND SERVICES REQUIRED OF THE OWNER

Add the following after subparagraph 2.2.2

"The Contractor shall verify the location of all utilities before starting work, which shall include contacting "Miss Utility of Delmarva" and local utility companies, 1-800-441-8355."

Delete subparagraph 2.2.5 and substitute the following:

2.2.5 The Contractor will be furnished, free of charge three (3) copies of Contract Drawings and Project Manuals. Additional sets will be furnished at the cost of reproduction, postage, and handling.

ARTICLE 3 - CONTRACTOR

3.5 WARRANTY

Add the following:

3.5.1 The warranty provided in paragraph 3.5 shall be concurrent with and not limited of any other warranty required by the Contract Documents. The Contractor shall repair or replace those products found not to be in compliance with the warranty terms during the period of two (2) years after the date of substantial completion.

3.5.2 Where phased portions are accepted as substantially complete, then one (1) year warranty shall commence for that date. Only work within the substantially complete phase shall commence warranty time period.

3.7 PERMITS, FEES, NOTICES, AND COMPLIANCE WITH LAWS

Add the following:

3.7.1.1. "The Contractor shall secure and pay for all other permits including but not limited to HVAC, and electrical permits. Costs of all permits shall be included in the Base Bid."

3.9 SUPERINTENDENT

After subparagraph 3.9.3 add the following:

3.9.4 "The Superintendent shall be satisfactory to the Engineer and Owner and upon request shall furnish them within seven (7) days his/her qualifications to supervise the project. The Superintendent shall not be changed except with the consent of the Owner, unless he proves to be unsatisfactory to the contractor and ceases to be in his employment."

3.13 USE OF SITE

Add the following:

3.13.1 The Contractor shall coordinate phasing of the project with the Owner to allow continuous use of the building and site during the construction period. Final phasing plans to be developed by the Contractor are subject to approval by the

Engineer/Owner.

3.1.2 The Contractor shall be responsible for the security of all parts of the work not accepted by the Owner, until such time as the Owner accepts said parts of the work.

3.15 CLEANING UP

Add the following to subparagraph 3.15.1:

3.15.1 The Contractor shall, on a daily basis, police and clean the site and surrounding areas of the project of his materials, rubbish, tools, construction equipment, machinery or any materials to be stored thereon, either temporarily or permanently.

ARTICLE 4 - ADMINISTRATION OF THE CONTRACT

4.1 ARCHITECT

Delete paragraph 4.1.3 in its entirety.

ARTICLE 7 - CHANGES IN THE WORK

7.3 CONSTRUCTION CHANGE DIRECTIVES

7.3.7 In the first sentence, delete the words "reasonable expenditures and savings" and substitute "an allowance for overhead and profit in accordance with subparagraph 7.3.11".

Add the following subparagraph 7.3.11:

7.3.11 "In subparagraph 7.3.11.1, the allowance for the combined overhead and profit included in the total cost to the Owner shall be based on the following schedule:

1. For the Contractor, for Work performed by the Contractor's own forces, the combined overhead and profit shall be based on the following schedule:

Value of Work	Combined Overhead & Profit
$ 0 - $ 1,000	5 percent
$ 1,0001 - $ 5,000	5 percent
$ 5,0001 - $10,000	5 percent
$10,001 - $25,000	5 percent

2. For the Contractor, for Work performed by the Contractor's

Subcontractor, the overhead and profit allowance shall be 5 (five) percent of the amount due the Subcontractor.

3. For each Subcontractor involved, for Work performed by that Subcontractor's own forces, the combined overhead and profit allowance shall be based on the same schedule indicated in 7.3.11.1

4. Cost to which overhead and profit is to be applied shall be determined in accordance with Subparagraph 7.3.11.

5. In order to facilitate checking quotations for extras or credits, all proposals, except those so minor that their propriety can be seen by inspection, shall be accompanied by a complete itemization of costs, including labor, materials and Subcontractors. Labor and materials shall be itemized in the manner described above. Where major cost items are Subcontractors, they shall be itemized also. In no case will a change be approved without such itemization."

6. When preparing a Construction Change Directive, please use AIA G714 Construction Change Directive (Form AIA G714 is enclosed at end of Division 01, Section *Contract Modification Procedures*).

ARTICLE 8- TIME

8.2 PROGRESS AND COMPLETION

Add the following Subparagraph to 8.2

8.2.4 "Should the progress of the Work be delayed by fault, neglect, act, or omission of the Contractor or by person or firm employed by him, the Contractor shall, at his own cost and expense, work such overtime as may be necessary to make up for time lost and to avoid delay in completion of the Work. If, in the opinion of the Engineer and Owner, the progress of the Work is unsatisfactory, overtime Work will be demanded and the Contractor shall institute overtime Work to meet the Construction Schedule at no additional cost to the Owner."

ARTICLE 9 - PAYMENTS AND COMPLETION

9.2 SCHEDULE OF VALUES

Add the following subparagraph 9.2

9.2.1 The Contractor's Schedule of Values data shall be submitted within fourteen (14) days after the award of Contract.

9.3 APPLICATIONS FOR PAYMENT

After subparagraph 9.3.3., add the following:

9.3.4 "On or about the thirtieth (30th) day after receipt of the Contractor's monthly request for payment from the Engineer, the Owner shall make payment on account of the contract as follows: Ninety percent (90%) of the value of the work completed up to the first (1st) day of that month, based upon the Contractor's estimate of labor and materials or equipment delivered and suitably stored at the site thereof up to the first (1st) day of that month, as approved by the Project Engineer and the Owner's Representative less the aggregate of any previous payments."

9.3.5 "Each request for payment shall be prepared on AIA Documents G702 and G703, 1992 edition, by the Contractor (copy enclosed). Present the original and three (3) copies (total of four) for joint review and action by the Engineer. The Engineer will deliver the original and two (2) copies to the Owner for processing. Owner will process payment upon approval by OWNER AGENCY. Contractor to allow up to thirty (30) days after the OWNER approval for issuance of payment." (A copy of G702 and G703 are enclosed at the end of Division 01, Section *Payment Procedures*.)

9.3.6 "At the time the General contractor is preparing each monthly requisition, it will be required that, upon completion of his rough pencil draft covering payment request, and prior to preparation the final draft, the rough draft will be reviewed by the Engineer and the General Contractor. Agreement shall be reached among these prior to the final draft of the requisition being forwarded to the Engineer for subsequent transmittal to the Owner for payment. It shall carry the notarized signature of the General Contractor and the Signature of the Engineer. Notarization is required by a notary public commissioned in the State of Delaware."

9.3.7 "When the "Application for Payment" includes material or equipment stored off-site, the application shall be accompanied with a certified statement including:

a) Description of item.
b) Bills of sale.
c) Location of storage and security thereof.
d) Indication that the item is currently covered by all contractual requirements, including Liability and Fire Insurance made out in the name of the Owner.
e) Indication that the material or equipment or any part thereof will not be installed in any other project construction other than work under this contract.
f) All items must be clearly marked, labeled or tagged for identification.
g) Available to the Owner and Engineer for inspection."

9.3.8 "When the "Application for Payment" includes materials or equipment delivered and suitably stored at the site but not incorporated in the work, the Engineer may require the Contractor to submit bills of sale to establish the Owner's title to such material and adequately protect the Owner's interest. Payments for stored

materials should not exceed seventy-five (75%) percent of actual value."

9.3.9 "All requisitions shall have Contractor's Certification on the Application for Payment form modified to read, "I certify that the above is a true statement of the status of the work and of the accounts; that work and material conform with the Contract and duly authorized charges; that all just and lawful bills against the undersigned and his Subcontractors for labor, materials and equipment required by the Contract have been paid in full through prior certificates." This certification is required to be duly notarized."

9.3.10 "When the Engineer and Owner agree that the project is substantially complete, is on schedule and it appears that there are not complicating problems in completing the job, the retainage may be reduced to five percent (5%) at the Owner's discretion."

9.3.11 "The Owner will require a release of liens from each Subcontractor and supplier covering work for which each progress payment is made."

9.3.13 "Upon request, when the Engineer and Owner agree that the building is ready for final inspection (preparation of the final punch list), and at the Owner's discretion, retainage may be further reduced or adjusted to the value of the remaining work, whichever is greater, if the project retainage has not already been reduced."

9.10 FINAL COMPLETION AND FINAL PAYMENT

After paragraph 9.10.5, add the following:

9.10.6 "The final payment to the Contractor does not become due until all requirements covered under Division 01, Project Closeout, have been certified by the Engineer."

9.10.7 "Release of liens shall be required of the Contractor, each Subcontractor and each material supplier prior to the final payment of any part of the retained percentage becoming due. Execute and forward with all releases of liens on the "Contractor's Affidavit of Release of Liens and Payment of Debts and Claims, AIA Form G-706, in duplicate. Forward with release of liens, two copies of AIA Form G-707, "Consent of Surety Company to Final Payment' properly executed and attested." (Forms AIA Form G-706 and G-707 are enclosed at the end of Division 01, Section *Payment Procedures*.)

9.10.8 "The Contractor's guarantee responsibility period commences upon the date of issuance of the Engineer's Certificate of Final Completion."

9.10.9 "The Owner shall deduct from the General Contractor's contract all hourly billings made by the Engineer for services required after the date of Substantial Completion <u>to Determine Final Completion</u> other than for <u>two</u> on-site punch list reviews."

ARTICLE 10 - PROTECTION OF PERSONS AND PROPERTY

10.2 SAFETY OF PERSONS AND PROPERTY

Add the following to subparagraph 10.2.6:

"This person, or approved alternate person, shall be on-site at all times while personnel for whom they are responsible are on-site. This person will be fully responsible for implementing and enforcing a program amongst his company's employees, that ensure their safety and the safety of other affected by their work, and that is in full compliance with the governing agencies including the Occupational Safety and Health Administration."

ARTICLE 11 -INSURANCE AND BONDS

After paragraph 11.1.3 add the following:

11.1.3.1 The Contractor shall obtain and continue in force, during the term of the contract, all insurance specified below. Each insurance policy shall not be canceled or changed without sixty (60) days' prior written notice by registered mail, given by the insurance carrier to Owner. The Contractor shall deposit with Owner certificates evidencing the insurance it is to provide as follows:

.1 Contractor's Contractual Liability Insurance, Minimum coverage to be:

Bodily Injury	$ 500,000	for each person
	$1,000,000	for each occurrence
	$1,000,000	aggregate
Property Damage	$ 500,000	for each occurrence
	$1,000,000	aggregate

.2 Contractor's Protective Liability Insurance, Minimum coverage to be:

Bodily Injury	$ 500,000	for each person
	$1,000,000	for each occurrence
	$1,000,000	aggregate
Property Damage	$ 500,000	for each occurrence
	$ 500,000	aggregate

.3 Automotive Liability Insurance, Minimum coverage to be:

Bodily Injury	$1,000,000	for each person
	$1,000,000	for each occurrence
Property Damage	$ 500,000	per accident

.4 Builder's Risk Insurance for the value of the project.

11.1.3.2 The Contractor shall cause the aforesaid insurance policies to be duly and properly endorsed by insurance underwriters as follows:

.1 To provide that OWNER is endorsed as an additional insured to the Contractor on liability coverage for work performed by the Contractor.

.2 To provide that said insurance shall be primary in all instances with respect to work performed by the Contractor for OWNER.

.3 To provide contractual liability coverage for liability assumed under the terms of the contract.

.4 To provide sixty (60) days' prior written notice of cancellation or change in coverage.

11.4 PERFORMANCE BOND AND PAYMENT BOND

Add the following after 11.4.1

A copy of AIA Document 312 Performance Bond and Payment Bond are enclosed at the end of this Section.

Add the following after subparagraph 11.4.2:

11.4.3 "The Contractor shall furnish bonds covering faithful performance of the Contract and payment of obligations arising thereunder. Bonds may be obtained through the Contractors usual source and the cost thereof shall be included in the Contract Sum. The amount of each bond shall be equal to 100 percent of the Contract Sum."

11.4.4 "The Contractor shall deliver the required bonds to the Owner concurrently with date the Agreement is entered into, or if the Work is to be commenced prior thereto in response to a letter of intent, the Contractor shall, prior to the commencement of the Work, submit evidence satisfactory to the Owner that such bonds will be furnished."

11.4.5 "The Contractor shall require the attorney-in-fact, who executes the required bonds on behalf of the surety, to affix a certified and current copy of the power of attorney to each of the bonds."

ARTICLE 15 - CLAIMS AND DISPUTES

15.1.5 Claims for Additional Time
At the end of subparagraph 15.1.5.2 add the following:

"In no case shall any weather claims for contract time extension be honored and neither shall they be construed to add changes for

Contractor's overhead and project administration. Approved contract time extension for weather, based upon National Weather Service data for extreme weather beyond a five (5) year normal, will be acknowledged and may be accounted for in reducing liquidated damages only."

15.3 MEDIATION

Delete Article 15.3 MEDIATION in its entirety.

15.4 ARBITRATION

Delete Article 15.4 ARBITRATION in its entirely.

Add the following ARTICLE 16 - LIQUIDATED DAMAGES:

ARTICLE 16 - LIQUIDATED DAMAGES

16.1 "It is expressly understood and agreed by and between the Contractor and the Owner that the Contract time stipulated in the bid form is a reasonable time for completion of the work, taking into consideration the average climatic range and the usual conditions prevailing in the locality of the project. Time is an essential element of the contract and it is important that the work be vigorously prosecuted and conform to the scheduled start and finish dates of the Construction Documents."

16.2 "The Contractor agrees that he can and will substantially complete the total projects work in accordance with the Contract Documents within the stated Contract Time."

16.3 "The Owner and Contractor agree that due to the uniqueness of this contract and the fact that the Owner is a private agency and the relevant factors, damages resulting from failure of the Contractor to perform the contract within the time specified therefore will result in damages to the Owner which shall be difficult, if not impossible, to ascertain; therefore, the provision for damages herein specified shall be applied in the event of such a default. The Owner and the Contractor, both of whom are, by their own admissions, sophisticated business entities with prior experience in dealing with construction contracts, stipulate that damages shall be the sum of $500.00 for each day that the work shall remain uncompleted beyond the time(s) specified elsewhere in the contract, provided, however, that due account shall be taken of any adjustment of specified completion time(s) for completion of work as granted by approved change orders."

16.4 "The Contractor, by the execution of the contract document, does hereby irrevocably constitute, designate and appoint the Owner to be his agent for the limited but express purpose of deducting on a daily basis the liquidated damages as above determined from the balance of the contract funds in the hands of the Owner and due to the Contractor, and the failure of the Owner to deduct such sum for any day or any combination of days, whether consecutive or not, shall not operates as a waiver of such liquidated damages for that period, and such damages for such day or days shall be cumulative and may be

subsequently deducted by the Owner from such sums as may be due the Contractor, but work performed. In the event that the amounts due the Contractor are less than the amount of such damages, the Contractor, shall be liable to the Owner for the difference."

16.5 "The power granted by the Contractor to the Owner above is a power coupled with an interest and is irrevocable."

END OF SECTION

AIA Document A312 - Electronic Format

Performance Bond

THIS DOCUMENT HAS IMPORTANT LEGAL CONSEQUENCES: CONSULTATION WITH AN ATTORNEY IS ENCOURAGED WITH RESPECT TO ITS COMPLETION OR MODIFICATION. AUTHENTICATION OF THIS ELECTRONICALLY DRAFTED AIA DOCUMENT MAY BE MADE BY USING AIA DOCUMENT D401.

Any singular reference to Contract, Surety, Owner or other party shall be considered plural where applicable.

CONTRACTOR (Name and Address):

SURETY (Name and Principal Place of Business):

OWNER (Name and Address):

CONSTRUCTION CONTRACT
Date:
Amount:
Description (Name and Location):

BOND
Date (Not earlier than Construction Contract Date):
Amount:
Modifications to this Bond: ☐ None ☐ See Last Page

CONTRACTOR AS PRINCIPAL
Company: (Corporate Seal)

Signature:
Name and Title:
(Any additional signatures appear on the last page)

SURETY
Company: (Corporate Seal)

Signature:
Name and Title:

(FOR INFORMATION ONLY - Name, Address and Telephone)

AGENT or BROKER:

OWNER'S REPRESENTATIVE (Architect, Engineer or other party):

1 The Contractor and the Surety, jointly and severally, bind themselves, their heirs, executors, administrators, successors and assigns to the Owner for the performance of the Construction Contract, which is incorporated herein by reference.

2 If the Contractor performs the Construction Contract, the Surety and the Contractor shall have no obligation under this Bond, except to participate in conferences as provided in Subparagraph 3.1.

3 If there is no Owner Default, the Surety's obligation under this Bond shall arise after:

3.1 The Owner has notified the Contractor and the Surety at its address described in Paragraph 10 below that the Owner is considering declaring a Contractor Default and has requested and attempted to arrange a conference with the Contractor and the Surety to be held not later than fifteen days after receipt of such notice to discuss methods of performing the Construction Contract. If the Owner, the Contractor and the Surety agree, the

© 1984 THE AMERICAN INSTITUTE OF ARCHITECTS, 1735 NEW YORK AVENUE, N.W., WASHINGTON, D.C. 20006-5292. AIA DOCUMENT A312 • PERFORMANCE BOND AND PAYMENT BOND • DECEMBER 1984 ED. • AIA® • THIRD PRINTING • MARCH 1987 • WARNING: Unlicensed photocopying violates U.S. copyright laws and is subject to legal prosecution. This document was electronically produced with permission of the AIA and can be reproduced in accordance with your license without violation until the date of expiration as noted below.
This document is not an original AIA® Contract Document, but a reproduction produced by AIA® Contract Documents software for administrative purposes only and is not for other use or resale.

SAMPLE

Contractor shall be allowed a reasonable time to perform the Construction Contract, but such an agreement shall not waive the Owner's right, if any, subsequently to declare a Contractor Default; and

3.2 The Owner has declared a Contractor Default and formally terminated the Contractor's right to complete the contract. Such Contractor Default shall not be declared earlier than twenty days after the Contractor and the Surety have received notice as provided in Subparagraph 3.1; and

3.3 The Owner has agreed to pay the Balance of the Contract Price to the Surety in accordance with the terms of the Construction Contract or to a contractor selected to perform the Construction Contract in accordance with the terms of the contract with the Owner.

4 When the Owner has satisfied the conditions of Paragraph 3, the Surety shall promptly and at the Surety's expense take one of the following actions:

4.1 Arrange for the Contractor, with consent of the Owner, to perform and complete the Construction Contract; or

4.2 Undertake to perform and complete the Construction Contract itself, through its agents or through independent contractors; or

4.3 Obtain bids or negotiated proposals from qualified contractors acceptable to the Owner for a contract for performance and completion of the Construction Contract, arrange for a contract to be prepared for execution by the Owner and the contractor selected with the Owner's concurrence, to be secured with performance and payment bonds executed by a qualified surety equivalent to the bonds issued on the Construction Contract, and pay to the Owner the amount of damages as described in Paragraph 6 in excess of the Balance of the Contract Price incurred by the Owner resulting from the Contractor's default; or

4.4 Waive its right to perform and complete, arrange for completion, or obtain a new contractor and with reasonable promptness under the circumstances:

.1 After investigation, determine the amount for which it may be liable to the Owner and, as soon as practicable after the amount is determined, tender payment therefor to the Owner; or

.2 Deny liability in whole or in part and notify the Owner citing reasons therefor.

5 If the Surety does not proceed as provided in Paragraph 4 with reasonable promptness, the Surety shall be deemed to be in default on this Bond fifteen days after receipt of an additional written notice from the Owner to the Surety demanding that the Surety perform its obligations under this Bond, and the Owner shall be entitled to enforce any remedy available to the Owner. If the Surety proceeds as provided in Subparagraph 4.4, and the Owner refuses the payment tendered or the Surety has denied liability, in whole or in part, without further notice the Owner shall be entitled to enforce any remedy available to the Owner.

6 After the Owner has terminated the Contractor's right to complete the Construction Contract, and if the Surety elects to act under Subparagraph 4.1, 4.2, or 4.3 above, then the responsibilities of the Surety to the Owner shall not be greater than those of the Contractor under the Construction Contract, and the responsibilities of the Owner to the Surety shall not be greater than those of the Owner under the Construction Contract. To the limit of the amount of this Bond, but subject to commitment by the Owner of the Balance of the Contract Price to mitigation of costs and damages on the Construction Contract, the Surety is obligated without duplication for:

6.1 The responsibilities of the Contractor for correction of defective work and completion of the Construction Contract;

6.2 Additional legal, design professional and delay costs resulting from the Contractor's Default, and resulting from the actions or failure to act of the Surety under Paragraph 4; and

6.3 Liquidated damages, or if no liquidated damages are specified in the Construction Contract, actual damages caused by delayed performance or non-performance of the Contractor.

7 The Surety shall not be liable to the Owner or others for obligations of the Contractor that are unrelated to the Construction Contract, and the Balance of the Contract Price shall not be reduced or set off on account of any such unrelated obligations. No right of action shall accrue on this Bond to any person or entity other than the Owner or its heirs, executors, administrators or successors.

8 The Surety hereby waives notice of any change, including changes of time, to the Construction Contract or to related subcontracts, purchase orders and other obligations.

SAMPLE

© 1984 THE AMERICAN INSTITUTE OF ARCHITECTS, 1735 NEW YORK AVENUE, N.W., WASHINGTON, D.C. 20006-5292. AIA DOCUMENT A312 • PERFORMANCE BOND AND PAYMENT BOND • DECEMBER 1984 ED. • AIA® • THIRD PRINTING • MARCH 1987 • WARNING: Unlicensed photocopying violates U.S. copyright laws and is subject to legal prosecution. This document was electronically produced with permission of the AIA and can be reproduced in accordance with your license without violation until the date of expiration as noted below.
This document is not an original AIA® Contract Document, but a reproduction produced by AIA® Contract Documents software for administrative purposes only and is not for other use or resale.

9 Any proceeding, legal or equitable, under this Bond may be instituted in any court of competent jurisdiction in the location in which the work or part of the work is located and shall be instituted within two years after Contractor Default or within two years after the Contractor ceased working or within two years after the Surety refuses or fails to perform its obligations under this Bond, whichever occurs first. If the provisions of this Paragraph are void or prohibited by law, the minimum period of limitation available to sureties as a defense in the jurisdiction of the suit shall be applicable.

10 Notice to the Surety, the Owner or the Contractor shall be mailed or delivered to the address shown on the signature page.

11 When this Bond has been furnished to comply with a statutory or other legal requirement in the location where the construction was to be performed, any provision in this Bond conflicting with said statutory or legal requirement shall be deemed deleted here from and provisions conforming to such statutory or other legal requirement shall be deemed incorporated herein. The intent is that this Bond shall be construed as a statutory bond and not as a common law bond.

12 DEFINITIONS

12.1 Balance of the Contract Price: The total amount payable by the Owner to the Contractor under the Construction Contract after all proper adjustments have been made, including allowance to the Contractor of any amounts received or to be received by the Owner in settlement of insurance or other claims for damages to which the Contractor is entitled, reduced by all valid and proper payments made to or on behalf of the Contractor under the Construction Contract.

12.2 Construction Contract: The agreement between the Owner and the Contractor identified on the signature page, including all Contract Documents and changes thereto.

12.3 Contractor Default: Failure of the Contractor, which has neither been remedied nor waived, to perform or otherwise to comply with the terms of the Construction Contract.

12.4 Owner Default: Failure of the Owner, which has neither been remedied nor waived, to pay the Contractor as required by the Construction Contract or to perform and complete or comply with the other terms thereof.

MODIFICATIONS TO THIS BOND ARE AS FOLLOWS:

(Space is provided below for additional signatures of added parties, other than those appearing on the cover page.)

CONTRACTOR AS PRINCIPAL		SURETY	
Company:	(Corporate Seal)	Company:	(Corporate Seal)
Signature:		Signature:	
Name and Title:		Name and Title:	
Address:		Address:	

AIA Document A312 - Electronic Format

Payment Bond

THIS DOCUMENT HAS IMPORTANT LEGAL CONSEQUENCES: CONSULTATION WITH AN ATTORNEY IS ENCOURAGED WITH RESPECT TO ITS COMPLETION OR MODIFICATION. AUTHENTICATION OF THIS ELECTRONICALLY DRAFTED AIA DOCUMENT MAY BE MADE BY USING AIA DOCUMENT D401.

Any singular reference to Contract, Surety, Owner or other party shall be considered plural where applicable.

CONTRACTOR (Name and Address):

SURETY (Name and Principal Place of Business):

© 1984 THE AMERICAN INSTITUTE OF ARCHITECTS, 1735 NEW YORK AVENUE, N.W., WASHINGTON, D.C. 20006-5292. AIA DOCUMENT A312 • PERFORMANCE BOND AND PAYMENT BOND • DECEMBER 1984 ED. • AIA® • THIRD PRINTING • MARCH 1987 • WARNING: Unlicensed photocopying violates U.S. copyright laws and is subject to legal prosecution. This document was electronically produced with permission of the AIA and can be reproduced in accordance with your license without violation until the date of expiration as noted below.
This document is not an original AIA® Contract Document, but a reproduction produced by AIA® Contract Documents software for administrative purposes only and is not for other use or resale.

SAMPLE

OWNER (Name and Address):

CONSTRUCTION CONTRACT
Date:
Amount:
Description (Name and Location):

BOND
Date (Not earlier than Construction Contract Date):
Amount:
Modifications to this Bond: ☐ None ☐ See Last Page

CONTRACTOR AS PRINCIPAL
Company: (Corporate Seal)

Signature: _____
Name and Title:
(Any additional signatures appear on the last page)

SURETY
Company: (Corporate Seal)

Signature: _____
Name and Title:

(FOR INFORMATION ONLY - Name, Address and Telephone)

AGENT or BROKER:

OWNER'S REPRESENTATIVE (Architect, Engineer or other party):

1 The Contractor and the Surety, jointly and severally bind themselves, their heirs, executors, administrators, successors and assigns to the Owner to pay for labor, materials and equipment furnished for use in the performance of the Construction Contract, which is incorporated herein by reference.

2 With respect to the Owner, this obligation shall be null and void if the Contractor:

2.1 Promptly makes payment, directly or indirectly, for all sums due Claimants, and

2.2 Defends, indemnifies and holds harmless the Owner from claims, demands, liens or suits by any person or entity whose claim, demand, lien or suit is for the payment for labor, materials or equipment furnished for use in the performance of the Construction Contract, provided the Owner has promptly notified the Contractor and the Surety (at the address described in Paragraph 12) of any claims, demands, liens or suits and tendered defense of such claims, demands, liens or suits to the Contractor and the Surety, and provided there is no Owner Default.

3 With respect to Claimants, this obligation shall be null and void if the Contractor promptly makes payment, directly or indirectly, for all sums due.

4 The Surety shall have no obligation to Claimants under this Bond until:

4.1 Claimants who are employed by or have a direct contract with the Contractor have given notice to the Surety (at the address described in Paragraph 12) and sent a copy, or notice thereof, to the Owner, stating that a claim is being made under this Bond and, with substantial accuracy, the amount of the claim.

4.2 Claimants who do not have a direct contract with the Contractor:

SAMPLE

© 1984 THE AMERICAN INSTITUTE OF ARCHITECTS, 1735 NEW YORK AVENUE, N.W., WASHINGTON, D.C. 20006-5292. AIA DOCUMENT A312 • PERFORMANCE BOND AND PAYMENT BOND • DECEMBER 1984 ED. • AIA® • THIRD PRINTING • MARCH 1987 • WARNING: Unlicensed photocopying violates U.S. copyright laws and is subject to legal prosecution. This document was electronically produced with permission of the AIA and can be reproduced in accordance with your license without violation until the date of expiration as noted below.
This document is not an original AIA® Contract Document, but a reproduction produced by AIA® Contract Documents software for administrative purposes only and is not for other use or resale.

.1 Have furnished written notice to the Contractor and sent a copy, or notice thereof, to the Owner, within 90 days after having last performed labor or last furnished materials or equipment included in the claim stating, with substantial accuracy, the amount of the claim and the name of the party to whom the materials were furnished or supplied or for whom the labor was done or performed; and

.2 Have either received a rejection in whole or in part from the Contractor, or not received within 30 days of furnishing the above notice any communication from the Contractor by which the Contractor has indicated the claim will be paid directly or indirectly; and

.3 Not having been paid within the above 30 days, have sent a written notice to the Surety (at the address described in Paragraph 12) and sent a copy, or notice thereof, to the Owner, stating that a claim is being made under this Bond and enclosing a copy of the previous written notice furnished to the Contractor.

5 If a notice required by Paragraph 4 is given by the Owner to the Contractor or to the Surety, that is sufficient compliance.

When the Claimant has satisfied the conditions of Paragraph 4, the Surety shall promptly and at the Surety's expense take the following actions:

6.1 Send an answer to the Claimant, with a copy to the Owner, within 45 days after receipt of the claim, stating the amounts that are undisputed and the basis for challenging any amounts that are disputed.

6.2 Pay or arrange for payment of any undisputed amounts.

7 The Surety's total obligation shall not exceed the amount of this Bond, and the amount of this Bond shall be credited for any payments made in good faith by the Surety.

8 Amounts owed by the Owner to the Contractor under the Construction Contract shall be used for the performance of the Construction Contract and to satisfy claims, if any, under any Construction Performance Bond. By the Contractor furnishing and the Owner accepting this Bond, they agree that all funds earned by the Contractor in the performance of the Construction Contract are dedicated to satisfy obligations of the Contractor and the Surety under this Bond, subject to the Owner's priority to use the funds for the completion of the work.

9 The Surety shall not be liable to the Owner, Claimants or others for obligations of the Contractor that are unrelated to the Construction Contract. The Owner shall not be liable for payment of any costs or expenses of any Claimant under this Bond, and shall have under this Bond no obligations to make payments to, give notices on behalf of, or otherwise have obligations to Claimants under this Bond.

10 The Surety hereby waives notice of any change, including changes of time, to the Construction Contract or to related subcontracts, purchase orders and other obligations.

11 No suit or action shall be commenced by a Claimant under this Bond other than in a court of competent jurisdiction in the location in which the work or part of the work is located or after the expiration of one year from the date (1) on which the Claimant gave the notice required by Subparagraph 4.1 or Clause 4.2.3, or (2) on which the last labor or service was performed by anyone or the last materials or equipment were furnished by anyone under the Construction Contract, whichever of (1) or (2) first occurs. If the provisions of this Paragraph are void or prohibited by law, the minimum period of limitation available to sureties as a defense in the jurisdiction of the suit shall be applicable.

12 Notice to the Surety, the Owner or the Contractor shall be mailed or delivered to the address shown on the signature page. Actual receipt of notice by Surety, the Owner or the Contractor, however accomplished, shall be sufficient compliance as of the date received at the address shown on the signature page.

13 When this Bond has been furnished to comply with a statutory or other legal requirement in the location where the construction was to be performed, any provision in this Bond conflicting with said statutory or legal requirement shall be deemed deleted herefrom and provisions conforming to such statutory or other legal requirement shall be deemed incorporated herein. The intent is that this Bond shall be construed as a statutory bond and not as a common law bond.

14 Upon request by any person or entity appearing to be a potential beneficiary of this Bond, the Contractor shall promptly furnish a copy of this Bond or shall permit a copy to be made.

15 DEFINITIONS

© 1984 THE AMERICAN INSTITUTE OF ARCHITECTS, 1735 NEW YORK AVENUE, N.W., WASHINGTON, D.C. 20006-5292. AIA DOCUMENT A312 • PERFORMANCE BOND AND PAYMENT BOND • DECEMBER 1984 ED. • AIA® • THIRD PRINTING • MARCH 1987 • WARNING: Unlicensed photocopying violates U.S. copyright laws and is subject to legal prosecution. This document was electronically produced with permission of the AIA and can be reproduced in accordance with your license without violation until the date of expiration as noted below.
This document is not an original AIA® Contract Document, but a reproduction produced by AIA® Contract Documents software for administrative purposes only and is not for other use or resale.

SAMPLE

15.1 Claimant: An individual or entity having a direct contract with the Contractor or with a subcontractor of the Contractor to furnish labor, materials or equipment for use in the performance of the Contract. The intent of this Bond shall be to include without limitation in the terms "labor, materials or equipment" that part of water, gas, power, light, heat, oil, gasoline, telephone service or rental equipment used in the Construction Contract, architectural and engineering services required for performance of the work of the Contractor and the Contractor's subcontractors, and all other items for which a mechanic's lien may be asserted in the jurisdiction where the labor, materials or equipment were furnished.

15.2 Construction Contract: The agreement between the Owner and the Contractor identified on the signature page, including all Contract Documents and changes thereto.

15.3 Owner Default: Failure of the Owner, which has neither been remedied nor waived, to pay the Contractor as required by the Construction Contract or to perform and complete or comply with the other terms thereof.

MODIFICATIONS TO THIS BOND ARE AS FOLLOWS:

(Space is provided below for additional signatures of added parties, other than those appearing on the cover page.)

CONTRACTOR AS PRINCIPAL		SURETY	
Company:	(Corporate Seal)	Company:	(Corporate Seal)
Signature:		Signature:	
Name and Title:		Name and Title:	
Address:		Address:	

SAMPLE

© 1984 THE AMERICAN INSTITUTE OF ARCHITECTS, 1735 NEW YORK AVENUE, N.W., WASHINGTON, D.C. 20006-5292. AIA DOCUMENT A312 • PERFORMANCE BOND AND PAYMENT BOND • DECEMBER 1984 ED. • AIA® • THIRD PRINTING • MARCH 1987 • WARNING: Unlicensed photocopying violates U.S. copyright laws and is subject to legal prosecution. This document was electronically produced with permission of the AIA and can be reproduced in accordance with your license without violation until the date of expiration as noted below.
This document is not an original AIA® Contract Document, but a reproduction produced by AIA® Contract Documents software for administrative purposes only and is not for other use or resale.

SECTION 008114: DRUG TESTING FORMS

PART 1 GENERAL

1.1 SUMMARY

A. Pursuant to 4104 Regulations for the Drug Testing of Contractor and Subcontractor Employees Working on Large Public Works Projects requires that Contractors and Subcontractors who work on Large Public Works Contracts funded all or in part with public funds submit Testing Report Forms to the Owner no less than quarterly. See the form attached hereto.

B. The Contractor will notify the Owner in writing of any positive results of random drug testing. See the form attached hereto. The results must be reported to the Owner within 24 hours of receipt of the test results.

PART 2 PRODUCTS

NOT USED

PART 3 EXECUTION

NOT USED

END OF SECTION

SECTION 008114: DRUG TESTING FORMS

EMPLOYEE DRUG TESTING REPORT FORM
Period Ending:

4104 Regulations for the Drug Testing of Contractor and Subcontractor Employees Working on Large Public Works Projects requires that Contractors and Subcontractors who work on Large Public Works Contracts funded all or in part with public funds submit Testing Report Forms to the Owner no less than quarterly.

Project Number: _____

Project Name: _____

Contractor/Subcontractor Name: _____

Contractor/Subcontractor Address: _____

_____

_____

Number of employees who worked on the jobsite during the report period:_____

Number of employees subject to random testing during the report period:_____

Number of Negative Results _____Number of Positive Results _____

Action taken on employee(s) in response to a failed or positive random test:

_____

_____

_____

Authorized Representative of Contractor/Subcontractor: _____
(typed or printed)

Authorized Representative of Contractor/Subcontractor: _____
(signature)

Date: _____

EMPLOYEE DRUG TESTING
REPORT OF POSITIVE RESULTS

4104 Regulations for the Drug Testing of Contractor and Subcontractor Employees Working on Large Public Works Projects requires that Contractors and Subcontractors who work on Large Public Works Contracts funded all or in part with public funds to notify the Owner in writing of a positive random drug test.

Project Number: _____

Project Name: _____

Contractor/Subcontractor Name: _____

Contractor/Subcontractor Address: _____

_____

_____

Name of employee with positive test result: _____

Last 4 digits of employee SSN:_____

Date test results received:_____

Action taken on employee in response to a positive test result:

_____

_____

_____

Authorized Representative of Contractor/Subcontractor:_____
(typed or printed)

Authorized Representative of Contractor/Subcontractor:_____
(signature)

Date: _____

This form shall be sent by mail to the Owner within 24 hours of receipt of test results.

Enclose this test results form in a sealed envelope with the notation "Drug Testing Form – DO NOT OPEN" on the face thereof and place in a separate mailing envelope.

END OF SECTION

EMPLOYEE DRUG TESTING REPORT FORM
Period Ending:_____

4104 Regulations for the Drug Testing of Contractor and Subcontractor Employees Working on Large Public Works Projects requires that Contractors and Subcontractors who work on Large Public Works Contracts funded all or in part with public funds submit Testing Report Forms to the Owner no less than quarterly.

Project Number: _____

Project Name: _____

Contractor/Subcontractor Name: _____

Contractor/Subcontractor Address: _____
_____
_____

Number of employees who worked on the jobsite during the report period:_____

Number of employees subject to random testing during the report period:_____

Number of Negative Results _____ Number of Positive Results _____

Action taken on employee(s) in response to a failed or positive random test:
_____
_____
_____

Authorized Representative of Contractor/Subcontractor: _____
(typed or printed)

Authorized Representative of Contractor/Subcontractor: _____
(signature)

Date: _____

EMPLOYEE DRUG TESTING
REPORT OF POSITIVE RESULTS

4104 Regulations for the Drug Testing of Contractor and Subcontractor Employees Working on Large Public Works Projects requires that Contractors and Subcontractors who work on Large Public Works Contracts funded all or in part with public funds to notify the Owner in writing of a positive random drug test.

Project Number: _____

Project Name: _____

Contractor/Subcontractor Name: _____

Contractor/Subcontractor Address: _____
_____
_____

Name of employee with positive test result:_____

Last 4 digits of employee SSN:_____

Date test results received:_____

Action taken on employee in response to a positive test result:
_____
_____
_____

Authorized Representative of Contractor/Subcontractor: _____
(typed or printed)

Authorized Representative of Contractor/Subcontractor: _____
(signature)

Date: _____

This form shall be sent by mail to the Owner within 24 hours of receipt of test results.

Enclose this test results form in a sealed envelope with the notation "Drug Testing Form – DO NOT OPEN" on the face thereof and place in a separate mailing envelope.

SECTION 009100: PREVAILING WAGES

Owner has requested specific wage scale rates for this project and the same shall be included with the bidding documents.

PART 1 GENERAL

1.1 DESCRIPTION

A. Copy of The State of Delaware Prevailing Wage Determination and Instruction for Contractors

PART 2 PRODUCTS

NOT USED

PART 3 EXECUTION

NOT USED

END OF SECTION

STATE OF DELAWARE
DEPARTMENT OF LABOR
DIVISION OF INDUSTRIAL AFFAIRS
4425 NORTH MARKET STREET
WILMINGTON, DELAWARE 19802

TELEPHONE (302) 761-8200
FAX (302) 761-6601

Via Electronic and Regular Mail

April 19, 2018

Mr. Tony Vassalotti
Richard Y Johnson &
18404 Johnson Road
P.O. Box 105
Lincoln, DE 19960

Re: HED 17102 Owens Campus Carter Fume Hood / Ventilation System, Sussex County, DE

Dear Mr. Vassalotti:

I am responding to your request for a category determination for the HED 17102 Owens Campus Carter Fume Hood Ventilation System, which is a state funded construction project located in Sussex County, DE. The work consists of Science Lab Fume Hood and Ductwork replacement and ventilation work Resubmit for 2018 Rates. You estimate the total cost of construction for this project to be $500,000.00.

Based upon the information you provided the Department of Labor has determined that this project is a Building Construction project.

Delaware's Prevailing Wage Regulations provide that the rates applicable to a project are the rates in effect on the date of publication of the specifications for that project. I have enclosed a certified copy of the March 15, 2018, prevailing wage rates for Building Construction to be included in your bid specification. However, please be advised that, in the event that a contract for a project is not executed within one hundred and twenty (120) days from the earliest date the specifications were published, the rates in effect at the time of the execution of the contract shall be the applicable rates for the project.

This determination is directed solely to the parties identified herein. It is based on the unique facts relevant to this matter. It does not constitute precedent and should not be cited as such by future parties.

Lastly, please see the enclosed debarment list. Entities/individuals listed shall not be permitted to bid on, be awarded or work on Delaware State funded construction projects, in the timeframe specified, as provided for under 29 Del.C. §6960 or other applicable State statutes.

If you have any questions or I can provide any additional assistance, please do not hesitate to contact me at 302 761 8326.

Sincerely,

Michael Hopkins

Michael Hopkins
Labor Law Enforcement Officer
Michael.Hopkins@state.de.us

Enclosures

STATE OF DELAWARE
DEPARTMENT OF LABOR
DIVISION OF INDUSTRIAL AFFAIRS
OFFICE OF LABOR LAW ENFORCEMENT
PHONE: 302 761 8200

Mailing Address:
4425 North Market St., 3rd Fl
Wilmington, DE 19802

Located at:
4425 North Market St., 3rd Fl
Wilmington, DE 19802

PREVAILING WAGES FOR **BUILDING CONSTRUCTION** EFFECTIVE MARCH 15, 2018

CLASSIFICATION	NEW CASTLE	KENT	SUSSEX
ASBESTOS WORKERS	23.35	28.76	41.85
BOILERMAKERS	69.90	35.46	52.14
BRICKLAYERS	53.89	53.89	53.89
CARPENTERS	54.81	54.81	43.57
CEMENT FINISHERS	73.74	51.37	22.64
ELECTRICAL LINE WORKERS	46.44	39.82	30.36
ELECTRICIANS	68.70	68.70	68.70
ELEVATOR CONSTRUCTORS	93.23	65.86	32.62
GLAZIERS	73.10	73.10	57.87
INSULATORS	56.53	56.53	56.53
IRON WORKERS	63.70	63.70	63.70
LABORERS	46.20	46.20	46.20
MILLWRIGHTS	71.60	71.60	57.70
PAINTERS	51.55	51.55	51.55
PILEDRIVERS	76.77	40.19	32.51
PLASTERERS	30.48	30.48	22.59
PLUMBERS/PIPEFITTERS/STEAMFITTERS	70.05	53.97	58.81
POWER EQUIPMENT OPERATORS	69.29	69.29	64.96
ROOFERS-COMPOSITION	24.52	24.20	22.10
ROOFERS-SHINGLE/SLATE/TILE	18.78	22.33	17.56
SHEET METAL WORKERS	68.53	68.53	68.53
SOFT FLOOR LAYERS	52.52	52.52	52.52
SPRINKLER FITTERS	59.49	59.49	59.49
TERRAZZO/MARBLE/TILE FNRS	61.93	61.93	48.52
TERRAZZO/MARBLE/TILE STRS	68.52	68.52	56.19
TRUCK DRIVERS	29.36	28.02	21.39

CERTIFIED: 4/20/18

BY: _____
ADMINISTRATOR, OFFICE OF LABOR LAW ENFORCEMENT

NOTE: THESE RATES ARE PROMULGATED AND ENFORCED PURSUANT TO THE PREVAILING WAGE REGULATIONS ADOPTED BY THE DEPARTMENT OF LABOR ON APRIL 3, 1992.

CLASSIFICATIONS OF WORKERS ARE DETERMINED BY THE DEPARTMENT OF LABOR. FOR ASSISTANCE IN CLASSIFYING WORKERS, OR FOR A COPY OF THE REGULATIONS OR CLASSIFICATIONS, PHONE 302 761 8200

NON-REGISTERED APPRENTICES MUST BE PAID THE MECHANIC'S RATE.

PROJECT: HED 17102 ns Campus Carter Fume Hood Ventilation System, Sussex County

PREVAILING WAGE DEBARMENT LIST

The following contractors have been debarred for violations of the prevailing wage law 29Del.C. §6960 or other applicable State statutes.

Therefore, no public construction contract in this State shall be bid on, awarded to, or received by contractors and individuals on this list for a period of (3) three years from the date of the judgment or as deemed by a court of competent jurisdiction.

Contractor	Address	Date of Debarment
Mullen Brothers, Inc. and Daniel Mullen, individually	3375 Garnett Road, Boothwyn, PA 19060	Indefinite/ Civil Contempt
Site Work Safety Supplies, Inc. and Peter Coker, individually	4020 Seven Hickories Road Dover, DE 19904	1/12/2016
Green Granite and Jason Green, individually	604 Heatherbrooke Court Avondale, PA 19311	Indefinite/ Civil Contempt
Pro Image Landscaping, Inc. and Owner(s) individually	23 Commerce Street Wilmington, DE 19801 and/or 2 Cameo Road Claymont, DE 19703	Indefinite/19 Del.C. §108 & 10 Del.C. 542(c)
Liberty Mechanical, LLC and Owner(s), individually	2032 Duncan Road Wilmington, DE 19801	Indefinite/ 19 Del.C. 2374(f)
Integrated Mechanical and Fire Systems Inc. and Allison Sheldon, individually	4601 Governor Printz Boulevard Wilmington, DE 19809	Indefinite/19 Del.C. §108 & 10 Del.C. 542(c)

Updated: March 19, 2018

SECTION 011000 – SUMMARY OF WORK

PART 1 - GENERAL

1.1 RELATED DOCUMENTS

A. Drawings and general provisions of the Contract, including General and Supplementary Conditions and other Division 01 Specification Sections, apply to this Section.

1.2 SUMMARY

A. Section includes:

1. Project information.
2. Work covered by Contract Documents.
3. Phased construction.
4. Work by Owner.
5. Work under separate contracts.
6. Future work.
7. Purchase contracts.
8. Owner-furnished products.
9. Contractor-furnished, Owner-installed products.
10. Access to site.
11. Coordination with occupants.
12. Work restrictions.
13. Specification and drawing conventions.

B. Related Section:

1. Division 01 Section "Temporary Facilities and Controls" for limitations and procedures governing temporary use of Owner's facilities.

1.3 PROJECT INFORMATION

A. Project Identification: Delaware Technical Community College, Georgetown Carter Center Hood.

1. Project Location: 21179 College Drive, Georgetown, Delaware, 19947

B. Owner: Delaware Technical Community College – Owens Campus, 21179 College Drive, Georgetown, Delaware, 19947

1. Owner's Representative: Scott Iseman, Director of Administrative Services, Jack F. Owens Campus Box 610 Georgetown, Delaware 19947, Phone: 302-259-6230, siseman@dtcc.edu

C. Engineer of Record: Gipe Associates, Inc. 8719 Brooks Drive, Easton, Maryland 21601

1. Engineer's Representative: David Hoffman, President, 8719 Brooks Drive, Easton, Maryland 21601, Phone: 410-822-8688, dhoffman@gipe.net

D. Design Engineer: KLH Eastern Shore, 4319 Dolby Farm Road, Box 205, Hurlock, MD 21643,

1. Design Engineer Representative: Ken Heesh, 4319 Dolby Farm Road, Box 205, Hurlock, MD 21643, Phone: 410-376-7329, kheesh@klhes.com

1.4 WORK COVERED BY CONTRACT DOCUMENTS

A. The Work of the Project is defined by the Contract Documents and consists of the following:

1. The removal and installation of fume hood exhaust fans, terminal units, ductwork, supporting electrical work, supports, controls, insulation, and testing/balancing.

B. Type of Contract

1. Project will be constructed under a single prime contract.

1.5 ACCESS TO SITE

A. General: Contractor shall have full use of Project site for construction operations during construction period. Contractor's use of Project site is limited only by Owner's right to perform work or to retain other contractors on portions of Project.

B. General: Contractor shall have limited use of Project site for construction operations as indicated on Drawings by the Contract limits and as indicated by requirements of this Section.

C. Use of Site: Limit use of Project site to work in areas indicated. Do not disturb portions of Project site beyond areas in which the Work is indicated.

1. Limits: Confine construction operations to existing boiler room and adjacent exterior parking lot.
2. Driveways, Walkways and Entrances: Keep driveways loading areas, and entrances serving premises clear and available to Owner, Owner's employees, and emergency vehicles at all times. Do not use these areas for parking or storage of materials.

a. Schedule deliveries to minimize use of driveways and entrances by construction operations.
b. Schedule deliveries to minimize space and time requirements for storage of materials and equipment on-site.

D. Condition of Existing Building: Maintain portions of existing building affected by construction operations in a weathertight condition throughout construction period. Repair damage caused by construction operations.

1.6 COORDINATION WITH OCCUPANTS

A. Full Owner Occupancy: Owner will occupy site and existing building(s) during entire construction period. Cooperate with Owner during construction operations to minimize conflicts and facilitate Owner usage. Perform the Work so as not to interfere with Owner's day-to-day operations. Maintain existing exits unless otherwise indicated.

1. Maintain access to existing walkways, corridors, and other adjacent occupied or used facilities. Do not close or obstruct walkways, corridors, or other occupied or used facilities without written permission from Owner and approval of authorities having jurisdiction.
2. Notify the Owner not less than 72 hours in advance of activities that will affect Owner's operations.

B. Owner Limited Occupancy of Completed Areas of Construction: Owner reserves the right to occupy and to place and install equipment in completed portions of the Work, prior to Substantial Completion of the Work, provided such occupancy does not interfere with completion of the Work. Such placement of equipment and limited occupancy shall not constitute acceptance of the total Work.

1. Engineer will prepare a Certificate of Substantial Completion for each specific portion of the Work to be occupied prior to Owner acceptance of the completed Work.
2. Obtain a Certificate of Occupancy from authorities having jurisdiction before limited Owner occupancy.
3. Before limited Owner occupancy, mechanical and electrical systems shall be fully operational, and required tests and inspections shall be successfully completed. On occupancy, Owner will operate and maintain mechanical and electrical systems serving occupied portions of Work.
4. On occupancy, Owner will assume responsibility for maintenance and custodial service for occupied portions of Work.

1.7 WORK RESTRICTIONS

A. Work Restrictions, General: Comply with restrictions on construction operations.

1. Comply with limitations on use of public streets and other requirements of authorities having jurisdiction.

B. On-Site Work Hours: Limit work in the existing building to normal business working hours of 7:30 a.m. to 4:30 p.m., Monday through Friday, except as otherwise indicated.

1. Weekend Hours: As approved by Owner.
2. Early Morning Hours: As approved by Owner.
3. Hours for Utility Shutdowns: As approved by Owner.
4. Hours for noisy activity: As approved by Owner.

C. Existing Utility Interruptions: Do not interrupt utilities serving facilities occupied by Owner or others unless permitted under the following conditions and then only after providing temporary utility services according to requirements indicated:

1. Notify Owner not less than two days in advance of proposed utility interruptions.
2. Obtain Owner's written permission before proceeding with utility interruptions.

D. Noise, Vibration, and Odors: Coordinate operations that may result in high levels of noise and vibration, odors, or other disruption to Owner occupancy with Owner.

1. Notify Owner not less than two days in advance of proposed disruptive operations.
2. Obtain Owner's written permission before proceeding with disruptive operations.

E. Nonsmoking Building: Smoking is not permitted within the building or within 25 feet (8 m) of entrances, operable windows, or outdoor air intakes.

F. Controlled Substances: Use of tobacco products and other controlled substances within the existing building or on the Project site is not permitted.

G. Employee Identification: Provide identification tags for Contractor personnel working on the Project site. Require personnel to utilize identification tags at all times.

H. Employee Screening: Comply with Owner's requirements regarding drug and background screening of Contractor personnel working on the Project site. Should the Owner perform background checks on all employees working on the site. Contractor must provide required information to the Owner to allow proper background checks.

1. Maintain list of approved screened personnel with Owner's Representative.

1.8 SPECIFICATION AND DRAWING CONVENTIONS

A. Specification Content: The Specifications use certain conventions for the style of language and the intended meaning of certain terms, words, and phrases when used in particular situations. These conventions are as follows:

1. Imperative mood and streamlined language are generally used in the Specifications. The words "shall," "shall be," or "shall comply with," depending on the context, are implied where a colon (:) is used within a sentence or phrase.
2. Specification requirements are to be performed by Contractor unless specifically stated otherwise.

B. Division 01 General Requirements: Requirements of Sections in Division 01 apply to the Work of all Sections in the Specifications.

C. Drawing Coordination: Requirements for materials and products identified on the Drawings are described in detail in the Specifications. One or more of the following are used on the Drawings to identify materials and products:

1. Terminology: Materials and products are identified by the typical generic terms used in the individual Specifications Sections.
2. Abbreviations: Materials and products are identified by abbreviations published as part of the U.S. National CAD Standard and scheduled on Drawings.
3. Keynoting: Materials and products are identified by reference keynotes referencing Specification Section numbers found in this Project Manual.

PART 2 - PRODUCTS (Not Used)

PART 3 - EXECUTION (Not Used)

END OF SECTION 01100

SECTION 011400 - WORK RESTRICTIONS

PART 1 - GENERAL

1.1 RELATED DOCUMENTS

A. Drawings and general provisions of the Contract, including General and Supplementary Conditions and other Division 01 Specification Sections, apply to this Section.

1.2 USE OF PREMISES

A. Use of Site: Limit use of premises to work in areas indicated. Do not disturb portions of site beyond areas in which the Work is indicated.

1. Limits: Confine constructions operations to existing boiler room, roof, and adjacent site.
2. Owner Occupancy: Allow for Owner occupancy of site.
3. Driveways and Entrances: Keep driveways and entrances serving premises clear and available to Owner, Owner's employees, and emergency vehicles at all times. Do not use these areas for parking or storage of materials.

    a. Schedule deliveries to minimize use of driveways and entrances.
    b. Schedule deliveries to minimize space and time requirements for storage of materials and equipment on-site.

B. Use of Existing Building: Maintain existing building in a weathertight condition throughout construction period. Repair damage caused by construction operations. Protect building and its occupants during construction period.

1.3 OCCUPANCY REQUIREMENTS

A. Full Owner Occupancy: Owner will occupy site and existing building during entire construction period. Cooperate with Owner during construction operations to minimize conflicts and facilitate Owner usage. Perform the Work so as not to interfere with Owner's operations.

B. Do not perform any crane work while staff/students/teachers are in the building.

PART 2 - PRODUCTS (Not Used)

PART 3 - EXECUTION (Not Used)

END OF SECTION 011400

SECTION 012500 - SUBSTITUTION PROCEDURES

PART 1 - GENERAL

1.1 RELATED DOCUMENTS

A. Drawings and general provisions of the Contract, including General and Supplementary Conditions and other Division 01 Specification Sections, apply to this Section.

1.2 SUMMARY

A. Section includes administrative and procedural requirements for substitutions.

B. Related Sections:
1. Division 01 Section "Product Requirements" for requirements for submitting comparable product submittals for products by listed manufacturers.
2. Divisions 02 through 28 Sections for specific requirements and limitations for substitutions.

1.3 DEFINITIONS

A. Substitutions: Changes in products, materials, equipment, and methods of construction from those required by the Contract Documents and proposed by Contractor.

1. Substitutions for Cause: Changes proposed by Contractor that are required due to changed Project conditions, such as unavailability of product, regulatory changes, or unavailability of required warranty terms.
2. Substitutions for Convenience: Changes proposed by Contractor or Owner that are not required in order to meet other Project requirements but may offer advantage to Contractor or Owner.

1.4 SUBMITTALS

A. Substitution Requests: Submit three copies of each request for consideration. Identify product or fabrication or installation method to be replaced. Include Specification Section number and title and Drawing numbers and titles.

1. Substitution Request Form: Use CSI Form 13.1A.
2. Documentation: Show compliance with requirements for substitutions and the following, as applicable:

a. Statement indicating why specified product or fabrication or installation cannot be provided, if applicable.
b. Coordination information, including a list of changes or modifications needed to other parts of the Work and to construction performed by Owner and separate contractors, that will be necessary to accommodate proposed substitution.

c. Detailed comparison of significant qualities of proposed substitution with those of the Work specified. Include annotated copy of applicable specification section. Significant qualities may include attributes such as performance, weight, size, durability, visual effect, sustainable design characteristics, warranties, and specific features and requirements indicated. Indicate deviations, if any, from the Work specified.
d. Product Data, including drawings and descriptions of products and fabrication and installation procedures.
e. Samples, where applicable or requested.
f. Certificates and qualification data, where applicable or requested.
g. List of similar installations for completed projects with project names and addresses and names and addresses of Engineers and owners.
h. Material test reports from a qualified testing agency indicating and interpreting test results for compliance with requirements indicated.
i. Research reports evidencing compliance with building code in effect for Project, from ICC-ES.
j. Detailed comparison of Contractor's construction schedule using proposed substitution with products specified for the Work, including effect on the overall Contract Time. If specified product or method of construction cannot be provided within the Contract Time, include letter from manufacturer, on manufacturer's letterhead, stating date of receipt of purchase order, lack of availability, or delays in delivery.
k. Cost information, including a proposal of change, if any, in the Contract Sum.
l. Contractor's certification that proposed substitution complies with requirements in the Contract Documents except as indicated in substitution request, is compatible with related materials, and is appropriate for applications indicated.
m. Contractor's waiver of rights to additional payment or time that may subsequently become necessary because of failure of proposed substitution to produce indicated results.

3. Engineer's Action: If necessary, Engineer will request additional information or documentation for evaluation within seven days of receipt of a request for substitution. Engineer will notify Contractor of acceptance or rejection of proposed substitution within 15 days of receipt of request, or seven days of receipt of additional information or documentation, whichever is later.

a. Forms of Acceptance: Change Order, Construction Change Directive, or Engineer's Supplemental Instructions for minor changes in the Work.
b. Use product specified if Engineer does not issue a decision on use of a proposed substitution within time allocated.

1.5 QUALITY ASSURANCE

A. Compatibility of Substitutions: Investigate and document compatibility of proposed substitution with related products and materials. Engage qualified testing agency to perform compatibility tests recommended by manufacturers.

1.6 PROCEDURES

A. Coordination: Modify or adjust affected work as necessary to integrate work of the approved substitutions.

PART 2 - PRODUCTS

2.1 SUBSTITUTIONS

A. Substitutions for Cause: Submit requests for substitution immediately upon discovery of need for change, but not later than 15 days prior to time required for preparation and review of related submittals.

1. Conditions: Engineer will consider Contractor's request for substitution when the following conditions are satisfied. If the following conditions are not satisfied, Engineer will return requests without action, except to record noncompliance with these requirements:

a. Requested substitution is consistent with the Contract Documents and will produce indicated results.
b. Substitution request is fully documented and properly submitted.
c. Requested substitution will not adversely affect Contractor's construction schedule.
d. Requested substitution has received necessary approvals of authorities having jurisdiction.
e. Requested substitution is compatible with other portions of the Work.
f. Requested substitution has been coordinated with other portions of the Work.
g. Requested substitution provides specified warranty.
h. If requested substitution involves more than one contractor, requested substitution has been coordinated with other portions of the Work, is uniform and consistent, is compatible with other products, and is acceptable to all contractors involved.

B. Substitutions for Convenience: Not allowed.

PART 3 - EXECUTION (Not Used)

END OF SECTION 012500

Advancement of Construction Technology

SUBSTITUTION REQUEST
(After the Bidding Phase)

Project: _____ Substitution Request Number: _____

_____ From: _____

To: _____ Date: _____

_____ A/E Project Number: _____

Re: _____ Contract For: _____

Specification Title: _____ Description: _____

Section: _____ Page: _____ Article/Paragraph: _____

Proposed Substitution: _____

Manufacturer: _____ Address: _____ Phone: _____

Trade Name: _____ Model No.: _____

Installer: _____ Address: _____ Phone: _____

History: ☐ New product ☐ 2-5 years old ☐ 5-10 yrs old ☐ More than 10 years old

Differences between proposed substitution and specified product: _____

_____

_____

☐ Point-by-point comparative data attached - REQUIRED BY A/E

Reason for not providing specified item: _____

_____

Similar Installation:

Project: _____ Architect: _____

Address: _____ Owner: _____

_____ Date Installed: _____

Proposed substitution affects other parts of Work: ☐ No ☐ Yes; explain _____

_____

Savings to Owner for accepting substitution: _____ ($ _____).

Proposed substitution changes Contract Time: ☐ No ☐ Yes [Add] [Deduct] _____days.

Supporting Data Attached: ☐ Drawings ☐ Product Data ☐ Samples ☐ Tests ☐ Reports ☐ _____

Copyright 1996, Construction Specification Institute,
601 Madison Street, Alexandria, VA 22314-1791

SUBSTITUTION REQUEST
(Continued)

The Undersigned certifies:

- Proposed substitution has been fully investigated and determined to be equal or superior in all respects to specified product.
- Same warranty will be furnished for proposed substitution as for specified product.
- Same maintenance service and source of replacement parts, as applicable, is available.
- Proposed substitution will have no adverse effect on other trades and will not affect or delay progress schedule.
- Cost data as stated above is complete. Claims for additional costs related to accepted substitution which may subsequently become apparent are to be waived.
- Proposed substitution does not affect dimensions and functional clearances.
- Payment will be made for changes to building design, including A/E design, detailing, and construction costs caused by the substitution.
- Coordination, installation, and changes in the Work as necessary for accepted substitution will be complete in all respects.

Submitted by: _____

Signed by: _____

Firm: _____

Address: _____

_____

Telephone: _____

Attachments: _____

_____

_____

_____

A/E's REVIEW AND ACTION

☐ Substitution approved - Make submittals in accordance with Specification Section 01330.
☐ Substitution approved as noted - Make submittals in accordance with Specification Section 01330.
☐ Substitution rejected - Use specified materials.
☐ Substitution Request received too late - Use specified materials.

Signed by: Date:

Additional Comments: ☐ Contractor ☐ Subcontractor ☐ Supplier ☐ Manufacturer ☐ A/E ☐ _____

_____

_____

_____

_____

_____

_____

_____

Copyright 1996, Construction Specification Institute,
601 Madison Street, Alexandria, VA 22314-1791

SECTION 012600 - CONTRACT MODIFICATION PROCEDURES

PART 1 - GENERAL

1.1 RELATED DOCUMENTS

A. Drawings and general provisions of the Contract, including General and Supplementary Conditions and other Division 01 Specification Sections, apply to this Section.

1.2 SUMMARY

A. Section includes administrative and procedural requirements for handling and processing Contract modifications.

B. Related Sections:

1. Division 01 Section "Product Requirements" for administrative procedures for handling requests for substitutions made after Contract award.

1.3 MINOR CHANGES IN THE WORK

A. Engineer will issue supplemental instructions authorizing minor changes in the Work, not involving adjustment to the Contract Sum or the Contract Time, on AIA Document G710, "Architect's Supplemental Instructions." form included in the Project Manual.

1.4 PROPOSAL REQUESTS

A. Owner-Initiated Proposal Requests: Engineer will issue a detailed description of proposed changes in the Work that may require adjustment to the Contract Sum or the Contract Time. If necessary, the description will include supplemental or revised Drawings and Specifications.

1. Proposal Requests issued by Engineer are not instructions either to stop work in progress or to execute the proposed change.
2. Within time specified in Proposal Request after receipt of Proposal Request, submit a quotation estimating cost adjustments to the Contract Sum and the Contract Time necessary to execute the change.

a. Include a list of quantities of products required or eliminated and unit costs, with total amount of purchases and credits to be made. If requested, furnish survey data to substantiate quantities.
b. Indicate applicable taxes, delivery charges, equipment rental, and amounts of trade discounts.
c. Include costs of labor and supervision directly attributable to the change.
d. Include an updated Contractor's construction schedule that indicates the effect of the change, including, but not limited to, changes in activity duration, start and

finish times, and activity relationship. Use available total float before requesting an extension of the Contract Time.

e. Quotation Form: Use forms acceptable to Engineer.

B. Contractor-Initiated Proposals: If latent or changed conditions require modifications to the Contract, Contractor may initiate a claim by submitting a request for a change to Engineer.

1. Include a statement outlining reasons for the change and the effect of the change on the Work. Provide a complete description of the proposed change. Indicate the effect of the proposed change on the Contract Sum and the Contract Time.
2. Include a list of quantities of products required or eliminated and unit costs, with total amount of purchases and credits to be made. If requested, furnish survey data to substantiate quantities.
3. Indicate applicable taxes, delivery charges, equipment rental, and amounts of trade discounts.
4. Include costs of labor and supervision directly attributable to the change.
5. Include an updated Contractor's construction schedule that indicates the effect of the change, including, but not limited to, changes in activity duration, start and finish times, and activity relationship. Use available total float before requesting an extension of the Contract Time.
6. Comply with requirements in Division 01 Section "Substitution Procedures" if the proposed change requires substitution of one product or system for product or system specified.
7. Proposal Request Form: Use form acceptable to Engineer.

1.5 CHANGE ORDER PROCEDURES

A. On Owner's approval of a Proposal Request, Engineer will issue a Change Order for signatures of Owner and Contractor on AIA Document G701 form included in Project Manual.

1.6 CONSTRUCTION CHANGE DIRECTIVE

A. Construction Change Directive: Engineer may issue a Construction Change Directive on AIA Document G714. Construction Change Directive instructs Contractor to proceed with a change in the Work, for subsequent inclusion in a Change Order.

1. Construction Change Directive contains a complete description of change in the Work. It also designates method to be followed to determine change in the Contract Sum or the Contract Time.

B. Documentation: Maintain detailed records on a time and material basis of work required by the Construction Change Directive.

1. After completion of change, submit an itemized account and supporting data necessary to substantiate cost and time adjustments to the Contract.

PART 2 - PRODUCTS (Not Used)

PART 3 - EXECUTION (Not Used)

END OF SECTION 012600

ARCHITECT'S SUPPLEMENTAL INSTRUCTIONS

AIA DOCUMENT G710 - ELECTRONIC FORMAT

OWNER ☐
ARCHITECT ☐
CONSULTANT ☐
CONTRACTOR ☐
FIELD ☐
OTHER ☐

THIS DOCUMENT HAS IMPORTANT LEGAL CONSEQUENCES; CONSULTATION WITH AN ATTORNEY IS ENCOURAGED WITH RESPECT TO ITS COMPLETION OR MODIFICATION. AUTHENTICATION OF THIS ELECTRONICALLY DRAFTED AIA DOCUMENT MAY BE MADE BY USING AIA DOCUMENT D401.

PROJECT:
(Name, address)

ARCHITECT'S SUPPLEMENTAL INSTRUCTION NO:

OWNER:

ARCHITECT:

TO:
(Contractor)

CONTRACT FOR:

ARCHITECT'S PROJECT NO:

CONTRACT DATED:

The Work shall be carried out in accordance with the following supplemental instructions issued in accordance with the Contract Documents without change in Contract Sum or Contract Time. Proceeding with the Work in accordance with these instructions indicates your acknowledgment that there will be no change in the Contract Sum or Contract Time.

Description:

Attachments:
(Here insert listing of documents that support description.)

ISSUED BY:

Architect

© 1992 THE AMERICAN INSTITUTE OF ARCHITECTS, 1735 NEW YORK AVENUE, N.W., WASHINGTON, D.C. 20006-5292. AIA DOCUMENT G710 - ARCHITECT'S SUPPLEMENTAL INSTRUCTIONS - 1992 EDITION - AIA® - WARNING: Unlicensed photocopying violates U.S. copyright laws and will subject the violator to legal prosecution. This document was electronically produced with permission of the AIA and can be reproduced in accordance with your license without violation until the date of expiration as noted below.
This document is not an original AIA® Contract Document, but a reproduction produced by AIA® Contract Documents software for administrative purposes only and is not for other use or resale.

PROPOSAL REQUEST

AIA DOCUMENT G709 - ELECTRONIC FORMAT

OWNER ☐
ARCHITECT ☐
CONSULTANT ☐
CONTRACTOR ☐
FIELD ☐
OTHER ☐

THIS DOCUMENT HAS IMPORTANT LEGAL CONSEQUENCES; CONSULTATION WITH AN ATTORNEY IS ENCOURAGED WITH RESPECT TO ITS COMPLETION OR MODIFICATION. AUTHENTICATION OF THIS ELECTRONICALLY DRAFTED AIA DOCUMENT MAY BE MADE BY USING AIA DOCUMENT D401.

PROJECT:
(Name and address)

PROPOSAL REQUEST NO.:

DATE OF ISSUANCE:

OWNER:
(Name and address)

CONTRACT FOR:

CONTRACT DATED:

ARCHITECT'S PROJECT NO.:

TO CONTRACTOR:
(Name and address)

ARCHITECT:
(Name and address)

Please submit an itemized proposal for changes in the Contract Sum and Contract Time for proposed modifications to the Contract Documents described herein. Submit proposal within days, or notify the Architect in writing of the date on which you anticipate submitting your proposal.

THIS IS NOT A CHANGE ORDER, A CONSTRUCTION CHANGE DIRECTIVE OR A DIRECTION TO PROCEED WITH THE WORK DESCRIBED IN THE PROPOSED MODIFICATIONS.

Description:
(Insert a written description of the Work.)

Attachments:
(List attached documents that support description.)

REQUESTED BY:

(Signature)

(Printed name and title)

© 1993 THE AMERICAN INSTITUTE OF ARCHITECTS, 1735 NEW YORK AVENUE, N.W., WASHINGTON, D.C. 20006-5292. AIA DOCUMENT G709 - PROPOSAL REQUEST - 1993 EDITION - AIA® - WARNING: Unlicensed photocopying violates U.S. copyright laws and is subject to legal prosecution. This document was electronically produced with permission of the AIA and can be reproduced in accordance with your license without violation until the date of expiration as noted below.
This document is not an original AIA® Contract Document, but a reproduction produced by AIA® Contract Documents software for administrative purposes only and is not for other use or resale.

AIA® Document G701™ – 2001

Change Order

PROJECT *(Name and address)*:	CHANGE ORDER NUMBER: 001	OWNER: ☐
	DATE:	ARCHITECT: ☐
TO CONTRACTOR *(Name and address)*:	ARCHITECT'S PROJECT NUMBER:	CONTRACTOR: ☐
	CONTRACT DATE:	FIELD: ☐
	CONTRACT FOR: General Construction	OTHER: ☐

THE CONTRACT IS CHANGED AS FOLLOWS:
(Include, where applicable, any undisputed amount attributable to previously executed Construction Change Directives)

The original Contract Sum was	$	0.00
The net change by previously authorized Change Orders	$	0.00
The Contract Sum prior to this Change Order was	$	0.00
The Contract Sum will be increased by this Change Order in the amount of	$	0.00
The new Contract Sum including this Change Order will be	$	0.00

The Contract Time will be increased by Zero (0) days.
The date of Substantial Completion as of the date of this Change Order therefore is

NOTE: This Change Order does not include changes in the Contract Sum, Contract Time or Guaranteed Maximum Price which have been authorized by Construction Change Directive until the cost and time have been agreed upon by both the Owner and Contractor, in which case a Change Order is executed to supersede the Construction Change Directive.

NOT VALID UNTIL SIGNED BY THE ARCHITECT, CONTRACTOR AND OWNER.

ARCHITECT *(Firm name)*	CONTRACTOR *(Firm name)*	OWNER *(Firm name)*
ADDRESS	ADDRESS	ADDRESS
BY *(Signature)*	BY *(Signature)*	BY *(Signature)*
(Typed name)	*(Typed name)*	*(Typed name)*
DATE	DATE	DATE

AIA Document G701™ – 2001. Copyright © 1979, 1987, 2000 and 2001 by The American Institute of Architects. All rights reserved. WARNING: This AIA® Document is protected by U.S. Copyright Law and International Treaties. Unauthorized reproduction or distribution of this AIA® Document, or any portion of it, may result in severe civil and criminal penalties, and will be prosecuted to the maximum extent possible under the law. This document was produced by AIA software at 14:37:48 on 02/23/2006 under Order No.1000216502_1 which expires on 3/6/2007, and is not for resale.
User Notes: (3604202474)

CONSTRUCTION CHANGE DIRECTIVE

AIA DOCUMENT G714 - ELECTRONIC FORMAT

(This document replaces AIA Document G713, Construction Change Authorization.)

OWNER	☐
ARCHITECT	☐
CONTRACTOR	☐
FIELD	☐
OTHER	☐

THIS DOCUMENT HAS IMPORTANT LEGAL CONSEQUENCES; CONSULTATION WITH AN ATTORNEY IS ENCOURAGED WITH RESPECT TO ITS COMPLETION OR MODIFICATION. AUTHENTICATION OF THIS ELECTRONICALLY DRAFTED AIA DOCUMENT MAY BE MADE BY USING AIA DOCUMENT D401.

PROJECT:
(Name, address)

TO CONTRACTOR:
(Name, address)

DIRECTIVE NO.:

DATE:

ARCHITECT'S PROJECT NO:

CONTRACT DATED:

CONTRACT FOR:

You are hereby directed to make the following change(s) in this Contract:

PROPOSED ADJUSTMENTS

1. The proposed basis of adjustment to the Contract Sum or Guaranteed Maximum Price is:
   [ ] Lump Sum (increase) (decrease) of $
   [ ] Unit Price of $ per
   [ ] as provided in Subparagraph 7.3.6 of AIA Document A201, 1987 edition.
   [ ] as follows:

2. The Contract Time is proposed to (be adjusted) (remain unchanged). The proposed adjustment, if any, is (an increase of days) (a decrease of days).

When signed by the Owner and Architect and received by the Contractor, this document becomes effective IMMEDIATELY as a Construction Change Directive (CCD), and the Contractor shall proceed with the change(s) described above.

Signature by the Contractor indicates the Contractor's agreement with the proposed adjustments in Contract Sum and Contract Time set forth in this Construction Change Directive.

ARCHITECT	OWNER	CONTRACTOR
Address	Address	Address
BY:	BY:	BY:
DATE:	DATE:	DATE:

© 1987 THE AMERICAN INSTITUTE OF ARCHITECTS, 1735 NEW YORK AVENUE, N.W., WASHINGTON, D.C. 20006-5292. AIA DOCUMENT G714 - CONSTRUCTION CHANGE DIRECTIVE - 1987 EDITION - AIA® - WARNING: Unlicensed photocopying violates U.S. copyright laws and will subject the violator to legal prosecution. This document was electronically produced with permission of the AIA and can be reproduced in accordance with your license without violation until the date of expiration as noted below.
This document is not an original AIA® Contract Document, but a reproduction produced by AIA® Contract Documents software for administrative purposes only and is not for other use or resale.

CONSTRUCTION CHANGE DIRECTIVE

AIA DOCUMENT G714 - ELECTRONIC FORMAT

(This document replaces AIA Document G713, Construction Change Authorization.)

OWNER	☐
ARCHITECT	☐
CONTRACTOR	☐
FIELD	☐
OTHER	☐

THIS DOCUMENT HAS IMPORTANT LEGAL CONSEQUENCES; CONSULTATION WITH AN ATTORNEY IS ENCOURAGED WITH RESPECT TO ITS COMPLETION OR MODIFICATION. AUTHENTICATION OF THIS ELECTRONICALLY DRAFTED AIA DOCUMENT MAY BE MADE BY USING AIA DOCUMENT D401.

PROJECT:
(Name, address)

TO CONTRACTOR:
(Name, address)

DIRECTIVE NO.:

DATE:

ARCHITECT'S PROJECT NO:

CONTRACT DATED:

CONTRACT FOR:

You are hereby directed to make the following change(s) in this Contract:

PROPOSED ADJUSTMENTS

1. The proposed basis of adjustment to the Contract Sum or Guaranteed Maximum Price is:
   [ ] Lump Sum (increase) (decrease) of $
   [ ] Unit Price of $ per
   [ ] as provided in Subparagraph 7.3.6 of AIA Document A201, 1987 edition.
   [ ] as follows:

2. The Contract Time is proposed to (be adjusted) (remain unchanged). The proposed adjustment, if any, is (an increase of days) (a decrease of days).

When signed by the Owner and Architect and received by the Contractor, this document becomes effective IMMEDIATELY as a Construction Change Directive (CCD), and the Contractor shall proceed with the change(s) described above.

Signature by the Contractor indicates the Contractor's agreement with the proposed adjustments in Contract Sum and Contract Time set forth in this Construction Change Directive.

ARCHITECT	OWNER	CONTRACTOR
Address	Address	Address
BY:	BY:	BY:
DATE:	DATE:	DATE:

© 1987 THE AMERICAN INSTITUTE OF ARCHITECTS, 1735 NEW YORK AVENUE, N.W., WASHINGTON, D.C. 20006-5292. AIA DOCUMENT G714 - CONSTRUCTION CHANGE DIRECTIVE - 1987 EDITION - AIA® - WARNING: Unlicensed photocopying violates U.S. copyright laws and will subject violator to legal prosecution. This document was electronically produced with permission of the AIA and can be reproduced in accordance with your license without violation until the date of expiration as noted below.

This document is not an original AIA® Contract Document, but a reproduction produced by AIA® Contract Documents software for administrative purposes only and is not for other use or resale.

SECTION 012900 - PAYMENT PROCEDURES

PART 1 - GENERAL

1.1 RELATED DOCUMENTS

A. Drawings and general provisions of the Contract, including General and Supplementary Conditions and other Division 01 Specification Sections, apply to this Section.

1.2 SUMMARY

A. This Section specifies administrative and procedural requirements necessary to prepare and process Applications for Payment.

B. Related Sections:

1. Division 01 Section "Contract Modification Procedures" for administrative procedures for handling changes to the Contract.
2. Division 01 Section "Construction Progress Documentation" for administrative requirements governing the preparation and submittal of Contractor's construction schedule.
3. Division 01 Section "Submittal Procedures" for administrative requirements governing the preparation and submittal of submittal schedule.

1.3 DEFINITIONS

A. Schedule of Values: A statement furnished by Contractor allocating portions of the Contract Sum to various portions of the Work and used as the basis for reviewing Contractor's Applications for Payment.

1.4 SCHEDULE OF VALUES

A. Coordination: Coordinate preparation of the schedule of values with preparation of Contractor's construction schedule. Cost-loaded Critical Path Method Schedule may serve to satisfy requirements for the schedule of values.

1. Correlate line items in the schedule of values with other required administrative forms and schedules, including the following:

   a. Application for Payment forms with continuation sheets.
   b. Submittal schedule.
   c. Items required to be indicated as separate activities in Contractor's construction schedule.

2. Submit the schedule of values to Engineer at earliest possible date but no later than seven days before the date scheduled for submittal of initial Applications for Payment.

3. Subschedules for Phased Work: Where the Work is separated into phases requiring separately phased payments, provide subschedules showing values correlated with each phase of payment.
4. Subschedules for Separate Elements of Work: Where the Contractor's construction schedule defines separate elements of the Work, provide subschedules showing values correlated with each element.

B. Format and Content: Use the Project Manual table of contents as a guide to establish line items for the schedule of values. Provide at least one line item for each Specification Section.

1. Identification: Include the following Project identification on the schedule of values:

   a. Project name and location.
   b. Name of Engineer.
   c. Engineer's project number.
   d. Contractor's name and address.
   e. Date of submittal.

2. Arrange schedule of values consistent with format of AIA Document G703.
3. Arrange the schedule of values in tabular form with separate columns to indicate the following for each item listed:

   a. Related Specification Section or Division.
   b. Description of the Work.
   c. Name of subcontractor.
   d. Name of manufacturer or fabricator.
   e. Name of supplier.
   f. Change Orders (numbers) that affect value.
   g. Dollar value of the following, as a percentage of the Contract Sum to nearest one-hundredth percent, adjusted to total 100 percent.

      1) Labor.
      2) Materials.
      3) Equipment.

4. Provide a breakdown of the Contract Sum in enough detail to facilitate continued evaluation of Applications for Payment and progress reports. Coordinate with the Project Manual table of contents. Provide multiple line items for principal subcontract amounts in excess of five percent of Contract Sum.

   a. Include separate line items under Contractor and principal subcontracts for project closeout requirements in an amount totaling five percent of the Contract Sum and subcontract amount.

5. Round amounts to nearest whole dollar; total shall equal the Contract Sum.
6. Provide a separate line item in the schedule of values for each part of the Work where Applications for Payment may include materials or equipment purchased or fabricated and stored, but not yet installed.

   a. Differentiate between items stored on-site and items stored off-site. If required, include evidence of insurance.

7. Provide separate line items in the schedule of values for initial cost of materials, for each subsequent stage of completion, and for total installed value of that part of the Work.
8. Allowances: Provide a separate line item in the schedule of values for each allowance. Show line-item value of unit-cost allowances, as a product of the unit cost, multiplied by measured quantity. Use information indicated in the Contract Documents to determine quantities.
9. Purchase Contracts: Provide a separate line item in the schedule of values for each purchase contract. Show line-item value of purchase contract. Indicate owner payments or deposits, if any, and balance to be paid by Contractor.
10. Each item in the schedule of values and Applications for Payment shall be complete. Include total cost and proportionate share of general overhead and profit for each item.

    a. Temporary facilities and other major cost items that are not direct cost of actual work-in-place may be shown either as separate line items in the schedule of values or distributed as general overhead expense, at Contractor's option.

11. Schedule Updating: Update and resubmit the schedule of values before the next Applications for Payment when Change Orders or Construction Change Directives result in a change in the Contract Sum.

1.5 APPLICATIONS FOR PAYMENT

A. Each Application for Payment shall be consistent with previous applications and payments as certified by Engineer and paid for by Owner.

    1. Initial Application for Payment, Application for Payment at time of Substantial Completion, and final Application for Payment involve additional requirements.

B. Payment Application Times: The date for each progress payment is indicated in the Agreement between Owner and Contractor. The period of construction work covered by each Application for Payment is the period indicated in the Agreement.

C. Payment Application Times: Progress payments shall be submitted to Engineer by the 21st of the month. The period covered by each Application for Payment is one month, ending on the last day of the month.

    1. Submit draft copy of Application for Payment seven days prior to due date for review by Engineer.

D. Application for Payment Forms: Use AIA Document G702 and AIA Document G703 as form for Applications for Payment.

E. Application Preparation: Complete every entry on form. Notarize and execute by a person authorized to sign legal documents on behalf of Contractor. Engineer will return incomplete applications without action.

    1. Entries shall match data on the schedule of values and Contractor's construction schedule. Use updated schedules if revisions were made.

2. Include amounts for work completed following previous Application for Payment, whether or not payment has been received. Include only amounts for work completed at time of Application for Payment.
3. Include amounts of Change Orders and Construction Change Directives issued before last day of construction period covered by application.
4. Indicate separate amounts for work being carried out under Owner-requested project acceleration.

F. Stored Materials: Include in Application for Payment amounts applied for materials or equipment purchased or fabricated and stored, but not yet installed. Differentiate between items stored on-site and items stored off-site.

1. Provide certificate of insurance, evidence of transfer of title to Owner, and consent of surety to payment, for stored materials.
2. Provide supporting documentation that verifies amount requested, such as paid invoices. Match amount requested with amounts indicated on documentation; do not include overhead and profit on stored materials.
3. Provide summary documentation for stored materials indicating the following:

    a. Materials previously stored and included in previous Applications for Payment.
    b. Work completed for this Application utilizing previously stored materials.
    c. Additional materials stored with this Application.
    d. Total materials remaining stored, including materials with this Application.

G. Transmittal: Submit three signed and notarized original copies of each Application for Payment to Engineer by a method ensuring receipt within 24 hours. One copy shall include waivers of lien and similar attachments if required.

1. Transmit each copy with a transmittal form listing attachments and recording appropriate information about application.

H. Waivers of Mechanic's Lien: With each Application for Payment, submit waivers of mechanic's lien from entities lawfully entitled to file a mechanic's lien arising out of the Contract and related to the Work covered by the payment.

1. Submit partial waivers on each item for amount requested in previous application, after deduction for retainage, on each item.
2. When an application shows completion of an item, submit conditional final or full waivers.
3. Owner reserves the right to designate which entities involved in the Work must submit waivers.
4. Waiver Forms: Submit waivers of lien on forms, executed in a manner acceptable to Owner.

I. Waivers of Mechanic's Lien: With each Application for Payment, submit waivers of mechanic's liens from subcontractors, sub-subcontractors, and suppliers for construction period covered by the previous application.

1. Submit partial waivers on each item for amount requested in previous application, after deduction for retainage, on each item.

2. When an application shows completion of an item, submit conditional final or full waivers.
3. Owner reserves the right to designate which entities involved in the Work must submit waivers.
4. Submit final Application for Payment with or preceded by conditional final waivers from every entity involved with performance of the Work covered by the application who is lawfully entitled to a lien.
5. Waiver Forms: Submit waivers of lien on forms, executed in a manner acceptable to Owner.

J. Initial Application for Payment: Administrative actions and submittals that must precede or coincide with submittal of first Application for Payment include the following:

1. List of subcontractors.
2. Schedule of values.
3. Contractor's construction schedule (preliminary if not final).
4. Combined Contractor's construction schedule (preliminary if not final) incorporating Work of multiple contracts, with indication of acceptance of schedule by each Contractor.
5. Products list (preliminary if not final).
6. Submittal schedule (preliminary if not final).
7. List of Contractor's staff assignments.
8. List of Contractor's principal consultants.
9. Copies of building permits.
10. Copies of authorizations and licenses from authorities having jurisdiction for performance of the Work.
11. Initial progress report.
12. Report of preconstruction conference.
13. Certificates of insurance and insurance policies.
14. Performance and payment bonds.
15. Data needed to acquire Owner's insurance.

K. Application for Payment at Substantial Completion: After issuing the Certificate of Substantial Completion, submit an Application for Payment showing 100 percent completion for portion of the Work claimed as substantially complete.

1. Include documentation supporting claim that the Work is substantially complete and a statement showing an accounting of changes to the Contract Sum.
2. This application shall reflect Certificates of Partial Substantial Completion issued previously for Owner occupancy of designated portions of the Work.

L. Final Payment Application: Submit final Application for Payment with releases and supporting documentation not previously submitted and accepted, including, but not limited, to the following:

1. Evidence of completion of Project closeout requirements.
2. Insurance certificates for products and completed operations where required and proof that taxes, fees, and similar obligations were paid.
3. Updated final statement, accounting for final changes to the Contract Sum.
4. AIA Document G706, "Contractor's Affidavit of Payment of Debts and Claims."
5. AIA Document G706A, "Contractor's Affidavit of Release of Liens."
6. AIA Document G707, "Consent of Surety to Final Payment."

7. Evidence that claims have been settled.
8. Final liquidated damages settlement statement.

PART 2 - PRODUCTS (Not Used)

PART 3 - EXECUTION (Not Used)

END OF SECTION 012900

AIA® Document G702™ – 1992

Application and Certificate for Payment

TO OWNER:	**PROJECT:** MASTER FORMS	**APPLICATION NO:** 001	**Distribution to:**
		PERIOD TO:	OWNER: ☐
		CONTRACT FOR: General Construction	ARCHITECT: ☐
FROM CONTRACTOR:	**VIA ARCHITECT:**	**CONTRACT DATE:**	CONTRACTOR: ☐
		PROJECT NOS: / /	FIELD: ☐
			OTHER: ☐

CONTRACTOR'S APPLICATION FOR PAYMENT

Application is made for payment, as shown below, in connection with the Contract.
Continuation Sheet, AIA Document G703, is attached.

1. **ORIGINAL CONTRACT SUM** ..... $ 0.00
2. **Net change by Change Orders** ..... $ 0.00
3. **CONTRACT SUM TO DATE** (Line 1 ± 2) ..... $ 0.00
4. **TOTAL COMPLETED & STORED TO DATE** (Column G on G703) ..... $ 0.00
5. **RETAINAGE:**
   a. 0 % of Completed Work (Column D + E on G703) $ 0.00
   b. 0 % of Stored Material (Column F on G703) $ 0.00
   Total Retainage (Lines 5a + 5b or Total in Column I of G703) ..... $ 0.00
6. **TOTAL EARNED LESS RETAINAGE** ..... $ 0.00
   (Line 4 Less Line 5 Total)
7. **LESS PREVIOUS CERTIFICATES FOR PAYMENT** ..... $ 0.00
   (Line 6 from prior Certificate)
8. **CURRENT PAYMENT DUE** ..... $ 0.00
9. **BALANCE TO FINISH, INCLUDING RETAINAGE**
   (Line 3 less Line 6) $ 0.00

CHANGE ORDER SUMMARY	ADDITIONS	DEDUCTIONS
Total changes approved in previous months by Owner	$ 0.00	$ 0.00
Total approved this Month	$ 0.00	$ 0.00
TOTALS	$ 0.00	$ 0.00
NET CHANGES by Change Order	$	0.00

The undersigned Contractor certifies that to the best of the Contractor's knowledge, information and belief the Work covered by this Application for Payment has been completed in accordance with the Contract Documents, that all amounts have been paid by the Contractor for Work for which previous Certificates for Payment were issued and payments received from the Owner, and that current payment shown herein is now due.

CONTRACTOR:

By: _____ Date: _____

State of:

County of:

Subscribed and sworn to before me this day of

Notary Public:

My Commission expires:

ARCHITECT'S CERTIFICATE FOR PAYMENT

In accordance with the Contract Documents, based on on-site observations and the data comprising this application, the Architect certifies to the Owner that to the best of the Architect's knowledge, information and belief the Work has progressed as indicated, the quality of the Work is in accordance with the Contract Documents, and the Contractor is entitled to payment of the AMOUNT CERTIFIED.

AMOUNT CERTIFIED ..... $ 0.00

(Attach explanation if amount certified differs from the amount applied. Initial all figures on this Application and on the Continuation Sheet that are changed to conform with the amount certified.)

ARCHITECT:

By: _____ Date: _____

This Certificate is not negotiable. The AMOUNT CERTIFIED is payable only to the Contractor named herein. Issuance, payment and acceptance of payment are without prejudice to any rights of the Owner or Contractor under this Contract

AIA Document G702™ – 1992. Copyright © 1953, 1963, 1965, 1978 and 1992 by The American Institute of Architects. **All rights reserved.** WARNING: This AIA® Document is protected by U.S. Copyright Law and International Treaties. Unauthorized reproduction or distribution of this AIA® Document, or any portion of it, may result in severe civil and criminal penalties, and will be prosecuted to the maximum extent possible under the law. This document was produced by AIA software at 15:42:26 on 05/04/2006 under Order No.1000216502_1 which expires on 3/6/2007, and is not for resale.
(1737352988)
User Notes:

AIA® Document G703™ – 1992

Continuation Sheet

AIA Document G702, APPLICATION AND CERTIFICATION FOR PAYMENT,
containing Contractor's signed certification is attached.
In tabulations below, amounts are stated to the nearest dollar.
Use Column I on Contracts where variable retainage for line items may apply.

APPLICATION NO: 001
APPLICATION DATE:
PERIOD TO:
ARCHITECT'S PROJECT NO:

A	B	C	D	E	F	G		H	I
			WORK COMPLETED						
ITEM NO.	DESCRIPTION OF WORK	SCHEDULED VALUE	FROM PREVIOUS APPLICATION (D + E)	THIS PERIOD	MATERIALS PRESENTLY STORED (NOT IN D OR E)	TOTAL COMPLETED AND STORED TO DATE (D+E+F)	% (G ÷ C)	BALANCE TO FINISH (C - G)	RETAINAGE (IF VARIABLE RATE)
	GRAND TOTAL	$ 0.00	$ 0.00	$ 0.00	$ 0.00	$ 0.00	0.00 %	$ 0.00	$ 0.00

AIA Document G703™ – 1992. Copyright © 1963, 1965, 1966, 1967,1970, 1978, 1983 and 1992 by The American Institute of Architects. **All rights reserved. WARNING: This AIA® Document is protected by U.S. Copyright Law and International Treaties. Unauthorized reproduction or distribution of this AIA® Document, or any portion of it, may result in severe civil and criminal penalties, and will be prosecuted to the maximum extent possible under the law.** This document was produced by AIA software at 08:40:51 on 05/04/2005 under Order No.1000167209_1 which expires on 3/7/2006, and is not for resale.
User ! (2131320776)

CONTRACTOR'S AFFIDAVIT OF PAYMENT OF DEBTS AND CLAIMS

AIA DOCUMENT G706 - ELECTRONIC FORMAT

OWNER ☐
ARCHITECT ☐
CONTRACTOR ☐
SURETY ☐
OTHER ☐

THIS DOCUMENT HAS IMPORTANT LEGAL CONSEQUENCES; CONSULTATION WITH AN ATTORNEY IS ENCOURAGED WITH RESPECT TO ITS COMPLETION OR MODIFICATION. AUTHENTICATION OF THIS ELECTRONICALLY DRAFTED AIA DOCUMENT MAY BE MADE BY USING AIA DOCUMENT D401.

TO OWNER:
(Name and address)

ARCHITECT'S PROJECT NO.:

PROJECT:
(Name and address)

CONTRACT FOR:

CONTRACT DATED:

STATE OF:
COUNTY OF:

The undersigned hereby certifies that, except as listed below, payment has been made in full and all obligations have otherwise been satisfied for all materials and equipment furnished, for all work, labor, and services performed, and for all known indebtedness and claims against the Contractor for damages arising in any manner in connection with the performance of the Contract referenced above for which the Owner or Owner's property might in any way be held responsible or encumbered.

EXCEPTIONS:

SUPPORTING DOCUMENTS ATTACHED HERETO:

1. Consent of Surety to Final Payment. Whenever Surety is involved, Consent of Surety is required. AIA Document G707, Consent of Surety, may be used for this purpose.

   Indicate attachment: ☐ yes ☐ no

The following supporting documents should be attached hereto if required by the Owner:

1. Contractor's Release or Waiver of Liens, conditional upon receipt of final payment.

2. Separate Releases or Waivers of Liens from Subcontractors and material and equipment suppliers, to the extent required by the Owner, accompanied by a list thereof.

3. Contractor's Affidavit of Release of Liens (AIA Document G706A).

CONTRACTOR:
(Name and address)

BY: _____
(Signature of authorized representative)

_____
(Printed name and title)

Subscribed and sworn to before me on this date:

_____

Notary Public: _____

© 1994 THE AMERICAN INSTITUTE OF ARCHITECTS, 1735 NEW YORK AVENUE, N.W., WASHINGTON, D.C. 20006-5292. AIA DOCUMENT G706 - CONTRACTOR'S AFFIDAVIT OF PAYMENT OF DEBTS AND CLAIMS - 1994 EDITION - AIA® - WARNING: Unlicensed photocopying violates U.S. copyright laws and will subject the violator to legal prosecution. This document was electronically produced with permission of the AIA and can be reproduced in accordance with your license without violation until the date of expiration as noted below.
This document is not an original AIA® Contract Document, but a reproduction produced by AIA® Contract Documents software for administrative purposes only and is not for other use or resale.

CONTRACTOR'S AFFIDAVIT OF RELEASE OF LIENS

AIA DOCUMENT G706A - ELECTRONIC FORMAT

OWNER ☐
ARCHITECT ☐
CONTRACTOR ☐
SURETY ☐
OTHER ☐

THIS DOCUMENT HAS IMPORTANT LEGAL CONSEQUENCES; CONSULTATION WITH AN ATTORNEY IS ENCOURAGED WITH RESPECT TO ITS COMPLETION OR MODIFICATION. AUTHENTICATION OF THIS ELECTRONICALLY DRAFTED AIA DOCUMENT MAY BE MADE BY USING AIA DOCUMENT D401.

TO OWNER:
(Name and address)

ARCHITECT'S PROJECT NO.:

PROJECT:
(Name and address)

CONTRACT FOR:

CONTRACT DATED:

STATE OF:
COUNTY OF:

The undersigned hereby certifies that to the best of the undersigned's knowledge, information and belief, except as listed below, the Releases or Waivers of Lien attached hereto include the Contractor, all Subcontractors, all suppliers of materials and equipment, and all performers of Work, labor or services who have or may have liens or encumbrances or the right to assert liens or encumbrances against any property of the Owner arising in any manner out of the performance of the Contract referenced above.

EXCEPTIONS:

SUPPORTING DOCUMENTS ATTACHED HERETO:

1. Contractor's Release or Waiver of Liens, conditional upon receipt of final payment.

2. Separate Releases or Waivers of Liens from Subcontractors and material and equipment suppliers, to the extent required by the Owner, accompanied by a list thereof.

CONTRACTOR:
(Name and address)

BY

(Signature of authorized representative)

(Printed name and title)

Subscribed and sworn to before me on this date:

Notary Public:

© 1994 THE AMERICAN INSTITUTE OF ARCHITECTS, 1735 NEW YORK AVENUE, N.W., WASHINGTON, D.C. 20006-5292. AIA DOCUMENT G706A - CONTRACTOR'S AFFIDAVIT OF RELEASE OF LIENS - 1994 EDITION - AIA® - WARNING: Unlicensed photocopying violates U.S. copyright laws and will subject the violator to legal prosecution. This document was electronically produced with permission of the AIA and can be reproduced in accordance with your license without violation until the date of expiration as noted below.
This document is not an original AIA® Contract Document, but a reproduction produced by AIA® Contract Documents software for illustrative purposes only and is not for other use or resale.

My Commission Expires: _____

AIA DOCUMENT G706 - CONTRACTOR'S AFFIDAVIT OF PAYMENT OF DEBTS AND CLAIMS- 1994 EDITION - AIA - COPYRIGHT 1994 - THE AMERICAN INSTITUTE OF ARCHITECTS, 1735 NEW YORK AVENUE N.W., WASHINGTON D.C 20006-5292.. WARNING; Unlicensed photocopying violates U.S. copyright laws and is subject to legal prosecution. This document was electronically produced with permission of the AIA and can be reproduced without alteration until the date of expiration as noted below.
This document is not an original AIA® Contract Document, but a reproduction produced by AIA® Contract Documents software for administrative purposes only and is not for other use or resale.

CONSENT OF SURETY TO FINAL PAYMENT

AIA DOCUMENT G707 - ELECTRONIC FORMAT

OWNER ☐
ARCHITECT ☐
CONTRACTOR ☐
SURETY ☐
OTHER ☐

THIS DOCUMENT HAS IMPORTANT LEGAL CONSEQUENCES; CONSULTATION WITH AN ATTORNEY IS ENCOURAGED WITH RESPECT TO ITS COMPLETION OR MODIFICATION. AUTHENTICATION OF THIS ELECTRONICALLY DRAFTED AIA DOCUMENT MAY BE MADE BY USING AIA DOCUMENT D401.

TO OWNER:
(Name and address)

ARCHTECT'S PROJECT NO.:

PROJECT:
(Name and address)

CONTRACT FOR:

CONTRACT DATED:

In accordance with the provisions of the Contract between the Owner and the Contractor as indicated above, the
(Insert name and address of Surety)

, SURETY,

on bond of
(Insert name and address of Contractor)

, CONTRACTOR,

hereby approves of the final payment to the Contractor, and agrees that final payment to the Contractor shall not relieve the Surety of its obligations to
(Insert name and address of Owner)

, OWNER,

as set forth in said Surety's bond.

IN WITNESS WHEREOF, the Surety has hereunto set its hand on this date:
(Insert in writing the month followed by the numeric date and year.)

(Surety)

Attest:

(Signature of authorized representative)

(Seal):

(Printed name and title)

© 1994 THE AMERICAN INSTITUTE OF ARCHITECTS, 1735 NEW YORK AVENUE, N.W., WASHINGTON, D.C. 20006-5292. AIA DOCUMENT G707 - CONSENT OF SURETY TO FINAL PAYMENT - 1994 EDITION - AIA® - WARNING: Unlicensed photocopying violates U.S. copyright laws and will subject the violator to legal prosecution. This document was electronically produced with permission of the AIA and can be reproduced in accordance with your license without violation until the date of expiration as noted below.
This document is not an original AIA® Contract Document, but a reproduction produced by AIA® Contract Documents software for administrative purposes only and is not for other use or resale.

SECTION 013100 - PROJECT MANAGEMENT AND COORDINATION

PART 1 - GENERAL

1.1 RELATED DOCUMENTS

A. Drawings and general provisions of the Contract, including General and Supplementary Conditions and other Division 01 Specification Sections, apply to this Section.

1.2 SUMMARY

A. Section includes administrative provisions for coordinating construction operations on Project including, but not limited to, the following:

1. General project coordination procedures.
2. Administrative and supervisory personnel.
3. Requests for Information (RFIs).
4. Project meetings.

B. Each contractor shall participate in coordination requirements. Certain areas of responsibility are assigned to a specific contractor.

C. Related Sections:
1. Division 01 Section "Construction Progress Documentation" for preparing and submitting Contractor's construction schedule.
2. Division 01 Section "Execution Requirements" for procedures for coordinating general installation and field-engineering services, including establishment of benchmarks and control points.
3. Division 01 Section "Closeout Procedures" for coordinating closeout of the Contract.
4. Division 01 Section "General Commissioning Requirements" for coordinating the Work with Commissioning Authority.

1.3 DEFINITIONS

A. RFI: Request from Owner, Engineer, or Contractor seeking information from each other during construction.

1.4 COORDINATION

A. Coordination: Coordinate construction operations included in different Sections of the Specifications to ensure efficient and orderly installation of each part of the Work. Coordinate construction operations, included in different Sections, that depend on each other for proper installation, connection, and operation.

1. Schedule construction operations in sequence required to obtain the best results where installation of one part of the Work depends on installation of other components, before or after its own installation.
2. Coordinate installation of different components to ensure maximum performance and accessibility for required maintenance, service, and repair.
3. Make adequate provisions to accommodate items scheduled for later installation.

B. Coordination: Each contractor shall coordinate its construction operations with those of other contractors and entities to ensure efficient and orderly installation of each part of the Work. Each contractor shall coordinate its operations with operations, included in different Sections, that depend on each other for proper installation, connection, and operation.

1. Schedule construction operations in sequence required to obtain the best results where installation of one part of the Work depends on installation of other components, before or after its own installation.
2. Coordinate installation of different components with other contractors to ensure maximum performance and accessibility for required maintenance, service, and repair.
3. Make adequate provisions to accommodate items scheduled for later installation.

C. Prepare memoranda for distribution to each party involved, outlining special procedures required for coordination. Include such items as required notices, reports, and list of attendees at meetings.

1. Prepare similar memoranda for Owner and separate contractors if coordination of their Work is required.

D. Administrative Procedures: Coordinate scheduling and timing of required administrative procedures with other construction activitiesand activities of other contractors to avoid conflicts and to ensure orderly progress of the Work. Such administrative activities include, but are not limited to, the following:

1. Preparation of Contractor's construction schedule.
2. Preparation of the schedule of values.
3. Installation and removal of temporary facilities and controls.
4. Delivery and processing of submittals.
5. Progress meetings.
6. Preinstallation conferences.
7. Project closeout activities.
8. Startup and adjustment of systems.
9. Project closeout activities.

E. Conservation: Coordinate construction activities to ensure that operations are carried out with consideration given to conservation of energy, water, and materials. Coordinate use of temporary utilities to minimize waste.

1. Salvage materials and equipment involved in performance of, but not actually incorporated into, the Work. Refer to other Sections for disposition of salvaged materials that are designated as Owner's property.

1.5 KEY PERSONNEL

A. Key Personnel Names: Within 15 days of starting construction operations, submit a list of key personnel assignments, including superintendent and other personnel in attendance at Project site. Identify individuals and their duties and responsibilities; list addresses and telephone numbers, including home, office, and cellular telephone numbers and email addresses. Provide names, addresses, and telephone numbers of individuals assigned as standbys in the absence of individuals assigned to Project.

1. Post copies of list in project meeting room, in temporary field office, and by each temporary telephone. Keep list current at all times.

1.6 REQUESTS FOR INFORMATION (RFIs)

A. General: Immediately on discovery of the need for additional information or interpretation of the Contract Documents, Contractor shall prepare and submit an RFI in the form specified.

1. Engineer will return RFIs submitted to Engineer by other entities controlled by Contractor with no response.
2. Coordinate and submit RFIs in a prompt manner so as to avoid delays in Contractor's work or work of subcontractors.

B. Content of the RFI: Include a detailed, legible description of item needing information or interpretation and the following:

1. Project name.
2. Project number.
3. Date.
4. Name of Contractor.
5. Name of Engineer.
6. RFI number, numbered sequentially.
7. RFI subject.
8. Specification Section number and title and related paragraphs, as appropriate.
9. Drawing number and detail references, as appropriate.
10. Field dimensions and conditions, as appropriate.
11. Contractor's suggested resolution. If Contractor's solution(s) impacts the Contract Time or the Contract Sum, Contractor shall state impact in the RFI.
12. Contractor's signature.
13. Attachments: Include sketches, descriptions, measurements, photos, Product Data, Shop Drawings, coordination drawings, and other information necessary to fully describe items needing interpretation.

    a. Include dimensions, thicknesses, structural grid references, and details of affected materials, assemblies, and attachments on attached sketches.

C. RFI Forms: Software-generated form with substantially the same content as indicated above, acceptable to Engineer.

D. Engineer's Action: Engineer will review each RFI, determine action required, and respond. Allow seven working days for Engineer's response for each RFI. RFIs received by Engineer after 1:00 p.m. will be considered as received the following working day.

1. The following RFIs will be returned without action:

   a. Requests for approval of submittals.
   b. Requests for approval of substitutions.
   c. Requests for coordination information already indicated in the Contract Documents.
   d. Requests for adjustments in the Contract Time or the Contract Sum.
   e. Requests for interpretation of Engineer's actions on submittals.
   f. Incomplete RFIs or inaccurately prepared RFIs.

2. Engineer's action may include a request for additional information, in which case Engineer's time for response will date from time of receipt of additional information.
3. Engineer's action on RFIs that may result in a change to the Contract Time or the Contract Sum may be eligible for Contractor to submit Change Proposal according to Division 01 Section "Contract Modification Procedures."

   a. If Contractor believes the RFI response warrants change in the Contract Time or the Contract Sum, notify Engineer in writing within 10 days of receipt of the RFI response.

E. On receipt of Engineer's action, update the RFI log and immediately distribute the RFI response to affected parties. Review response and notify Engineer within seven days if Contractor disagrees with response.

F. RFI Log: Prepare, maintain, and submit a tabular log of RFIs organized by the RFI number. Submit log weekly. Use CSI Log Form 13.2B.

1. Project name.
2. Name and address of Contractor.
3. Name and address of Engineer.
4. RFI number including RFIs that were dropped and not submitted.
5. RFI description.
6. Date the RFI was submitted.
7. Date Engineer's response was received.
8. Identification of related Minor Change in the Work, Construction Change Directive, and Proposal Request, as appropriate.
9. Identification of related Field Order, Work Change Directive, and Proposal Request, as appropriate.

1.7 PROJECT MEETINGS

A. General: Engineer will schedule and conduct meetings and conferences at Project site, unless otherwise indicated.

1. Attendees: Inform participants and others involved, and individuals whose presence is required, of date and time of each meeting. Notify Owner and Engineer of scheduled meeting dates and times.
2. Agenda: Prepare the meeting agenda. Distribute the agenda to all invited attendees.
3. Minutes: Entity responsible for conducting meeting will record significant discussions and agreements achieved. Distribute the meeting minutes to everyone concerned, including Owner and Engineer, within three days of the meeting.

B. Preconstruction Conference: Engineer will schedule and conduct a preconstruction conference before starting construction, at a time convenient to Owner and Engineer, but no later than 15 days after execution of the Agreement.

1. Conduct the conference to review responsibilities and personnel assignments.
2. Attendees: Authorized representatives of Owner, Engineer, and their consultants; Contractor and its superintendent; major subcontractors; suppliers; and other concerned parties shall attend the conference. Participants at the conference shall be familiar with Project and authorized to conclude matters relating to the Work.
3. Agenda: Discuss items of significance that could affect progress, including the following:

    a. Tentative construction schedule.
    b. Phasing.
    c. Critical work sequencing and long-lead items.
    d. Designation of key personnel and their duties.
    e. Lines of communications.
    f. Procedures for processing field decisions and Change Orders.
    g. Procedures for RFIs.
    h. Procedures for testing and inspecting.
    i. Procedures for processing Applications for Payment.
    j. Distribution of the Contract Documents.
    k. Submittal procedures.
    l. Preparation of record documents.
    m. Use of the premises and existing building.
    n. Work restrictions.
    o. Working hours.
    p. Owner's occupancy requirements.
    q. Responsibility for temporary facilities and controls.
    r. Procedures for disruptions and shutdowns.
    s. Construction waste management and recycling.
    t. Parking availability.
    u. Office, work, and storage areas.
    v. Equipment deliveries and priorities.
    w. First aid.
    x. Security.
    y. Progress cleaning.

4. Minutes: Entity responsible for conducting meeting will record and distribute meeting minutes.

C. Preinstallation Conferences: Conduct a preinstallation conference at Project site before each construction activity that requires coordination with other construction.

1. Attendees: Installer and representatives of manufacturers and fabricators involved in or affected by the installation and its coordination or integration with other materials and installations that have preceded or will follow, shall attend the meeting. Advise Engineer of scheduled meeting dates.
2. Agenda: Review progress of other construction activities and preparations for the particular activity under consideration, including requirements for the following:

    a. Contract Documents.
    b. Options.
    c. Related RFIs.
    d. Related Change Orders.
    e. Purchases.
    f. Deliveries.
    g. Submittals.
    h. Review of mockups.
    i. Possible conflicts.
    j. Compatibility problems.
    k. Time schedules.
    l. Weather limitations.
    m. Manufacturer's written recommendations.
    n. Warranty requirements.
    o. Compatibility of materials.
    p. Acceptability of substrates.
    q. Temporary facilities and controls.
    r. Space and access limitations.
    s. Regulations of authorities having jurisdiction.
    t. Testing and inspecting requirements.
    u. Installation procedures.
    v. Coordination with other work.
    w. Required performance results.
    x. Protection of adjacent work.
    y. Protection of construction and personnel.

3. Record significant conference discussions, agreements, and disagreements, including required corrective measures and actions.
4. Reporting: Distribute minutes of the meeting to each party present and to other parties requiring information.
5. Do not proceed with installation if the conference cannot be successfully concluded. Initiate whatever actions are necessary to resolve impediments to performance of the Work and reconvene the conference at earliest feasible date.

D. Project Closeout Conference: The Engineer will schedule and conduct a Project closeout conference, at a time convenient to Owner and Engineer, but no later than 14 days prior to the scheduled date of Substantial Completion.

1. Conduct the conference to review requirements and responsibilities related to Project closeout.
2. Attendees: Authorized representatives of Owner, Engineer, and their consultants; Contractor and its superintendent; major subcontractors; suppliers; and other concerned parties shall attend the meeting. Participants at the meeting shall be familiar with Project and authorized to conclude matters relating to the Work.

3. Agenda: Discuss items of significance that could affect or delay Project closeout, including the following:

    a. Preparation of record documents.
    b. Procedures required prior to inspection for Substantial Completion and for final inspection for acceptance.
    c. Submittal of written warranties.
    d. Requirements for preparing sustainable design documentation.
    e. Requirements for preparing operations and maintenance data.
    f. Requirements for demonstration and training.
    g. Preparation of Contractor's punch list.
    h. Procedures for processing Applications for Payment at Substantial Completion and for final payment.
    i. Submittal procedures.
    j. Coordination of separate contracts.
    k. Owner's partial occupancy requirements.
    l. Responsibility for removing temporary facilities and controls.

4. Minutes: Entity conducting meeting will record and distribute meeting minutes.

E. Progress Meetings: Engineer will conduct progress meetings at biweekly intervals.

1. Coordinate dates of meetings with preparation of payment requests.
2. Attendees: In addition to representatives of Owner and Engineer, each contractor, subcontractor, supplier, and other entity concerned with current progress or involved in planning, coordination, or performance of future activities shall be represented at these meetings. All participants at the meeting shall be familiar with Project and authorized to conclude matters relating to the Work.
3. Agenda: Review and correct or approve minutes of previous progress meeting. Review other items of significance that could affect progress. Include topics for discussion as appropriate to status of Project.

    a. Contractor's Construction Schedule: Review progress since the last meeting. Determine whether each activity is on time, ahead of schedule, or behind schedule, in relation to Contractor's construction schedule. Determine how construction behind schedule will be expedited; secure commitments from parties involved to do so. Discuss whether schedule revisions are required to ensure that current and subsequent activities will be completed within the Contract Time.

        1) Review schedule for next period.

    b. Review present and future needs of each entity present, including the following:

        1) Interface requirements.
        2) Sequence of operations.
        3) Status of submittals.
        4) Deliveries.
        5) Off-site fabrication.
        6) Access.
        7) Site utilization.
        8) Temporary facilities and controls.

9) Progress cleaning.
10) Quality and work standards.
11) Status of correction of deficient items.
12) Field observations.
13) Status of RFIs.
14) Status of proposal requests.
15) Pending changes.
16) Status of Change Orders.
17) Pending claims and disputes.
18) Documentation of information for payment requests.

4. Minutes: Entity responsible for conducting the meeting will record and distribute the meeting minutes to each party present and to parties requiring information.

   a. Schedule Updating: Revise Contractor's construction schedule after each progress meeting where revisions to the schedule have been made or recognized. Issue revised schedule concurrently with the report of each meeting.

F. Coordination Meetings: Contractor shall conduct Project coordination meetings at weekly intervals. Project coordination meetings are in addition to specific meetings held for other purposes, such as progress meetings and preinstallation conferences.

1. Attendees: In addition to representatives of Owner and Engineer, each contractor, subcontractor, supplier, and other entity concerned with current progress or involved in planning, coordination, or performance of future activities shall be represented at these meetings. All participants at the meetings shall be familiar with Project and authorized to conclude matters relating to the Work.
2. Agenda: Review and correct or approve minutes of the previous coordination meeting. Review other items of significance that could affect progress. Include topics for discussion as appropriate to status of Project.

   a. Combined Contractor's Construction Schedule: Review progress since the last coordination meeting. Determine whether each contract is on time, ahead of schedule, or behind schedule, in relation to combined Contractor's construction schedule. Determine how construction behind schedule will be expedited; secure commitments from parties involved to do so. Discuss whether schedule revisions are required to ensure that current and subsequent activities will be completed within the Contract Time.
   b. Schedule Updating: Revise combined Contractor's construction schedule after each coordination meeting where revisions to the schedule have been made or recognized. Issue revised schedule concurrently with report of each meeting.
   c. Review present and future needs of each contractor present, including the following:

      1) Interface requirements.
      2) Sequence of operations.
      3) Status of submittals.
      4) Deliveries.
      5) Off-site fabrication.
      6) Access.
      7) Site utilization.

8) Temporary facilities and controls.
9) Work hours.
10) Hazards and risks.
11) Progress cleaning.
12) Quality and work standards.
13) Change Orders.

3. Reporting: Record meeting results and distribute copies to everyone in attendance and to others affected by decisions or actions resulting from each meeting.

PART 2 - PRODUCTS (Not Used)

PART 3 - EXECUTION (Not Used)

END OF SECTION 013100

SECTION 013200 - CONSTRUCTION PROGRESS DOCUMENTATION

PART 1 - GENERAL

1.1 RELATED DOCUMENTS

A. Drawings and general provisions of the Contract, including General and Supplementary Conditions and other Division 01 Specification Sections, apply to this Section.

1.2 SUMMARY

A. Section includes administrative and procedural requirements for documenting the progress of construction during performance of the Work, including the following:

1. Contractor's construction schedule.
2. Daily construction reports.
3. Material location reports.
4. Field condition reports.
5. Special reports.

B. Related Sections:

1. Division 01 Section "Submittal Procedures" for submitting schedules and reports.
2. Division 01 Section "Quality Requirements" for submitting a schedule of tests and inspections.

1.3 DEFINITIONS

A. Activity: A discrete part of a project that can be identified for planning, scheduling, monitoring, and controlling the construction project. Activities included in a construction schedule consume time and resources.

1. Critical Activity: An activity on the critical path that must start and finish on the planned early start and finish times.
2. Predecessor Activity: An activity that precedes another activity in the network.
3. Successor Activity: An activity that follows another activity in the network.

B. Cost Loading: The allocation of the schedule of values for the completion of an activity as scheduled. The sum of costs for all activities must equal the total Contract Sum, unless otherwise approved by Engineer.

C. CPM: Critical path method, which is a method of planning and scheduling a construction project where activities are arranged based on activity relationships. Network calculations determine when activities can be performed and the critical path of the Project.

D. Critical Path: The longest connected chain of interdependent activities through the network schedule that establishes the minimum overall Project duration and contains no float.

E. Event: The starting or ending point of an activity.

F. Float: The measure of leeway in starting and completing an activity.

1. Float time is not for the exclusive use or benefit of either Owner or Contractor, but is a jointly owned, expiring Project resource available to both parties as needed to meet schedule milestones and Contract completion date.
2. Free float is the amount of time an activity can be delayed without adversely affecting the early start of the successor activity.
3. Total float is the measure of leeway in starting or completing an activity without adversely affecting the planned Project completion date.

G. Resource Loading: The allocation of manpower and equipment necessary for the completion of an activity as scheduled.

1.4 INFORMATIONAL SUBMITTALS

A. Format for Submittals: Submit required submittals in the following format:

1. PDF electronic file.

B. Start-up construction schedule.

1. Approval of cost-loaded start-up construction schedule will not constitute approval of schedule of values for cost-loaded activities.

C. Start-up Network Diagram: Of size required to display entire network for entire construction period. Show logic ties for activities.

D. Contractor's Construction Schedule: Initial schedule, of size required to display entire schedule for entire construction period.

1. Submit a working electronic copy of schedule, using software indicated, and labeled to comply with requirements for submittals. Include type of schedule (initial or updated) and date on label.

E. Daily Construction Reports: Submit at monthly intervals.

F. Field Condition Reports: Submit at time of discovery of differing conditions.

G. Special Reports: Submit at time of unusual event.

1.5 QUALITY ASSURANCE

A. Scheduling Consultant Qualifications: An experienced specialist in CPM scheduling and reporting, with capability of producing CPM reports and diagrams within 24 hours of Engineer's request.

B. Prescheduling Conference: Conduct conference at Project site to comply with requirements in Division 01 Section "Project Management and Coordination." Review methods and procedures

related to the preliminary construction schedule and Contractor's construction schedule, including, but not limited to, the following:

1. Review software limitations and content and format for reports.
2. Verify availability of qualified personnel needed to develop and update schedule.
3. Discuss constraints, including phasing work stages area separations interim milestones and partial Owner occupancy.
4. Review delivery dates for Owner-furnished products.
5. Review schedule for work of Owner's separate contracts.
6. Review time required for review of submittals and resubmittals.
7. Review requirements for tests and inspections by independent testing and inspecting agencies.
8. Review time required for completion and startup procedures.
9. Review and finalize list of construction activities to be included in schedule.
10. Review submittal requirements and procedures.
11. Review procedures for updating schedule.

1.6 COORDINATION

A. Coordinate preparation and processing of schedules and reports with performance of construction activities and with scheduling and reporting of separate contractors.

B. Coordinate Contractor's construction schedule with the schedule of values, submittal schedule, progress reports, payment requests, and other required schedules and reports.

1. Secure time commitments for performing critical elements of the Work from entities involved.
2. Coordinate each construction activity in the network with other activities and schedule them in proper sequence.

PART 2 - PRODUCTS

2.1 CONTRACTOR'S CONSTRUCTION SCHEDULE, GENERAL

A. Time Frame: Extend schedule from date established for the Notice to Proceed to date of Substantial Completion.

1. Contract completion date shall not be changed by submission of a schedule that shows an early completion date, unless specifically authorized by Change Order.

B. Activities: Treat each story or separate area as a separate numbered activity for each principal element of the Work. Comply with the following:

1. Activity Duration: Define activities so no activity is longer than 10 days, unless specifically allowed by Engineer.
2. Procurement Activities: Include procurement process activities for the following long lead items and major items, requiring a cycle of more than 60 days, as separate activities

in schedule. Procurement cycle activities include, but are not limited to, submittals, approvals, purchasing, fabrication, and delivery.

a. Rooftop Units

3. Submittal Review Time: Include review and resubmittal times indicated in Division 01 Section "Submittal Procedures" in schedule. Coordinate submittal review times in Contractor's construction schedule with submittal schedule.
4. Startup and Testing Time: Include not less than 15 days for startup and testing.
5. Substantial Completion: Indicate completion in advance of date established for Substantial Completion, and allow time for Engineer's administrative procedures necessary for certification of Substantial Completion.
6. Punch List and Final Completion: Include not more than 30 days for punch list and final completion.

C. Constraints: Include constraints and work restrictions indicated in the Contract Documents and as follows in schedule, and show how the sequence of the Work is affected.

1. Phasing: Arrange list of activities on schedule by phase.
2. Work under More Than One Contract: Include a separate activity for each contract.
3. Work by Owner: Include a separate activity for each portion of the Work performed by Owner.
4. Products Ordered in Advance: Include a separate activity for each product. Include delivery date indicated in Division 01 Section "Summary." Delivery dates indicated stipulate the earliest possible delivery date.
5. Owner-Furnished Products: Include a separate activity for each product. Include delivery date indicated in Division 01 Section "Summary." Delivery dates indicated stipulate the earliest possible delivery date.
6. Work Restrictions: Show the effect of the following items on the schedule:

   a. Coordination with existing construction.
   b. Limitations of continued occupancies.
   c. Uninterruptible services.
   d. Partial occupancy before Substantial Completion.
   e. Use of premises restrictions.
   f. Provisions for future construction.
   g. Seasonal variations.
   h. Environmental control.

7. Work Stages: Indicate important stages of construction for each major portion of the Work, including, but not limited to, the following:

   a. Subcontract awards.
   b. Submittals.
   c. Purchases.
   d. Mockups.
   e. Fabrication.
   f. Sample testing.
   g. Deliveries.
   h. Installation.
   i. Tests and inspections.
   j. Adjusting.
   k. Startup and placement into final use and operation.

8. Construction Areas: Identify each major area of construction for each major portion of the Work. Indicate where each construction activity within a major area must be sequenced or integrated with other construction activities to provide for the following:

    a. Structural completion.
    b. Permanent space enclosure.
    c. Completion of mechanical installation.
    d. Completion of electrical installation.
    e. Substantial Completion.

D. Milestones: Include milestones indicated in the Contract Documents in schedule, including, but not limited to, the Notice to Proceed, Substantial Completion, and final completion.

E. Cost Correlation: At the head of schedule, provide a cost correlation line, indicating planned and actual costs. On the line, show dollar volume of the Work performed as of dates used for preparation of payment requests.

    1. Refer to Division 01 Section "Payment Procedures" for cost reporting and payment procedures.

F. Upcoming Work Summary: Prepare summary report indicating activities scheduled to occur or commence prior to submittal of next schedule update. Summarize the following issues:

    1. Unresolved issues.
    2. Unanswered RFIs.
    3. Rejected or unreturned submittals.
    4. Notations on returned submittals.

G. Recovery Schedule: When periodic update indicates the Work is 14 or more calendar days behind the current approved schedule, submit a separate recovery schedule indicating means by which Contractor intends to regain compliance with the schedule. Indicate changes to working hours, working days, crew sizes, and equipment required to achieve compliance, and date by which recovery will be accomplished.

H. Computer Scheduling Software: Prepare schedules using current version of a program that has been developed specifically to manage construction schedules.

2.2 START-UP CONSTRUCTION SCHEDULE

A. Bar-Chart Schedule: Submit start-up horizontal bar-chart-type construction schedule within seven days of date established for the Notice to Proceed.

B. Preparation: Indicate each significant construction activity separately. Identify first workday of each week with a continuous vertical line. Outline significant construction activities for first 30 days of construction. Include skeleton diagram for the remainder of the Work and a cash requirement prediction based on indicated activities.

2.3 CONTRACTOR'S CONSTRUCTION SCHEDULE (GANTT CHART)

A. Gantt-Chart Schedule: Submit a comprehensive, fully developed, horizontal Gantt-chart-type, Contractor's construction schedule within 15 days of date established for the Notice to Proceed. Base schedule on the start-up construction schedule and additional information received since the start of Project.

B. Preparation: Indicate each significant construction activity separately. Identify first workday of each week with a continuous vertical line.

1. For construction activities that require three months or longer to complete, indicate an estimated completion percentage in 10 percent increments within time bar.

2.4 REPORTS

A. Daily Construction Reports: Prepare a daily construction report recording the following information concerning events at Project site:

1. List of subcontractors at Project site.
2. List of separate contractors at Project site.
3. Approximate count of personnel at Project site.
4. Equipment at Project site.
5. Material deliveries.
6. High and low temperatures and general weather conditions, including presence of rain or snow.
7. Accidents.
8. Meetings and significant decisions.
9. Unusual events (refer to special reports).
10. Stoppages, delays, shortages, and losses.
11. Emergency procedures.
12. Orders and requests of authorities having jurisdiction.
13. Change Orders received and implemented.
14. Construction Change Directives received and implemented.
15. Services connected and disconnected.
16. Equipment or system tests and startups.
17. Partial completions and occupancies.
18. Substantial Completions authorized.

B. Material Location Reports: At monthly intervals, prepare and submit a comprehensive list of materials delivered to and stored at Project site. List shall be cumulative, showing materials previously reported plus items recently delivered. Include with list a statement of progress on and delivery dates for materials or items of equipment fabricated or stored away from Project site.

C. Field Condition Reports: Immediately on discovery of a difference between field conditions and the Contract Documents, prepare and submit a detailed report. Submit with a Request for Information. Include a detailed description of the differing conditions, together with recommendations for changing the Contract Documents.

PART 3 - EXECUTION

3.1 CONTRACTOR'S CONSTRUCTION SCHEDULE

A. Contractor's Construction Schedule Updating: At monthly intervals, update schedule to reflect actual construction progress and activities. Issue schedule one week before each regularly scheduled progress meeting.

1. Revise schedule immediately after each meeting or other activity where revisions have been recognized or made. Issue updated schedule concurrently with the report of each such meeting.
2. Include a report with updated schedule that indicates every change, including, but not limited to, changes in logic, durations, actual starts and finishes, and activity durations.
3. As the Work progresses, indicate final completion percentage for each activity.

B. Distribution: Distribute copies of approved schedule to Engineer, Owner, separate contractors, testing and inspecting agencies, and other parties identified by Contractor with a need-to-know schedule responsibility.

1. Post copies in Project meeting rooms and temporary field offices.
2. When revisions are made, distribute updated schedules to the same parties and post in the same locations. Delete parties from distribution when they have completed their assigned portion of the Work and are no longer involved in performance of construction activities.

END OF SECTION 013200

AIA® Document G716™ – 2004

Request for Information ("RFI")

TO: FROM:

PROJECT: ISSUE DATE: RFI No.

PROJECT NUMBERS: / REQUESTED REPLY DATE:
COPIES TO:

RFI DESCRIPTION: *(Fully describe the question or type of information requested.)*

REFERENCES/ATTACHMENTS: *(List specific documents researched when seeking the information requested.)*
SPECIFICATIONS: DRAWINGS: OTHER:

SENDER'S RECOMMENDATION: *(If RFI concerns a site or construction condition, the sender may provide a recommended solution, including cost and/or schedule considerations.)*

RECEIVER'S REPLY: *(Provide answer to RFI, including cost and/or schedule considerations.)*

BY DATE COPIES TO

Note: This reply is not an authorization to proceed with work involving additional cost, time or both. If any reply requires a change to the Contract Documents, a Change Order, Construction Change Directive or a Minor Change in the work must be executed in accordance with the Contract Documents.

AIA Document G716™ – 2004. Copyright © 2004 by The American Institute of Architects. All rights reserved. WARNING: This AIA® Document is protected by U.S. Copyright Law and International Treaties. Unauthorized reproduction or distribution of this AIA® Document, or any portion of it, may result in severe civil and criminal penalties, and will be prosecuted to the maximum extent possible under the law. This document was produced by AIA software at 15:26:41 on 03/24/2005 under Order No.1000167209_1 which expires on 3/7/2006, and is not for resale.
User Notes:

(2706026339)

Advancement of Construction Technology

REQUEST FOR INTERPRETATION

Project: _____ R.F.I. Number: _____

_____ From: _____

To: _____ Date: _____

_____ A/E Project Number: _____

Re: _____ Contract For: _____

Specification Section: Paragraph: Drawing Reference: Detail:

Request:

Signed by: Date:

Response:

☐ Attachments

Response From: To: Date Rec'd: Date Ret'd:

Signed by: Date:

Copies: ☐ Owner ☐ Consultants ☐ _____ ☐ _____ ☐ _____ ☐ _____ ☐ File

Copyright 1994, Construction Specifications Institute,
99 Canal Center Plaza, Suite 300 Alexandria, VA 22314

July 1994
CSI Form 13.2A

SECTION 013300 - SUBMITTAL PROCEDURES

PART 1 - GENERAL

1.1 RELATED DOCUMENTS

A. Drawings and general provisions of the Contract, including General and Supplementary Conditions and other Division 01 Specification Sections, apply to this Section.

1.2 SUMMARY

A. Section includes requirements for the submittal schedule and administrative and procedural requirements for submitting Shop Drawings, Product Data, Samples, and other submittals.

B. Related Sections:

1. Division 01 Section "Payment Procedures" for submitting Applications for Payment and the schedule of values.
2. Division 01 Section "Construction Progress Documentation" for submitting schedules and reports, including Contractor's construction schedule.
3. Division 01 Section "Project Record Documents" for submitting record Drawings, record Specifications, and record Product Data.
4. Division 01 Section "Operation and Maintenance Data" for submitting operation and maintenance manuals.
5. Division 01 Section "Demonstration and Training" for submitting video recordings of demonstration of equipment and training of Owner's personnel.

1.3 DEFINITIONS

A. Action Submittals: Written and graphic information and physical samples that require Engineer's responsive action. Action submittals are those submittals indicated in individual Specification Sections as action submittals.

B. Informational Submittals: Written and graphic information and physical samples that do not require Engineer's responsive action. Submittals may be rejected for not complying with requirements. Informational submittals are those submittals indicated in individual Specification Sections as informational submittals.

C. File Transfer Protocol (FTP): Communications protocol that enables transfer of files to and from another computer over a network and that serves as the basis for standard Internet protocols. An FTP site is a portion of a network located outside of network firewalls within which internal and external users are able to access files.

D. Portable Document Format (PDF): An open standard file format licensed by Adobe Systems used for representing documents in a device-independent and display resolution-independent fixed-layout document format.

1.4 ACTION SUBMITTALS

A. Submittal Schedule: Submit a schedule of submittals, arranged in chronological order by dates required by construction schedule. Include time required for review, ordering, manufacturing, fabrication, and delivery when establishing dates. Include additional time required for making corrections or modifications to submittals noted by the Engineer and additional time for handling and reviewing submittals required by those corrections.

1. Coordinate submittal schedule with list of subcontracts, the schedule of values, and Contractor's construction schedule.
2. Initial Submittal: Submit concurrently with start-up construction schedule. Include submittals required during the first 60 days of construction. List those submittals required to maintain orderly progress of the Work and those required early because of long lead time for manufacture or fabrication.
3. Final Submittal: Submit concurrently with the first complete submittal of Contractor's construction schedule.

    a. Submit revised submittal schedule to reflect changes in current status and timing for submittals.

4. Format: Arrange the following information in a tabular format:

    a. Scheduled date for first submittal.
    b. Specification Section number and title.
    c. Submittal category: Action, informational.
    d. Name of subcontractor.
    e. Description of the Work covered.
    f. Scheduled date for Engineer's final release or approval.
    g. Scheduled dates for purchasing.
    h. Scheduled dates for installation.
    i. Activity or event number.

1.5 SUBMITTAL ADMINISTRATIVE REQUIREMENTS

A. Engineer's Digital Data Files: Electronic copies of CAD Drawings of the Contract Drawings will be provided by Engineer for Contractor's use in preparing submittals.

1. Engineer will furnish Contractor one set of digital data drawing files of the Contract Drawings for use in preparing Shop Drawings and Project record drawings.

    a. Engineer makes no representations as to the accuracy or completeness of digital data drawing files as they relate to the Contract Drawings.
    b. Digital Drawing Software Program: The Contract Drawings are available in AutoCADD 2014.
    c. Contractor shall execute a data licensing agreement in the form of Agreement included in Project Manual.
    d. The following plot files will by furnished for each appropriate discipline:

        1) Floor plans.
        2) Mechanical plans.

3) Electrical plans.

B. Coordination: Coordinate preparation and processing of submittals with performance of construction activities.

1. Coordinate each submittal with fabrication, purchasing, testing, delivery, other submittals, and related activities that require sequential activity.
2. Submit all submittal items required for each Specification Section concurrently unless partial submittals for portions of the Work are indicated on approved submittal schedule.
3. Submit action submittals and informational submittals required by the same Specification Section as separate packages under separate transmittals.
4. Coordinate transmittal of different types of submittals for related parts of the Work so processing will not be delayed because of need to review submittals concurrently for coordination.

   a. Engineer reserves the right to withhold action on a submittal requiring coordination with other submittals until related submittals are received.

C. Processing Time: Allow time for submittal review, including time for resubmittals, as follows. Time for review shall commence on Engineer's receipt of submittal. No extension of the Contract Time will be authorized because of failure to transmit submittals enough in advance of the Work to permit processing, including resubmittals.

1. Initial Review: Allow 7 days for initial review of each submittal. Allow additional time if coordination with subsequent submittals is required. Engineer will advise Contractor when a submittal being processed must be delayed for coordination.
2. Intermediate Review: If intermediate submittal is necessary, process it in same manner as initial submittal.
3. Resubmittal Review: Allow 7 days for review of each resubmittal.
4. Sequential Review: Where sequential review of submittals by Engineer's consultants, Owner, or other parties is indicated, allow 4 days for initial review of each submittal.
5. Concurrent Consultant Review: Where the Contract Documents indicate that submittals may be transmitted simultaneously to Engineer and to Engineer's consultants, allow 15 days for review of each submittal. Submittal will be returned to Engineer before being returned to Contractor.

D. Identification and Information: Place a permanent label or title block on each paper copy submittal item for identification.

1. Indicate name of firm or entity that prepared each submittal on label or title block.
2. Provide a space approximately 6 by 8 inches (150 by 200 mm) on label or beside title block to record Contractor's review and approval markings and action taken by Engineer.
3. Include the following information for processing and recording action taken:

   a. Project name.
   b. Date.
   c. Name of Engineer.
   d. Name of Contractor.
   e. Name of subcontractor.
   f. Name of supplier.
   g. Name of manufacturer.

h. Submittal number or other unique identifier, including revision identifier.

1) Submittal number shall use Specification Section number followed by a decimal point and then a sequential number (e.g., 06100.01). Resubmittals shall include an alphabetic suffix after another decimal point (e.g., 06100.01.A).

i. Number and title of appropriate Specification Section.
j. Drawing number and detail references, as appropriate.
k. Location(s) where product is to be installed, as appropriate.
l. Other necessary identification.

E. Identification and Information: Identify and incorporate information in each electronic submittal file as follows:

1. Assemble complete submittal package into a single indexed file with links enabling navigation to each item.
2. Name file with submittal number or other unique identifier, including revision identifier.

a. File name shall use project identifier and Specification Section number followed by a decimal point and then a sequential number (e.g., LNHS-06100.01). Resubmittals shall include an alphabetic suffix after another decimal point (e.g., LNHS-06100.01.A).

3. Provide means for insertion to permanently record Contractor's review and approval markings and action taken by Engineer.
4. Include the following information on an inserted cover sheet:

a. Project name.
b. Date.
c. Name and address of Engineer.
d. Name of Contractor.
e. Name of firm or entity that prepared submittal.
f. Name of subcontractor.
g. Name of supplier.
h. Name of manufacturer.
i. Number and title of appropriate Specification Section.
j. Drawing number and detail references, as appropriate.
k. Location(s) where product is to be installed, as appropriate.
l. Related physical samples submitted directly.
m. Other necessary identification.

5. Include the following information as keywords in the electronic file metadata:

a. Project name.
b. Number and title of appropriate Specification Section.
c. Manufacturer name.
d. Product name.

F. Options: Identify options requiring selection by the Engineer.

G. Deviations: Identify deviations from the Contract Documents on submittals.

H. Additional Paper Copies: Unless additional copies are required for final submittal, and unless Engineer observes noncompliance with provisions in the Contract Documents, initial submittal may serve as final submittal.

1. Submit one copy of submittal to concurrent reviewer in addition to specified number of copies to Engineer.

I. Transmittal: Assemble each submittal individually and appropriately for transmittal and handling. Transmit each submittal using a transmittal form. Engineer will return submittals, without review, received from sources other than Contractor.

1. Transmittal Form: Use CSI Form 12.1A.
2. Transmittal Form: Provide locations on form for the following information:

a. Project name.
b. Date.
c. Destination (To:).
d. Source (From:).
e. Names of subcontractor, manufacturer, and supplier.
f. Category and type of submittal.
g. Submittal purpose and description.
h. Specification Section number and title.
i. Indication of full or partial submittal.
j. Drawing number and detail references, as appropriate.
k. Transmittal number, numbered consecutively.
l. Submittal and transmittal distribution record.
m. Remarks.
n. Signature of transmitter.

3. On an attached separate sheet, prepared on Contractor's letterhead, record relevant information, requests for data, revisions other than those requested by Engineer on previous submittals, and deviations from requirements in the Contract Documents, including minor variations and limitations. Include same identification information as related submittal.

J. Resubmittals: Make resubmittals in same form and number of copies as initial submittal.

1. Note date and content of previous submittal.
2. Note date and content of revision in label or title block and clearly indicate extent of revision.
3. Resubmit submittals until they are marked with approval notation from Engineer's action stamp.

K. Distribution: Furnish copies of final submittals to manufacturers, subcontractors, suppliers, fabricators, installers, authorities having jurisdiction, and others as necessary for performance of construction activities. Show distribution on transmittal forms.

L. Use for Construction: Use only final submittals that are marked with approval notation from Engineer's action stamp.

PART 2 - PRODUCTS

2.1 SUBMITTAL PROCEDURES

A. General Submittal Procedure Requirements: Prepare and submit submittals required by individual Specification Sections. Types of submittals are indicated in individual Specification Sections.

1. Post electronic submittals as PDF electronic files directly to Engineer's FTP site specifically established for Project.

   a. Engineer will return annotated file. Annotate and retain one copy of file as an electronic Project record document file.

2. Submit electronic submittals via email as PDF electronic files.

   a. Engineer will return annotated file. Annotate and retain one copy of file as an electronic Project record document file.

3. Action Submittals: Submit six or more paper copies of each submittal, unless otherwise indicated. Engineer will return five (5) copies.
4. Informational Submittals: Submit five (5) paper copies of each submittal, unless otherwise indicated. Engineer will not return copies.
5. Closeout Submittals and Maintenance Material Submittals: Comply with requirements specified in Division 01 Section "Closeout Procedures."
6. Certificates and Certifications Submittals: Provide a statement that includes signature of entity responsible for preparing certification. Certificates and certifications shall be signed by an officer or other individual authorized to sign documents on behalf of that entity.

   a. Provide a digital signature with digital certificate on electronically-submitted certificates and certifications where indicated.
   b. Provide a notarized statement on original paper copy certificates and certifications where indicated.

7. Test and Inspection Reports Submittals: Comply with requirements specified in Division 01 Section "Quality Requirements."

B. Product Data: Collect information into a single submittal for each element of construction and type of product or equipment.

1. If information must be specially prepared for submittal because standard published data are not suitable for use, submit as Shop Drawings, not as Product Data.
2. Mark each copy of each submittal to show which products and options are applicable.
3. Include the following information, as applicable:

   a. Manufacturer's catalog cuts.
   b. Manufacturer's product specifications.
   c. Standard color charts.
   d. Statement of compliance with specified referenced standards.

e. Testing by recognized testing agency.
f. Application of testing agency labels and seals.
g. Notation of coordination requirements.
h. Availability and delivery time information.

4. For equipment, include the following in addition to the above, as applicable:

a. Wiring diagrams showing factory-installed wiring.
b. Printed performance curves.
c. Operational range diagrams.
d. Clearances required to other construction, if not indicated on accompanying Shop Drawings.

5. Submit Product Data before or concurrent with Samples.
6. Submit Product Data in the following format:

a. PDF electronic file.
b. Six or more paper copies of Product Data, unless otherwise indicated. Engineer will return five (5) copies.

C. Shop Drawings: Prepare Project-specific information, drawn accurately to scale. Do not base Shop Drawings on reproductions of the Contract Documents or standard printed data, unless submittal based upon Engineer's digital data drawing files is otherwise permitted.

1. Preparation: Fully illustrate requirements in the Contract Documents. Include the following information, as applicable:

a. Identification of products.
b. Schedules.
c. Compliance with specified standards.
d. Notation of coordination requirements.
e. Notation of dimensions established by field measurement.
f. Relationship and attachment to adjoining construction clearly indicated.
g. Seal and signature of professional engineer if specified.

2. Sheet Size: Except for templates, patterns, and similar full-size drawings, submit Shop Drawings on sheets at least 8-1/2 by 11 inches (215 by 280 mm) but no larger than 30 by 42 inches (750 by 1067 mm).
3. Submit Shop Drawings in the following format:

a. PDF electronic file.
b. Two opaque (bond) copies of each submittal. Engineer will return one copy.

D. Samples: Submit Samples for review of kind, color, pattern, and texture for a check of these characteristics with other elements and for a comparison of these characteristics between submittal and actual component as delivered and installed.

1. Transmit Samples that contain multiple, related components such as accessories together in one submittal package.
2. Identification: Attach label on unexposed side of Samples that includes the following:

a. Generic description of Sample.
b. Product name and name of manufacturer.
c. Sample source.
d. Number and title of applicable Specification Section.

3. Disposition: Maintain sets of approved Samples at Project site, available for quality-control comparisons throughout the course of construction activity. Sample sets may be used to determine final acceptance of construction associated with each set.

   a. Samples that may be incorporated into the Work are indicated in individual Specification Sections. Such Samples must be in an undamaged condition at time of use.
   b. Samples not incorporated into the Work, or otherwise designated as Owner's property, are the property of Contractor.

4. Samples for Initial Selection: Submit manufacturer's color charts consisting of units or sections of units showing the full range of colors, textures, and patterns available.

   a. Number of Samples: Submit one full set(s) of available choices where color, pattern, texture, or similar characteristics are required to be selected from manufacturer's product line. Engineer will return submittal with options selected.

5. Samples for Verification: Submit full-size units or Samples of size indicated, prepared from same material to be used for the Work, cured and finished in manner specified, and physically identical with material or product proposed for use, and that show full range of color and texture variations expected. Samples include, but are not limited to, the following: partial sections of manufactured or fabricated components; small cuts or containers of materials; complete units of repetitively used materials; swatches showing color, texture, and pattern; color range sets; and components used for independent testing and inspection.

   a. Number of Samples: Submit three sets of Samples. Engineer will retain two Sample sets; remainder will be returned.

      1) Submit a single Sample where assembly details, workmanship, fabrication techniques, connections, operation, and other similar characteristics are to be demonstrated.
      2) If variation in color, pattern, texture, or other characteristic is inherent in material or product represented by a Sample, submit at least three sets of paired units that show approximate limits of variations.

E. Product Schedule: As required in individual Specification Sections, prepare a written summary indicating types of products required for the Work and their intended location. Include the following information in tabular form:

1. Type of product. Include unique identifier for each product indicated in the Contract Documents.
2. Manufacturer and product name, and model number if applicable.
3. Number and name of room or space.
4. Location within room or space.
5. Submit product schedule in the following format:

a. PDF electronic file.
b. Three paper copies of product schedule or list, unless otherwise indicated. Engineer will return two copies.

F. Contractor's Construction Schedule: Comply with requirements specified in Division 01 Section "Construction Progress Documentation."

G. Application for Payment: Comply with requirements specified in Division 01 Section "Payment Procedures."

H. Schedule of Values: Comply with requirements specified in Division 01 Section "Payment Procedures."

I. Subcontract List: Prepare a written summary identifying individuals or firms proposed for each portion of the Work, including those who are to furnish products or equipment fabricated to a special design. Use CSI Form 1.5A. Include the following information in tabular form:

1. Name, address, and telephone number of entity performing subcontract or supplying products.
2. Number and title of related Specification Section(s) covered by subcontract.
3. Drawing number and detail references, as appropriate, covered by subcontract.
4. Submit subcontract list in the following format:

a. PDF electronic file.
b. Number of Copies: Three paper copies of subcontractor list, unless otherwise indicated. Engineer will return two copies.

J. Coordination Drawings: Comply with requirements specified in Division 01 Section "Project Management and Coordination."

K. Qualification Data: Prepare written information that demonstrates capabilities and experience of firm or person. Include lists of completed projects with project names and addresses, contact information of Engineers and owners, and other information specified.

L. Welding Certificates: Prepare written certification that welding procedures and personnel comply with requirements in the Contract Documents. Submit record of Welding Procedure Specification and Procedure Qualification Record on American Welding Society (AWS) forms. Include names of firms and personnel certified.

M. Installer Certificates: Submit written statements on manufacturer's letterhead certifying that Installer complies with requirements in the Contract Documents and, where required, is authorized by manufacturer for this specific Project.

N. Manufacturer Certificates: Submit written statements on manufacturer's letterhead certifying that manufacturer complies with requirements in the Contract Documents. Include evidence of manufacturing experience where required.

O. Product Certificates: Submit written statements on manufacturer's letterhead certifying that product complies with requirements in the Contract Documents.

P. Material Certificates: Submit written statements on manufacturer's letterhead certifying that material complies with requirements in the Contract Documents.

Q. Material Test Reports: Submit reports written by a qualified testing agency, on testing agency's standard form, indicating and interpreting test results of material for compliance with requirements in the Contract Documents.

R. Product Test Reports: Submit written reports indicating current product produced by manufacturer complies with requirements in the Contract Documents. Base reports on evaluation of tests performed by manufacturer and witnessed by a qualified testing agency, or on comprehensive tests performed by a qualified testing agency.

S. Research Reports: Submit written evidence, from a model code organization acceptable to authorities having jurisdiction, that product complies with building code in effect for Project. Include the following information:

1. Name of evaluation organization.
2. Date of evaluation.
3. Time period when report is in effect.
4. Product and manufacturers' names.
5. Description of product.
6. Test procedures and results.
7. Limitations of use.

T. Schedule of Tests and Inspections: Comply with requirements specified in Division 01 Section "Quality Requirements."

U. Preconstruction Test Reports: Submit reports written by a qualified testing agency, on testing agency's standard form, indicating and interpreting results of tests performed before installation of product, for compliance with performance requirements in the Contract Documents.

V. Compatibility Test Reports: Submit reports written by a qualified testing agency, on testing agency's standard form, indicating and interpreting results of compatibility tests performed before installation of product. Include written recommendations for primers and substrate preparation needed for adhesion.

W. Field Test Reports: Submit reports indicating and interpreting results of field tests performed either during installation of product or after product is installed in its final location, for compliance with requirements in the Contract Documents.

X. Maintenance Data: Comply with requirements specified in Division 01 Section "Operation and Maintenance Data."

Y. Design Data: Prepare and submit written and graphic information, including, but not limited to, performance and design criteria, list of applicable codes and regulations, and calculations. Include list of assumptions and other performance and design criteria and a summary of loads. Include load diagrams if applicable. Provide name and version of software, if any, used for calculations. Include page numbers.

2.2 DELEGATED-DESIGN SERVICES

A. Performance and Design Criteria: Where professional design services or certifications by a design professional are specifically required of Contractor by the Contract Documents, provide products and systems complying with specific performance and design criteria indicated.

1. If criteria indicated are not sufficient to perform services or certification required, submit a written request for additional information to Engineer.

B. Delegated-Design Services Certification: In addition to Shop Drawings, Product Data, and other required submittals, submit digitally-signed PDF electronic file and three paper copies of certificate, signed and sealed by the responsible design professional, for each product and system specifically assigned to Contractor to be designed or certified by a design professional.

1. Indicate that products and systems comply with performance and design criteria in the Contract Documents. Include list of codes, loads, and other factors used in performing these services.

PART 3 - EXECUTION

3.1 CONTRACTOR'S REVIEW

A. Action and Informational Submittals: Review each submittal and check for coordination with other Work of the Contract and for compliance with the Contract Documents. Note corrections and field dimensions. Mark with approval stamp before submitting to Engineer.

B. Project Closeout and Maintenance/Material Submittals: Refer to requirements in Division 01 Section "Closeout Procedures."

C. Approval Stamp: Stamp each submittal with a uniform, approval stamp. Include Project name and location, submittal number, Specification Section title and number, name of reviewer, date of Contractor's approval, and statement certifying that submittal has been reviewed, checked, and approved for compliance with the Contract Documents.

3.2 ENGINEER'S ACTION

A. General: Engineer will not review submittals that do not bear Contractor's approval stamp and will return them without action.

B. Action Submittals: Engineer will review each submittal, make marks to indicate corrections or modifications required, and return it. Engineer will stamp each submittal with an action stamp and will mark stamp appropriately to indicate action.

C. Informational Submittals: Engineer will review each submittal and will not return it, or will return it if it does not comply with requirements. Engineer will forward each submittal to appropriate party.

D. Partial submittals prepared for a portion of the Work will be reviewed when use of partial submittals has received prior approval from Engineer.

E. Incomplete submittals are not acceptable, will be considered nonresponsive, and will be returned without review.

F. Submittals not required by the Contract Documents may not be reviewed and may be discarded.

END OF SECTION 013300

Advancement of Construction Technology

SUBCONTRACTORS AND MAJOR MATERIAL SUPPLIERS LIST

Project: _____

_____

To (A/E): _____

_____

From (Contractor): _____

Date: _____

A/E Project Number: _____

Contract For: _____

List Subcontractors and Major Material Suppliers proposed for use on this Project as required by the Construction Documents. Attach supplemental sheets if necessary.

Section Number	Section Title	Firm	Address	Phone Number (Fax Number)	Contact

☐ Attachments

Signed by: Date:

Copies: ☐ Owner ☐ Consultants ☐ _____ ☐ _____ ☐ _____ ☐ _____ ☐ _____ ☐ _____ ☐ _____ ☐ File

© Copyright 1994, Construction SpecificationsInstitute,
601 Madison Street, Alexandria, VA 22314-1791

Advancement of Construction Technology

SUBMITTAL TRANSMITTAL

Project: _____ Date: _____

_____ A/E Project Number: _____

TRANSMITTAL A

To (Contractor): _____ Date: _____ Submittal No. _____

From (Subcontractor): _____ By: _____ ☐ Resubmission

Qty.	Reference / Number	Title / Description / Manufacturer	Spec. Section Title and Paragraph / Drawing Detail Reference

☐ Submitted for review and approval
☐ Resubmitted for review and approval
☐ Complies with contract requirements
☐ Will be available to meet construction schedule
☐ A/E review time included in construction schedule

☐ Substitution involved - Substitution request attached
☐ If substitution involved, submission includes point-by-point comparative data or preliminary details
☐ Items included in submission will be ordered immediately upon receipt of approval

Other remarks on above submission:

☐ One copy retained by sender

TRANSMITTAL B

To (A/E): _____ Attn: _____ Date Rec'd by Contractor: _____

From (Contractor): _____ By: _____ Date Trnsmt'd by Contractor: _____

☐ Approved
☐ Approved as noted

☐ Revise / Resubmit
☐ Rejected / Resubmit

Other remarks on above submission:

☐ One copy retained by sender

TRANSMITTAL C

To (Contractor): _____ Attn: _____ Date Rec'd by A/E: _____

From (A/E): _____ ☐ Other By: _____ Date Trnsmt'd by A/E: _____

☐ Approved
☐ Approved as noted
☐ Not subject to review
☐ No action required
☐ Revise / Resubmit
☐ Rejected / Resubmit
☐ Approved as noted / Resubmit

☐ Provide file copy with corrections identified
☐ Sepia copies only returned

☐ Point-by-point comparative data required to complete approval process

☐ Submission Incomplete / Resubmit

Other remarks on above submission:

☐ One copy retained by sender

TRANSMITTAL D

To (Subcontractor): _____ Attn: _____ Date Rec'd by Contractor: _____

From (Contractor): _____ By: _____ Date Trnsmt'd by Contractor: _____

Copies: ☐ Owner ☐ Consultants ☐ _____ ☐ _____ ☐ _____ ☐ One copy retained by sender

Copyright 1996, Construction Specifications Institute,
106 Madison Street, Alexandria, VA 22314-1791

September 1996
CSI Form 12.1A

Gipe Associates, Inc.
CONSULTING ENGINEERS

RELEASE OF ELECTRONIC MEDIA (DRAWINGS, SPECIFICATIONS, ETC.)

PROJECT:_____ DATE:_____

PROJECT NO:_____ RECORD DOCUMENT DATE _____

In accepting and utilizing any drawings or other data on any form of electronic media generated and provided by Gipe Associates, Inc., the Owner, its agents, other design professionals, or contractors covenants and agrees that all such drawings and data are instruments of service of Gipe Associates, Inc., and its Consultants (hereinafter referred to as the Engineer), who shall be deemed the author of the drawings and data, and shall retain all common law, statutory law and other rights, including copyrights.

For documentation purposes, the original electronic media (disks) will be retained by the Engineer, and both parties acknowledge that the referenced, dated Record Document is the actual contract deliverable. The Owner shall be permitted to retain copies of Drawings and Specifications prepared in electronic form for the Owner's convenience in connection with the specific project for which this information was prepared. Due to the potential that the information set forth on the electronic media can be modified, unintentionally or otherwise, the Engineer reserves the right to remove all indicia of its ownership and/or involvement from each document on the electronic media.

No warranty is made or implied as to the suitability of these files or the information they contain for such purpose. In all cases, the Contract Drawings and Specifications shall define all requirements. The Contractor is responsible for verification of Drawings and field conditions and/recognizing the impermanence and changeability of electronic files, assumes all responsibility for their use and alteration.

The Owner, its Agents or other design professionals further agree not to use these drawings and data, in whole or in part, for any purpose or project other than the project which is the subject of this Agreement. The Owner, its Agents, other design professionals, or contractors agree to waive all claims against the Engineer, and to the fullest extent permitted by law, to indemnify and hold the Engineer harmless from any damage, liability or cost, including reasonable attorneys' fees and cost of defense, arising from any changes or use of the Drawings and data made by anyone other than the Engineer without the prior written consent of the Engineer. Any such unauthorized use or reuse will be at the Owner's sole risk and without liability or legal exposure to the Engineer.

Under no circumstances shall transfer of the Drawings and other instruments of service on electronic media for use by the Owner, its Agents or other design professionals be deemed a sale by the Engineer, and the Engineer makes no warranties, either express or implied, of merchantability and fitness for any particular purpose.

_____
Accepted - Owner or Owner's Representative

_____
Printed Name and Title

_____
Date

8719 Brooks Drive, Easton, Maryland 21601 Tel: 410/822-8688 Fax: 410/822-6306

SECTION 014000 - QUALITY REQUIREMENTS

PART 1 - GENERAL

1.1 RELATED DOCUMENTS

A. Drawings and general provisions of the Contract, including General and Supplementary Conditions and other Division 01 Specification Sections, apply to this Section.

1.2 SUMMARY

A. Section includes administrative and procedural requirements for quality assurance and quality control.

B. Testing and inspecting services are required to verify compliance with requirements specified or indicated. These services do not relieve Contractor of responsibility for compliance with the Contract Document requirements.

1. Specific quality-assurance and -control requirements for individual construction activities are specified in the Sections that specify those activities. Requirements in those Sections may also cover production of standard products.
2. Specified tests, inspections, and related actions do not limit Contractor's other quality-assurance and -control procedures that facilitate compliance with the Contract Document requirements.
3. Requirements for Contractor to provide quality-assurance and -control services required by Engineer, Owner, or authorities having jurisdiction are not limited by provisions of this Section.

C. Related Sections:
1. Division 01 Section "Construction Progress Documentation" for developing a schedule of required tests and inspections.
2. Divisions 02 through 28 Sections for specific test and inspection requirements.

1.3 DEFINITIONS

A. Quality-Assurance Services: Activities, actions, and procedures performed before and during execution of the Work to guard against defects and deficiencies and substantiate that proposed construction will comply with requirements.

B. Quality-Control Services: Tests, inspections, procedures, and related actions during and after execution of the Work to evaluate that actual products incorporated into the Work and completed construction comply with requirements. Services do not include contract enforcement activities performed by Engineer.

C. Preconstruction Testing: Tests and inspections performed specifically for the Project before products and materials are incorporated into the Work to verify performance or compliance with specified criteria.

D. Product Testing: Tests and inspections that are performed by an NRTL, an NVLAP, or a testing agency qualified to conduct product testing and acceptable to authorities having jurisdiction, to establish product performance and compliance with specified requirements.

E. Source Quality-Control Testing: Tests and inspections that are performed at the source, i.e., plant, mill, factory, or shop.

F. Field Quality-Control Testing: Tests and inspections that are performed on-site for installation of the Work and for completed Work.

G. Testing Agency: An entity engaged to perform specific tests, inspections, or both. Testing laboratory shall mean the same as testing agency.

H. Installer/Applicator/Erector: Contractor or another entity engaged by Contractor as an employee, Subcontractor, or Sub-subcontractor, to perform a particular construction operation, including installation, erection, application, and similar operations.

1. Use of trade-specific terminology in referring to a trade or entity does not require that certain construction activities be performed by accredited or unionized individuals, or that requirements specified apply exclusively to specific trade or trades.

I. Experienced: When used with an entity or individual, "experienced" means having successfully completed a minimum of five previous projects similar in nature, size, and extent to this Project; being familiar with special requirements indicated; and having complied with requirements of authorities having jurisdiction.

1.4 CONFLICTING REQUIREMENTS

A. Referenced Standards: If compliance with two or more standards is specified and the standards establish different or conflicting requirements for minimum quantities or quality levels, comply with the most stringent requirement. Refer conflicting requirements that are different, but apparently equal, to Engineer for a decision before proceeding.

B. Minimum Quantity or Quality Levels: The quantity or quality level shown or specified shall be the minimum provided or performed. The actual installation may comply exactly with the minimum quantity or quality specified, or it may exceed the minimum within reasonable limits. To comply with these requirements, indicated numeric values are minimum or maximum, as appropriate, for the context of requirements. Refer uncertainties to Engineer for a decision before proceeding.

1.5 INFORMATIONAL SUBMITTALS

A. Contractor's Quality-Control Plan: For quality-assurance and quality-control activities and responsibilities.

B. Contractor's Quality-Control Manager Qualifications: For supervisory personnel.

C. Testing Agency Qualifications: For testing agencies specified in "Quality Assurance" Article to demonstrate their capabilities and experience. Include proof of qualifications in the form of a recent report on the inspection of the testing agency by a recognized authority.

D. Schedule of Tests and Inspections: Prepare in tabular form and include the following:

1. Specification Section number and title.
2. Entity responsible for performing tests and inspections.
3. Description of test and inspection.
4. Identification of applicable standards.
5. Identification of test and inspection methods.
6. Number of tests and inspections required.
7. Time schedule or time span for tests and inspections.
8. Requirements for obtaining samples.
9. Unique characteristics of each quality-control service.

1.6 REPORTS AND DOCUMENTS

A. Test and Inspection Reports: Prepare and submit certified written reports specified in other Sections. Include the following:

1. Date of issue.
2. Project title and number.
3. Name, address, and telephone number of testing agency.
4. Dates and locations of samples and tests or inspections.
5. Names of individuals making tests and inspections.
6. Description of the Work and test and inspection method.
7. Identification of product and Specification Section.
8. Complete test or inspection data.
9. Test and inspection results and an interpretation of test results.
10. Record of temperature and weather conditions at time of sample taking and testing and inspecting.
11. Comments or professional opinion on whether tested or inspected Work complies with the Contract Document requirements.
12. Name and signature of laboratory inspector.
13. Recommendations on retesting and reinspecting.

B. Manufacturer's Technical Representative's Field Reports: Prepare written information documenting manufacturer's technical representative's tests and inspections specified in other Sections. Include the following:

1. Name, address, and telephone number of technical representative making report.
2. Statement on condition of substrates and their acceptability for installation of product.
3. Statement that products at Project site comply with requirements.
4. Summary of installation procedures being followed, whether they comply with requirements and, if not, what corrective action was taken.
5. Results of operational and other tests and a statement of whether observed performance complies with requirements.
6. Statement whether conditions, products, and installation will affect warranty.
7. Other required items indicated in individual Specification Sections.

C. Factory-Authorized Service Representative's Reports: Prepare written information documenting manufacturer's factory-authorized service representative's tests and inspections specified in other Sections. Include the following:

1. Name, address, and telephone number of factory-authorized service representative making report.
2. Statement that equipment complies with requirements.
3. Results of operational and other tests and a statement of whether observed performance complies with requirements.
4. Statement whether conditions, products, and installation will affect warranty.
5. Other required items indicated in individual Specification Sections.

D. Permits, Licenses, and Certificates: For Owner's records, submit copies of permits, licenses, certifications, inspection reports, releases, jurisdictional settlements, notices, receipts for fee payments, judgments, correspondence, records, and similar documents, established for compliance with standards and regulations bearing on performance of the Work.

1.7 QUALITY ASSURANCE

A. General: Qualifications paragraphs in this article establish the minimum qualification levels required; individual Specification Sections specify additional requirements.

B. Manufacturer Qualifications: A firm experienced in manufacturing products or systems similar to those indicated for this Project and with a record of successful in-service performance, as well as sufficient production capacity to produce required units.

C. Fabricator Qualifications: A firm experienced in producing products similar to those indicated for this Project and with a record of successful in-service performance, as well as sufficient production capacity to produce required units.

D. Installer Qualifications: A firm or individual experienced in installing, erecting, or assembling work similar in material, design, and extent to that indicated for this Project, whose work has resulted in construction with a record of successful in-service performance.

E. Professional Engineer Qualifications: A professional engineer who is legally qualified to practice in jurisdiction where Project is located and who is experienced in providing engineering services of the kind indicated. Engineering services are defined as those performed for installations of the system, assembly, or product that are similar to those indicated for this Project in material, design, and extent.

F. Specialists: Certain Specification Sections require that specific construction activities shall be performed by entities who are recognized experts in those operations. Specialists shall satisfy qualification requirements indicated and shall be engaged for the activities indicated.

1. Requirements of authorities having jurisdiction shall supersede requirements for specialists.

G. Testing Agency Qualifications: An NRTL, an NVLAP, or an independent agency with the experience and capability to conduct testing and inspecting indicated, as documented according

to ASTM E 329; and with additional qualifications specified in individual Sections; and where required by authorities having jurisdiction, that is acceptable to authorities.

1. NRTL: A nationally recognized testing laboratory according to 29 CFR 1910.7.
2. NVLAP: A testing agency accredited according to NIST's National Voluntary Laboratory Accreditation Program.

H. Manufacturer's Technical Representative Qualifications: An authorized representative of manufacturer who is trained and approved by manufacturer to observe and inspect installation of manufacturer's products that are similar in material, design, and extent to those indicated for this Project.

I. Factory-Authorized Service Representative Qualifications: An authorized representative of manufacturer who is trained and approved by manufacturer to inspect installation of manufacturer's products that are similar in material, design, and extent to those indicated for this Project.

J. Preconstruction Testing: Where testing agency is indicated to perform preconstruction testing for compliance with specified requirements for performance and test methods, comply with the following:

1. Contractor responsibilities include the following:

   a. Provide test specimens representative of proposed products and construction.
   b. Submit specimens in a timely manner with sufficient time for testing and analyzing results to prevent delaying the Work.
   c. Provide sizes and configurations of test assemblies, mockups, and laboratory mockups to adequately demonstrate capability of products to comply with performance requirements.
   d. Build site-assembled test assemblies and mockups using installers who will perform same tasks for Project.
   e. Build laboratory mockups at testing facility using personnel, products, and methods of construction indicated for the completed Work.
   f. When testing is complete, remove test specimens, assemblies, mockups; do not reuse products on Project.

2. Testing Agency Responsibilities: Submit a certified written report of each test, inspection, and similar quality-assurance service to Engineer, with copy to Contractor. Interpret tests and inspections and state in each report whether tested and inspected work complies with or deviates from the Contract Documents.

1.8 QUALITY CONTROL

A. Owner Responsibilities: Where quality-control services are indicated as Owner's responsibility, Owner will engage a qualified testing agency to perform these services.

1. Owner will furnish Contractor with names, addresses, and telephone numbers of testing agencies engaged and a description of types of testing and inspecting they are engaged to perform.

2. Payment for these services will be made from testing and inspecting allowances, as authorized by Change Orders.
3. Costs for retesting and reinspecting construction that replaces or is necessitated by work that failed to comply with the Contract Documents will be charged to Contractor, and the Contract Sum will be adjusted by Change Order.

B. Contractor Responsibilities: Tests and inspections not explicitly assigned to Owner are Contractor's responsibility. Perform additional quality-control activities required to verify that the Work complies with requirements, whether specified or not.

1. Unless otherwise indicated, provide quality-control services specified and those required by authorities having jurisdiction. Perform quality-control services required of Contractor by authorities having jurisdiction, whether specified or not.
2. Where services are indicated as Contractor's responsibility, engage a qualified testing agency to perform these quality-control services.

   a. Contractor shall not employ same entity engaged by Owner, unless agreed to in writing by Owner.

3. Notify testing agencies at least 24 hours in advance of time when Work that requires testing or inspecting will be performed.
4. Where quality-control services are indicated as Contractor's responsibility, submit a certified written report, in duplicate, of each quality-control service.
5. Testing and inspecting requested by Contractor and not required by the Contract Documents are Contractor's responsibility.
6. Submit additional copies of each written report directly to authorities having jurisdiction, when they so direct.

C. Manufacturer's Field Services: Where indicated, engage a factory-authorized service representative to inspect field-assembled components and equipment installation, including service connections. Report results in writing as specified in Division 01 Section "Submittal Procedures."

D. Manufacturer's Technical Services: Where indicated, engage a manufacturer's technical representative to observe and inspect the Work. Manufacturer's technical representative's services include participation in preinstallation conferences, examination of substrates and conditions, verification of materials, observation of Installer activities, inspection of completed portions of the Work, and submittal of written reports.

E. Retesting/Reinspecting: Regardless of whether original tests or inspections were Contractor's responsibility, provide quality-control services, including retesting and reinspecting, for construction that replaced Work that failed to comply with the Contract Documents.

F. Testing Agency Responsibilities: Cooperate with Engineer and Contractor in performance of duties. Provide qualified personnel to perform required tests and inspections.

1. Notify Engineer and Contractor promptly of irregularities or deficiencies observed in the Work during performance of its services.
2. Determine the location from which test samples will be taken and in which in-situ tests are conducted.

3. Conduct and interpret tests and inspections and state in each report whether tested and inspected work complies with or deviates from requirements.
4. Submit a certified written report, in duplicate, of each test, inspection, and similar quality-control service through Contractor.
5. Do not release, revoke, alter, or increase the Contract Document requirements or approve or accept any portion of the Work.
6. Do not perform any duties of Contractor.

G. Associated Services: Cooperate with agencies performing required tests, inspections, and similar quality-control services, and provide reasonable auxiliary services as requested. Notify agency sufficiently in advance of operations to permit assignment of personnel. Provide the following:

1. Access to the Work.
2. Incidental labor and facilities necessary to facilitate tests and inspections.
3. Adequate quantities of representative samples of materials that require testing and inspecting. Assist agency in obtaining samples.
4. Facilities for storage and field curing of test samples.
5. Delivery of samples to testing agencies.
6. Preliminary design mix proposed for use for material mixes that require control by testing agency.
7. Security and protection for samples and for testing and inspecting equipment at Project site.

H. Coordination: Coordinate sequence of activities to accommodate required quality-assurance and -control services with a minimum of delay and to avoid necessity of removing and replacing construction to accommodate testing and inspecting.

1. Schedule times for tests, inspections, obtaining samples, and similar activities.

I. Schedule of Tests and Inspections: Prepare a schedule of tests, inspections, and similar quality-control services required by the Contract Documents. Coordinate and submit concurrently with Contractor's construction schedule. Update as the Work progresses. .

1. Distribution: Distribute schedule to Owner, Engineer, testing agencies, and each party involved in performance of portions of the Work where tests and inspections are required.

PART 2 - PRODUCTS (Not Used)

PART 3 - EXECUTION

3.1 TEST AND INSPECTION LOG

A. Prepare a record of tests and inspections. Include the following:

1. Date test or inspection was conducted.
2. Description of the Work tested or inspected.
3. Date test or inspection results were transmitted to Engineer.

4. Identification of testing agency or special inspector conducting test or inspection.

B. Maintain log at Project site. Post changes and modifications as they occur. Provide access to test and inspection log for Engineer's reference during normal working hours.

3.2 REPAIR AND PROTECTION

A. General: On completion of testing, inspecting, sample taking, and similar services, repair damaged construction and restore substrates and finishes.

1. Provide materials and comply with installation requirements specified in other Specification Sections or matching existing substrates and finishes. Restore patched areas and extend restoration into adjoining areas with durable seams that are as invisible as possible. Comply with the Contract Document requirements for cutting and patching in Division 01 Section "Execution Requirements."

B. Protect construction exposed by or for quality-control service activities.

C. Repair and protection are Contractor's responsibility, regardless of the assignment of responsibility for quality-control services.

END OF SECTION 014000

SECTION 015000 - TEMPORARY FACILITIES AND CONTROLS

PART 1 - GENERAL

1.1 RELATED DOCUMENTS

A. Drawings and general provisions of the Contract, including General and Supplementary Conditions and other Division 01 Specification Sections, apply to this Section.

1.2 SUMMARY

A. Section includes requirements for temporary utilities, support facilities, and security and protection facilities.

B. Related Sections:

1. Division 01 Section "Summary" for limitations on work restrictions and utility interruptions.

1.3 USE CHARGES

A. General: Installation and removal of and use charges for temporary facilities shall be included in the Contract Sum unless otherwise indicated. Allow other entities to use temporary services and facilities without cost, including, but not limited to, Owner's construction forces, Engineer, occupants of Project, testing agencies, and authorities having jurisdiction.

B. Water and Sewer Service from Existing System: Water from Owner's existing water system is available for use without metering and without payment of use charges. Provide connections and extensions of services as required for construction operations.

C. Electric Power Service from Existing System: Electric power from Owner's existing system is available for use without metering and without payment of use charges. Provide connections and extensions of services as required for construction operations.

1.4 INFORMATIONAL SUBMITTALS

A. Site Plan: A room in the building will be dedicated for use as a field office.

B. Moisture-Protection Plan: Describe procedures and controls for protecting materials and construction from water absorption and damage, including delivery, handling, and storage provisions for materials subject to water absorption or water damage, discarding water-damaged materials, protocols for mitigating water intrusion into completed Work, and replacing water damaged Work.

1.5 QUALITY ASSURANCE

A. Electric Service: Comply with NECA, NEMA, and UL standards and regulations for temporary electric service. Install service to comply with NFPA 70.

B. Tests and Inspections: Arrange for authorities having jurisdiction to test and inspect each temporary utility before use. Obtain required certifications and permits.

1.6 PROJECT CONDITIONS

A. Temporary Use of Permanent Facilities: Engage installer of each permanent service to assume responsibility for operation, maintenance, and protection of each permanent service during its use as a construction facility before Owner's acceptance, regardless of previously assigned responsibilities.

PART 2 - PRODUCTS

2.1 EQUIPMENT

A. Fire Extinguishers: Portable, UL rated; with class and extinguishing agent as required by locations and classes of fire exposures.

PART 3 - EXECUTION

3.1 INSTALLATION, GENERAL

A. Locate facilities where they will serve Project adequately and result in minimum interference with performance of the Work. Relocate and modify facilities as required by progress of the Work.

1. Locate facilities to limit site disturbance as specified in Division 01 Section "Summary."

B. Provide each facility ready for use when needed to avoid delay. Do not remove until facilities are no longer needed or are replaced by authorized use of completed permanent facilities.

3.2 TEMPORARY UTILITY INSTALLATION

A. General: Install temporary service or connect to existing service.

1. Arrange with utility company, Owner, and existing users for time when service can be interrupted, if necessary, to make connections for temporary services.

B. Water Service: Connect to Owner's existing water service facilities. Clean and maintain water service facilities in a condition acceptable to Owner. At Substantial Completion, restore these facilities to condition existing before initial use.

C. Sanitary Facilities: Owner will allow use of onsite sanitary facilities as long as they are properly maintained and kept clean.

D. Isolation of Work Areas in Occupied Facilities: Prevent dust, fumes, and odors from entering occupied areas.

E. Electric Power Service: Connect to Owner's existing electric power service. Maintain equipment in a condition acceptable to Owner.

F. Provide superintendent with cellular telephone for use when away from field office.

3.3 SUPPORT FACILITIES INSTALLATION

A. Traffic Controls: Comply with requirements of authorities having jurisdiction.

1. Protect existing site improvements to remain including curbs, pavement, and utilities.
2. Maintain access for fire-fighting equipment and access to fire hydrants.

B. Parking: Use designated areas of Owner's existing parking areas for construction personnel.

C. Waste Disposal Facilities: Provide waste-collection containers in sizes adequate to handle waste from construction operations. Comply with requirements of authorities having jurisdiction. Comply with Division 01 Section "Execution Requirements" for progress cleaning requirements.

D. Lifts and Hoists: Provide facilities necessary for hoisting materials and personnel.

1. Truck cranes and similar devices used for hoisting materials are considered "tools and equipment" and not temporary facilities.

3.4 SECURITY AND PROTECTION FACILITIES INSTALLATION

A. Environmental Protection: Provide protection, operate temporary facilities, and conduct construction as required to comply with environmental regulations and that minimize possible air, waterway, and subsoil contamination or pollution or other undesirable effects.

1. Comply with work restrictions specified in Division 01 Section "Summary."

B. Security Enclosure and Lockup: Install temporary enclosure around partially completed areas of construction. Provide lockable entrances to prevent unauthorized entrance, vandalism, theft, and similar violations of security. Lock entrances at end of each work day.

C. Barricades, Warning Signs, and Lights: Comply with requirements of authorities having jurisdiction for erecting structurally adequate barricades, including warning signs and lighting.

D. Temporary Egress: Maintain temporary egress from existing occupied facilities as indicated and as required by authorities having jurisdiction.

E. Temporary Fire Protection: Install and maintain temporary fire-protection facilities of types needed to protect against reasonably predictable and controllable fire losses. Comply with NFPA 241.

1. Prohibit smoking in construction areas.
2. Supervise welding operations, combustion-type temporary heating units, and similar sources of fire ignition according to requirements of authorities having jurisdiction.
3. Develop and supervise an overall fire-prevention and -protection program for personnel at Project site. Review needs with local fire department and establish procedures to be followed. Instruct personnel in methods and procedures. Post warnings and information.

3.5 OPERATION, TERMINATION, AND REMOVAL

A. Supervision: Enforce strict discipline in use of temporary facilities. To minimize waste and abuse, limit availability of temporary facilities to essential and intended uses.

B. Maintenance: Maintain facilities in good operating condition until removal.

C. Temporary Facility Changeover: Do not change over from using temporary security and protection facilities to permanent facilities until Substantial Completion.

D. Termination and Removal: Remove each temporary facility when need for its service has ended, when it has been replaced by authorized use of a permanent facility, or no later than Substantial Completion. Complete or, if necessary, restore permanent construction that may have been delayed because of interference with temporary facility. Repair damaged Work, clean exposed surfaces, and replace construction that cannot be satisfactorily repaired.

1. Materials and facilities that constitute temporary facilities are property of Contractor. Owner reserves right to take possession of Project identification signs.
2. At Substantial Completion, repair, renovate, and clean permanent facilities used during construction period. Comply with final cleaning requirements specified in Division 01 Section "Closeout Procedures."

END OF SECTION 015000

SECTION 016000 - PRODUCT REQUIREMENTS

PART 1 - GENERAL

1.1 RELATED DOCUMENTS

A. Drawings and general provisions of the Contract, including General and Supplementary Conditions and other Division 01 Specification Sections, apply to this Section.

1.2 SUMMARY

A. Section includes administrative and procedural requirements for selection of products for use in Project; product delivery, storage, and handling; manufacturers' standard warranties on products; special warranties; and comparable products.

B. Related Sections:

1. Division 01 Section "Substitution Procedures" for requests for substitutions.

1.3 DEFINITIONS

A. Products: Items obtained for incorporating into the Work, whether purchased for Project or taken from previously purchased stock. The term "product" includes the terms "material," "equipment," "system," and terms of similar intent.

1. Named Products: Items identified by manufacturer's product name, including make or model number or other designation shown or listed in manufacturer's published product literature, that is current as of date of the Contract Documents.
2. New Products: Items that have not previously been incorporated into another project or facility. Products salvaged or recycled from other projects are not considered new products.
3. Comparable Product: Product that is demonstrated and approved through submittal process to have the indicated qualities related to type, function, dimension, in-service performance, physical properties, appearance, and other characteristics that equal or exceed those of specified product.

B. Basis-of-Design Product Specification: A specification in which a specific manufacturer's product is named and accompanied by the words "basis-of-design product," including make or model number or other designation, to establish the significant qualities related to type, function, dimension, in-service performance, physical properties, appearance, and other characteristics for purposes of evaluating comparable products of additional manufacturers named in the specification.

1.4 ACTION SUBMITTALS

A. Comparable Product Requests: Submit request for consideration of each comparable product. Identify product or fabrication or installation method to be replaced. Include Specification Section number and title and Drawing numbers and titles.

1. Include data to indicate compliance with the requirements specified in "Comparable Products" Article.
2. Engineer's Action: If necessary, Engineer will request additional information or documentation for evaluation within one week of receipt of a comparable product request. Engineer will notify Contractor of approval or rejection of proposed comparable product request within 15 days of receipt of request, or seven days of receipt of additional information or documentation, whichever is later.

   a. Form of Approval: As specified in Division 01 Section "Submittal Procedures."
   b. Use product specified if Engineer does not issue a decision on use of a comparable product request within time allocated.

B. Basis-of-Design Product Specification Submittal: Comply with requirements in Division 01 Section "Submittal Procedures." Show compliance with requirements.

1.5 QUALITY ASSURANCE

A. Compatibility of Options: If Contractor is given option of selecting between two or more products for use on Project, select product compatible with products previously selected, even if previously selected products were also options.

1. Each contractor is responsible for providing products and construction methods compatible with products and construction methods of other contractors.
2. If a dispute arises between contractors over concurrently selectable but incompatible products, Engineer will determine which products shall be used.

1.6 PRODUCT DELIVERY, STORAGE, AND HANDLING

A. Deliver, store, and handle products using means and methods that will prevent damage, deterioration, and loss, including theft and vandalism. Comply with manufacturer's written instructions.

B. Delivery and Handling:

1. Schedule delivery to minimize long-term storage at Project site and to prevent overcrowding of construction spaces.
2. Coordinate delivery with installation time to ensure minimum holding time for items that are flammable, hazardous, easily damaged, or sensitive to deterioration, theft, and other losses.
3. Deliver products to Project site in an undamaged condition in manufacturer's original sealed container or other packaging system, complete with labels and instructions for handling, storing, unpacking, protecting, and installing.

4. Inspect products on delivery to determine compliance with the Contract Documents and to determine that products are undamaged and properly protected.

C. Storage:

1. Store products to allow for inspection and measurement of quantity or counting of units.
2. Store materials in a manner that will not endanger Project structure.
3. Store products that are subject to damage by the elements, under cover in a weathertight enclosure above ground, with ventilation adequate to prevent condensation.
4. Store foam plastic from exposure to sunlight, except to extent necessary for period of installation and concealment.
5. Comply with product manufacturer's written instructions for temperature, humidity, ventilation, and weather-protection requirements for storage.
6. Protect stored products from damage and liquids from freezing.
7. Provide a secure location and enclosure at Project site for storage of materials and equipment by Owner's construction forces. Coordinate location with Owner.

1.7 PRODUCT WARRANTIES

A. Warranties specified in other Sections shall be in addition to, and run concurrent with, other warranties required by the Contract Documents. Manufacturer's disclaimers and limitations on product warranties do not relieve Contractor of obligations under requirements of the Contract Documents.

1. Manufacturer's Warranty: Written warranty furnished by individual manufacturer for a particular product and specifically endorsed by manufacturer to Owner.
2. Special Warranty: Written warranty required by the Contract Documents to provide specific rights for Owner.

B. Special Warranties: Prepare a written document that contains appropriate terms and identification, ready for execution.

1. Manufacturer's Standard Form: Modified to include Project-specific information and properly executed.
2. Specified Form: When specified forms are included with the Specifications, prepare a written document using indicated form properly executed.
3. Refer to Divisions 02 through 28. Sections for specific content requirements and particular requirements for submitting special warranties.

C. Submittal Time: Comply with requirements in Division 01 Section "Closeout Procedures."

PART 2 - PRODUCTS

2.1 PRODUCT SELECTION PROCEDURES

A. General Product Requirements: Provide products that comply with the Contract Documents, are undamaged and, unless otherwise indicated, are new at time of installation.

1. Provide products complete with accessories, trim, finish, fasteners, and other items needed for a complete installation and indicated use and effect.
2. Standard Products: If available, and unless custom products or nonstandard options are specified, provide standard products of types that have been produced and used successfully in similar situations on other projects.
3. Owner reserves the right to limit selection to products with warranties not in conflict with requirements of the Contract Documents.
4. Where products are accompanied by the term "as selected," Engineer will make selection.
5. Descriptive, performance, and reference standard requirements in the Specifications establish salient characteristics of products.
6. Or Equal: For products specified by name and accompanied by the term "or equal," or "or approved equal," or "or approved," comply with requirements in "Comparable Products" Article to obtain approval for use of an unnamed product.

B. Product Selection Procedures:

1. Product: Where Specifications name a single manufacturer and product, provide the named product that complies with requirements. Comparable products or substitutions for Contractor's convenience will not be considered.
2. Manufacturer/Source: Where Specifications name a single manufacturer or source, provide a product by the named manufacturer or source that complies with requirements. Comparable products or substitutions for Contractor's convenience will not be considered.
3. Products:

    a. Restricted List: Where Specifications include a list of names of both manufacturers and products, provide one of the products listed that complies with requirements. Comparable products or substitutions for Contractor's convenience will not be considered.
    b. Nonrestricted List: Where Specifications include a list of names of both available manufacturers and products, provide one of the products listed, or an unnamed product, that complies with requirements. Comply with requirements in "Comparable Products" Article for consideration of an unnamed product.

4. Manufacturers:

    a. Restricted List: Where Specifications include a list of manufacturers' names, provide a product by one of the manufacturers listed that complies with requirements. Comparable products or substitutions for Contractor's convenience will not be considered.
    b. Nonrestricted List: Where Specifications include a list of available manufacturers, provide a product by one of the manufacturers listed, or a product by an unnamed manufacturer, that complies with requirements. Comply with requirements in "Comparable Products" Article for consideration of an unnamed manufacturer's product.

5. Basis-of-Design Product: Where Specifications name a product, or refer to a product indicated on Drawings, and include a list of manufacturers, provide the specified or indicated product or a comparable product by one of the other named manufacturers. Drawings and Specifications indicate sizes, profiles, dimensions, and other characteristics that are based on the product named. Comply with requirements in "Comparable

Products" Article for consideration of an unnamed product by one of the other named manufacturers.

C. Visual Matching Specification: Where Specifications require "match Engineer's sample", provide a product that complies with requirements and matches Engineer's sample. Engineer's decision will be final on whether a proposed product matches.

1. If no product available within specified category matches and complies with other specified requirements, comply with requirements in Division 01 Section "Substitution Procedures" for proposal of product.

D. Visual Selection Specification: Where Specifications include the phrase "as selected by Engineer from manufacturer's full range" or similar phrase, select a product that complies with requirements. Engineer will select color, gloss, pattern, density, or texture from manufacturer's product line that includes both standard and premium items.

2.2 COMPARABLE PRODUCTS

A. Conditions for Consideration: Engineer will consider Contractor's request for comparable product when the following conditions are satisfied. If the following conditions are not satisfied, Engineer may return requests without action, except to record noncompliance with these requirements:

1. Evidence that the proposed product does not require revisions to the Contract Documents, that it is consistent with the Contract Documents and will produce the indicated results, and that it is compatible with other portions of the Work.
2. Detailed comparison of significant qualities of proposed product with those named in the Specifications. Significant qualities include attributes such as performance, weight, size, durability, visual effect, and specific features and requirements indicated.
3. Evidence that proposed product provides specified warranty.
4. List of similar installations for completed projects with project names and addresses and names and addresses of Engineers and owners, if requested.
5. Samples, if requested.

PART 3 - EXECUTION (Not Used)

END OF SECTION 016000

Advancement of Construction Technology

SUBSTITUTION REQUEST
(After the Bidding Phase)

Project: _____ Substitution Request Number: _____

_____ From: _____

To: _____ Date: _____

_____ A/E Project Number: _____

Re: _____ Contract For: _____

Specification Title: _____ Description: _____

Section: _____ Page: _____ Article/Paragraph: _____

Proposed Substitution: _____

Manufacturer: _____ Address: _____ Phone: _____

Trade Name: _____ Model No.: _____

Installer: _____ Address: _____ Phone: _____

History: ☐ New product ☐ 2-5 years old ☐ 5-10 yrs old ☐ More than 10 years old

Differences between proposed substitution and specified product: _____

_____

_____

☐ Point-by-point comparative data attached - REQUIRED BY A/E

Reason for not providing specified item: _____

_____

Similar Installation:

Project: _____ Architect: _____

Address: _____ Owner: _____

_____ Date Installed: _____

Proposed substitution affects other parts of Work: ☐ No ☐ Yes; explain _____

_____

Savings to Owner for accepting substitution: _____ ($ _____).

Proposed substitution changes Contract Time: ☐ No ☐ Yes [Add] [Deduct] _____days.

Supporting Data Attached: ☐ Drawings ☐ Product Data ☐ Samples ☐ Tests ☐ Reports ☐ _____

Copyright 1996, Construction Specification Institute,
601 Madison Street, Alexandria, VA 22314-1791

SUBSTITUTION REQUEST
(Continued)

The Undersigned certifies:

- Proposed substitution has been fully investigated and determined to be equal or superior in all respects to specified product.
- Same warranty will be furnished for proposed substitution as for specified product.
- Same maintenance service and source of replacement parts, as applicable, is available.
- Proposed substitution will have no adverse effect on other trades and will not affect or delay progress schedule.
- Cost data as stated above is complete. Claims for additional costs related to accepted substitution which may subsequently become apparent are to be waived.
- Proposed substitution does not affect dimensions and functional clearances.
- Payment will be made for changes to building design, including A/E design, detailing, and construction costs caused by the substitution.
- Coordination, installation, and changes in the Work as necessary for accepted substitution will be complete in all respects.

Submitted by: _____

Signed by: _____

Firm: _____

Address: _____

_____

Telephone: _____

Attachments: _____

_____

_____

_____

A/E's REVIEW AND ACTION

☐ Substitution approved - Make submittals in accordance with Specification Section 01330.
☐ Substitution approved as noted - Make submittals in accordance with Specification Section 01330.
☐ Substitution rejected - Use specified materials.
☐ Substitution Request received too late - Use specified materials.

Signed by: Date:

Additional Comments: ☐ Contractor ☐ Subcontractor ☐ Supplier ☐ Manufacturer ☐ A/E ☐ _____

_____

_____

_____

_____

_____

_____

_____

Copyright 1996, Construction Specification Institute,
601 Madison Street, Alexandria, VA 22314-1791

SECTION 017300 - EXECUTION REQUIREMENTS

PART 1 - GENERAL

1.1 RELATED DOCUMENTS

A. Drawings and general provisions of the Contract, including General and Supplementary Conditions and other Division 01 Specification Sections, apply to this Section.

1.2 SUMMARY

A. Section includes general administrative and procedural requirements governing execution of the Work including, but not limited to, the following:

1. Installation of the Work.
2. Cutting and patching.
3. Coordination of Owner-installed products.
4. Progress cleaning.
5. Starting and adjusting.
6. Protection of installed construction.
7. Correction of the Work.

B. Related Sections:

1. Division 01 Section "Submittal Procedures" for submitting surveys.
2. Division 01 Section "Selective Demolition" for demolition and removal of selected portions of the building.
3. Division 01 Section "Closeout Procedures" for submitting final property survey with Project Record Documents, recording of Owner-accepted deviations from indicated lines and levels, and final cleaning.
4. Division 07 Section "Through-Penetration Firestop Systems" for patching penetrations in fire-rated construction.

1.3 DEFINITIONS

A. Cutting: Removal of in-place construction necessary to permit installation or performance of other work.

B. Patching: Fitting and repair work required to restore construction to original conditions after installation of other work.

1.4 QUALITY ASSURANCE

A. Cutting and Patching: Comply with requirements for and limitations on cutting and patching of construction elements.

1. Structural Elements: When cutting and patching structural elements, notify Engineer of locations and details of cutting and await directions from the Architect before proceeding. Shore, brace, and support structural element during cutting and patching. Do not cut and patch structural elements in a manner that could change their load-carrying capacity or increase deflection

2. Operational Elements: Do not cut and patch operating elements and related components in a manner that results in reducing their capacity to perform as intended or that results in increased maintenance or decreased operational life or safety. Operational elements include the following:

   a. Primary operational systems and equipment.
   b. Fire separation assemblies.
   c. Air or smoke barriers.
   d. Fire-suppression systems.
   e. Mechanical systems piping and ducts.
   f. Control systems.
   g. Communication systems.
   h. Electrical wiring systems.
   i. Operating systems of special construction.

3. Other Construction Elements: Do not cut and patch other construction elements or components in a manner that could change their load-carrying capacity, that results in reducing their capacity to perform as intended, or that results in increased maintenance or decreased operational life or safety. Other construction elements include but are not limited to the following:

   a. Water, moisture, or vapor barriers.
   b. Membranes and flashings.
   c. Exterior curtain-wall construction.
   d. Equipment supports.
   e. Piping, ductwork, vessels, and equipment.
   f. Noise- and vibration-control elements and systems.

4. Visual Elements: Do not cut and patch construction in a manner that results in visual evidence of cutting and patching. Do not cut and patch exposed construction in a manner that would, in Engineer's opinion, reduce the building's aesthetic qualities. Remove and replace construction that has been cut and patched in a visually unsatisfactory manner.

B. Cutting and Patching Conference: Before proceeding, meet at Project site with parties involved in cutting and patching, including mechanical and electrical trades. Review areas of potential interference and conflict. Coordinate procedures and resolve potential conflicts before proceeding.

C. Manufacturer's Installation Instructions: Obtain and maintain on-site manufacturer's written recommendations and instructions for installation of products and equipment.

1.5 WARRANTY

A. Existing Warranties: Remove, replace, patch, and repair materials and surfaces cut or damaged during installation or cutting and patching operations, by methods and with materials so as not to void existing warranties.

PART 2 - PRODUCTS

2.1 MATERIALS

A. General: Comply with requirements specified in other Sections.

B. In-Place Materials: Use materials for patching identical to in-place materials. For exposed surfaces, use materials that visually match in-place adjacent surfaces to the fullest extent possible.

1. If identical materials are unavailable or cannot be used, use materials that, when installed, will provide a match acceptable to the Engineer for the visual and functional performance of in-place materials.

PART 3 - EXECUTION

3.1 EXAMINATION

A. Existing Conditions: The existence and location of underground and other utilities and construction indicated as existing are not guaranteed. Before beginning sitework, investigate and verify the existence and location of underground utilities, mechanical and electrical systems, and other construction affecting the Work.

1. Before construction, verify the location and invert elevation at points of connection of sanitary sewer, storm sewer, and water-service piping; underground electrical services, and other utilities.
2. Furnish location data for work related to Project that must be performed by public utilities serving Project site.

B. Examination and Acceptance of Conditions: Before proceeding with each component of the Work, examine substrates, areas, and conditions, with Installer or Applicator present where indicated, for compliance with requirements for installation tolerances and other conditions affecting performance. Record observations.

1. Written Report: Where a written report listing conditions detrimental to performance of the Work is required by other Sections, include the following:

a. Description of the Work.
b. List of detrimental conditions, including substrates.
c. List of unacceptable installation tolerances.
d. Recommended corrections.

2. Verify compatibility with and suitability of substrates, including compatibility with existing finishes or primers.
3. Examine roughing-in for mechanical and electrical systems to verify actual locations of connections before equipment and fixture installation.
4. Examine walls, floors, and roofs for suitable conditions where products and systems are to be installed.
5. Proceed with installation only after unsatisfactory conditions have been corrected. Proceeding with the Work indicates acceptance of surfaces and conditions.

3.2 PREPARATION

A. Existing Utility Information: Furnish information to local utility that is necessary to adjust, move, or relocate existing utility structures, utility poles, lines, services, or other utility appurtenances located in or affected by construction. Coordinate with authorities having jurisdiction.

B. Field Measurements: Take field measurements as required to fit the Work properly. Recheck measurements before installing each product. Where portions of the Work are indicated to fit to other construction, verify dimensions of other construction by field measurements before fabrication. Coordinate fabrication schedule with construction progress to avoid delaying the Work.

C. Space Requirements: Verify space requirements and dimensions of items shown diagrammatically on Drawings.

D. Review of Contract Documents and Field Conditions: Immediately on discovery of the need for clarification of the Contract Documents caused by differing field conditions outside the control of the Contractor, submit a request for information to Engineer according to requirements in Division 01 Section "Project Management and Coordination."

E. Surface and Substrate Preparation: Comply with manufacturer's recommendations for preparation of substrates to receive subsequent work.

3.3 INSTALLATION

A. General: Locate the Work and components of the Work accurately, in correct alignment and elevation, as indicated.

1. Make vertical work plumb and make horizontal work level.
2. Where space is limited, install components to maximize space available for maintenance and ease of removal for replacement.
3. Conceal pipes, ducts, and wiring in finished areas, unless otherwise indicated.
4. Maintain minimum headroom clearance of 96 inches (2440 mm) in occupied spaces and 90 inches (2300 mm) in unoccupied spaces.

B. Comply with manufacturer's written instructions and recommendations for installing products in applications indicated.

C. Install products at the time and under conditions that will ensure the best possible results. Maintain conditions required for product performance until Substantial Completion.

D. Conduct construction operations so no part of the Work is subjected to damaging operations or loading in excess of that expected during normal conditions of occupancy.

E. Tools and Equipment: Do not use tools or equipment that produce harmful noise levels.

F. Templates: Obtain and distribute to the parties involved templates for work specified to be factory prepared and field installed. Check Shop Drawings of other work to confirm that adequate provisions are made for locating and installing products to comply with indicated requirements.

G. Attachment: Provide blocking and attachment plates and anchors and fasteners of adequate size and number to securely anchor each component in place, accurately located and aligned with other portions of the Work. Where size and type of attachments are not indicated, verify size and type required for load conditions.

1. Mounting Heights: Where mounting heights are not indicated, mount components at heights directed by Engineer.
2. Allow for building movement, including thermal expansion and contraction.
3. Coordinate installation of anchorages. Furnish setting drawings, templates, and directions for installing anchorages, including sleeves, concrete inserts, anchor bolts, and items with integral anchors, that are to be embedded in concrete or masonry. Deliver such items to Project site in time for installation.

H. Joints: Make joints of uniform width. Where joint locations in exposed work are not indicated, arrange joints for the best visual effect. Fit exposed connections together to form hairline joints.

I. Hazardous Materials: Use products, cleaners, and installation materials that are not considered hazardous.

3.4 CUTTING AND PATCHING

A. Cutting and Patching, General: Employ skilled workers to perform cutting and patching. Proceed with cutting and patching at the earliest feasible time, and complete without delay.

1. Cut in-place construction to provide for installation of other components or performance of other construction, and subsequently patch as required to restore surfaces to their original condition.

B. Temporary Support: Provide temporary support of work to be cut.

C. Protection: Protect in-place construction during cutting and patching to prevent damage. Provide protection from adverse weather conditions for portions of Project that might be exposed during cutting and patching operations.

D. Adjacent Occupied Areas: Where interference with use of adjoining areas or interruption of free passage to adjoining areas is unavoidable, coordinate cutting and patching in accordance with requirements of Division 01 Section "Summary."

E. Existing Utility Services and Mechanical/Electrical Systems: Where existing services/systems are required to be removed, relocated, or abandoned, bypass such services/systems before cutting to minimize interruption to occupied areas.

F. Cutting: Cut in-place construction by sawing, drilling, breaking, chipping, grinding, and similar operations, including excavation, using methods least likely to damage elements retained or adjoining construction. If possible, review proposed procedures with original Installer; comply with original Installer's written recommendations.

1. In general, use hand or small power tools designed for sawing and grinding, not hammering and chopping. Cut holes and slots neatly to minimum size required, and with minimum disturbance of adjacent surfaces. Temporarily cover openings when not in use.
2. Finished Surfaces: Cut or drill from the exposed or finished side into concealed surfaces.
3. Concrete and Masonry: Cut using a cutting machine, such as an abrasive saw or a diamond-core drill.
4. Excavating and Backfilling: Comply with requirements in applicable Division 2 Sections where required by cutting and patching operations.
5. Mechanical and Electrical Services: Cut off pipe or conduit in walls or partitions to be removed. Cap, valve, or plug and seal remaining portion of pipe or conduit to prevent entrance of moisture or other foreign matter after cutting.
6. Proceed with patching after construction operations requiring cutting are complete.

G. Patching: Patch construction by filling, repairing, refinishing, closing up, and similar operations following performance of other work. Patch with durable seams that are as invisible as practicable. Provide materials and comply with installation requirements specified in other Sections, where applicable.

1. Inspection: Where feasible, test and inspect patched areas after completion to demonstrate physical integrity of installation.
2. Exposed Finishes: Restore exposed finishes of patched areas and extend finish restoration into retained adjoining construction in a manner that will minimize evidence of patching and refinishing.

    a. Clean piping, conduit, and similar features before applying paint or other finishing materials.
    b. Restore damaged pipe covering to its original condition.

3. Floors and Walls: Where walls or partitions that are removed extend one finished area into another, patch and repair floor and wall surfaces in the new space. Provide an even surface of uniform finish, color, texture, and appearance. Remove in-place floor and wall coverings and replace with new materials, if necessary, to achieve uniform color and appearance.

    a. Where patching occurs in a painted surface, prepare substrate and apply primer and intermediate paint coats appropriate for substrate over the patch, and apply final paint coat over entire unbroken surface containing the patch. Provide additional coats until patch blends with adjacent surfaces.

4. Ceilings: Patch, repair, or rehang in-place ceilings as necessary to provide an even-plane surface of uniform appearance.

5. Exterior Building Enclosure: Patch components in a manner that restores enclosure to a weathertight condition.

H. Cleaning: Clean areas and spaces where cutting and patching are performed. Remove paint, mortar, oils, putty, and similar materials from adjacent finished surfaces.

3.5 PROGRESS CLEANING

A. General: Clean Project site and work areas daily, including common areas. Enforce requirements strictly. Dispose of materials lawfully.

1. Comply with requirements in NFPA 241 for removal of combustible waste materials and debris.
2. Do not hold waste materials more than seven days during normal weather or three days if the temperature is expected to rise above 80 deg F (27 deg C).
3. Containerize hazardous and unsanitary waste materials separately from other waste. Mark containers appropriately and dispose of legally, according to regulations.

   a. Utilize containers intended for holding waste materials of type to be stored.

4. Coordinate progress cleaning for joint-use areas where more than one installer has worked.

B. Site: Maintain Project site free of waste materials and debris.

C. Work Areas: Clean areas where work is in progress to the level of cleanliness necessary for proper execution of the Work.

1. Remove liquid spills promptly.
2. Where dust would impair proper execution of the Work, broom-clean or vacuum the entire work area, as appropriate.

D. Installed Work: Keep installed work clean. Clean installed surfaces according to written instructions of manufacturer or fabricator of product installed, using only cleaning materials specifically recommended. If specific cleaning materials are not recommended, use cleaning materials that are not hazardous to health or property and that will not damage exposed surfaces.

E. Concealed Spaces: Remove debris from concealed spaces before enclosing the space.

F. Exposed Surfaces in Finished Areas: Clean exposed surfaces and protect as necessary to ensure freedom from damage and deterioration at time of Substantial Completion.

G. Waste Disposal: Do not bury or burn waste materials on-site. Do not wash waste materials down sewers or into waterways. Comply with waste disposal requirements in Division 01 Section "Temporary Facilities and Controls".

H. During handling and installation, clean and protect construction in progress and adjoining materials already in place. Apply protective covering where required to ensure protection from damage or deterioration at Substantial Completion.

I. Clean and provide maintenance on completed construction as frequently as necessary through the remainder of the construction period. Adjust and lubricate operable components to ensure operability without damaging effects.

J. Limiting Exposures: Supervise construction operations to assure that no part of the construction, completed or in progress, is subject to harmful, dangerous, damaging, or otherwise deleterious exposure during the construction period.

3.6 STARTING AND ADJUSTING

A. Coordinate startup and adjusting of equipment and operating components with requirements in Division 01 Section "General Commissioning Requirements."

B. Start equipment and operating components to confirm proper operation. Remove malfunctioning units, replace with new units, and retest.

C. Adjust equipment for proper operation. Adjust operating components for proper operation without binding.

D. Test each piece of equipment to verify proper operation. Test and adjust controls and safeties. Replace damaged and malfunctioning controls and equipment.

E. Manufacturer's Field Service: Comply with qualification requirements in Division 01 Section "Quality Requirements."

3.7 PROTECTION OF INSTALLED CONSTRUCTION

A. Provide final protection and maintain conditions that ensure installed Work is without damage or deterioration at time of Substantial Completion.

B. Comply with manufacturer's written instructions for temperature and relative humidity.

3.8 CORRECTION OF THE WORK

A. Repair or remove and replace defective construction. Restore damaged substrates and finishes.

1. Repairing includes replacing defective parts, refinishing damaged surfaces, touching up with matching materials, and properly adjusting operating equipment.

B. Restore permanent facilities used during construction to their specified condition.

C. Remove and replace damaged surfaces that are exposed to view if surfaces cannot be repaired without visible evidence of repair.

D. Repair components that do not operate properly. Remove and replace operating components that cannot be repaired.

E. Remove and replace chipped, scratched, and broken glass or reflective surfaces.

END OF SECTION 017300

Advancement of Construction Technology

REQUEST FOR INTERPRETATION

Project: _____ R.F.I. Number: _____

_____ From: _____

To: _____ Date: _____

_____ A/E Project Number: _____

Re: _____ Contract For: _____

Specification Section: Paragraph: Drawing Reference: Detail:

Request:

Signed by: Date:

Response:

☐ Attachments

Response From: To: Date Rec'd: Date Ret'd:

Signed by: Date:

Copies: ☐ Owner ☐ Consultants ☐ _____ ☐ _____ ☐ _____ ☐ _____ ☐ File

Copyright 1994, Construction Specifications Institute,
601 Madison Street, Alexandria, VA 22314-1791

July 1994
CSI Form 13.2A

SECTION 017310 - CUTTING AND PATCHING

PART 1 - GENERAL

1.1 RELATED DOCUMENTS

A. Drawings and general provisions of the Contract, including General and Supplementary Conditions and other Division 01 Specification Sections, apply to this Section.

1.2 SUMMARY

A. This Section includes procedural requirements for cutting and patching.

B. Related Sections include the following:

1. Division 01 Section "Selective Demolition" for demolition of selected portions of the building.
2. Divisions 02 through 28 Sections for specific requirements and limitations applicable to cutting and patching individual parts of the Work.

1.3 DEFINITIONS

A. Cutting: Removal of in-place construction necessary to permit installation or performance of other Work.

B. Patching: Fitting and repair work required to restore surfaces to original conditions after installation of other Work.

1.4 SUBMITTALS

A. Cutting and Patching Proposal: Submit a proposal describing procedures at least seven (7) days before the time cutting and patching will be performed, requesting approval to proceed. Include the following information:

1. Extent: Describe cutting and patching, show how they will be performed, and indicate why they cannot be avoided.
2. Changes to In-Place Construction: Describe anticipated results. Include changes to structural elements and operating components as well as changes in building's appearance and other significant visual elements.
3. Products: List products to be used and firms or entities that will perform the Work.
4. Dates: Indicate when cutting and patching will be performed.
5. Utility Services and Mechanical/Electrical Systems: List services/systems that cutting and patching procedures will disturb or affect. List services/systems that will be relocated and those that will be temporarily out of service. Indicate how long services/systems will be disrupted.

6. Structural Elements: Where cutting and patching involve adding reinforcement to structural elements, submit details and engineering calculations showing integration of reinforcement with original structure.
7. Engineer's Approval: Obtain approval of cutting and patching proposal before cutting and patching. Approval does not waive right to later require removal and replacement of unsatisfactory work.

1.5 QUALITY ASSURANCE

A. Structural Elements: Do not cut and patch structural elements in a manner that could change their load-carrying capacity or load-deflection ratio.

B. Operational Elements: Do not cut and patch operating elements and related components in a manner that results in reducing their capacity to perform as intended or that results in increased maintenance or decreased operational life or safety.

1. Primary operational systems and equipment.
2. Air or smoke barriers.
3. Fire-suppression systems.
4. Mechanical systems piping and ducts.
5. Control systems.
6. Communication systems.
7. Conveying systems.
8. Electrical wiring systems.

C. Miscellaneous Elements: Do not cut and patch miscellaneous elements or related components in a manner that could change their load-carrying capacity, that results in reducing their capacity to perform as intended, or that results in increased maintenance or decreased operational life or safety. Miscellaneous elements include the following:

1. Water, moisture, or vapor barriers.
2. Membranes and flashings.
3. Exterior curtain-wall construction.
4. Equipment supports.
5. Piping, ductwork, vessels, and equipment.
6. Noise- and vibration-control elements and systems.

D. Visual Requirements: Do not cut and patch construction in a manner that results in visual evidence of cutting and patching. Do not cut and patch construction exposed on the exterior or in occupied spaces in a manner that would, in Engineer's opinion, reduce the building's aesthetic qualities. Remove and replace construction that has been cut and patched in a visually unsatisfactory manner.

E. Cutting and Patching Conference: Before proceeding, meet at Project site with parties involved in cutting and patching, including mechanical and electrical trades. Review areas of potential interference and conflict. Coordinate procedures and resolve potential conflicts before proceeding.

1.6 WARRANTY

A. Existing Warranties: Remove, replace, patch, and repair materials and surfaces cut or damaged during cutting and patching operations, by methods and with materials so as not to void existing warranties.

PART 2 - PRODUCTS

2.1 MATERIALS

A. General: Comply with requirements specified in other Sections.

B. In-Place Materials: Use materials identical to in-place materials. For exposed surfaces, use materials that visually match in-place adjacent surfaces to the fullest extent possible.

1. If identical materials are unavailable or cannot be used, use materials that, when installed, will match the visual and functional performance of in-place materials.

PART 3 - EXECUTION

3.1 EXAMINATION

A. Examine surfaces to be cut and patched and conditions under which cutting and patching are to be performed.

1. Compatibility: Before patching, verify compatibility with and suitability of substrates, including compatibility with in-place finishes or primers.
2. Proceed with installation only after unsafe or unsatisfactory conditions have been corrected.

3.2 PREPARATION

A. Temporary Support: Provide temporary support of Work to be cut.

B. Protection: Protect in-place construction during cutting and patching to prevent damage. Provide protection from adverse weather conditions for portions of Project that might be exposed during cutting and patching operations.

C. Adjoining Areas: Avoid interference with use of adjoining areas or interruption of free passage to adjoining areas.

D. Existing Utility Services and Mechanical/Electrical Systems: Where existing services/systems are required to be removed, relocated, or abandoned, bypass such services/systems before cutting to minimize interruption to occupied areas.

3.3 PERFORMANCE

A. General: Employ skilled workers to perform cutting and patching. Proceed with cutting and patching at the earliest feasible time, and complete without delay.

1. Cut in-place construction to provide for installation of other components or performance of other construction, and subsequently patch as required to restore surfaces to their original condition.

B. Cutting: Cut in-place construction by sawing, drilling, breaking, chipping, grinding, and similar operations, including excavation, using methods least likely to damage elements retained or adjoining construction. If possible, review proposed procedures with original Installer; comply with original Installer's written recommendations.

1. In general, use hand or small power tools designed for sawing and grinding, not hammering and chopping. Cut holes and slots as small as possible, neatly to size required, and with minimum disturbance of adjacent surfaces. Temporarily cover openings when not in use.
2. Finished Surfaces: Cut or drill from the exposed or finished side into concealed surfaces.
3. Concrete Masonry: Cut using a cutting machine, such as an abrasive saw or a diamond-core drill.
4. Mechanical and Electrical Services: Cut off pipe or conduit in walls or partitions to be removed. Cap, valve, or plug and seal remaining portion of pipe or conduit to prevent entrance of moisture or other foreign matter after cutting.
5. Proceed with patching after construction operations requiring cutting are complete.

C. Patching: Patch construction by filling, repairing, refinishing, closing up, and similar operations following performance of other Work. Patch with durable seams that are as invisible as possible. Provide materials and comply with installation requirements specified in other Sections.

1. Inspection: Where feasible, test and inspect patched areas after completion to demonstrate integrity of installation.
2. Exposed Finishes: Restore exposed finishes of patched areas and extend finish restoration into retained adjoining construction in a manner that will eliminate evidence of patching and refinishing.

   a. Clean piping, conduit, and similar features before applying paint or other finishing materials.
   b. Restore damaged pipe covering to its original condition.

3. Ceilings: Patch, repair, or rehang in-place ceilings as necessary to provide an even-plane surface of uniform appearance.
4. Exterior Building Enclosure: Patch components in a manner that restores enclosure to a weathertight condition.

D. Cleaning: Clean areas and spaces where cutting and patching are performed. Completely remove paint, mortar, oils, putty, and similar materials.

END OF SECTION 017310

SECTION 017320 - SELECTIVE DEMOLITION

PART 1 - GENERAL

1.1 RELATED DOCUMENTS

A. Drawings and general provisions of the Contract, including General and Supplementary Conditions and other Division 01 Specification Sections, apply to this Section.

1.2 SUMMARY

A. This Section includes the following:

1. Demolition and removal of selected portions of building or structure.

B. Related Sections include the following:

1. Division 01 Section "Summary" for use of premises, and phasing, and Owner-occupancy requirements.
2. Division 01 Section "Temporary Facilities and Controls" for temporary construction and environmental-protection measures for selective demolition operations.
3. Division 01 Section "Cutting and Patching" for cutting and patching procedures.

1.3 DEFINITIONS

A. Remove: Detach items from existing construction and legally dispose of them off-site, unless indicated to be removed and salvaged or removed and reinstalled.

B. Remove and Salvage: Detach items from existing construction and deliver them to Owner ready for reuse.

C. Remove and Reinstall: Detach items from existing construction, prepare them for reuse, and reinstall them where indicated.

D. Existing to Remain: Existing items of construction that are not to be removed and that are not otherwise indicated to be removed, removed and salvaged, or removed and reinstalled.

1.4 SUBMITTALS

A. Qualification Data: For demolition firm and refrigerant recovery technician.

B. Schedule of Selective Demolition Activities: Indicate the following:

1. Detailed sequence of selective demolition and removal work, with starting and ending dates for each activity. Ensure Owner's building manager's on-site operations are uninterrupted.

2. Interruption of utility services. Indicate how long utility services will be interrupted.
3. Coordination for shutoff, capping, and continuation of utility services.
4. Locations of proposed dust- and noise-control temporary partitions and means of egress.
5. Coordination of Owner's continuing occupancy of portions of existing building and of Owner's partial occupancy of completed Work.
6. Means of protection for items to remain and items in path of waste removal from building.

C. Inventory: After selective demolition is complete, submit a list of items that have been removed and salvaged.

D. Predemolition Videotapes: Show existing conditions of adjoining construction and site improvements, including finish surfaces, that might be misconstrued as damage caused by selective demolition operations. Submit before Work begins.

E. Landfill Records: Indicate receipt and acceptance of hazardous wastes by a landfill facility licensed to accept hazardous wastes.

1.5 QUALITY ASSURANCE

A. Demolition Firm Qualifications: An experienced firm that has specialized in demolition work similar in material and extent to that indicated for this Project.

B. Regulatory Requirements: Comply with governing EPA notification regulations before beginning selective demolition. Comply with hauling and disposal regulations of authorities having jurisdiction.

C. Standards: Comply with ANSI A10.6 and NFPA 241.

D. Predemolition Conference: Conduct conference at Project site to comply with requirements in Division 01 Section "Project Management and Coordination."

E. Predemolition Conference: Conduct conference at Project site to comply with requirements in Division 01 Section "Project Management and Coordination." Review methods and procedures related to selective demolition including, but not limited to, the following:

1. Inspect and discuss condition of construction to be selectively demolished.
2. Review structural load limitations of existing structure.
3. Review and finalize selective demolition schedule and verify availability of materials, demolition personnel, equipment, and facilities needed to make progress and avoid delays.
4. Review requirements of work performed by other trades that rely on substrates exposed by selective demolition operations.
5. Review areas where existing construction is to remain and requires protection.

1.6 PROJECT CONDITIONS

A. Owner will occupy portions of building immediately adjacent to selective demolition area. Conduct selective demolition so Owner's operations will not be disrupted.

1. Comply with requirements specified in Division 01 Section "Summary."

B. Conditions existing at time of inspection for bidding purpose will be maintained by Owner as far as practical.

1. Before selective demolition, Owner will remove the following items:

C. Notify Engineer of discrepancies between existing conditions and Drawings before proceeding with selective demolition.

D. Hazardous Materials: It is not expected that hazardous materials will be encountered in the Work.
1. If materials suspected of containing hazardous materials are encountered, do not disturb; immediately notify Engineer and Owner. Owner will remove hazardous materials under a separate contract.

E. Storage or sale of removed items or materials on-site is not permitted.

F. Utility Service: Maintain existing utilities indicated to remain in service and protect them against damage during selective demolition operations.

1. Maintain fire-protection facilities in service during selective demolition operations.

1.7 WARRANTY

A. Existing Warranties: Remove, replace, patch, and repair materials and surfaces cut or damaged during selective demolition, by methods and with materials so as not to void existing warranties.

PART 2 - PRODUCTS (Not Used)

PART 3 - EXECUTION

3.1 EXAMINATION

A. Verify that utilities have been disconnected and capped.

B. Survey existing conditions and correlate with requirements indicated to determine extent of selective demolition required.

C. Inventory and record the condition of items to be removed and reinstalled and items to be removed and salvaged.

D. When unanticipated mechanical, electrical, or structural elements that conflict with intended function or design are encountered, investigate and measure the nature and extent of conflict. Promptly submit a written report to Engineer.

E. Engage a professional engineer to survey condition of building to determine whether removing any element might result in structural deficiency or unplanned collapse of any portion of structure or adjacent structures during selective demolition operations.

F. Survey of Existing Conditions: Record existing conditions by use of preconstruction videotapes.
   1. Before selective demolition or removal of existing building elements that will be reproduced or duplicated in final Work, make permanent record of measurements, materials, and construction details required to make exact reproduction.

G. Perform surveys as the Work progresses to detect hazards resulting from selective demolition activities.

3.2 UTILITY SERVICES AND MECHANICAL/ELECTRICAL SYSTEMS

A. Existing Services/Systems: Maintain services/systems indicated to remain and protect them against damage during selective demolition operations.

   1. Comply with requirements for existing services/systems interruptions specified in Division 01 Section "Summary."

B. Service/System Requirements: Locate, identify, disconnect, and seal or cap off indicated utility services and mechanical/electrical systems serving areas to be selectively demolished.

   1. Owner will arrange to shut off indicated services/systems when requested by Contractor.
   2. Arrange to shut off indicated utilities with utility companies.
   3. If services/systems are required to be removed, relocated, or abandoned, before proceeding with selective demolition provide temporary services/systems that bypass area of selective demolition and that maintain continuity of services/systems to other parts of building.
   4. Cut off pipe or conduit in walls or partitions to be removed. Cap, valve, or plug and seal remaining portion of pipe or conduit after bypassing.

3.3 PREPARATION

A. Site Access and Temporary Controls: Conduct selective demolition and debris-removal operations to ensure minimum interference with roads, streets, walks, walkways, and other adjacent occupied and used facilities.

   1. Comply with requirements for access and protection specified in Division 01 Section "Temporary Facilities and Controls."

B. Temporary Facilities: Provide temporary barricades and other protection required to prevent injury to people and damage to adjacent buildings and facilities to remain.

   1. Provide protection to ensure safe passage of people around selective demolition area and to and from occupied portions of building.

2. Provide temporary weather protection, during interval between selective demolition of existing construction on exterior surfaces and new construction, to prevent water leakage and damage to structure and interior areas.
3. Protect walls, ceilings, floors, and other existing finish work that are to remain or that are exposed during selective demolition operations.
4. Cover and protect furniture, furnishings, and equipment that have not been removed.
5. Comply with requirements for temporary enclosures, dust control, heating, and cooling specified in Division 01 Section "Temporary Facilities and Controls."

3.4 SELECTIVE DEMOLITION, GENERAL

A. General: Demolish and remove existing construction only to the extent required by new construction and as indicated. Use methods required to complete the Work within limitations of governing regulations and as follows:

1. Proceed with selective demolition systematically, from higher to lower level. Complete selective demolition operations above each floor or tier before disturbing supporting members on the next lower level.
2. Neatly cut openings and holes plumb, square, and true to dimensions required. Use cutting methods least likely to damage construction to remain or adjoining construction. Use hand tools or small power tools designed for sawing or grinding, not hammering and chopping, to minimize disturbance of adjacent surfaces. Temporarily cover openings to remain.
3. Cut or drill from the exposed or finished side into concealed surfaces to avoid marring existing finished surfaces.
4. Do not use cutting torches until work area is cleared of flammable materials. At concealed spaces, such as duct and pipe interiors, verify condition and contents of hidden space before starting flame-cutting operations. Maintain fire watch and portable fire-suppression devices during flame-cutting operations.
5. Maintain adequate ventilation when using cutting torches.
6. Remove decayed, vermin-infested, or otherwise dangerous or unsuitable materials and promptly dispose of off-site.
7. Remove structural framing members and lower to ground by method suitable to avoid free fall and to prevent ground impact or dust generation.
8. Locate selective demolition equipment and remove debris and materials so as not to impose excessive loads on supporting walls, floors, or framing.
9. Dispose of demolished items and materials promptly.

B. Removed Items:

1. Pack or crate items after cleaning. Identify contents of containers.

2. Store items in a secure area until delivery to Owner.
3. Transport items to Owner's storage area designated by Owner.
4. Protect items from damage during transport and storage.

C. Removed and Reinstalled Items:

1. Clean and repair items to functional condition adequate for intended reuse. Paint equipment to match new equipment.

2. Pack or crate items after cleaning and repairing. Identify contents of containers.
3. Protect items from damage during transport and storage.
4. Reinstall items in locations indicated. Comply with installation requirements for new materials and equipment. Provide connections, supports, and miscellaneous materials necessary to make item functional for use indicated.

D. Existing Items to Remain: Protect construction indicated to remain against damage and soiling during selective demolition. When permitted by Engineer, items may be removed to a suitable, protected storage location during selective demolition and cleaned and reinstalled in their original locations after selective demolition operations are complete.

3.5 SELECTIVE DEMOLITION PROCEDURES FOR SPECIFIC MATERIALS

A. Concrete: Demolish in small sections. Cut concrete to a depth of at least 3/4 inch (19 mm) at junctures with construction to remain, using power-driven saw. Dislodge concrete from reinforcement at perimeter of areas being demolished, cut reinforcement, and then remove remainder of concrete indicated for selective demolition. Neatly trim openings to dimensions indicated.

B. Concrete: Demolish in sections. Cut concrete full depth at junctures with construction to remain and at regular intervals, using power-driven saw, then remove concrete between saw cuts.

C. Masonry: Demolish in small sections. Cut masonry at junctures with construction to remain, using power-driven saw, then remove masonry between saw cuts.

D. Roofing: Remove no more existing roofing than can be covered in one day by new roofing and so that building interior remains watertight and weathertight.

1. Remove existing roof membrane, flashings, copings, and roof accessories.
2. Remove existing roofing system down to substrate.

3.6 DISPOSAL OF DEMOLISHED MATERIALS

A. General: Except for items or materials indicated to be reused, salvaged, reinstalled, or otherwise indicated to remain Owner's property, remove demolished materials from Project site and legally dispose of them in an EPA-approved landfill.

1. Do not allow demolished materials to accumulate on-site.
2. Remove and transport debris in a manner that will prevent spillage on adjacent surfaces and areas.
3. Remove debris from elevated portions of building by chute, hoist, or other device that will convey debris to grade level in a controlled descent.

B. Burning: Do not burn demolished materials.

C. Disposal: Transport demolished materials off Owner's property and legally dispose of them.

3.7 CLEANING

A. Clean adjacent structures and improvements of dust, dirt, and debris caused by selective demolition operations. Return adjacent areas to condition existing before selective demolition operations began.

END OF SECTION 017320

SECTION 017700 - CLOSEOUT PROCEDURES

PART 1 - GENERAL

1.1 RELATED DOCUMENTS

A. Drawings and general provisions of the Contract, including General and Supplementary Conditions and other Division 01 Specification Sections, apply to this Section.

1.2 SUMMARY

A. Section includes administrative and procedural requirements for contract closeout, including, but not limited to, the following:

1. Substantial Completion procedures.
2. Final completion procedures.
3. Warranties.
4. Final cleaning.

B. Related Sections:

1. Division 01 Section "Execution Requirements" for progress cleaning of Project site.
2. Division 01 Section "Project Record Documents" for submitting Record Drawings, Record Specifications, and Record Product Data.
3. Division 01 Section "Operation and Maintenance Data" for operation and maintenance manual requirements.
4. Division 01 Section "Demonstration and Training" for requirements for instructing Owner's personnel.
5. Divisions 02 through 28 Sections for specific closeout and special cleaning requirements for the Work in those Sections.

1.3 SUBSTANTIAL COMPLETION

A. Preliminary Procedures: Before requesting inspection for determining date of Substantial Completion, complete the following. List items below that are incomplete with request.

1. Prepare a list of items to be completed and corrected (punch list), the value of items on the list, and reasons why the Work is not complete.
2. Advise Owner of pending insurance changeover requirements.
3. Submit specific warranties, workmanship bonds, maintenance service agreements, final certifications, and similar documents.
4. Obtain and submit releases permitting Owner unrestricted use of the Work and access to services and utilities. Include occupancy permits, operating certificates, and similar releases.

5. Prepare and submit Project Record Documents, operation and maintenance manuals, final completion construction photographic documentation, damage or settlement surveys, property surveys, and similar final record information.
6. Deliver tools, spare parts, extra materials, and similar items to location designated by Owner. Label with manufacturer's name and model number where applicable.
7. Advise Owner's personnel of changeover in security provisions.
8. Complete startup testing of systems.
9. Submit test/adjust/balance records.
10. Terminate and remove temporary facilities from Project site, along with mockups, construction tools, and similar elements.
11. Advise Owner of changeover in heat and other utilities.
12. Submit changeover information related to Owner's occupancy, use, operation, and maintenance.
13. Complete final cleaning requirements, including touchup painting.
14. Touch up and otherwise repair and restore marred exposed finishes to eliminate visual defects.

B. Inspection: Submit a written request for inspection for Substantial Completion. On receipt of request, Engineer will either proceed with inspection or notify Contractor of unfulfilled requirements. Engineer will prepare the Certificate of Substantial Completion after inspection or will notify Contractor of items, either on Contractor's list or additional items identified by Engineer, that must be completed or corrected before certificate will be issued.

1. Reinspection: Request reinspection when the Work identified in previous inspections as incomplete is completed or corrected.
2. Results of completed inspection will form the basis of requirements for final completion.

1.4 FINAL COMPLETION

A. Preliminary Procedures: Before requesting final inspection for determining final completion, complete the following:

1. Submit a final Application for Payment according to Division 01 Section "Payment Procedures."
2. Submit certified copy of Engineer's Substantial Completion inspection list of items to be completed or corrected (punch list), endorsed and dated by Engineer. The certified copy of the list shall state that each item has been completed or otherwise resolved for acceptance.
3. Submit evidence of final, continuing insurance coverage complying with insurance requirements.
4. Instruct Owner's personnel in operation, adjustment, and maintenance of products, equipment, and systems. Submit demonstration and training video recordings.

B. Inspection: Submit a written request for final inspection for acceptance. On receipt of request, Engineer will either proceed with inspection or notify Contractor of unfulfilled requirements. Engineer will prepare a final Certificate for Payment after inspection or will notify Contractor of construction that must be completed or corrected before certificate will be issued.

1. Reinspection: Request reinspection when the Work identified in previous inspections as incomplete is completed or corrected.

1.5 LIST OF INCOMPLETE ITEMS (PUNCH LIST)

A. Organization of List: Include name and identification of each space and area affected by construction operations for incomplete items and items needing correction including, if necessary, areas disturbed by Contractor that are outside the limits of construction. Use CSI Form 14.1A.

1. Organize list of spaces in sequential order.
2. Organize items applying to each space by major element, including categories for ceiling, individual walls, floors, equipment, and building systems.
3. Include the following information at the top of each page:

    a. Project name.
    b. Date.
    c. Name of Engineer.
    d. Name of Contractor.
    e. Page number.

4. Submit list of incomplete items in the following format:

    a. PDF electronic file.

1.6 WARRANTIES

A. Submittal Time: Submit written warranties on request of Engineer for designated portions of the Work where commencement of warranties other than date of Substantial Completion is indicated.

B. Partial Occupancy: Submit properly executed warranties within seven (7) days of completion of designated portions of the Work that are completed and occupied or used by Owner during construction period by separate agreement with Contractor.

C. Organize warranty documents into an orderly sequence based on the table of contents of the Project Manual.

1. Bind warranties and bonds in heavy-duty, three-ring, vinyl-covered, loose-leaf binders, thickness as necessary to accommodate contents, and sized to receive 8-1/2-by-11-inch (215-by-280-mm) paper.
2. Provide heavy paper dividers with plastic-covered tabs for each separate warranty. Mark tab to identify the product or installation. Provide a typed description of the product or installation, including the name of the product and the name, address, and telephone number of Installer.
3. Identify each binder on the front and spine with the typed or printed title "WARRANTIES," Project name, and name of Contractor.
4. Scan warranties and bonds and assemble complete warranty and bond submittal package into a single indexed electronic PDF file with links enabling navigation to each item. Provide table of contents at beginning of document.

D. Provide additional copies of each warranty to include in operation and maintenance manuals.

PART 2 - PRODUCTS

2.1 MATERIALS

A. Cleaning Agents: Use cleaning materials and agents recommended by manufacturer or fabricator of the surface to be cleaned. Do not use cleaning agents that are potentially hazardous to health or property or that might damage finished surfaces.

1. Use cleaning products that meet Green Seal GS-37, or if GS-37 is not applicable, use products that comply with the California Code of Regulations maximum allowable VOC levels.

PART 3 - EXECUTION

3.1 FINAL CLEANING

A. General: Perform final cleaning. Conduct cleaning and waste-removal operations to comply with local laws and ordinances and Federal and local environmental and antipollution regulations.

B. Cleaning: Employ experienced workers or professional cleaners for final cleaning. Clean each surface or unit to condition expected in an average commercial building cleaning and maintenance program. Comply with manufacturer's written instructions.

1. Complete the following cleaning operations before requesting inspection for certification of Substantial Completion for entire Project or for a portion of Project:

a. Clean Project site, yard, and grounds, in areas disturbed by construction activities, including landscape development areas, of rubbish, waste material, litter, and other foreign substances.
b. Sweep paved areas broom clean. Remove petrochemical spills, stains, and other foreign deposits.
c. Remove tools, construction equipment, machinery, and surplus material from Project site.
d. Clean exposed exterior and interior hard-surfaced finishes to a dirt-free condition, free of stains, films, and similar foreign substances. Avoid disturbing natural weathering of exterior surfaces. Restore reflective surfaces to their original condition.
e. Remove debris and surface dust from limited access spaces, including roofs, plenums, shafts, trenches, equipment vaults, manholes, attics, and similar spaces.
f. Sweep concrete floors broom clean in unoccupied spaces.
g. Clean transparent materials, including mirrors and glass in doors and windows. Remove glazing compounds and other noticeable, vision-obscuring materials. Replace chipped or broken glass and other damaged transparent materials. Polish mirrors and glass, taking care not to scratch surfaces.
h. Remove labels that are not permanent.

i. Touch up and otherwise repair and restore marred, exposed finishes and surfaces. Replace finishes and surfaces that cannot be satisfactorily repaired or restored or that already show evidence of repair or restoration.

1) Do not paint over "UL" and other required labels and identification, including mechanical and electrical nameplates.

j. Wipe surfaces of mechanical and electrical equipment and similar equipment. Remove excess lubrication, paint and mortar droppings, and other foreign substances.

k. Replace parts subject to operating conditions during construction that may impede operation or reduce longevity.

l. Leave Project clean and ready for occupancy.

C. Construction Waste Disposal: Comply with waste disposal requirements in Division 01 Section "Temporary Facilities and Controls".

END OF SECTION 017700

Advancement of Construction Technology

PUNCH LIST

Project: _____

_____

To (Contractor): _____

_____

From (A/E): _____

Site Visit Date: _____

A/E Project Number: _____

Contract For: _____

The following items require the attention of the Contractor for completion or correction. This list may not be all-inclusive, and the failure to include any items on this list does not alter the responsibility of the Contractor to complete all Work in accordance with the Contract Documents.

Item Number	Room Number	Location (Area)	Description	Correction/Completion Date	Verification A/E Check

☐ Attachments

Signed by: Date:

Copies: ☐ Owner ☐ Consultants ☐ _____ ☐ _____ ☐ _____ ☐ _____ ☐ _____ ☐ _____ ☐ _____ ☐ File

Copyright 1996, Construction Specifications Institute,
601 Madison Street, Alexandria, VA 22314-1791

SECTION 017823 - OPERATION AND MAINTENANCE DATA

PART 1 - GENERAL

1.1 RELATED DOCUMENTS

A. Drawings and general provisions of the Contract, including General and Supplementary Conditions and other Division 01 Specification Sections, apply to this Section.

1.2 SUMMARY

A. Section includes administrative and procedural requirements for preparing operation and maintenance manuals, including the following:

1. Operation and maintenance documentation directory.
2. Emergency manuals.
3. Operation manuals for systems, subsystems, and equipment.
4. Product maintenance manuals.
5. Systems and equipment maintenance manuals.

B. Related Sections:
1. Division 01 Section "Submittal Procedures" for submitting copies of submittals for operation and maintenance manuals.
2. Division 01 Section "General Commissioning Requirements" for verification and compilation of data into operation and maintenance manuals.
3. Divisions 02 through 28 Sections for specific operation and maintenance manual requirements for the Work in those Sections.

1.3 DEFINITIONS

A. System: An organized collection of parts, equipment, or subsystems united by regular interaction.

B. Subsystem: A portion of a system with characteristics similar to a system.

1.4 CLOSEOUT SUBMITTALS

A. Manual Content: Operations and maintenance manual content is specified in individual specification sections to be reviewed at the time of Section submittals. Submit reviewed manual content formatted and organized as required by this Section.

1. Where applicable, clarify and update reviewed manual content to correspond to modifications and field conditions.

B. Format: Submit operations and maintenance manuals in the following format:

1. PDF electronic file. Assemble each manual into a composite electronically-indexed file. Submit on digital media acceptable to Engineer.

    a. Name each indexed document file in composite electronic index with applicable item name. Include a complete electronically-linked operation and maintenance directory.
    b. Enable inserted reviewer comments on draft submittals.

2. Six (6) paper copies. Include a complete operation and maintenance directory. Enclose title pages and directories in clear plastic sleeves. Engineer will return all six copies.

C. Initial Manual Submittal: Submit draft copy of each manual at least 30 days before commencing demonstration and training. Engineer will comment on whether general scope and content of manual are acceptable.

D. Final Manual Submittal: Submit each manual in final form prior to requesting inspection for Substantial Completion and at least 15 days before commencing demonstration and training. Engineer will return copy with comments.

1. Correct or modify each manual to comply with Engineer's comments. Submit copies of each corrected manual within 15 days of receipt of Engineer's comments and prior to commencing demonstration and training.

PART 2 - PRODUCTS

2.1 OPERATION AND MAINTENANCE DOCUMENTATION DIRECTORY

A. Organization: Include a section in the directory for each of the following:

1. List of documents.
2. List of systems.
3. List of equipment.
4. Table of contents.

B. List of Systems and Subsystems: List systems alphabetically. Include references to operation and maintenance manuals that contain information about each system.

C. List of Equipment: List equipment for each system, organized alphabetically by system. For pieces of equipment not part of system, list alphabetically in separate list.

D. Tables of Contents: Include a table of contents for each emergency, operation, and maintenance manual.

E. Identification: In the documentation directory and in each operation and maintenance manual, identify each system, subsystem, and piece of equipment with same designation used in the Contract Documents. If no designation exists, assign a designation according to ASHRAE Guideline 4, "Preparation of Operating and Maintenance Documentation for Building Systems."

2.2 REQUIREMENTS FOR EMERGENCY, OPERATION, AND MAINTENANCE MANUALS

A. Organization: Unless otherwise indicated, organize each manual into a separate section for each system and subsystem, and a separate section for each piece of equipment not part of a system. Each manual shall contain the following materials, in the order listed:

1. Title page.
2. Table of contents.
3. Manual contents.

B. Title Page: Include the following information:

1. Subject matter included in manual.
2. Name and address of Project.
3. Name and address of Owner.
4. Date of submittal.
5. Name and contact information for Contractor.
6. Name and contact information for Engineer.
7. Names and contact information for major consultants to the Engineer that designed the systems contained in the manuals.
8. Cross-reference to related systems in other operation and maintenance manuals.

C. Table of Contents: List each product included in manual, identified by product name, indexed to the content of the volume, and cross-referenced to Specification Section number in Project Manual.

1. If operation or maintenance documentation requires more than one volume to accommodate data, include comprehensive table of contents for all volumes in each volume of the set.

D. Manual Contents: Organize into sets of manageable size. Arrange contents alphabetically by system, subsystem, and equipment. If possible, assemble instructions for subsystems, equipment, and components of one system into a single binder.

E. Manuals, Paper Copy: Submit manuals in the form of hard copy, bound and labeled volumes.

1. Binders: Heavy-duty, three-ring, vinyl-covered, loose-leaf binders, in thickness necessary to accommodate contents, sized to hold 8-1/2-by-11-inch (215-by-280-mm) paper; with clear plastic sleeve on spine to hold label describing contents and with pockets inside covers to hold folded oversize sheets.

   a. If two or more binders are necessary to accommodate data of a system, organize data in each binder into groupings by subsystem and related components. Cross-reference other binders if necessary to provide essential information for proper operation or maintenance of equipment or system.
   b. Identify each binder on front and spine, with printed title "OPERATION AND MAINTENANCE MANUAL," Project title or name,and subject matter of contents. Indicate volume number for multiple-volume sets.

2. Dividers: Heavy-paper dividers with plastic-covered tabs for each section of the manual. Mark each tab to indicate contents. Include typed list of products and major components

of equipment included in the section on each divider, cross-referenced to Specification Section number and title of Project Manual.

3. Protective Plastic Sleeves: Transparent plastic sleeves designed to enclose diagnostic software storage media for computerized electronic equipment.
4. Supplementary Text: Prepared on 8-1/2-by-11-inch (215-by-280-mm) white bond paper.
5. Drawings: Attach reinforced, punched binder tabs on drawings and bind with text.

    a. If oversize drawings are necessary, fold drawings to same size as text pages and use as foldouts.
    b. If drawings are too large to be used as foldouts, fold and place drawings in labeled envelopes and bind envelopes in rear of manual. At appropriate locations in manual, insert typewritten pages indicating drawing titles, descriptions of contents, and drawing locations.

2.3 EMERGENCY MANUALS

A. Content: Organize manual into a separate section for each of the following:

1. Type of emergency.
2. Emergency instructions.
3. Emergency procedures.

B. Type of Emergency: Where applicable for each type of emergency indicated below, include instructions and procedures for each system, subsystem, piece of equipment, and component:

1. Fire.
2. Flood.
3. Water leak.
4. Power failure.
5. Water outage.
6. System, subsystem, or equipment failure.

C. Emergency Instructions: Describe and explain warnings, trouble indications, error messages, and similar codes and signals. Include responsibilities of Owner's operating personnel for notification of Installer, supplier, and manufacturer to maintain warranties.

D. Emergency Procedures: Include the following, as applicable:

1. Instructions on stopping.
2. Shutdown instructions for each type of emergency.
3. Operating instructions for conditions outside normal operating limits.
4. Required sequences for electric or electronic systems.
5. Special operating instructions and procedures.

2.4 OPERATION MANUALS

A. Content: In addition to requirements in this Section, include operation data required in individual Specification Sections and the following information:

1. System, subsystem, and equipment descriptions. Use designations for systems and equipment indicated on Contract Documents.
2. Performance and design criteria if Contractor is delegated design responsibility.
3. Operating standards.
4. Operating procedures.
5. Operating logs.
6. Wiring diagrams.
7. Control diagrams.
8. Piped system diagrams.
9. Precautions against improper use.
10. License requirements including inspection and renewal dates.

B. Descriptions: Include the following:

1. Product name and model number. Use designations for products indicated on Contract Documents.
2. Manufacturer's name.
3. Equipment identification with serial number of each component.
4. Equipment function.
5. Operating characteristics.
6. Limiting conditions.
7. Performance curves.
8. Engineering data and tests.
9. Complete nomenclature and number of replacement parts.

C. Operating Procedures: Include the following, as applicable:

1. Startup procedures.
2. Equipment or system break-in procedures.
3. Routine and normal operating instructions.
4. Regulation and control procedures.
5. Instructions on stopping.
6. Normal shutdown instructions.
7. Seasonal and weekend operating instructions.
8. Required sequences for electric or electronic systems.
9. Special operating instructions and procedures.

D. Systems and Equipment Controls: Describe the sequence of operation, and diagram controls as installed.

E. Piped Systems: Diagram piping as installed, and identify color-coding where required for identification.

2.5 PRODUCT MAINTENANCE MANUALS

A. Content: Organize manual into a separate section for each product, material, and finish. Include source information, product information, maintenance procedures, repair materials and sources, and warranties and bonds, as described below.

B. Source Information: List each product included in manual, identified by product name and arranged to match manual's table of contents. For each product, list name, address, and telephone number of Installer or supplier and maintenance service agent, and cross-reference Specification Section number and title in Project Manual and drawing or schedule designation or identifier where applicable.

C. Product Information: Include the following, as applicable:

1. Product name and model number.
2. Manufacturer's name.
3. Color, pattern, and texture.
4. Material and chemical composition.
5. Reordering information for specially manufactured products.

D. Maintenance Procedures: Include manufacturer's written recommendations and the following:

1. Inspection procedures.
2. Types of cleaning agents to be used and methods of cleaning.
3. List of cleaning agents and methods of cleaning detrimental to product.
4. Schedule for routine cleaning and maintenance.
5. Repair instructions.

E. Repair Materials and Sources: Include lists of materials and local sources of materials and related services.

F. Warranties and Bonds: Include copies of warranties and bonds and lists of circumstances and conditions that would affect validity of warranties or bonds.

1. Include procedures to follow and required notifications for warranty claims.

2.6 SYSTEMS AND EQUIPMENT MAINTENANCE MANUALS

A. Content: For each system, subsystem, and piece of equipment not part of a system, include source information, manufacturers' maintenance documentation, maintenance procedures, maintenance and service schedules, spare parts list and source information, maintenance service contracts, and warranty and bond information, as described below.

B. Source Information: List each system, subsystem, and piece of equipment included in manual, identified by product name and arranged to match manual's table of contents. For each product, list name, address, and telephone number of Installer or supplier and maintenance service agent, and cross-reference Specification Section number and title in Project Manual and drawing or schedule designation or identifier where applicable.

C. Manufacturers' Maintenance Documentation: Manufacturers' maintenance documentation including the following information for each component part or piece of equipment:

1. Standard maintenance instructions and bulletins.
2. Drawings, diagrams, and instructions required for maintenance, including disassembly and component removal, replacement, and assembly.
3. Identification and nomenclature of parts and components.

4. List of items recommended to be stocked as spare parts.

D. Maintenance Procedures: Include the following information and items that detail essential maintenance procedures:

1. Test and inspection instructions.
2. Troubleshooting guide.
3. Precautions against improper maintenance.
4. Disassembly; component removal, repair, and replacement; and reassembly instructions.
5. Aligning, adjusting, and checking instructions.
6. Demonstration and training video recording, if available.

E. Maintenance and Service Schedules: Include service and lubrication requirements, list of required lubricants for equipment, and separate schedules for preventive and routine maintenance and service with standard time allotment.

1. Scheduled Maintenance and Service: Tabulate actions for daily, weekly, monthly, quarterly, semiannual, and annual frequencies.
2. Maintenance and Service Record: Include manufacturers' forms for recording maintenance.

F. Spare Parts List and Source Information: Include lists of replacement and repair parts, with parts identified and cross-referenced to manufacturers' maintenance documentation and local sources of maintenance materials and related services.

G. Maintenance Service Contracts: Include copies of maintenance agreements with name and telephone number of service agent.

H. Warranties and Bonds: Include copies of warranties and bonds and lists of circumstances and conditions that would affect validity of warranties or bonds.

1. Include procedures to follow and required notifications for warranty claims.

PART 3 - EXECUTION

3.1 MANUAL PREPARATION

A. Operation and Maintenance Documentation Directory: Prepare a separate manual that provides an organized reference to emergency, operation, and maintenance manuals.

B. Emergency Manual: Assemble a complete set of emergency information indicating procedures for use by emergency personnel and by Owner's operating personnel for types of emergencies indicated.

C. Product Maintenance Manual: Assemble a complete set of maintenance data indicating care and maintenance of each product, material, and finish incorporated into the Work.

D. Operation and Maintenance Manuals: Assemble a complete set of operation and maintenance data indicating operation and maintenance of each system, subsystem, and piece of equipment not part of a system.

1. Engage a factory-authorized service representative to assemble and prepare information for each system, subsystem, and piece of equipment not part of a system.
2. Prepare a separate manual for each system and subsystem, in the form of an instructional manual for use by Owner's operating personnel.

E. Manufacturers' Data: Where manuals contain manufacturers' standard printed data, include only sheets pertinent to product or component installed. Mark each sheet to identify each product or component incorporated into the Work. If data include more than one item in a tabular format, identify each item using appropriate references from the Contract Documents. Identify data applicable to the Work and delete references to information not applicable.

1. Prepare supplementary text if manufacturers' standard printed data are not available and where the information is necessary for proper operation and maintenance of equipment or systems.

F. Drawings: Prepare drawings supplementing manufacturers' printed data to illustrate the relationship of component parts of equipment and systems and to illustrate control sequence and flow diagrams. Coordinate these drawings with information contained in record Drawings to ensure correct illustration of completed installation.

1. Do not use original project record documents as part of operation and maintenance manuals.
2. Comply with requirements of newly prepared record Drawings in Division 01 Section "Project Record Documents."

G. Comply with Division 01 Section "Closeout Procedures" for schedule for submitting operation and maintenance documentation.

END OF SECTION 017823

SECTION 017839 - PROJECT RECORD DOCUMENTS

PART 1 - GENERAL

1.1 RELATED DOCUMENTS

A. Drawings and general provisions of the Contract, including General and Supplementary Conditions and other Division 01 Specification Sections, apply to this Section.

1.2 SUMMARY

A. Section includes administrative and procedural requirements for project record documents, including the following:

1. Record Drawings.
2. Record Specifications.
3. Record Product Data.
4. Miscellaneous record submittals.

B. Related Sections:

1. Division 01 Section "Execution Requirements" for final property survey.
2. Division 01 Section "Closeout Procedures" for general closeout procedures.
3. Division 01 Section "Operation and Maintenance Data" for operation and maintenance manual requirements.
4. Divisions 02 through 28 Sections for specific requirements for project record documents of the Work in those Sections.

1.3 CLOSEOUT SUBMITTALS

A. Record Drawings: Comply with the following:

1. Number of Copies: Submit one set(s) of marked-up record prints.

B. Record Specifications: Submit one paper copy of Project's Specifications, including addenda and contract modifications.

C. Record Product Data: Submit one paper copy of each submittal.

1. Where record Product Data are required as part of operation and maintenance manuals, submit duplicate marked-up Product Data as a component of manual.

D. Miscellaneous Record Submittals: Refer to other Specification Sections for miscellaneous record-keeping requirements and submittals in connection with various construction activities. Submit one paper copy of each submittal.

E. Reports: Submit written report weekly indicating items incorporated in Project record documents concurrent with progress of the Work, including modifications, concealed conditions, field changes, product selections, and other notations incorporated.

PART 2 - PRODUCTS

2.1 RECORD DRAWINGS

A. Record Prints: Maintain one set of marked-up paper copies of the Contract Drawings and Shop Drawings.

1. Preparation: Mark record prints to show the actual installation where installation varies from that shown originally. Require individual or entity who obtained record data, whether individual or entity is Installer, subcontractor, or similar entity, to provide information for preparation of corresponding marked-up record prints.

    a. Give particular attention to information on concealed elements that would be difficult to identify or measure and record later.
    b. Accurately record information in an acceptable drawing technique.
    c. Record data as soon as possible after obtaining it.
    d. Record and check the markup before enclosing concealed installations.
    e. Cross-reference record prints to corresponding archive photographic documentation.

2. Content: Types of items requiring marking include, but are not limited to, the following:

    a. Dimensional changes to Drawings.
    b. Revisions to details shown on Drawings.
    c. Revisions to routing of piping and conduits.
    d. Revisions to electrical circuitry.
    e. Actual equipment locations.
    f. Duct size and routing.
    g. Locations of concealed internal utilities.
    h. Changes made by Change Order or Construction Change Directive.
    i. Changes made following Engineer's written orders.
    j. Details not on the original Contract Drawings.
    k. Field records for variable and concealed conditions.
    l. Record information on the Work that is shown only schematically.

3. Mark the Contract Drawings and Shop Drawings completely and accurately. Utilize personnel proficient at recording graphic information in production of marked-up record prints.
4. Mark record sets with erasable, red-colored pencil. Use other colors to distinguish between changes for different categories of the Work at same location.
5. Mark important additional information that was either shown schematically or omitted from original Drawings.
6. Note Construction Change Directive numbers, alternate numbers, Change Order numbers, and similar identification, where applicable.

B. Newly Prepared Record Drawings: Prepare new Drawings instead of preparing record Drawings where Engineer determines that neither the original Contract Drawings nor Shop Drawings are suitable to show actual installation.

1. New Drawings may be required when a Change Order is issued as a result of accepting an alternate, substitution, or other modification.
2. Consult Engineer for proper scale and scope of detailing and notations required to record the actual physical installation and its relation to other construction. Integrate newly prepared record Drawings into record Drawing sets; comply with procedures for formatting, organizing, copying, binding, and submitting.

C. Format: Identify and date each record Drawing; include the designation "PROJECT RECORD DRAWING" in a prominent location.

1. Record Prints: Organize record prints and newly prepared record Drawings into manageable sets. Bind each set with durable paper cover sheets. Include identification on cover sheets.
2. Format: Annotated PDF electronic file.
3. Record Digital Data Files: Organize digital data information into separate electronic files that correspond to each sheet of the Contract Drawings. Name each file with the sheet identification. Include identification in each digital data file.
4. Identification: As follows:

    a. Project name.
    b. Date.
    c. Designation "PROJECT RECORD DRAWINGS."
    d. Name of Engineer.
    e. Name of Contractor.

2.2 RECORD SPECIFICATIONS

A. Preparation: Mark Specifications to indicate the actual product installation where installation varies from that indicated in Specifications, addenda, and contract modifications.

1. Give particular attention to information on concealed products and installations that cannot be readily identified and recorded later.
2. Mark copy with the proprietary name and model number of products, materials, and equipment furnished, including substitutions and product options selected.
3. Record the name of manufacturer, supplier, Installer, and other information necessary to provide a record of selections made.
4. For each principal product, indicate whether record Product Data has been submitted in operation and maintenance manuals instead of submitted as record Product Data.
5. Note related Change Orders, record Product Data, and record Drawings where applicable.

B. Format: Submit record Specifications as paper copy.

2.3 RECORD PRODUCT DATA

A. Preparation: Mark Product Data to indicate the actual product installation where installation varies substantially from that indicated in Product Data submittal.

1. Give particular attention to information on concealed products and installations that cannot be readily identified and recorded later.
2. Include significant changes in the product delivered to Project site and changes in manufacturer's written instructions for installation.
3. Note related Change Orders, record Specifications, and record Drawings where applicable.

B. Format: Submit record Product Data as paper copy.

1. Include record Product Data directory organized by specification section number and title, electronically linked to each item of record Product Data.

2.4 MISCELLANEOUS RECORD SUBMITTALS

A. Assemble miscellaneous records required by other Specification Sections for miscellaneous record keeping and submittal in connection with actual performance of the Work. Bind or file miscellaneous records and identify each, ready for continued use and reference.

B. Format: Submit miscellaneous record submittals as paper copy.

1. Include miscellaneous record submittals directory organized by specification section number and title, electronically linked to each item of miscellaneous record submittals.

PART 3 - EXECUTION

3.1 RECORDING AND MAINTENANCE

A. Recording: Maintain one copy of each submittal during the construction period for project record document purposes. Post changes and modifications to project record documents as they occur; do not wait until the end of Project.

B. Maintenance of Record Documents and Samples: Store record documents and Samples in the field office apart from the Contract Documents used for construction. Do not use project record documents for construction purposes. Maintain record documents in good order and in a clean, dry, legible condition, protected from deterioration and loss. Provide access to project record documents for Engineer's reference during normal working hours.

END OF SECTION 017839

SECTION 017900 - DEMONSTRATION AND TRAINING

PART 1 - GENERAL

1.1 RELATED DOCUMENTS

A. Drawings and general provisions of the Contract, including General and Supplementary Conditions and other Division 01 Specification Sections, apply to this Section.

1.2 SUMMARY

A. Section includes administrative and procedural requirements for instructing Owner's personnel, including the following:

1. Demonstration of operation of systems, subsystems, and equipment.
2. Training in operation and maintenance of systems, subsystems, and equipment.
3. Demonstration and training video recordings.

B. Related Sections:

1. Divisions 02 through 28 Sections for specific requirements for demonstration and training for products in those Sections.

1.3 INFORMATIONAL SUBMITTALS

A. Attendance Record: For each training module, submit list of participants and length of instruction time.

B. Evaluations: For each participant and for each training module, submit results and documentation of performance-based test.

1.4 CLOSEOUT SUBMITTALS

A. Transcript: Prepared on 8-1/2-by-11-inch (215-by-280-mm) paper, punched and bound in heavy-duty, three-ring, vinyl-covered binders. Mark appropriate identification on front and spine of each binder. Include a cover sheet with same label information as the corresponding video recording. Include name of Project and date of video recording on each page.

B. At completion of training, submit complete training manual(s) for Owner's use.

1.5 QUALITY ASSURANCE

A. Instructor Qualifications: A factory-authorized service representative, complying with requirements in Division 01 Section "Quality Requirements," experienced in operation and maintenance procedures and training.

B. Preinstruction Conference: Conduct conference at Project site to comply with requirements in Division 01 Section "Project Management and Coordination." Review methods and procedures related to demonstration and training including, but not limited to, the following:

1. Inspect and discuss locations and other facilities required for instruction.
2. Review and finalize instruction schedule and verify availability of educational materials, instructors' personnel, audiovisual equipment, and facilities needed to avoid delays.
3. Review required content of instruction.
4. For instruction that must occur outside, review weather and forecasted weather conditions and procedures to follow if conditions are unfavorable.

1.6 COORDINATION

A. Coordinate instruction schedule with Owner's operations. Adjust schedule as required to minimize disrupting Owner's operations.

B. Coordinate instructors, including providing notification of dates, times, length of instruction time, and course content.

C. Coordinate content of training modules with content of approved emergency, operation, and maintenance manuals. Do not submit instruction program until operation and maintenance data has been reviewed and approved by Engineer.

PART 2 - PRODUCTS

2.1 INSTRUCTION PROGRAM

A. Program Structure: Develop an instruction program that includes individual training modules for each system and for equipment not part of a system, as required by individual Specification Sections.

B. Training Modules: Develop a learning objective and teaching outline for each module. Include a description of specific skills and knowledge that participant is expected to master. For each module, include instruction for the following as applicable to the system, equipment, or component:

1. Basis of System Design, Operational Requirements, and Criteria: Include the following:

   a. System, subsystem, and equipment descriptions.
   b. Performance and design criteria if Contractor is delegated design responsibility.
   c. Operating standards.
   d. Regulatory requirements.
   e. Equipment function.
   f. Operating characteristics.
   g. Limiting conditions.
   h. Performance curves.

2. Documentation: Review the following items in detail:

a. Operations manuals.
b. Maintenance manuals.
c. Project record documents.
d. Identification systems.
e. Warranties and bonds.
f. Maintenance service agreements and similar continuing commitments.

3. Emergencies: Include the following, as applicable:

a. Instructions on meaning of warnings, trouble indications, and error messages.
b. Instructions on stopping.
c. Shutdown instructions for each type of emergency.
d. Operating instructions for conditions outside of normal operating limits.
e. Sequences for electric or electronic systems.
f. Special operating instructions and procedures.

4. Operations: Include the following, as applicable:

a. Startup procedures.
b. Equipment or system break-in procedures.
c. Routine and normal operating instructions.
d. Regulation and control procedures.
e. Control sequences.
f. Safety procedures.
g. Instructions on stopping.
h. Normal shutdown instructions.
i. Operating procedures for emergencies.
j. Operating procedures for system, subsystem, or equipment failure.
k. Seasonal and weekend operating instructions.
l. Required sequences for electric or electronic systems.
m. Special operating instructions and procedures.

5. Adjustments: Include the following:

a. Alignments.
b. Checking adjustments.
c. Noise and vibration adjustments.
d. Economy and efficiency adjustments.

6. Troubleshooting: Include the following:

a. Diagnostic instructions.
b. Test and inspection procedures.

7. Maintenance: Include the following:

a. Inspection procedures.
b. Types of cleaning agents to be used and methods of cleaning.
c. List of cleaning agents and methods of cleaning detrimental to product.
d. Procedures for routine cleaning
e. Procedures for preventive maintenance.

f. Procedures for routine maintenance.
g. Instruction on use of special tools.

8. Repairs: Include the following:

a. Diagnosis instructions.
b. Repair instructions.
c. Disassembly; component removal, repair, and replacement; and reassembly instructions.
d. Instructions for identifying parts and components.
e. Review of spare parts needed for operation and maintenance.

PART 3 - EXECUTION

3.1 PREPARATION

A. Assemble educational materials necessary for instruction, including documentation and training module. Assemble training modules into a training manual organized in coordination with requirements in Division 01 Section "Operations and Maintenance Data."

B. Set up instructional equipment at instruction location.

3.2 INSTRUCTION

A. Engage qualified instructors to instruct Owner's personnel to adjust, operate, and maintain systems, subsystems, and equipment not part of a system.

1. Engineer will furnish an instructor to describe basis of system design, operational requirements, criteria, and regulatory requirements.
2. Owner will furnish an instructor to describe Owner's operational philosophy.
3. Owner will furnish Contractor with names and positions of participants.

B. Scheduling: Provide instruction at mutually agreed on times. For equipment that requires seasonal operation, provide similar instruction at start of each season.

1. Schedule training with Owner, through Engineer, with at least seven days' advance notice.

C. Cleanup: Collect used and leftover educational materials and give to Owner. Remove instructional equipment. Restore systems and equipment to condition existing before initial training use.

END OF SECTION 017900

DIVISION 01
SECTION 019113
GENERAL COMMISSIONING REQUIREMENTS
TABLE OF CONTENTS

PART 1. GENERAL

1.1. RELATED DOCUMENTS
1.2. SUMMARY
1.3. DEFINITIONS
1.4. COMMISSIONING TEAM
1.5. OWNER'S RESPONSIBILITIES
1.6. CONTRACTOR'S RESPONSIBILITIES
1.7. CxA'S RESPONSIBILITIES
1.8. COMMISSIONING DOCUMENTATION
1.9. SUBMITTALS
1.10. QUALITY ASSURANCE
1.11. COORDINATION
1.12. ALTERNATES

PART 2. PRODUCTS – NOT USED

PART 3. EXECUTION

3.1. OPERATION AND MAINTENANCE TRAINING REQUIREMENTS

SECTION 019113 - GENERAL COMMISSIONING REQUIREMENTS

PART 1 - GENERAL

1.1 RELATED DOCUMENTS

A. Drawings and general provisions of the Contract, including General and Supplementary Conditions and other Division 01 Specification Sections, apply to this Section.

1.2 SUMMARY

A. This Section includes general requirements that apply to implementation of commissioning without regard to systems, subsystems, and equipment being commissioned.

B. Related Sections include the following:

1. Division 01 Section *"HVAC Commissioning Requirements"* for specific requirements for commissioning HVAC systems.

2. Division 01 Section *"Contract Closeout"* for specific requirements for closeout at substantial and final completion.

3. Division 01 Section *"Contract Closeout"* for Specific Requirements for training and demonstration of systems to Owner.

4. Division 01 Section *"Contract Closeout"* for Specific Requirements related to the Preparation of systems operation and maintenance manuals.

1.3 DEFINITIONS

A. CxA: Commissioning Authority.

B. OPR: Owner's Project Requirements.

C. Systems, Subsystems, and Equipment: Where these terms are used together or separately, they shall mean "as-built" systems, subsystems, and equipment.

D. TAB: Testing, Adjusting, and Balancing.

1.4 COMMISSIONING TEAM

A. Members Appointed by Contractor(s): Individuals, each having authority to act on behalf of the entity he or she represents, explicitly organized to implement the commissioning process through coordinated actions. The commissioning team shall consist of, but not be limited to, representatives of Contractor, including Project superintendent and subcontractors, installers, suppliers, and specialists deemed appropriate by the CxA.

B. Members Appointed by Owner:

1. CxA: The designated person, company, or entity that plans, schedules, and coordinates the commissioning team to implement the commissioning process. Owner will engage the CxA under a separate contract. The CxA for this project shall be performed by KLH Eastern Shore, 4319 Dolby Farm Road, Box 205, Hurlock, Maryland 21643, (410) 924-9688 telephone, (410) 924-2018– cell.
2. All contractor commissioning requirements and costs associated with commissioning the project shall be included in the base bid.
3. Representatives of the facility user and operation and maintenance personnel.
4. Engineering design professionals.

1.5 OWNER'S RESPONSIBILITIES

A. Assign operation and maintenance personnel and schedule them to participate in commissioning team activities including, but not limited to, the following:

1. Coordination meetings.
2. Training in operation and maintenance of systems, subsystems, and equipment.
3. Testing meetings.
4. Demonstration of operation of systems, subsystems, and equipment.

1.6 CONTRACTOR'S RESPONSIBILITIES

A. Provide utility services required for the commissioning process.

B. Contractor shall assign representatives with expertise and authority to act on behalf of the Contractor and schedule them to participate in and perform commissioning team activities including, but not limited to, the following:

1. Participate in commissioning and construction-phase coordination meetings.
2. Participate in maintenance orientation and inspection.
3. Participate in operation and maintenance training sessions.
4. Participate in final review at acceptance meeting.
5. Certify that Work is complete and systems are operational according to the Contract Documents, including calibration of instrumentation and controls.
6. Evaluate performance deficiencies identified in test reports and, in collaboration with entity responsible for system and equipment installation, recommend corrective action.
7. Review and approve final commissioning documentation.
8. Certify that all pre-test work is complete and operational prior to scheduling performed testing by CxA.
9. During functional performance testing, a representative from the mechanical contractor, controls contractor, and test/balance engineer must be present and participate in testing.

C. Subcontractors shall assign representatives with expertise and authority to act on behalf of subcontractors and schedule them to participate in and perform commissioning team activities including, but not limited to, the following:

1. Pre-test all systems/equipment prior to engaging CxA for Functional Performance Testing.

2. Participate in commissioning and construction-phase coordination meetings.
3. Participate in maintenance orientation and inspection.
4. Participate in procedures meeting for testing.
5. Participate in final review at acceptance meeting.
6. Provide schedule for operation and maintenance data submittals, equipment startup, and testing to CxA for incorporation into the commissioning plan. Update schedule on a weekly basis throughout the construction period.
7. Provide information to the CxA for developing construction-phase commissioning plan.
8. Participate in training sessions for Owner's operation and maintenance personnel.
9. Provide updated Project Record Documents to the CxA on a daily basis.
10. Gather and submit operation and maintenance data for systems, subsystems, and equipment to the CxA, as specified in Division 01 Section "Operation and Maintenance Data."
11. Provide technicians who are familiar with the construction and operation of installed systems and who shall develop specific test procedures and participate in testing of installed systems, subsystems, and equipment.
12. The test/balance subcontractor, mechanical contractor, and automatic temperature controls subcontractor must be on-site and provide assistance during all functional performance testing.

1.7 CxA'S RESPONSIBILITIES

A. Organize and lead the commissioning team.

B. Prepare a construction-phase commissioning plan. Collaborate with Contractor and with subcontractors to develop test and inspection procedures. Include design changes and scheduled commissioning activities coordinated with overall Project schedule. Identify commissioning team member responsibilities, by name, firm, and trade specialty, for performance of each commissioning task.

C. Convene commissioning team meetings for the purpose of coordination, communication, and conflict resolution; discuss progress of the commissioning processes. Responsibilities include arranging for facilities, preparing agenda and attendance lists, and notifying participants. The CxA shall prepare and distribute minutes to commissioning team members and attendees within five workdays of the commissioning meeting.

D. At a mutually agreed upon time, conduct an initial construction-phase coordination meeting for the purpose of reviewing the commissioning activities and establishing tentative schedules for operation and maintenance submittals; operation and maintenance training sessions; TAB Work; and Project completion.

E. Observe and inspect construction and report progress and deficiencies. In addition to compliance with the Contract Documents, inspect systems and equipment installation for adequate accessibility for maintenance and component replacement or repair.

F. Prepare Project-specific test and inspection procedures and checklists.

G. Schedule, direct, witness, and document tests, inspections, and systems startup.

H. Compile test data, inspection reports, and certificates and include them in the systems manual and commissioning report.

I. Certify date of acceptance and startup for each item of equipment for start of warranty periods.

J. Review Project Record Documents for accuracy. Request revisions from Contractor to achieve accuracy. Project Record Documents requirements are specified in Division 01 Section "Project Record Documents."

K. Review and comment on operation and maintenance documentation and systems manual outline for compliance with the Contract Documents. Operation and maintenance documentation requirements are specified in Division 01 Section "Operation and Maintenance Data."

L. Assemble the final commissioning documentation, including the commissioning report and Project Record Documents.

1.8 COMMISSIONING DOCUMENTATION

A. Commissioning Plan: A document, prepared by CxA, that outlines the schedule, allocation of resources, and documentation requirements of the commissioning process, and shall include, but is not limited to the following:

1. Plan for delivery and review of submittals, systems manuals, and other documents and reports. Identification of the relationship of these documents to other functions and a detailed description of submittals that are required to support the commissioning processes. Submittal dates shall include the latest date approved submittals must be received without adversely affecting commissioning plan.
2. Description of the organization, layout, and content of commissioning documentation (including systems manual) and a detailed description of documents to be provided along with identification of responsible parties.
3. Identification of systems and equipment to be commissioned.
4. Description of schedules for testing procedures along with identification of parties involved in performing and verifying tests.
5. Identification of items that must be completed before the next operation can proceed.
6. Description of responsibilities of commissioning team members.
7. Description of observations to be made.
8. Description of requirements for operation and maintenance training, including required training materials.
9. Description of expected performance for systems, subsystems, equipment, and controls.
10. Schedule for commissioning activities with specific dates coordinated with overall construction schedule.
11. Identification of installed systems, subsystems, and equipment, including design changes that occurred during the construction phase.
12. Process and schedule for documenting changes on a continuous basis to appear in Project Record Documents.
13. Process and schedule for completing prestart and startup checklists for systems, subsystems, and equipment to be verified and tested.
14. Step-by-step procedures for testing systems, subsystems, and equipment with descriptions for methods of verifying relevant data, recording the results obtained, and listing parties involved in performing and verifying tests.

B. Test Checklists: CxA, with assistance of Contractor and Subcontractors, shall develop test checklists for each system, subsystem, or equipment including interfaces and interlocks, and include a separate entry, with space for comments, for each item to be tested. Prepare separate checklists for each mode of operation and provide space to indicate whether the mode under test responded as required. Provide space for testing personnel to sign off on each checklist. Specific checklist content requirements are specified in Division 01 Section *"HVAC Commissioning Requirements"*. Test checklists will be jointly developed as the project progresses. Each checklist, regardless of system, subsystem, or equipment being tested, shall include, but not be limited to, the following:

1. Name and identification code of tested item.
2. Test number.
3. Time and date of test.
4. Indication of whether the record is for a first test or retest following correction of a problem or issue.
5. Dated signatures of the person performing test and of the witness, if applicable.
6. Individuals present for test.
7. Deficiencies.
8. Issue number, if any, generated as the result of test.

C. Certificate of Readiness: Certificate of Readiness shall be signed by Contractor, Subcontractor(s), Installer(s), and CxA certifying that systems, subsystems, equipment, and associated controls are ready for testing. Completed test checklists signed by the responsible parties shall accompany this certificate.

D. Test and Inspection Reports: CxA shall record test data, observations, and measurements on test checklists. Photographs, forms, and other means appropriate for the application shall be included with data. CxA shall compile test and inspection reports and test and inspection certificates and include them in systems manual and commissioning report.

E. Corrective Action Documents: CxA shall document corrective action taken for systems and equipment that fail tests. Include required modifications to systems and equipment and revisions to test procedures, if any. Retest systems and equipment requiring corrective action and document retest results.

F. Issues Log: CxA shall prepare and maintain an issues log that describes design, installation, and performance issues that are at variance with the Contract Documents. Identify and track issues as they are encountered, documenting the status of unresolved and resolved issues.

1. Creating an Issues Log Entry:

   a. Identify the issue with unique numeric or alphanumeric identifier by which the issue may be tracked.
   b. Assign a descriptive title of the issue.
   c. Identify date and time of the issue.
   d. Identify test number of test being performed at the time of the observation, if applicable, for cross-reference.
   e. Identify system, subsystem, and equipment to which the issue applies.
   f. Identify location of system, subsystem, and equipment.
   g. Include information that may be helpful in diagnosing or evaluating the issue.
   h. Note recommended corrective action.

i. Identify commissioning team member responsible for corrective action.
j. Identify expected date of correction.
k. Identify person documenting the issue.

2. Documenting Issue Resolution:

a. Log date correction is completed or the issue is resolved.
b. Describe corrective action or resolution taken. Include description of diagnostic steps taken to determine root cause of the issue, if any.
c. Identify changes to the Contract Documents that may require action.
d. State that correction was completed and system, subsystem, and equipment is ready for retest, if applicable.
e. Identify person(s) who corrected or resolved the issue.
f. Identify person(s) documenting the issue resolution.

3. Issues Log Report: On a periodic basis, but not less than for each commissioning team meeting, CxA shall prepare a written narrative for review of outstanding issues and a status update of the issues log. As a minimum, CxA shall include the following information in the issues log and expand it in the narrative:

a. Issue number and title.
b. Date of the identification of the issue.
c. Name of the commissioning team member assigned responsibility for resolution.
d. Expected date of correction.

G. Commissioning Report: CxA shall document results of the commissioning process including unresolved issues and performance of systems, subsystems, and equipment. The commissioning report shall indicate whether systems, subsystems, and equipment have been completed and are performing according to the Contract Documents. The commissioning report shall include, but is not limited to, the following:

1. Lists and explanations of substitutions; compromises; variances in the Contract Documents; record of conditions; and, if appropriate, recommendations for resolution. This report shall be used to evaluate systems, subsystems, and equipment and shall serve as a future reference document during Owner occupancy and operation. It shall describe components and performance that exceed requirements of the Contract Documents and those that do not meet requirements of the Contract Documents. It may also include a recommendation for accepting or rejecting systems, subsystems, and equipment.
2. Commissioning plan.
3. Testing plans and reports.
4. Corrective modification documentation.
5. Issues log.
6. Completed test checklists.
7. Listing of off-season test(s) not performed and a schedule for their completion.
8. All commissioning documents must be submitted to the building Owner within 90 days of the date of receipt of the Certificate of Occupancy.

H. Systems Manual: CxA shall gather required information and compile systems manual. Systems manual shall include, but is not limited to, the following:
1. Project Record Documents as specified in Division 01 Section "Project Record Documents."

2. Final commissioning plan.
3. Commissioning report.
4. Operation and maintenance data as specified in Division 01 Section "Operation and Maintenance Data."

1.9 SUBMITTALS

A. Test Checklists and Report Forms: CxA shall submit sample checklists and forms to Contractor quality-control manager and subcontractors for review and comment. Submit two copies of each checklist and report form.

B. Test and Inspection Reports: CxA shall submit test and inspection reports.

C. Corrective Action Documents: CxA shall submit corrective action documents.

1.10 QUALITY ASSURANCE

A. Instructor Qualifications: Factory-authorized service representatives, experienced in training, operation, and maintenance procedures for installed systems, subsystems, and equipment.

B. Test Equipment Calibration: Comply with test equipment manufacturer's calibration procedures and intervals. Recalibrate test instruments immediately whenever instruments have been repaired following damage or dropping. Affix calibration tags to test instruments. Instruments shall have been calibrated within six months prior to use.

1.11 COORDINATION

A. Coordinating Meetings: CxA shall conduct coordination meetings of the commissioning team to review progress on the commissioning plan, to discuss scheduling conflicts, and to discuss upcoming commissioning process activities.

B. Pretesting Meetings: CxA shall conduct pretest meetings of the commissioning team to review startup reports, pretest inspection results, testing procedures, testing personnel and instrumentation requirements, and manufacturers' authorized service representative services for each system, subsystem, equipment, and component to be tested.

C. Testing Coordination: CxA shall coordinate sequence of testing activities to accommodate required quality-assurance and -control services with a minimum of delay and to avoid necessity of removing and replacing construction to accommodate testing and inspecting.

1. Schedule times for tests, inspections, obtaining samples, and similar activities.

D. Manufacturers' Field Services: CxA and Contractor shall coordinate services of manufacturers' field services.

1.12 ALTERNATES

A. Refer to Division 01 Section, “Alternates” for description of work under this section affected by alternates.

PART 2 - PRODUCTS (Not Used)

PART 3 - EXECUTION

3.1 OPERATION AND MAINTENANCE TRAINING REQUIREMENTS

A. Training Preparation Conference: Before operation and maintenance training, CxA shall convene a training preparation conference to include Owner's operation and maintenance personnel, Contractor, and subcontractors. In addition to requirements specified in Division 01 Section "Demonstration and Training," perform the following:

1. Review installed systems, subsystems, and equipment.
2. Review instructor qualifications.
3. Review instructional methods and procedures.
4. Review training module outlines and contents.
5. Review course materials (including operation and maintenance manuals).
6. Inspect and discuss locations and other facilities required for instruction.
7. Review and finalize training schedule and verify availability of educational materials, instructors, audiovisual equipment, and facilities needed to avoid delays.
8. For instruction that must occur outside, review weather and forecasted weather conditions and procedures to follow if conditions are unfavorable.

B. Training Modules: Develop an instruction program that includes individual training modules for each system, subsystem, and equipment as specified in Division 01 Section "Demonstration and Training."

END OF SECTION

DIVISION 01
SECTION 019115
HVAC COMMISSIONING REQUIREMENTS
TABLE OF CONTENTS

PART 1. GENERAL

1.1. RELATED DOCUMENTS
1.2. SUMMARY
1.3. DEFINITIONS
1.4. CONTRACTOR'S RESPONSIBILITIES
1.5. COMMISSIONING DOCUMENTATION
1.6. SUBMITTALS
1.7. ALTERNATES

PART 2. PRODUCTS – NOT USED

PART 3. EXECUTION

3.1. TESTING PREPARATION
3.2. TAB VERIFICATION
3.3. TESTING

SECTION 019115 - HVAC COMMISSIONING REQUIREMENTS

PART 1 - GENERAL

1.1 RELATED DOCUMENTS

A. Drawings and general provisions of the Contract, including General and Supplementary Conditions and other Division 01 Specification Sections, apply to this Section.

1.2 SUMMARY

A. This Section includes requirements for commissioning the HVAC system and its subsystems and equipment. This Section supplements the general requirements specified in Division 01 Section "General Commissioning Requirements."

B. Related Sections include the following:

1. Division 01 Section "General Commissioning Requirements" for general requirements for commissioning processes that apply to this Section.

C. The following systems and/or equipment shall be commissioned:

1. Fume Hoods.
2. Mice Cage Exhaust System
3. Automatic Temperature Control System.
4. Differential Static Pressure Controllers.
5. Exhaust air systems including fume hoods and laboratory exhaust systems.
6. Exhaust and supply air terminals.
7. Exhaust Fans and ventilation fans.
8. Freeze protection pumps.
9. Fume hood exhaust air terminals.
10. Hot water systems.
11. HVAC controls and sequences of operation.
12. Supply air systems.
13. Supply air terminals including heating coils.
14. Variable frequency drives.

1.3 DEFINITIONS

A. CxA: Commissioning Authority.

B. Systems, Subsystems, and Equipment: Where these terms are used together or separately, they shall mean "as-built" systems, subsystems, and equipment.

C. TAB: Testing, Adjusting, and Balancing.

1.4 CONTRACTOR'S RESPONSIBILITIES

A. The following responsibilities are in addition to those specified in Division 01 Section "General Commissioning Requirements."

B. Contractor:

1. Attend procedures meeting for TAB Work.
2. Certify that TAB Work is complete.
3. Assist performing functional performance tests.

C. Mechanical Contractor:

1. Attend TAB verification testing.
2. Provide measuring instruments and logging devices to record test data, and data acquisition equipment to record data for the complete range of testing for the required test period.
3. Assist performing functional performance tests.

D. HVAC Instrumentation and Control Contractor: With the CxA, review control designs for compliance with the Contract Documents, controllability with respect to actual equipment to be installed, and recommend adjustments to control designs and sequence of operation descriptions.

E. TAB Subcontractor:

1. Contract Documents Review: With the CxA, review the Contract Documents before developing TAB procedures.

a. Verify the following:

1) Accessibility of equipment and components required for TAB Work.
2) Adequate number and placement of duct balancing dampers to allow proper balancing while minimizing sound levels in occupied spaces.
3) Adequate number and placement of balancing valves to allow proper balancing and recording of water flow.
4) Adequate number and placement of test ports and test instrumentation to allow reading and compilation of system and equipment performance data needed to conduct both TAB and commissioning testing.
5) Air and water flow rates have been specified and compared to central equipment output capacities.

b. Identify discontinuities and omissions in the Contract Documents.
c. This review of the Contract Documents by the TAB Subcontractor satisfies requirements for a design review report as specified in Division 23 Section "Testing Adjusting & Balancing for HVAC & Plumbing."
d. Assist performing functional performance tests.

2. Additional Responsibilities: Participate in tests specified in Division 23 Sections "Instrumentation & Controls of HVAC & Plumbing Systems."

F. Electrical Contractor:

1. With the Mechanical Contractor, coordinate installations and connections between and among electrical and HVAC systems, subsystems, and equipment.
2. Attend TAB verification testing.

1.5 COMMISSIONING DOCUMENTATION

A. The following are in addition to documentation specified in Division 01 Section "General Commissioning Requirements."

B. Test Checklists: CxA with assistance of Contractor shall develop test checklists for HVAC systems, subsystems, and equipment, including interfaces and interlocks with other systems. CxA shall prepare separate checklists for each mode of operation and provide space to indicate whether the mode under test responded as required. In addition to the requirements specified in Division 01 Section "General Commissioning Requirements," checklists shall include, but not be limited to, the following:

1. Calibration of sensors and sensor function.
2. Testing conditions under which test was conducted, including (as applicable) ambient conditions, set points, override conditions, and status and operating conditions that impact the results of test.
3. Control sequences for HVAC systems.
4. Strength of control signal for each set point at specified conditions.
5. Responses to control signals at specified conditions.
6. Sequence of response(s) to control signals at specified conditions.
7. Electrical demand or power input at specified conditions.
8. Power quality and related measurements.
9. Expected performance of systems, subsystems, and equipment at each step of test.
10. Narrative description of observed performance of systems, subsystems, and equipment. Notation to indicate whether the observed performance at each step meets the expected results.
11. Interaction of auxiliary equipment.
12. Issues log.

1.6 SUBMITTALS

A. The following submittals are in addition to those specified in Division 01 Section "General Commissioning Requirements."

B. Testing Procedures: CxA shall submit detailed testing plan, procedures, and checklists for each series of tests. Submittals shall include samples of data reporting sheets that will be part of the reports.

C. Certificate of Readiness: CxA shall compile certificates of readiness from Contractor certifying that systems, subsystems, equipment, and associated controls are ready for testing.

D. Certificate of Completion of Installation, Prestart, and Startup: CxA shall certify that installation, prestart, and startup activities have been completed. Certification shall include

completed checklists provided by TAB Subcontractor as specified in Division 23 Section "Testing Adjusting & Balancing for HVAC & Plumbing."

E. Test and Inspection Reports: CxA shall compile and submit test and inspection reports and certificates, and shall include them in systems manual and commissioning report.

F. Corrective Action Documents: CxA shall submit corrective action documents.

G. Certified TAB Reports: CxA shall submit verified, certified TAB reports.

1.7 ALTERNATES

A. Refer to Division 01 Section, “Alternates” for description of work under this section affected by alternates.

PART 2 - PRODUCTS (Not Used)

PART 3 - EXECUTION

3.1 TESTING PREPARATION

A. Prerequisites for Testing:

1. Certify that HVAC systems, subsystems, and equipment have been completed, calibrated, and started; are operating according to the Contract Documents; and that Certificates of Readiness are signed and submitted.
2. Certify that HVAC instrumentation and control systems have been completed and calibrated; are operating according to the Contract Documents; and that pretest set points have been recorded.
3. Certify that TAB procedures have been completed, and that TAB reports have been submitted, discrepancies corrected, and corrective work approved.
4. Test systems and intersystem performance after approval of test checklists for systems, subsystems, and equipment.
5. Set systems, subsystems, and equipment into operating mode to be tested (e.g., normal shut down, normal auto position, normal manual position, unoccupied cycle, emergency power, and alarm conditions).
6. Verify each operating cycle after it has been running for a specified period and is operating in a steady-state condition.
7. Inspect and verify the position of each device and interlock identified on checklists. Sign off each item as acceptable, or failed. Repeat this test for each operating cycle that applies to system being tested.
8. Check safety cutouts, alarms, and interlocks with life-safety systems during each mode of operation.
9. Annotate checklist or data sheet when a deficiency is observed.
10. Verify equipment interface with monitoring and control system and TAB criteria; include the following:
    a. All pump status alarms.

b. Supply and return flow rates for VAV and constant volume systems in each operational mode.
c. Minimum outdoor-air intake in each operational mode and at minimum and maximum airflows.
d. Building pressurization.
e. Total exhaust airflow and total outdoor-air intake.
f. Minimum outdoor-air intake in each operational mode and at minimum and maximum airflows.
g. Supply, outside air, exhaust and return air flow rates for existing air handling unit in each operating mode.
h. Pump flow rates, pressure and amperage at each operating mode.
i. Sequences of operation of all HVAC equipment.
j. Variable speed drive parameters at each operated mode.
k. Supply and return air flow rates for all HVAC equipment.
l. Test freeze protection pumps.
m. Laboratory fume hood flow rates/face velocities.
n. Laboratory fume hood exhaust fan flow rates, lead/lag operation.

11. Verify proper responses of monitoring and control system controllers and sensors to include the following:

    a. For each controller or sensor, record the indicated monitoring and control system reading and the test instrument reading. If initial test indicates that the test reading is outside of the control range of the installed device, check calibration of the installed device and adjust as required. Retest malfunctioning devices and record results on checklist or data sheet.
    b. Report deficiencies and prepare an issues log entry.

12. Verify that HVAC equipment field quality-control testing has been completed and approved. CxA shall direct, witness, and document field quality-control tests, inspections, and startup specified in individual Division 23 Sections.

B. Testing Instrumentation: Install measuring instruments and logging devices to record test data for the required test period. Instrumentation shall monitor and record full range of operating conditions and shall allow for calculation of total capacity of system for each mode of operation. For individual room cooling tests, provide temporary heaters to impose a cooling load. Operational modes include the following:

1. Heating/Cooling Mode.
2. Occupied and unoccupied.
3. Warm up and cool down.
4. Economizer cycle.
5. Emergency power supply.
6. Life-safety and safety systems.
7. Duct detectors.
8. Fire safety.
9. Temporary upset of system operation.
10. Partial occupancy conditions.
11. Special cycles.
12. Lead/lag modes where redundant equipment is indicated.
13. All alarms.

14. Laboratory exhaust air fans at full, partial, and minimum air flow rates.
15. Freeze protection pump operation.

3.2 TAB VERIFICATION

A. TAB Subcontractor shall coordinate with CxA for work required in Division 23 Section "Testing Adjusting & Balancing for HVAC & Plumbing." TAB Subcontractor shall copy CxA with required reports, sample forms, checklists, and certificates.

B. Contractor, HVAC Contractor, and CxA shall witness TAB Work.

C. TAB Preparation:

1. TAB Subcontractor shall provide CxA with data required for "Pre-Field TAB Engineering Reports" specified in Division 23 Section "Testing Adjusting & Balancing for HVAC & Plumbing."

   a. CxA shall use this data to certify that prestart and startup activities have been completed for systems, subsystems, and equipment installation.

D. Verification of Final TAB Report:

1. CxA shall select, at random, 10 percent of report for field verification.
2. CxA shall notify TAB Subcontractor 10 days in advance of the date of field verification; however, notice shall not include data points to be verified. The TAB Subcontractor shall use the same instruments (by model and serial number) that were used when original data were collected.
3. Failure of an item is defined as follows:

   a. For all readings a deviation of more than 10 percent.

4. Failure of more than 10 percent of selected items shall result in rejection of final TAB report.

E. If deficiencies are identified during verification testing, CxA shall notify the HVAC Contractor and Architect, and shall take action to remedy the deficiency. Architect shall review final tabulated checklists and data sheets to determine if verification is complete and that system is operating according to the Contract Documents.

F. CxA shall certify that TAB Work has been successfully completed.

3.3 TESTING

A. Test systems and intersystem performance after test checklists for systems, subsystems, and equipment have been approved.

B. Perform tests using design conditions whenever possible.

1. Simulate conditions by imposing an artificial load when it is not practical to test under design conditions and when written approval for simulated conditions is received from

CxA. Before simulating conditions, calibrate testing instruments. Set and document simulated conditions and methods of simulation. After tests, return settings to normal operating conditions.

2. Alter set points when simulating conditions is not practical and when written approval is received from CxA.
3. Alter sensor values with a signal generator when design or simulating conditions and altering set points are not practical. Do not use sensor to act as signal generator to simulate conditions or override values.

C. Scope of HVAC Contractor Testing:

1. Testing scope shall include entire HVAC installation, from central equipment for heat generation and refrigeration through distribution systems to each conditioned space. It shall include measuring capacities and effectiveness of operational and control functions.
2. Test all operating modes, interlocks, control responses, responses to abnormal or emergency conditions, and verify proper response of building automation system controllers and sensors.

D. Detailed Testing Procedures: CxA, with HVAC Contractor, TAB Subcontractor, and HVAC Instrumentation and Control Contractor, shall prepare detailed testing plans, procedures, and checklists for HVAC systems, subsystems, and equipment.

E. HVAC Instrumentation and Control System Testing:

1. Field testing plans and testing requirements are specified in Division 23 Section "Instrumentation & Controls of HVAC & Plumbing Systems". The CxA, HVAC Contractor, Equipment Provider/Manufacturer and the HVAC Instrumentation and Control Contractor shall collaborate to prepare testing plans.
2. CxA shall convene a meeting of appropriate entities to review test report of HVAC instrumentation and control systems.

F. Heat-Generation System Testing: HVAC Contractor shall prepare a testing plan to verify performance of existing air handling units, existing terminal unit coils, new terminal unit coils, and auxiliary equipment. Plan shall include the following:

1. Sequence of testing and testing procedures for each item of equipment and section of pipe to be tested, identified by identification marker. Markers shall be keyed to Drawings for each pipe sector showing the physical location of each item of equipment and pipe test section. Drawings shall be formatted to allow each item of equipment and section of piping to be physically located and identified when referred to in the system testing plan.
2. Tracking checklist for managing and ensuring that all pipe sections have been tested.

G. HVAC Distribution System Testing: HVAC Contractor shall prepare a testing plan to verify performance of air handling units, hydronic distribution systems, special exhaust and other distribution systems. Include HVAC terminal equipment and unitary equipment. Plan shall include the following:

1. Sequence of testing and testing procedures for each item of equipment and section of pipe to be tested, identified by identification marker. Markers shall be keyed to Drawings showing the physical location of each item of equipment and pipe test section. Drawings

shall be formatted to allow each item of equipment and section of piping to be physically located and identified when referred to in the system testing plan.

2. Tracking checklist for managing and ensuring that all pipe sections have been tested.
3. Equipment, air flow rates, air temperatures, fluid flow rates, safeties, and freeze protection pump operation.

H. Deferred Testing:

1. If tests cannot be completed because of a deficiency outside the scope of the HVAC system, the deficiency shall be documented and reported to Owner. Deficiencies shall be resolved and corrected by appropriate parties and test rescheduled.
2. If the testing plan indicates specific seasonal testing, appropriate initial performance tests shall be completed and documented and additional tests scheduled.

I. Testing Reports:

1. Reports shall include measured data, data sheets, and a comprehensive summary describing the operation of systems at the time of testing.
2. Include data sheets for each controller to verify proper operation of the control system, the system it serves, the service it provides, and its location. For each controller, provide space for recording its readout, the reading at the controller's sensor(s), plus comments. Provide space for testing personnel to sign off on each data sheet.
3. Prepare a preliminary test report. Deficiencies will be evaluated by Engineer to determine corrective action. Deficiencies shall be corrected and test repeated.

END OF SECTION

SECTION 078413
FIRE PROTECTION, HVAC & PLUMBING PENETRATION FIRESTOPPING
TABLE OF CONTENTS

PART 1 GENERAL

1.1 SUMMARY
1.2 REFERENCES
1.3 DEFINITIONS
1.4 SYSTEM DESCRIPTION
1.5 SUBMITTALS
1.6 QUALITY ASSURANCE
1.7 DELIVERY, STORAGE AND HANDLING
1.8 PROJECT CONDITIONS
1.9 WARRANTY

PART 2 PROJECTS

2.1 THROUGH PENETRATION FIRESTOPPING OF FIRE-RATED CONSTRUCTION
2.2 SMOKE STOPPING AT SMOKE PARTITIONS
2.3 ACCESSORIES

PART 3 EXECUTION

3.1 EXAMINATION
3.2 PREPARATION
3.3 INSTALLATION
3.4 FIELD QUALITY CONTROL
3.5 ADJUSTING AND CLEANING
3.6 SYSTEMS AND APPLICATION SCHEDULES

SECTION 078413 FIRE PROTECTION, HVAC & PLUMBING PENETRATION FIRESTOPPING

PART 1 GENERAL

1.1 SUMMARY

A. Drawings and general provisions of the Contract, including General and Supplementary Conditions and Division 01 Specification Sections, apply to this Section.

B. Section includes:

1. Through-penetration firestopping in fire rated construction.

2. Through-penetration smoke-stopping in smoke partitions.

1.2 REFERENCES

A. Underwriters Laboratories

1. UL Fire Resistance Directory

a. Through-penetration firestop devices (XHCR)

b. Fire resistance rating (BXUV)

c. Through-penetration firestop systems (XHEZ)

d. Fill, void, or cavity material (XHHW)

B. American Society for Testing and Materials Standards:

1. ASTM E 814-88: Standard Test Method for Fire Tests of Through-Penetration Firestops.

1.3 DEFINITIONS

A. Assembly: Particular arrangement of materials specific to given type of construction described or detailed in referenced documents.

B. Barriers: Time-rated fire walls, smoke barrier walls, time-rated ceiling/floor assemblies and structural floors.

C. Firestopping: Methods and materials applied in penetrations and unprotected openings to limit spread of heat, fire, gasses and smoke.

D. Penetration: Opening or foreign material passing through or into barrier or structural floor such that full thickness of rated materials is not obtained.

E. System: Specific products and applications, classified and numbered by Underwriters Laboratories, Inc. to close specific barrier penetrations.

F. Sleeve: Metal fabrication or pipe section extended through thickness of barrier and used to permanently guard penetration. Sleeves are described as part of penetrating system in other sections and may or may not be required.

1.4 SYSTEM DESCRIPTION

A. Design Requirements

1. Fire-rated construction: Maintain barrier and structural floor fire resistance ratings including resistance to cold smoke at all penetrations.

2. Smoke barrier construction: Maintain barrier and structural floor resistance to cold smoke at all penetrations.

1.5 SUBMITTALS

A. Submit in accordance with Division 01 Section *Submittal Procedures*, unless otherwise indicated.

B. Product data: Manufacturer's specifications and technical data including the following:

1. Detailed specification of construction and fabrication.

2. Manufacturer's installation instructions.

C. Shop drawings: Indicate dimensions, description of materials and finishes, general construction, specific modifications, component connections, anchorage methods, hardware, and installation procedures, plus the following specific requirements.

1. Details of each proposed assembly identifying intended products and applicable UL system number, or UL classified devices.

2. Manufacturer or manufacturer's representative shall provide qualified engineering judgment and drawings relating to non-standard applications as needed.

D. Quality control submittals:

1. Statement of qualifications.

E. Applicators' qualifications statement:

1. List past projects indicating required experience.

1.6 QUALITY ASSURANCE

A. Installer's qualifications: Fire experienced in installation or application of systems similar in complexity to those required for this project, plus the following:

1. Acceptable to or licensed by manufacturer, State or local authority where applicable.

2. At least 2 years experience with systems.

3. Successfully completed at least 5 comparable scale projects using this system.

B. Local and State regulatory requirements: Submit forms or acceptance for proposed assemblies not conforming to specific UL Firestop System numbers, or UL classified devices.

C. Materials shall have been tested to provide fire rating at least equal to that of the construction.

1.7 DELIVERY, STORAGE, AND HANDLING

A. Packing and shipping:

1. Deliver products in original unopened packaging with legible manufacturer's identification.

2. Coordinate delivery with scheduled installation date, allow minimum storage at site.

B. Storage and protection: Store materials in a clean, dry, ventilated location. Protect from soiling, abuse, moisture and freezing when required. Follow manufacturer's instructions.

1.8 PROJECT CONDITIONS

A. Existing condition:

1. Verify existing conditions and substrates before starting work. Correct unsatisfactory conditions before proceeding.

2. Proceed with installation only after penetrations of the substrate and supporting brackets have been installed.

B. Environmental requirements:

1. Furnish adequate ventilation if using solvent.

2. Furnish forced air ventilation during installation if required by manufacturer.

3. Keep flammable materials away from sparks or flame.

4. Provide masking and drop cloths to prevent contamination of adjacent surfaces by firestopping materials.

1.9 WARRANTY

A. Submit copies of written warranty agreeing to repair or replace joint sealers which fail in

joint adhesion, extrusion resistance, migration resistance, or general durability or appear to deteriorate in any other manner not clearly specified by submitted manufacturer's data as an inherent quality of the material for the exposure indicated. The warranty period shall be two (2) years from date of substantial completion unless otherwise noted.

PART 2 PRODUCTS

2.1 THROUGH-PENETRATION FIRESTOPPING OF FIRE-RATED CONSTRUCTION

A. Systems of devices listed in the UL Fire Resistance Directory under categories XHCR and XHEZ may be used, providing that it conforms to the construction type, penetrant type, annular space requirements and fire rating involved in each separate instance, and that the system be symmetrical for wall applications. Systems or devices must be asbestos-free.

1. Additional requirements: Withstand the passage of cold smoke either as an inherent property of the system, or by the use of a separate product included as a part of the UL system or device, and designed to perform this function.

2. Acceptable manufacturers and products.

a. Those listed in the UL Fire Resistance directory for the UL System involved and as further defined in the System and Applications Schedule in Part 3.6 of this section.

3. All firestopping products must be from a single manufacturer. All trades shall use products from the same manufacturer unless otherwise noted.

2.2 SMOKE-STOPPING AT SMOKE PARTITIONS

A. Through-penetration smoke-stopping: Any system complying with the requirements for through-penetration firestopping in fire-rated construction, as specified in The Systems and Applications Schedule in Part 3.6 of this section, is acceptable, provided that the system includes the specified smoke seal or will provide a smoke seal. The length of time of the fire resistance may be disregarded.

2.3 ACCESSORIES

A. Fill, void or cavity materials: As classified under category XHHW in the UL Fire Resistance Directory.

B. Forming materials: As classified under category XHKU in the UL Fire Resistance Directory.

PART 3 EXECUTION

3.1 EXAMINATION

A. Verification of conditions: Examine areas and conditions under which work is to be

performed and identify conditions detrimental to proper or timely completion.

1. Verify barrier penetrations are properly sized and in suitable condition for application of materials.

2. Do not proceed until unsatisfactory conditions have been corrected.

B. Coordinate an inspection of all Mechanical Firestopping systems with the Fire Marshal prior to installation of ceilings, walls, etc.

3.2 PREPARATION

A. Clean surfaces to be in contact with penetration seal materials of dirt, grease, oil, loose materials, rust, or other substances that may affect proper fitting, adhesion, or the required fire resistance.

3.3 INSTALLATION

A. Install penetration seal materials in accordance with printed instructions of the UL Fire Resistance Directory and in accordance with manufacturer's instruction.

B. Seal holes or voids made by penetrations to ensure an effective smoke barrier.

C. Protect materials from damage on surfaces subject to traffic.

D. When large openings are created in walls or floors to permit installation of pipes, ducts, or other items, close unused portions of opening with firestopping materials tested for the application. See UL Fire Resistance Directory or Section 3.6 of this document.

E. Install smoke stopping as specified for firestopping.

3.4 FIELD QUALITY CONTROL

A. Examine penetration sealed areas to ensure proper installation before concealing or enclosing areas.

B. Keep areas of work accessible until inspection by applicable code authorities.

C. Perform under this section patching and repairing of firestopping caused by cutting or penetration by other trades.

3.5 ADJUSTING AND CLEANING

A. Clean up spills of liquid components.

B. Neatly cut and trim materials as required.

C. Remove equipment, materials and debris, leaving area in undamaged, clean condition.

3.6 SYSTEMS AND APPLICATION SCHEDULES*

PENETRATING ITEM	CONCRETE	GYPSUM	WOOD FLOOR/CEILING
Metal Pipe	CAJ1001 CP25S/L, CP25N/S CAJ1006 CS-195+, FS-195+ CAJ1007 FS-195+, 1-inch& 2-inch Wide CAJ1009 2000, 2000+, 2003 CAJ1010 2000, 2000+, 2003 CAJ1012 2000, 2000+, 2003 CAJ1013 2000, 2000+, 2003 CAJ1014 2000, 2000+, 2003 CAJ1015 2000, 2000+, 2003 CAJ1017 FD 150 CAJ1021 FD 150 CAJ1027 MPS-2+ CAJ1044 CP 25WB+ CAJ1052 CP 25S/L, CP 25N/S CAJ1058 2000, 2000+, 2003 CAJ1060 2000, 2000+, 2003 CAJ1063 2000, 2000+, 2003 CAJ1066 CP 25N/S,CP 25S/L, CP 25WB+ CAJ1091 CP 25N/S,CP 25S/L, CP 25WB+ CAJ1092 CP 25WB+ CAJ1112 FS-195+ CAJ1160 CP 25S/L, CP 25N/S CAJ1175 CP 25WB+ CAJ1176 CP 25WB+ CAJ1188 2000+ CBJ1020 CS-195+, FS-195+ CBJ1021 CS-195+, MPS-2+ CBJ1031 2001 CBJ1032 2001 FA1002 CP 25WB+ WJ1010 CP25WB+ WJ1023 2001	WL1001 CP 25 WL1002 FS-195+ WL1003 CP 25WB+,CP 25N/S WL1008 2000+ WL1009 2000+ WL1010 2000+ WL1016 CP 25WB+ WL1017 CP 25WB+,CP 25N/S WL1032 CP 25WB+,CP 25N/S WL1036 FD 150 WL1037 CS-195+,FS-195+ WL1067 CP 25N/S WL1073 CP 25WB+ WL1080 MPS2+ WL1082 2000+	FC1002 CP 25 FC1003 2000,2000+,20003 FC1006 CP 25WB+
Non-Metallic	CAJ2001 FS-195+, 1-inch& 2-inch WIDE, PPD'S CAJ2002 FS-195+ CAJ2003 CS-195+, FS-195+ CAJ2005 FS-195 CAJ2006 FS-195+ CAJ2013 FS-195+ CAJ2019 2000, 2000+, 2003 CAJ2027 FS-195+, CP 25N/S, CP 25S/L, CP 25WB+ CAJ2028 FS-195, MPS-2+ CAJ2029 FS-195+, PPD'S CAJ2030 CS-195+, FS-195+ CAJ2040 FS-195+, CP 25WB+ CAJ2044 FS-195+, CP 25N/S, CP 25S/L CP 25 WB+ CAJ2090 FS-195+ CAJ2177 FS-195+, PPD'S FA2001 FS-195+, PPD'S FS2002 CS-195+, FS-195+, MPS-2+, PPD'S FA2011 FS-195+ WJ2012 FS-195+ 1-inch WIDE	WL2002 FS-195+, PPD'S WL2003 FS-195+ WL2004 FS-195+ WL2005 FS-195+ 4' WIDE WL2006 FS-195+ WL2013 FS-195+ WL2031 CS-195+, FS-195+ WL2032 CS-195+, FS-195+ WL2033 FS-195+ WL2073 FS-195+ 1-inch WIDE	FC2002 FS-195+, PPD'S FC2007 FS-195+, PPD'S FC2008 FS-195+ FC2009 FS-195+, PPD'S FC2024 FS-195 FC2026 FS-195+ FC2028 FS-195, 1' & 2-inch WIDE, PPD'S

PENETRATING ITEM	CONCRETE	GYPSUM	WOOD FLOOR/CEILING
Insulated Metallic Pipe	CAJ5001 CP 25N/S, CP 25S/L, CP 25WB+ CAJ5002 FS-195+ CAJ5003 FS-195+ CAJ5005 MPS-2+ CAJ5009 2000+, 2003 CAJ5017 FS-195+, CP 25 CAJ5022 FS-195+ CAJ5024 FS-195+ CAJ5030 CS-195+, FS-195+ CAJ5041 2000, 2000+, 2003 CAJ5060 CP 25WB+ CAJ5074 2000+ CBJ5002 CP 25 CBJ5003 FS-195+ FA5001 FS-195+, CP 25WB+	WL5001 FS-195+ WL5002 FS-195+ WL5009 FS-195+ WL5010 FS-195+ WL5011 CP 25WB+ WL5032 2000+ WL5038 CP 25WB+ WL5039 CP 25WB+ WL5040 CP 25WB+ WL5045 CP 25WB+ WL5053 2000+	FC5002 FS-195+ FC5008 FS-195+
Miscellaneous Mechanical HVAC Ducts	CAJ7001 CP 25N/S CP 25S/L CAJ7003 CP 25WB+ CAJ7009 DUCT WRAP, BULK PUTTY		FC7001 CP 25S/L, CP 25N/S
Mixed Penetrating Items Combos	CAJ8001 CS-195+ FS-195 CAJ8003 2000, 2000+, 20003 CAJ8004 2000, 2000+, 20003 CAJ8006 2001 CAJ8013 FS-195+, CP 25 CBJ8004 CS-195, FS-195+ CBJ8005 CS-195+, MPS-2+ CBJ8008 2001 FA8001 FS-195+, CP 25WB+	WL8002 CS-195+, FS-195+	

* Underwriter's Laboratories, Inc., Fire Resistance Directory.

END OF SECTION

DIVISION 23 SECTION 230500
COMMON WORK RESULTS FOR HVAC
TABLE OF CONTENTS

PART 1 GENERAL

1.1 SUMMARY
1.2 PERMITS AND FEES
1.3 EXAMINATION OF SITE
1.4 CONTRACTOR QUALIFICATION
1.5 MATERIALS AND EQUIPMENT
1.6 FIRE SAFE MATERIALS
1.7 REFERENCED STANDARDS, CODES AND SPECIFICATIONS
1.8 SUBMITTALS, REVIEW AND ACCEPTANCE
1.9 SHOP DRAWINGS
1.10 SUPERVISION AND COORDINATION
1.11 CUTTING AND PATCHING
1.12 PENETRATION OF WATERPROOF CONSTRUCTION
1.13 CONNECTIONS AND ALTERATIONS TO EXISTING WORK
1.14 DEMOLITION
1.15 EXCAVATION AND BACKFILLING
1.16 DRIVE GUARDS
1.17 VIBRATION ISOLATION
1.18 FASTENERS/CAPS
1.19 DEFINITIONS
1.20 MINIMUM EFFICIENCY REQUIREMENTS
1.21 SYSTEM INTEGRATION
1.22 NAMEPLATES

PART 2 ELECTRICAL REQUIREMENTS

2.1 GENERAL MOTOR AND ELECTRICAL REQUIREMENTS
2.2 MOTORS AND CONTROLS
2.3 MOTOR INSTALLATION
2.4 WIRING DIAGRAMS
2.5 VARIABLE FREQUENCY DRIVE MOTOR BEARING PROTECTIVE RINGS

PART 3 EXECUTION

3.1 EQUIPMENT INSTALLATION - COMMON REQUIREMENTS
3.2 SUPPORTS, HANGERS AND FOUNDATIONS
3.3 PROVISIONS FOR ACCESS
3.4 PAINTING AND FINISHES
3.5 CLEANING OF SYSTEMS
3.6 COLOR SELECTION
3.7 PROTECTION OF WORK
3.8 OPERATION OF EQUIPMENT
3.9 DEMONSTRATION AND TRAINING VIDEO RECORDINGS
3.10 IDENTIFICATION, FLOW DIAGRAMS, ELECTRICAL DIAGRAMS AND OPERATING INSTRUCTIONS
3.11 WALL AND FLOOR PENETRATIONS

3.12 RECORD DRAWINGS
3.13 WARRANTY
3.14 LUBRICATION
3.15 OPERATIONS AND MAINTENANCE MANUALS
3.16 INSTALLATION AND COORDINATION DRAWINGS
3.17 PIPING SYSTEMS TESTING
3.18 EQUIPMENT BY OTHERS
3.19 ADDITIONAL BELTS
3.20 PHASING
3.21 STRAINER CLEANING
3.22 OUTAGES

SECTION 230500 COMMON WORK RESULTS FOR HVAC

PART 1. GENERAL

1.1. SUMMARY

A. Drawings and general provisions of the Contract, including General and Supplementary Conditions and Division 01 Specification Sections, apply to this Section.

B. Provide all labor, materials, equipment, and services necessary for and incidental to the complete installation and operation of all mechanical work.

C. Unless otherwise specified, all submissions shall be made to, and acceptances and approvals made by the Architect and the Engineer.

D. Contract Drawings are generally diagrammatic and all offsets, fittings, transitions and accessories are not necessarily shown. Furnish and install all such items as may be required to fit the work to the conditions encountered. Arrange piping, ductwork, equipment, and other work generally as shown on the contract drawings, providing proper clearance and access. Where departures are proposed because of field conditions or other causes, prepare and submit detailed shop drawings for approval in accordance with *Submittals* specified below. The right is reserved to make reasonable changes in location of equipment, piping, and ductwork, up to the time of rough-in or fabrication.

E. Conform to the requirements of all rules, regulations and codes of local, state and federal authorities having jurisdiction.

F. Coordinate the work under Division 23 with the work of all other construction trades.

G. Be responsible for all construction means, methods, techniques, procedures, and phasing sequences used in the work. Furnish all tools, equipment and materials necessary to properly perform the work in first class, substantial, and workmanlike manner, in accordance with the full intent and meaning of the contract documents.

1.2. PERMITS AND FEES

A. Obtain all permits and pay taxes, fees and other costs in connection with the work. File necessary plans, prepare documents, give proper notices and obtain necessary approvals. Deliver inspection and approval certificates to Owner prior to final acceptance of the work.

B. Permits and fees shall comply with the Division 01, *General Requirements* of the specification.

1.3. EXAMINATION OF SITE

A. Examine the site, determine all conditions and circumstances under which the work must be done, and make all necessary allowances for same. No additional cost to the Owner will be permitted for contractors' failure to do so.

B. Examine and verify specific conditions described in individual specifications sections.

C. Verify that utility services are available, of the correct characteristics, and in the correct locations.

1.4. CONTRACTOR QUALIFICATION

A. Any Contractor or Subcontractor performing work under Division 23 shall be fully qualified and acceptable to the Architect/Engineer and Owner. Submit the following evidence when requested:

1. A list of not less than five comparable projects which the Contractor completed.

2. Letter of reference from not less than three registered professional engineers, general contractors or building owners.

3. Local and/or State License, where required.

4. Membership in trade or professional organizations where required.

B. A Contractor is any individual, partnership, or corporation, performing work by contract or subcontract on this project.

C. Acceptance of a Contractor or Subcontractor will not relieve the Contractor or subcontractor of any contractual requirements or his responsibility to supervise and coordinate the work, of various trades.

1.5. MATERIALS AND EQUIPMENT

A. Materials and equipment installed as a permanent part of the project shall be new, unless otherwise indicated or specified, and of the specified type and quality. Existing items of equipment are being relocated under another Division of these specifications. The Contractor shall be responsible for connecting all utilities as shown on the drawings, to equipment identified as existing.

B. Where material or equipment is identified by proprietary name, model number and/or manufacturer, furnish named item, or its equal, subject to approval by Engineer. Substituted items shall be equal or better in quality and performance and must be suitable for available space, required arrangement, and application. Submit all data necessary to determine suitability of substituted items, for approval.

C. The suitability of named item only has been verified. Where more than one item is named, only the first named item has been verified as suitable. Substituted items, including items other than first named shall be equal or better in quality and performance to that of specified items, and must be suitable for available space, required arrangement and application. Contractor, by providing other than the first named manufacturer, assumes responsibility for all necessary adjustments and modifications necessary for a satisfactory installation. Adjustments and modifications shall include but not be limited to electrical, structural, support, and architectural work.

D. Substitution will not be permitted for specified items of material or equipment where noted.

E. All items of equipment furnished shall have a service record of at least five (5) years.

1.6. FIRE SAFE MATERIALS

A. Unless otherwise indicated, materials and equipment shall conform to UL, NFPA and ASTM standards for fire safety with smoke and fire hazard rating not exceeding flame spread of 25 and smoke developed of 50.

1.7. REFERENCED STANDARDS, CODES AND SPECIFICATIONS

A. Specifications, Codes and Standards listed below are included as part of this specification, latest edition.

B. AABC - Associated Air Balance Council
C. ACGIH - American Conference of Governmental Industrial Hygienist
D. ADC - Air Diffusion Council
E. AMCA - Air Movement and Control Association
F. ANSI - American National Standards Institute
G. ARI - Air Conditioning and Refrigeration Institute
H. ASHRAE - American Society of Heating, Refrigerating and Air Conditioning Engineers
I. ASME - American Society of Mechanical Engineers
J. ASTM - American Society for Testing and Materials
K. IBC - International Building Code
L. IEEE - Institute of Electrical and Electronics Engineers
M. MSSP - Manufacturers Standards Society of the Valve and Fittings Industry
N. NEC - National Electrical Code
O. NEMA - National Electrical Manufacturers Association
P. NFPA - National Fire Protection Association
Q. SMACNA - Sheet Metal and Air Conditioning Contractors National Association
R. UL - Underwriters' Laboratories
S. State of Delaware Fire Protection Regulations.
T. All mechanical equipment and materials shall comply with the codes and standards listed in the latest edition of ASHRAE HVAC Applications Handbook, Chapter entitled *Codes and Standards*.

1.8. SUBMITTALS, REVIEW AND ACCEPTANCE

A. Equipment, materials, installation, workmanship and arrangement of work are subject to review and acceptance. No substitution will be permitted after acceptance of equipment or materials except where such substitution is considered by the Engineer to be in best interest of Owner.

B. After acceptance of Material and Equipment List, submit six (6) copies or more as required under General Conditions of complete descriptive data for all items. Data shall consist of specifications, data sheets, samples, capacity ratings, performance curves, operating characteristics, catalog cuts, dimensional drawings, wiring diagrams, installation instructions, and any other information necessary to indicate complete

compliance with Contract Documents. Edit submittal data specifically for application to this project.

C. Thoroughly review and stamp all submittals to indicate compliance with contract requirements prior to submission. Coordinate installation requirements and any electrical requirements for equipment submitted. Contractor shall be responsible for correctness of all submittals.

D. Submittals will be reviewed for general compliance with design concept in accordance with contract documents, but dimensions, quantities, or other details will not be verified.

E. Identify submittals, indicating intended application, location and service of submitted items. Refer to specification sections or paragraphs and drawings where applicable. Clearly indicate exact type, model number, style, size and special features of proposed item. Submittals of a general nature will not be acceptable. For substituted items, clearly list on the first page of the submittal all differences between the specified item and the proposed item. The contractor shall be responsible for corrective action and maintaining the specification requirements if differences have not been clearly indicated in the submittal.

F. Submit actual operating conditions or characteristics for all equipment where required capacities are indicated. Factory order forms showing only required capacities will not be acceptable. Call attention, in writing, to deviation from contract requirements.

G. Acceptance will not constitute waiver of contract requirements unless deviations are specifically indicated and clearly noted. Use only final or corrected submittals and data prior to fabrication and/or installation.

H. For any submittal requiring more than two (2) reviews by the Engineer (including those caused by a change in subcontractor or supplier) the Owner will withhold contractor's funds by a change order to the contract to cover the cost of additional reviews. One review is counted for each action including rejection or return of any reason.

I. For resubmissions, the Contractor must address in writing all of the Engineer’s comments on the original submission to verify compliance.

1.9. SHOP DRAWINGS

A. Prepare and submit shop drawings for all mechanical equipment, specially fabricated items, modifications to standard items, specially designed systems where detailed design is not shown on the contract drawings, or where the proposed installation differs from that shown on contract drawings.

B. Submit data and shop drawings including but not limited to the list below, in addition to provisions of the paragraph above. Identify all shop drawings by the name of the item and system and the applicable specification paragraph number and drawing number.

C. Every submittal including, but not limited to the list below, shall be forwarded with its own transmittal as a separate, distinct shop drawing. Grouping of items/systems that are not related shall be unacceptable.

D. Items and Systems

Access Doors/Panels including layouts and locations
Air Distribution Systems
Automatic Temperature Control Systems and Equipment
Central Control and Monitoring Systems (CCMS) and Equipment
Coordinated Drawings
Drip Pans
Duct Materials
Equipment Rails
Exterior Equipment Supports
Fume Hood Air Terminal Units
Mice Cage Exhaust Fans
Fire Stopping - Methods and Materials
Fume Hoods
Fume Hood Exhaust Fans
Grilles, Registers, Diffusers
Identification Systems
In-Line Circulators
Material and Equipment Lists
Operations and Maintenance Manuals
Pipe Materials Including Itemized Schedules
Preliminary Testing and Balancing Reports
Roof Curbs
Static Pressure Gauges
Test Certificates
Terminal Air Units
Thermal Insulation Materials Include Table Summaries
Thermometers and Gauges
Variable Air Volume Boxes
Variable Frequency Drive Motor Bearing Protective Rings
Variable Speed Drives
Vibration Isolation Materials
Weatherproof Assembly Components
Wiring Diagrams, Flow Diagrams and Operating Instructions

E. Contractor, additionally, shall submit for review any other shop drawings as required by the Engineer. No item shall be delivered to the site, or installed, until the Contractor has received a submittal from the Engineer marked *Reviewed* or *Comments Noted*. After the proposed materials have been reviewed, no substitution will be permitted except where approved by the Engineer.

F. For any shop drawing requiring more than two (2) reviews by the Engineer (including those caused by a change in subcontractor or supplier) the Owner will withhold contractor's funds by a change order to the contract to cover the cost of additional reviews. One review is counted for each action including rejection or return of any reason.

1.10. SUPERVISION AND COORDINATION

A. Provide complete supervision, direction, scheduling, and coordination of all work under

the Contract, including that of subcontractors.

B. Coordinate rough-in of all work and installation of sleeves, anchors, and supports for piping, ductwork, equipment, and other work performed under Division 23.

C. Arrange for pipe spaces, chases, slots, and openings in building structure during progress of construction to allow for mechanical installations.

D. Coordinate electrical work required under Division 23 with that under Division 26. Coordinate all work under Division 23 with work under all other Divisions.

E. Supply services of an experienced (10 year minimum) and competent Project Manager to be in constant charge of work at site.

F. Where a discrepancy exists within the specifications or drawings or between the specifications and drawings, the more stringent (or costly) requirement shall apply until clarification can be obtained from the Engineer. Failure to clarify such discrepancies with the Engineer will not relieve the Contractor of the responsibility of conforming to the requirements of the Contract.

G. Failure of contractor to obtain a full and complete set of contract documents (either before or after bidding) will not relieve the contractor of the responsibility of complying with the intent of the contract documents.

H. Where required arrange for manufacturer to ship equipment in modules.

1.11. CUTTING AND PATCHING

A. Accomplish all cutting and patching necessary for the installation of work under Division 23. Damage resulting from this work to other work already in place, shall be repaired at Contractor's expense. Where cutting is required, perform work in neat and workmanlike manner. Restore disturbed work to match and blend with existing construction and finish, using materials compatible with the original. Use mechanics skilled in the particular trades required.

B. Do not cut structural members without approval from the Engineer.

1.12. PENETRATION OF WATERPROOF CONSTRUCTION

A. Coordinate the work to minimize penetration of waterproof construction, including roofs, exterior walls, and interior waterproof construction. Where such penetrations are necessary, furnish and install all necessary curbs, sleeves, flashings, fittings and caulking to make penetrations absolutely watertight.

B. Where pipes penetrate roofs, flash pipe with Stoneman *Stormtite,* Pate or approved equal, roof flashing assemblies with skirt and caulked counter flashing sleeve.

C. Furnish and install pitch pockets or weather tight curb assemblies where required.

D. Furnish and install roof drains, curbs, vent assemblies, and duct sleeves specifically designed for application to the particular roof construction, and install in accordance with

the manufacturer's instructions. The Contractor shall be responsible for sleeve sizes and locations. All roof penetrations shall be installed in accordance with manufacturer's instructions, the National Roofing Contractors Association, SMACNA, and as required by other divisions of these specifications.

E. All work associated with the existing roof shall be performed so as to maintain the existing 15 year roof warranty by DuroLast Roofing, Inc., 525 Morley Drive, Saginaw, MI 48601.

1.13. CONNECTIONS AND ALTERATIONS TO EXISTING WORK

A. Unless otherwise noted on the drawings, where existing mechanical work is removed, pipes, valves, ductwork, etc., shall be removed, including hangers, to a point below finished floors or behind finished walls and capped. Such point shall be far enough behind finished surfaces to allow for installation of normal thickness of required finish material.

B. Where work specified in Division 23 connects to existing equipment, piping, ductwork, etc., Contractor shall perform all necessary alterations, cuttings, fittings, etc., of existing work as may be necessary to make satisfactory connections between new and existing work, and to leave completed work in a finished and workmanlike condition.

C. Where the work specified under Division 23, or under other Divisions, requires relocation of existing equipment, piping, ductwork, etc., Contractor shall perform all work and make necessary changes to existing work as may be required to leave completed work in a finished and workmanlike condition. Where existing insulation is disturbed, replace insulation where removed or damaged equal to existing, in type, thickness, density, finish and thermal resistance (R-value) value.

D. Where the relocation of existing equipment is required for access or the installation of new equipment, the contractor shall temporarily remove and/or relocate and re-install as required to leave the existing and new work in a finished and workman like condition.

1.14. DEMOLITION

A. Unless otherwise noted all existing equipment, piping, ductwork, etc., shall remain.

B. Where existing equipment is indicated to be removed, all associated piping, conduit, power, controls, insulation, hangers, ductwork, supports and housekeeping pads, etc., patch, paint and repair walls/roof/floor to match existing and/or new finishes.

C. Provide necessary piping, valves, traps, temporary feeds, drips, etc., as required. Drain and refill piping systems as often as necessary to accommodate phasing and to minimize time lengths of outages.

D. The Contractor shall be responsible for visiting the site and determining the existing conditions in which the work is to be performed.

E. Where any abandoned pipes in existing floors, walls, pipe tunnels, ceilings, etc., conflict with new work, remove abandoned pipes as necessary to accommodate new work.

F. The location of all existing equipment, piping, ductwork, etc., indicated is approximate only and shall be checked and verified. Install all new mechanical/plumbing/fire protection work to connect to or clear existing work as applicable.

G. Maintain egress at all times. Coordinate egress requirements with the State Fire Marshal, the Owner and the authorities having jurisdiction.

H. Where required to maintain the existing systems in operation, temporarily backfeed existing systems from new equipment. Contractor shall temporarily extend existing piping systems to new piping systems with the appropriate shut-off valves.

I. At completion of project all temporary piping, valves, controls, etc., shall be removed in their entirely.

J. Existing piping, equipment, ductwork, materials, etc., not required for re-use or re-installation in this project, shall be removed from the project site.

K. Deliver to the Owner, on the premises where directed, existing equipment and materials which are removed and which are desired by the Owner or are indicated to remain the property of the Owner.

L. All other materials and equipment which are removed shall become property of the Contractor and shall be promptly removed, from the premises, and disposed of by the Contractor, in an approved manner. Contractor shall be responsible for proper disposal of all removed equipment containing refrigerants. Contractor shall include in his bid all cost associated with the evacuation, removal and disposal of all existing equipment containing refrigerants in accordance with EPA and Health Department requirements.

M. Where piping and/or ductwork is removed, remove all pipe or ductwork hangers which were supporting the removed piping or ductwork. Patch the remaining penetration voids with like materials and paint to match existing construction.

N. Where required, provide and coordinate removal and re-installation of existing equipment. Take care to protect materials and equipment indicated for reuse. Contractor shall repair or replace items which are damaged. Contractor shall have Owner's representative present to confirm condition of equipment prior to demolition.

O. Before demolition begins, and in the presence of the Owners representative, test and note all deficiencies in all existing systems affected by demolition but not completely removed by demolition. Provide a copy of the list of system deficiencies to the Owner and the Engineer. Videotape existing conditions in each space prior to beginning demolition work.

P. The Owner shall have the first right of refusal for all fixtures, devices and equipment removed by the Contractor.

Q. All devices and equipment designated by the Owner to remain the property of the Owner shall be moved and stored by the Contractor at a location on site as designated by the Owner. It shall be the Contractor's responsibility to store all devices and equipment in a safe manner to prevent damage while stored.

R. All existing equipment refused by the Owner shall become the property of the Contractor and shall be removed from the site by the Contractor in a timely manner and disposed of in a legal manner.

S. Work Abandoned in Place: Cut and remove underground pipe a minimum of 2 inches beyond face of adjacent construction. Cap and patch surface to match existing finish.

T. Temporary Disconnection: Remove, store, clean, reinstall, reconnect, and make operational equipment indicated for relocation.

U. Terminate services and utilities in accordance with local laws, ordinances, rules and regulations.

V. Where hydronic system piping and equipment is removed, Contractor shall be responsible for proper disposal of all contained fluids containing glycol (ethylene or propylene), hazardous waste and water treatment chemicals. Contractor shall include in his bid all associated costs with the removal, testing, and disposal of hydronic system fluid in accordance with EPA, Health Department, and the Local Authority Having Jurisdiction.

1.15. DRIVE GUARDS

A. Provide safety guards on all exposed belt drives, motor couplings, and other rotating machinery. Provide fully enclosed guards where machinery is exposed from more than one direction.

B. When available, guards shall be factory fabricated and furnished with the equipment. Otherwise fabricate guards of heavy gauge steel, rigidly braced, removable, and finish to match equipment served. Provide openings for tachometers. Guards shall meet local, State and O.S.H.A. requirements.

1.16. VIBRATION ISOLATION

A. Furnish and install vibration isolators, flexible connections, supports, anchors and/or foundations required to prevent transmission of vibration from equipment, piping or ductwork to building structure. See Division 23 Section, “Vibration Control for HVAC, Plumbing and Fire Protection Equipment”.

1.17. DEFINITIONS

A. *Approve* - to permit use of material, equipment or methods conditional upon compliance with contract documents requirements.

B. *Furnish and install* or *provide* means to supply, erect, install, and connect to complete for readiness for regular operation, the particular work referred to.

C. *Contractor* means the mechanical contractor and any of his subcontractors, vendors, suppliers, or fabricators.

D. *Piping* includes pipe, all fittings, valves, hangers, insulation, identification, and other accessories relative to such piping.

E. *Ductwork* includes duct material, fittings, hangers, insulation, sealant, identification and other accessories

F. *Concealed* means hidden from sight in chases, formed spaces, shafts, hung ceilings, embedded in construction or in crawl space.

G. *Exposed* means not installed underground or *concealed* as defined above.

H. *Invert Elevation* means the elevation of the inside bottom of pipe.

I. *Finished Spaces*: Spaces other than mechanical and electrical equipment rooms, furred spaces, pipe and duct shafts, unheated spaces immediately below roof, spaces above ceiling, unexcavated spaces, crawl spaces, and tunnels.

J. *Review* - limited observation or checking to ascertain general conformance with design concept of the work and with information given in contract documents. Such action does not constitute a waiver or alteration of the contract requirements.

K. *Building Line:* Exterior wall of building.

1.18. MINIMUM EFFICIENCY REQUIREMENTS

A. All heating, ventilating, and air conditioning equipment shall be manufactured to provide the minimum efficiency requirements as specified in ASHRAE Standard 90.1, latest edition.

B. All piping, ductwork, and equipment insulation shall comply with ASHRAE Standard 90.1, latest edition.

C. All mechanical devices, controls, accessories, and components shall be manufactured to provide the minimum efficiency requirements as specified in ASHRAE Standard 90.1, latest edition.

1.19. SYSTEM INTEGRATION

A. For all HVAC equipment specified to be provided with packaged controls and interfaced with the automatic temperature control system, provide system integration between the equipment manufacturer and the automatic temperature control subcontractor.

B. HVAC equipment submittals requiring system integration as defined above must identify all required system integration points.

C. HVAC equipment manufacturers must coordinate with ATC subcontractor regarding system integration prior to submitting on the equipment.

D. A system integration meeting must be arranged by the Mechanical Contractor and include, but not be limited to the systems integrator for the HVAC equipment manufacturer and the ATC Subcontractor. This portion of systems integration must occur prior to HVAC equipment being delivered to the project.

E. Once the HVAC equipment is on site, a second systems integration meeting must be arranged by the Mechanical Contractor to coordinate the packaged controls with the ATC system. The HVAC equipment manufacturer's representative familiar with system integration and the ATC subcontractor familiar with programming must be present.

F. A final system integrations meeting shall occur once all equipment is in place and ready for operation. The Mechanical Contractor, the HVAC equipment systems' integrator, and the ATC Subcontractor shall meet on site to jointly program, schedule, verify points, interlock devices, and fully set up all systems integration components.

G. All systems integration coordination, programming, and graphics must be completed prior to requesting commissioning and/or inspections by the Engineer of Record.

PART 2. ELECTRICAL REQUIREMENTS

2.1. GENERAL MOTOR AND ELECTRICAL REQUIREMENTS

A. Furnish and install control and interlock wiring for the equipment furnished. In general, power wiring and motor starting equipment will be provided under Division 26. Carefully review the contract documents to coordinate the electrical work under Division 23 with the work under Division 26. Where the electrical requirements of the equipment furnished differ from the provisions made under Division 26, make the necessary allowances under Division 23. Where no electrical provisions are made under Division 26, include all necessary electrical work under Division 23.

B. All electrical work performed under Division 23 shall conform to the applicable requirements of Division 26 and conforming to the National Electrical Code. All wiring, conduit, etc., installed in ceiling plenums must be plenum rated per NFPA and the International Building Code.

C. Provide wiring diagrams with electrical characteristics and connection requirements.

D. Test Reports: Indicate test results verifying nominal efficiency and power factor for three phase motors larger than five (5) horsepower.

E. Protect motors stored on site from weather and moisture by maintaining factory covers and suitable weatherproof covering. For extended outdoor storage, remove motors from equipment and store separately.

F. All motors shall be furnished with visible nameplate indicating motor horsepower, voltage, phase, cycles, RPM, full load amps, locked rotor amps, frame size, manufacturer's name and model number, service factor, power factor and efficiency.

G. Motors located in exterior locations, wet air streams, air cooled condensers, and outdoors shall be totally enclosed weatherproof epoxy-treated type.

H. Nominal efficiency and power factor shall be as scheduled at full load and rated voltage when tested in accordance with IEEE 112.

I. Brake horsepower load requirement at specified duty shall not exceed 85 percent of nameplate horsepower times NEMA service factor for motors with 1.0 and 1.15 service

factors.

J. All single phase motors shall be provided with thermal protection: Internal protection shall automatically open power supply circuit to motor when winding temperature exceeds a safe value calibrated to temperature ratings of motor insulation. Thermal protection device shall automatically reset when motor temperature returns to normal range, unless otherwise indicated.

2.2. MOTORS AND CONTROLS

A. Motors and controls shall conform to the latest requirements of IEEE, NEMA, NFPA-70 and shall be UL listed. Motor sizes are specified with the driven equipment. Motor starting and control equipment is specified either with the motor which is controlled or in an electrical specification section. The Contractor is advised to consult all specification sections to determine responsibility for motors and controls.

B. Motors shall be designed, built and tested in accordance with the latest revision of NEMA Standard MG l.

C. Motors used with variable-frequency controllers shall have ratings, characteristics, and features coordinated with and approved by the variable frequency controller (drive) manufacturer. As a minimum the following shall apply to variable frequency controlled motors:

1. Motors shall be manufactured to withstand peak voltages of 1600 volts with .1 microsecond rise time per NEMA MG-1.

2. Critical vibration frequencies of motor shall not be within operating range of variable frequency controller output.

3. Temperature rise: Match rating for Class B insulation.

4. Insulation: Class F.

5. Thermal Protection: Conform to MG1 requirements for thermally protected motors.

D. Motors shall be suitable for use under the conditions and with the equipment to which applied, and designed for operation on the electrical systems specified or indicated.

1. Motor capacities shall be such that the horsepower rating and the rated full-load current will not be exceeded while operating under the specified operating conditions. Under no condition shall the motor current exceed that indicated on the nameplates.

2. Motor sizes noted in the individual equipment specifications are minimum requirements only. It is the responsibility of the equipment manufacturers and of the Contractor to furnish motors, electrical circuits and equipment of ample capacity to operate the equipment without overloading, exceeding the rated full-load current, or overheating at full-load capacity under the most severe operating service of this equipment. Motors shall have sufficient torque to accelerate the

total WR^2 of the driven equipment to operating speed.

3. Motors shall be continuous duty type and shall operate quietly at all speeds and loads.

4. Motors shall be designed for operation on 60 hertz power service. Unless otherwise specified or shown, motors less than ½ horsepower shall be single phase, and motors ½ horsepower and larger shall be 3 phase unless otherwise noted.

5. Motors shall be mounted so that the motor can be removed without removing the entire driven unit.

E. Single phase motors, smaller than 1/20 horsepower shall be ball or sleeve bearing; drip-proof, totally enclosed or explosion proof, as specified; 120 volts; permanent-split capacitor or shaded pole type. These motors shall not be used for general power purposes, and shall only be provided as built-in components of such mechanical equipment as fans, unit heaters, humidifiers and damper controllers. When approved by the Engineer, deviations from the specifications will be permitted as follows:

1. Open motors may be installed as part of an assembly where enclosure within a cabinet provides protection against moisture.

2. Motors used in conjunction with low voltage control systems may have a voltage rating less than 115 volts.

F. Single phase motors, greater than 1/20 horsepower and less than ½ horsepower shall be ball bearing; drip-proof, totally enclosed or explosion proof, as specified, with Class A or B insulation, as standard with the motor manufacturer; 115 or 120/208/240 volts as required; capacitor start-induction run, permanent split capacitor, or repulsion start-induction run type with minimum efficiency of 70 percent and a minimum full load power of 77 percent.

G. Except as otherwise specified in the various specification sections, 3 phase motors 60 horsepower and smaller shall be NEMA design B squirrel cage induction type meeting the requirements of this paragraph. Motors shall be drip-proof, totally enclosed or explosion proof, as specified or indicated. Insulation shall be Class B or F, at 40 degrees C ambient temperature. Drip-proof motors shall have a 1.15 service factor and totally enclosed and explosion proof motors shall have a service factor of 1.00 or higher. Motors specified for operation at 480, 240, and 208 volts shall be nameplated 460, 230, 200 volts, respectively. Efficiencies and percent power factor at full load for three phase motors shall be not less than the values listed below for premium efficiency motors:

MOTOR NAMEPLATE	MINIMUM PERCENT EFFICIENCY AT NOMINAL SPEED AND RATED LOAD	MINIMUM PERCENT POWER FACTOR
1HP and above to	85.5 percent	84 percent

MOTOR NAMEPLATE	MINIMUM PERCENT EFFICIENCY AT NOMINAL SPEED AND RATED LOAD	MINIMUM PERCENT POWER FACTOR
1-½ HP	86.5 percent	85 percent
2HP	86.5 percent	85 percent
3HP	89.5 percent	86 percent
5HP	89.5 percent	87 percent
7½ HP	91 percent	86 percent
10HP	91.7 percent	85 percent
15HP	93.0 percent	85 percent
20HP	93.0 percent	86 percent
25HP	93.6 percent	85 percent
50HP and above	94.5 percent	88 percent
60 HP	95.0 percent	90 percent
75HP	95.0 percent	90 percent
100 HP	95.4 percent	90 percent
125 HP	95.8 percent	95 percent
150 HP and above	96.0 percent	95 percent

H. Three phase motors ½ HP or greater shall be the Duty Master XE by Reliance Electric Company, Super-E Premium Efficiency of Baldor Motor and Drives, E-plus Efficient Standard Duty Motor of the Electric Motor Division of Gould, Inc., the MAC II High Efficiency motor of Westinghouse Electric Corp., the equivalent product of General Electric, or approved equal.

I. For motors serving equipment being controlled by a variable speed drive, motor shall be premium efficiency inverter duty rated.

J. Motor frames shall be NEMA Standard T-Frames of steel, aluminum, or cast iron with end brackets of cast-iron or aluminum with steel inserts.

K. Control of each motor shall be manual or automatic as specified for each in the various mechanical sections. In general, and unless otherwise specified for a particular item in the various mechanical sections of the specifications, motor starters and controls shall be specified and provided under the various electrical sections of these specifications.

2.3. MOTOR INSTALLATION

A. Install in accordance with manufacturer's instructions.

B. Install securely on firm foundation. Mount ball bearing motors to support shaft regardless of shaft position.

C. Check line voltage and phase and ensure agreement with nameplate. Check that proper thermal overloads have been installed prior to operating motors.

D. Use adjustable motor mounting bases for belt-driven motors.

E. Align pulleys and install belts.

F. Tension belts according to manufacturer's written instructions.

2.4. WIRING DIAGRAMS

A. The Contractor is responsible for obtaining and submitting wiring diagrams for all major items of equipment.

B. Wiring diagrams shall be provided with shop drawings for all equipment requiring electric power.

C. Provide wiring diagrams for all major mechanical items of equipment to electrical contractor and ATC subcontractor for coordination.

2.5. VARIABLE FREQUENCY DRIVE MOTOR BEARING PROTECTIVE RINGS:

A. For all motors driven by a variable frequency PWM drive include a maintenance free, circumferential, conductive micro fiber shaft grounding ring to discharge shaft currents. Grounding rings shall be manufactured by AEGIS SGR or approved equal.

B. Furnish units with one year warranty.

C. Size and select Bearing Protective Rings per the manufacturer requirements based on the motor size, shaft diameter, and shaft shoulder length. For motors with slingers furnish and install NEMA /IEC kit as required.

D. Furnish and apply Colloidal silver shaft coating to all shafts with Bearing Protective Rings to improve shaft voltage discharge capability.

PART 3. EXECUTION

3.1. EQUIPMENT INSTALLATION - COMMON REQUIREMENTS

A. Install equipment to provide maximum possible headroom, if mounting heights are not indicated.

B. Install equipment according to approved submittal data. Portions of the work are shown only in diagrammatic form. Refer conflicts to Engineer.

C. Install equipment level and plumb, parallel and perpendicular to other building systems and components in exposed interior spaces, unless otherwise indicated.

D. Install mechanical equipment to facilitate service, maintenance, and repair or replacement of components. Connect equipment for ease of disconnecting, with minimum interference to other installations. Extend grease fittings to accessible locations.

E. Install equipment giving right of way to piping installed at required slope.

F. Install flexible connectors on equipment side of shutoff valves, horizontally and parallel to equipment shafts if possible.

G. Do not install equipment, ductwork, or piping over electrical gear, electrical panels, motor controllers, and similar electrical equipment. Install equipment, ductwork, and piping to maintain clear space above and in front of all electrical components per the National Electric Code.

3.2. SUPPORTS, HANGERS AND FOUNDATIONS

A. Provide supports, hangers, braces, attachments and foundations required for the work. Support and set the work in a thoroughly substantial and workmanlike manner without placing strains on materials, equipment, or building structure, submit shop drawings for approval. Coordinate all work with the requirements of the structural division.

B. Supports, hangers, braces, and attachments shall be standard manufactured items or fabricated structural steel shapes. All interior hangers shall be galvanized or steel with rust inhibiting paint. For un-insulated copper piping provide copper hanger to prevent contact of dissimilar metals. All exterior hangers shall be constructed of stainless steel utilizing stainless steel rods, nuts, washers, bolts, etc.

3.3. PROVISIONS FOR ACCESS

A. The contractor shall provide access panels and doors for all concealed equipment, valves, strainers, dampers, filters, controls, control devices, damper operators, and other devices requiring maintenance, service, adjustment, balancing or manual operation.

B. Where access doors are necessary, furnish and install manufactured painted steel door assemblies consisting of hinged door, key locks, and frame designed for the particular wall or ceiling construction. Properly locate each door. Door sizes shall be a 12 inches x 12 inches for hand access, 18 inches x 18 inches for shoulder access and 24 inches x 24 inches for full body access where required. Review locations and sizes with Engineer prior to fabrication. Mark each access door within finished spaces with a small color coded and numbered tab. Provide a chart or index for identification. Provide U.L. approved and labeled access doors where installed in fire rated walls or ceilings. Doors shall be Milcor Metal Access Doors as manufactured by Inland-Ryerson, Mifab, or approved equal.

1. Acoustical or Cement Plaster: Style B
2. Hard Finish Plaster: Style K or L
3. Masonry or Dry Wall: Style M

C. Where access is by means of liftout ceiling tiles or panels, mark each ceiling grid using small color-coded and numbered tabs. Provide a chart or index for identification. Place

markers within ceiling grid not on ceiling tiles.

D. Access panels, doors, etc. described herein shall be furnished under the section of specifications providing the particular service and to be turned over to the pertinent trade for installation. Coordinate installation with installing contractor. All access doors shall be painted in baked enamel finish to match ceiling or wall finish.

E. Submit shop drawings indicating the proposed location of all access panels/doors. Access doors in finished spaces shall be coordinated with air devices, lighting and sprinklers to provide a neat and symmetrical appearance.

3.4. PAINTING AND FINISHES

A. Provide protective finishes on all materials and equipment. Use coated or corrosion-resistant materials, hardware and fittings throughout the work. Paint bare, untreated ferrous surfaces with rust-inhibiting paint. All exterior components including supports, hangers, nuts, bolts, washers, vibration isolators, etc. shall be stainless steel.

B. Clean surfaces prior to application of insulation, adhesives, coatings, paint, or other finishes.

C. Provide factory-applied finishes where specified. Unless otherwise indicated factory-applied paints shall be baked enamel with proper pretreatment.

D. Protect all finishes and restore any finishes damaged as a result of work under Division 23 to their original condition.

E. The preceding requirements apply to all work, whether exposed or concealed.

F. Remove all construction marking and writing from exposed equipment, ductwork, piping and building surfaces. Do not paint manufacturer's labels or tags.

G. All exposed ductwork, piping, equipment, etc. shall be painted. Colors shall be as stated in this division or as selected by the Owner and conform to ANSI Standards.

H. All exterior roof mounted ductwork, equipment, piping, breeching, and vents shall be painted to match roof in color as selected by Owner.

I. All exposed ductwork, piping, equipment, etc. in finished spaces shall be painted. Colors shall be as selected by the Owner and conform to ANSI Standards.

J. All exposed ductwork, piping, equipment, etc., in Mechanical Rooms, Boiler Rooms, and Storage where PVC jacketed shall not require painting. Label and identify and color code as specified.

3.5. CLEANING OF SYSTEMS

A. Thoroughly clean systems after satisfactory completion of pressure tests and before permanently connecting fixtures, equipment, traps, strainers, and other accessory items. Blow out and flush piping until interior surfaces are free of foreign matter.

B. Flush piping in re-circulating water systems to remove cutting oil, excess pipe joint compound, solder slag and other foreign materials. Do not use system pumps until after cleaning and flushing has been accomplished to the satisfaction of the Engineer. Employ chemical cleaners, including a non-foaming detergent, not harmful to system components. After cleaning operation, final flushing and refilling, the residual alkalinity shall not exceed 300 parts per million. Submit a certificate of completion to Engineer stating name of service company used.

C. Maintain strainers and dirt pockets in clean condition.

D. Clean fans, ductwork, enclosures, flues, registers, grilles, and diffusers at completion of work.

E. Install filters of equal efficiency to those specified in permanent air systems operated for temporary heating during construction. Replace with clean filters as specified prior to acceptance and after cleaning of system.

F. Pay for labor and materials required to locate and remove obstructions from systems that are clogged with construction refuse after acceptance. Replace and repair work disturbed during removal of obstructions.

G. Leave systems clean, and in complete running order.

H. All HVAC piping/equipment strainers must be pulled and cleaned prior to substantial completion. In addition six (6) months after substantial completion all HVAC piping/equipment strainers must be pulled and cleaned a second time. Document and submit verification of strainer cleaning to Engineer and Owner.

3.6. COLOR SELECTION

A. Color of finishes shall be as selected by the Owner.

B. Submit color of factory-finished equipment for acceptance prior to ordering.

3.7. PROTECTION OF WORK

A. Protect work, material and equipment from weather and construction operations before and after installation. Properly store and handle all materials and equipment.

B. Cover temporary openings in piping, ductwork, and equipment to prevent the entrance of water, dirt, debris, or other foreign matter. Deliver pipes and tubes with factory applied end caps.

C. Cover or otherwise protect all finishes.

D. Replace damaged materials, devices, finishes and equipment.

E. Protect stored pipes and tubes from moisture and dirt. Elevate above grade. Do not exceed structural capacity of floor, where stored inside.

3.8. OPERATION OF EQUIPMENT

A. Clean all systems and equipment prior to initial operation for testing, balancing, or other purposes. Lubricate, adjust, and test all equipment in accordance with manufacturer's instructions. Do not operate equipment unless all proper safety devices or controls are operational. Provide all maintenance and service for equipment that is authorized for operation during construction.

B. Where specified, or otherwise required, provide the services of the manufacturer's factory-trained servicemen or technicians to start up the equipment. Where factory start-up of equipment is not specified, provide field start-up by qualified technician.

C. Submit factory start-up sheets or field start-ups sheets for all equipment prior to the commencement of testing and balancing work. Testing and balancing work shall not commence until start-up reports have been completed, reviewed by Engineer and forwarded to Testing and Balancing Agency.

D. Do not use mechanical systems for temporary services or temporary conditioning during construction, unless approved by Owner in writing. Refer to Division 01 Section "Temporary Facilities and Controls" for temporary heating/cooling during construction.

E. Upon completion of work, clean and restore all equipment to new conditions; replace expendable items such as filters.

3.9. DEMONSTRATION AND TRAINING VIDEO RECORDINGS

A. General: Record demonstration and training video recordings. Record each training session separately.

1. At beginning of each training module, record each chart containing learning objective and lesson outline.

B. Video Recording Format: Provide high-quality color video recordings in format acceptable to Engineer

C. Recording: Mount camera on tripod before starting recording, unless otherwise necessary to show area of demonstration and training. Display continuous running time.

D. Narration: Describe scenes on video recording by audio narration by microphone while video recording is recorded. Include description of items being viewed.

3.10. IDENTIFICATIONS, FLOW DIAGRAMS, ELECTRICAL DIAGRAMS AND OPERATING INSTRUCTIONS

A. Contractor shall submit for approval schematic piping diagrams of each piping system installed in the building. Diagrams shall indicate the location and the identification number of each valve in the particular system. Following approval by all authorities, the diagrams shall be framed, mounted under safety glass and hung in each Mechanical Room where directed. Contractor shall deliver the tracing or sepia from which the diagrams were reproduced to the Owner.

B. All valves shall be plainly tagged. For any bypass valves, install sign indicating valve

position as "Normally Open" or "Normally Closed" as required.

C. All items of equipment, including motor starters, disconnects and ATC panels shall be furnished with white on black plastic permanent identification cards. Lettering shall be a minimum of ¼ inch high. Identification plates shall be secured, affixed to each piece of equipment, starters, disconnects, panels by screw or adhesive (tuff bond #TB2 or as approved equal).

D. Provide six (6) copies of operating and maintenance instructions for all principal items of equipment furnished. This material shall be bound as a volume of the *Record and Information Booklet* as hereinafter specified.

E. All lines piping and ductwork installed under this contract shall be stenciled with *direction of flow* arrows and with stenciled letters naming each pipe and ductwork and service. Refer to Division 23 Section, "HVAC Piping, Fittings, Valves, Etc." and Division 23 Section, "HVAC Air Distribution". Color-code all direction of flow arrows and labels. In finished spaces omit labeling and direction of flow arrows. Paint in color as selected by Owner.

F. Submit list of wording, symbols, letter size, and color coding for mechanical identification. Submit samples of equipment identification cards, piping labels, ductwork labels, and valve tags to Engineer for review prior to installation.

G. Provide at least 8 hours of straight time instruction to the operating personnel. Time of instruction shall be designated by the Owner. Additional instruction time for the automatic temperature control (ATC) system is specified in Division 23 Section, "Instrumentation & Controls of HVAC & Plumbing Systems".

H. Contractor shall demonstrate Sequences of Operation of all equipment in presence of Owner's representative, Engineer, and ATC subcontractor.

3.11. WALL AND FLOOR PENETRATION

A. All penetrations of partitions, ceilings, roofs and floors by ducts, piping or conduit under Division 23 shall be sleeved, sealed, and caulked airtight for sound and air transfer control. Penetrations of mechanical room partitions, ceilings, and floors shall be as specified in Division 23 Section, "Vibration Control for HVAC, Plumbing and Fire Protection Equipment".

B. All penetration of fire rated assemblies shall be sleeved, sealed, caulked and protected to maintain the rating of the wall, roof, or floor. Fire Marshal approved U.L. assemblies shall be utilized. See Division 07 Section, "Fire Protection, HVAC & Plumbing Penetration Firestopping".

C. Where piping extends through exterior walls or below grade, provide waterproof pipe penetration seals, as specified in another division of these specifications.

D. Provide pipe escutcheons and duct flanges for sleeved pipes and ducts in finished areas.

E. Piping sleeves:

1. Galvanized steel pipe, standard weight where pipes are exposed and roofs and concrete and masonry walls. On exterior walls provide anchor flange welded to perimeter.

2. Twenty-two (22) gauge galvanized steel elsewhere.

F. Ductwork sleeves: 20 gauge galvanized steel.

G. Extend all floor sleeves through floor at least 2-inches above finished floor, caulk sleeve the entire depth and furnish and install floor plate.

3.12. RECORD DRAWINGS

A. Upon completion of the mechanical installations, the Contractor shall deliver to the Engineer one complete set of prints of the mechanical contract drawings which shall be legibly marked in red pencil to show all changes and departures of the installation as compared with the original design. They shall be suitable for use in preparation of Record Drawings.

B. Contractor shall incorporate all sketches, addendums, value engineering, change orders, etc., into record drawings prior to delivering to Engineer

3.13. WARRANTY

A. Contractor's attention is directed to warranty obligations contained in the GENERAL CONDITIONS.

B. The above shall not in any way void or abrogate equipment manufacturer's guarantee or warranty. Certificates of equipment manufacturer’s warranties shall be included in the operations and maintenance manuals.

C. The Contractor guarantees for a two year period from the time of final acceptance by the Owner.

1. That the work contains no faulty or imperfect material or equipment or any imperfect, careless, or unskilled workmanship.

2. That all work, equipment, machines, devices, etc. shall be adequate for the use to which they are intended, and shall operate with ordinary care and attention in a satisfactory and efficient manner.

3. That the contractor will re-execute, correct, repair, or remove and replace with proper work, without cost to the Owner, any work found to be deficient. The contractor shall also make good all damages caused to their work or materials in the process of complying with this section.

4. That the entire work shall be water-tight and leak-proof.

3.14. LUBRICATION

A. All bearings, motors, and all equipment requiring lubrication shall be provided with

accessible fittings for same. Before turning over the equipment to the Owner, the Contractor shall fully lubricate each item of equipment, shall provide one year's supply of lubricant for each, and shall provide Owner with complete written lubricating instructions, together with diagram locating the points requiring lubrication. Include this information in the Record and Information Booklet.

B. In general, all motors and equipment shall be provided with grease lubricated roller or ball bearings with Alemite or equal accessible or extended grease fittings and drain plugs.

3.15. OPERATIONS AND MAINTENANCE MANUALS

A. The Contractor shall have prepared six (6) hardcopies and one (1) electronic copy of the *Operations and Maintenance Manuals* and deliver these copies of the booklet to the Owner. The booklet shall be as specified herein. The booklet must be approved and will not be accepted as final until so stamped.

B. The booklet shall be bound in a three-ring loose-leaf binder similar to National No. 3881 with the following title lettered on the front: *Operations and Maintenance Manuals – DTCC Owens Campus Carter Center Fume Hood Ventilation System - HVAC.* No sheets larger than 8-1/2 inches x 11 inches shall be used, except sheets that are neatly folded to 8-1/2 inches x 11 inches and used as a pull-out. Provide divider tabs and table of contents for organizing and separating information.

C. Provide the following data in the booklet:

1. As first entry, an approved letter indicating the starting/ending time of Contractor’s warranty period.
2. Maintenance operation and lubrication instructions on each piece of equipment furnished.
3. Complete catalog data on each piece of heating and air conditioning equipment furnished including approved shop drawing.
4. Manufacturer's extended limited warranties on equipment including but not limited to variable frequency drives.
5. Chart form indicating frequency and type of routine maintenance for all mechanical equipment. The chart shall also indicate model number of equipment, location and service.
6. Provide sales and authorized service representatives names, address, and phone numbers of all equipment and subcontractors.
7. Provide supplier and subcontractor’s names, address, and phone number.
8. Catalog data of all equipment, valves, etc. shall include wiring diagrams, parts list and assembly drawing.
9. Provide and install in locations as directed by the Owner, valve charts including valve tag number, valve type, valve model number, valve manufacturer, style, service and location. Each valve chart shall be enclosed in a durable polymer based frame with a cover safety glass.
10. Copy of the approved balancing report including duct leakage data.
11. Room design and actual differential pressure measurements.
12. ATC systems including as-built ATC drawings of systems including internal of all panels.
13. Access panel charts with index illustrating the location and purpose of access panels.

14. Approved HVAC and Electrical Certificates.
15. Start-up reports for equipment.
16. Provide and install in locations as directed by Owner, filter charts, including filter type, size, model number, manufacturer, quantity and size for each filter utilized on the project. Filter charts shall be enclosed in a durable polymer based frame with a cover safety glass.
17. Insert color graphic with embedded parameters for ATC system into record and information booklet.
18. Documentation of strainer pulling and cleaning.

D. Submit Record and Information Booklets prior to the anticipated date of substantial completion for Engineer review and approval. Substantial completion requires that Record and Information booklets be reviewed and approved.

3.16. INSTALLATION AND COORDINATION DRAWINGS

A. Prepare, submit, and use composite installation and coordination drawings to assure proper coordination and installation of work. Drawings shall include, but not be limited, to the following:

1. Complete Ductwork, Plumbing, Sprinkler and HVAC Piping Drawings showing coordination with lights, electrical equipment, HVAC equipment and structural amenities.

B. Draw plans to a scale not less than 3/8-inch equals one foot. Include plans, sections, and elevations of proposed work, showing all equipment, piping and ductwork in areas involved. Fully dimension all work including lighting fixtures, conduits, pullboxes, panelboards, and other electrical work, walls, doors, ceilings, columns, beams, joists and other architectural and structural work.

C. Identify all equipment and devices on wiring diagrams and schematics. Where field connections are shown to factory-wired terminals, include manufacturer's literature showing internal wiring.

D. Refer to Division 01 Section “Project Management and Coordination” for additional requirements related to coordination drawings.

3.17. PIPING SYSTEMS TESTING

A. The entire new HVAC piping systems shall be tested hydrostatically before insulation covering is applied and proven tight under the following gauge pressures for a duration of four (4) hours. Testing to be witnessed by Owner's representative and documented in writing.

SYSTEM	**TEST PRESSURE**
Heating and Chilled Water Supply & Return Piping	100 psi

B. Ductwork pressure testing shall be as specified in another division of these specifications.

C. Testing and acceptance thereof shall be in accordance with local requirements and shall

meet approval of authority having jurisdiction. Submit certificates and approved permits and insert one (1) copy in the *Operations and Maintenance Manuals*.

D. Refrigerant piping shall be tested utilizing nitrogen per equipment manufacturer's requirements.

3.18. EQUIPMENT BY OTHERS

A. This Contractor shall make all system connections required to equipment furnished and installed under other divisions or furnished by the Owner. Connections shall be complete in all respects to render this equipment functional to its fullest intent.

B. It shall be the responsibility of the supplier of this equipment to furnish complete instructions for connections. Failure to do so will not relieve this contractor of any responsibility for improper equipment operation.

3.19. ADDITIONAL BELTS

A. One complete set of additional belts shall be turned over to the owner upon final acceptance of the building by the owner. Provide correspondence to the Engineer (copy) documenting that additional belts have been turned over to Owner.

B. All belts shall be tagged and identified for equipment served. Furnish filters in protection wrap.

3.20. STRAINER CLEANING

A. All equipment strainers must be pulled and cleaned at substantial completion. Document in writing and via digital photographs that all strainers have been pulled and cleaned.

B. One year after project substantial completion all strainers shall be pulled again and cleaned. Document in writing and via digital photographs that all strainers were pulled and clean at the one year after project substantial completion data.

C. Insert documentation that the strainers have been pulled and cleaned in the Record and Information Books.

D. Re-purge hydronic systems of all air after strainers are pulled and cleaned.

3.21. OUTAGES

A. Provide a minimum of fourteen (14) days notice to schedule outages. The Contractor shall include in their bid outages and/or work in occupied areas to occur on weekends, holidays, or at night. Coordinate and get approval of all outages with the Owner.

B. Submit *Outage Request form*, attached at end of this Section, to Owner for approval.

END OF SECTION

OUTAGE REQUEST

DATE APPLIED: _____ BY: _____

DATE FOR OUTAGE: _____ FIRM: _____

START OUTAGE-TIME: _____ DATE: _____

END OUTAGE -- TIME: _____ DATE: _____

AREAS AND ROOMS: _____

FLOOR(S): _____

AREA(S): _____

ROOM(S): _____

WORK TO BE PERFORMED: _____

SYSTEM(S): _____

REQUEST APPROVED BY: _____

(FOREMAN OR OTHER PERSON IN CHARGE)

(FOR OWNER'S USE ONLY):

APPROVED: _____

YES _____ NO ____ BY: _____ DATE: _____

DATE/TIME-AS REQUESTED: _____ OTHER : _____

OWNER'S PRESENCE REQUIRED: _____

YES: ____ NO: ____ NAME: _____

POINT OF CONTACT: _____ PHONE: _____

DIVISION 23 SECTION 230505
HVAC PIPING, FITTINGS AND VALVES
TABLE OF CONTENTS

PART 1. GENERAL

1.1. SUMMARY
1.2. SYSTEM DESCRIPTION CONDITIONS
1.3. QUALITY ASSURANCE
1.4. DELIVERY, STORAGE AND HANDLING

PART 2. PRODUCTS

2.1. PIPE MATERIALS
2.2. PIPE HANGERS, ANCHORS, GUIDES AND SADDLES
2.3. VALVES
2.4. AUTOMATIC FLOW CONTROL VALVES
2.5. STRAINERS
2.6. UNION, FLANGES, AND COUPLINGS
2.7. MANUAL AIR VENTS
2.8. AUTOMATIC AIR VENTS
2.9. THERMOMETERS
2.10. PRESSURE GAUGES
2.11. FLOW METERS
2.12. PIPING SPECIALITIES
2.13. ESCUTCHEONS
2.14. DIELECTRIC CONNECTIONS
2.15. SLEEVES
2.16. WATER PROOF PIPE PENETRATION SEALS
2.17. TEST PLUGS

PART 3. EXECUTION

3.1. GENERAL PIPING INSTALLATION REQUIREMENTS
3.2. THERMOMETER AND PRESSURE GAUGE INSTALLATION REQUIREMENTS
3.3. VALVE INSTALLATION REQUIREMENTS
3.4. AUTOFLOW CONTROL VALVE INSTALLATION
3.5. PIPE JOINTS INSTALLATION REQUIREMENTS
3.6. HANGERS, SUPPORTS, ANCHORS, GUIDES INSTALLATION REQUIREMENTS
3.7. AIR VENTING INSTALLATION REQUIREMENTS
3.8. EXPANSION LOOPS, AND SWING CONNECTION INSTALLATION REQUIREMENTS
3.9. PIPING IDENTIFICATION INSTALLATION REQUIREMENTS
3.10. VALVE IDENTIFICATION REQUIREMENTS
3.11. CLEANING PIPING AND EQUIPMENT

SECTION 230505 - HVAC PIPING, FITTINGS AND VALVES

PART 1. GENERAL

1.1. SUMMARY

A. The conditions of the contract and other general requirements apply to the work specified in this section. All work under this section shall also be subject to the requirements of Division 23 Section, *Common Work Results for HVAC* and Division 01, *General Requirements*.

B. Drawings and general provisions of the Contract, including General and Supplementary Conditions and Division 01 Specification Sections, apply to this Section.

1.2. SYSTEM DESCRIPTION CONDITIONS

A. Provide all labor and materials necessary to furnish and install all piping systems on this project as herein specified and/or shown on the drawings. Final connections to equipment furnished in other sections of the specifications shall be included under this section.

B. All piping and insulation installed in ceiling plenums must be plenum rated and comply with NFPA and International Building Code (IBC).

C. Where more than one piping system material is specified, ensure system components are compatible and joined to ensure the integrity of the system is not jeopardized. Provide necessary joining fittings. Ensure flanges, union, and couplings for servicing are consistently provided.

D. Use unions, flanges, and couplings downstream of valves and at equipment or apparatus connections. Do not use direct welded or threaded connections to valves, equipment or other apparatus.

E. Use non-conducting dielectric connections whenever jointing dissimilar metals in open systems.

F. Provide pipe hangers and supports in accordance with ASTM B31.9 and MSS SP69 unless indicated otherwise.

G. Use spring loaded "silent" check valves on discharge of all pumps.

H. Use 3/4 inch (20 mm) ball valves with cap and chain for drains at main shut-off valves, low points of piping, bases of vertical risers, and at equipment. Pipe to nearest floor drain.

I. At all runout piping serving equipment, use swing joints with elbows to prevent excessive movement of piping due to expansion.

1.3. QUALITY ASSURANCE

A. Valves: Manufacturer's name and pressure rating marked on valve body.

B. Welding Materials and Procedures: Conform to ASME Code and applicable state labor regulation. Provide certificate of compliance from authority having jurisdiction indicating

approval of welders.

C. Welders Certification: In accordance with ASME Section 9.

D. All grooved joint couplings, fittings, valves, and specialties shall be the products of a single manufacturer. Grooving tools shall be of the same manufacturer as the grooved components.

1. All castings used for coupling housings, fittings, and valve bodies shall be date stamped for quality assurance and traceability.

E. Maintain one copy of each document on site.

1.4. DELIVERY, STORAGE AND HANDLING

A. Deliver, store, protect and handle products to site under as hereinbefore specified.

B. Accept valves on site in shipping containers with labeling in place. Inspect for damage.

C. Provide temporary protective coating on cast iron and steel valves.

D. Provide temporary end caps and closures on piping and fittings. Maintain in place until installation.

E. Protect piping systems from entry of foreign materials by temporary covers, completing sections of the work, and isolating parts of completed systems.

PART 2. PRODUCTS

2.1. PIPE MATERIALS

A. All materials, unless otherwise specified, shall be new and of the best quality of their respective kinds, and shall conform to the requirements and ordinances of local, state and insurance authorities having jurisdiction.

1. Heating & Chilled Water Supply & Return Piping (Inside of Building):

a). Pipe: Schedule 40 Black steel pipe, ASTM A53
1-1/2 inch and smaller - Type F, ASTM A53 steel (CW) with threaded joints

2 inch and larger - Grade B, Type E, ASTM A53 steel (ERW) with welded, flanged or grooved joints.

b). Fittings & Joints: 2-1/2 inches & larger, schedule 40 wrought steel ASTM A234 Grade WPB or Std. B16.9 long radius welding; factory-fabricated from ASTM A53 pipe; or ASTM A536 ductile iron; 2 inches & smaller 125 lb. std. cast iron screwed, ASTM Standard B16.4; or Vic-Press precision, cold drawn, stainless steel with elastomer O-ring seals. Joints shall be threaded or AWS D1.1 welded. Victaulic or approved equal grooved joints shall be acceptable.

c). Flanges: Wrought steel Class 150 welding neck. ASTM Standard B16.5.

d). Grooved Joint Couplings: MI or Two ductile iron housings, pressure responsive elastomer gasket, and ASTM A449 zinc electroplated steel bolts and nuts. Couplings shall comply with ASTM F1476 Standard Specification for the Performance of Gasketed Mechanical Couplings for Use in Piping Applications.

i. Rigid Type: Coupling housings shall be cast with offsetting, angle-pattern bolt pads to provide joint rigidity and support and hanging in accordance with ASNI B31.1 and B31.9.

a. Victaulic Style 107H, Installation-Ready or approved equal, for direct stab installation without field disassembly, with grade EHP gasket, suitable for water service to +250 degrees F.
b. Victaulic Style 07 "Zero-Flex" or approved equal.

ii. Flexible Type: For use in locations where vibration attenuation and stress relief are required, and for the elimination of flexible connectors. Victaulic Installation-Ready Style 177 or Style 77, or approved equal.
iii. 14" and Larger: AGS Series, with lead-in chamfer on housing key and wide width FlushSeal gasket. Victaulic Style W07 (rigid) and Style W77 (flexible), or approved equal.
iv. Flange adapters shall be suitable for direct connection to ANSI Class 125 or 150 flanged components. Victaulic Style 741/W741, or approved equal.
v. Rolled form grooves only. Cut grooves are prohibited.
vi. Verify gasket compatibility on Chemical Treatment piping.

e). Gate Valves: 2-1/2 inches & larger - IBBM, 150 lb. OS&Y grooved end or flanged; 2 inches & smaller - 150 lb. Bronze body bronze trim. Basis of Design: Victaulic Series 771V or approved equal.

For valves 4 inch and larger located in mechanical equipment spaces 10 feet-0 inch or greater above finished floor, valve shall have chain wheel operators with chains extending to within 6 feet-0 inch above finished floor. Chain wheels and guides shall be galvanized.

f). Ball Valves: Shut-off valves 2 inches and smaller shall be ball valves. Ball valves shall be 150 lbs, brass or bronze body, standard port, 2 piece body, TFE seats with bronze trim. Ball valves shall be VicPress end, threaded end or solder end as required to accommodate piping. Ball valves shall be as manufactured by Victaulic, Conbraco, Crane, Apollo, Nibco, Watts or engineer approved equal.

g). Globe Valves: 2-1/2 inches & larger – IBBM 125 lb.std. flanged, with No. 1 disc; 2 inches & smaller - bronze 150 lb.std. screw ends, with #1 disc.

h). Check Valves: 2-1/2 inches & larger – IBBM or stainless steel trim, 125 lb.std. grooved end or flanged spring-assisted swing check suitable for vertical or horizontal installation, with metal disc; 2 inch & smaller - 125 lb. std. screwed. Provide "silent" spring loaded check valves at all pump discharges. Victaulic Series 716/W715 or approved equal.

i). Balancing Valves: Victaulic Series 377/365, DeZurik Series 100, Fig. 118 or approved equal, ductile iron or cast iron construction, stainless steel bearings, nickel seats (3 inches and larger) non-lubricated, eccentric plug with EPDM, chlorobutyl rubber or Bunz-N resilient faced plugs suitable for 230 degrees F, semi-steel screwed with fig. 159, removable lever and open. nut for valves 3 inches and smaller. All valves shall have adjustable memory stop.

j). Butterfly Valves: Victaulic Vic300 MasterSeal/ AGS-Vic300, DeZurik, high performance or Keystone K-Loc, type with infinite position lever (for 3-inches and smaller) and pressure-responsive seat or double seat type and memory stop. Provide gear operator on valves 4-inches and larger.

i. Valve stem shall be stainless steel, and shall be offset from the disc centerline to provide complete 360 degree circumferential seating.

ii. Valve shall be rated to +250 deg F in sizes through 12-inches.

iii. Seat shall be elastomer, of a grade suitable for the intended service. The seat shall be pressure responsive in sizes through 12 inches.

k). Combination Shut-off/Balancing Valves:

Victaulic/ TA Hydronics, Taco Circuit Setter, Bell & Gossett Circuit Setter Plus, Flowset Accuset, Gerand, or as approved equal, 2-inch-3-inch 300 lb. rated Ametal (copper-alloy) body globe type or ball valve with bronze body/brass ball construction with glass and carbon filled TFE seats, in-line flow meter and balancing and shut-off valve with built in ball valve for flow adjustment. Valve shall have memory stop, calibrated nameplate, Schrader valve connections and preformed molded insulation. Valves shall be leaktight at full rated working pressure. Balance valve size shall be selected based on manufacturer's acceptable flow range and design flow rate. Pressure drop through combination shut off balance valves shall not exceed 5 feet of head at design flow rate.

Coil-Hook-up Connections: Victaulic Koil-Kits Series 799 or 79V or approved equal may be used at coil connections. The kit shall include a autoflow balancing valve, Series 78Y Strainer-Ball, Series 78U Union-Port fitting, with Series 78T ball valve and required coil hoses. A Style 793 and/or 794 differential pressure controller shall be provided as required. A meter shall be provided by the valve manufacturer that shall remain with the building owner after commissioning.

l). Extended Valve Stems: Provide and install round collar type extended

valve stems on all valves installed in insulated piping. Valve stem and collar shall be selected to suit insulation thickness and maintain valve handles outside of insulation.

m). Alternate:

i. At contractors option all HVAC water supply and return lines may be copper type *L* (ASTM Std. B88) with wrought copper fittings (ASTM Std. B 16.22) with brazed or 95-5 silver solder joints lead and antimony based solders are prohibited and all bronze valves may be used on piping 2 inches and less in size.

ii. At Contractors option, Pro Press with mechanical fittings may be utilized.

B. Steel pipe shall be similar and equal to National Tube Company, Grinnell, Republic, or Bethlehem black or zinc-coated (galvanized) as hereinafter specified. Pipe shall be free from all defects which may affect the durability for the intended use. Each length of pipe shall be stamped with the manufacturer's name.

C. Copper pipe shall be Revere, Anaconda or Chase with approved solder fittings.

D. Welding fittings for steel pipe shall meet the requirements of ASTM Standard A-23 and shall be standard catalog products. Fittings fabricated by metering and notching pipe will not be accepted.

2.2. PIPE HANGERS ANCHORS, GUIDES, AND SADDLES

A. All hangers for metallic piping shall be adjustable, wrought clevis type, or adjustable malleable split ring swivel type, having rods with machine threads. Hangers shall be Grinnell Company's Figure 260 for pipe ¾-inch and larger, and Figure 65 for pipe 2-inches and smaller, or approved equal. Adjustable pipe stanchion with U-bolt shall be Grinnell Company's Figure 191. Pipe roller supports shall be Grinnell's Figure 181 or Figure 271. Exterior pipe hangers shall be galvanized or stainless steel construction. For copper piping in direct contact with the hanger, hanger construction shall be copper coated to prevent contact of dissimilar metals similar to Grinnell's Figure CT-65. Hanger spacing and rod sizes for steel and copper pipe shall not be less than the following:

NOMINAL PIPE SIZE IN	STD. STEEL PIPE	MAXIMUM SPAN FT. COPPER TUBE	MINIMUM ROD DIAMETER INCHES OF ASTM A36 STEEL THREADED RODS
3/4 & 1	6	5	3/8
1 - ½	6	8	3/8
2	8	8	3/8
2 – ½	10	9	½

NOMINAL PIPE SIZE IN	STD. STEEL PIPE	MAXIMUM SPAN FT. COPPER TUBE	MINIMUM ROD DIAMETER INCHES OF ASTM A36 STEEL THREADED RODS
3	12	10	½
4	14	12	5/8
5	14	12	5/8
6	16	14	3/4
8	18	16	7/8
10	20	18	7/8
12	20	18	7/8

B. Anchors, guides, and roller supports shall be installed in accordance with the contract drawings and manufacturer's recommendations to provide pipe support and control pipe movement for all piping systems. Anchors and guides shall be securely attached to the pipe support structure. Submit shop drawing for proposed pipe support structure for guides and anchors for approval of the Structural Engineer. Pipe alignment guides shall be Fig. 255 Grinnell, or as approved equal. Guides shall be sized to accommodate the pipe with insulation. Guides shall be steel factory, fabricated, with bolted two section outer cylinder and base for alignment of piping and two section guiding spider for bolting to pipe.

C. Hangers for pipe sizes ½ to 1 ½ inch (13 to 38 mm): Carbon steel, adjustable swivel, split ring.

D. Multiple or Trapeze hangers: Steel channels with welded spacers and hanger rods.

E. Vertical Support: Steel riser clamp.

F. Floor support for cold pipe: Cast iron adjustable pipe saddle, lock nut, nipple, floor flange, and concrete pier or steel support.

G. Copper pipe support: Carbon steel ring, adjustable, copper plated.

H. Hanger rods: Mild steel threaded both ends, threaded one end, or continuous threaded.

I. Inserts: Malleable iron case of galvanized steel shell and expander plug for threaded connection with lateral adjustment, top slot for reinforcing rods, lugs for attaching to forms; size inserts to suit threaded hanger rods.

2.3. VALVES

A. Provide parts list and assembly drawings (exploded view) for all valves in shop drawing submittals. Provide valves of the same type by the same manufacturer.

B. Triple Duty Valve Assembly: Assembly shall consist of a Victaulic Master Seal or approved equal butterfly valve with memory stop and a Series 779 Venturi-Check, rated for water service to 230 degrees Fahrenheit (110 degrees Celsius) and pressures to 300 psig (2065-kPa).

2.4. AUTOMATIC FLOW CONTROL VALVES

A. Automatic flow control valves shall be provided and installed where indicated. Units shall be factory set to maintain constant flow with plus or minus 5 percent over system pressure fluctuations, and equipped with a readout kit including flow meter, probes, hoses, flow charts, and carrying case. Each valve shall have an identification tag attached by chain and be factory marked with the zone identification, valve number and flow rate. Valves shall be line size and shall be Model AC or WU as manufactured by Flow Design, Inc., Griswald Controls, Bell & Gossett, or approved equal.

B. Valves shall be selected for 2 - 32 psig flow range. Furnish valves with extended valve handle, stem extender, ball valve, flow regulator and unions.

C. Design:

1. The GPM for the automatic flow control valves shall be factory set and shall automatically limit the rate of flow to within 5% of the specified GPM over at least 95 percent of the control range.

2. For ½ -inch – 2-inches, the flow cartridge shall be removable from the Y-body housing without the use of special tools to provide access for regulator change-out, inspection and cleaning without breaking the main piping. (Access shall be similar to that provided for removal of a Y-strainer screen).

3. Pump Head Requirements: the permanent pressure loss added to the pump head shall not exceed seven feet.

4. Each valve shall have two P/T ports.

5. All automatic flow control devices shall be supplied by a single source and certified flow tests, witnessed by a professional engineer, shall be available.

6. Five-year product warranty and free first-year cartridge exchange, up to 10 percent.

D. Construction:

1. The internal wear surfaces of the valve cartridge shall be stainless steel.

2. The internal flow cartridge body shall have machined threads so the spring free height may be compensated for without the use of fixed shims. A crimped sheet metal design is not acceptable.

3. The internal flow cartridge shall be permanently marked with the GPM and spring range.

4. For ½-inch through 2-inch pipe sizes: An assembly shall consist of a brass Y-type body, integral brass-body ball valve and "O" ring type union; Flow Design Model AC or approved equal.

5. For 2 ½-inches and larger flanged connections: Ductile-iron body suitable for mounting wafer style between standard 150# or 300# flanges. The long flange bolts and nuts shall be provided with each control valve. Flow Design Model WS or approved equal.

6. All valves shall be factory leak tested at 100 psig air under water.

E. Minimum ratings:

1. ½-inch through 2-inch pipe size: 400 PSIG at 250 degrees Fahrenheit.

2. 2 ½ -inch through 14-inch pipe size: 600 PSIG at 250 degrees Fahrenheit.

3. 16-inch through 30 -inch pipe size: 250 PSIG at 250 degrees Fahrenheit.

F. Flow Verification

1. The differential pressure across the Automatic Flow Control Valve shall be measured for flow verification and to determine the amount of system over heading or under pumping.

2.5. STRAINERS

A. Strainers shall be of the basket or "Y" type and shall be heavy and durable, constructed of ductile iron to ASTM A536 or the best grade gray iron with the bottoms drilled and plugged. Bodies shall have arrows clearly cast on the sides to show flow direction. Strainers shall be equipped with easily removable covers and brass sediment baskets made of stainless steel or brass not less than #22 gauge in thickness. Total area of basket perforations shall be not less than four times the cross section of the entering pipe. Flow shall be into basket, and then out through the perforations. Strainers shall be suitable for water or the intended fluid. Strainers 2 inches and smaller shall have threaded or solder ends, 2 inches and larger shall have flanged ends.

B. Strainer screens shall be stainless steel with perforations and shall be 1/16-inch for pipe sizes 5 inches and less, 1/8-inch (40 percent open area) perforations for pipe sizes 6-inch and greater.

C. Provide valved and capped (with chain) blowdowns in each strainer. Blowdown valves shall be Appolo 78-100/200 series or as approved equal.

D. Strainers shall be manufactured by Victaulic Style 732/W732, Watts, Mueller, Armstrong, Yarway, Spirax/Sarco or as approved equal.

2.6. UNIONS, FLANGES, AND COUPLINGS

A. Unions in steel pipe 2-inches and smaller shall be malleable iron with brass inserted seats

designed for a working pressure of 150 psig.

B. Unions in copper pipe 2-inches and smaller shall be sweat fittings with bronze seats designed for a working pressure of 125 psig.

C. Unions in stainless steel pipe 2-inches and smaller shall be hexagonal threaded type stainless steel unions, with VicPress ends. Basis of Design: Victaulic Style P584.

D. Flanges for steel pipe over 2 inches shall be 150 psig, forged steel, slip on. Gaskets shall be 1/16 inch thick pre-formed neoprene.

E. Flanges for copper pipe over 2 inches shall be bronze. Gaskets shall be 1/16 inch thick preformed neoprene.

2.7. MANUAL AIR VENTS

A. Manual air vents shall be similar to the hereinafter specified gauge valves. Provide 1/4-inch size on ¾-inch pipe and smaller, ½ -inch size on 1-inch pipe and larger. Install at all high points of piping. Valves shall be Crane No. 88, or as approved equal, with threaded ends, bronze body, bronze or brass bonnet and bronze stem.

2.8. THERMOMETERS

A. Unless otherwise indicated, thermometers shall be ASTM E1, in a glass type, organic filled, 9-inch scale size, corrosion-resistant metal case, with "any-angle" mounting with positive locking device. Trerice Industrial Thermometers, Weksler Instruments, Ernst Gage Co., Miljoco, or approved equal. Insertion stem length shall suite the pipe size and configuration. Thermometer wells shall be brass with brass union hubs in copper and in ferrous piping. Where piping is insulated or otherwise covered, use wells with lagging extension. Where wells are installed in pipe tees at turns, increase pipe size so that well does not restrict flow. Accuracy shall be 2 percent.

B. Unless otherwise indicated, thermometer ranges shall be as follows:

1. Chilled water systems: 0 degrees F to 100 degrees Fahrenheit, 1 degrees Fahrenheit Division
2. Heating Water: 30 degrees Fahrenheit to 240 degrees Fahrenheit, 2 degrees Fahrenheit Division.

C. Provide heat conducting compound in wells.

D. At Contractor's option, light powered thermometers may be utilized in lieu of organic filled thermometers.

2.9. PRESSURE GAUGES

A. Unless otherwise indicated, pressure gauges shall be the bronze bourdon tube type, 4-1/2-inch dial, stem mounting, cast aluminum adjustable pointer, 1 percent accuracy over middle half of scale range, 1-1/2 percent over balance: Trerice Model 600C; Weksler Instruments, Ernst Gage Co., Miljoco, or as approved equal.

B. Gauges shall have pressure, vacuum, compound, or retard ranges as required, select ranges so that the normal readings are at the approximate midpoint and maximum system pressures do not exceed full scale.

C. Furnish and install a gauge valve at each pressure gauge. Gauge valves shall be Crane Model No. 88, Needle Valve, Ernst Gage Co. FLG 200, Wexler Instrument Corp. Type BBV4, or approved equal, rated for pressure intended.

D. Gauge connections for pressure gauges, thermometers, or control instruments shall be made using tee fittings, except that gauge connections up to 1-inch size in steel may be using threaded extra heavy pipe couplings welded directly to the main, provided that the main is at least 2-inch size for 2-inch connections, 3-inch size for 3/4-inch connections, and 4-inch size for 1-inch connections. Minimum gauge connection shall be 2-inch ips.

E. Provide snubbers on all gauges. Snubbers shall be No. 872 by Trerice, RS1/RS6 by Wexler Instruments, Miljoco or as approved equal.

2.10. FLOW METERS

A. Griswold or Bell & Gossett disturbed flow measurement quickset flow meters shall be utilized in lieu of sentinel type flow meters. Units shall consist of a spun steel venturi welded into the pipe. Disturbed fluid shall be channeled through the throat of the venturi with a multi-point Piezo Ring. Accuracy shall be ± 1% PSID with no straight pipe run required. Furnish differential pressure gauge supplied with carrying case and hoses.

2.11. PIPING SPECIALTIES

A. Furnish and install flexible pipe connections, as specified and/or shown on the drawings, at suction and discharge connections of all in-line pumps, all vibrating equipment, and elsewhere as shown. Refer to Division 23 Section, *Vibration Controls for HVAC, Plumbing and Fire Protection Equipment* for specifications.

2.12. ESCUTCHEONS

A. Provide chromium plated escutcheons properly fitted and secured with set screws on all exposed piping which passes through walls, floors or ceilings of finished spaces.

B. All escutcheon plates shall be chrome plated spun brass of plain pattern, and shall be set tight on the pipe and to the building surface. Plastic escutcheon plates will not be accepted.

2.13. DIELECTRIC CONNECTIONS:

A. Furnish and install electrically insulated dielectric waterway fittings, unions or flanges, as manufactured by Victaulic Company Style 47, EPCO Sales, Inc., or approved equal at the following locations:

1. Where steel piping systems join copper piping.

2. Where copper tube connects to domestic water storage tanks, water heaters, heat

exchangers, expansion tanks, and other steel vessels.

3. Avoid the installation of steel nipples, cast iron or steel valves and specialties, or other ferrous components in predominately copper piping systems. Where such installation is necessary, isolate the component with dielectric connections. Do not mix steel pipe and copper tube in the same run of pipe or in the same section of a piping system.

2.14. SLEEVES

A. Sleeves shall be provided around all pipes through walls, floors, ceilings, partitions, roof structure members or other building parts. Sleeves shall be standard weight galvanized iron pipe two sizes larger than the pipe or insulation so that pipe or insulation shall pass through masonry or concrete walls or floors. Provide 20 gauge galvanized steel sheet or galvanized pipe sleeves for all piping passing through frame walls.

B. Sleeves through floors shall be flush with the floor except for sleeves passing through Equipment Rooms which shall extend ¾-inch above the floor. Refer to Division 23 Section, *Vibration Controls for HVAC, Plumbing and Fire Protection Equipment* for mechanical equipment room penetrations additional requirements. Space between the pipe and sleeve shall be caulked. Escutcheon plates shall be constructed to conceal the ends of sleeves. Each trade shall be responsible for drilling existing floors and walls for necessary sleeve holes. Drilling methods and tools shall be as hereinbefore specified.

C. Sleeves through walls and floors shall be sealed with a waterproof caulking compound.

D. Firestop at sleeves that penetrate smoke barriers smoke partitions and/or rated walls/floors.

PART 3. EXECUTION

3.1. GENERAL PIPING INSTALLATION REQUIREMENTS

A. All pipes shall be cut accurately to measurements established at the building, and shall be worked into place without springing or forcing, properly clearing all windows, doors and other openings. Excessive cutting or other weakening of the building structure to facilitate piping installation will not be permitted. All pipes shall be so installed as to permit free expansion and contraction without causing damage. All horizontal mains shall pitch down in the direction of flow with a grade of not less than 1 inch in 40 feet. All open ends of pipe lines, equipment, etc., shall be properly capped or plugged during installation to keep dirt or other foreign material out of the system. All pipes shall be run parallel with the lines of the building and as close to walls, columns and ceilings as may be practical, with proper pitch. All piping shall be arranged so as not to interfere with removal of other equipment on devices not to block access to doors, windows, manholes, or other access openings. Flanges or unions, as applicable for the type of piping specified, shall be provided in the piping at connections to all items of equipment, coils, etc., and installed so that there will be no interference with the installation of the equipment, ducts, etc. All valves and specialties shall be placed to permit easy operation and access and all valves shall be regulated, packed and glands adjusted at the completion of the work before final acceptance. All piping shall be installed so as to avoid air or liquid pockets throughout the work. Ends of pipe shall be reamed so as to remove all burrs.

B. All piping shall be graded to convey entrained air to high points where automatic air vents shall be provided. The size of supply and return pipes for each piece of equipment shall in no case be smaller than the outlets in the equipment.

C. All piping shall be run to provide a minimum clearance of 2-inches between finished covering on such piping and all adjacent work. Group piping wherever practical at common elevations.

D. All valves, strainers, caps, and other fittings shall be readily accessible.

E. Drain valves with hose connections shall be provided at low points for drainage of piping systems. Blow down valves shall be provided at the ends of all mains and branches so as to properly clean by blowing down the lines throughout in the direction of normal flow.

F. All branches from water mains shall be taken from the top of the supply mains at an angle of forty-five (45) degrees above the horizontal, unless otherwise directed. Branches feeding down shall be taken from the side or bottom of the main on water mains only. All connections shall be carefully made to insure unrestricted circulation, eliminate air pockets or trapped condensate, and permit the complete drainage of the system.

G. Cutoff valves shall be provided on each branch line from the mains on all heating/air conditioning lines.

H. Shut-off valves shall be installed at the inlet and outlet of each coil and piece of equipment to permit isolation for maintenance and repair. Units having multiple coils shall have separate valves for each coil.

I. Balancing valves shall be installed in all heating/air conditioning water branches and at all pumps, and where indicated on the drawings.

J. Unions shall be installed on all bypasses, ahead of all traps, at all connections to equipment, where shown on drawings or where required to facilitate removal of equipment whether shown or not.

K. Spring clamp plates (escutcheons) shall be provided where pipes are exposed in the building and run through walls, floors, or ceilings. Plates shall be chrome plated spun brass of plain pattern, and shall be set tight on the pipe and to the building surface.

L. If the size of any piping is not clearly evident in the drawings, the Contractor shall request instructions for the Engineer as to the proper sizing. Any changes resulting from the Contractor's failure to request clarification shall be at his expense. Where pipe size discrepancies or conflicts exist in the drawings, the larger pipe size shall govern.

M. Install all valves with stem upright or horizontal, not inverted.

N. Where pipe support members are welded to structural building framing, scrape, brush clean, weld and apply one coat of zinc rich primer.

O. Provide clearance for installation of insulation and access to valves and fittings.

P. Protect piping systems from entry of foreign materials by temporary covers, completing sections of the work, and isolating parts of completed system.

Q. All water containing pipes shall be routed clear of combustion air dampers and louvers to prevent freezing condition when dampers are open.

R. Provide manual air vents at top of piping systems.

3.2. THERMOMETER AND PRESSURE GAGE INSTALLATION REQUIREMENTS.

A. Install thermometers and adjust vertical and tilted positions.

B. Install separable sockets in vertical position in piping tees where fixed thermometers are indicated.

1. Install with socket extending to one-third diameter of pipe.

2. Fill sockets with oil or graphite and secure caps.

C. Install pressure gages in piping tees with pressure-gage valve located on a pipe at most readable location.

D. Adjust faces of thermometer and gages to proper angle for best visibility.

E. Clean windows of thermometer and gages and clean factory-finished surfaces. Replace cracked and broken window, and repair scratched and marred surfaces with manufacturer's touch up paint.

3.3. VALVE INSTALLATION REQUIREMENTS

A. Examine piping system for compliance with requirements for installation tolerances and other conditions affecting performance of valves. Do not proceed with installation until unsatisfactory conditions have been corrected.

B. Examine valve interior for cleanliness, freedom from foreign matter, and corrosion. Remove special packing materials, such as blocks, used to prevent disc movement during shipping and handling.

C. Operate valves from fully open to fully closed positions. Examine guides and seats made accessible by such operation.

D. Examine threads on valve and mating pipe for form and cleanliness.

E. Examine mating flange faces for conditions that might cause leakage. Check bolting for proper size, length, and material. Check gasket material for proper size, material composition suitable for service, and freedom from defects and damage.

F. Do not attempt to repair defective valves; replace with new valves.

G. Install valves as indicated, according to manufacturer's written instructions.

H. Piping installation requirements are specified in other Division 23 Sections. Drawings indicate the general arrangement of piping, fittings, and specialties.

I. Install valves with unions or flanges at each piece of equipment arranged to allow servicing, maintenance, and equipment removal without system shutdown.

J. Locate valves for easy access and provide separate support where necessary.

K. Install valves in horizontal piping with stem at or above the center of the pipe.

L. Install valves in a position to allow full stem movement.

M. Adjust or replace packing after piping systems have been tested and put into service, but before final adjusting and balancing. Replace valves if leak persists.

3.4. AUTOFLOW CONTROL VALVE INSTALLATION

A. Install automatic flow control valves on the return lines of coils as indicated on the contract drawings. A balancing valve on supply side is not acceptable.

B. The standard ports and handles shall clear 1-inch thick insulation. Provide handle and port extensions for all insulation over 1-inch thick.

C. Install, on the supply side of coils, a Y-strainer (40 mesh, 2 GPM or less; 20 mesh, above 2 GPM) with brass blow down valve with ¾-inch hose-end connection with cap. Inline (basket) strainer is not acceptable.

D. Where installed in piping with a vapor barrier, field insulate valve body to prevent surface condensation.

3.5. PIPE JOINTS INSTALLATION REQUIREMENTS

A. Grooved Joints: Grooved joint shall be installed in accordance with the manufacturer’s written recommendations. Grooved ends shall be clean and free from indentations, projections, or roll marks. The gasket shall be molded and produced by the coupling manufacturer of an elastomer suitable for the intended service. The coupling manufacturer’s factory trained representative shall provide on-site training for the contractor’s field personnel in the use of grooving tools and installation of product. The representative shall periodically visit the job site to ensure best practices in grooved product installation are being followed. (A distributor’s representative is not considered qualified to conduct the training.)

B. Screwed Joints: All screwed joints shall be made with tapered threads properly cut. Screwed joints shall be made perfectly tight with a stiff mixture of graphite and oil, applied with a brush to the male threads on the fittings.

C. Soldered Joints and Copper Piping: Joints in copper piping shall conform to the following minimum standards.

1. The pipes shall be cut to a length making certain that the ends are square, using a fins hacksaw blade or tube cutter. The ends of all pipes shall be reamed and all burrs removed.

2. The outside end of the pipe and the cut end of the fitting shall be cleaned with steel wool, sand cloth, or steel wire brush. All dark spots shall be removed.

3. The flux shall be applied evenly and sparingly to the outside end of the pipe and the inside of the outer end of the fitting until all surfaces to be jointed are completely covered. The piping and fitting shall be slipped together and reworked several times to insure an even distribution of the flux.

4. The correct amount of solder per joint for each size pipe shall be used in accordance with the manufacturer's recommendations.

5. Solder joints shall be made by using a direct flame from a torch.

6. On pipe sizes larger than ¼-inch, the fittings and valves in the pipe shall be moved or tapped with a hammer when the solder starts to melt to insure an even distribution of the solder.

7. The excess solder shall be removed while it is still in the plastic state leaving a fillet around the cup of the fitting.

8. Solder joints shall be suitable for working pressure of 100 psig and for working temperature of not less than 250 degrees F. The type of solder and flux used will be submitted for approval. Type 95-5 shall be the minimum standard.

9. Lead and antimony-based solders shall not be used for potable water systems. Brazing and silver solders are acceptable.

D. Where copper piping joins steel piping, approved bronze adapters shall be used.

E. Prohibited Connections: No direct weld, soldered, or brazed connections, without unions or flanges, shall be made to valves, strainers, apparatus, or related equipment. Right and left couplings, long threads, or caulking of pipe threads or gasket joints will not be permitted.

3.6. HANGERS INSTALLATION REQUIREMENTS

A. General: All hangers shall be of an approved type arranged to maintain the required grading and pitching of lines to prevent vibration and to provide for expansion and contraction. Provide protection saddles between hangers and insulation on heating water insulated pipe. Saddles shall be Grinnells Figure 173/273 or approved equal. Provide approved spacers between saddles and pipe where flexible insulation is specified. Provide insulation protection shields for insulated piping without saddles. Shield shall be Grinnell Figure 167 or as approved equal.

B. Spacing: Regardless of spacing, hangers shall be provided at or near all changes in direction, both vertical and horizontal, for all piping. For cast iron soil pipe, one hanger shall be placed

at each hub or bell.

C. Vertical Lines: Shall be supported at their bases, using either a suitable hanger placed in a horizontal line near the riser, or a base type fitting set on a pedestal, foundation or support. All vertical lines extending through more than one floor level shall be supported at each floor with a riser clamp. Riser clamp shall be Grinnell Co.'s Figure 261, or approved equal. All vertical drops to pump suction elbows shall be supported by floor posts.

D. Racks and Brackets: All horizontal piping on vertical walls shall be properly supported by suitable racks securely anchored into the wall construction. Where not practical to obtain ceiling anchorage, all piping near walls shall be supported by approved brackets securely anchored into the wall construction. Washer plates (Fib. 60, 60L) and other miscellaneous attachments, fasteners, etc., shall be Grinnell or as approved equal. All exterior hanger and bracket systems in their entirety shall be galvanized.

E. Pipe Hangers and supports shall be attached to the panel point at the top chord of bar joist or at a location approved by the structural engineer.

F. Select hangers and components for loads imposed. Secure rods with double nuts.

G. Support of horizontal piping shall allow for vertical adjustment after installation of piping.

H. Support overhead piping with clevis hangers.

I. Do not support all parallel piping from the same joist. Stagger all supports.

J. Install anchors at locations to prevent stresses from exceeding those permitted by ASME B31.9 and to prevent transfer of loading and stresses to connected equipment.

K. Fabricate and install steel anchors by welding steel shapes, plates, and bars to piping and to structure. Comply with ASME B31.9 and AWS D1.1.

L. Install pipe anchors according to expansion fitting manufacturer's written instructions if expansion fittings are indicated.

3.7. AIR VENTING INSTALLATION REQUIREMENTS

A. The top of each hydronic water supply and return piping and other points as indicated or where necessary for the removal of air from the system or equipment, shall be vented using an approved type of manual air vent.

B. In addition to manual air vents at high points of system, each item of water heat transfer equipment shall be manually vented using an approved type manual air vent. All air vents shall be accessible.

3.8. EXPANSION LOOPS AND SWING CONNECTION INSTALLATION REQUIREMENTS

A. Install expansion fittings according to manufacturer's written instructions.

B. Install expansion fittings in sizes matching pipe size in which they are installed.

C. Align expansion fittings to avoid end-loading and torsional stress.

D. Install pipe bends and loops cold-sprung in tension or compression as required to partly absorb tension or compression produced during anticipated change in temperature.

E. Attach pipe bends and loops to anchors.

1. Steel Anchors: Attach by welding. Comply with ASME B31.9 and ASME Boiler and Pressure Vessel Code: Section IX, "Welding and Brazing Qualifications."

2. Concrete Anchors: Attach by fasteners. Follow fastener manufacturer's written instructions.

F. Connect risers and branch connections to mains with at least five pipe fittings, including tee in main.

G. Connect risers and branch connections to terminal units with at least four pipe fittings, including tee in riser.

H. Connect mains and branch connections to terminal units with at least four pipe fittings, including tee in main.

3.9. PIPING IDENTIFICATION INSTALLATION REQUIREMENTS

A. All piping shall be identified with painted background marked with the name of the service with arrows to indicate flow direction. Color code and system identification shall comply with ANSI Standards and piping identification system shall comply with ASME A13.1-81., scheme for the identification of piping systems and ASHRAE Fundamentals Handbook, latest edition.

B. Markings shall be plain block letters, stenciled on pipes, and shall be located near each branch connection, near each valve, and at least every 10 feet on straight runs of pipe. Where pipes are adjacent to each other, markings shall be neatly lined up. All markings shall be located in such manner as to be easily legible from the floor. Pipe identification schedule shall be as follows:

OUTSIDE DIAMETER OF PIPE OR COVERING (INCHES)	LENGTH OF COLOR FIELD (INCHES)	SIZE OF LETTERS (INCHES)
½ to 1 ¼	8	½
1-½ to 2	8	¾
2 ½ to 6	12	1 ¼
8 to 10	24	2 ½
Over 10	32	3 ½

3.10. VALVE IDENTIFICATION REQUIREMENTS

A. All valves shall be tagged with a numbered tag.

B. The tags shall be made of 1-inch diameter brass tags fastened to the valve by means of brass chains. Numbers shall agree with valve numbers on diagrammatic herein before specified.

C. Provide a minimum of six (6) valve charts with valve numbers indicating valve type, size, manufacturer and service.

D. Additional valve charts shall be mounted behind glazed wooden frames and be hung in each mechanical equipment room including each air handling unit mechanical equipment room. Additional copies shall be provided in each copy of the O&M manuals.

3.11. CLEANING PIPING AND EQUIPMENT

A. All heating water and HVAC systems shall be cleaned by filling with a solution of one (1) pound of trisodium phosphate to each 50 gallons of water and circulating this solution for a period of six (6) hours during which time the system shall reach operating temperature. The systems shall then be flushed with fresh water and refilled with fresh water and/or where indicated antifreeze solution and purged of all air.

B. All chilled water, heating water, and HVAC piping system shall be flushed clean with fresh water. See Division 22 Sections, *Plumbing Fixtures* and *Plumbing Equipment* for domestic potable water cleaning and sterilization. Where indicated, hydronic systems shall be filled with 30 percent by volume antifreeze.

C. Any equipment, such as coils that have small tubing, shall be bypassed to prevent deposition of debris from the piping. Water balancing shall not be scheduled until the completion of the cleaning and treatment process.

D. All strainers shall be inspected and cleaned prior to testing and balancing. In addition, prior to substantial completion, contractor must inspect and clean all strainers.

END OF SECTION

DIVISION 23 SECTION 230548
VIBRATION CONTROLS FOR HVAC, PLUMBING AND FIRE PROTECTION EQUIPMENT

TABLE OF CONTENTS

PART 1 GENERAL

1.1 GENERAL
1.2 SUMMARY
1.3 SUBMITTALS
1.4 PROJECT RECORD DOCUMENTS

PART 2 PRODUCTS

2.1 MANUFACTURER
2.2 CORROSION PROTECTION FOR STEEL PARTS
2.3 SPRING MOUNTS AND SOUND PADS
2.4 SPRINGS
2.5 NEOPRENE
2.6 SPRING ISOLATORS
2.7 SUSPENSION ISOLATORS
2.8 FLEXIBLE CONNECTORS FOR PIPING
2.9 NEOPRENE PAD ISOLATORS

PART 3 EXECUTION

3.1 GENERAL PROVISIONS
3.2 FLEXIBLE PIPE CONNECTORS
3.3 ISOLATION FOR SPECIFIC EQUIPMENT

SECTION 230548 - VIBRATION CONTROLS FOR HVAC, PLUMBING AND FIRE PROTECTION EQUIPMENT

PART 1 RELATED DOCUMENTS

1.1 GENERAL

A. Drawings and General Provisions of Contract, including General and Supplementary Conditions and Division 0I Specification Sections apply to work of this section.

B. All work under this section shall also be subject to the requirements of Division 23 Section, *Common Work Results for HVAC*.

1.2 SUMMARY

A. Provide all labor and materials necessary to furnish and install vibration control systems on this project as herein specified and/or shown on the drawings.

B. Mount all mechanical equipment on suitable vibration isolators so as to prevent transmission of vibration into or through the building structure. Isolators shall be as manufactured by Mason Industries, Inc., Korfund, Inc., Amber Booth, Vibration Mounting and Controls, or approved equal, and shall be selected by the isolator manufacturer for each item of equipment in accordance with requirements hereinafter specified.

C. The equipment manufacturer shall supply all pump and motor bases, fan and motor bases, cradles, isolation pipe/duct hangers, spring and/or neoprene isolators, neoprene pads, flexible connectors, etc. as a coordinated package by a single manufacturer.

D. Select isolators for uniform static deflections according to distribution of weight; and for not less than the indicated isolation efficiency with the lowest rotational speed of equipment as the disturbing frequency.

E. Isolators and bases shall be stable during stopping and starting of equipment without transverse or eccentric movement of equipment, and shall be designed to resist horizontal forces of equipment which may operate unbalanced.

F. In general, select isolators on the basis of criteria as specified in the ASHRAE Applications Handbook, Latest Edition.

1.3 SUBMITTALS

A. Shop Drawings: Indicate inertia bases and locate vibration isolators, with static and dynamic load on each.

B. Product Data: Provide schedule of vibration isolator type with location and load on each.

C. Manufacturer’s Installation Instructions: Indicate special procedures and setting dimensions.

D. Manufacturer’s Certificate: Certify that isolators are properly installed and adjusted to meet or exceed specified requirements.

1.4 PROJECT RECORD DOCUMENTS

A. Record actual locations of hangers including attachment points.

PART 2 PRODUCTS

2.1 MANUFACTURER

A. Isolators shall be the equivalent of the following types by Mason Industries, Inc., Korfund, Inc. or approved equal.

2.2 CORROSION PROTECTION FOR STEEL PARTS

A. Where steel parts are exposed to weather or humid environments provide hot-dipped galvanized coating of at least 2 ounces of zinc per square foot of surface. Coat springs with neoprene.

2.3 SPRING MOUNTS AND SOUND PADS

A. Provide all spring mounts with leveling devices, minimum .25 inch thick neoprene sound pads, and zinc chromate plated hardware.

B. All sound pads shall be size for minimum deflection of .05 inch; meet requirements for neoprene pad isolators.

2.4 SPRINGS

A. All springs shall have minimum horizontal stiffness equal to 75 percent vertical stiffness, with working deflection between .3 and .6 of maximum deflection.

2.5 NEOPRENE

A. Grade durometer 40, 50 OR 60 AND OIL RESISTANT.

2.6 SPRING ISOLATORS

A. General: Provide spring isolators or protected spring isolators that are adjustable and laterally stable with free-standing springs of horizontal stiffness at minimum 80 percent of the vertical (axial) stiffness. For machine-attached and floor-attached restraining elements, separate from metal-to-metal contact by neoprene cushions 1/8 inch thick minimum. Provide neoprene acoustic friction pads at least ¼ inch thick.

B. Spring Isolator: Spring type isolators shall be free standing and laterally stable without any housing and complete with ¼ " neoprene acoustical friction pads between the baseplate and the support. All mountings shall have leveling bolts that must be rigidly bolted to the equipment. Spring diameters shall be no less than 0.8 of the compressed height of the spring at rated load. Springs shall have a minimum additional travel to solid equal to 50% of the rated deflections, compressed spring height and solid spring height. Mountings shall be type SLF as manufactured by Mason Industries, Inc. or as approved equal.

2.7 SUSPENSION ISOLATORS

A. General: Provide hangers with suspension isolators encased in open steel brackets. Isolate hanger rods from isolator steel brackets with neoprene-lined opening.

B. Suspension Neoprene Isolators: Provide double-deflection elements with minimum 3/8 inch deflection.

C. Suspension Spring Isolators: Vibration hangers shall contain a steel spring and 0.3" deflection neoprene element in series. The neoprene element shall be molded with a rod isolation bushing that passes through the hanger box. Spring diameters and hanger box lower hole sizes shall be large enough to permit the hanger rod to swing thru a 30° arc before contacting the hole and short circuiting the spring. Springs shall have a minimum additional travel to solid equal to 50% of the rated deflection. Submittals shall include a scale drawing of the hanger showing the 30° capability. Hangers shall be type 30N.

2.8 FLEXIBLE CONNECTORS FOR PIPING

A. General: Straight or elbow flexible connectors rated for temperatures, pressures, and fluids to be conveyed. Provide flexible connectors with the strength 4 times operating pressure at highest system operating temperature. Provide elbow flexible connectors with a permanently set angle.

B. Elastomeric Flexible Connectors: Flexible neoprene connectors shall be manufactured of multiple plys of nylon tire cord fabric and neoprene both molded and cured in hydraulic rubber presses. No steel wire or rings shall be used as pressure reinforcement. Straight connectors shall have two spheres. Connectors up to and including 1 ½ " diameter may have threaded ends. Connectors 2" and larger shall be manufactured with floating galvanized flanges recessed to lock the connector's raised face neoprene flanges. Hoses shall be installed on the equipment side of the shut-off valves. Connectors shall be rated a minimum of 150 psi at 220°F. Flanged equipment shall be directly connected to neoprene elbows in the size range 2 ½ " through 12" if the piping makes a 90° turn at the equipment. All straight through connections shall be made with twin-spheres properly pre-extended as recommended by the manufacturer to prevent additional elongation under pressure. 12" and larger sizes operating above 100 psi shall employ control cables with end fittings isolated by means of ½ " thick bridge bearing neoprene washer bushings designed for a maximum of 1000 psi.

Submittals shall include two test reports by independent consultants showing minimum reductions of 20 DB in vibration accelerations and 10 DB in sound pressure levels at typical blade passage frequencies.

Elbows shall be Mason-Flex type MFNEC, straight connectors Mason-Flex type MFTFU or MFTNC, and control cable assemblies type ACC.

C. Metal Flexible Connectors: Fabricated of Grade E phosphor bronze, monel or corrugated stainless steel tube covered with comparable bronze or stainless steel braid restraining and pressure cover. Sizes 3" and larger shall be flanged. Sizes 2 ½ " and smaller shall have male nipples. Lengths shall be as indicated:

Nominal Diameter (Inches)	Length (Inches)

½ "	12"
3/4"	12"
1 ½ "	12"
1 ½ "	12"
2"	12"
2 ½ "	12"
3"	18"
4"	18"
5"	24"
6"	24"
8"	24"
10"	24"
12"	36"
14"	36"
16"	36"

Hoses shall be installed on the equipment side of the shut-off valves horizontally and parallel to the equipment shafts wherever possible. Hoses shall be type BSS.

2.1 NEOPRENE PAD ISOLATORS

A. Rubber or neoprene waffle pads.

1. 30 durometer
2. Minimum 2 inch (13mm) thick
3. Maximum loading 40 psi (275 kPa)
4. Height of ribs shall not exceed 0.7 times width.

B. Configuration: ½ inch (13mm) thick waffle pads bonded each side of ¼ inch (6 mm) thick steel plate.

PART 3 EXECUTION

3.1 GENERAL PROVISIONS

A. Install vibration-and-noise isolation materials and equipment as indicated and in accordance with machinery manufacturer's instructions.

B. Where neoprene elements of vibration isolator may be subjected to high pipe temperatures above 160ºF, provide metal heat shields or thermal isolators.

C. All vibration isolators exposed to weather or humid environment shall be hot dipped galvanized with springs coated with neoprene in accordance with paragraph hereinbefore described.

D. Common Machinery Foundations: Mount electrical motors on the same foundations as driven machinery. Support piping connections, strainers, valves, and risers on the same foundation as the pumps.

E. Machinery: Provide vibration isolators, flexible connectors and seismic snubbers in accordance with manufacturer's recommendations. Machinery with spring isolators or protected spring isolators shall rock or move freely within limits of stops or seismic snubber restraints.

F. Stability: Isolators shall be stable during starting and stopping of machinery without traverse and eccentric movement of machinery that would damage or adversely affect the machinery or attachments.

G. Lateral Motion: The installed vibration isolation systems for each piece of floor or ceiling mounted machinery shall have a maximum lateral motion under machinery start up and shut down conditions of not more than ¼ -inch. Restrain motions in excess by approved spring mountings.

H. Unbalanced Machinery: Provide foundation suspension systems specifically designed to resist horizontal forces for machinery with large unbalanced horizontal forces. Vibration isolator systems shall conform to the machinery manufacturer's recommendations.

I. Nonrotating Machinery: Mount nonrotating machinery in systems which includes rotating or vibrating machinery on isolators having the same deflection as the hangers and supports for the pipe connected to.

J. Vibration isolation ceiling hangers shall be installed so that the hanger rods do not touch the sides of the isolator housing, thereby seriously degrading the vibration isolation performance. Vibration isolation ceiling hangers shall be located so that the hanger housing may rotate 360º without touching any object.

K. Electrical Connections: Provide flexible conduit or multiple conductor cable connections for machinery with sufficient extra length to permit 2 inch minimum displacement in any direction without damage.

L. Systems Not To Be Vibration Isolated: Do not provide vibration isolation for electrical raceways and conduits or for fire protection, storm, sanitary, and domestic water piping systems which do not include pumps or other vibrating, rotating, or pulsating equipment including control and pressure reducing valves.

M. Install in accordance with manufacturer’s instructions.

N. Install isolation for motor driven equipment.

O. Install spring hangers without binding.

P. On closed spring isolators, adjust so side stabilizers are clear under normal operating conditions.

Q. Prior to making piping connections to equipment with operating weights substantially different from installed weights, block up equipment with temporary shims to final height. When full load is applied, adjust isolators to load to allow shim removal.

R. Connect wiring to isolated equipment with flexible hanging loop.

3.2 FLEXIBLE PIPE CONNECTORS

A. Provide flexible connectors in accordance with manufacturers instructions where piping systems serving vibration isolated equipment and as shown on the drawings. Flexible connectors shall be installed near the connection to the equipment. Where liquid pulsation dampening is required, flexible connectors with spherical configuration may be used.

3.3 ISOLATION FOR SPECIFIC EQUIPMENT

A. The vibration isolator manufacture shall provide isolators for all pieces of equipment provided for the job. Isolator shall be selected by the isolator manufacturer on the basis of criteria as specified in the ASHRAE Applications Handbook, latest edition, unless a more stringent requirement is indicated on the drawings.

B. Pumps:

1. Provide discharge and suction vibration isolators at all in-line pumps.

C. Fans:

1. Fans up to 22" wheel diameter shall be mounted stable steel springs in series with ribbed neoprene pads selected for not less than 1.5" static deflection (Mason Industries Type SLF or equivalent).

2. Fans with wheel diameters 24" and greater shall be mounted on unhoused stable steel springs in series with ribbed neoprene pads and structural rails selected for not less than 2.5" static deflection (Mason Industries Type SLF or equivalent and structural rails Type ICS with thrust restraint provisions) and rails shall be Type ICS.

3. All fans suspended from the ceiling, joists or roof structure, including outside air fans, return fans, relief air, ventilation fans, and exhaust fans, shall be suspended using hangers incorporating steel springs in series with neoprene, selected for not less than 3.5" static deflection under full load (Mason Industries Type 30N or equivalent).

D. All VAV boxes (supply and exhaust terminal units) shall be suspended using hangers incorporating steel springs in series with neoprene selected for not less than 1" static deflection under full load (Mason Industries Type 30N or equivalent).

END OF SECTION

DIVISION 23 SECTION 230593
TESTING, ADJUSTING, AND BALANCING FOR HVAC AND PLUMBING
TABLE OF CONTENTS

PART 1. GENERAL

1.1. GENERAL
1.2. EXAMINATION
1.3. QUALIFICATIONS OF THE BALANCE AGENCY
1.4. PRE-BALANCING CONFERENCE
1.5. STANDARDS
1.6. COORDINATION
1.7. INSTALLATION TOLERANCES
1.8. RESPONSIBILITIES OF THE MECHANICAL CONTRACTOR
1.9. RESPONSIBILITIES OF THE TEMPERATURE CONTROL CONTRACTOR
1.10. NOTIFICATION FOR TESTING AND BALANCING WORK TO BEGIN
1.11. DEFICIENCIES
1.12. ADJUSTING
1.13. ALTERNATES
1.14. GENERAL COMMISSIONING REQUIREMENTS

PART 2. PRODUCTS (NOT APPLICABLE)

PART 3. EXECUTION

3.1. GENERAL
3.2. EXAMINATION
3.3. AIR SYSTEM PROCEDURES
3.4. WATER SYSTEM PROCEDURES
3.5. TESTING AND BALANCING OF EXISTING SYSTEMS
3.6. FUME HOOD TESTING AND BALANCING
3.7. VERIFICATION OF TEMPERATURE CONTROL
3.8. BUILDING STATIC PRESSURE MEASUREMENT
3.9. TEST AND BALANCE REPORTS
3.10. TEST REPORT FORMS

SECTION 230593 - TESTING, ADJUSTING, AND BALANCING FOR HVAC AND PLUMBING

PART 1. GENERAL

1.1. GENERAL

A. This section covers performance testing, adjusting and balancing of heating, ventilating, air conditioning and domestic re-circulating systems as specified in Division 23 Section, *Heating, Ventilating, and Air Conditioning Equipment* and in Division 22 Section, *Plumbing Fixtures and Plumbing Equipment.*

B. For *Common Work Results of HVAC,* See Division 23. See Division 01 for *General Requirements*.

C. The mechanical contractor shall select and employ an impartial, independent balancing agency to provide testing and balancing services for the heating, ventilating and air conditioning (HVAC) systems and other specified systems of this project.

D. The work included in this section consists of furnishing labor, instruments, and tools required in testing, adjusting and balancing the HVAC systems, as described in these specifications or shown on accompanying drawings. Services shall include checking equipment performance, taking the specified measurements, and recording and reporting the results.

E. The items requiring testing, adjusting, and balancing include, but are not limited to, the following:

<u>Air Systems</u>:
Existing Air Handling Units
Existing Return Air Fan
Existing and New Fume Hoods
Coils (Air Temperatures & Static Pressure Drops)
Diffusers, Registers and Grilles
Exhaust Fans
Fume Hood Systems
Room Pressure Differentials
VAV Systems
Zone Branch and Main Ducts

<u>Hydronic Systems</u>:
Autoflow valves
Coils
Flow Meter Fittings
In-line Pumps
Pumps
System Mains and Branches
VAV Hot Water Coils
Existing Air Handling Unit Coils
New Freeze Protection Pumps
Existing Chilled Water Pumps
Existing Hot Water Pumps

In addition, any existing fans, equipment or air devices specified to be re-used under this project shall be tested and balanced, similar to new fans.

1.2. EXAMINATION

A. Verify that systems are complete and operable before commencing work. Ensure the following conditions:

1. Systems are started and operating in a safe and normal condition.

2. Temperature control systems are installed complete and operable.

3. Proper thermal overload protection is in place for electrical equipment.

4. Final filters are clean and in place. If required, install temporary media in addition to final filters.

5. Duct systems are clean of debris.

6. Fans are rotating correctly.

7. Air coil fins are cleaned and combed.

8. Access doors are closed and duct end caps are in place.

9. Air outlets are installed and connected.

10. Duct system leakage is minimized.

11. Hydronic systems are flushed, filled, and vented.

12. Pumps are rotating correctly.

13. Proper strainer baskets are clean and in place.

14. Service and balance valves are open.

B. Submit field reports. Report defects and deficiencies noted during performance of services which prevent system balance.

C. Beginning of work means acceptance of exiting conditions.

1.3. QUALIFICATIONS OF THE BALANCE AGENCY

A. The balancing agency shall be a member of the Associated Air Balance Council (AABC) and have an engineer certified by the National Examining Board.

B. The certified test and balance engineer shall be responsible for supervision and certification for the total work herein specified.

C. All final reports shall be signed and officially stamped by the certified test and balance engineer.

1.4. PRE-BALANCING CONFERENCE

A. Convene a conference one week prior to commencing work of this Section with all appropriate individuals.

1.5. STANDARDS

A. The balancing agency shall perform the services specified herein in accordance with the Associated Air Balance Council's National Standards, including revisions, to the date of the contract.

B. All terms in this specification shall have their meaning defined as stated in the National Standards.

C. ADC: Test Code for grilles, registers, and diffusers.

D. ASHRAE III: Practice for measurement, testing, adjusting and balancing of building heating, ventilation, air conditioning, and refrigeration systems.

E. NEBB: Procedure standards for testing, adjusting, and balancing of environmental systems.

F. SMACNA: HVAC systems testing, adjusting, and balancing.

G. AABC: Associated Air Balance Council

1.6. COORDINATION

A. It will be necessary for the balancing agency to perform its services in close coordination with the mechanical contractor.

B. The plans and specifications have indicated meters, valves, dampers, and other devices for the purpose of adjusting the system to obtain optimum operating conditions. It will be the responsibility of the mechanical contractor to install these devices in a manner that will leave them accessible and readily adjustable. The balancing agency shall provide guidance if there is a questionable arrangement of a control or balancing device.

C. The mechanical contractor, temperature control contractor and suppliers of the HVAC equipment shall all cooperate with the balancing agency to provide all necessary data on the design and proper application of the system components.

1.7. INSTALLATION TOLERANCE

A. Unless otherwise indicated, all air devices shall be adjusted to within plus or minus 10 percent of design. All fans shall be adjusted to within plus or minus 5 percent of design. All pumps and Hydronic equipment shall be adjusted to within plus or minus 5 percent of design.

1.8. RESPONSIBILITIES OF THE MECHANICAL CONTRACTOR

A. The mechanical contractor shall sufficiently complete the installation and start all HVAC systems to insure they are working properly and shall perform all other items as described hereinafter to assist the balancing agency in performing the testing and balancing of the HVAC system.

B. Record equipment manufacturer's standard start-up information and submit to Engineer for review. Testing and balancing work shall not commence on any equipment until start-up reports have been completed, reviewed by Engineer, and forwarded to Testing and Balancing Agency.

C. Air Distribution Systems

1. Verify installation for conformity to design.

2. Terminate all supply, return, outside air, exhaust air, relief air, ventilation air ducts, and pressure test them for leakage. Test pressure and leakage rate shall be as specified in Division 23 Section, *HVAC Air Distribution System* under Leakage Tests. Pressure testing shall be performed by mechanical contractor and witnessed by Test and Balance Engineer.

3. Ensure that all volume dampers, are properly located and functional. Dampers serving requirements of minimum and maximum outside - return - relief, and exhaust air shall provide tight closure and full opening, with a smooth and free operation.

4. Verify that all supply - return - exhaust and transfer grilles; registers, and diffusers are installed and operational.

5. Ensure that air-handling systems, units, and associated apparatus, such as heating and cooling coils, filter sections, access doors, etc., are blanked and/or sealed to eliminate excessive bypass or leakage of air.

6. Ensure that all fans are operating and free of vibration. All fans and drives shall be checked for proper fan rotation and belt tension. Overload protection shall be of proper size and rating. A record of motor current and voltage shall be made to verify that the motors do not exceed nameplate rating. Record thermal overload ratings for all motors in the Test and Balance Report.

7. Make any necessary changes to the sheaves, belts, and dampers, as required by the balancing agency, at no additional cost to the owner.

8. Install clean filters.

D. Water Circulating Systems

1. Verify installation for conformity to design.

2. Check all pumps to verify pump alignment and rotation.

3. Ensure that systems are clean, with the proper strainer screens installed for normal operation.

4. Check all pump motors for current and voltage, to ensure that motors do not exceed nameplate rating.

5. Provide thermal overload protection of proper size and rating. Record thermal overload ratings for all motors. Insert data in Test and Balance Report.

6. Ensure that all water circulating systems shall be full and free of air; that expansion tanks are set for proper water level; and that all air vents were installed at high points of systems and are operating.

1.9. RESPONSIBILITIES OF THE TEMPERATURE CONTROL CONTRACTOR

A. The temperature control contractor shall complete the installation of the temperature control system, and operate and test all control systems to ensure they are functioning properly as designed. The temperature control contractor shall assist the balancing agency in testing and balancing the HVAC systems, as described hereinafter.

1. Verify that all control components are installed in accordance with project requirements and are functional, including all electrical interlocks, damper sequences, air and water reset, freeze stats and duct smoke detectors.

2. Verify that all controlling instruments are calibrated and set for design operating conditions.

3. Calibrate temperature sensors after installation, and before the temperature sensors control verification tests are performed. The balancing agency shall prove the accuracy of final settings by taking temperature readings. The readings shall be in a typical conditional space for each separately controlled zone.

4. The temperature control contractor shall allow sufficient time in the project to provide assistance and instruction to the balancing agency in the proper use and setting of control components such as, but not limited to, computers, static pressure controllers, or any other device that may need set points changed so that the testing and balancing work can be performed.

5. The temperature control contractor shall assist the balancing agency in the testing of VAV boxes and fume hood terminal units. The temperature control contractor shall make available to the balancing agency the use of a portable service terminal for use in balancing VAV boxes and fume hood terminal units.

B. All control sequences, software, equipment, and components shall be started-up by a qualified technician. Start-up report shall be submitted to Engineer prior to the commencement of testing and balancing work. Testing and balancing shall not commence until start-up reports are completed, reviewed by Engineer and forwarded to Testing and Balancing Agency.

1.10. NOTIFICATION FOR TESTING AND BALANCING WORK TO BEGIN

A. The mechanical contractor shall notify the balancing agency in writing when all heating, ventilating, and air conditioning systems are complete and ready for testing and balancing. The mechanical contractor shall attest that he has completed all items as herein described.

B. The following must be completed prior to start of system balancing:

1. All duct work and associated grilles/registers/diffusers installed and completed.

2. Piping systems completed, flushed and filled.

3. Equipment properly started by qualified personnel or start-up technicians.

4. Ceiling tiles installed.

5. Automation system (temperature controls) installed and completed for both air and water systems.

6. All equipment controlled in automatic ("Auto") mode.

7. Access granted to the balancing contractor to the automation/controls system provided.

1.11. DEFICIENCIES

A. Any deficiencies in the installation or performance of a system or component observed by the TAB agency shall be brought to the attention of the appropriate responsible person.

B. The work necessary to correct items on the deficiency listing shall be performed and verified by the affected Contractor before the TAB Agency returns to retest. Unresolved deficiencies shall be noted in the final report.

1.12. ADJUSTING

A. Ensure recorded data represents actual measured observed conditions.

B. Permanently mark settings of valves, dampers, and other adjustment devices allowing settings to be restored. Set and lock memory stops.

C. After adjustment, take measurements to verify balance has not been disrupted or that such disruption has been rectified.

D. Leave systems in proper working order, replacing belt guards, closing access doors, closing doors to electrical switch boxes, and restoring all sensors to specified settings.

E. At final inspection, recheck random selections of data recorded in report. Recheck points or areas as selected and witnessed by the Owner.

F. Check and adjust systems approximately six months after final acceptance and submit report.

G. Permanently mark the locations of all duct traverses on the exterior surface of the duct insulation.

1.13. ALTERNATES

A. Refer to Division 01 Section, *Alternates* for description of work under this section affected by alternates.

1.14. GENERAL COMMISSIONING REQUIREMENTS

A. Refer to Division 01 Section, "General Commissioning" for description of work under this Division affected by General Commissioning.

PART 2. PRODUCTS (NOT APPLICABLE)

PART 3. EXECUTION

3.1. GENERAL

A. Perform all testing and balancing in complete accordance with AABC National Standards for Field Measurements and Instrumentation.

B. Furnish all test instruments and equipment. All instruments must have been calibrated within twelve (12) months prior to use and shall be checked for accuracy prior to and during the work. Submit certificate for calibration of all equipment utilized on project with date of calibration clearly identified.

C. Review all systems designs and equipment, manufacturers' data, and be completely familiar with the work before proceeding.

D. Report all malfunctions or deficiencies to the contractor so that corrective action can be taken. Test and Balance Report shall not be submitted for review until all malfunctions or deficiencies are corrected. Repeat tests where required until design conditions are achieved.

E. Where systems or equipment cannot be balanced or adjusted to design conditions, determine the cause and submit a complete report to the Engineer.

F. Retest or rebalance the system as required during the warranty period.

G. Test and balance all systems under adequate load condition. If, in the opinion of the Engineer, there is insufficient load to properly test and balance the systems, perform sufficient preliminary balancing and adjustment to permit operation of the systems until such time as final testing and balancing can be done. Provide in writing the future date when systems shall be tested under sufficient load.

H. At project completion provide a complete set of ½ scale drawings indicating the locations of all duct traverses.

3.2. EXAMINATION

A. Examine the Contract Documents to become familiar with Project requirements and to discover conditions in systems' designs that may preclude proper TAB of systems and equipment.

B. Examine systems for installed balancing devices, such as test ports, gage cocks, thermometer wells, flow-control devices, balancing valves and fittings, and manual volume dampers. Verify that locations of these balancing devices are accessible.

C. Examine the approved submittals for HVAC systems and equipment.

D. Examine design data including HVAC system descriptions, statements of design assumptions for environmental conditions and systems' output, and statements of philosophies and assumptions about HVAC system and equipment controls.

E. Examine ceiling plenums used for supply, return, or relief air to verify that they meet the leakage class of connected ducts and are properly separated from adjacent areas. Verify that penetrations in plenum walls are sealed and fire-stopped if required.

F. Examine equipment performance data including fan and pump curves.

1. Relate performance data to Project conditions and requirements, including system effects that can create undesired or unpredicted conditions that cause reduced capacities in all or part of a system.
2. Calculate system-effect factors to reduce performance ratings of HVAC equipment when installed under conditions different from the conditions used to rate equipment performance. To calculate system effects for air systems, use tables and charts found in AMCA 201, "Fans and Systems," or in SMACNA's "HVAC Systems – Duct Design". Compare results with the design data and installed conditions.

G. Examine system and equipment installations and verify that field quality-control testing, cleaning and adjusting specified in individual Sections have been performed.

H. Examine test reports specified in individual system and equipment Sections.

I. Examine HVAC equipment and filters and verify that bearings are greased, belts are aligned and tight, and equipment with functioning controls is ready for operation.

J. Examine terminal units, and verify that they are accessible and their controls are connected and functioning.

K. Examine strainers. Verify that startup screens are replaced by permanent screens and indicated perforations.

L. Examine three-way valves for proper installation for their intended function of diverting or mixing fluid flows.

M. Examine heat-transfer coils for correct piping connections and for clean and straight fins.

N. Examine system pumps to ensure absence of entrained air in the suction piping.

O. Examine operating safety interlocks and controls on HVAC equipment.

P. Report deficiencies discovered before and during performance of TAB procedures. Observe and record system reactions to changes in conditions. Record default set points if different from indicated values.

3.3. AIR SYSTEM PROCEDURES

A. The balancing agency shall perform the following testing and balancing functions in accordance with the Associated Air Balance Council's National Standards:

1. Fan Speeds - Test and adjust fan RPM to achieve design CFM requirements.

2. Current and Voltage - Measure and record motor current and voltage. Check and record thermal overload ratings for all motors.

3. Pitot-Tube Traverse - Perform a Pitot-tube traverse of main supply, return and exhaust ducts to obtain total CFM. If a Pitot-tube traverse is not practical, the summation of the outlets or inlets may be used. An explanation why a traverse was not made must appear on the appropriate data sheet.

4. Outside Air - Test and adjust system minimum outside air by Pitot-tube traverse. If a Pitot-tube traverse is not practical, the percentage of outside air may be determined by calculations from the return air, outside air, and mixed air temperatures. Make allowances for heat of compression and motor heat where applicable.

5. Static Pressure - Test and record system static pressures, including suction and discharge static pressure of each fan. Record hood static pressure at fume hoods and similar equipment. Measure static air pressure conditions on air supply units, including filter and coil pressure drops, and total pressure across the fan. Make fan RPM allowances for 50 percent loading of filters.

6. Air Temperature - Take wet-bulb and dry-bulb air temperatures on the entering and leaving side of each cooling coil and/or heat recovery coil. Dry-bulb temperature shall be taken on the entering and leaving side of each heating coil.

7. Zone Ducts - Adjust zone ducts to within design CFM requirements. At least one zone balancing damper shall be completely open.

8. Main Ducts - Adjust main ducts to within design CFM requirements and traverse for total CFM quantities.

9. Branch Ducts - Adjust branch ducts to within design CFM requirements. Multi-diffuser branch ducts shall have at least one outlet or inlet volume damper completely open.

10. Magnahelic Gauges - Static pressure at static pressure tips for Magnahelic gauges shall be recorded in Test and Balance Reports.

11. Tolerances - Test and balance each diffuser, grille, and register to within 10 percent of design requirements. Test and balance all fans to within 5 percent of design requirements.

12. Identification - Identify the location and area of each grille, diffuser, register, and terminal box. This information shall be recorded on air outlet data sheets.

13. Description - Record the size, type, and manufacturer of each diffuser, grille, and register on air outlet data sheets.

14. Minimizing Drafts - Adjust all diffusers, grilles, and registers to minimize drafts in all areas.

15. Test and Balance Engineer shall witness and record all leakage testing of ductwork. Leakage test data shall be included in final Test and Balance Reports.

16. Set volume regulators on all terminal boxes to meet design maximum and minimum CFM requirements. Calibrate all terminal box air flow rates with automatic temperature control system.

17. Where modulating dampers are provided, take measurements and balance at extreme conditions. Balance variable air volume systems at maximum air flow rate, full cooling, and at minimum airflow rate, full heating.

18. Measure temperature conditions across outside air, return air, and exhaust dampers to check leakage.

3.4. WATER SYSTEM PROCEDURES

A. The various water circulating systems shall be filled, purged of air, and put into operation before hydronic balancing by the mechanical contractor.

B. The flow of water through all coils shall be adjusted by manipulating balancing valves until the rated pressure drop through the coil or metering device is obtained. Perform balancing by measurement of temperature differential in conjunction with air balancing.

C. The balancing agency shall perform the following testing and balancing functions in accordance with the AABC National Standards.

D. All Hydronic equipment, domestic re-circulating pumps, and HVAC pumps shall be Tested and Balanced as described below:

1. Water Treatment - Examine the water in the system and determine if the water has been treated and cleaned. If it has not, request the mechanical contractor to clean and treat the water prior to TAB work

2. Strainers - Request that the mechanical contractor clean all strainers.

3. Air Vents - Check all air vents at the high points of the water system and determine if they are installed and operating.

4. Valves - Set all balancing valves to the full-open position for balancing.

5. Pumps - Adjust all pumps and domestic hot water re-circulating water pumps to meet design GPM requirements. Check pumps for proper operation. Pumps shall be free of vibration and cavitation. Measure and record operating current and voltage. Check and record thermal overloads installed on all pumps. Record in Test and Balance Report.

6. Tolerances - Proceed to balance all coils, pumps, balance valves to within 5 percent of design requirements.

7. Marking - Mark all settings and record all data after completing the flow readings and coil adjustments.

8. Where available pump capacity (due to diversity) is less than total flow requirements or individual system parts, full flow in one part may be simulated by temporary restriction of flow to other parts.

E. Coils:

1. Tolerances - Test, adjust, and balance all hydronic coils within 5 percent of design requirements.

2. Verification - Verify the type, location, final pressure drop and GPM of each coil. This information shall be recorded on coil data sheets.

3.5. TESTING AND BALANCING OF EXISTING SYSTEMS

A. The balancing agency shall perform testing and balancing of existing air handling, fan and pump systems to the extent indicated. Existing air devices and terminals shall be re-tested and balanced where effected by new ductwork modifications.

B. Test and Balance Agency shall assist the mechanical contractor in selection of new sheaves and belts, if required. Re-sheaving of existing air handling units or fans shall be done at no additional cost to owner. Where required, new sheave and belt size calculations shall be forwarded to the Engineer for review and approval.

C. The Test and Balance Agency shall perform air system procedures (here-in before specified) on the following existing systems.

1. Existing Air Handling Units #1
2. Existing VAV Terminal Units (Associated with AHU-1)
3. Existing Return Air Fan #1

D. The Test and Balance Agency shall perform water system procedures (here-in before specified) on the following hydronic systems.

1. Existing Air Handling Unit #1
2. Existing Hot Water Pumps
3. Existing VAV Terminal Unit Hot Water Coils (Associated with AHU-1)
4. Existing Chilled Water Pumps

5. Provide temperature measurements across all existing coils.

3.6. FUME HOOD TESTING AND BALANCING

A. General: The testing and balancing agency shall perform all required testing and balancing as previously described in "Air Balancing Procedures" for the fume hood exhaust fans.

B. Fume Hood Air Volume and Face Velocity: The testing and balancing agency shall conduct a performance test to determine the hood air volume and face velocity as described below for each fume hood.

1. Test the operation of the sash. Use one hand to grip the sash at the extreme right side and raise and lower the sash. Repeat at the extreme left side. The sash should glide smoothly and freely and hold at any height without creeping. If the hood has a vertical moving sash, set it in the full open or in the "as used" position. If the hood has a combination sash, close the vertical sash and position the horizontal sash to get the maximum face opening or set it in the "as used" position. "As used" position of all fume hoods shall be 18 inches above the work surface, unless otherwise noted.

2. Traverse the exhaust duct using a manometer or anemometer to determine total volume of air through the hood. Calculate the total air volume in cubic feet per minute by multiplying the area of the duct by the average duct velocity (Q=AV). Take static pressures in the exhaust duct at the collar and compare with design static pressure loss through the fume hood. Record the readings. Any holes drilled for testing must be sealed as specified by the engineer or equipment manufacturer.

3. Divide the hood face into a grid using the vertical and horizontal dimensions to get equal areas over the cross section of the sash opening. Establish the center of each area. The maximum distance between the centers should not exceed 6 inches. Make a sketch showing area centers.

4. Traverse the sash opening using an anemometer to take a velocity reading at each center point. Record the readings. The hood fails the test if the minimum reading at any point on the traverse is less than 80percent of the average face velocity.

5. Calculate the average face velocity in feet per minute. Compare the average face velocity with design specifications.

6. Calculate the volume of exhaust air in cubic feet per minute at the hood face by multiplying the square feet of the sash opening by the calculated average face velocity (Q-AV).

7. Compare with the air volume taken at the exhaust duct traverse point. Record hood static pressure at location of Magnahelic gauge static pressure tip and record in TAB Report.

8. Place a certificate showing test results on the fume hood.

C. Smoke Test Procedures: The testing and balancing agency shall conduct a smoke test to determine each fume hood's performance as described below:

1. Make a complete traverse of the hood face with either titanium tetrachloride on a cotton swab, a smoke candle or a smoke tube. Determine that a positive air flow is entering the hood over the entire face. Use a smoke tube, a smoke candle, or swab a stripe of titanium tetrachloride on pieces of tape to produce the necessary amount of smoke. Direct the smoke at the following test locations:

   a). Along both sides, the top and the work surface of the hood about 6 inches behind and parallel to the hood face.

   b). Along the back panel and the baffle of the hood.

   c). Around any equipment in the hood.

2. Verify that all smoke is carried to the back of the hood and exhausted. The hood fails the test if visible smoke flows out the front of the hood. Reverse air flows or dead air spaces are not permitted.

3. With the sash open, ignite a smoke candle within the hood enclosure to observe the exhaust capacity of the hood. All smoke should flow quickly and directly to the back of the hood and be exhausted. Set the candle on the work surface and close the sash. With the sash closed, the hood must have enough air to dilute and exhaust the smoke. The hood fails the test if visible smoke flows out the front of the hood. Reverse air flows or dead air spaces are not permitted.

4. Place a pan of hot water in the center of the work area and add enough chunks of dry ice to the hot water to form a large volume of heavy white smoke. All smoke should flow directly to the back of the hood and be exhausted. The hood fails the test if visible smoke flows out the front of the hood. Reverse airflows or dead air spaces are not permitted.

5. The Test and Balancing Agency shall provide all equipment necessary for smoke test including:

   a). Smoke tubes

   b). Dry ice

   c). Titanium tetrachloride

   d). Cotton swabs

6. Results of smoke test to be included in Test and Balance Report.

7. Record all visual testing of fume hoods on a digital video recording device and forward recording to Engineer/Owner with final Test and Balance Report.

3.7. VERIFICATION OF TEMPERATURE CONTROL

A. The balancing agency shall be assisted by the temperature control contractor in verifying the operation and calibration of all temperature control systems. The following tests shall be conducted:

1. Verify that all control components are installed in accordance with project requirements and are functional, including all electrical interlocks, damper sequences, air and water reset.

2. Verify that all controlling instruments are calibrated and set for design operating conditions.

3. Verify the accuracy of the final settings by taking temperature readings. The readings shall be in a typical conditioned space for each separately controlled zone.

4. Test and calibrate all VAV boxes for proper air flow.

5. Test and calibrate all static pressure sensors for proper set point and control.

6. Test and calibrate all differential pressure sensors. Record set point in Record and Information Books.

3.8. BUILDING STATIC PRESSURE MEASUREMENTS

A. The balancing agency shall adjust supply, return and exhaust air systems to provide required static pressure relationships between spaces.

B. The balancing agency shall test, record, and adjust space pressurization by setting the design flows to meet the required flow direction and pressure differential.

C. The balancing agency shall measure and record static pressure differentials between spaces and relative to outside. The design static pressure and actual static pressure for each space shall be recorded.

D. Re-sheave air handling units, return air fans, and exhaust fans as required to obtain required room pressures.

3.9. TEST AND BALANCE REPORTS

A. The test and balance report shall be complete with logs, data, and records as required herein. All logs, data, and records shall be typed on white bond paper and bound. The report shall be certified accurate and complete by the balancing agency's certified test and balance engineer.

B. Six (6) copies of the test and balance report are required and shall be submitted to the Engineer. If, in the opinion of the Engineer, test results or portions thereof are incomplete or inconclusive, repeat necessary portions of the work to the satisfaction of the Engineer.

C. The report shall contain the following general data in a format selected by the balancing agency:

1. Project Number
2. Contract Number
3. Project Title
4. Project Location
5. Project Mechanical Engineer
6. Test & Balance Agency
7. Test & Balance Engineer
8. Mechanical Subcontractor
9. Dates tests were performed
10. Certification
11. Duct Leakage Tests
12. Phone Numbers of all Individuals Listed Above

D. The test and balance report shall be recorded on report forms conforming to the recommended forms in the AABC National Standards.

3.10. TEST REPORT FORMS

A. Air Moving Equipment and Fan Test Forms - Submit fan curve showing design and operating points of operation. Also, record the following on each air-handling equipment test form:

1. Manufacturer, model number, serial number, arrangement.
2. All design and manufacturer-rated data.
3. Total actual CFM by traverse if practical. If not practical, the sum of the outlets may be used, or a combination of each of these procedures. For specific systems, such as ones with diversity, see the AABC National Standards.
4. Suction and discharge static pressure of each fan, as applicable. Include pressure drops across coils, filters, mixing boxes, and similar devices.
5. Outside-air, return-air, and exhaust air total CFM.
6. Actual operating current, voltage and brake horsepower of each fan motor. For packaged equipment, this includes supply fans, relief air fans, and condenser fans.

7. Final RPM of each fan.

8. Fan and motor sheave manufacturer, model, size, number of grooves, bore, and center distance.

9. Belt size, quantity and make.

10. Static-pressure controls final operating set points (if applicable).

11. Total and external static pressure.

12. Room differential static pressures.

13. Room air change rates.

B. Pump Test Forms - Submit pump curve showing design, operating, and no-flow points of operation. Also, record the following items on each pump test form:

1. Manufacturer, size, model, service and serial number.

2. All design and manufacturer's rated data.

3. Pump operating suction and discharge pressure and final total dynamic head.

4. No flow (pump discharge valve closed) suction and discharge pressure and corresponding total dynamic head. This procedure is to determine actual impeller size. Record impeller size.

5. Rated and actual operating current, voltage, and brake horsepower of each pump motor.

6. Total operating head pressure.

7. Shutoff, discharge and suction pressures.

8. Shutoff, total head pressure.

C. Heating and Cooling-Coil Test Forms - Record the following items on each test form:

1. Manufacturer, location, service.

2. All design and manufacturer's rated data.

3. Rated and actual water pressure drop through each coil and related GPM.

4. Rated and actual static pressure drop across each coil.

5. Rated and actual entering and leaving water temperatures across each coil.

6. Wet-bulb and dry-bulb temperatures entering and leaving each cooling coil; dry-bulb temperatures entering and leaving each heating coil.

7. Air flow (Design and Actual).

D. Electric Motors Test Forms: (Applies to all motors, including pumps, fans and HVAC equipment)

1. Manufacturer.

2. Model/Frame.

3. HP/BHP.

4. Phase, voltage, amperage; nameplate, actual, no load.

5. RPM.

6. Service factor.

7. Starter size, rating, heater elements.

8. Sheave Make/Size/Bore.

9. Thermal overload settings

E. V-Belt Drive Test Forms:

1. Identification/location.

2. Required driven RPM.

3. Driven sheave, diameter and RPM.

4. Belt, size and quantity.

5. Motor sheave diameter and RPM.

6. Center to center distance, maximum, minimum, and actual.

F. Duct Traverse Test Forms:

1. System zone/branch.

2. Duct size.

3. Area.

4. Design velocity.

5. Design air flow.

6. Test velocity.

7. Test airflow.

8. Duct static pressure.

9. Air temperature.

10. Air correction factor.

G. Duct Leakage Test Forms:

1. Description of ductwork under test.

2. Duct design operating pressure.

3. Duct design test static pressure.

4. Duct capacity, air flow.

5. Maximum allowable leakage duct capacity times leak factor.

6. Test apparatus.

a). Blower.

b). Orifice, tube size.

c). Orifice size.

d). Calibrated.

7. Test static pressure.

8. Test orifice differential pressure.

9. Leakage.

H. Terminal Unit Data Test Forms:

1. Manufacturer.

2. Type, constant, variable, single, dual duct.

3. Identification/number.

4. Location.

5. Model number.

6. Size.

7. Minimum static pressure.

8. Minimum design air flow.

9. Maximum design air flow.

10. Minimum actual air flow.

11. Maximum actual air flow.

12. Inlet static pressure.

I. Air Distribution Test Sheet:

1. Air terminal number.

2. Room number/location.

3. Terminal type.

4. Terminal size.

5. Area factor.

6. Design velocity.

7. Design air flow.

8. Test (final) velocity.

9. Test (final) air flow.

10. Percent of design air flow.

END OF SECTION

DIVISION 23 SECTION 230600
HEATING, VENTILATING AND AIR CONDITIONING EQUIPMENT
TABLE OF CONTENTS

PART 1. GENERAL

1.1. GENERAL
1.2. DESCRIPTION
1.3. SUBMITTALS
1.4. OPERATION AND MAINTENANCE DATA
1.5. DELIVERY, STORAGE, AND HANDLING
1.6. ENVIRONMENTAL REQUIREMENTS
1.7. ALTERNATES
1.8. EXTRA MATERIALS

PART 2. PRODUCTS

2.1. FANS
2.2. FUME HOODS (8 FT. LABCONCO HOOD W/BASE CABINETS)
2.3. FUME HOOD EXHAUST FAN (VERTICAL IN-LINE WITH INTEGRAL DISCHARGE NOZZLE)
2.4. IN-LINE CIRCULATING PUMPS
2.5. VARIABLE SPEED DRIVES
2.6. TERMINAL AIR UNITS - NON FAN POWERED
2.7. FUME HOOD EXHAUST TERMINAL AIR UNITS

PART 3. EXECUTION

3.1. EXAMINATION
3.2. GENERAL INSTALLATION REQUIREMENTS
3.3. FIELD QUALITY CONTROL
3.4. DEMONSTRATION
3.5. CLEANING
3.6. EXISTING AIR HANDLING UNIT INSTALLATION REQUIREMENTS
3.7. FAN INSTALLATION REQUIREMENTS
3.8. HVAC PUMP INSTALLATION REQUIREMENTS
3.9. VAV EQUIPMENT INSTALLATION REQUIREMENTS

SECTION 230600 - HEATING, VENTILATING, AND AIR CONDITIONING EQUIPMENT

PART 1 GENERAL

1.1 GENERAL

A. The Conditions of the Contract and other General Requirements apply to the work specified in this section. All work under this section shall also be subject to the requirements of Division 23 Section, *Common Work Results for HVAC* and Division 01 Section *General Requirements.*

1.2 DESCRIPTION

A. The work to be performed shall include all labor, materials and equipment necessary to furnish and install complete, all mechanical equipment as shown on drawings, hereinafter specified or reasonably implied, and leaving the same in satisfactory operation condition. It is the intent that systems be installed complete with all items necessary to accomplish this purpose.

1.3 SUBMITTALS

A. Shop Drawings: Indicate assembly, equipment dimensions, weight loading, required clearances, construction details, field connection details, and electrical characteristics and connection requirements.

B. Product Data:

1. Provide literature which indicates dimensions, weights, capacities, ratings, performance, gages and finishes of materials, and electrical characteristics and connection requirements.
2. Provide data of filter media, filter performance data, filter assembly, and filters frames.
3. Provide fan and pump curves with specified operating point clearly plotted.
4. Submit sound power level data for both fan outlet and casing radiation at rated capacity. Submit sound power levels by octave band or sound pressure levels by octave band for all equipment.
5. Submit electrical requirements for power supply wiring including wiring diagrams for interlock and control wiring, clearly indicating factory-installed and field-installed wiring.
6. For fume hood exhaust fans provide nozzle velocity of exhaust fan, total exhaust flow, and discharge plume height.

1.4 OPERATION AND MAINTENANCE DATA

A. Maintenance Data: Include instructions for lubrication, filter replacement, motor and drive replacement, spare parts lists, and wiring diagrams.

1.5 DELIVERY, STORAGE, AND HANDLING

A. Deliver, store, protect and handle products to site under provisions of General Requirements.

B. Accept products on site in factory-fabricated protective containers, with factory-installed shipping skids and lifting lugs. Inspect for damage.

C. Store all equipment in clean dry place and protect from weather and construction traffic. Handle carefully to avoid damage to components, enclosures, and finish.

D. Comply with manufacturer's installation instructions for rigging, unloading and transporting equipment.

E. Protect all motors, shafts, and bearings from weather and construction dust.

1.6 ENVIRONMENTAL REQUIREMENTS

A. Do not operate any equipment for any purpose, temporary or permanent, until ductwork/piping is clean, filters/strainers are in place, bearings lubricated, and equipment has been test run under observation.

1.7 ALTERNATES

A. Refer to Division 01 Section, “Alternates” for description of work under this section affected by alternates.

1.8 EXTRA MATERIALS

A. Provide one set of seals for each type and model of pump provided on the project.

PART 2 PRODUCTS

2.1 FANS

A. General

1. Provide fans as indicated on the drawings. All fans shall have been tested and their performance rated in accordance with Air Movement and Control Association, Inc., Bulletin 210-85 Test Code and shall be licensed to bear the AMCA Seal. All fans shall carry the AMCA Certified Rating Seal for air and sound. Sound power levels shall be submitted for approval. Fan curves shall be submitted with all fan shop drawings.

2. Fan manufacturer shall submit under what duct configuration (unducted, partially ducted, or ducted) the manufacturer certified the performance of a particular fan or group of fans.

3. When indicated on Contract Drawings provide inverter duty rated motors for all variable speed fans.

B. Upblast Centrifugal Roof Exhauster (Belt Drive, Non Grease Applications)

1. Provide and install belt drive upblast centrifugal roof exhauster of the size, performance, and electrical characteristics as indicated on contract drawings.

The upblast exhaust fan shall be installed on a insulated roofcurb.

2. Roof exhaust fans shall be upblast centrifugal belt driven type. The fan wheel shall be centrifugal backward inclined, constructed of aluminum and shall include a wheel cone carefully matched to the inlet cone for precise running tolerances. Wheels shall be statically and dynamically balanced. The fan housing shall be constructed of heavy gauge aluminum with a rigid internal support structure. Windbands shall have a rolled bead for added strength and shall be joined to curbcaps with a welded seam.

3. Motors shall be heavy duty ball bearing type, carefully matched to the fan load, and furnished at the specified voltage, phase and enclosure. Motors and drives shall be mounted on vibration isolators, out of the airstream. Fresh air for motor cooling shall be drawn into the motor compartment from an area free of discharge contaminants. Motors shall be readily accessible for maintenance. Drive frame assemblies shall be constructed of heavy gauge steel and mounted on vibration isolators. Motors shall be two (2) speed type or explosion proof where indicated on contract drawings.

4. Precision ground and polished fan shafts shall be mounted in permanently sealed, lubricated pillow block ball bearings. Bearings shall be selected for a minimum (L50) life in excess of 200,000 hours at maximum cataloged operating speed. Drives shall be sized for a minimum of 150 percent of driven horsepower. Pulleys shall be of the fully machined cast iron type, keyed and securely attached to the wheel and motor shafts.

5. Motor pulleys shall be adjustable for final system balancing. A disconnect switch shall be factory installed and wired from the fan motor to a junction box installed within the motor compartment. A conduit chase shall be provided through the curb cap to the motor compartment for ease of electrical wiring. All fans shall bear the AMCA Certified Ratings Seal for sound and air performance.

6. The upblast exhaust fans shall be provided with 2-inch aluminum birdscreen 12-inches high, fully insulated, aluminum roof curb. Fan and roof curb shall be provided by the same manufacturer.

7. Motor operated dampers shall be provided by ATC subcontractor and installed by mechanical contractor.

8. Exhaust fans shall be Model CUE as manufactured by Greenheck, Acme Engineering, Penn Ventilator, Cook, Twin City Fan and Blower or approved equal.

2.2 FUME HOODS (8 FT. LABCONCO HOOD W/BASE CABINETS)

A. Furnished by owner, install under this Division.

B. Fume Hood General Design Requirements:

1. Fume hoods shall function as ventilated, enclosed work spaces, designed to capture, confine and exhaust fumes, vapors and particulate matter produced or

generated within the enclosure.

2. Design fume hoods for consistent and safe air flow through the hood face. Negative variations of face velocity shall not exceed 20 percent of the average face velocity at any designated measuring point as defined in this section.

3. Average illumination of work area: Minimum 80 foot candles. Work area shall be defined as the area inside the superstructure from side to side and from face of baffle to the inside face of the sash, and from the working surface to a height of 28 inches.

4. Fume hood shall be designed to minimize static pressure loss with adequate slot area and bell shaped exhaust collar configuration. Maximum average static pressure loss readings taken three diameters above the hood outlet from four points, 90 degrees apart, shall not exceed the following maximums with sash in full open position:

Face Velocity	**Measured S.P. L. (W.G.)**
75 F.P.M.	.18 inches
100 F.P.M.	.30 inches
125 F.P.M.	.45 inches
150 F.P.M.	.60 inches

5. Fume hood shall maintain essentially constant exhaust volume at any baffle position for safety. Maximum variation in exhaust CFM, static pressure and average face velocity as a result of baffle adjustment shall not exceed 5 percent for any baffle position at the specified face velocity.

6. Fume hoods shall be field convertible, from bypass type to auxiliary air by simple component replacement or addition. Change-over shall be accomplished without construction modifications and without special tools.

7. Noise Criteria: Test data of octave band analysis verifying hood is capable of a 50 NC value when connected to a 50 NC HVAC source. Reading taken 3' in front of open sash at 110 fpm face velocity.

C. Submittals

1. Shop Drawings: Indicate equipment locations, large scale plans, elevations, cross sections, rough-in and anchor placement dimensions and tolerances and all required clearances.

2. Product Data: Submit manufacturer's data for each component and item of laboratory equipment specified. Include component dimensions, configurations, construction details, joint details, and attachments, utility and service requirements and locations.

3. Samples: Submit 3 x 6 inch samples of finish for fume hood, work surfaces and for other pre-finished equipment and accessories for selection by Owner.

4. Test Reports: Submit test reports on each size and type of hood verifying conformance to test performances specified. Test report must accompany each hood as part of installation and usage package. Submit independent test reports as required by specification.

5. Instructions: Submit for review and approval
   a. Instructions to be inscribed on instruction plate to be attached to hood, as specified in Part 2 of this Section.
   b. Written instructions in booklet form providing additional details on safe and proper operation and maintenance.
   c. Professional quality video - minimum 15 minutes in length on proper hood usage.

D. Quality Assurance:

1. Single source responsibility: Fume hood and acid storage cabinet and accessories shall be manufactured or furnished by a single laboratory furniture company.

2. Manufacturer's qualifications: Modern plant with proper tools, dies, fixtures and skilled workmen to produce high quality laboratory casework and equipment, and shall meet the following minimum requirements:
   a. Five years or more experience in manufacture of laboratory casework and equipment of type specified.
   b. Ten installations of equal or larger size and requirements.

3. Installer's qualifications: Factory certified by the manufacturer.

E. Delivery Storage and Handling

1. Schedule delivery of equipment so that spaces are sufficiently complete that equipment can be installed immediately following delivery.

2. Protect finished surfaces from soiling or damage during handling and installation. Keep covered with polyethylene film or other protective coating.

3. Protect all work surfaces throughout construction period with 3-inch corrugated cardboard completely covering the top and securely taped to edges. Mark cardboard in large lettering "No Standing".

F. Project Conditions:

1. Do not deliver or install equipment until the following conditions have been met:

   a. Windows and doors are installed and the building is secure and weather tight.

   b. Ceiling, overhead ductwork and lighting are installed.

c. All painting is completed and floor tile located below casework is installed.

G. Manufacturer

1. Casework and equipment manufacturer: Labconio, 8811 Prospect Ave, Kansas City MO 64132.

H. Fume Hood Materials:

1. Steel: High quality, cold rolled, mild steel meeting requirements of ASTM A366; gauges U.S. Standard and galvanized.

2. Stainless steel: Type 304; gauges U.S. Standard.

3. Ceiling closure panels: Minimum 18 gauge; finish to match hood exterior.

4. Bypass grilles: Low resistant type, 18 gauge steel, upward directional louvers.

5. Safety glass: 7/32-inch thick laminated safety glass.

6. Sash cables: Stainless steel, uncoated, 1/8-inch diameter military spec. quality. (MIL-W-83420D-3)

7. Sash guides: Corrosion resistant poly-vinyl chloride.

8. Pulley assembly for sash cable: 2-inch diameter, zinc dichromate finish, ball bearing type, with cable retaining device. (Nylon tired-not acceptable.)

9. Sash pull: Full width corrosion resistant plastic, stainless steel or steel with chemical resistant powder coating.

10. Gaskets: 70 durometer PVC for interior access panels. Gasket interior access panels to eliminate air leakage and to retain liquids inside hood.

11. Fastenings:
    a. Exterior structural members attachments: Sheet metal screws, zinc plated.
    b. Interior fastening devices concealed. Exposed screws not acceptable. (Screw head "caps" not acceptable.)
    c. Exterior panel member fastening devices to be corrosion resistant, non-metallic material. Exposed screws not acceptable.

12. Instruction plate: Corrosion resistant or plastic plate attached to the fume hood exterior with condensed information covering recommended locations for apparatus and accessories, baffle settings and use of sash.

I. Fume Hood Construction

1. Superstructure: Rigid, self supporting assembly of double wall construction,

maximum 4-7/8-inches thick.

a. Wall consists of a sheet steel outer shell and a corrosion resistant inner liner, and houses and conceals steel framing members, attaching brackets and remote operating service fixture mechanisms and services. Panels must be attached to a full frame construction, minimum 14 gauge galvanized members. Panels and brackets attached to eliminate screw heads and metallic bracketing from hood interior.
b. Access to fixture valves concealed in wall provided by exterior removable access panels, gasketed access panels on the inside liner walls, or through removable front posts.

2. Exhaust outlet: Rectangular with ends radiuses, shaped and flanged, 18 gauge stainless steel exhaust collars welded in place. Provide stainless steel outlet with stainless steel liners.

3. Access opening perimeter: Air foil or streamlined shape with all right angle corners radiuses or angled. Bottom horizontal foil shall provide nominal one inch bypass when sash is in the closed position. Bottom foil shall be removable without use of special tools. Bottom foil shall provide access areas for electrical cords. Bottom foil: Steel with black powder coating or stainless steel to increase acid and abrasion resistance. Air foil and sill to extend no more than 1.5-inches in front of work surface on non-auxiliary air hoods to provide maximum aisle space and allow deeper usage.

4. Fume hood sash: Full view type with clear, unobstructed, side-to-side view of fume hood interior and service fixture connections.
   a. Bottom sash rail: 2-inch maximum, 18 gauge steel with powder coating finish. Provide integral formed, flush pull the full width of bottom rail.
   b. Set safety glass into rails in deep form, extruded poly-vinyl chloride glazing channels.
   c. Counter balance system: Single weight, pulley, cable, counter balance system which prevents sash tilting and permits one finger operation at any point along full width pull. Maximum 7 pounds pull required to raise or lower sash throughout its full length of travel. Design system to hold sash at any position without creep and to prevent sash drop in the event of cable failure. Life cycle test 100 pound sash and weight to 100,000 cycles without sign of failure. Provide independent test data.
   d. Postless sash design: Per drawing details.
   e. Open and close sash against rubber bumper stops.

5. Fume hood liner: Resisto-Roc (product number denoted by the suffix "R"): Nominal ¼-inch thick, dense, light gray monolithic sheet of chemically resistant, inorganic non-asbestos mixture of fiber cement. Liner shall have a "O" flame spread per ASTM E84 and longitudinal M.O.R. of 5,511 psi.

6. Baffles: Baffles providing controlled air vectors into and through the fume hood shall be fabricated of the same material as the liner. Provide exhaust slots full height on vertical sides of the baffle with upper and lower slots adjustable. Provide fixed, permanently open horizontal slot 17-inches above the work surface. Minimum depth of 19-inches for interior work space is required at the

extreme upper portion of the fume hood to provide maximum interior work area. All baffle supports/brackets to be non-metallic.

7. Multi-position fixed baffle: Slotted non-metallic baffle supports allow center baffle panel to be repositioned prior to hood operation permitting setting for (1) high thermal loading, (2) heavier than air gases or fumes generated near work surface, and (3) normal or average operation.
   a. Provide acid resistant label indicating proper baffle operation. Locate label on sidewall of hood interior next to slotted baffle support.
   b. Baffle designs which permit close-off of all slots are not acceptable.
   c. Must comply with OSHA Lab Standard Guidelines. (Easily reached/adjusted with only arm in hood.)
   d. Non-adjustable baffles and baffles that require the use of tools for adjustment or repositioning are unacceptable.
   e. Baffle designs with metallic supports or fasteners not acceptable.

8. Service fixtures and fittings: Color coded washers at hose nozzle outlets and valves mounted inside the fume hood and controlled from the exterior with color coded index handles.

   a. Valves: Needle point type with self-centering cone tip and seat of hardened stainless steel. Tip and seat shall be removable and replaceable.
   b. Provide piping for all service fixtures from valve to outlet: Galvanized iron or copper for water, air and vacuum and black iron for gas services.
   c. Fixtures exposed to hood interior: Brass with chemically resistant black vinyl coating.
   d. Remote control handles: Black nylon four-arm handle with nylon color-coded index buttons.
   e. Services: As shown or specified.

9. Service fixtures and fittings:

   a. Service treatment: Fittings are to be coated with a chemically resistant polyester powder lacquer electrostatically applied and backed on for a uniform finish. <u>Epoxy coatings are not acceptable.</u>
   b. Handle and outlet nozzle shall be color coded to the media, with the same polyester powder lacquer finish. Handles shall be metal with media identification text. Outlet nozzles shall be made of the same high quality brass as the valve bodies. Other materials may be in contact with media where appropriate.
   c. Provide piping for all service fixtures from valve to outlet: Galvanized iron or copper for water, air and vacuum and black iron for gas services.
   d. Fixture fittings shall incorporate quick-connect compression fittings on the valve body (for the media inlet and media outlet) as well as the fume hood outlet nozzle. With this system, <u>no soldering or brazing should be required to complete mechanical connections.</u>
   e. Fixtures exposed to fume hood interior. Brass with chemically resistant polyester powder lacquer color coded to the media.
   f. Fixtures are to be provided with easy-to-mount attachment device for secure mounting in deck or wall mounted applications. System to be installed with simple hand tools.

g. Fittings are to be constructed to operate with the following maximum working pressure without leak or failure.
   - C Water Fittings: 145 PSI
   - C Non-Burning Gas: 145 PSI
   - C Burning Gases: 100 PSI
   - C Special Water Fittings: 145 PSI
   - C Oxygen Fittings: 145 PSI

h. All outlets shall have detachable serrated nozzles.

i. All valves shall be front-loaded for ease of access and maintenance at point of use.

j. Furnish each hood with three remote controlled gas cocks.

k. Provide each hood with one remote controlled cold water faucet.

l. Furnish each hood with a cup sink.

10. Hood light fixture: Two lamp, rapid start, UL listed fluorescent light fixture with sound rated ballast installed on exterior of roof. Provide safety glass panel cemented and sealed to the hood roof.

    a. Interior of fixture: White, high reflecting plastic enamel.
    b. Size of fixture: Largest possible up to 48-inches for hoods with superstructures up to six feet. Provide two 36-inch fixtures for hoods with eight foot superstructures.
    c. Include lamps with fixtures.
    d. Illumination: Per performance values, Part 1 of this Section.

11. Electrical services: Three wire grounding type receptacles rated at 120 V.A.C. at 20 amperes. Provide 250 V.A.C. receptacles where specified. Flush plates: Black acid resistant thermoplastic.

12. Work surfaces: 1-1/4-inch thick surface, dished a nominal one-half inch to contain spills.
    a. Reinforced stainless steel work surfaces, either integral or attached, for hoods with stainless steel interiors.
    b. Molded resin work surfaces for hoods with Resisto-Roc or Poly-resin liners.

13. Air flow monitoring gauge (See Section 230600).

J. Metal Finish

1. Preparation: Spray clean metal with a heated cleaner/phosphate solution, pretreat with iron phosphate spray, water rinse, and neutral final seal. Immediately dry in heated ovens, gradually cooled, prior to application of finish.

2. Application: Electrostatically apply urethane powder coat of selected color and bake in controlled high temperature oven to assure a smooth, hard satin finish. Surfaces shall have a chemical resistant, high grade laboratory furniture quality finish of the following thicknesses:

    a. Exterior and interior surfaces exposed to view: 1.5 mil average and 1.2 mil minimum.

b. Backs of cabinets and other surfaces not exposed to view: 1.0 mil average.

K. Base Cabinets:
Furnish each fume hood with two (2) 36-inch wide steel acid storage cabinets. Each cabinet shall be specifically manufactured for storage of corrosive materials. Each cabinet shall contain flush front panel above cupboard. Lining and shelf surfaces shall be constructed of chemical-resistant resisto-roc lining. Unit dimension shall exactly match fume hood superstructure. Unit shall be provided with solid hinged doors with locks.

L. Factory Testing

1. Reverse Air Flows and Containment - each hood shall be tested as "As Manufactured" (AM). Each hood shall provide containment less than or equal to 00.10 ppm when tested per ASHRAE standard 110-85 and under the conditions specified below:

a. Test Criteria: The following test criteria shall apply when determining the As Manufactured performance rating.

Face velocity: 100 feet per minute (.51 m/a) + or – 10 percent
Ambient temperature: 68 to 74 degrees F

b. Containment per ASHRAE 110-85 - At a tracer gas release rate of 8 liters pre minute, the As Manufactured leakage shall not exceed 0.10 ppm (rating ' 8 AM 0.10)

c. Reverse air flow and dead air space - The following excerpt sections of ASHRAE 110-85 are used to define the As Manufactured test criteria for reverse air flow and exhaust capacity.

1). Reverse Air Flow and Dead Air Spaces - Swab a strip or titanium tetrachloride along both walls and the hood floor in a line parallel to the hood face and 6 inches (152 mm) back into the hood. (Titanium tetrachloride is corrosive to the skin and extremely irritating to the eyes and respiratory system.) Swab a large "A" on the back of the hood and on each side. Define air movement toward the face of the hood as reverse air flow and define lack of movement as dead air space. Swab the work top of the hood, making sure to swab lines around all equipment in the hood. All smoke should be carried to the back of the hood and out. Test the operation of the bottom air bypass air flow by running the cotton swab under the air foil. Before going on to the next test, move the cotton swab around I the face of the hood. If there is any outfall, the exhaust capacity test should not be made.

2). Exhaust Capacity. Ignite and place a 30-second smoke bomb near the center of the work surface, making sure that the hole on the side of the smoke bomb faces into the hood. After the smoke bomb begins to work, pick it up with tongs and move it around

in the hood. There should be not visual or odor indications of smoke outside the hood.

3). Installed Performance. See Section 15500 (Testing and Balancing) for field testing of fume hoods.

M. Installation

1. Installation

a. Install fume hoods and equipment in accordance with manufacturer's instructions.
b. Install equipment plumb, square, and straight with no distortion and securely anchored as required.
c. Secure work surfaces to casework and equipment components with material and procedures recommended by the manufacturer.

2. Accessory installation: Install accessories and fittings in accordance with manufacturer's recommendations.

N. Adjusting:

1. Repair or remove and replace defective work, as directed by Owner upon completion of installation.

2. Adjust sash, fixtures, accessories and other moving or operating parts to function smoothly.

O. Cleaning

1. Clean equipment, touch up as required.

P. Protection of Finished Work

1. Provide all necessary protective measures to prevent exposure of equipment from exposure to other construction activity.

2. Advise contractor of procedures and precautions for protection of material and installed fume hoods from damage by work of other trades.

2.3 FUME HOOD EXHAUST FAN (VERTICAL IN-LINE WITH INTEGRAL DISCHARGE NOZZLE)

A. Laboratory Fume Hood Exhaust Fans (Vertical In-Line Laboratory Fume Hood Fan With Integral Discharge Nozzle)

1. General

a. Base fan performance at standard conditions (density 0.075 Lb/ft^3).

b. Fans selected shall be capable of accommodating static pressure and flow

variations of +/-15% of scheduled values.

c. Each fan shall be belt driven.

d. Fans to be equipped with 316 stainless steel lifting lugs for corrosion resistance.

e. Fasteners exposed to corrosive exhaust shall be stainless steel.

f. Fan assembly shall be designed for a minimum of 125 MPH wind loading, without the use of guy wires.

g. Provide duplex fan arrangement with two (2) equally sized fans.

h. Fume hood exhaust fans shall be Greenheck Fan Corp Model Vektor – H, High plume laboratory exhaust system or approved equal.

2. Corrosion Resistant Coating

a. All fan and system components (fan, nozzle, wind band, plenum) shall be corrosion resistant coated with LabCoat™, a two part electrostatically applied and baked, sustainable, corrosion resistant coating system; or Heresite P-413C. Color to be selected by the Owner.

3. Fan Housing And Outlet

b. Fan housing to be aerodynamically designed with high-efficiency inlet, engineered to reduce incoming air turbulence.
c. Fan housing shall be welded steel with corrosion resistant coating. No uncoated metal fan parts shall be acceptable.
d. A high velocity conical discharge nozzle shall be supplied by the fan manufacturer and be designed to efficiently handle an outlet velocity of up to 6000 FPM.
e. Provide housing drain for removal of rain and condensation.
f. A bolted and gasketed access door shall be supplied in the fan housing allowing for impeller inspection or removal of impeller, shaft and bearings without removal of the fan housing.
g. Color selection by Owner.

4. Fan Impeller

a. Fan impeller shall be centrifugal, backward inclined, with non-stall characteristics. The impeller shall be electronically balanced both statically and dynamically per AMCA Standard 204.
b. Fan impeller shall be manufactured of aluminum (AMCA type B spark resistant), fully welded be provided with for corrosion resistant coating.

5. Support Curb

a. Exhaust system manufacturer shall supply a structural support curb for the fan, of specified height, as shown on the drawings.

b. Curb shall be fabricated of a minimum of 14 gauge corrosion resistant coated steel and structurally reinforced.
c. Curbs shall be insulated.
d. The standard curb/plenum/blower assembly shall withstand wind loads of up to 125 mph without additional structural support.

6. Fan Motors and Drive

a. Motors shall invertor duty rated be premium efficiency, standard NEMA frame, 1800 or 3600 RPM, TEFC with a 1.15 service factor. Motor maintenance shall be accomplished without fan impeller removal or requiring maintenance personnel to access the contaminated exhaust components.
b. Drive belts and sheaves shall be sized for 200% of the motor horsepower, and shall be readily and easily accessible for service, if required. Drive shall consist of a minimum of two belts under all circumstances.
c. Shaft to be polished and ground steel.
d. Fan shaft bearings shall be Air Handling Quality, ball or roller pillow block type and be sized for an L-10 life of no less than 100,000 hours. Bearings shall be fixed to the fan shaft using concentric mounting locking collars, which reduce vibration, increase service life, and improve serviceability.
e. All shaft bearings shall have extended lube lines with zerk fittings.
f. Provide factory or field installed shaft grounding rings on motor shafts as specified in Division 25, Section "Common Work Results for HVAC."

2.4 IN-LINE CIRCULATING PUMPS

A. Furnish and install in-line circulating pumps as shown on the contract drawings. Pump and motor shall be equipped with sleeve bearings for quiet operation. Pumps shall be suitable for up to 175 psi working pressure and up to 300 degrees F water temperature as per ASA B16.1. Pump rating curves shall be the result of testing and rating in accordance with the procedures of the Hydraulic Institute.

B. Pump motors shall be non-overloading throughout the range of the curves. Pumps shall have center-line discharge for positive venting, flanged bodies, and same size suction and discharge. Pumps shall incorporate a disc type lubrication system and be so designed that the bearing assembly can be removed in one piece. One bearing assembly shall be suitable for all sizes of the inline pumps furnished. Sump oil temperature may not exceed 180 degrees F when circulating 250 degrees F water with a 90 degree F ambient. Vent and drain openings at least 3 square inches in area and a water slinger shall be provided between the mechanical seal and bearing area. This water slinger shall be integral with shaft sleeve. All in-line circulating pumps shall be provided with all bronze construction when used in open system and shall be bronze fitted for closed system.

C. Provide gauge tappings on each pump flange.

D. Pump body shall be cast iron and pump shafts shall be alloy steel with cupro-nickel sleeve covering all wetted parts, and be coupled to the motor shaft by a noiseless non-metallic coupler. Impellers shall be one piece cast bronze, dynamically balanced. Pumps

shall have a two piece mechanical seal assembly easily replaceable without the use of special tools. Motors shall be resilient mounted, 1750 RPM, and require no external overload protection when used with single phase current.

E. Electrical characteristics shall be as scheduled on the contract drawings. Provide terminal lugs to match branch circuit conductor quantities, sizes, and materials indicated. Enclose terminal lugs in terminal box sized to NFPA-70.

F. In line pumps shall be Red Baron Series 110 in-line circulators or 1600 Series, as manufactured by Taco, Bell & Gossett, Thrush, Armstrong, Patterson, or as approved equal.

2.5 VARIABLE SPEED DRIVES

A. Provide variable speed drive controllers for fume hood exhaust fans as indicated on contract drawings.

B. The adjustable frequency controller (AFC) shall convert three phase 60 Hertz utility power to adjustable voltage and frequency, three phase, AC power for stepless motor control from 5 percent to 110 percent of base speed.

C. The AFC shall be a voltage source type with a PWM output utilizing power transistor semi-conductors.

D. The AFC together with all options and modifications shall mount within a standard NEMA 1 enclosure suitable for continuous operation at ambient temperature of 0 to 40 degrees C. with relative humidity to 95 percent non-condensing. All high voltage components within enclosure shall be isolated with steel covers. The complete unit shall be UL approved and UL labeled.

E. Circuits shall provide DV/DT and DI/DT protection for semi-conductors. AFC shall be capable of starting into a rotating load without delay. Protective circuits shall cause instantaneous trip (IET) should any of the following faults occur:

1. Motor overload.
2. Shortcircuit.
3. Motor overtemperature fault.
4. Reverse phase.
5. 110 percent of controller maximum sine wave current rating is exceeded.
6. Output phase to phase and phase to ground short circuit condition.
7. High input line voltage.
8. Low input line voltage.
9. Loss of input phase.
10. External fault. This protective circuit shall permit, by means of the terminal strip, wiring of remote NC safety contacts such as high static, firestat, etc., to shut down the drive.

F. The following adjustments shall be available in the controller and retained in non-volatile memory:

1. Maximum frequency (15 to 400 Hz) factory set at 60 Hz.

2. Minimum frequency (3 to 60 Hz) factory set at 6 Hz.
3. Acceleration (.1 to 360 seconds) factory set at 20 seconds.
4. Deceleration (.1 to 360 seconds) factory set at 20 seconds.
5. Volts/Hertz ratio factory set for 460V at 60 Hz.
6. Voltage offset or boost factory set at 100 percent torque.
7. Current limit (50 percent to 110 percent sine wave current rating) factory set at 100 percent current.

G. The AFC shall have the following basic features:

1. Door-mounted operators controls consisting of a membrane command center which allows manual stop/start and speed control, local/remote indication and manual/or automatic speed control selection. In addition, the command center shall serve as a means to configure controller parameters such as min speed, max speed, acceleration and deceleration times, Volts/Hz ratio, torque boost etc. Potentiometers shall not be allowed for these settings.

2. Main input disconnect to provide a positive disconnect between the controller and all phases of the incoming A-C line. This disconnect shall be mounted inside the controller enclosure and have through-the-door interlocking toggle with provisions for padlocking.

3. Electronic motor overload relay.

4. Automatic restart after power outage, drive fault or external fault, with drive in automatic mode. The circuit shall allow the user to select up to (10) restart attempts as well as the dwell time between attempts. The reset time between fault occurrences shall also be selectable. All settings shall be via the membrane command center.

5. Door-mounted LED display for digital indication of:

   a. Frequency output
   b. Voltage output
   c. Current output
   d. First fault indication
   e. Fan Speed (RPM)

6. Relay contacts for remote indication of drive fault and motor finning.

7. Three critical frequency avoidance bands, field programmable via the membrane command center. Each critical frequency avoidance band shall have a bandwidth adjustable via keypad entry of up to 10 Hz.

8. Three programmable preset speeds which shall force the AFC to a preset speed upon a user contract closure.

9. Isolated process follower to enable VFC to follow a 4-20 mA signal.

10. The AFC shall have the capability to ride through power dips up to 500 msec without a controller trip depending on load and operating condition.

11. Line reactor to minimize line surges, line notching, and voltage distortions. Line reactor shall be installed upstream of the drive.

H. Manual bypass-to-line with magnetic contactors to transfer motor from the variable frequency controller to full speed operation on utility supplied input power while the motor is at any speed. Two motor contactors, electrically interlocked shall be utilized, one contactor between the controller output and the motor and the other between the bypass power line and the motor, providing across-the-line starting.

I. Motor protection per National Electrical Code shall be provided in both the "controller" mode and the "bypass" mode by a motor overload relay. The 115 volt A-C relay control logic, allowing common start/stop commands in the "controller" mode and the "bypass" mode shall also be included within the enclosure.

J. The bypass shall include a door interlocked, main power input circuit breaker providing positive shutdown of all power to both the bypass circuitry and the VFC. The bypass circuit shall also include a second input disconnect to the VFC. This disconnect shall provide the ability to safely trouble shoot and test the controller, both energized and de-energized, while operating the bypass mode. Terminal connectors for over pressurization switches shall be provided, to protect the duct work in the bypass mode.

K. The VFC and all components shall be supplied within a single NEMA 1 enclosure, and shall be U.L. Listed as a single unit. Furnish all components necessary to provide a minimum lead length between motor and drive of 400 ft. The VFC shall not generate damaging transistor pulses greater than the limits set by NEMA MG-1 at 400 Ft lead length.

L. The VFC manufacturer shall maintain and staff nationwide service centers. These service engineers shall be employed by the manufacturer and provide start-up service including physical inspection of drive and connecting wiring and final adjustments to meet specified performance requirements.

M. The VFC shall carry a full parts and labor warranty for two years from date of Owner acceptance of the building.

N. The variable speed drive shall be Scheider S-Flex or as approved equal.

O. The variable speed drive manufacturer shall coordinate with the ATC contractor and provide all necessary devices whether optional or not to perform complete and automatic operation as described in the sequence of operation. All safeties, including freezestats, duct smoke detectors, and high static pressure sensors shall be enabled when variable speed drives are in manual or bypass.

P. BAS Interface: Factory-installed hardware and software to enable the BAS to monitor, control, and display VFC status and alarms. Allows VFC to be used with an external system within a multidrop LAN configuration; settings retained within VFC's nonvolatile memory.

1. Network Communications Ports: Ethernet and RS-422/485.
2. Embedded BAS Protocols for Network Communications: ASHRAE 135

BACnet; protocols accessible via the communications ports.

Q. Variable speed drives shall be carefully selected for the duty required. Variable speed drives shall be specifically designed for the specified equipment to be controlled. Pump drives shall be selected for pumps and fan drives shall be selected for fans.

2.6 TERMINAL AIR UNITS - NON FAN POWERED

A. VAV Boxes (Pressure Independent-Electronic Actuation), (conventional temperature - non fan powered)

1. Furnish and install variable air volume terminals of the sizes and capacities as indicated on the drawings. The boxes must be specifically designed and performance shall be ARI certified for medium temperature operation.

2. The entire terminal unit shall be specifically designed and built as a single unit for primary air (55°F). Units shall be provided with an insulated variable air volume damper that modulates the primary air in response to a wall mounted room thermostat. Units shall include an integral air sound attenuator.

3. Unit casing shall be a minimum of 20 gauge galvanized steel, fully lined with a minimum of 1 inch thick, 12-inch pound density, foil face, fiberglass insulation. The insulation shall be protected with a continuous vapor barrier and shall comply with UL standard 181 for erosion and NFPA 90A for fire resistivity. All exposed insulation edges shall be coated with NFPA approved sealant to prevent erosion. No cut edges of insulation shall be exposed to the moving air stream.

4. The terminal casing shall have a removable bottom access door which allows removal of fan, and servicing of unit without disturbing duct connections. Casing leakage shall not exceed 2 percent of the scheduled air flow at 3.0 inches difference in static pressure from inlet to outlet. All casing joints shall be sealed with an approved sealant if required to meet the maximum casing leakage.

5. The terminal casing shall have an insulated round inlet collar for the primary air connection and a rectangular discharge air connection. Casing shall be designed for hanging by all thread rods or sheet metal straps with spring vibration isolators from a concrete slab.

6. The control contractor shall be responsible for installation of space sensors, wiring to 120V power panel, and communication transmission bus. The controls contractor shall coordinate shipment of Terminal Control Unit, duct sensors and damper operators to the terminal box manufacturer for installation at the factory. The terminal box manufacturer shall supply and install necessary contactors, wiring, control transformers, relays and enclosures to assure terminal box functionality in accordance with this specification.

7. The Terminal Control Unit for the VAV terminal boxes, shall be furnished and shipped by the automatic temperature controls contractor to the terminal box manufacturer for installation at their factory. The cost of factory mounting, wiring, and any factory testing and programming of the Terminal Control Unit shall be included by the terminal box manufacturer. The control contractor shall

coordinate with the terminal box manufacturer and sheet metal contractor to ensure the delivery of factory installed controls and proper installation according to the project schedule.

8. The terminal box manufacturer shall install the air velocity sensor mounting bracket in the inlet collar of the terminal casing.

9. The normally-open unit shall be capable of operating in an early morning warmup cycle and a night set back cycle.

10. An air damper and actuator shall vary primary air in response to a thermostat signal. Damper leakage at shutoff shall not exceed 2 percent at 6 inches W.G. pressure. The damper shall be located inside the terminal.

11. Damper connection to the operating shaft shall be a positive mechanical connection. Provide self-lubricating bearings for the shaft. Nylon is not acceptable as bearing material.

12. The terminal shall incorporate single point electrical and control connections for the entire unit. All electrical components shall be UL listed and installed in accordance with the National Electric Code. All electrical components shall be mounted in a control box and the entire terminal shall be UL or ETL listed as an assembly.

13. Boxes shall be equipped with hot water heat coils as scheduled on the drawings.

    a. Hot water reheat coils shall be enclosed in a minimum 20 gauge galvanized steel casing with slip and drive construction for attachment to metal ductwork. Coils shall be factory installed on the terminal discharge. Fins shall be rippled and corrugated heavy gauge aluminum, mechanically bonded to tubes. Tubes shall be copper with minimum wall thickness of .016-inch with male solder header connections. Coils shall be leak tested to 300 psi with minimum burst pressure of 2000 psi at ambient temperature. Number of coil rows and circuits shall be selected to provide performance as required per the plans. Coil performance data shall be based on tests run in accordance with ARI Standard 410.

14. At an inlet velocity of 2000 fpm, the differential static pressure required to operate any terminal size shall not exceed .18-inch w.g. for the basic terminal.

15. Boxes shall be equipped with a control transformer. The box manufacturer and control manufacturer shall coordinate all requirements to assure a complete and operational system.

16. Testing Requirements: Test and rate air terminals according to ARI 880, *Industry Standard for Air Terminals.*

17. Identification: Label each air terminal with plan number, nominal airflow, maximum and minimum factory-set airflows, coil type, and ARI certification seal.

18. Acoustically test all VAV boxes per ARI Standard 880-83. Submit sound power data discharge, inlet and casing radiated.

19. Variable volume terminals shall be series DESV as manufactured by Titus, Environmental Technologies, Inc., Krueger, Price, or approved as equal.

2.7 FUME HOOD EXHAUST TERMINAL AIR UNITS

A. Venturi Air Valve (VAV) Boxes (Pressure Independent-Electronic Actuation), (conventional temperature - non fan powered)

1. The exhaust air control device shall be a venture valve, which is pressure independent over its specified differential pressure operating range. The integral pressure independent assembly shall respond and maintain specific airflow within one second of a change in duct static pressure irrespective of the magnitude of pressure and/or flow change.

2. Furnish and install venture air valve terminals of the sizes and capacities as indicated on the drawings. The boxes must be specifically designed for laboratory exhaust applications and performance shall be AHRI certified for medium temperature operation.

3. Unit casing shall be a minimum of 14 gauge spun aluminum construction. The airflow control device for corrosive airstreams, such as fume hoods and biosafety cabinets, shall have a baked-on, corrosion-resistant phenolic coating. The device's shaft shall be made of 316 stainless steel with a Teflon coating. The shaft support brackets shall be made of 316 stainless teel. The pivot arm and internal mounting link shall be made of 316 or 303 stainless steel. The pressure independent springs shall be a spring-grade stainless steel. The internal nuts, bolts, and rivets shall be stainless steel. All shaft bearing surfaces shall be made of a Teflon or PPS (polyphenylene sulfide) composite.

4. Casing leakage shall not exceed 1-cfm at 3.0 inches difference in static pressure from inlet to outlet. All casing joints shall be sealed with an approved sealant if required to meet the maximum casing leakage.

5. The terminal casing shall have round inlet/outlet collars for the exhaust air connections. Casing shall be designed for hanging by all thread rods or sheet metal straps with spring vibration isolators from a concrete slab.

6. For electrically actuated VAV operation, a UL 916 listed electronic actuator shall be factory mounted to the valve. Loss of main power shall cause the valve to position itself in an appropriate failsafe state. Options for these failsafe states include: normally open-maximum position, nonrmally cosed-minimum position and last position. This position shall be maintained constantly without external influence, regardless of external conditions on the valve (within product specifications)

7. The control contractor shall be responsible for installation of air flow/pressure sensors, pneumatic signal tubing, wiring to 24V control transformers and to 120V power panel, and communication transmission bus. The controls

contractor shall coordinate shipment of Terminal Control Unit, duct sensors and venture actuators as needed to the terminal box manufacturer for installation at the factory. The terminal box manufacturer shall supply and install necessary contactors, wiring, control transformers, relays and enclosures to assure terminal box functionality in accordance with this specification.

8. The Terminal Control Unit for the VAV terminal boxes shall be furnished and shipped by the automatic temperature controls contractor to the terminal box manufacturer for installation at their factory. The cost of factory mounting, wiring, and any factory testing and programming of the Terminal Control Unit shall be included by the terminal box manufacturer. The control contractor shall coordinate with the terminal box manufacturer and sheet metal contractor to ensure the delivery of factory installed controls and proper installation according to the project schedule.

9. The terminal box manufacturer shall install the air velocity sensor mounting bracket in the inlet collar of the terminal casing.

10. The terminal shall incorporate single point electrical and control connections for the entire unit. All electrical components shall be UL listed and installed in accordance with the National Electric Code. All electrical components shall be mounted in a control box and the entire terminal shall be UL or ETL listed as an assembly.

11. At an inlet velocity of 2000 fpm, the differential static pressure required to operate any terminal size shall not exceed .18-inch w.g. for the basic terminal.

12. Testing Requirements: Test and rate air terminals according to ARI 880, *Industry Standard for Air Terminals.* Each airflow control device shall be factory calibrated to the job specific air flows as detailed on the plans and specifications using NIST traceable air stations and instrumentation having a combined accuracy of no more than ± 1% of signal over the entire range of measurement.

13. Identification: Label each air terminal with plan number, nominal airflow, maximum and minimum factory-set airflows, and AHRI certification seal.

14. Acoustically test all VAV boxes per AHRI Standard 880-83. Submit sound power data discharge, inlet and casing radiated.

15. Variable volume terminals shall be series AV as manufactured by Siemens Industry Inc., Phoenix Controls Corp., or approved as equal.

PART 3 EXECUTION

3.1 EXAMINATION

A. Verify all dimensions by field measurements. Verify that all equipment may be installed in accordance with pertinent codes and regulations, the original design, and the referenced standards.

B. Verify structure, mounting supports and membrane installations are completed to the

proper point to allow installation of roof mounted equipment, where applicable.

C. Examine rough-in requirements for all piping systems to verify actual locations of piping connections prior to installation.

D. Verify that electrical work installation is in accordance with manufacture's submittal and installation requirements of Division 26 sections. Do not proceed with equipment start-up until electrical work is acceptable to equipment installer. Coordinate sizes of all thermal overloads with Division 26.

E. Do not proceed until unsatisfactory conditions have been corrected.

F. Provide wiring diagrams of all equipment as specified in Division 23 Section, *Common Work Results for HVAC.*

3.2 GENERAL INSTALLATION REQUIREMENTS

A. Install all equipment in accordance with manufacturer's installation instructions, in accordance with state and local code requirements, and in accordance with the contract drawings. Install all equipment plumb and level, to tolerances as required by the manufacturer of each item of equipment. Maintain manufacturer recommended clearances around and over all equipment.

B. Coordinate vibration isolation requirements with all equipment in accordance with Division 23 Section, *Vibration Controls for HVAC, Plumbing and Fire Protection Equipment*.

C. Coordinate all electrical requirements with Division 26.

D. Verify piping arrangements of all equipment with the contract drawings. Piping details shall be strictly adhered to concerning valves, fittings, components, etc. At coils, where a rebuildable and repairable autoflow valve is installed in the line without the need for draining or shutting of the water, the same may be utilized as the isolation valve and additional shut-off valve is not required.

E. Connect all equipment, devices and components to wiring systems and to ground as indicated and instructed by manufacturer. Tighten connectors and terminals, including screws and bolts, according to equipment manufacturer's published torque-tightening values for equipment connectors. Where manufacturer's torquing requirements are not indicated, tighten connectors and terminals according to tightening requirements specified in UL 486A.

F. Testing: After installing HVAC equipment, devices and components and after electrical circuitry has been energized, demonstrate product capability and compliance with requirements.

G. Remove and replace malfunctioning units with new units and retest.

H. All mechanical penetrations or terminations in exterior walls shall be flashed and caulked watertight.

I. Arrange for equipment such as fume hood exhaust fans to be shipped to project in modules where space constraints require the same. Field erect components as required.

3.3 FIELD QUALITY CONTROL

A. Where indicated provide the services of a factory authorized service representative to examine the field assembly of components, installation, piping, electrical connections, controls, and clearances. Submit factory start-up check list to Engineer for information purposes. Testing and balancing work shall not commence until start-up reports have been completed, reviewed by Engineer, and forwarded to Testing and Balancing Agency.

B. Where factory start-up of equipment is not specified, provide field start-up by qualified technician to examine the field assembly of components, installation, piping, electrical connections, controls and clearances. Record equipment manufacturers standard start-up information and submit to Engineer for review. Testing and balancing work shall not commence until start-up reports have been completed, reviewed by Engineer, and forwarded to Testing and Balancing Agency.

C. Charge all refrigerant systems with refrigerant and oil and test for leaks. Repair leaks and replace lost refrigerant and oil.

D. Fill all hydronic systems with water and/or antifreeze when required after flushing and test for leaks. Repair leaks and replace lost water and/or antifreeze. Coordinate with water treatment contractor.

E. Verify proper motor sizes, voltages, thermal overloads, nameplate data, etc. All equipment voltages and current shall be recorded to insure that motors are operating below their service factors. Test and Balance Engineer shall record electrical data before continuous or permanent operation.

3.4 DEMONSTRATION

A. Provide the services of a factory authorized service representative to provide start-up and to demonstrate and train the Owner's maintenance personnel.

B. Place equipment into operation and adjust controls and safeties. Replace damaged or malfunctioning components and controls.

C. Training:

1. Train the Owner's maintenance personnel on start-up and shut-down procedures, trouble shooting procedures, lubrication, servicing procedures and preventative maintenance schedules/procedures. Review with the Owner's personnel, the contents of the operation and maintenance data specified in Division 23 Section, *Common Work Results for HVAC.*

2. Submit operation and maintenance data as soon as possible prior to project close-out. Operations and maintenance data shall be submitted to the Owner for review and comment prior to submission to the Engineer.

3. Schedule training with the Owner through the Architect and/or Engineer with at

least seven (7) days prior notice.

D. Contractor shall demonstrate removal and replacement of filters at all pieces of equipment with filters in the prescence of the Owners representative.

3.5 CLEANING

A. After completing installation, inspect exposed finish. Remove burrs, dirt, and construction debris, and repair damaged finishes including chips, scratches, and abrasions.

B. Clean fan and equipment interiors to remove foreign material and construction dirt and dust. Vacuum clean fan wheels, cabinets, and coils' entering air face.

3.6 EXISTING AIR HANDLING UNIT INSTALLATION REQUIREMENTS

A. Clean coils and all damper linkages.

B. Install freeze protection pumps where indicated.

C. Install all new filters.

D. Comb out fins on AHU coils where deformed or bent. Replace or repair broken fins.

E. Make connections to coils with unions and flanges.

F. Insulate all headers outside air flow as specified for piping.

G. Arrange installation of units to provide access space around air handling units for service and maintenance.

H. Adjust damper linkages for proper damper operation.

I. Install air tight seals at all air handling penetration points, including pipe penetrations at the coils, unused maintenance - only drain openings, and any penetrations for electrical wiring.

J. Refer to Contract Drawings for additional requirements.

K. Furnish and install new belts, sheaves, etc. as required for balancing.

3.7 FAN INSTALLATION REQUIREMENTS.

A. Install fans with resilient mounting and flexible electrical leads.

B. Install flexible connections and vibration isolators as specified in Division 23 Section, *Common Work Results for HVAC* and Division 23 Section *Vibration Controls for HVAC, Plumbing and Fire Protection Equipment*. Ensure metal band of connectors are parallel with minimum one inch flex between ductwork and fan while running.

C. Provide safety screens/guards on all fans and permanently mount after final testing and

balancing.

D. For fume hood exhaust fans pipe scroll drains, and curb drains with trap, full size to roof. Pipe material shall be 316 stainless steel. All piping shall be heat traced, insulated, and jacketed.

E. Do not operate fans for any purpose until ductwork is clean, filters in place, bearings lubricated, and fans have been test run under operation.

F. Provide sheave required for final air balance.

G. Install fans according to manufacturer's written instructions.

H. Adjust damper linkages for proper damper operation.

I. Adjust belt tension.

J. Lubricate bearings.

K. Replace fan and motor pulleys and belts as required to achieve design conditions.

3.8 HVAC PUMP INSTALLATION REQUIREMENTS

A. Provide access space around pumps for service. Provide no less than minimum as recommended by manufacturer.

B. Lubricate pumps before start-up.

C. Install pumps according to manufacturer's written instructions.

1. Install pumps according to HI 1.1-1.5, *Centrifugal Pumps for Nomenclature, Definitions, Application and Operation.*

D. Install pumps to provide access for periodic maintenance, including removing motors, impellers, couplings, and accessories.

E. Suspend in-line pumps using continuous-thread hanger rod and vibration-isolation hangers.

3.9 VAV EQUIPMENT INSTALLATION REQUIREMENTS

A. Provide ceiling access doors or locate VAV units above easily removable ceiling components. Support VAV units such that all access doors and panels are readily accessable.

B. Support units individually from structure. Do not support from adjacent ductwork.

C. Verify that electric power is available and of the correct characteristics.

D. Adjust minimum and maximum set points of VAV units as indicated on contract drawings.

E. Provide proper service, maintenance access around all variable frequency drives.

F. Install variable frequency drives in accordance with NEC.

G. Coordinate electrical characteristics of variable frequency drives with motor served.

H. Externally insulate all air flow monitoring stations to prevent surface condensation.

I. Install VAV boxes level and plumb, according to manufacturer's written instructions, rough-in drawings, original design, and referenced standards; and maintain sufficient clearance for normal service and maintenance.

J. Connect ductwork to air terminals according to Division 23 Section, *HVAC Air Distribution* ductwork sections.

K. Install piping adjacent to air terminals to allow service and maintenance.

L. Test and adjust controls and safeties. Replace damaged and malfunctioning controls and equipment.

END OF SECTION

DIVISION 23 SECTION 230701
HVAC INSULATION

TABLE OF CONTENTS

PART 1 - GENERAL

1.1 REFERENCE
1.2 DESCRIPTION
1.3 SCOPE
1.4 STANDARDS
1.5 SYSTEM PERFORMANCE
1.6 QUALITY ASSURANCE
1.7 DELIVERY AND STORAGE OF MATERIALS
1.8 ALTERNATES

PART 2 - PRODUCTS

2.1 GENERAL
2.2 PIPE INSULATION MATERIALS
2.3 PIPING INSULATION THICKNESSES SCHEDULE
2.4 EQUIPMENT INSULATION MATERIALS AND THICKNESSES
2.5 DUCTWORK INSULATION MATERIALS AND THICKNESSES
2.6 ACCESSORY MATERIAL
2.7 FIELD-APPLIED JACKETS
2.8 HANGER BLOCKS

PART 3 - EXECUTION

3.1 WORKMANSHIP
3.2 SITE INSPECTION
3.3 PREPARATION
3.4 INSTALLATION
3.5 FIELD QUALITY ASSURANCE
3.6 PROTECTION
3.7 SAFETY PRECAUTIONS
3.8 INSULATION COVERING

SECTION 230701 - HVAC INSULATION

PART 1. GENERAL

1.1. REFERENCE

A. The Conditions of the Contract and other General Requirements apply to the work specified in this Section. All work under this Section shall be subject to the requirements of Division 23 Section, *Common Work Results for HVAC*.

B. Drawings and general provisions of the Contract, including General and Supplementary Conditions and Division 01 Specification Sections, apply to this Section

1.2. DESCRIPTION

A. All piping, ductwork, and equipment installed under this Contract shall be covered as specified.

1.3. SCOPE

A. The work covered by this specification consists of furnishing all labor, equipment, materials and accessories, and performing all operations required, for the correct fabrication and installation of thermal insulation applied to all piping, equipment, and duct systems, in accordance with applicable project specifications and drawings, subject to the terms and conditions of the contract.

1.4. STANDARDS

A. Thermal insulation materials shall meet the property requirements of one or more of the following specifications as applicable to the specific product or use:

1. American Society for Testing of Materials Specifications:

a). ASTM C 547, "Standard Specification for Mineral Fiber Preformed Pipe Insulation".

b). ASTM C 533, "Standard Specification for Calcium Silicate Pipe & Block Insulation".

c). ASTM C 55, "Standard Specification for Mineral Fiber Blanket and Felt Insulation".

d). ASTM E 96, “Standard Test Methods for Water Vapor Transmission of Material”.

e). ASTM C 585, "Recommended Practice for Inner and Outer Diameters of Rigid Pipe Insulation for Nominal Sizes of Pipe and Tubing (NPS System)".

f). ASTM C 612, "Standard Specification for Mineral Fiber Block and Board Thermal Insulation".

g). ASTM C 1136, "Standard Specification for Barrier Material, Vapor, "Type 1 or 2 (Jacket only).

2. ASHRAE 90.1 "Energy efficient design of new buildings except low-rise residential buildings", latest edition.

3. International Energy Conservation Code, latest edition.

B. Insulation materials, including all weather and vapor barrier materials, closures, hangers, supports, fitting covers, and other accessories, shall be furnished and installed in strict accordance with project drawings, plans, and specifications.

1.5. SYSTEM PERFORMANCE

A. Insulation materials furnished and installed hereunder should meet the minimum economic insulation thickness requirements of the North American Insulation Manufacturers' Association (NAIMA) (formerly known as TIMA), to ensure cost-effective energy conservation performance. Alternatively, materials should meet the minimum thickness requirements of National Voluntary Consensus Standard 90.1, (latest edition) and "Energy Efficient Design of New Buildings," of the American Society of Heating, Refrigeration, and Air-Conditioning Engineers (ASHRAE), latest edition. However, if other factors such as condensation control or personnel protection are to be considered, the selection of the thickness of insulation should satisfy the controlling factor. As minimum, all insulation thicknesses shall be as hereinafter specified.

B. Insulation materials furnished and installed hereunder shall meet the fire hazard requirements of any one of the following specifications:

1. American Society for Testing of Materials ASTM E 84

2. Underwriters' Laboratories, Inc. UL 723

3. National Fire Protection Association NFPA 255

4. ASTM E 96, “Standard Test Methods for Water Vapor Transmission of Materials”.

C. Calcium silicate products shall include a visual identification system to permit positive field determination of their asbestos-free characteristics.

1.6. QUALITY ASSURANCE

A. Insulation materials and accessories furnished and installed hereunder shall, where required, be accompanied by manufacturers' current submittal or data sheets showing compliance with applicable specifications listed in Section 1.4 above.

B. Insulation materials and accessories shall be installed in a workmanlike manner by skilled and experienced workers who are regularly engaged in commercial insulation work.

1.7. DELIVERY AND STORAGE OF MATERIALS

A. All of the insulation materials and accessories covered by this specification shall be delivered to the job site and stored in a safe, dry place with appropriate labels and/or other product identification.

B. The Contractor shall use whatever means are necessary to protect the insulation materials and accessories before, during, and after installation. No insulation material shall be installed that has become damaged in any way. The Contractor shall also use all means necessary to protect work and materials installed by other trades.

C. If any insulation material has become wet because of transit or job site exposure to moisture or water, the Contractor shall not install such material, and shall remove it from the job site. An exception may be allowed in cases where the Contractor is able to demonstrate that wet insulation when fully dried out (either before installation, or afterward following exposure to system operating temperatures) will provide installed performance that is equivalent in all respects to new, completely dry insulation. In such cases, consult the insulation manufacturer in writing for technical assistance.

D. Maintain ambient temperatures and conditions required by manufacturers of adhesives, mastics, and insulation cements. Protect all insulation from water, construction traffic, dirt, chemical and mechanical damage.

1.8. ALTERNATES

A. Refer to Division 01 Section, “Alternates” for description of work under this section affected by alternates.

PART 2. PRODUCTS

2.1. GENERAL

A. All materials to be insulated shall be thoroughly cleaned, after completion of successful tests, and shall be covered as specified below. Fiberglass insulation shall be Owens-Corning, Manville, Armstrong, or P.P.G, or as approved equal.

2.2. PIPE INSULATION MATERIALS

A. Unless otherwise noted, insulation shall be one piece or half sectional molded fibrous glass with "K" rating of .23 at 75 degrees Fahrenheit mean temperature, for service temperatures between -60 degrees Fahrenheit and +450 degrees Fahrenheit with all service poly-encapsulated jacket. Pipe insulation shall be fiberglass ASJMax SSL II with double closure system as manufactured by Owens Corning, Johns Manville, Knauf or approved equal.

B. Exterior pipe insulation , fume hood exhaust fan drain/trap insulation shall be Armacell, or approved equal, foam insulation with exterior field applied aluminum jacketing. Interior refrigerant piping shall be Armacell or approved equal foam insulation. Where interior refrigerant piping is exposed also install field applied PVC jacketing.

C. Unless otherwise noted, pipe insulation jacket shall be factory-applied vinyl coated, embossed and reinforced vapor barrier laminate, with a perm rating of not more than 0.02 perms. All hot and cold, concealed and exposed butt strips shall be of the same material as the jacket. Jacket and butt strips shall be sealed with field-applied Foster 85-20/85-60 or Childers CP-82 (5 gal cans only) adhesive. Jacket and butt strips shall be off-white color and shall be equivalent to Owens-Corning Fiberglass 25-ASJ.

D. Indoor chilled water pipe insulation shall be ASJ Max with SSL-II closure system pipe insulation as manufactured by Owens Corning or approved equal. Pipe insulation shall be composed of heavy density fiberglass insulation with an organic binder. The insulation shall include a white, factory jacketed, resilient, tough, soil resistant polymer facing that matches standard PVC fitting covers. Furnish all accessories and matching butt joints sealing tape for system closure. Insulation shall be suitable for operating temperatures between 32 degrees Fahrenheit and 220 degrees Fahrenheit. Flame spread rating of 25 or less, and smoke development rating of 50 or less to comply with building codes for installation in return air plenums. The maximum thermal conductivity (K-value) at a mean temperature of 50 shall be .22 BTU-in/hr-Ft^2-degrees Fahrenheit.

E. For fittings on all piping, valves and flanges, apply fiberglass molded or segmented insulation equal in thickness to the adjoining insulation and securely fasten in place using wire. Cold piping: Apply a tack coat of vapor barrier coating and reinforcing mesh. After ½ hour, apply second coat of same vapor barrier coating, UL labeled, Type C, for cold water piping, Hot piping Type H for hot water piping: Apply tack of breather mastic. Wrap fitting with fiberglass reinforcing cloth overlapping adjoining sections of pipe insulation by 2-inches. Apply a second coat of breather mastic over the reinforcing cloth, working it to a smooth finish.

1. Vapor Barrier Coating: Foster 30-65; Childers CP-34 or Vimasco 749. Permeanie shall be 0.03 perms or less at 45 mils dry as test by ASTM E96.
2. Breather mastic: Foster 46-50; Childers CP-10/11 or Vimasco WC-5
3. Reinforcing Mesh: Foster Mast a Fab; Childers Chil Glas #10 or Vimasco Elastafab

F. All pipe insulation, jackets, or facings, and adhesives used to adhere jacket or facing to the insulation, including fittings and butt strips, shall have non-combustible fire and smoke hazard system rating and label as tested by ASTM E-84, NFPA 225, and UL 73, not exceeding Flame Spread 25, Fuel Contributed 50, Smoke Developed 50. Accessories such as adhesives, mastic cements, tapes and cloth for fittings shall have the same ratings as listed above. All products or their shipping cartons shall bear the Underwriter's label indicating that flame and smoke ratings do not exceed the above criteria.

G. For piping having a vapor barrier insulation and for all insulated piping requiring supports, hangers and supports shall be installed outside the insulation. Wherever hangers and supports are installed outside the insulation, pipe insulation protecting shields shall be provided. Where insulation is a load bearing material, of sufficient strength to support the weight of the piping, pipe shields one-third the circumference of the insulation and of a length not less than three times the diameter of the insulation (maximum length 24-inches) shall be provided. Insulation of 7-1/4 pound or greater density will be considered as load bearing for pipe sizes up to and including 2-inches. Where insulation is not of sufficient strength to support the weight of the piping, a half section of high density fiberglass or foam

inserts, shall be provided. Vapor barrier and finish shall be applied as required to match adjoining insulation. In addition, shields shall be furnished as specified above.

H. All disturbed piping insulation in existing areas shall be re-insulated with insulation type, density, and thickness as specified for new piping. Insulation damaged due to new work and demolition only shall be replaced unless otherwise noted.

I. On cold systems such as chilled water piping, vapor barrier performance is extremely important. All penetrations and seams of the ASJ and exposed ends of insulation must be sealed with vapor barrier coating. The ASJ must be protected with either a coating or a suitable vapor retarding outer jacket. Vapor seals at butt joints shall be applied at every fourth pipe section joint and at each fitting to provide isolation of water incursion. Vapor Barrier Coating: Foster 30-65; Childers CP-34 or Vimasco 749. Permeance shall be 0.03 perms or less at 45 mils dry as test by ASTM E96.

J. Fittings and valves shall be insulated with pre-formed fiberglass fittings, fabricated sections of fiberglass pipe insulation, Fiberglass pipe and tank insulation, Fiberglass blanket insulation, or insulating cement. Thickness shall be equal to adjacent pipe insulation. Finish shall be with pre-formed PVC fitting covers or as otherwise specified on contract drawings. Where applicable, Victaulic PVC fitting valve and coupling covers shall be utilized. Victaulic PVC covers shall be installed with matching pipe insulation jacketing material, vinyl tape solvent weld adhesive and appropriate fasteners.

1. Flanges, couplings and valve bonnets shall be covered with an oversized pipe insulation section sized to provide the same insulation thickness as on the main pipe section. An oversized insulation section shall be used to form a collar between the two insulation sections with low density blanket insulation being used to fill gaps. Jacketing shall match that used on straight pipe sections. Rough cut ends shall be coated with a suitable weather or vapor-resistant mastic as dictated by the system location and service. Finish valve installation with a Tyvac jacket with ends that secure to adjacent piping.

2. On hot systems where fittings are to be left exposed, insulation ends should be beveled away from bolts for easy access.

3. On cold systems, particular care must be given to vapor sealing the fitting cover or finish to the pipe insulation vapor barrier. All valve stems must be sealed with caulking which allows free movement of the stem but provides a seal against moisture incursion. All gauge and thermometer penetrations and extensions shall be correctly sealed and insulated to prevent surface condensation. Install oversized hangers to prevent penetrations of pipe insulation vapor barrier.

K. All piping shall be supported in such a manner that neither the insulation or the vapor/weather barrier is compromised by the hanger or the effects of the hanger. In all cases, hanger spacing must be such that the circumferential joint may be made outside the hanger. On cold systems, vapor barrier must be continuous, including material covered by the hanger saddle.

1. Piping systems 3-inches (7.5cm) in diameter or less, insulated with Fiberglass insulation, may be supported by placing saddles of the proper length and spacing, as

designated in Owens-Corning Pub. 1-IN-12534, under the insulation. Hangers saddles shall be minimum 16 gauge with a saddle arc of 120 degrees minimum.

2. For hot or cold piping systems larger than 3-inches (7.5 cm) in diameter, operating at temperatures less than +200 degrees F (93 degrees C) and insulated with fiber glass, high density inserts such as foam or wood blocks with sufficient compressive strength shall be used to support the weight of the piping system. At temperatures exceeding ±200 degrees F (93 degrees C), Owens-Corning Pink Calcium Silicate, IIG, or approved equal pipe insulation shall be used for high density inserts.

3. Owens-Corning Pink Calcium Silicate pipe insulation may be used to support the entire weight of the piping system provided the hanger saddle is designed so the maximum compressive load does not exceed 100 psi (7kg/cm).

4. Where pipe shoes and roller supports are required, insulation shall be inserted in the pipe shoe to minimize pipe heat loss. Where possible, the pipe shoe shall be sized to be flush with the outer pipe insulation diameter.

5. Thermal expansion and contraction of the piping and insulation system shall generally be taken care of by utilizing double layers of insulation and staggering both longitudinal and circumferential joints. Where long runs are encountered, expansion joints may be required where single layers of insulation are being used and should be so noted on the contract drawings.

6. On vertical runs, insulation support rings shall be used.

2.3. PIPING INSULATION THICKNESSES SCHEDULE

A. All piping shall be insulated with pipe insulation of the thicknesses indicted below:

PIPING INSULATION THICKNESS SCHEDULE SERVICES	**THICKNESS**
Chilled Water Piping 2 ½-inches & Larger	2-inch thickness
Chilled Water Piping 2-inches & Smaller	2-inch thickness
Heating Hot Water Piping 2-inches & Larger	2 –inch thickness
Heating Hot Water Piping 1-½ -inches & Smaller	1 ½ -inch thickness

2.4. EQUIPMENT INSULATION MATERIALS AND THICKNESSES

A. The following equipment shall be insulated with Fiberglass Rigid Board Insulation or Foam Plastic Insulation:

1. Chilled Water Pump and Hot Water Pump Bodies.

2. Freeze Protection Pump Bodies.

3. All Pump Volutes and Strainers.

B. Insulation for cold surfaces shall be 1-1/2-inch thickness, 6 lb. density, 705 FRK with a "K" rating of .23 at 75 degrees F mean temperature. Insulation for hot surfaces except as otherwise noted shall be 1-1/2-inch thickness, 6 lb. density, 705 with a "K" rating of .23 at 75 degrees F mean temperature. Insulation shall be applied with staggered joints firmly butted and joined. The insulation shall be held in place by steel bands. Bands shall be 1-inch by 25 gauge galvanized steel spaced on not over 12-inch centers. All joints and voids shall be filled with Owens-Corning #110 cement, well troweled into openings. For 705 FRK insulation, all joints and voids shall be FRK taped and vapor sealed. There shall be applied over the insulation surface 1-inch galvanized wire netting laced together at all edges and wired to the steel bands with 16 gauge soft annealed wire. Over this shall be applied 2-inch thick layer of Owens-Corning #110 cement applied in two layers. Install metal corner beads at all corners and edges in order to provide a permanent installation. Onto the dry cement surface apply a brush coat of Foster Sealfas 30-36 or Childers CP-50AMV1 lagging adhesive at the rate of 60-70 square feet per gallon. Embed into wet coating a layer of 8 ounce canvas or fiberglass lattice mesh smoothed out to avoid wrinkles and lap all seams a minimum of 2-inches. Apply a second brush coat of Sealfas 30-36 or Childers CP-50AMV1 lagging adhesive to the entire surface at the rate of 60-70 square feet per gallon. Cleanouts, nameplates, and manholes shall not be insulated, and the insulation on surrounding surfaces shall be neatly beveled off at such openings.

C. Insulation Installation on Pumps:

1. Fabricate metal boxes lined with insulation. Fit boxes around pumps and coincide box joints with splits in pump casings. Fabricate joints with outward bolted flanges. Bolt flanges on 6-inch (150-mm) centers, starting at corners. Install 3/8-inch- (10-mm-) diameter fasteners with wing nuts. Alternatively, secure the box sections together using a latching mechanism.
2. Fabricate boxes from aluminum at least 0.040 inch (1.0 mm) thick.
3. For below ambient services, install a vapor barrier at seams, joints, and penetrations. Seal between flanges with replaceable gasket material to form a vapor barrier.

D. Boards shall be scored to allow them to conform to curved or irregular surfaces.

E. Mechanical fasteners shall be utilized to hold insulation to surface with bands as required to hold the curvature of the material.

F. Support rings shall be provided to support the top head insulation where required.

G. Outdoor installations require a weather barrier for protection of the insulation jacketing.

H. Insulation types materials shall be suitable for temperatures encountered by each item of equipment.

2.5. DUCTWORK INSULATION MATERIALS AND THICKNESSES

A. Insulate all supply, return, and outside air intake ductwork with fiberglass exterior duct insulation with factory-applied foil facing. All exposed fiberglass duct insulation shall be 2-

inch rigid or non-flexible board type 3.0 pcf minimum density, 0.23 max. "K" factor at 75 degrees F mean temperature, with white vinyl A.S.J. max, polymer coating vapor barrier facing. All concealed fiberglass duct insulation shall be 2-inch flexible blanket type, 1.0 pcf minimum density. All concealed insulation shall be 0.27 max. "K" factor at 75 degrees F mean temperature with reinforced foil-scrim Kraft vapor barrier facing. Unless otherwise noted, the minimum installed R-value shall be 6.0 HR x ft^2 x ºF/btu.

B. For concealed supply air ductwork from air handling units to variable air volume boxes, insulation shall be 2 -inch flexible blanket, 12 pcf minimum density, .25 max "k" factor at 75 degrees F mean temperature.

C. Refer to Division 23 Section, *HVAC Air Distribution System* and contract drawings for location of all sound-lined ductwork. Sound-lined ductwork from the discharge or supply side of all VAV boxes and fume hood terminal boxes shall require external insulation in addition to internal lining specified hereinafter. All other ducts indicated to be provided with interior lining shall not require additional exterior insulation.

D. Where a vapor barrier is required, all joints, seams, tears, punctures, and other penetrations shall be closed with 3-inch (7.5cm) pressure-sensitive tape matching the facing or with vapor barrier coating reinforced with 3-inch (7.5cm) glass scrim tape.

E. Contractor-applied internal linings shall be as specified and installed as hereinafter specified.

F. For exposed Fiberglass duct insulation, tightly butt all edges and seams. Secure insulation with flush mechanical fasteners spaced not less than one per square foot. Insulation may be secured with 100 percent coverage of adhesive with mechanical fasteners on the underside of the duct only, in addition to adhesive. Adhesive shall be water based Foster 85-60 or Childers CP-127. Cover all seams, joints and fasteners with not less than 3-inch wide tape matching the insulation facing. Pre-finished white fastener caps may be left exposed if the spacing and pattern is uniform in appearance. Staples will not be permitted.

G. All VAV box hot water coils shall be insulated with fiberglass exterior duct insulation with factory applied foil facing. Insulation shall be 1½ -inches flexible blanket type, 1.0 pcf minimum density, 30 max "k" factor, with reinforced foil-scrim Kraft vapor barrier facing.

H. All disturbed ductwork insulation in existing areas shall be re-insulated with insulation type and thickness as specified for new ductwork. Duct insulation damaged due to installation of new work and demolition only shall be replaced.

I. All supply air diffusers and supply air registers shall be fully insulated on the rear exposed surface to prevent condensation. Insulation shall be 1 ½" inch flexible blanket type 1 ½ pcf minimum density with reinforced foil-scrim-Kraft vapor barrier facing, .25 max "k" factor.

J. Existing ductwork that is indicated to be re-used shall be cleared, degreased, sealed, and insulated as specified for new ductwork.

2.6. ACCESSORY MATERIALS

A. Accessory materials installed as part of insulation work under this section shall include, but not be limited to:

1. Closure Materials - Butt strips, bands, wires, staples, mastics, adhesives; pressure-sensitive tapes.

2. Field-applied jacketing materials - sheet metal, plastic, canvas, fiber glass cloth, insulating cement; PVC fitting covers, PVC jacketing.

3. Support Materials - Hanger straps, hanger rods, saddles.

4. Fasteners, weld pins/studs, speed clips, insulation washers.

5. Metal mesh or expanded metal lagging.

B. All accessory materials shall be installed in accordance with project drawings and specifications, manufacturer's instructions, and/or in conformance with the current edition of the Midwest Insulation Contractors Association (MICA) "Commercial & Industrial Insulation Standards."

2.7. FIELD-APPLIED JACKET

A. Field-applied jackets shall comply with ASTM C 921, Type I, unless otherwise indicated.

B. PVC Jacket: High-impact-resistant, UV-resistant PVC complying with ASTM D 1784, Class 16354-C; thickness as scheduled; roll stock ready for shop or field cutting and forming. Thickness is indicated in field-applied jacket schedules.

1. Products: Subject to compliance with requirements, available products that may be incorporated into the Work include, but are not limited to, the following:
   a). Johns Manville; Zeston.
   b). P.I.C. Plastics, Inc.; FG Series.
   c). Proto PVC Corporation; LoSmoke.
   d). Speedline Corporation; SmokeSafe.

2. Adhesive: As recommended by jacket material manufacturer.

3. Color: High gloss white.

4. Factory-fabricated fitting covers to match jacket if available; otherwise, field fabricate.
   a). Shapes: 45- and 90-degree, short- and long-radius elbows, tees, valves, flanges, unions, reducers, end caps, soil-pipe hubs, traps, mechanical joints, and P-trap and supply covers for lavatories.

5. Factory-fabricated tank heads and tank side panels.

2.8. HANGER BLOCKS

A. For all pipes larger than 3 inches in diameter the hanger blocks shall be high compressive strength foam or wood blocks. Wood blocks shall be precision cut thickness to match

specified insulation and shall include flared edge hanger saddle as manufactured by Buckaroo.

B. The wood blocks shall be suitable for temperatures from -120 degrees Fahrenheit to 200 degrees Fahrenheit. Do not utilize the wood blocks for piping systems operating outside of the indicated temperature range.

C. Wood blocks are not acceptable for use at refrigerant pipe hangers.

PART 3. EXECUTION

3.1. WORKMANSHIP

A. The Contractor shall take special care to prevent soiling equipment below or adjacent to areas being insulated. He shall be completely responsible for removing insulation cement splashes and smears and all surfaces that he mars or otherwise soils or defaces, and he will be totally responsible for restoring these damaged surfaces to their like-new condition when delivered to the site.

3.2. SITE INSPECTION

A. Before starting work under this section, carefully inspect the site and installed work of other trades and verify that such work is complete to the point where installation of materials and accessories under this section can begin.

B. Verify that all materials and accessories can be installed in accordance with project drawings and specifications and material manufacturers' recommendations.

C. Verify, by inspecting product labeling, submittal data, and/or certifications which may accompany the shipments, that all materials and accessories to be installed on the project comply with applicable specifications and standards and meet specified thermal and physical properties.

3.3. PREPARATION

A. Ensure that all pipe and equipment surfaces over which insulation is to be installed are clean and dry.

B. Ensure that insulation is clean, dry, and in good mechanical condition with all factory-applied vapor or weather barriers intact and undamaged. Wet, dirty, or damaged insulation shall not be acceptable for installation.

C. Ensure that pressure testing of piping or duct systems has been completed prior to installing insulation.

3.4. INSTALLATION

A. Piping Systems

1. General:

a). Install all insulation materials and accessories in accordance with manufacturer's published instructions and recognized industry practices to ensure that it will serve its intended purpose.

b). Install insulation on piping subsequent to installation of heat tracing, painting, testing, and acceptance tests.

c). Install insulation materials with smooth and even surfaces. Insulate each continuous run of piping with full-length units of insulation, with single cut piece to complete run. Do not use cut pieces or scraps abutting each other. Butt insulation joints firmly to ensure complete, tight fit over all piping surfaces.

d). Maintain the integrity of factory-applied vapor barrier jacketing on all pipe insulation, protecting it against puncture, tear or other damage. Seal all tears, punctures and other penetrations of the pipe insulation vapor barrier coating.

e). On exposed piping, locate insulation and cover seams in least visible location.

2. Fittings: Cover valves, fittings, unions, flanges, strainers, flexible connections, expansion joints, pump bodies, strainers, blowdowns, backflow preventers, autoflow valves and similar items in each piping system using one of the following:

a). Mitered sections of insulation equivalent in thickness and composition to that installed on straight pipe runs.

b). Cold pipe fittings: Apply a tack coat of vapor barrier coating and reinforcing mesh to produce a smooth surface. After ½ hour, apply a second coat of same vapor barrier coating, UL labeled, Type C, for cold water piping.

c). Hot pipe fittings and Type H for hot water piping: Apply tack of breather mastic. Wrap fitting with fiberglass reinforcing cloth overlapping adjoining sections of pipe insulation by 2-inches. Apply a second coat of Type C or Type H breather mastic over the reinforcing cloth, working it to a smooth finish.

d). Insulation cement equal in thickness to the adjoining insulation.

e). PVC fitting covers insulated with material equal in thickness and composition to adjoining insulation.

3. Penetrations: Extend piping insulation without interruption through walls, floors, and similar piping penetrations, except where otherwise specified.

4. Joints:

a). Butt pipe insulation against hanger inserts. For hot pipes, apply 3-inch (7.5cm) wide vapor barrier tape or bank over butt joints. For cold piping, apply wet coat of vapor barrier lap cement on butt joints, and seal joints with 3-inch (7.5cm) wide vapor barrier tape or band.

b). All pipe insulation ends shall be tapered and sealed, regardless of service.

5. For heat traced piping, insulate fittings, joints, and valves with insulation of like material, thickness and finish as adjoining pipe. Size insulation large enough to enclose pipe and heat trace. Cover with aluminum jacket with seams located on bottom side of horizontal piping.

6. Aluminum jacketing shall be utilized for exterior above ground applications. Seal all aluminum jacketing laps with 1/8" bead of metal jacketing sealant to prevent water entry.

B. Equipment Insulation:

1. General:

a). Install insulation in accordance with manufacturer's published instructions and recognized industry practices to ensure that it will serve its intended purpose.

b). Install insulation on equipment after installation of heat tracing, painting, testing, and acceptance tests.

c). Install insulation materials with smooth, even surfaces. Rework poorly fitted joints. Do not use joint sealer or mastic as filler for joint gaps and excessive voids resulting from poor workmanship. Apply insulation using staggered joint method for both single and double layer installation, applying each layer of insulation separately.

d). Coat insulated surfaces where specified on contract drawings with layer of insulating cement, troweled in a workmanlike manner, leaving a smooth and continuous surface. Fill in seams, broken edges, and depressions. Cover over wire mesh and joints with cement sufficiently thick to remove surface irregularities.

e). Maintain the integrity of factory-applied vapor barrier jacketing on all insulation, protecting it against puncture, tears or other damage. Seal all tears, punctures and other penetrations of equipment insulation facing.

f). Where specification calls for field-applied all-service vapor barrier jacketing, it shall be neatly fitted and tightly secured. Lap seams 2-inches (5cm) (min.). Seal all joints with adhesive. Tape with 3-inches (7.5cm) matching pressure-sensitive tape or 3-inch (7.5cm) glass fabric and vapor barrier coating.

g). On exposed equipment, locate insulation and cover seams in least visible location.

2. Removable Insulation: Provide removable insulation sections to cover parts of equipment which must be opened periodically for maintenance, such as vessel covers, fasteners, flanges, frames accessories, manholes, handholes, cleanouts ASME stamp, and manufacturer nameplates.

3. Areas Left Uninsulated: Items such as boiler manholes, handholes, clean-outs, ASME stamp, and manufacturers' nameplates should be left uninsulated unless omitting insulation would cause a condensation problem. When such is the case, provide removable insulation and appropriate tagging to identify the presence of these items. Provide neatly beveled edges at interruptions of insulation.

4. Equipment Exposed to Weather: Protect outdoor insulation from weather by installation of weather barrier mastic protective finish or jacketing as recommended by the jacketing manufacturer.

C. Ductwork Insulation:

1. General:

a). Before installing insulation, ensure that all seams and joints in ductwork have been sealed and leak tested by the contractor responsible for the duct system. Before applying duct insulation, air ducts shall be clean and dry.

b). Install insulation in accordance with manufacturer's published instructions and recognized industry practice to ensure that it will serve its intended purpose.

c). Install insulation materials with smooth and even surfaces. Butt joints firmly together to ensure complete and tight fit over surfaces to be covered.

d). Maintain the integrity of factory-applied vapor barrier jacketing on all insulation, protecting it against puncture, tears or other damage. All staples used on ductwork insulation shall be coated with suitable sealant to maintain vapor barrier integrity and covered with pressure sensitive vapor barrier tape and vapor barrier coating as specified.

e). Insulate entire system including fittings, joints, flanges, fire dampers, flexible connections, and exposed joints. All portions of duct designated to receive duct wrap shall be completely covered with duct wrap.

f). To ensure installed thermal performance, duct wrap insulation shall be cut to "stretch-out" dimensions. Maintain specified duct insulation thickness and vapor barrier at all fittings, obstructions, and duct flanges.

g). A 2-inch (50mm) piece of insulation shall be removed from the facing at the end of the piece of duct wrap to form an overlapping stapling and taping flap.

h). Install duct wrap insulation with facing outside so that the tape flap overlaps the insulation and facing at the other end of the piece of duct wrap. Adjacent sections of duct wrap insulation shall be tightly butted with the 2-inch (50mm) stapling and taping flap overlapping. If ducts are rectangular or square, install so insulation is not excessively compressed at corners. Seams shall be stapled approximately 6-inches (150mm) on center with 2-inch (13mm) (min) steel outward clinching staples.

i). Seams, joints and staples shall be sealed with pressure-sensitive tape matching the insulation facing (either plain foil or FRK backing stock) and glass fabric and vapor barrier coating. Cloth duct tape of any color or finish using reclaimed rubber adhesives shall not be utilized on duct wrap insulation. Adjacent sections of duct wrap shall be tightly butted with the 2-inch (50mm) tape flap overlapping.

j). Where rectangular ducts are 24-inch (600mm) in width or greater, duct wrap insulation shall be additionally secured to the bottom of the duct with mechanical fasteners such as pins and speed clip washers, spaced on 18-inch (425mm) centers (maximum) to prevent sagging of insulation.

k). Seal all tears, punctures and other penetrations of the duct wrap facing using one of the above methods to provide a vapor tight system.

l). Upon completion of installation of duct wrap and before operation is to commence, visually inspect the system and verify that it has been correctly installed.

m). Open all system dampers and turn on fans to blow all scraps and other loose pieces of material out of the duct system. Allow for a means for removal of such material.

n). Check the duct system to ensure that there are no air leaks through joints.

o). No ductwork insulation shall be supported utilizing tie wire or bailing wire. Penetrations of ductwork insulation vapor barrier are prohibited.

p). Bevel and terminate insulation at access doors. Paint edges with vapor barrier mastic.

q). Install insulation board between volume dampers and sheet metal standoffs.

r). Provide removable insulation section at all pitot tube traverse points. Insulation section shall contain tether that attaches to adjacent ductwork.

2. Penetrations: Extend ductwork insulation without interruption through walls, floors and similar ductwork penetrations, except where otherwise specified.

3. Ductwork Exposed to Weather: Protect outdoor insulation from weather by installing outdoor weather barrier mastic or jacketing as recommended by the insulation manufacturer.

4. Rigid Insulation:

a). Rigid duct insulation may be impaled over welded pins and secured with insulation caps and washers matching the color of the vapor barrier facing. All seams shall be firmly butted and sealed with pressure-sensitive vapor barrier tape matching the facing and vapor barrier coating.

b). Corner angles shall be installed on all external corners of rigid duct insulation in exposed finished areas before jacketing, except oven and hood exhaust duct insulation, which shall have no corner angles.

5. Duct Wrap Insulation: Duct wrap insulation shall be applied with all joints butted firmly together. All joints in the insulation covering shall be sealed with adhesive. Duct wrap insulation shall be secured to bottom of rectangular or oval ducts over 24inches (60cm) wide with mechanical fasteners on 16-inch (40 cm) (approx.) centers to prevent sagging.

6. Duct Lining Insulation: Duct liner insulation shall be applied with all joints tightly butted using 90 percent coverage of adhesive meeting the requirements of ASTM C 916 plus mechanical fasteners spaced according to the liner manufacturer's schedule for the interior width of the plenum, housing, or air shaft. (Also refer to Division 23 Section, *HVAC Air Distribution System*.)

3.5. FIELD QUALITY ASSURANCE

A. Upon completion of all insulation work covered by this specification, visually inspect the work and verify that it has been correctly installed. This may be done while work is in progress, to assure compliance with requirements herein to cover and protect insulation materials during installation.

3.6. PROTECTION

A. Replace damaged insulation which cannot be satisfactorily repaired, including insulation with vapor barrier damage and moisture-saturated insulation.

B. The insulation contractor shall advise the general and/or the mechanical contractor as to requirements for protection of the insulation work during the remainder of the construction period, to avoid damage and deterioration of the finished insulation work.

3.7. SAFETY PRECAUTIONS

A. Insulation contractor's employees shall be properly protected during installation of all insulation. Protection shall include proper attire when handling and applying insulation materials, and shall include (but not be limited to) disposable dust respirators, gloves, hard hats, and eye protection.

B. The insulation contractor shall conduct all job site operations in compliance with applicable provisions of the Occupational Safety and Health Act, as well as with all state and/or local safety and health codes and regulations that may apply to the work.

3.8. INSULATION COVERING

A. Unless otherwise noted, all exposed duct and equipment insulation shall have a field applied PVC jacket cover neatly cut and pasted over ductwork and equipment insulation. PVC shall be high gloss white and shall be 20 mils thick.

B. Unless otherwise noted, all exposed pipe insulation required to be insulated shall be jacketed with a PVC Jacketing with fitting covers. PVC jacket shall be color fade resistant, white high gloss, U.S.D.A. authorized as manufactured by Proto Corporation or approved equal. PVC jacketing shall be high impact, ultraviolet resistant PVC. Minimum thickness shall be 20 mils, roll stock ready for shop or field cutting and forming.

C. Exposed areas include, but are not limited to, all mechanical equipment rooms/fan rooms, penthouses, boiler rooms, piping and ductwork exposed in an occupied space.

D. Where PVC jackets are indicated, install with 1 inch overlap at longitudinal seams and end joints, for horizontal applications, install with longitudinal seams along top and bottom of tanks and vessels. Seal with manufacturers recommended adhesive.

1. Apply two continuous beads of adhesive to seams and joints, one bead under lap and the finish bead along seam and joint edge.

E. Exterior exposed pipe insulation required to be insulated shall be jacketed with a corrugated aluminum jacketing system as previously described. Seal all laps with 1/8” bead metal jacketing sealant.

END OF SECTION

DIVISION 23 SECTION 230900
INSTRUMENTATION AND CONTROLS OF HVAC AND PLUMBING SYSTEMS

TABLE OF CONTENTS

PART 1. GENERAL

1.1. SUMMARY
1.2. DEFINITION
1.3. SYSTEM PERFORMANCE
1.4. DELIVERY, STORAGE AND HANDLING
1.5. COORDINATION
1.6. WORK BY OTHERS
1.7. QUALITY ASSURANCE
1.8. GUARANTEE AND INSTRUCTION
1.9. SUBMITTALS
1.10. SOFTWARE LICENSE AGREEMENT
1.11. ELECTRICAL SURGE PROTECTION
1.12. TRAINING
1.13. ALTERNATES
1.14. DELAWARE TECHNICAL COMMUNITY COLLEGE SPECIFIC REQUIREMENTS
1.15. GLOBAL SENSORS

PART 2. PRODUCTS

2.1. BUILDING MANAGEMENT SYSTEM
2.2. WIRING
2.3. CONTROLLERS
2.4. DAMPERS
2.5. HYDRONIC CONTROL VALVES
2.6. CONTROL PANELS
2.7. MISCELLANEOUS ELECTRICAL DEVICES
2.8. UNINTERRUPTIBLE POWER SUPPLY
2.9. CENTRAL CONTROL AND MONITORING SYSTEM (CCMS) (HARDWARE DESCRIPTION)
2.10. SYSTEM SOFTWARE DESCRIPTION
2.11. EXCEPTION REPORTING SEQUENCES
2.12. MONITORING SYSTEM, SENSORS AND WIRING

PART 3. EXECUTION

3.1. GENERAL
3.2. BMS SPECIFIC REQUIREMENTS
3.3. INSTALLATION AND SUPERVISION
3.4. ACCEPTANCE TESTING
3.5. VARIABLE AIR VOLUME BALANCING
3.6. COORDINATE WITH TAB AGENCY
3.7. EXAMINATION
3.8. INTERLOCK REQUIREMENTS
3.9. SUBMITTALS AT PROJECT CLOSEOUT
3.10. CONNECTIONS

3.11. FIELD QUALITY CONTROL
3.12. ADJUSTING
3.13. ON-SITE ASSISTANCE
3.14. SCHEDULING
3.15. STAGING
3.16. SEQUENCES OF OPERATION

SECTION 230900 - INSTRUMENTATION AND CONTROLS OF HVAC AND PLUMBING SYSTEMS

PART 1. GENERAL

1.1. SUMMARY

A. For General Mechanical Requirements, see Division 23 Section, *Common Work Results for HVAC*, and Division 01 Sections.

B. Comply with all code requirements and fire safety requirements as specified in Division 23 Section, *Common Work Results for HVAC*.

C. Drawings and general provisions of the Contract, including General and Supplementary Conditions and Division 01 Specification Sections, apply to this Section.

D. This Section includes control equipment for HVAC systems and components, including control components for terminal heating and cooling units not supplied with factory wired controls.

E. The automatic temperature control system ATC and central control and monitoring system (CCMS) shall be electric/electronic direct digital control (DDC), Siemens. All work associated with the automatic temperature control system shall be performed by personnel regularly and directly employed by the Automatic Temperature Controls Contractor. Control System shall be web based, allowing the client access via a standard web browser.

F. Siemens is the primary approved supplier/installer. Siemens ATC/BAS system to be extended to include this project.

G. Coordinate controls with controlled equipment. Upon completion of the work, calibrate and adjust all controls for proper function. Electric wiring, including interlock wiring for equipment such as air handlers, fans, switches, VAV units, fume hood fans, fume hood terminal units, pumps, VAV boxes, etc., shall be furnished and installed under this section. All electrical work shall conform to the applicable requirements of Division 26.

H. All automatic temperature control dampers, valves and separable wells for immersion elements furnished by the Control Manufacturer shall be installed by the Mechanical Contractor or his sheet metal subcontractor under the Control Manufacturer's supervision.

I. Reference is hereby made for this contractor to become familiar with Division 26 of these specifications. Familiarization is for coordination purposes only. The control contractor shall provide all necessary relays, contacts, interlock wiring etc. not provided under Division 26 for the automation of the ATC and CCMS systems as required by the sequence of operation and input/output schedule. The control contractor shall coordinate all requirements with the building Fire Alarm System. The control contractor shall provide all additional devices and interlock wiring required for the automation of the ATC system and monitoring of the CCMS system.

J. Furnish all labor, materials, software, equipment and services necessary for and incidental to furnishing and installing a complete direct digital control, automatic

temperature control system to meet the requirements of the sequence of operation described in Part 4.

K. Unless the necessary items are specified to be provided with mechanical equipment by Division 23, the ATC contractor shall coordinate with Division 23, Mechanical, and shall furnish and install all items necessary to meet the requirements of the Sequence of Operation and the Central Control and Monitoring System (CCMS) indicated on the drawings and as required in this specification.

L. The control system shall include all necessary and specified control equipment properly installed in accordance with the specifications and drawings and shall include, but not be limited to the automatic temperature control and energy management system of the following:

1. Air Handling Units
2. Heating Coils
3. VAV Boxes with Hot Water Heat.
4. Fume Hood Exhaust Fans
5. Fume Hood Terminal Units
6. Fume Hood Systems
7. General Exhaust Systems
8. Freeze Protection Pumps
9. Room Differential Pressures
10. Variable Speed Drives
11. Ventilation Systems

M. All labor, material, equipment and software to meet the functional intent of the system, as specified herein and as shown on the drawings, shall be included. Drawings are diagrammatic only. Equipment and labor not specifically referred to herein or on the plans, that are required to meet the functional intent, shall be provided without additional cost to the owner.

N. Where equipment is specified to be provided by equipment manufacturer or where packaged controls are specified map out all points provided by the manufacturer so the same can be viewed by ATC system. As a minimum all points indicated in the point list and control diagram must be viewable and adjustable from the ATC system. Coordinate with equipment manufacturer.

1.2. DEFINITIONS

A. DDC: Direct digital control.

B. I/O: Input/output.

C. LonWorks: A control network technology platform for designing and implementing interoperable control devices and networks.

D. MS/TP: Master slave/token passing.

E. PC: Personal computer.

F. PID: Proportional plus integral plus derivative.

G. RTD: Resistance temperature detector.

H. UPS: Uninterruptible Power Supply.

I. NAE: Network Automated Engine.

1.3. SYSTEM PERFORMANCE

A. Comply with the following performance requirements:

1. Graphic Refresh: Update graphic with minimum 20 dynamic points with current data within 8 seconds.
2. Object Command: Reaction time of less than two seconds between operator command of a binary object and device reaction.
3. Object Scan: Transmit change of state and change of analog values to control units or workstation within six seconds.
4. Alarm Response Time: Annunciate alarm at workstation within 45 seconds. Multiple workstations must receive alarms within five seconds of each other.
5. Program Execution Frequency: Run capability of applications as often as five seconds, but selected consistent with mechanical process under control.
6. Performance: Programmable controllers shall execute DDC PID control loops, and scan and update process values and outputs at least once per second.
7. Reporting Accuracy and Stability of Control: Report values and maintain measured variables within tolerances as follows:
   a). Water Temperature: Plus or minus 1 deg F (0.5 deg C).
   b). Water Flow: Plus or minus 5 percent of full scale.
   c). Water Pressure: Plus or minus 2 percent of full scale.
   d). Space Temperature: Plus or minus 1 deg F (0.5 deg C).
   e). Ducted Air Temperature: Plus or minus 1 deg F (0.5 deg C).
   f). Outside Air Temperature: Plus or minus 2 deg F (1.0 deg C).
   g). Temperature Differential: Plus or minus 0.25 deg F (0.15 deg C).
   h). Relative Humidity: Plus or minus 5 percent.
   i). Airflow (Pressurized Spaces): Plus or minus 3 percent of full scale.
   j). Airflow (Measuring Stations): Plus or minus 5 percent of full scale.
   k). Airflow (Terminal): Plus or minus 10 percent of full scale.
   l). Air Pressure (Space): Plus or minus 0.01-inch wg (2.5 Pa).
   m). Air Pressure (Ducts): Plus or minus 0.1-inch wg (25 Pa).
   n). Electrical: Plus or minus 5 percent of reading.

1.4. DELIVERY, STORAGE, AND HANDLING

A. Factory-Mounted Components: Where control devices specified in this Section are indicated to be factory mounted on equipment, arrange for shipping of control devices to equipment manufacturer.

B. System Software: Update to latest version of software at Project completion.

1.5. COORDINATION

A. Coordinate location of thermostats, humidistats, and other exposed control sensors with plans and room details before installation.

B. Coordinate supply of conditioned electrical branch circuits for control units and operator workstation.

C. Coordinate equipment with Division 26 Section, *Panelboards* to achieve compatibility with starter coils and annunciation devices.

D. Coordinate equipment with Division 26 Section, *Motor-Controllers* to achieve compatibility with motor starters and annunciation devices.

1.6. WORK BY OTHERS

A. Automatic temperature control valves, air flow stations, pipe taps, flow meters, and separable wells for immersion elements furnished by the control manufacturer shall be installed by the mechanical contractor under the control manufacturer's supervision. The control contractor shall deliver to the mechanical contractor valves and wells for installation within the various systems.

B. All automatic dampers furnished by the control manufacturer shall be installed by the mechanical contractor under the control manufacturer's supervision.

1.7. QUALITY ASSURANCE

A. The automatic temperature control (ATC) system and the central control and monitoring system (CCMS) shall be as manufactured by Siemens.

B. Supplier shall have an in-place support facility with technical staff, spare parts inventory and all necessary test and diagnostic equipment. The fully staffed and equipped office shall be within a 100 mile radius of the job site.

C. The systems shall be complete in all respects, and shall be installed by skilled personnel. The Control Contractor shall have a successful history in the installation and maintenance of automatic temperature control systems similar in size and performance to that specified herein.

D. All electrical wiring in connection with the Automatic Temperature Control System shall be furnished and installed by the ATC Contractor. This shall include all interlock wiring between the air handling units, fans, pumps, heating systems, switches, VAV boxes, dampers, static pressure controllers, fume hoods, fume hood exhaust fans, and fume hood terminal units.

E. Bids by wholesalers, contractors or franchised dealers or any other firm whose principal business is not that of manufacturing or installing automatic temperature control systems, shall not be acceptable. Bid documents that are not complete in their response to these documents or take exception to any of the capabilities defined within these documents shall not be acceptable.

F. Installer Qualifications: Automatic control system manufacturer's authorized representative who is trained and approved for installation of system components shall be

required for this Project.

G. Electrical Components, Devices, and Accessories: Listed and labeled as defined in NFPA 70, Article 100, by a testing agency acceptable to authorities having jurisdiction, and marked for intended use.

H. Comply with ASHRAE 135 for DDC system components.

1.8. GUARANTEE AND INSTRUCTION

A. The control system including all components, system software, parts and assemblies herein specified shall be free from defects in workmanship and materials under normal use and service. After completion of the installation, the Control Manufacturer shall regulate and adjust all thermostats, control valves, control motors, and other equipment provided under this contract. If within two (2) years from the date of acceptance by Owner any of the equipment herein described is proved to be defective in workmanship or materials, it will be replaced or repaired at no additional cost to the Owner. The Control Manufacturer shall, after completion, provide any service incidental to the proper performance of the Control System under guarantees outlined above for a period of two (2) years. Normal maintenance of the system is not to be considered part of the guarantee. All corrective modifications made during warranty service periods shall be updated on all user documentation including "as-built" shop drawings and on user and manufacturer archived software disks.

B. The control contractor shall completely check out, calibrate and test all connected hardware to insure that the system performs in accordance with the approved specifications and sequences of operation submitted.

C. Upon completion of the work, the control drawings encased in heavy plastic shall be provided where directed. Layout shall show all control equipment and the function of each item indicated.

D. The temperature control contractor's office shall be within a 100 mile radius of the job site.

E. The contractor shall respond to the job site with qualified technicians within a 4 hour period for any emergency relating to the control system or energy management systems.

F. This agreement shall include emergency service during normal working hours.

1.9. SUBMITTALS

A. Product Data: Include manufacturer's technical literature for each control device. Indicate dimensions, capacities, performance characteristics, electrical characteristics, finishes for materials, and installation and startup instructions for each type of product indicated.

1. DDC System Hardware: Bill of materials of equipment indicating quantity, manufacturer, and model number. Include technical data for operator workstation equipment, interface equipment, control units, transducers/transmitters, sensors, actuators, valves, relays/switches, control

panels, and operator interface equipment.

2. Control System Software: Include technical data for operating system software, operator interface, color graphics, and other third-party applications.

3. Controlled Systems: Instrumentation list with element name, type of device, manufacturer, model number, and product data. Include written description of sequence of operation including schematic diagram.

B. Shop Drawings: Detail equipment assemblies and indicate dimensions, weights, loads, required clearances, method of field assembly, components, and location and size of each field connection.

1. Bill of materials of equipment indicating quantity, manufacturer, and model number.

2. Schematic flow diagrams showing equipment, fans, pumps, coils, dampers, valves, and control devices.

3. Wiring Diagrams: Power, signal, and control wiring.

4. Details of control panel faces, including controls, instruments, and labeling.

5. Written description of sequence of operation.

6. Schedule of dampers including size, leakage, and flow characteristics.

7. Schedule of valves including flow characteristics.

8. DDC System Hardware:
   a). Wiring diagrams for control units with termination numbers.
   b). Schematic diagrams and floor plans for field sensors and control hardware.
   c). Schematic diagrams for control, communication, and power wiring, showing trunk data conductors and wiring between operator workstation and control unit locations.

9. Control System Software: List of color graphics indicating monitored systems, data (connected and calculated) point addresses, output schedule, and operator notations.

10. Controlled Systems:
    a). Schematic diagrams of each controlled system with control points labeled and control elements graphically shown, with wiring.
    b). Scaled drawings showing mounting, routing, and wiring of elements including bases and special construction.
    c). Written description of sequence of operation including schematic diagram.
    d). Points list.

C. Data Communications Protocol Certificates: Certify that each proposed DDC system

component complies with LonWorks or Bacnet.

D. Software and Firmware Operational Documentation: Include the following:

1. Software operating and upgrade manuals.

2. Program Software Backup: On a magnetic media or compact disc, complete with data files.

3. Device address list.

4. Printout of software application and graphic screens.

5. Software license required by and installed for DDC workstations and control systems.

E. Software Upgrade Kit: For Owner to use in modifying software to suit future systems revisions or monitoring and control revisions.

F. Qualification Data: For Installer and manufacturer.

G. Field quality-control test reports.

H. Operation and Maintenance Data: For HVAC instrumentation and control system to include in emergency, operation, and maintenance manuals. In addition to items specified in Division 01 Section, *Operation and Maintenance Data*, and Division 23 Section, *Common Work Results for HVAC* include the following:

1. Maintenance instructions and lists of spare parts for each type of control device.

2. Interconnection wiring diagrams with identified and numbered system components and devices.

3. Keyboard illustrations and step-by-step procedures indexed for each operator function.

4. Inspection period, cleaning methods, cleaning materials recommended, and calibration tolerances.

5. Calibration records and list of set points.

I. Upon completion of the work, provide a complete set of "as-built" drawings and application software on CD, USB, or other type of electronic storage device. Drawings shall be provided in format as acceptable to the Owner’s files. Submit as-built drawings and specification to Owner's representative for review and approval prior to final project closeout.

1.10. SOFTWARE LICENSE AGREEMENT

A. The owner shall sign a copy of the manufacturer's standard software and firmware licensing agreement as a condition of this contract. Such license shall grant use of all programs and application software to owner as defined by the manufacturer's license

agreement, but shall protect manufacturer's rights to disclosure of trade secrets contained within such software.

B. Software license agreement shall not apply on projects where existing ATC system is being extended.

1.11. ELECTRICAL SURGE PROTECTION

A. It is the responsibility of the ATC/FMS contractor to provide adequate surge protection for all wall mounted control panels required for this project.

1. Devices under surge protection shall be of design that loss of memory will not occur in the event of the surge protection device being activated due to surge/spike conditions.

2. Surge protection devices will be required to be hard wired, with the exception of peripheral devices that use standard 110VAC plugs for connections (i.e. Modems).

3. Surge protection devices are to be rated for 120 VAC single phase, 20 (or greater) amps capacity.

4. Surge Protection devices to include internal fuse protection, audible surge alarm & LED indicators.

5. Surge protectors to have clamping voltage of 480V peak, maximum surge current rating of 50,000 amps. Unit to have NEMA 12 enclosure with wall mounting bracket and conduit connection.

1.12. TRAINING

A. The Automatic Temperature Controls (ATC) Contractor shall include in his bid, provisions for additional computer training at the company’s regular school or training center. The ATC contractor shall include in his bid all costs associated with sending one (1) individual to the ATC contractors school for a period of not less than two (2) weeks. This training is in addition to the aforementioned training required under the General Provisions.

B. The training time period shall be coordinated with the school system's facility Engineer. The schedule training period shall be arranged at the owner's convenience.

C. Cost shall include all training material, instruction books, and two copies of video tape with sound DVD of training session.

D. Upon completion of the work, the Control Contractor shall have completely adjusted the entire control system. He shall arrange to instruct the Owner's representative on the operation of the control system for a period of not less than eight (8) hours. All training shall be by the control contractor and shall utilize specified manuals and as-built documentation.

E. Engage a factory-authorized service representative to train Owner's maintenance

personnel to adjust, operate, and maintain control systems and components.

1. Train Owner's maintenance personnel on procedures and schedules for starting and stopping, troubleshooting, servicing, and maintaining equipment and schedules.
2. Provide operator training on data display, alarm and status descriptors, requesting data, executing commands, calibrating and adjusting devices, resetting default values, and requesting logs. Include a minimum of 40 hours' dedicated instructor time on-site.
3. Review data in maintenance manuals. Refer to Division 01 Section, *Contract Closeout.*
4. Review data in maintenance manuals. Refer to Division 01 Section, *Operation and Maintenance Data*.
5. Schedule training with Owner, through Architect, with at least seven days' advance notice.

1.13. ALTERNATES

A. Refer to Division 01 Section, *Alternates* for description of work under this section affected by alternates.

1.14. DELAWARE TECHNICAL COMMUNITY COLLEGE SPECIFIC REQUIREMENTS

A. The ATC Subcontractor shall include in his bid all costs associated with incorporating the following specific requirements:

1. All holiday schedules shall incorporate a 12 month block. Coordinate exact holidays, schedules, calendars, occupied, unoccupied periods with Owner prior to writing software. All schedules shall be reviewed and approved by the Owner.

2. Relays for ATC equipments shall not be located in ceilings. All relays shall be located in equipment control panels and/or mechanical rooms.

3. All exhaust fans shall be assigned a designated point. Utilizing relays to provide digital point for exhaust fans shall not be acceptable.

4. Graphics on ATC computer shall in addition to basic requirements indicate the percentage open or closed on all valves and dampers.

5. The ATC Computer Graphics shall incorporate the final room numbers actually utilized in the Lab Building. All room names utilized in the graphic display shall be reviewed and approved by the Owner.

6. The ATC Computer Graphics shall indicate for each item of equipment the “on” or “off” status and command shall be “run” or “stop”.

7. All Temperature Sensors, equipment, current sensors, differential pressure sensors, etc indicated on ATC Control Diagrams and point list shall be displayed on the ATC Computer Graphic. Measured value or status shall be

displayed.

8. The exact space temperature set points, changeover set points. etc., shall be coordinated with Owner prior to final data entry. All items indicated in sequences of Operation as "adjustable" shall be reviewed and approved by Owner prior to implementation of the same.

9. Provide a graphic of all floor plans indicating location of all equipment interlocked with ATC System including all control panels.

10. Graphic shall also indicate area of building served by each item of equipment. Graphics shall indicate all global sensor readings.

11. All equipment shall be labeled with name of equipment, area served, and area location (room name/number).

1.15. GLOBAL SENSORS

A. General

1. Furnish and install global sensors and report the same on the automatic temperature control system.

2. Global sensors shall monitor and trend the following conditions:

a). Outside air temperature.

b). Outside air humidity.

c). All ventilation fan speeds where variable frequency drives are specified.

d). All ventilation fan amperage where variable frequency drives are specified.

e). All fan speeds where variable frequency drives are specified.

f). All fan amperages where variable speed fans are indicated. Graphic shall also indicate area of building served by each item of equipment.

g). Global holiday schedules:

i. Provide all interlock wiring and programming to allow a global holiday schedule for all equipment except the administration equipment. Global holiday schedule shall allow the Owner to shut down the entire school's HVAC systems if an unscheduled event occurs when school is cancelled.

ii. System shall also be capable of individual scheduling of equipment as specified or all can be globally modified at once.

h). All equipment interlocked with ATC system shall be able to be turned

on/off via ATC system as specified. Changing temperature set point alone is not acceptable method for turning equipment on/off.

i). Where valve or damper position is indicated ATC graphic shall indicate percentage open or percentage closed.

PART 2. PRODUCTS

2.1. BUILDING MANAGEMENT SYSTEM

A. The Building Management System (BMS) shall use an open architecture and fully support a multi-vendor environment. To accomplish this effectively, the BMS shall support open communication protocol standards and integrate a wide variety of third-party devices and applications. The system shall be designed for use on the Internet, or intranets using off the shelf, industry standard technology compatible with other owner provided networks.

B. The Building Management System shall consist of the following:

1. Standalone Network Automation Engine(s)

2. Field Equipment Controller(s)

3. Input/Output Module(s)

4. Local Display Device(s)

5. Portable Operator's Terminal(s)

6. Distributed User Interface(s)

7. Network processing, data storage and communications equipment

8. Other components required for a complete and working BMS

C. The system shall be modular in nature, and shall permit expansion of both capacity and functionality through the addition of sensors, actuators, controllers and operator devices, while re-using existing controls equipment.

D. System architectural design shall eliminate dependence upon any single device for alarm reporting and control execution. The failure of any single component or network connection shall not interrupt the execution of control strategies at other operational devices.

E. Acceptable Manufacturers

1. Johnson Controls, Reliable, Siemens, Honeywell, Automated Logic Cooperation, Schneider Electric, Advanced Power, Trane, Alerton, or TAC Controls by Schneider Electric.

F. Automation Network

1. The automation network shall be based on a PC industry standard of Ethernet TCP/IP. Where used, LAN controller cards shall be standard "off the shelf" products available through normal PC vendor channels.

2. The automation network shall be capable of operating at a communication speed of 100 Mbps, with full peer-to-peer network communication.

3. System controllers shall reside on the automation network.

4. The automation network will be compatible with other enterprise-wide networks. Where indicated, the automation network shall be connected to the enterprise network and share resources with it by way of standard networking devices and practices.

G. Control Network

1. System controllers shall provide supervisory control over the control network and shall support all three (3) of the following communication protocols:

   a). Siemens P1/P2 seriel
   b). BACnet Standard MS/TP Bus Protocol ASHRAE SSPC-135, Clause 9.
   c). LonWorks enabled devices using the Free Topology Transceiver (FTT-10a).

2. Control networks shall provide either "Peer-to-Peer," Master-Slave, or Supervised Token Passing communications, and shall operate at a minimum communication speed of 9600 baud.

3. DDC Controllers shall reside on the control network.

4. Control network communication protocol shall be BACnet Standard MS/TP Bus Protocol ASHRAE SSPC-135.

5. A BACnet Protocol Implementation Conformance Statement shall be provided for each controller device (master or slave) that will communicate on the BACnet MS/TP Bus.

6. The Conformance Statements shall be submitted 10 day prior to bidding.

H. Integration

1. Hardwired

   a). Analog and digital signal values shall be passed from one system to another via hardwired connections.
   b). There will be one separate physical point on each system for each point to be integrated between the systems.

2. BACnet Protocol Integration – BACnet

a). The neutral protocol used between systems will be BACnet over Ethernet and comply with the ASHRAE BACnet standard 135-2003.
b). A complete Protocol Implementation Conformance Statement (PICS) shall be provided for all BACnet system devices.
c). The ability to command, share point object data, change of state (COS) data and schedules between the host and BACnet systems shall be provided.

I. Dedicated User Interface

1. Where required by the Owner, the BMS Contractor shall provide and install a personal computer for command entry, information management, network alarm management, and database management functions. All real-time control functions, including scheduling, history collection and alarming, shall be resident in the BMS Network Automation Engines to facilitate greater fault tolerance and reliability.

2. Dedicated User Interface Architecture – The architecture of the computer shall be implemented to conform to industry standards, so that it can accommodate applications provided by the BMS Contractor and by other third party applications suppliers, including but not limited to Microsoft Office Applications. Specifically it must be implemented to conform to the following interface standards.

a). Microsoft Internet Explorer for user interface functions
b). Microsoft Office Professional for creation, modification and maintenance of reports, sequences other necessary building management functions
c). Microsoft Outlook or other e-mail program for supplemental alarm functionality and communication of system events, and reports
d). Required network operating system for exchange of data and network functions such as printing of reports, trends and specific system summaries.

3. Computer Hardware – The personal computer(s) shall be minimally configured to latest College Standard.

4. Operating System Software

a). Latest version of Windows.
b). Where user interface is not provided via browser, provide complete operator workstation software package, including any hardware or software keys. Include the original installation disks and licenses for all included software, device drivers, and peripherals.
c). Provide software registration cards to the Owner for all included software.

J. Distributed Web Based User Interface

1. All features and functions of the dedicated user interface previously defined in this document shall be available on any computer connected directly or via a wide area or virtual private network (WAN/VPN) to the automation network

and conforming to the following specifications.

2. The software shall run on the Microsoft Internet Explorer (6.0 or higher) browser.

3. Minimum hardware requirements shall be per the latest college standard.

K. User Interface Application Components

1. Operator Interface

a). An integrated browser based client application shall be used as the user operator interface program.
b). All Inputs, Outputs, Setpoints, and all other parameters as defined within Part 3 or Part 4, shown on the design drawings, or required as part of the system software, shall be displayed for operator viewing and modification from the operator interface software.
c). The user interface software shall provide help menus and instructions for each operation and/or application.
d). All controller software operating parameters shall be displayed for the operator to view/modify from the user interface. These include: setpoints, alarm limits, time delays, PID tuning variables, run-times, point statistics, schedules, and so forth.
e). The Operator Interface shall incorporate comprehensive support for functions including, but not necessarily limited to, the following:

i. User access for selective information retrieval and control command execution
ii. Monitoring and reporting
iii. Alarm, non-normal, and return to normal condition annunciation
iv. Selective operator override and other control actions
v. Information archiving, manipulation, formatting, display and reporting
vi. FMS internal performance supervision and diagnostics
vii. On-line access to user HELP menus
viii. On-line access to current FMS as-built records and documentation
ix. Means for the controlled re-programming, re-configuration of FMS operation and for the manipulation of FMS database information in compliance with the prevailing codes, approvals and regulations for individual FMS applications.
x. The operation of the control system shall be independent of the user interface, which shall be used for operator communications only. Systems that rely on an operator workstation to provide supervisory control over controller execution of the sequences of operations or system communications shall not be acceptable.

2. Navigation Trees

a). The system will have the capability to display multiple navigation trees that will aid the operator in navigating throughout all systems and points

connected. At minimum provide a tree that identifies all systems on the networks.

b). Provide the ability for the operator to add custom trees. The operator will be able to define any logical grouping of systems or points and arrange them on the tree in any order. It shall be possible to nest groups within other groups. Provide at minimum 5 levels of nesting.

c). The navigation trees shall be "dockable" to other displays in the user interface such as graphics. This means that the trees will appear as part of the display, but can be detached and then minimized to the Windows task bar or closed altogether. A simple keystroke will reattach the navigation to the primary display of the user interface.

3. Alarms

a). Alarms shall be routed directly from Network Automation Engines to PCs and servers. It shall be possible for specific alarms from specific points to be routed to specific PCs and servers. The alarm management portion of the user interface shall, at the minimum, provide the following functions:

i. Log date and time of alarm occurrence.
ii. Generate a "Pop-Up" window, with audible alarm, informing a user that an alarm has been received.
iii. Allow a user, with the appropriate security level, to acknowledge, temporarily silence, or discard an alarm.
iv. Provide an audit trail on hard drive for alarms by recording user acknowledgment, deletion, or disabling of an alarm. The audit trail shall include the name of the user, the alarm, the action taken on the alarm, and a time/date stamp.
v. Provide the ability to direct alarms to an e-mail address or alphanumeric pager. This must be provided in addition to the pop up window described above. Systems that use e-mail and pagers as the exclusive means of annunciating alarms are not acceptable.
vi. Any attribute of any object in the system may be designated to report an alarm.

b). The FMS shall annunciate diagnostic alarms indicating system failures and non-normal operating conditions

c). The FMS shall annunciate application alarms as required.

4. Reports and Summaries

a). Reports and Summaries shall be generated and directed to the user interface displays, with subsequent assignment to printers, or disk. As a minimum, the system shall provide the following reports:

i. All points in the BMS
ii. All points in each BMS application
iii. All points in a specific controller
iv. All points in a user-defined group of points

v. All points currently in alarm
vi. All points locked out
vii. All BMS schedules
viii. All user defined and adjustable variables, schedules, interlocks and the like.

b). Summaries and Reports shall be accessible via standard UI functions and not dependent upon custom programming or user defined HTML pages.
c). Selection of a single menu item, tool bar item, or tool bar button shall print any displayed report or summary on the system printer for use as a building management and diagnostics tool.
d). The system shall allow for the creation of custom reports and queries via a standard web services XML interface and commercial off-the-shelf software such as Microsoft Access, Microsoft Excel, or Crystal Reports.

5. Schedules

a). A graphical display for time-of-day scheduling and override scheduling of building operations shall be provided. At a minimum, the following functions shall be provided:

i. Weekly schedules
ii. Exception Schedules
iii. Monthly calendars

b). Weekly schedules shall be provided for each group of equipment with a specific time use schedule.
c). It shall be possible to define one or more exception schedules for each schedule including references to calendars
d). Monthly calendars shall be provided that allow for simplified scheduling of holidays and special days for a minimum of five years in advance. Holidays and special days shall be user-selected with the pointing device or keyboard, and shall automatically reschedule equipment operation as previously defined on the exception schedules.
e). Changes to schedules made from the User Interface shall directly modify the Network Automation Engine schedule database.
f). Schedules and Calendars shall comply with ASHRAE SP135/2003 BACnet Standard.
g). Selection of a single menu item or tool bar button shall print any displayed schedule on the system printer for use as a building management and diagnostics tool.

6. Password

a). Multiple-level password access protection shall be provided to allow the user/manager to user interface control, display, and database manipulation capabilities deemed appropriate for each user, based on an assigned password.
b). Each user shall have the following: a user name (24 characters minimum), a password (12 characters minimum), and access levels.
c). The system shall allow each user to change his or her password at will.

d). When entering or editing passwords, the system shall not echo the actual characters for display on the monitor.

e). A minimum of five levels of access shall be supported individually or in any combination as follows:

i. Level 1 = View Data
ii. Level 2 = Command
iii. Level 3 = Operator Overrides
iv. Level 4 = Database Modification
v. Level 5 = Database Configuration
vi. Level 6 = All privileges, including Password Add/Modify

f). A minimum of 100 unique passwords shall be supported.

g). Operators shall be able to perform only those commands available for their respective passwords. Display of menu selections shall be limited to only those items defined for the access level of the password used to log-on.

h). The system shall automatically generate a report of log-on/log-off and system activity for each user. Any action that results in a change in the operation or configuration of the control system shall be recorded, including: modification of point values, schedules or history collection parameters, and all changes to the alarm management system, including the acknowledgment and deletion of alarms.

7. Screen Manager - The User Interface shall be provided with screen management capabilities that allow the user to activate, close, and simultaneously manipulate a minimum of 4 active display windows plus a network or user defined navigation tree.

8. Dynamic Color Graphics

a). The graphics application program shall be supplied as an integral part of the User Interface. Browser or Workstation applications that rely only upon HTML pages shall not be acceptable.

b). The graphics applications shall include a create/edit function and a runtime function. The system architecture shall support an unlimited number of graphics documents (graphic definition files) to be generated and executed.

c). The graphics shall be able to display and provide animation based on real-time data that is acquired, derived, or entered.

d). Graphics runtime functions – A maximum of 16 graphic applications shall be able to execute at any one time on a user interface or workstation with 4 visible to the user. Each graphic application shall be capable of the following functions:

i. All graphics shall be fully scalable
ii. The graphics shall support a maintained aspect ratio.
iii. Multiple fonts shall be supported.
iv. Unique background shall be assignable on a per graphic basis.
v. The color of all animations and values on displays shall indicate the status of the object attribute.

e). Operation from graphics – It shall be possible to change values

(setpoints) and states in system controlled equipment by using drop-down windows accessible via the pointing device

f). Graphic editing tool – A graphic editing tool shall be provided that allows for the creation and editing of graphic files. The graphic editor shall be capable of performing/defining all animations, and defining all runtime binding.

i. The graphic editing tool shall in general provide for the creation and positioning of point objects by dragging from tool bars or drop-downs and positioning where required.

ii. In addition, the graphic editing tool shall be able to add additional content to any graphic by importing backgrounds in the SVG, BMP or JPG file formats.

g). Aliasing – Many graphic displays representing part of a building and various building components are exact duplicates, with the exception that the various variables are bound to different field values. Consequently, it shall be possible to bind the value of a graphic display to aliases, as opposed to the physical field tags.

9. Historical trending and data collection

a). Each Automation Engine shall store trend and point history data for all analog and digital inputs and outputs, as follows:

i. Any point, physical or calculated, may be designated for trending. Two methods of collection shall be allowed:

- Defined time interval
- Upon a change of value.

ii. Each Automation Engine shall have the capability to store multiple samples for each physical point and software variable based upon available memory, including an individual sample time/date stamp. Points may be assigned to multiple history trends with different collection parameters.

b). Trend and change of value data shall be stored within the engine and uploaded to a dedicated trend database or exported in a selectable data format via a provided data export utility. Uploads to a dedicated database shall occur based upon one of the following: user-defined interval, manual command, or when the trend buffers are full. Exports shall be as requested by the user or on a time scheduled basis.

10. Trend data viewing and analysis

a). Provide a trend viewing utility that shall have access to all database points.

b). It shall be possible to retrieve any historical database point for use in displays and reports by specifying the point name and associated trend name.

c). The trend viewing utility shall have the capability to define trend study

displays to include multiple trends

d). Displays shall be able to be single or stacked graphs with on-line selectable display characteristics, such as ranging, color, and plot style.

e). Display magnitude and units shall both be selectable by the operator at any time without reconfiguring the processing or collection of data. This is a zoom capability.

f). Display magnitude shall automatically be scaled to show full graphic resolution of the data being displayed.

g). Trend studies shall be capable of calculating and displaying calculated variables including highest value, lowest value and time based accumulation.

2.2. WIRING

A. The multi-conductor cable for field wiring of electronic analog sensors shall be minimum No. 22 AWG, 300 volt, thermoplastic with stranded copper wire and 100 percent shield coverage. The number of conductors in each sensor cable shall be as determined by the Contractor. 2/c #22 shielded cables shall be Belden Cat. #8451 3/c #20 shielded cables shall be Belden Cat. #9770 or approved equivalent.

B. Conductors for digital sensors or contact control shall be the same as for the analog sensors, except the grounded shield is not required.

C. Individual conductors shall be color coded and in addition shall be numbered in the field to identify the particular terminal to which attached. Field numbering shall be performed with Brady or approved equivalent markers wrapped around the wire near the terminal connection. All wires shall be terminated with pressure type connectors suitable for wire size, material and terminal connection.

D. All exposed wiring or wiring concealed in partitions shall be installed in a designated conduit raceway. The conduit shall conform to Division 26 of the specification. Where wiring is installed in an air plenum the same shall be plenum rated cable.

E. All junction boxes shall have covers painted *safety green*, and be rigid steel.

2.3. CONTROLLERS

A. Temperature sensor covers shall be stainless steel wire guard type with vandal proof screws. All room temperature sensors shall be mounted 4'-0 inches above the finished floor, except in stairways, corridors and toilets, which shall be 7'-0 inches. Provide insulating bases where temperature sensors are located on exterior or unconditioned walls. Each temperature sensor shall have adjustable limit stops and adjustable sensitivity. User adjustment shall be 2 degrees F above and below set points or as determined by the Owner. Room temperature sensors shall include range of 55 degrees F to 85 degrees F set point adjustment. Temperature sensors shall include set-point adjustors, U.L. approved for mounting base in air plenums, and RJ-11 jack for communications. Room temperature sensors shall be fully adjustable and shall display set point and actual temperature.

B. Space sensor wiring shall be installed concealed where possible. Should the Division 23 Contractor be unable to do so then surface metal raceway shall be utilized as specified in

Division 26.

C. Room temperature sensors shall be accessible to ADA occupants.

2.4. DAMPERS

A. Control Dampers

1. The temperature control contractor shall provide all automatic control dampers of the types indicated on the plans and not specified to be integral with other equipment. Frames shall be not less than 16 gauge galvanized steel. Blades shall not be over 6 inches wide airfoil shaped double skin construction of 14 gauge equivalent thickness. Bearings shall be stainless steel sleeves with 2 inch shafts. Blade edge seals shall be vinyl blade with flexible metal compressible jamb seals of the tight-seal spring type. Dampers and seals shall be suitable for temperature ranges of -40 to 250 degrees F.

2. All proportional control dampers shall be opposed blade type and all two-position dampers shall be parallel blade type.

3. Dampers shall be sized to meet flow requirements of the application. The sheet metal contractor shall furnish and install baffles to fit the damper to duct size. Baffles shall not exceed 6 inches.

4. Dampers shall be minimum leakage type to conserve energy and the temperature control manufacturer shall submit leakage and flow characteristic data for all control dampers with the temperature control submittal. Maximum leakage shall be 3 CFM/Sq. Ft. at static pressure of 1 inch W.C. for a damper width of 48 inches.

5. Ultra-low leakage dampers shall have blade edges fitted with replaceable, snap-on, inflatable seals to limit damper leakage to 2 percent at applied static pressure.

6. Medium and Low pressure rectangular control dampers shall be Type CD60 airfoil low leakage damper as manufactured by Ruskin or as approved equal of American Warming and Ventilating, Air Balance and Arrow.

7. Round control dampers shall be Type CERS25 with blade edge seals as manufactured by Ruskin or as approved equal.

8. Fume hood control damper and dampers mounted in stainless steel ductwork shall be Type 304 stainless steel construction, heavy duty control damper with blade edge seals suitable for fume hood, chemical service Type LGE as manufactured by Siemens or as approved equal.

B. Damper Operators

1. Electric damper actuators shall be properly sized to provide sufficient torque to position the damper throughout its operating range.

2. Use devices which are quiet in operation and which in the event of power failure, will "fail safe" by spring action in either the normally open or normally closed position as required for freeze, moisture, smoke, or fire protection.

3. Electric actuators requiring a 24 VAC power supply will be utilized. Motors shall be specifically designed and sized with proper torque according to requirements of the device it is to be used on (i.e.: valve, damper). Each actuator will accept the proper control input as the system is designed, (i.e,: floating, 0-10VDC, 4-20Ma etc.) without the need for any additional interface devices.

4. For all exterior damper operators provide NEMA 4X stainless steel corrosion resistant enclosure. Damper operator enclosure shall be model ZS-300 as manufactured by Belimo or approved equal.

2.5. HYDRONIC CONTROL VALVES

A. All automatic control valves 2 inches and smaller shall be screwed type, and valves 2 ½ inches and larger shall be flanged. Valves shall be factory-rated to withstand the pressures encountered. Valves shall have stainless-steel stems and spring loaded Teflon packing with replaceable seats and discs. All control valves must be capable of withstanding the shut-off head of the pump, they are connected to without the valve seat lifting. Valves shall have stainless steel stems and spring loaded Teflon packing with replaceable seats and discs.

1. All modulating straight-through water valves shall be provided with equal-percentage contoured throttling plugs. All three-way valves shall be provided with linear throttling plugs such that the total flow through the valve shall remain constant regardless of the valve's position modulating. Valves shall be sized for a pressure drop equal to the coil they serve but not to exceed 5 psi. Valves shall have replaceable seats and discs.

2. Where applicable, all two (2) position (i.e. “open”/ “closed”) control valves may be furnished with hose kits at Contractor's option. Coordinate actuator and pressure drop requirements with hose kit supplier. Maximum allowable pressure drop for two (2) position control valves shall be 3 feet at scheduled flow rate. Control valves used for non-modulating applications (i.e. “open” / “closed”) shall be full line size not reduced in size due to the lack of need for value authority

3. Optional accessories shall include a stem packing lubricator for factory or field assembly. Valve stem packing shall be low friction, tight sealing Teflon.

4. Unitary valves shall be straight-through or three way type as specified in the sequence of operation with high-pressure connections suitable for copper pipe and rated for 250 psig. Stems shall be polished stainless-steel and packing shall be ethylene-propylene suitable for both chilled water and 250 degree hot water service. Straight-through valves shall have back-seating feature, to allow packing to be replaced without draining system.

5. All valves shall use guided valve plugs for good seating and reliable operation.

Valves ½ inch to 1 inch shall be ANSI Class 125 brass body with screwed ends. Valves 1-1/4 inches to 2 inches shall be ANSI Class 150 brass body with screwed ends. Valves 2-1/2 inches to 4 inches shall be Class 125 cast iron body with bronze trim and flanged ends. Valves 6 inches and larger shall be Class 125 steel body with bronze trim and flanged ends. Butterfly valves shall be DeZurick HIGH performance or Keystone Keylock, Lug style as specified in Division 23 Section, *HVAC Piping, Fittings, and Valves*.

6. All heating coil valves shall be normally open to the coil.

B. Control Valve Operators

1. Electric valve actuators shall be properly sized to provide sufficient torque to position valves throughout its operating range.

2. Use devices which are quiet in operation and which in the event of power failure, will "fail safe" by spring action in either the normally open or normally closed position as required for freeze, moisture, smoke, or fire protection. Spring return valves are required for all control valves where coils are exposed to outside air conditions.

3. Electric actuators requiring a 24VAC power supply will be utilized. Motors shall be specifically designed and sized with proper torque according to requirements of the device it is to be used on (i.e: valve, damper). Each actuator will accept the proper control input as the system is designed, (i.e.: floating, 0-10VDC, 4-10Ma etc.) without the need for any additional interface devices.

2.6. CONTROL PANELS

A. Furnish and install local panels for ATC devices. Control panels shall be fully enclosed cabinets, all steel construction and shall meet the requirements of NEMA 1 enclosures. Cabinet shall have piano hinged door with a locking latch. All cabinet locks shall use common key. Provide means of storing control system instructions and drawings inside cabinet for future reference. Panel shall be wall mounted or free standing and located where directed by the Contract Drawings or Engineer.

1. Each panel shall have all internal devices factory wired to a numbered terminal strip. Controllers and associated devices shall be mounted within the panel, accessible through a hinged door.

2. All ATC panels shall be provided with integral disconnect, wiring, and control transformers.

3. Any ATC control panel that is serving equipment on the emergency generator must be powered by an emergency generator fed circuit/electrical panel. Refer to electrical contract documents for all emergency powered equipment.

2.7. MISCELLANEOUS ELECTRICAL DEVICES

A. Electric Actuators. All automatically controlled devices, unless specified otherwise elsewhere, shall be provided with electric actuators which shall be sized to operate their

appropriate loads with sufficient reserve power to provide smooth modulating action or two-position action and tight close off as specified.

B. Aquastats shall be line voltage strap on type with single pole, single throw switching. Switches shall have an adequate rating for the applied load. All wiring from aquastats to domestic recirculating pumps shall be by ATC contractor.

2.8. UNINTERRUPTIBLE POWER SUPPLY

A. Furnish, size and install uninterruptible power supplies at all ATC panels served by emergency power circuits.

B. Provide all interlock and power wiring from U.P.S. to control panels as required.

C. UPS's shall be sized for the ATC panel load and shall provide at least 2 minutes of full load power in the event of a power outage.

D. UPS shall be furnished with plug and cord and shall be powered from emergency power receptacles as indicated under Division 26.

E. Refer to electrical Contract Documents for all equipment served by the generator. All ATC panels for such equipment must be provided with a UPS.

2.9. CENTRAL CONTROL AND MONITORING SYSTEM (CCMS) (HARDWARE DESCRIPTION)

A. General

1. The Facilities Management Control System (FMCS) shall be comprised of a network of various independent, Stand-alone Digital Controllers (SDC'S), Mechanical System Digital Controllers (MSDC's), Air Handler Digital Controllers (AHDC's), Unitary Digital Controllers (UDC's), Variable Air Volume Digital Controllers (VAVDC's); together with Centralized Control Stations (CCS), and Centralized Host Stations (CHS) as specified, to provide centralized access and facility wide control functions. The SDC's, MSDC's, AHDC's, UDC's and VAVDC's shall be interconnected in a communicating network to provide facility wide access and sharing of information. A Gateway Digital Controller (GDC's) shall be provided to allow interface with third party microprocessor based control systems that are specified for integration within specification. A Local Area Network (LAN) shall be provided to interconnect SDC's for high-speed data transmission.

2. Specification Nomenclature

FMCS	Facility Management Control System
SDC	Stand-alone Digital Controller
MSDC	Mechanical System Digital Controller
AHDC	Air Handler Digital Controller
UDC	Unitary Digital Controller
VAVDC	Variable Air Volume Digital Controller
HHOT	Hand Held Operator Terminal

GDC	Gateway Digital Controller
GP	Graphical Programmer
CHS	Central Host Station
CCS	Central Control Station
RPTR	Communications Repeater

B. Centralized Host Stations (CHS)

1. The FMCS shall include Centralized Host Stations. CHS's shall, in conjunction with the full compliment of Digital Controllers, provide the performance requirements within this specification. Each CHS shall include all hardware and software components to serve as a centralized facility operator station, providing color graphics, facility wide access, operator initiation of global control strategies, and centralized documentation.

   The CHS shall be capable of simultaneously interfacing with the following:

   -mouse pointing device
   -two parallel printers
   -high resolution VGA color graphics monitor
   -seven auto answer/auto dial modems
   -color inkjet printer
   -two serial printers
   -three FMCS LAN interface
   -Alarm Graphic and Report FAX dial out service interface
   -Mass storage tape system

   As a minimum, the temperature control contractor shall provide the types and quantities of CHS, CCS, SDC, MSDC, AHDC, GDC, UDC, and VAV DC as required.

2. Computer

   a). The existing FMS computer located in the College's Jason Building Maintenance Office shall be utilized with the new CCMS System. Provide modem terminal, and wiring as required to interface this University's CCMS system with FMS computer. I/P data drop shall be provided adjacent to the network panels.

   b). Coordinate IP address with Owners' I.T. Department for network connection. The CCMS must be fully networkable.

   c). Provide fiber optic cable as required.

3. Operator Workstation: One PC-based microcomputer with minimum configuration per College standard.

   a). Operating System: Microsoft Windows XP Professional with high-speed Internet access.
      i. ASHRAE 135 Compliance: Workstation shall use ASHRAE 135 protocol and communicate using ISO 8802-3

(Ethernet) datalink/physical layer protocol.

ii. LonWorks Compliance: Control units shall use LonTalk protocol and communicate using EIA/CEA 709.1 datalink/physical layer protocol.

b). Application Software:

i. I/O capability from operator station.

ii. System security for each operator via software password and access levels.

iii. Automatic system diagnostics; monitor system and report failures.

iv. Database creation and support.

v. Automatic and manual database save and restore.

vi. Dynamic color graphic displays with up to 10 screen displays at once.

vii. Custom graphics generation and graphics library of HVAC equipment and symbols.

viii. Alarm processing, messages, and reactions.

ix. Trend logs retrievable in spreadsheets and database programs.

x. Alarm and event processing.

xi. Object and property status and control.

xii. Automatic restart of field equipment on restoration of power.

xiii. Data collection, reports, and logs. Include standard reports for the following:

- Current values of all objects.
- Current alarm summary.
- Disabled objects.
- Alarm lockout objects.
- Logs.

xiv. Custom report development.

xv. Utility and weather reports.

xvi. Workstation application editors for controllers and schedules.

xvii. Maintenance management.

c). Custom Application Software:

i. English language oriented.

ii. Full-screen character editor/programming environment.

iii. Allow development of independently executing program modules with debugging/simulation capability.

iv. Support conditional statements.

v. Support floating-point arithmetic with mathematic functions.

vi. Contains predefined time variables.

d). P.C. shall be the latest technology at the time of installation of the front end.

C. Centralized Control Stations (CCS)

The FMCS shall include Centralized Control Stations, as required. CCS's shall, in conjunction with the network of SDC's and additional CCS components as required, provide the performance requirements within this section of the specification. Each CCS shall include all hardware and software components to serve as a centralized facility operator station, providing facility wide access, for review and modification of global

control strategies, real time system monitoring, controller database editing or creation, and centralized documentation.

D. Local Area Networks

1. The LAN shall utilize packetized transmissions, CRC 16 error checking, and distributed error recovery. Single or multiple SDC failures shall not cause loss of communication between other LAN-connected SDC's.

2. LAN connected SDC's shall be provided with a communications watchdog to assure that an individual SDC cannot permanently occupy the LAN. If an SDC is determined to be monopolizing communications, it shall be automatically shut down and an exception reported to annunciate this fact.

3. The LAN shall employ a token passing, peer-to-peer convention, same as or similar to the industry standard format IEEE 802.4. The content of messages shall be the manufacturer's standard. The Local Area Network components shall be manufacturer's standard or available from third party vendors which utilize the same chip implementation as used by the manufacturer.

4. Industry standard ANSI, RS-485 Network Communication System, Lon, or Bacnet, or Equivalent shall be utilized.

a). Trunk Wiring Practices - General
The distributed communication network system shall consist of a multi-drop RS-485 bus architecture connecting SDC's, MSDC's, AHDC's, GDC's, UDC's and VAVDC's. The trunk shall consist of:

i. A twisted pair of wires (24 awg) completely encased in continuous metallic conduit.

ii. A twisted shielded pair of wires (24awg) with the shield grounded in accordance with the manufacturer's wiring practices.

iii. Or a dual channel, 62.5 micron fiber cabling system with ST type connectors.

There shall be no power wiring, in excess of 30 VAC rms voltage, run in conduit with communications trunk wiring. In cases where power or signal wiring is run in conduit with trunk wiring, all communications trunk wiring and power wiring shall be run using separate twisted shielded pairs (24awg) with the shields grounded in accordance with the manufacturer's wiring practices.

b). Communication Transient Protection

i. The manufacturer's catalog data sheet shall provide evidence that all FMCS products offered by the manufacturer are tested and comply with the standard for Transient Surge withstand capabilities for electrical devices ANSI C62.41, IEEE-587-1980, Categories A and B. Such testing shall have included power and

communication trunk wiring. Compliance with IEEE-587 shall imply conformance with IEEE-472 transient standards based on the stated position of ANSI and IEEE regarding applicability of the rated standards.

ii. In addition, at each building entry and exit point, the wire communications trunk wiring shall be protected with a transient surge protection device providing the minimal protection specifications of the General semiconductor, Model #422E device. Transient surge protection is not necessary if the communication trunk, external to the building, is fiber optic in nature.

iii. The communications circuitry and input/output circuitry, of the SDC's, MSDC's, AHDC's and VAVDC's, shall provide protection against a 1000 volt, 3 amp transient signal, directly applied to the communication or input/output terminations. The manufacturer's catalog data sheet shall provide evidence of conformance with this requirement. Systems not complying with this requirement shall provide equivalent protection external to the FMCS controller. Protection shall be provided for the individual communications and input/output terminations for each FMCS controller. Submittal documentation shall clearly define how this requirement will be met and how the external protection will not affect the performance of the controllers.

c). RS-485 Trunk Distance and Topology

The manufacturer's RS-485 trunk shall provide operation over end to end linear distances of 4000 feet for wire connections and 6,500 feet for fiber optic connections, without repeaters, at communication data rates of up to 64 kbps. The trunk may be extended up to 20,000 feet through the use of wire repeaters or 80,000 feet through the use of fiber optic repeaters.

At data rates of up to 19.2 kbps, the trunk distance shall be extendible to distances of up to 20,000 feet using RS-485 communication wire or fiber optic repeaters. A repeater shall be used each 4,000 feet of linear distance for wire or every 6,500 feet for fiber optics. Repeating devices shall contain separate LED indication for each communication interface trunk to indicate proper operation of the repeater as well as the communications trunks.

Contractors shall provide devices which are of FMCS control system manufacturer's design.

It shall be possible for the trunk to be "T" eed or "starred", at any location using a repeater, to facilitate the installation. Systems which do not provide this capability shall provide a trunk riser diagram showing end to end distances and locations of system topology necessary to meet the trunk diagram shown on the plans.

d). Fiber Optic Communication Trunk

The temperature control contractor shall provide a dual channel fiber optic data link, as required, to minimize the effects of transient surges caused by lightning or external EMI generating equipment. The data link shall be comprised of a single duplex cable containing two fibers (transmit and receive), of 62.5 micron construction, to accommodate data rates of up to 64 kbps.

The fiber optic trunk shall be connected to SDC devices using manufacturer's standard RS-485 to fiber optic data link modem. Repeating devices shall contain separate LED indication for each communication interface and the fiber modem, to indicate proper operation of all aspects of the device. Fiber modem devices shall be tested and conform with transient surge withstand tests for electrical devices, ANSI C62.41 IEEE-587 Categories A and B. Manufacturer's data sheet shall provide evidence of compliance with this requirement. Manufacturer's products which do not meet this minimum performance requirement shall not be acceptable.

Systems which require a special gateway controller to accommodate the fiber optic trunks, shall provide such a controller per point where the fiber optic cable enters and leaves the building. Gateway controllers shall not inhibit transfer of point data values between SDC controllers throughout the LAN. Such inhibitive systems shall not be acceptable.

In lieu of the above two options, the contractor may provide a fiber optic link to each SDC controller within the LAN. All controllers shall have access to the fiber optic link for LAN.

Fiber optic cable shall be fully tested and terminated by the temperature control contractor.

E. Air Handler Digital Controller (AHDC)

1. General

a). Controls shall be microprocessor based, Air Handler Digital Controllers (AHDC's). AHDC's shall be provided for air handling units, and other applications as required. AHDC's shall be based on a minimum 16 bit microprocessor working from software program memory which is physically located in the AHDC. The application control program shall be resident within the same enclosure as the input/output circuitry which translates the sensor signals. All input/output signal conversion shall be performed through a minimum of a 10 bit A to D converter. All input points shall be universal in nature allowing their individual function definition to be assigned through the application software. All unused input points must be available as universally definable at the discretion of the owner. If the input points are not fully universal in nature, unused points must be equal in quantity between Analog Inputs and Digital Inputs.

Contractor shall provide a minimum of one AHDC controller per air handling system as shown on the drawings.

The BAS contractor shall provide and field install all AHDC's specified under this section. Mechanical equipment manufacturers desiring to provide AHDC type controls as factory mounted equipment, shall provide a separate bid for their products less all controls, actuators, valve assemblies and sensors, which are specified to be provided by the BAS/Temperature control contractor.

b). All input/output signals shall be directly hardwired to the AHDC. Troubleshooting of input/output signals shall be easily executed with a volt-ohm-milliamp meter (VOAM). As a result of this intent, it is specified that power line carrier systems, or other systems which command multiple outputs over a single pair of wires, shall not be utilized.

c). AHDC's shall be in continuous direct communication with the network which forms the facility wide Building Automation System. The AHDC's shall communicate with the SDC at a baud rate of not less than 19,200 baud.

2. Non-Volatile Memory

a). All control sequences programmed into the AHDC shall be stored in non-volatile memory, which is not dependent upon the presence of a battery, to be retained. Power failures shall not cause the AHDC memory to be lost, nor shall there be any need for batteries to be recharged or replaced to maintain the integrity of the controller database. The AHDC shall allow for the creation of unique application control sequences. Systems that only allow selection of sequences from a library or table, are not acceptable.

b). All control sequences shall be fully programmable at the AHDC, allowing for the creation and editing of an application control sequence, while at the unit.

c). The AHDC shall be provided with an interface port for the HHOT. The interface port shall allow the HHOT to have full functionality as described. From the interface port, the HHOT shall be able to directly access any AHDC, UDC or VAVDC in the network.

d). The AHDC shall provide an input/output point trending utility that is capable of accumulating 48 analog point samples and 10 digital point samples, per Input/Output point. Each sample shall be taken on a user defined interval, ranging from 1 second to 255 hours per sample. The digital readings shall be on a change of state occurrence for the digital points. All samples shall be recorded with the engineering units for the value, along with a time and date identifier for each sample taken. The samples shall be protected against loss due to power interruptions

through a battery or capacitor backup method for a minimum of 30 days.

Systems unable to provide the above capability shall provide for the individual Input/Output point treading at the SDC. Specifics as to how each AHDC point will be trended, at the SDC, shall be provided in the submittal documents. Included in the explanation shall be the sample intervals, the memory allocation in the SDC and the number of AHDC's per SDC that can be expected.

e). The AHDC shall provide LED indication of transmit/receive communications performance, as well as for the proper/improper operation of the controller itself.

f). The AHDC shall be provided with a battery backed time clock that is capable of maintaining the time of day and calendar for up to thirty days, upon loss of power to the AHDC, without loss of setting. The battery for the time clock shall be replaceable by the customer. The AHDC shall be provided with integral time schedules; as a minimum, two seven day schedules with eight on/off periods per day shall be provided. Holiday override of weekly schedules shall be provided for pre-scheduling of holidays, for the year in advance.

3. Controller Location

a). To simplify controls and mechanical service troubleshooting, the AHDC shall be mounted directly in or on the controls compartment of the air handling system. The AHDC shall be provided in a NEMA 1 enclosure to accommodate direct mounting on the equipment to be controlled. The AHDC shall be constructed in a modular orientation such that service of the failed components can be done quickly and easily. The modular construction should limit the quantities of printed circuit boards to a maximum of two. All logic, control system, power supply and input/output circuitry shall be contained on a single plug-in circuit board. When required to replace a printed circuit board, it shall not be necessary to disconnect any field wiring. This shall allow all controls maintenance and troubleshooting to be made while at the air handling unit. The AHDC shall be directly wired to sensory devices, staging relays or modulating valves for heating and cooling.

b). For compatibility to the environment of the air handling unit, AHDC's shall have wide ambient ratings. AHDC's shall be rated for service from -40 Deg F (Degrees Fahrenheit) to 140 Deg F.

c). Contractor shall submit description of location of AHDC's on all mechanical and air handling equipment.

F. Unitary Digital Controller (UDC)

1. General

a). Controls shall be microprocessor based Unitary Digital Controllers

(UDC's). UDC's shall be provided for equipment as necessary. UDC's shall be based on a minimum 16 bit microprocessor working from software program memory which is physically located in the UDC. The application control program shall be resident within the same enclosure as the input/output circuitry which translates the sensor signals. All input/output signal conversion shall be performed through a minimum of a 10 bit A to D converter.

Contractor shall provide a minimum of one UDC controller per unitary system as required.

The BAS contractor shall provide and install all UDC's specified under this section. Mechanical equipment manufacturers desiring to provide UDC type controls as factory mounted equipment, shall provide a separate bid for their products less all controls, actuators, valve assemblies and sensors, which are specified to be provided by the BAS/Temperature control contractor.

b). All input/output signals shall be directly hardwired to the UDC. Troubleshooting of input/output signals shall be easily executed with a volt-ohm meter (VOM). As a result of this intent, it is specified that power line carrier systems, or other systems which command multiple outputs over a single pair of wires, shall not be utilized.

c). UDC's shall be in continuous, direct communication with the network which forms the facility wide building automation system. The UDC's shall communicate with the SDC at a baud rate of not less than 9,600 baud.

2. Non-Volatile Memory

a). All control sequences programmed into the UDC shall be stored in non-volatile memory, which is not dependent upon the presence of a battery, to be retained. Power failures shall not cause the UDC memory to be lost, nor shall there be any need for batteries to be recharge or replaced to maintain the integrity of the controller database. The UDC shall allow for the creation of unique application control sequences. Systems that allow only selection of sequences from a library or table are not acceptable.

b). All control sequences shall be fully configurable at the AHDC, allowing for the creation and change of a sequence while at the unit.

c). The UDC shall be provided with the ability to interface with the HHOT. The interface port shall be provided at the wall sensor or within the unitary equipment, as specified on the plans. The interface port shall allow the HHOT to have full functionality as described hereinbefore of this specification. From the interface port, the HHOT shall be able to directly access any AHDC, UDC, or VAVDC in the network.

d). The UDC shall provide an input/output point treading utility that is

capable of accumulating 48 analog point samples and 10 digital point samples per Input/Output point. Each sample shall be taken on a user defined interval, ranging from 1 second to 255 hours per sample. The digital readings shall be on a change of state occurrence for the digital points. All samples shall be recorded with the engineering units for the value, along with a time and date identifier for each sample taken.

Systems unable to provide the above capability shall provide for the individual input/output point treading at the SDC. Specifics as to how each UDC point will be trended, at the SDC, shall be provided in the submittal documents. Included in the explanation shall be the sample intervals, the memory allocation in the SDC and the number of UDC's per SDC that can be expected.

e). The UDC shall provide LED indication of transmit/receive communication performance, as well as for the proper/improper operation of the controller itself.

3. Controller Location

a). To simplify controls and mechanical service troubleshooting, the UDC shall be mounted directly in the controls compartment of the unitary system. The UDC shall be provided with a sheet metal or polymeric enclosure that is constructed of material allowing for the direct mounting within the primary air stream, as defined by UL-465. The direct mounting shall allow all controls maintenance and troubleshooting to be made while at the unitary equipment. The UDC shall be directly wired to sensory devices, staging relays or modulating valves for heating and cooling.

b). For compatibility to the environment of the unitary equipment, UDC's shall have wide ambient ratings. UDC's shall be rated for service from 32 Deg F (Degrees Fahrenheit) to 140 Deg F.

c). Contractor shall submit description of location of UDC's on all mechanical and unitary equipment.

G. Variable Air Volume Digital Controls (VAVDC)

1. General

Controls shall be microprocessor based Pressure Independent, Variable Air Volume Digital Controllers (VAVDC), as required. The VAVDC shall be based on a minimum 16 bit microprocessor working from software program memory which is physically located in the VAV DDC controller. The VAV controller "intelligence" shall be resident within the same enclosure which translates sensor signals into digital information.

The VAVDC shall consist of a 16 bit microprocessor, power supply, enclosure, actuator (when required), differential pressure transducer, field termination, field adjustments and operation/application system software in a single integrated package. Systems not providing a single integrated package shall provide

documentation supporting the use of the individual components in the application. Documentation shall include life cycle information for the actuator, sensor and control accuracy verification for the combination of the products. All input/output signals shall be directly hardwired to the VAV DDC controller. Troubleshooting of input/output signals shall be easily executed through the HHOT connected at the wall sensor location.

The VAVDC controller shall have a room sensor with integral room set point adjustment. The room sensor/set point shall be capable of being hardwired shared by up to four VAVDC's, providing coordinated control of zones containing multiple VAVDC's. The sharing of the sensor/set point shall be through hardwire connection. Systems sharing room sensor data through communications shall not be acceptable. In cases where a single room sensor is to be shared by multiple controllers and the system cannot accommodate the functions; a wall sensor with multiple sensing elements and a ganged set point adjustment, under a single sensor, shall be employed. The room sensor shall contain a push-button for override of unoccupied conditions and a plug-in communications jack for connection of the HHOT.

VAVDC's shall be provided by the BAS contractor, to the VAV box manufacturer, for factory mounting. The VAV terminal unit supplier shall include, in its price, all costs for mounting of VAVDC controller, connection of actuator to damper shaft, wiring of device power, wiring of VAVDC to fan (fan powered terminal) and wiring to reheat valve actuator as specified on drawings. Termination of re-heat valve actuator shall be done by BAS contractor in the field.

2. VAVDC's shall be in continuous, direct communication with the network which forms the facility wide building automation system, The VAVDC's shall communicate with the SDC at a data baud rate of not less than 9,600 baud.

3. The VAVDC shall be provided with the ability to interface with the HHOT. The interface port shall be provided at the wall sensor or at the controller, as specified on the plans. The interface port shall allow the HHOT to have full functionality.

Through the palm top HHOT, the VAVDC shall support a fully prompted Air Balance sequence. The palm top HHOT shall, when connected to the wall sensor, automatically access the connected VAVDC unit. Systems requiring an address number or an access code to be entered, shall not be acceptable. The air balance sequence shall step the balancing contractor through the checkout and calibration of the VAVDC. Upon completion of the balancing sequence, the flow values presented by the VAVDC shall match those observed by the balancing contractor's measurement equipment. Additionally, upon completion of the air balance, the SDC shall automatically archive the balance settings for future use if the controller were to require replacement. Systems not able to provide a formatted air balance HHOT, shall not be acceptable.

Through this specification requirement, the discrepancies between the readings at the VAVDC/SDC/CHS and the balancing contractors measurement devices, will be eliminated. As a minimum, the balancing program shall step the balancing

contractor through the following functions:

-Check damper linking for full end to end stroke travel
-Verify and set maximum CFM flow valve
-Calibrate maximum CFM flow valve
-Verify and set minimum CFM flow valve
-Calibrate minimum CFM flow valve
-Verify and set reheat flow set point
-Calibrate reheat flow set point
-Verify and set parallel fan start point
-Calibrate parallel fan start point

4. The VAVDC shall provide LED indication of transmit/receive communications performance, as well as for the proper/improper operation of the controller itself.

5. The VAVDC shall be capable of supporting a VAVDC powered, direct plug-in communications repeater allowing for the "T"eeing or "Star"ing of the communications wiring. The plug-in communications repeater shall simplify the network topology by accommodating the various floor plan layouts of the facility.

Systems unable to provide a plug-in communications repeater shall employ standard communications repeaters, mounting these repeaters at the VAVDC where the wiring is to be "T"eed or "Star"ed. The repeaters shall provide quick disconnect terminations for the communications and power wiring, allowing easy troubleshooting and replacement. If the repeater is to be powered from the same source as the VAVDC, the power transformer shall be adequately sized.

6. The VAVDC control algorithms shall be designed to limit the frequency of damper repositioning, to assure a minimum 10 year life from all components of the VAVDC. The VAVDC shall provide zone control accuracy of not more than +/- 1 Degree F. Systems providing control accuracies greater than +/10 degrees F, shall not be acceptable. With the submittal package, contractor shall provide performance data that verifies control accuracy of the VAVDC.

The VAV terminal manufacturer shall provide a multi-point averaging, differential pressure sensor mounted on the inlet to each VAV box. The VAV terminal unit manufacturer shall supply a line to low voltage transformer, of sufficient capacity, to power the VAVDC plus all reheat valves and/or contactors and fan circuits associated with the VAV terminal and actuator assemblies. The BAS contractor shall provide all reheat control valves to the mechanical contractor for mounting and piping. The BAS contractor shall provide and install all wiring between the valve and VAVDC controller and between the room sensor and the VAVDC controller.

7. Non-Volatile Memory

a). All control sequences programmed in the VAV controller shall be stored in non-volatile memory, which is not dependent upon the presence of a battery to be retained. Power failures shall, therefore, not cause the VAV

controller memory to be lost, nor shall there be any need for batteries to be recharged or replaced. The VAVDC shall employ global positioning strategies and actuation response times, sufficient to allow compliance with NFPA-92.

8. Controller Location

a). To simplify controls, mechanical service and troubleshooting, all components of the VAV controller shall be mounted directly at the Variable-Air-Volume terminal box. Enclosure assembly shall be mounted and positioned so that it is easily accessible to operational personnel.

b). The VAVDC shall be powered by a 24 VAC power source and shall comply with Class 2 wiring requirements.

c). For compatibility to the environment of a VAV terminal box, the VAVDC controller shall have wide ambient ratings for specified controls sequences and performance. VAVDC shall be rated for service from 40 Degrees F (Degrees Fahrenheit) to 140 Degrees F.

d). Contractor shall submit description of location of VAVDC controller on VAV terminal box.

e). For compatibility of use, in the supply or return air plenums, the VAVDC enclosure shall be constructed to comply with the requirements of UL-465.

9. Controller Point Capacity

a). Cooling Only Units

The VAVDC controller shall provide input/output points as follows:

i. Self-calibrating Velocity Pressure input (0-2 inch WC). The velocity pressure transducer shall be a continuously self-calibrating unit, which determines the zero velocity pressure point, by equalizing the pressure across the sensing element, every 10-15 seconds.
ii. Room Temperature Input
iii. Occupancy Override Input
iv. VAV Box Damper Output: Unless otherwise specified, the controller shall provide a minimum 30 lb./inch integral electric actuator, having a 90 degree stroke rotation in a time of 3 minutes maximum.
v. Occupancy or Status Input

vi. 0-100 percent Position Indication of Primary Damper Actuator - Direct feedback from damper actuator
vii. Room Set point Input
viii. Auxiliary Temperature Input

- HHOT Interface
- Fan Assisted, Induction, Reheat Units

In addition to the inputs and output points described above, VAVDC controllers which are fan assisted, induction or reheat configurations shall provide the following additional control points:

ix. A minimum of 4, Form A, digital outputs for fan control, floating valve actuator control. Contact outputs shall be capable of accommodating 120 VAC pilot duty loads. Systems unable to accommodate the 120 VAC requirement shall provide interface relays for all controlled loads.

x. A 4-20mA (2-10 VDC, 1-5 VDC) proportional analog output signal for control of a proportioning hydronic reheat valve.

xi. VAV Terminals with Actuator by VAV Terminal Manufacturer

In place of the internal actuator specified in item above and in addition to the inputs and outputs specified in above, the VAVDC controller shall provide one of the two outputs below:

xii. Two additional, solid state electronic triacs to drive VAV terminal manufacturers 24 volt, synchronous, floating motor actuators.

xiii. A 4-20mA dc output for interface to VAV terminals with analog actuators.

For externally actuated controllers, the controller shall provide the commanded output position as a feedback signal.

2.10. SYSTEM SOFTWARE DESCRIPTION

A. General

1. Contractor shall provide all software for a complete and operational system as described herein. Software shall include manufacturer's standard multi-tasking, multi-user operating system for operator consoles and controllers, network communication software for dial-up and hard trunk applications, operator man-machine interface software, control application software and all other software necessary to provide the functions specified herein.

2. System software shall be as manufactured by Siemens.

2.11. EXCEPTION REPORTING SEQUENCES

A. Alarm/COS Reports

1. For those digital points indicated on the drawings, the Contractor shall provide a unique change-of-state alarm message of up to 70 characters. The message shall report to all devices assigned to the alarm class.

2. For those points indicated on the drawings which are designated as interrupt priority, the Contractor shall provide an interrupting process display at the CHS location which displays the current conditions for the operator.

In addition, the CHS computer shall automatically send a picture of the process graphic display to the remote locations specified on the drawings as receiving facsimile copies of interrupting alarms.

3. For those points designated in paragraph 3 above, the FMCS shall also send a history log to the system report printer of the immediate prior history of the points causing the interrupt priority. This log shall contain 1 minutes samples of the previous 15 minutes of operation.

4. For those points on the drawings designed as Hard Facts points, the Contractor shall provide an alarm message to a remote facsimile location designated by the Owner. The FMCS system shall provide at the remote location, a facsimile printout showing location, time/date of alarm and alarm message of the point. For interrupt priority fax alarms, the remote facsimile machine shall receive a hard copy of the interrupt process screen showing on-line dynamic data values of the current conditions.

B. Off Hours Exception Reporting

The Owner shall specify up to five sites to which off hours exceptions shall be auto-dialed and reported. This shall allow the owner to assign off hours exception responses to various facility personnel as necessary. Selection of the site to be dialed can be programmed by the Owner, and set to change automatically per time of day and day of week.

2.12. MONITORING SYSTEM, SENSORS AND WIRING

A. Sensors and other Devices for Input/Output Summary Schedule:

1. Provide all necessary sensors, relays, panels, conduits and wire for the points indicated in the input/output summary as shown on the contract drawings.

2. Analog sensing elements for remote indication shall be independent of local sensors used for local control loops.

3. Temperature sensors shall be Resistance Temperature Detector (RTD) type of 1000 ohm balco. Space (60-90 degrees F); Duct/Well (-30-250 degrees F); Averaging Duct (-30-225 degrees F) or as required under Division 26.

a). Space temperature sensors shall be provided with blank commercial type locking satin chrome covers.

b). Duct temperature sensors shall be rigid stem or averaging type as specified in the sequence of operation. Water sensors shall be provided with a separable copper, monel or stainless steel well. Outside air wall mounted sensors shall be provided with a sun shield.

4. Differential and Static Pressure Sensors and Switches

a). Fan proof-of-flow switches shall be U.L. listed adjustable set point and differential pressure type. Switches shall be piped to fan discharge except where fans operate at less than one inch WG, they shall be piped across the fan. For fractional horsepower and non-ducted fans, relays or auxiliary contacts may be used. Maximum pressure rating shall be at

least 10 inches WG. with .05-12 inch W.C. range.

b). Pump proof-of-flow switches shall be U.L. listed adjustable differential pressure or flow type as specified in the sequence of operation or data point summary. Devices shall be 150 psi rated except chilled water flow switches shall be provided with totally sealed vapor tight switch enclosure on 300 psi body. Differential pressure switches shall have valved manifold for servicing, and a range of 3 psi-150 psi.

c). Air flow and static pressure analog sensors shall be high accuracy suitable for the low velocity pressures to be encountered, be selected for approximately 50 percent overrange, and have a 4 to 20 ma output. These differential pressure sensors shall be connected to the air flow measuring station with valved lines for testing and calibration, and shall have adjustments for zero and span. 5 inch W.C. range.

d). Water flow analog sensors shall be provided complete with flow element and shall be an all solid state precision industrial type with stainless steel meter body, maximum error of no more than .5 percent or span, and 4 to 20 ma output. Sensor shall be rated for 250 psi minimum and installed in strict accordance to the manufacturer's instructions complete with three-valve manifold for calibration and maintenance.

5. Overall system accuracy, including electronic analog sensing elements, shall be as follows:

a). Air: Plus or minus 1.0 degrees F temperature, plus or minus 2.5 percent r.h., plus or minus 2.0 percent static pressure.

b). Water: Plus or minus 0.7 degrees F over full scale range for water points, plus or minus 1.0 degree F for others.

c). Proof of fan or pumps operating status, or alarm conditions shall be through positive feedback from differential pressure switches across fan or pump. Auxiliary dry contacts may be used for proof of fans or pumps if the motors are fractional H.P., and other non-ducted fans.

6. Digital inputs from devices with isolated, dry type contacts (no grounds, no voltage) of either normally open (N.O.) or normally closed (N.C.) configuration shall be provided. Live contact inputs, those that have voltage present, shall be provided with isolating devices to meet dry contact requirements.

7. Start-stop relay module shall contain relays for start-stop function at the remote

point, with relays mounted and factory wired to numbered terminal strips.

8. Outage Devices:

a). Control Relays: Control relay contacts shall be rated for the application, with a minimum of two sets of Form C contacts, enclosed in a dustproof enclosure. Relays shall have silver-cadmium contacts with a minimum life span rating of one million operations. Operating time shall be 20 milliseconds or less, with release time of 10 milliseconds or less. Relays shall be equipped with coil transient suppression limiting transients to nondamaging levels.

b). Time Delay Relays: Time delay relay contacts shall be rated for the application with a minimum of two sets of Form C contacts enclosed in a dustproof enclosure. Relays shall have silver-cadmium contacts with a minimum life span rating of one million operations. Relays shall be equipped with coil transient suppression devices to limit transients to nondamaging levels. Delays contact opening or closing shall be adjustable from one to 60 seconds with a minimum accuracy of plus or minus 2 percent of setting.

c). Latching Relays: Latching relay contacts shall be rated for the application with a minimum of two sets of Form C contacts enclosed in a dustproof enclosure. Relays shall have silver-cadmium contacts with a minimum life span rating of one million operations. Operating time shall be 20 milliseconds or less, with release time of 10 milliseconds or less. Relays shall be equipped with coil transient suppression devices to limit transients to nondamaging levels.

d). Reed Relays: Reed relays shall be encapsulated in a glass-type container housed in a plastic or epoxy case. Contacts shall be rated for the application. Operating and release times shall be one millisecond or less. Reed relays shall have a minimum life span rating of 10 million operations.

e). Contactors: Contactors shall be of the single-coil, electrically operated, mechanically held type. Positive locking shall be obtained without the use of hooks, latches, or semi-permanent magnets. Contacts shall be double-break silver-to-silver type protected by arcing contacts. Number of contacts and ratings shall be selected for the application. Operating and release times shall be 100 milliseconds or less. Contactors shall be equipped with coil transient suppression devices to limit transients to nondamaging levels.

f). Solid-State Relays: Input-output isolation shall be greater than 1000 megohms with a breakdown voltage of 1500 V rms or greater at 60 Hz. The contact life shall be 10 million operations or greater. The ambient temperature range shall be minus 20 degrees to plus 140 degrees F. Input impedance shall not be less than 500 ohms. Relays shall be rated for the application. Operating and release times shall be one millisecond or less. Transient suppression shall be provided as an integral part of the

relay to limit transients to nondamaging levels.

9. Audible Alarm:

a). All alarms shall annunciate on the ATC system front end computer and via pagers.

PART 3. EXECUTION

3.1. GENERAL

A. The Automatic Temperature Control System and Central Control and Management System, shall be designed, installed, and commissioned in a turnkey fully implemented and operational manner.

3.2. BMS SPECIFIC REQUIREMENTS

A. Graphic Displays

1. Provide a color graphic system flow diagram display for each new and existing system with all points as indicated on the point list. All terminal unit graphic displays shall be from a standard design library.

2. User shall access the various system schematics via a graphical penetration scheme and/or menu selection.

B. Custom Reports:

1. Provide custom reports as required for this project:

3.3. INSTALLATION & SUPERVISION

A. All wiring and tubing shall be properly supported and run in a neat and workmanlike manner. All wiring and tubing exposed and in equipment rooms shall run parallel to or at right angles to the building structure. All piping and wiring within enclosures shall be neatly bundled and anchored to prevent restriction to devices and terminals.

B. The control contractor shall be responsible for all electrical installation required for a fully functional control and automation system and not shown on the electrical plans or required by the electrical specifications. All wiring shall be in accordance to all local and national codes.

1. All line voltage wiring, all wiring exposed, and all wiring in equipment rooms shall be installed in conduit in accordance to the electrical specifications.

2. All electric and electronic wiring shall be minimum THHN and shielded if required.

3. All wiring in the central control room shall be concealed in an approved manner.

C. Verify locations of temperature sensors, and other exposed control sensors with plans and Owner prior to installation.

D. The installation and supervision of this project shall be carried out by factory trained personnel who are employed by the Contractor and licensed for this type of work.

E. Install control units and other hardware in position on permanent walls where not subject to excessive vibration.

F. Install software in control units and in operator work station. Implement all features of programs to specified requirements and appropriate to sequence of operation.

G. Install in accordance with manufacturer's instructions.

H. Check and verify location of space temperature sensors, and other exposed control sensors with plans and room details before installation. Align with lighting switches and humidistats.

I. Provide separable sockets for liquids and flanges for air bulb elements.

J. Mount control panels adjacent to associated equipment on vibration free walls or free standing angle iron supports. One cabinet may accommodate more than one system in same equipment room. Provide engraved plastic nameplates for instruments and controls inside cabinet and engraved plastic nameplates on cabinet face.

K. Install equipment plumb and level.

L. Install all equipment to be accessible for service and maintenance.

3.4. ACCEPTANCE TESTING

A. Point Verification

To verify end-to-end operation of the system the Contractor shall provide a hard copy of an All Points Summary Listing to the Owner of each part or system to be placed in warranty by the Contractor. For CHS systems, the Contractor shall additionally provide a print screen of the process display showing real time dynamic point information for all points on the subsystem(s) to be accepted.

B. Sequence Verification

1. The Contractor shall notify the Owner's representative of systems which perform all specified sequences.

2. The warranty acceptance test shall be of 5 days duration and the system shall perform as follows:

a). During the five days, the FMCS system shall not report any system diagnostics from the subsystem under test.

b). The subsystem shall be performance verified as operational using

temporary trends of each control loop located in the SDC or MSDC.

During the occupied periods, BAS control loops, under test, shall maintain control of the process variable within the following scales:

Duct Static Pressure	+/-0.3 inch WC
Duct Temperature Loops	+/-2 degrees F
Room Temperature Loops	+/-1degrees F
Pipe Temperature Loops	+/-2 degrees F

The contractor shall provide a hard copy printout of the process variable, process variable set point and control loop output percent for the period of 2 hours prior to occupancy to 2 hours after occupancy with samples taken every 15 minutes.

3.5. VARIABLE AIR VOLUME AIR BALANCING

A. The air balance of the system shall be conducted by an independent AABC certified test and balance contractor.

B. The test and balance contractor shall verify that duct static pressure and scheduled VAV box flows +/-5 percent are present at each VAV terminal and supply air system. The air balance contractor shall make such adjustments as necessary to verify air flows meet design requirements.

C. The BAS contractor shall provide the test and balance subcontractor via loan, palm top HHOT with an air balance test program. The HHOT shall plug into each wall sensor location and provide the air balancer a prompted display to properly set the minimum and maximum flow of each VAV terminal.

3.6. COORDINATE WITH TAB AGENCY

A. Verify that all control components are installed in accordance with project requirements and are functional, including all electrical interlocks, damper sequences, air and water reset, freeze stats and duct smoke detectors.

B. Verify that all controlling instruments are calibrated and set for design operating conditions prior to commencement of TAB work.

C. Calibrate sensors after installation, and before the sensor control verification tests are performed. Prove the accuracy of final settings by taking temperature readings. The readings shall be in a typical conditional space for each separately controlled zone.

D. Allow sufficient time in the project to provide assistance and instruction to the balancing agency in the proper use and setting of control components such as, but not limited to, computers, static pressure controllers, or any other device that may need set points changed so that the testing and balancing work can be performed.

E. Assist the balancing agency in the testing of VAV boxes. Make available to the balancing agency the use of a portable service terminal for use in balancing VAV boxes.

F. All control sequences, software, equipment, and components shall be started-up by a qualified technician. Start-up report shall be submitted to Engineer prior to the commencement of testing and balancing work. Testing and balancing shall not commence until start-up reports are completed, reviewed by Engineer and forwarded to Testing and Balancing Agency.

3.7. EXAMINATION

A. Verify existing conditions before starting work.

B. Verify that systems are ready to receive work.

C. Beginning of installation means installer accepts existing conditions.

D. Sequence work to ensure installation of components is complementary to installation of similar components in other systems.

E. Coordinate installation of system components with installation of mechanical systems equipment such as air handling units and air terminal units.

F. Verify that conditioned power supply is available to the control units and to the operator work station. Verify that field end devices, wiring, and tubing is installed prior to installation proceeding.

3.8. INTERLOCK REQUIREMENTS

A. The fan and equipment interlock requirements are as scheduled on the contract drawings.

B. Furnish and install all necessary relays, transformer, contactors, wiring, conduit, and accessories to perform fan, equipment, and damper interlocks.

C. Unless otherwise noted, fan interlocks shall be arranged such that dampers associated with fan shall be open when fan starts and close when fan stops.

3.9. SUBMITTALS AT PROJECT CLOSEOUT

A. Project Record Documents: Record actual locations of components and set points of controls, including changes to sequences made after submission of shop drawings.

3.10. CONNECTIONS

A. Piping installation requirements are specified in other Division 23 Sections. Drawings indicate general arrangement of piping, fittings, and specialties.

1. Install piping adjacent to machine to allow service and maintenance.

B. Ground equipment.

1. Tighten electrical connectors and terminals according to manufacturer's published torque-tightening values. If manufacturer's torque values are not indicated, use those specified in UL 486A and UL 486B.

C. Connect hand-off-auto selection switches to override automatic interlock controls when switch is in hand position.

3.11. FIELD QUALITY CONTROL

A. Manufacturer's Field Service: Engage a factory-authorized service representative to inspect, test, and adjust field-assembled components and equipment installation, including connections, and to assist in field testing. Report results in writing.

B. Perform the following field tests and inspections and prepare test reports:

1. Operational Test: After electrical circuitry has been energized, start units to confirm proper unit operation. Remove and replace malfunctioning units and retest.

2. Test and adjust controls and safeties.

3. Test calibration of electronic controllers by disconnecting input sensors and stimulating operation with compatible signal generator.

4. Test each point through its full operating range to verify that safety and operating control set points are as required.

5. Test each control loop to verify stable mode of operation and compliance with sequence of operation. Adjust PID actions.

6. Test each system for compliance with sequence of operation.

7. Test software and hardware interlocks.

C. DDC Verification:

1. Verify that instruments are installed before calibration, testing, and loop or leak checks.

2. Check instruments for proper location and accessibility.

3. Check instrument installation for direction of flow, elevation, orientation, insertion depth, and other applicable considerations.

4. Check flow instruments. Inspect tag number and line and bore size, and verify that inlet side is identified and that meters are installed correctly.

5. Check pressure instruments, piping slope, installation of valve manifold, and self-contained pressure regulators.

6. Check temperature instruments and material and length of sensing elements.

7. Check control valves. Verify that they are in correct direction.

8. Check DDC system as follows:

   a). Verify that DDC controller power supply is from emergency power supply, if applicable.
   b). Verify that wires at control panels are tagged with their service designation and approved tagging system.
   c). Verify that spare I/O capacity has been provided.
   d). Verify that DDC controllers are protected from power supply surges.

D. Replace damaged or malfunctioning controls and equipment and repeat testing procedures.

E. All temperature control and interlock wiring shall be installed in conduit unless otherwise noted on the plans. Power or interlock wiring shall be run in separate conduit from sensor and communications wiring.

3.12. ADJUSTING

A. Calibrating and Adjusting:

1. Calibrate instruments.

2. Make three-point calibration test for both linearity and accuracy for each analog instrument.

3. Calibrate equipment and procedures using manufacturer's written recommendations and instruction manuals. Use test equipment with accuracy at least double that of instrument being calibrated.

4. Control System Inputs and Outputs:

   a). Check analog inputs at 0, 50, and 100 percent of span.
   b). Check analog outputs using VOM meter at 0, 50, and 100 percent output.
   c). Check digital inputs using jumper wire.
   d). Check digital outputs using ohmmeter to test for contact making or breaking.
   e). Check resistance temperature inputs at 0, 50, and 100 percent of span using a precision-resistant source.

5. Flow:

   a). Set differential pressure flow transmitters with 3-point calibration accomplished at 0, 50, and 100 percent of span.
   b). Manually operate flow switches to verify that they make or break contact.

6. Pressure:

   a). Calibrate pressure transmitters at 0, 50, and 100 percent of span.
   b). Calibrate pressure switches to make or break contacts, with adjustable differential set at minimum.

7. Temperature:

   a). Calibrate resistance temperature transmitters at 0, 50, and 100 percent of span using a precision-resistance source.
   b). Calibrate temperature switches to make or break contacts.

8. Stroke and adjust control valves and dampers.

9. Provide diagnostic and test instruments for calibration and adjustment of system.

10. Provide written description of procedures and equipment for calibrating each type of instrument. Submit procedures review and approval before initiating startup procedures.

B. Adjust initial temperature and humidity set points.

C. Occupancy Adjustments: When requested within 12 months of date of Substantial Completion, provide on-site assistance in adjusting system to suit actual occupied conditions. Provide up to three visits to Project during other than normal occupancy hours for this purpose.

3.13. ON-SITE ASSISTANCE

A. Occupancy Adjustments: Within one year of date of Substantial Completion, provide up to three Project site visits, when requested by Owner, to adjust and calibrate components and to assist Owner's personnel in making program changes and in adjusting sensors and controls to suit actual conditions.

3.14. SCHEDULING

A. Submit spreadsheet to Owner indicating occupied/unoccupied times for each item controlled by ATC system. Incorporate all scheduling requirements into sequence of operation.

3.15. STAGING

A. Coordinate staging requirements with equipment being controlled. Where multistage units are scheduled or specified, provide all devices, controllers, wiring to control and sequence all stages.

3.16. SEQUENCES OF OPERATION

A. Refer to Contract Drawings for sequences of operation, control diagrams, and points list.

END OF SECTION

DIVISION 23 SECTION 233000
HVAC AIR DISTRIBUTION

TABLE OF CONTENTS

PART 1. GENERAL

1.1. SUMMARY
1.2. REFERENCES
1.3. PERFORMANCE REQUIREMENTS
1.4. QUALIFICATIONS
1.5. REGULATORY REQUIREMENTS
1.6. ENVIRONMENTAL REQUIREMENTS
1.7. ALTERNATES

PART 2. PRODUCTS

2.1. DUCTWORK
2.2. DUCT SYSTEMS
2.3. DUCT CONSTRUCTION
2.4. AIR VOLUME CONTROLS
2.5. INSTRUMENT TEST PORTS
2.6. FIRE DAMPERS
2.7. DUCT ACCESS DOORS
2.8. SPIN-IN FITTINGS
2.9. DUCT LINING (LOW PRESSURE DUCTWORK)
2.10. DUCT LINING (MEDIUM PRESSURE DUCTWORK)
2.11. AIR TERMINAL DEVICES
2.12. OPEN END DUCTS (OED)
2.13. DRIP PANS
2.14. DUCT SEALANTS AND ADHESIVES

PART 3. EXECUTION

3.1. DUCT INSTALLATION REQUIREMENTS
3.2. ACCESSORY INSTALLATION REQUIREMENTS
3.3. DUCT LINING INSTALLATION REQUIREMENTS
3.4. CLEANING
3.5. LEAKAGE TESTS
3.6. DUCTWORK IDENTIFICATION

SECTION 233000 - HVAC AIR DISTRIBUTION

PART 1 GENERAL

1.1 SUMMARY

A. For General Mechanical Requirements, see Division 23 Section, “Common Work Results for HVAC” and Division 01, “General Requirements”.

B. The fabrication and installation of all ductwork, together with related equipment, shall comply with the standards of the National Fire Protection Association, as set forth in NFPA Standard No. 90A, as well as with the requirements of the Sheet Metal and Air Conditioning Contractors' National Association, Inc., and the latest edition of the ASHRAE Guide.

C. All duct sizes shown are net inside clear dimensions. Where internal duct lining is used, increase duct sizes accordingly to provide the indicated net free area. Unless otherwise indicated size runouts, drops, and connections to grilles, registers, diffusers, fans, coils, louvers, filters, and other equipment to the full size of the equipment connection.

D. Minor changes may be made in duct sizes where required to fit the available space, provided the indicated net free area and approximate aspect ratio are maintained.

E. Smoothly transition all ductwork to prevent excessive or unnecessary turbulence or pressure loss.

F. All exposed ductwork in finished areas shall be painted in color as indicated by Owner. All ductwork requiring paint shall be constructed of paint grade galvanized sheet steel with a paintable finish.

1.2 REFERENCES

A. ASTM A 36 - Structural Steel.

B. ASTM A 90 - Weight of coating on Zinc-Coated (Galvanized) Iron or Steel Articles.

C. ASTM A 167 - Stainless and Heat-Resisting Chromium-Nickel Steel Plate, Sheet, and Strip.

D. ASTM C 916 Type II – Standard Specification for Adhesives for Duct Thermal Insulation.

E. ASTM A 366 - Steel, Sheet, Carbon, Cold Rolled, Commercial Quality.

F. ASTM A 480 - General Requirements for Flat-Rolled Stainless and Heat-Resisting Steel Plate, Sheet, and Strip.

G. ASTM A 525 - General Requirements for Steel Sheet, Zinc-Coated (Galvanized) by the Hot-Dip Process.

H. ASTM A 527 - Steel Sheet, Zinc-Coated (Galvanized) by Hot-Dip Process, Lock

Forming Quality.

I. ASTM A 568 - Steel, Sheet, Carbon, and High-Strength, Low-Alloy, Hot-Rolled and Cold-Rolled.

J. ASTM A 569 - Steel, Carbon (0.15 Maximum, Percent), Hot-Rolled Sheet and Strip, Commercial Quality.

K. AWS D9.1 - Welding of Sheet Metal.

L. NBS PS 15 - Voluntary Product Standard for Custom Contact-Molded Reinforced-Polyester Chemical Resistant Process Equipment.

M. NFPA 90A - Installation of Air Conditioning and Ventilating Systems.

N. NFPA 90B - Installation of Warm Air Heating and Air Conditioning Systems.

O. NFPA 91 - Installation of Blower and Exhaust Systems for Dust, Stock and Vapor Removal or Conveying.

P. SMACNA - HVAC Air Duct Leakage Test Manual.

Q. UL 181 - Factory-Made Air Ducts and Connectors.

R. NFPA 90A - Installation of Air Conditioning and Ventilating Systems.

S. NFPA 70 - National Electrical Code.

T. SMACNA - HVAC Duct Construction Standards - Metal and Flexible.

1.3 PERFORMANCE REQUIREMENTS

A. No variation of duct configuration or sizes permitted except by written permission. Size round ducts installed in place of rectangular ducts in accordance with ASHRAE Table of Equivalent Rectangular and Round Ducts.

1.4 QUALIFICATIONS

A. Manufacturer: Company specializing in manufacturing the projects specified in this section with minimum five (5) years documented experience.

B. Installer: Company specializing in performing the work of this section with minimum five (5) years' experience.

1.5 REGULATORY REQUIREMENTS

A. Construct ductwork to NFPA- 90A, and NFPA-90B.

1.6 ENVIRONMENTAL REQUIREMENTS

A. Do not install duct sealants when temperatures are less than those recommended by

sealant manufacturer.

B. Maintain temperatures during and after installation of duct sealants.

1.7 ALTERNATES

A. Refer to Division 01 Section, "Alternates" for description of work under this section affected by alternates.

PART 2 PRODUCTS

2.1 DUCTWORK

A. Unless otherwise indicated or specified, fabricate ductwork of galvanized sheet steel, stainless steel, or aluminum conforming to Commercial Designation 3003 Temper H14 and Duct Sheet. Duct gages, jointing and reinforcement shall conform to Tables 4, 5, 6 and 7, as applicable, Chapter I of the latest *ASHRAE Guide and Data Book*. Construction details shall conform to Section I and Section II, as applicable, of *Duct Manual and Sheet Metal Construction for Ventilation and Air Conditioning Systems* as published by Sheet Metal and Air Conditioning Contractors' Association, Inc.

B. Erect sheet metal ductwork in a first-class, workmanlike manner secured in place rigidly and permanently. Provide suitable hangers, securely attached to building construction with bolts, clips or inserts. Hangers shall be structural shapes, flat bars, or formed strap hangers; use of wire will not be permitted. Hangers shall not pass through or be inside duct. Support vertical ducts passing through floors by angles riveted to duct and resting either on floor or on brackets secured to building construction. All space around ducts where they pass through any walls, floors, ceilings, or roofs shall be sealed tight with incombustible inert material. Do not arrange ducts so as to impair the effectiveness of fireproofing around structural members. Provide sheet metal flanged collars around exposed ducts passing through walls, floors, or ceilings to provide finished appearance. Seal all duct joints and seams including supply, return, outside air, combustion air, relief air, ventilation air and exhaust ductwork with *Hardcast* Sealing System as manufactured by Hardcast, Inc., Foster, Childers, or approved equal.

C. Flexible connections of neoprene or other NFPA approved non-inflammable fabric shall be provided in the duct system at all fan inlet and outlet connections.

D. Provide cut turning vanes in all duct turns where centerline radius is located. Turning vanes shall be air-foil type with extended trailing edges. Fabricate to comply with SMACNA Sheet Metal Construction for Ventilation and Air Conditioning Systems Manual.

E. Provide duct collars and angle iron framework for mounting of automatic dampers.

F. Fabricate and support in accordance with SMACNA HVAC Duct Construction Standards - Metal and Flexible, and as indicated. Provide duct material, gauges, reinforcing, and sealing for operating pressures indicated.

G. Construct T's, bends, and elbows with radius of not less than 1-1/2 times width of duct on centerline. Where not possible and where rectangular elbows are used, provide air foil

turning vanes. Where acoustical lining is indicated, provide turning vanes of perforated metal with glass fiber insulation.

H. Increase duct sizes gradually, not exceeding 15 degrees divergence wherever possible; maximum 30 degrees divergence upstream of equipment and 45 degrees convergence downstream.

I. Fabricate continuously welded round and oval duct fittings two gauges heavier than duct gauges indicated in SMACNA Standard. Joints shall be minimum 4-inch (100 mm) cemented slip joint, brazed or electric welded. Prime coat welded joints.

J. Provide standard 45 degree lateral wye takeoffs unless otherwise indicated where 90 degree conical tee connections may be used.

K. Fasteners: Rivets, bolts, or sheet metal screws.

L. Hanger Rods: ASTM A36 - Galvanized steel; threaded both ends, threaded one end, or continuously threaded.

2.2 DUCT SYSTEMS

A. Supply duct systems from air handling units to variable air volume boxes shall be constructed for medium pressure service (6 inch W.G.) and ductwork from the variable air volume box to diffusers shall be constructed for low pressure service (2 inch W.G.). All other supply, return, exhaust, fresh air intake, relief, ventilation, outside air ductwork shall be constructed for low pressure service (2 inch W.G.). All exposed round ductwork in finished areas shall be paintable grade, dual wall, constructed for medium pressure service (6 inch W.G.). All fume exhaust ductwork shall be constructed for medium pressure service (6 inch w.g.)

2.3 DUCT CONSTRUCTION

A. Rectangular and/or Round Ductwork (Low Pressure):

1. Galvanized Steel Ducts: ASTM A525 and ASTM A527 galvanized steel sheet, lock-forming quality, having G-90 Zinc coating in conformance with ASTM A90.

2. <u>Make allowance for internal duct lining where required. Sizes shown on the drawings are inside clear dimensions.</u>

3. Determine duct gauges for the longest duct side and use for all four sides. Joints and reinforcing requirements apply to the longest duct side.

4. Reinforce all ducts to prevent buckling, vibration, or noise as recommended in the referenced construction standards, and as required to suit the installed conditions.

5. Do not cross break duct which will receive rigid insulation covering.

6. Where tap sizes of divided-flow fittings are not indicated, make branch and

main/connection sizes proportional to their respective air flows and maintain uniform transverse velocities in the fitting.

7. Make radius elbows and radius tee connection with throat radius equal to or greater than the width of the duct. Use vaned elbows where shown and where radius elbows will not fit the space, and in all square bends.

8. Turning vanes shall be the air-foil type with extended trailing edges, 36-inch maximum vane length. Where longer vanes are required, use two or more sets of vanes with intermediate runners securely fastened together.

9. Bolt, screw, rivet, or spot weld reinforcing members securely to the duct on not less than 6-inch centers.

10. Where ducts are open-ended without grilles, registers, or other means of stiffening, reinforce and stiffen the open end with standing seams or an angle frame. Provide rolled edges to prevent any exposed sharp edges.

11. Where ductwork is not painted or otherwise finished, remove all exposed traces of joint sealers, manufacturer's identification and other markings.

12. Where aluminum ductwork is used, make allowance for increased thermal expansion. Particularly avoid direct contact between aluminum and concrete or masonry walls subject to dampness.

13. Determine duct gauges per SMACNA based on duct size and pressure indicated.

B. Fume Hood Exhaust Air Ductwork Round and/or Rectangular Ductwork (Stainless Steel Type 316):

1. Stainless steel ducts: ASTM A167, Type 316. All fume hood exhaust ductwork shall be welded stainless steel.

2. All stainless steel ducts shall be round longitudinal seam or rectangular stainless steel Type 316. Determine duct gauges suitable for duct diameter and welded joints.

3. All longitudinal seams shall be installed with seam up.

4. These exhaust systems are low pressure service.

5. All elbows are round. Ninety degree squared elbows are not permitted.

6. All joints are welded by gas fusion using rods of similar materials.

7. All dampers, manual and motorized, shall be stainless steel Type 304.

8. These exhaust systems shall be fabricated and installed in strict accordance with requirements of SMACNA and NFPA.

9. All exterior exhaust ductwork shall be Type 316 stainless steel. Exterior

rectangular exhaust ductwork shall be beveled and crossbroken for proper drainage.

C. Round Ductwork (Dual Wall - Medium Pressure)

1. Medium pressure flat oval and round ductwork shall be spiral lock-seam Type K-27 with Type P liner as manufactured by United Sheet Metal Company, Inc., Semco Manufacturing, Inc., Lindab, Ductmate, or approved equal, Uniseal duct and Uniform fittings. Construct ductwork of galvanized sheet steel. Elbows 8 inches in diameter and smaller shall be smooth formed. Larger elbows shall be five section type. Tees and crosses and laterals shall be conical. Make joints with sleeve type couplings, short length sheet metal screws and duct sealant. Seal joints with Hardcast, Foster, Childers, or approved equal, as hereinbefore specified. Conform to duct manufacturer's recommendations for jointing and installation. Ductwork and fittings shall be manufactured by a company regularly engaged in the construction of spiral ductwork and fittings. Contractor-fabricated ductwork <u>will not</u> be acceptable for ductwork and fittings. Manufacturers substituted for the above specified manufacturers shall submit for approval independently published laboratory test data on all proposed ductwork and fittings showing materials of construction, air flow, pressure drop and acoustical performance characteristics.

2. Round dual wall ductwork shall be installed to the extent shown on the drawings. All duct lining shall be provided with a perforated galvanized liner on the surface exposed to the air stream. All exposed ductwork in finished areas and where indicated on contract drawings shall be painted in color as selected by Architect. All ductwork requiring paint shall be constructed of paint grade sheet steel with paintable finish.

3. Round dual wall ductwork shall contain a 1 ½ inch thick fiberglass insulation sandwiched between inner and outer ducts.

D. Round/Flat Oval and/or Rectangular Ductwork (Single Wall Medium Pressure):

1. Galvanized Steel Ducts: ASTM A525 and ASTM A527 galvanized medium pressure sheet steel, lock forming quality, having G90 Zinc coating in conformance with ASTM A90.

2. Determine duct gauges based on duct diameter or duct size and pressures indicated.

3. Round and flat oval duct shall be spiral seam type.

4. All branch ducts shall connect to the main duct with a 45 degree conical lateral, or low loss fittings as shown on the drawings where possible. Where not possible, a 90 degree conical connection shall be used.

5. All elbows shall be long radius.

6. All seams and joints of fittings shall be welded by gas fusion with rod material same as duct material.

7. Connections to equipment shall be flexible material, NEMA approved, having adequate reinforcing to be compatible with internal pressure of system.

8. Paint all cut ends and welded joints with aluminum paint.

9. Make allowance for internal duct lining where required. Sizes shown on the drawings are inside clear dimensions. Rectangular lined ductwork shall have perforated metal liner, similar to that hereinafter specified.

10. Determine duct gauges for the longest duct side and use for all four sides. Joints and reinforcing requirements apply to the longest duct side.

11. Reinforce all ducts to prevent buckling, vibration, or noise as recommended in the referenced construction standards and as required to suit the installed conditions.

12. Do not cross-break duct which will receive rigid insulation covering.

13. Where tap sizes of divided-flow fittings are not indicated, make branch and main connection sizes proportional to their respective air flows and maintain uniform transverse velocities in the fitting.

14. Make radius elbows and radius tee connection with throat radius equal to or greater than the width of the duct. Use vaned elbows where shown and where radius elbows will not fit the space, and in all square bends.

15. Turning vanes shall be the airfoil type with extended trailing edges, 36-inch maximum vane length. Where longer vanes are required, use two or more sets of vanes with intermediate runners securely fastened together.

16. Bolt, screw, rivet, or spotweld reinforcing members securely to the duct on not less than 6-inch centers.

17. Where ducts are open-ended without grilles, registers, or other means of stiffening, reinforce and stiffen, and open end with standing seams or an angle frame.

18. Remove all exposed traces of joint sealers, manufacturer's identification and other markings.

2.4 AIR VOLUME CONTROLS

A. Furnish and install air volume control devices where indicated and where required to adjust and balance air flow in the systems, whether indicated or not. Volume dampers shall be provided in all branch ducts serving air outlets and inlets.

B. Air extraction for air outlets and branch ducts shall be the gang-operated vane type, Tuttle & Bailey - *Vectrol,* Type VLC or VLK as appropriate, or approved equal, with suitable adjusting device and means of access.

C. Manual volume dampers in ductwork shall be factory-assembled units with rigid frame, opposed-blade action, and locking quadrant operator. Mark the extended damper shaft and align the operating handle to indicate the blade position. Dampers shall be as manufactured by Ruskin, American Warming and Ventilating, Inc., Arrow, or approved equal. Rectangular dampers shall be Type MD35, with steel channel frame, 16 gauge steel blades, 9 inch maximum blade spacing, low pressure, nylon bearings, galvanized finish with aluminum paint touch up. Round manual balancing dampers shall be Type MDRS25 manufactured by Ruskin, Arrow, American Warming and Ventilating, Inc., or as approved equal. When external insulation is to be applied, provide sheet metal standoffs on all manual volume dampers.

D. Motor-operated dampers shall be as hereinafter specified under Division 23 Section, “Instrumentation and Controls of HVAC & Plumbing System”.

E. Duct turning vanes shall be Tuttle & Bailey *Ducturns*, or approved equal.

F. Furnish and install duct collars and angle iron frames for the installation of ATC dampers.

G. Provide Type 316 stainless steel motor-operated dampers for installation in stainless steel ductwork.

H. Where volume dampers are installed in exposed finished spaces locate damper handle on top of duct.

I. Where volume dampers are installed above ceilings attach a colored piece of tape so that Test and Balance Engineer can easily locate for air flow adjustment.

2.5 INSTRUMENT TEST PORTS

A. Furnish and install instrument test ports in the ductwork to allow use of pitot tube length. Equip holes with Ventlok #699 instrument ports. Fittings shall extend beyond duct covering and insulation.

2.6 FIRE DAMPERS

A. Furnish and install automatic fire dampers where indicated, in all 2-hour fire-rated partitions, shafts, slabs, etc., and where required by NFPA Standard No. 90A and by the Fire Marshal. Refer to the architectural drawings for location of all fire-rated walls, shafts and slabs. Fire Dampers shall also be provided at all transfer air devices installed in rated walls at all floor penetrations, and as shown on the contract drawings.

B. Construction of fire dampers shall conform to requirements of NFPA No. 90A, UL Standard 555 and shall bear UL label. Fire dampers shall be set in frames adequately secured to fire partitions, floors, etc., and installed in strict accordance with UL listing and manufacturer's instructions.

C. Fire damper shall be Dynamic Type for rectangular ductwork and round ductwork as manufactured by Ruskin, Air Balance, Inc., Arrow, Greenheck, Lloyd Industries, Nailor, or approved equal, multi-leaf accordion type, held open by adequate heavy gauge wires and suitably calibrated fusible links. Vertical dampers (horizontal air flow) shall close by

gravity. Horizontal dampers (vertical air flow) shall be closed by suitable and positive spring closing devices.

D. Damper frames shall provide pocket which shall store the damper leaves in open position outside of the air stream and shall provide for 100 percent opening connecting to ductwork or grille face. Damper material shall match connecting ductwork.

E. Provide adequately sized hinged access doors with cam locks for access to all fusible links and for resetting fire dampers. Where applicable, access to fire dampers shall be through registers or grilles. Provide identification on access door indicating fire damper within. Letters shall be not less than ½-inch in height.

F. Submit complete information to the Engineer including installation details. Furnish and install sleeves, angles, break-away duct connections, per UL listing.

G. Furnish to the Owner in a suitable storage container not less than six (6) fusible links of each type, size, and rating used on the project. Where required, furnish Greenheck Type CR, CO, or Type C transition sleeves.

2.7 DUCT ACCESS DOORS

A. Furnish and install adequately sized duct access doors at fire dampers, air measuring devices, motor-operated dampers, duct coils and other locations where indicated and required for duct access. Doors shall be the continuous piano-hinged type with approved latches and neoprene compression-type gaskets with 1 inch thick fiberglass double skin and shall be Ruskin Model ADH22, Air Balance, Inc., FSA-100 or as approved equal. Stiffen ductwork at door openings. Where doors are installed in insulated ductwork, provide equivalent insulation in the door assembly. Where access doors are installed in the fire-rated partitions, provide *Fire Seal* access doors as manufactured by Air Balance, Inc., or approved equal, UL approved, meeting the rating of the enclosure in which the access door is installed.

B. Where duct access doors are installed in medium pressure ductwork, they shall be as manufactured by Ruskin, Type ADHP-3, or approved equal, with six latches continuous gasket and insulated core.

C. Seal around frame attachment to duct and door to frame with neoprene or foam rubber.

2.8 SPIN-IN FITTINGS

A. Furnish and install spin-in fittings where indicated on the contract drawings, Model SM-20G, as manufactured by General Environment Corporation, or an approved equal.

2.9 DUCT LINING (LOW PRESSURE DUCTWORK)

A. All low pressure supply ductwork within 10 feet of variable air volume boxes and as shown on Contract Drawings shall be lined on the interior for sound attenuation and thermal insulation.

B. All low pressure ductwork within 10 feet of exhaust air fans and as additionally shown on Contract Drawings shall be lined on the interior for sound attenuation and thermal

insulation.

C. All internal duct lining for low pressure duct systems shall be provided with an interior galvanized perforated liner.

D. Provide additional exterior insulation where required and as indicated in Division 23 Section, "HVAC Insulation".

E. The lining insulation shall be 1 inch thick, 3.0 pcf density, Aeroflex plus Duct Liner Type 300, Owens Corning Quiet R Rotary Duct Liner, Manville, Knauf, or approved equal. The material shall be specifically designed for this application, shall have a black, fire-resistant coating, shall meet NFPA Standards 90A and 90B and shall have a UL Fire Hazard Classification of Flame Spread 25 or less and smoke developed of 10 or less. The black-coated surface shall face the air stream.

F. All exposed edges and the leading edge of all cross joints of the liner shall be coated with the same adhesive used to secure the duct liner to metal surface. All air stream surfaces shall be treated with EPA registered fungicide Foster 40-20. Coating shall meet ASTM D 5590 with 0 growth rating.

G. The duct liner shall be adhered to the metal with 100 percent coverage of adhesive. Adhesive shall conform to Adhesive and Sealant Council Standards for adhesives for duct liner; ASTM C916, Type II (ASC-A-7001-A-1971). Adhesive shall be Foster 85-60, Childers CP-127 or approved equal.

H. The duct liner shall be additionally secured with mechanical fasteners, which shall compress the duct liner sufficiently to hold it firmly in place. Mechanical fasteners shall conform to Mechanical Fastener Standard MF-1-1971, available from Sheet Metal and Air Conditioning Contractors National Association.

I. All duct lining shall be installed in complete accordance with the Sheet Metal and Air Conditioning Contractors National Association (SMACNA) Duct Liner Application Standard, First Edition and Green Guard Indoor Air Quality certification program requirements.

J. Dimensions on drawings indicate inside clear opening of rectangular ductwork. Increase duct dimensions 2 inches each way for accommodating insulation on all shop or field-fabricated rectangular ductwork where lining is specified.

2.10 DUCT LINING (MEDIUM PRESSURE DUCTWORK)

A. Provide additional exterior insulation where required and as indicated in Division 23 Section, "HVAC Insulation".

B. All internal duct lining for medium pressure duct systems shall be provided with interior galvanized perforated liner.

C. The insulation shall be 1 inch thick, 3.0 pcf density, Aeroflex plus Duct Liner Type 300, Owens Corning Quiet R Rotary Duct Lines, Manville, Knauf, or approved equal. The material shall be specifically designed for this application, shall have a black, fire-resistant coating, shall meet NFPA Standards 90A and 90B and shall have a UL Fire

Hazard Classification of Flame Spread 25 or less and smoke developed of 10 or less. The black-coated surface shall face the air stream.

D. All exposed edges and the leading edge of all cross joints of the liner shall be coated with the same adhesive used to secure the duct liner to metal surface. All air stream surfaces shall be treated with EPA registered fungicide Foster 40-20. Coating shall meet ASTM D5590 with 0 growth rating.

E. The duct liner shall be adhered to the metal with 100 percent coverage of adhesive. Adhesive shall conform to Adhesive and Sealant Council Standards for adhesives for duct liner; ASTM C 916 (ASC-A-7001-A-1971). Adhesive shall be Foster 85-60, Childers CP-127 or approved equal.

F. The duct liner shall be additionally secured with mechanical fasteners which shall compress the duct lines sufficiently to hold it firmly in place. Mechanical fasteners shall conform to Mechanical Fastener Standard MF-1-1971, available from Sheet Metal and Air Conditioning Contractors National Association.

G. All duct lining shall be installed in complete accordance with the Sheet Metal and Air Conditioning Contractors National Association (SMACNA) Duct Liner Application Standard, First Edition and Green Guard Indoor Air Quality certification program requirements.

H. Dimensions on drawings indicate inside clear opening of rectangular ductwork. Increase duct dimensions 2 inches each way for accommodating insulation on all shop or field-fabricated rectangular ductwork where lining is specified.

2.11 AIR TERMINAL DEVICES

A. Furnish and install air supply, return, exhaust devices of sizes and capacities as scheduled on the drawings. Catalog numbers shown are Metalaire, Inc., products for equipment which have been found suitable for the application. Products of Tuttle & Bailey, Anemostat, Division of Hart & Cooley, Carnes, Titus, Price, Nailor, or approved equal will be considered only if performance characteristics including throw, drop, pressure loss, sound pressure level, etc., are equal to or better than the performance characteristics of the specified products. All air devices shall be ADC certified. Ductwork behind registers, grilles and diffusers shall be given two coats of flat black paint. Perimeter of all ceiling diffusers shall be caulked to provide a neat, aesthetic appearance.

B. Device Schedule:

AIR DEVICE SCHEDULE		
Device	**Accessories**	**Finish**
Supply Diffusers, Lay-in Tile		
Model 7000-A, Rectangular MetalAire Ceiling Diffuser, Throw as Indicated	Integral opposed blade damper	White baked enamel finish

AIR DEVICE SCHEDULE		
	Removable core	
	Louvered face	
	All aluminum construction	
	Auxiliary panel for lay-in tile installation	
	Adjustable pattern deflector	
Supply Diffuser, Gypboard, Surface Mount		
MetalAire Model 5000, Rectangular Ceiling Diffuser, Throw as Indicated (Surface or Duct Mount)	Integral opposed blade damper	White baked enamel finish
	Louver face	
	All aluminum construction	
	Removable core	
	Adjustable pattern deflector	
Exhaust, Gypboard, Surface Mount		
MetalAire, Model RH Rectangular Registers (Surface Mount)	Integral opposed blade damper	Off-white baked enamel finish
	45 degree angled deflecting vanes	
	All aluminum construction	
Exhaust, Register, Lay-in Tile		
MetalAire, Model RHD Rectangular Registers	Integral opposed blade damper	Off-white baked enamel finish
	45 degree angled deflecting vanes	
	All aluminum construction	
	Auxiliary panel for lay-in tile installation	

C. Where air terminal devices are installed in duct collars or branches, furnish and install air extractors. Furnish and install control grids, volume dampers, and/or other accessories necessary to ensure uniform air flow across the terminal devices. Accessories shall be of the same material as the terminal device. Install fixed blade terminals so that blades block the normal line of vision. Furnish three (3) of each type of removable key operators.

D. Contractor shall determine frame and mounting type as per type of existing ceiling.

E. Noise Criteria: All air devices shall be sized and selected to limit maximum NC (noise criteria) levels to 30.

2.12 OPEN END DUCTS (OED)

A. Whether indicated on plans or not, all open-ended ducts shall be provided with a protective screen.

B. All open-ended ducts shall be furnished with a 12 gauge ½ inch x ½ inch aluminum mesh screen. Screens shall be permanently installed in a removable frame, and the frame shall be attached to the open-ended duct in a neat, workmanship-like manner without any exposed edges or sharp surfaces.

C. Screen shall be attached to a ¾ inch x 1/8 inch continuous galvanized perimeter frame. Install duct stiffeners greater than 16 inches in any direction at open-ended ducts.

2.13 DRIP PANS

A. Furnish and install suitable watertight, aluminum drip pans where water or drain piping is routed over electrical switchgear, transformers, computers, elevator machine equipment, dry storage rooms, etc. Each drip pan shall have a 1 inch copper type *M* drain piped to discharge where shown on drawings; or, if not shown, to discharge over nearest available open drain. Size and arrangement shall be as approved by Engineer. Sides shall be minimum 1.5 inches deep.

B. Drain pans shall be of 16 gauge welded construction. Provide drawings of typical drain pan construction for approval before construction. See Submittals in Division 01 Section, "Product Requirements".

2.14 DUCT SEALANTS AND ADHESIVES

A. All ductwork shall be sealed, including low pressure exhaust systems. Transverse joints and longitudinal seams in duct systems shall be sealed with a duct sealant of the type specified hereinafter in Section 1, 2, or 3, or with a tape sealing system as specified in Section 4. Spiral lockseams are not longitudinal seams and do not require duct sealant. All seams and joints shall require duct sealant suitable for the pressure rating and installation application. All sealants shall exceed 500 hours without becoming brittle under ASTM-D572 test conditions (oxygen bomb), unless specified otherwise. No surface preparation or solvent cleaning shall be necessary to remove light coatings of oil and dust before applying sealant unless specified otherwise. Flanged joints shall be sealed according to Section 5. Construction joints that are not fully welded shall be sealed according to Section 6. Adhesive to secure insulation to metal surfaces shall be that specified in Section 7.

1. Assembly joints to be installed indoors or outdoors shall be sealed with Foster 32-19, Childers CP-146, United Duct Sealer WB, or equivalent, which is a water-based sealant formulated to withstand service temperatures from 20 degrees F to +200 degrees F. Sealant shall have a UL Classification marking with a flame spread of 15 and smoke developed of 0 when applied to inorganic reinforced

cement board, both at a coverage of 31 square feet per gallon. Store and apply between 40°F (4°C) and 100°F (38°C); protect from freezing.

2. Assembly joints to be installed indoors shall be sealed with Foster 32-19, childers CP-146, UNI-GRIP™ duct sealer or equivalent, which is a water-based (vinyl-acrylic polymer) sealant formulated to withstand temperatures from –20 degrees to +200 degrees Fahrenheit. Surfaces to be sealed should be clean, dry, and free from oil, grease, and dirt. Sealant shall be nonflammable (wet) and fire retardant. Sealant shall have a UL Classification marking with a flame spread of 5 and smoke developed of 5 when applied to 18-gauge galvanized steel and a flame spread of 0 and smoke developed of 0 when applied to inorganic reinforced cement board, both at a coverage of 40 square feet per gallon.

3. Assembly joints shall be sealed with UNI-CAST® tape sealing system or equivalent, which is a combination of an adhesive activator and woven-fiber tape impregnated with a gypsum mineral compound. Modified acrylic/silicone activator (MTA-20 for indoor use) reacts exothermically with the tape to form a hard, airtight seal. Sealant shall be formulated to withstand temperatures from –40 degrees F to +200 degrees Fahrenheit. Combination of tape and MTA-20 adhesive shall have a flame spread and smoke developed of 0. Do not use for outdoors.

4. Flanged joints to be installed indoors shall be sealed with UNI-GASKET™ flange sealer or equivalent, which has a synthetic elastomer base and is formulated to withstand temperatures from –20 degrees F to +150 degrees F. Sealant shall have a UL Classification marking with a flame spread of 5 and smoke developed of 5 when applied to 18-gauge galvanized steel and a flame spread of 0 and smoke developed of 5 when applied to inorganic reinforced cement board, both at a coverage of 80 square feet per gallon.

5. Where duct fittings are constructed with standing seam or spot-welded techniques, all construction joints shall be sealed with UNI-WELD™ metal cement or equivalent, which is composed of neoprene rubber, resins, and inert reinforcing material dispersed in a petroleum distillate. Sealant shall be formulated to withstand temperatures from –20 degrees F to +225 degrees F. Sealant shall have a UL Classification marking with a flame spread of 0 and smoke developed of 0 when applied to 18-gauge galvanized steel and a flame spread of 0 and smoke developed of 0 when applied to inorganic reinforced cement board, tested as applied in two 1/8 inch beads 8 inches on center.

6. Where insulation is to be secured to metal surfaces, the adhesive used shall be Foster 85-60, Childers CP-127, UNI-TACK™ duct liner adhesive or equivalent, which are water-based, vinyl-acrylic copolymer adhesives formulated to withstand temperatures from –20 degrees Fahrenheit to +200 degrees Fahrenheit. Adhesive shall have a UL Classification marking with a flame spread of 0 and smoke developed of 0 when applied to 18-gauge galvanized steel and a flame spread of 0 and smoke developed of 0 when applied to inorganic reinforced cement board, both at a coverage of 267 square feet per gallon. Adhesive shall conform to ASTM C916, Type II.

B. Manufacturers: Duct Mate, United McGill, Semco, Elgen, Childers, Foster, or as

approved equal.

PART 3 EXECUTION

3.1 DUCT INSTALLATION REQUIREMENTS

A. Coordinate ductwork with other work and install ducts at proper elevations and locations to maintain indicated ceiling heights and clearances. Provide all elbows, transitions, offsets, connections, and other fittings necessary to fit the work into place or to connect to equipment or diffusers. Method of duct support connection to structure and slabs shall be approved by Structural Engineer, and Shop Drawings shall be submitted.

B. Substantially support ductwork with structural shapes, flat bars, or formed strap hangers securely attached to the building structure by means of bolts, clamps, or inserts. Support vertical ducts by angles attached to the duct and resting on the floor or supported by brackets or hangers attached to the building structure. Strap hangers shall be 16-gauge minimum galvanized steel formed under the bottom edge of duct. Use square ¼ inch thick washers tight against the bend on upper strap attachments to horizontal surfaces. Place all supports external to the ductwork and out of the air stream. Provide additional supports at coils and other concentrated loads. Arrange supports so that duct weight is not transmitted to ceilings, fans or other equipment.

C. Prevent direct contact between ductwork and building surfaces or other equipment. Where ducts pass through walls, partitions, floors, ceilings, or roofs, pack and seal the space around the duct with an approved fire-safe inert material. Provide flanged duct escutcheons at all exposed ducts that pass through walls, partitions, floors, and ceilings.

D. Use galvanized (compatible) corrosion-resistant hangers, supports, brackets, and hardware.

E. Furnish and install NFPA-approved duct connections where shown and at all connections to fans, air handling units, and similar rotating equipment. Use glass-reinforced neoprene fabric, roll-formed to sheet metal strips or flanges. Support adjacent ductwork to provide sufficient slack in the connection. For corrosive or chemical fume duct systems utilize chemical resistant flexible connections.

F. See NFPA 90A, and latest publication of SMACNA. Prevent direct contact between ductwork and building surfaces or other equipment. The opening in the construction around the duct shall not exceed one-inch average clearance on all sides. Where ducts pass through walls, partitions, floors, ceilings, or roofs, pack and seal the space around the duct with an approved fire-safe inert material capable of preventing the passage of flame and hot gases sufficiently to ignite cotton waste when subjected to the same NFPA 251 Time-Temperature Conditions required for fire barrier penetration. All exposed duct penetrations shall be finished with a sheet metal field erected flange escutcheon to form a neat appearance.

G. Coordinate duct installation with the requirements of Division 23 Section, “Vibration Controls for HVAC, Plumbing & Fire Protection Equipment”.

H. Install in accordance with manufacturer’s instructions.

I. Install and seal ducts in accordance with SMACNA *HVAC Duct Construction Standards - Metal and Flexible.*

J. Duct Sizes are inside clear dimensions. For lined ducts, maintain sizes inside lining.

K. Provide openings in ductwork where required to accommodate thermometers and controllers. Provide pitot tube openings where required for testing of systems, complete with metal can with spring device or screw to ensure against air leakage. Where openings are provided in insulated ductwork, install insulation material inside a metal ring.

L. Locate ducts with sufficient space around equipment to allow normal operating and maintenance activities.

M. Use crimp joints, with or without bead, for joining round duct sizes eight (8) inches and smaller with crimp in direction of air flow.

N. Use double nuts and lock washers on threaded rod supports.

O. Set plenum doors 6 to 12 inches (150 to 300 mm) above floor. Arrange door swings so that fan static pressure holds door in closed position.

P. During construction, provide temporary closures of metal or taped polyethylene on open ductwork to prevent construction dust from entering ductwork systems.

3.2 ACCESSORY INSTALLATION REQUIREMENTS

A. Install accessories in accordance with manufacturer's instruction, NFPA 90A, and SMACNA HVAC Duct Construction Standards - Metal and Flexible.

B. Provide duct access doors for inspection and cleaning before and after filters, coils, fans, automatic dampers, at fire dampers, duct-mounted equipment, duct coils and elsewhere as indicated. Review locations prior to fabrication.

C. Provide duct test holes where required for testing and balancing purposes. Review locations with Test and Balance Engineer prior to installation.

D. Provide fire dampers at locations indicated, where ducts and outlets pass through fire-rated components, and where required by authorities having jurisdiction. Install with required perimeter mounting angles, sleeves, breakaway duct connections, corrosion-resistant springs, bearings, bushings and hinges.

E. Demonstrate re-setting of fire dampers to Owner's representative.

F. Provide flexible connections immediately adjacent to equipment in ducts associated with fans and motorized equipment and supported by vibration isolators. Refer to Division 23 Section, "Vibration Control for HVAC and Plumbing Systems".

G. Provide balancing dampers at points on supply, return, and exhaust systems where branches are taken from larger ducts as required for air balancing. Install minimum duct widths from duct take-off.

H. Provide balancing dampers on duct take-off to diffusers, grilles, and registers, regardless of whether dampers are specified as part of the diffuser, grille, or register assembly.

I. Install diffusers, registers, and grilles to ductwork with airtight construction.

J. Check location of all air outlets and inlets and make necessary adjustments in position to conform with architectural features, symmetry, and lighting arrangements.

K. Install duct thermometer support flanges in wall of duct. Attach to duct with screws. Locate duct mounted thermometers, minimum 10 feet downstream of mixing dampers, coils or other devices causing air turbulence.

L. Install remote - reading duct dial thermometers in control panels with tubing connecting panel and thermometer bulb supported to prevent kinks. Use minimum tubing length. Mount control panel 60 inches above finished floor and label each dial thermometer.

M. Install duct accessories according to applicable details shown in SMACNA's *HVAC Duct Construction Standards--Metal and Flexible* for metal ducts.

N. Install volume dampers in lined duct; avoid damage to and erosion of duct liner.

O. Provide test holes at fan inlet and outlet and elsewhere as indicated.

P. Install fire dampers according to manufacturer's UL-approved written instructions.

1. Install fusible links in fire dampers. Label access doors according to equipment served.

Q. Adjust duct accessories for proper settings.

R. Adjust fire dampers for proper action.

3.3 DUCT LINING INSTALLATION REQUIREMENTS

A. All portions of duct designated to receive duct liner shall be completely covered with duct liner. Transverse joints shall be neatly butted and there shall be no interruptions or gaps. The black pigmented or mat faced surface of the duct liner shall face the airstream.

B. Duct liner shall be adhered to the sheet metal. with 90 percent coverage of adhesive complying with requirements of ASTM C916. All exposed leading edges and transverse joints shall be factory coated or coated with adhesive during fabrication. Install perforated galvanized inner liner where indicated

C. Duct liner shall be additionally secured with mechanical fasteners, either weld-secured or impact-driven, which shall compress the duct liner sufficiently to hold it firmly in place. Adhesive bonded pins are not permitted due to long term adhesive aging characteristics. Spacing of mechanical fasteners with respect to duct liner interior width shall be in accordance with SMACNA HVAC DGS. Maximum spacing for mechanical fasteners shall be as follows:

Velocity = 0 to 2,500 feet per minute (0 to 12.8m/s):

From transverse end of liner	3: (75mm)
Across width of duct	12 inches (300 mm) O.C.
From corners of duct	4 inches (100mm)
Along length of duct	18 inches (450mm) O.C.

Velocity = 2,501 to 5,000 feet per minute (12.8 to 25.4 m/s):

From transverse end of liner	3 inches (75m)
Across width of duct	6 inches (150mm) O.C.
From corners of duct	4 inches (100mm)
Along length of duct	16 inches (400mm) O.C.

D. When air velocities exceed 4,000 fpm (20.3m/s), galvanized sheet metal nosing shall be applied to all leading edges of duct liner.

E. Acoustical Duct Liner shall be cut to assure overlapping and compressed longitudinal corner joints.

F. Upon completion of installation of duct liner and before operation is to commence, visually inspect the system and verify that the duct liner insulation has been correctly installed.

G. Open all system dampers and turn on fans to blow all scraps and other loose pieces of material out of the duct system. Allow for a means of removal of such material.

H. Check the duct system to ensure that there are no air leaks through joints.

3.4 CLEANING

A. Clean duct system and force air at high velocity through ducts to remove accumulated dust. To obtain sufficient air, clean half the system at a time. Protect equipment which may be harmed by excessive dirt with temporary filters, or bypass during cleaning.

B. Clean duct systems with high power vacuum machines. Protect equipment which may be harmed by excessive dirt with filters, or bypass during cleaning. Provide adequate access into ductwork for cleaning purposes.

C. Ductwork shall be cleaned in accordance with “Duct Cleanliness for New Construction (SMACNA 2000)”, and shall achieve a “Basic” cleanliness level.

3.5 LEAKAGE TESTS

A. All low pressure sheet metal ductwork shall undergo leakage tests at 2 inch W.G. Tests shall be accomplished under this section and witnessed as specified under Division 23 Section, “Testing, Adjusting, and Balancing for HVAC and Plumbing”.

B. All medium pressure sheet metal ductwork shall undergo leakage tests at 5 inch W.G. Tests shall be accomplished under this section and witnessed as specified under Division 23 Section, “Testing, Adjusting, and Balancing for HVAC and Plumbing”.

C. Leakage from each duct system shall not exceed 5 percent for low pressure systems and 1 percent for medium pressure systems of the normal air handling capacity of the system.

If the system ductwork is tested in sections, the leakage shall not exceed ½ of 1 percent of the CFM to be handled by that section, and the total leakage of the system shall not exceed 1 percent of the total system CFM. Test pressure shall not exceed the pressure limits of the duct construction as defined in SMACNA *High Pressure Duct Construction Standards*. Repair all leaks which are audible, regardless of the leakage rate of the duct system as a whole, by remaking the entire defective joint or seam. Spot sealing of ducts in place *will not* be acceptable.

D. All duct accessories, including but not limited to volume dampers, ATC sensors, duct detectors, duct coils shall be installed prior to duct leakage testing.

E. Submit a complete report of the ductwork leakage tests to the Engineer and include final approved copies in test and balance reports.

3.6 DUCTWORK IDENTIFICATION

A. Degrease and clean surfaces to receive adhesive for identification materials.

B. All ductwork shall be identified with painted background marked with the name of the service with arrows to indicate flow direction. Color Code and System Identification shall comply with ANSI Standards.

C. Marking shall be plain block letters, stenciled on ductwork (above and below ceilings) and shall be located near each branch connection and at least every ten feet on straight runs of ductwork. Where ductwork is aligned adjacent to each other, markings shall be neatly lined up. All markings shall be located in such a manner as to be easily legible from the floor.

D. Identify ductwork with plastic nameplates or stenciled painting. Identify with air handling unit identification and area served.

E. Length of color field for ductwork shall be 32 inches. Lettering shall be minimum 3-1/2 inches high.

END OF SECTION

DIVISION 26
SECTION 260500
COMMON WORK RESULTS FOR ELECTRICAL
TABLE OF CONTENTS

PART 1 GENERAL

1.1 RELATED DOCUMENTS
1.2 ALTERNATES
1.3 SUMMARY
1.4 CONTRACTOR QUALIFICATION
1.5 PERMITS, FEES, AND INSPECTIONS
1.6 EXAMINATION OF SITE
1.7 INTERPRETATION OF DOCUMENTS
1.8 MATERIALS AND EQUIPMENT
1.9 ELECTRICAL WORK UNDER OTHER DIVISIONS
1.10 FIRE SAFE MATERIALS
1.11 REFERENCED STANDARDS, CODES, AND SPECIFICATIONS
1.12 SUBMITTALS
1.13 SUBMITTAL PROCEDURES
1.14 SHOP DRAWINGS
1.15 DEFINITIONS
1.16 RECORD DRAWINGS
1.17 WARRANTY
1.18 OPERATION AND MAINTENANCE MANUALS
1.19 INSTALLATION AND COORDINATION DRAWINGS

PART 2 PRODUCTS

2.1 SLEEVES FOR RACEWAYS AND CABLES
2.2 GROUT

PART 3 EXECUTION

3.1 COMMON REQUIREMENTS FOR ELECTRICAL INSTALLATION
3.2 SLEEVE INSTALLATION FOR ELECTRICAL PENETRATIONS
3.3 FIRESTOPPING
3.4 SUPPORTS, HANGERS, AND FOUNDATIONS
3.5 PROVISIONS FOR ACCESS
3.6 PAINTING AND FINISHES
3.7 COLOR SELECTION
3.8 PROTECTION OF WORK
3.9 OPERATION OF EQUIPMENT
3.10 TESTING AND ADJUSTMENT
3.11 WALL AND FLOOR PENETRATIONS
3.12 EQUIPMENT BY OTHERS
3.13 OUTAGES
3.14 CUTTING AND PATCHING
3.15 PENETRATION OF WATERPROOF CONSTRUCTION
3.16 CONCRETE AND MASONRY WORK
3.17 CONNECTIONS AND ALTERATIONS TO EXISTING WORK

3.18 COORDINATION
3.19 DEMOLITION

SECTION 260500 - COMMON WORK RESULTS FOR ELECTRICAL

PART 1 GENERAL

1.1 RELATED DOCUMENTS

A. Drawings and general provisions of the Contract, including General and Supplementary Conditions and Division 01 Specification Sections, apply to this Section.

1.2 ALTERNATES

A. Refer to Division 01 Section, "Alternates" for description of work under this Division affected by Alternates.

1.3 SUMMARY

A. Section Includes:

1. Electrical equipment coordination and installation.

2. Sleeves for raceways and cables.

3. Grout.

4. Common electrical installation requirements.

B. Provide all labor, materials, equipment, and services necessary for and incidental to the complete installation and operation of all electrical work.

C. Unless otherwise specified, all submissions shall be made to, and acceptances and approvals made by the Architect and the Engineer.

D. Contract Drawings are generally diagrammatic and all offsets, fittings, transitions and accessories are not necessarily shown. Furnish and install all such items as may be required to fit the work to the conditions encountered.

E. Arrange conduits, equipment, and other work generally as shown on the Contract Drawings, providing proper clearance and access. Where departures are proposed because of field conditions or other causes, prepare and submit detailed shop drawings for approval in accordance with Article "Submittals" specified below. The right is reserved to make reasonable changes in location of equipment, boxes, conduit/wiring, and devices, up to the time of rough-in or fabrication.

F. Conform to the requirements of all rules, regulations and codes of local, state and federal authorities having jurisdiction.

G. Coordinate the work under Division 26 with the work of all other construction trades.

H. Be responsible for all construction means, methods, techniques, procedures, and phasing sequences used in the work. Furnish all tools, equipment and materials necessary to properly

perform the work in first class, substantial, and workmanlike manner, in accordance with the full intent and meaning of the Contract Documents.

1.4 CONTRACTOR QUALIFICATION

A. Any Contractor or Subcontractor performing work under Division 26 shall be fully qualified and acceptable to the Architect/Engineer and Owner. Submit the following evidence when requested:

1. A list of not less than five comparable projects which the Contractor completed.

2. Letter of reference from not less than three registered professional engineers, general contractors or building owners.

3. Local and/or State License, where required.

4. Membership in trade or professional organizations where required.

B. A Contractor is any individual, partnership, or corporation, performing work by contract or subcontract on this project.

C. Acceptance of a Contractor or Subcontractor will not relieve the Contractor or subcontractor of any contractual requirements or his responsibility to supervise and coordinate the work, of various trades.

1.5 PERMITS, FEES, AND INSPECTIONS

A. Obtain all permits and pay taxes, fees and other costs in connection with the work. File necessary plans, prepare documents, give proper notices and obtain necessary approvals. Deliver inspection and approval certificates to Owner prior to final acceptance of the work.

B. Permits and fees shall comply with Division 01 Section, *General Requirements*.

C. Notify Inspection Authorities to schedule inspections of work.

D. Notify Engineer in advance of scheduled inspections.

E. An electrical foreman, superintendent or other supervisor shall be in attendance for all scheduled inspections.

1.6 EXAMINATION OF SITE

A. Examine the site, determine all conditions and circumstances under which the work must be done, and make all necessary allowances for same. No additional cost to the Owner will be permitted for Contractor's failure to do so.

B. Examine and verify specific conditions described in individual Specifications sections.

C. Verify that utility services are available, of the correct characteristics, and in the correct locations.

1.7 INTERPRETATION OF DOCUMENTS

A. Any discrepancies between Drawings, Specifications, Drawings and Specifications, or within Drawings and Specifications shall be promptly brought to the attention of the Owner during the bidding period. No allowance shall subsequently be made by reason of failure to have brought said discrepancies to the attention of the Owner during the bidding period or of any error on the Bidder's part.

B. The locations of products shown on Drawings are approximate. Place the devices to eliminate all interference with overhead ducts, piping, etc. Where any doubt exists, the exact location shall be determined by the Owner.

C. No electrical equipment, e.g. disconnect switches, motor controllers, etc. shall be installed beneath ductwork, piping, etc.

D. All general trades and existing conditions shall be checked before installing any outlets, power wiring, etc.

E. Equipment sizes shown on the Drawings are estimated. Before installing any wire or conduit, obtain the exact equipment requirements and install wire, conduit, or other item of the correct size for the equipment actually installed. However, wire and conduit sizes shown on the Drawings shall be taken as a minimum and shall not be reduced without written approval from the Owner.

F. Where variances occur between the Drawings and Specifications or within either document itself, the item or arrangement of better quality, greater quality, or higher cost shall be included in the Contract Price. The Engineer will decide on the item and manner in which the work shall be installed.

G. Contract Drawings are generally diagrammatic and all offsets, fittings, transitions, and accessories are not necessarily shown. Furnish and install all such items as may be required to fit the work to the conditions encountered. Arrange conduits, equipment, and other work generally as shown on the Contract Drawings, providing proper clearance and access. Where departures are proposed because of field conditions or other causes, prepare and submit detailed Shop Drawings for approval in accordance with Article "Submittals" as herein after specified. The right is reserved to make reasonable changes in location of equipment, conduit/wiring, and devices, up to the time of rough-in or fabrication.

H. Work not specifically outlined, but reasonably incidental to the completion of the work, shall be included without additional compensation from the Engineer, and Owner.

I. Perform the work in a first-class, substantial and workmanlike manner. Any materials installed which do not present an orderly and neat workmanlike appearance shall be removed and replaced when so directed by the Engineer, at the Contractor's expense.

J. The complete set of Mechanical and Electrical Drawings and Specifications apply to this work. The successful Bidder shall familiarize himself with all other related documents.

1.8 MATERIALS AND EQUIPMENT

A. Materials and equipment installed as a permanent part of the project shall be new, unless otherwise indicated or specified, and of the specified type and quality. Existing items of equipment are being reconnected under another Division of these Specifications. The Contractor shall be responsible for connecting all utilities as shown on the Drawings, to equipment identified as existing.

B. Where material or equipment is identified by proprietary name, model number and/or manufacturer, furnish named item, or its equal, subject to approval by Engineer. Substituted items shall be equal or better in quality and performance and must be suitable for available space, required arrangement, and application. Submit all data necessary to determine suitability of substituted items, for approval.

C. The suitability of named item only has been verified. Where more than one item is named, only the first named item has been verified as suitable. Substituted items, including items other than first named shall be equal or better in quality and performance to that of specified items, and must be suitable for available space, required arrangement and application. Contractor, by providing other than the first named manufacturer, assumes responsibility for all necessary adjustments and modifications necessary for a satisfactory installation. Adjustments and modifications shall include but not be limited to electrical, structural, support, and architectural work.

D. Substitution will not be permitted for specified items of material or equipment where noted.

E. All items of equipment furnished shall have a service record of at least five (5) years.

1.9 ELECTRICAL WORK UNDER OTHER DIVISIONS

A. Architectural Equipment and Systems

1. In general, any electrically operated or controlled equipment furnished under Architectural divisions shall be supplied with control wiring, transformers, contacts, etc.

2. Division 26 shall provide power circuits to such equipment and a disconnecting means for each piece of equipment, as well as all electrical control equipment and wiring related thereto.

3. Architectural Equipment refers to, but is not limited to the following:

a. Cabinets, Casework and Countertops

1) Do not install outlets, switches, etc. behind casework, cabinets, etc.
2) Receptacle outlets and data/telephone outlets shall be mounted above the countertops unless otherwise indicated.
3) Where outlets are installed below countertops, provide grommets through countertops for cabling.
4) Coordinate outlets above and below countertops and associated surface raceways with casework to avoid conflicts with sinks and other appurtenances.

B. HVAC Equipment and Systems

1. In general, any electrically operated or controlled equipment furnished under HVAC divisions shall be supplied with control wiring, transformers, contacts, etc.

2. Division 26 shall provide power circuits to such equipment and a disconnecting means for each piece of equipment, as well as all electrical control equipment and wiring related thereto.

3. Certain mechanical units are furnished from the factory with motor starters, contactors, transformers, fuses, wiring, etc., required for fans, pumps, etc. When this equipment is supplied from the factory, Division 26 shall coordinate with Division 23 such that only one set of starters, fuses, switches, etc. is provided.

4. Some HVAC equipment must be protected by fuses, which shall be marked on the equipment nameplate. In these instances, if the equipment has an integral non-fused disconnecting means, the fusible safety switch indicated on the electrical drawings must remain per NEC Article 440.

5. In general, control and interlock equipment (including, but not limited to wiring, conduit, transformers, relays, contacts, etc.) for HVAC equipment and systems is furnished under Division 23. Division 26 shall install and connect all equipment as necessary.

6. HVAC equipment refers to, but is not limited to the following:

    a. Air Handling Units
    b. ATC Panels
    c. Variable Air Volume Boxes
    d. Ductwork

        1) Do not install any electrical equipment, including but not limited to switchboards, transformers, panelboards, safety switches, motor controllers, etc. beneath ductwork. Where this cannot be accomplished due to field conditions, notify the Engineer in writing.

    e. Exhaust Fans
    f. Freeze Protection Pumps
    g. Pumps

C. Owner Furnished Equipment and Systems

1. In general, any electrically operated or controlled equipment furnished by the Owner shall be supplied with control wiring, transformers, contacts, etc.

2. Division 26 shall provide power circuits to such equipment and a disconnecting means for each piece of equipment, as well as all electrical control equipment and wiring related thereto.

3. Owner equipment refers to, but is not limited to the following:

    a. Classroom and Lab Equipment

        1) Includes, but is not limited to exhaust/fume hoods, etc.

2) Verify equipment nameplates and connection requirements prior to rough-in.
3) Coordinate mounting heights and locations of outlet boxes serving equipment with approved product data and approved casework shop drawings where applicable.

D. Plumbing Equipment and Systems

1. In general, any electrically operated or controlled equipment furnished under Plumbing divisions shall be supplied with control wiring, transformers, contacts, etc.

2. Division 26 shall provide power circuits to such equipment and a disconnecting means for each piece of equipment, as well as all electrical control equipment and wiring related thereto.

3. Certain plumbing units are furnished from the factory with motor starters, contactors, transformers, fuses, wiring, etc., required for pumps, etc. When this equipment is supplied from the factory, Division 26 shall coordinate with Division 22 such that only one set of starters, fuses, switches, etc. is provided.

4. In general, control and interlock equipment (including, but not limited to wiring, conduit, transformers, relays, contacts, etc.) for plumbing equipment and systems is furnished under Division 22. Division 26 shall install and connect all equipment as necessary.

5. Plumbing equipment refers to, but is not limited to the following:

a. Piping

1) Do not install any electrical equipment, including but not limited to safety switches, motor controllers, etc. beneath piping. Where this cannot be accomplished due to field conditions, notify the Engineer in writing.

1.10 FIRE SAFE MATERIALS

A. Unless otherwise indicated, materials and equipment shall conform to UL, NFPA and ASTM standards for fire safety with smoke and fire hazard rating not exceeding flame spread of 25 and smoke developed of 50.

1.11 REFERENCED STANDARDS, CODES AND SPECIFICATIONS

A. Specifications, Codes and Standards listed below are included as part of this Specification, latest edition:

1. ADA - Americans with Disabilities Act

2. ANSI - American National Standards Institute

3. ASTM - American Society for Testing and Materials

4. CSA - Canadian Standards Association

5. EPA - Environmental Protection Agency

6. FM - Factory Mutual

7. IBC - International Building Code

8. IEEE - Institute of Electrical and Electronics Engineers

9. NEC - National Electrical Code

10. NECA - National Electrical Contractors Association

11. NEMA - National Electrical Manufacturers Association

12. NFPA - National Fire Protection Association

13. OSHA - Occupational Safety and Health Act

14. UL - Underwriters' Laboratories

B. The application standards of the local electric utility company.

C. Electrical construction materials shall, where a listing is normal for the particular class of material, be listed in *Electrical Construction Materials List* of the Underwriters' Laboratories, Inc. (U.L.) and shall bear the listing label. Electrical equipment shall, where a listing is normal for the particular class of equipment, be listed in the *Electrical Appliance and Utilization Equipment List* of the Underwriters' Laboratories, Inc. (U.L.) and shall bear the listing label. Materials and equipment listed and labeled as "approved for the purpose" by other nationally recognized testing laboratory, inspection agency or approved organization (such as E.T.L. or Factory Mutual) shall be acceptable.

1.12 SUBMITTALS

A. Product Data: Include complete descriptive product data for items specified in Part 2 of this Section.

1.13 SUBMITTAL PROCEDURES

A. Refer to Division 01, Section “Submittal Procedures” for requirements in addition to those indicated herein.

B. Equipment, materials, installation, workmanship and arrangement of work are subject to review and acceptance. No substitution will be permitted after acceptance of equipment or materials except where such substitution is considered by the Engineer, to be in the best interest of the Owner.

C. After acceptance of Material and Equipment List, submit six (6) copies, or more as required under the General Conditions, of complete descriptive data for all items as outlined below.

D. Electronic submittals shall be prepared as a Portable Document Format (PDF) file and shall include as page 1 the Contractor’s stamp, followed by the submittal contents. Submittal form

shall identify the Project, Contractor, Subcontractor or Supplier, and pertinent Contract Document references.

E. Submittals shall consist of specifications, product data sheets, manufacturer's catalog cuts, dimensional shop drawings, wiring diagrams, installation instructions, samples, and any other information necessary to indicate complete compliance with Contract Documents.

F. Submittals shall include, but not be limited to, the following information: size, type, functional characteristics, compliance with standards in Division 26, required service access which shall be suitable for intended location and use, electrical service connections and requirements, and deviations from Contract Document requirements.

G. Identify submittals, indicating intended application, location and service of submitted items. Refer to Specification sections or paragraphs and Drawings where applicable.

H. Clearly indicate exact type, model number, style, size, operating characteristics, ratings, options and special features of proposed item specifically for application to this project. Submittals of a general nature will not be acceptable.

I. Submit actual operating conditions or characteristics for all equipment where required capacities are indicated. Factory order forms showing only required capacities will not be acceptable. Call attention, in writing, to deviation from contract requirements.

J. Thoroughly review and stamp all submittals to indicate compliance with contract requirements prior to submission. Coordinate installation requirements and all electrical requirements for equipment submitted. The Contractor shall be responsible for correctness of all submittals.

K. Submittals will be reviewed for general compliance with design concept in accordance with Contract Documents, but dimensions, quantities, or other details will not be verified.

L. For any submittal requiring more than two (2) reviews by the Engineer (including those caused by a change in subcontractor or supplier) the Owner will withhold Contractor's funds by a change order to the contract to cover the cost of additional reviews. One review is counted for each action including rejection or return of any reason.

M. For substituted items, clearly list on the first page of the submittal all differences between the specified item and the proposed item. The Contractor shall be responsible for corrective action and maintaining the Specification requirements if differences have not been clearly indicated in the submittal.

N. Acceptance will not constitute waiver of contract requirements unless deviations are specifically indicated and clearly noted. Use only final or corrected submittals and data prior to fabrication and/or installation.

O. Every submittal including, but not limited to the list below, shall be forwarded with its own transmittal as a separate, distinct submittal. Identify all submittals by the name of the item/system and the applicable Specification Section and/or Drawing number. Grouping of items/systems that are not related shall be unacceptable.

<u>Items and Systems</u>

1. Access Doors

2. Circuit Breakers
3. Conductors and Cables - 600V or Less
4. Conduit and Raceway
5. Connectors and Splices
6. Disconnect (Safety) Switches
7. Electrical Connection Coordination Schedule
8. Equipment Nameplates/Labels
9. Firestopping Materials
10. Fuses, 600V or Less
11. Ground Conductors
12. Grout
13. Hangers and Supports
14. Identification Products
15. Installation/Coordination Drawings
16. Installer Certificates
17. Junction and Pull Boxes, Standard Sizes
18. Lightning Protection System
19. Motor Controllers
20. Operation and Maintenance Manual
21. Outlet and Device Boxes
22. Panelboard Circuit Directories
23. Panelboards
24. Qualification Data
25. Receptacles
26. Record Drawings
27. Roof Penetration Boots /Curbs
28. Sleeves
29. Surface Metal Raceway
30. Test Reports
31. Toggle/Snap Switches

P. Submit for approval any other submittals as required by the Engineer or Owner. No item listed above shall be delivered to the site, or installed, until approved. After the proposed materials have been approved, no substitution will be permitted except where approved by the Engineer.

Q. For resubmissions, the Contractor must address in writing all of the Engineer's comments on the original submission to verify compliance.

1.14 SHOP DRAWINGS

A. Prepare and submit Shop Drawings for all electrical equipment, specially fabricated items, modifications to standard items, specially designed systems where detailed design is not shown on the Contract Drawings, or where the proposed installation differs from that shown on Contract Drawings.

B. Shop drawings shall include identification of products being installed, compliance with specified standards, notation of coordination requirements, notation of dimensions verified by field measurement, etc. Do not base shop drawings on reproductions of the Contract Documents or standard printed data.

C. Submit shop drawings concurrent with product data. Shop drawings received without associated product data will be returned without review.

D. Submit for approval schematic diagrams of each electrical system installed in the building, including but not limited to Riser Diagrams and Schematic Wiring Diagrams for the following systems:

1. Lightning Protection System

E. Shop Drawing diagrams shall indicate device location, service, type, make, model number and the identification number of each device in the particular system. Following approval by all authorities, the diagrams shall be inserted into the O&M Manual specified herein.

F. Submit for approval any other shop drawings as required by the Engineer or Owner. No item listed above shall be delivered to the site, or installed, until approved. After the proposed materials have been approved, no substitution will be permitted except where approved by the Engineer.

G. For any shop drawing requiring more than two (2) reviews by the Engineer (including those caused by a change in subcontractor or supplier) the Owner will withhold Contractor's funds by a change order to the contract to cover the cost of additional reviews. One review is counted for each action including rejection or return for any reason.

H. Refer to individual Specification Sections and Contract Drawings for additional shop drawing requirements.

I. For resubmissions, the Contractor must address in writing all of the Engineer’s comments on the original submission to verify compliance.

1.15 DEFINITIONS

A. *Approve*: To permit use of material, equipment or methods conditional upon compliance with contract documents requirements.

B. *Building Line*: Exterior wall of building.

C. *Concealed:* Hidden from sight in chases, formed spaces, shafts, hung ceilings, or embedded in construction or attic.

D. *Conduits:* Include conduit, all fittings, identification, and other accessories relative to such conduit.

E. *Contractor:* The Electrical Contractor and any of his subcontractors, vendors, suppliers, or fabricators.

F. *EPDM*: Ethylene-propylene-diene terpolymer rubber

G. *Exposed:* Not installed underground or *concealed* as defined above.

H. *Finished Spaces*: Spaces other than mechanical and electrical equipment rooms, furred spaces, pipe and duct shafts, unheated spaces immediately below roof, spaces above ceiling, unexcavated spaces, crawl spaces, and tunnels.

I. *Furnish and install* or *Provide*: To supply, erect, install, and connect to complete for readiness for regular operation, the particular work referred to.

J. *Location, Damp*: Locations protected from water and not subject to saturation with water or other liquids, but subject to moderate degrees of moisture. Examples of such locations include interior locations such as basements, crawlspaces, attics, cold-storage rooms, etc…

K. *Location, Dry*: A location not normally subject to dampness or wetness. A dry location may temporarily be subject to dampness or wetness during building construction.

L. *Location, Wet*: Locations subject to saturation with water or other liquids, locations exposed to weather, and installations underground or in concrete slabs or masonry in direct contact with the Earth. Examples of such locations include all exterior locations (including those under canopies, roofed open porches, etc…) commercial kitchens, and vehicle washing areas.

M. *NBR*: Acrylonitrile-butadiene rubber.

N. *Review*: Limited observation or checking to ascertain general conformance with design concept of the work and with information given in contract documents. Such action does not constitute a waiver or alteration of the contract requirements.

1.16 RECORD DRAWINGS

A. Upon completion of the electrical installations, the Contractor shall deliver to the Engineer one complete set of prints of the electrical Contract Drawings which shall be legibly marked in red pencil to show all changes and departures of the installation as compared with the original design. They shall be suitable for use in preparation of Record Drawings.

B. Contractor shall incorporate all sketches, addendums, value engineering, change orders, etc., into record drawings prior to delivering the same to the Architect.

1.17 WARRANTY

A. Contractor's attention is directed to warranty obligations contained in the General Conditions.

B. The above shall not in any way void or abrogate equipment manufacturer's guarantee or warranty. Certificates of equipment manufacturer’s warranties shall be included in the operations and maintenance manuals.

C. The Contractor guarantees for a two (2) year period from the time of final acceptance by the Owner:

1. That the work contains no faulty or imperfect material or equipment or any imperfect, careless, or unskilled workmanship.

2. That all work, equipment, machines, devices, etc. shall be adequate for the use to which they are intended, and shall operate with ordinary care and attention in a satisfactory and efficient manner.

3. That the Contractor will re-execute, correct, repair, or remove and replace with proper work, without cost to the Owner, any work found to be deficient. The Contractor shall also make good all damages caused to their work or materials in the process of complying with this section.

4. That the entire work shall be water-tight and leak-proof.

1.18 OPERATION AND MAINTENANCE MANUALS

A. The Contractor shall have prepared six (6) hardcopies and one (1) electronic copy of the Operation and Maintenance Manual and deliver these copies of the manual to the Owner. The manual shall be as specified herein. The manual must be approved and will not be accepted as final until so stamped.

B. The manual shall be bound in a three-ring loose-leaf binder similar to National No. 3881 with the following title lettered on the front: *Operation and Maintenance Manual – DTCC Owens Campus Carter Center Fume Hood Ventilation System - Electrical.* No sheets larger than 8-1/2 inches x 11 inches shall be used, except sheets that are neatly folded to 8-1/2 inches x 11 inches and used as a pull-out. Provide divider tabs and table of contents for organizing and separating information.

C. Provide the following data in the manual:

1. As first entry, an approved letter indicating the starting/ending time of Contractor's warranty period.

2. Maintenance operation and lubrication instructions on each piece of equipment furnished.

3. Complete catalog data on each piece of electrical equipment furnished including approved Shop Drawing/Submittal with Engineer's Comments (if any).

4. Manufacturer's extended limited warranties on equipment.

5. Provide sales and authorized service representatives names, address, and phone numbers of all equipment and subcontractors.

6. Provide supplier and subcontractor's names, address, and phone number.

7. Catalog data of all equipment, starters, etc. shall include wiring diagrams, parts list and assembly drawing.

8. Access panel charts with index illustrating the location and purpose of access panels.

9. Approved Electrical Inspection Certificates.

10. Start-up reports for equipment.

D. Submit Operation and Maintenance Manual prior to the anticipated date of Substantial Completion for Engineer review and approval. Substantial Completion requires that Operation and Maintenance Manuals be reviewed and approved.

E. Deliver all instruction materials to the Owner prior to the formal instruction period.

F. Upon completion of all work, thoroughly instruct the Owner's representatives in the proper operation and maintenance of all electrical equipment and systems.

G. Instructions shall be done only after completed systems have been put into operation and tested for proper operation and performance.

H. Instructions shall be given only by experts in the equipment or system and shall include descriptions and demonstrations of procedures of operation, data record keeping, etc.

I. Furnish the necessary technicians, skilled workers, and helpers to operate the electrical systems and equipment of the entire project for one (1) 8-hour day.

J. Where specified in technical sections, provide longer periods required for specialized equipment.

K. Instruct the Owner or designated personnel in operation, maintenance, lubrication, and adjustment of systems and equipment.

L. The Operation and Maintenance Manual shall be available at the time of the instructions, for use by Instructors and Owner personnel.

M. Schedule the general and specialized instruction periods for a time agreed upon by the Owner and Engineer.

1.19 INSTALLATION AND COORDINATION DRAWINGS

A. Prepare, submit and use composite installation and coordination drawings to assure proper coordination and installation of the work. Drawings shall include, but not be limited to the following:

1. Mechanical Rooms indicating transformers, panelboards, enclosures, boxes, conduits, mechanical equipment, ductwork, and piping, etc…

2. Electrical Rooms indicating switchboards, panelboards, enclosures, boxes, transformers, conduits, wireways, etc…

B. Draw plans to a scale not less than ¼ inch equals one foot. Include plans, sections and elevations of the proposed work, showing all equipment (mechanical, plumbing and electrical), conduit and wiring in the areas involved. Fully dimension all work, horizontally and vertically. Show coordination with other work including piping, ductwork and other mechanical work, walls, doors, ceilings, columns, beams, joists and other architectural and structural work.

C. Identify all equipment and devices on wiring diagrams. Where field connections are shown to factory-wired terminals, furnish manufacturer's literature showing internal wiring of equipment.

D. Prepare, submit, and use scaled layout drawings indicating dimensions, clearances, and actual equipment dimensions. Layout Drawings shall include, but not be limited to the following:

1. Building penetrations.

E. Prepare scaled coordination drawings in accordance with the Specifications. Indicate locations where space is limited for installation and access and where sequencing and coordination of installations are of importance to the efficient flow of the Work, including (but not necessarily limited to) the following:

1. Indicate the proposed locations of power, lighting, and all special system raceways, equipment, and materials. Include the following:

a. Working space and dedicated space clearances per the NEC.
b. Clearances for equipment disassembly required for periodic maintenance.
c. Exterior wall and foundation penetrations.
d. Fire-rated wall and floor penetrations.
e. Equipment connections and support details.

2. Indicate scheduling, sequencing, movement, and positioning of large equipment into the building during construction, including, but not limited to, the following: Major conduits and feeders.

3. Prepare floor plans, elevations, and details to indicate penetrations in floors, walls, and ceilings and their relationship to other penetrations and installations.

4. The successful Bidder shall be responsible for indicating all raceways described in notes or indicated by home run symbols.

5. The complete set of Mechanical and Electrical Drawings and Specifications apply to this work. The successful bidder shall familiarize himself with all other related documents to avoid possible demolition and installation conflicts.

PART 2 PRODUCTS

2.1 SLEEVES FOR RACEWAYS AND CABLES

A. Steel Pipe Sleeves: ASTM A 53/A 53M, Type E, Grade B, Schedule 40, galvanized steel, plain ends.

B. Cast-Iron Pipe Sleeves: Cast or fabricated "wall pipe," equivalent to ductile-iron pressure pipe, with plain ends and integral waterstop, unless otherwise indicated.

C. Sleeves for Rectangular Openings: Galvanized sheet steel.

1. Minimum Metal Thickness:

a. For sleeve cross-section rectangle perimeter less than 50 inches (1270 mm) and no side more than 16 inches (400 mm), thickness shall be 0.052 inch (1.3 mm).

b. For sleeve cross-section rectangle perimeter equal to, or more than, 50 inches (1270 mm) and 1 or more sides equal to, or more than, 16 inches (400 mm), thickness shall be 0.138 inch (3.5 mm).

2.2 GROUT

A. Nonmetallic, Shrinkage-Resistant Grout: ASTM C 1107, factory-packaged, nonmetallic aggregate grout, noncorrosive, nonstaining, mixed with water to consistency suitable for application and a 30-minute working time.

PART 3 EXECUTION

3.1 COMMON REQUIREMENTS FOR ELECTRICAL INSTALLATION

A. Comply with NECA 1.

B. Measure indicated mounting heights to bottom of unit for suspended items and to center of unit for wall-mounting items.

C. Headroom Maintenance: If mounting heights or other location criteria are not indicated, arrange and install components and equipment to provide maximum possible headroom consistent with these requirements.

D. Install equipment with working space and dedicated space in strict accordance with NEC Article 110.

E. Equipment: Install to facilitate service, maintenance, and repair or replacement of components of both electrical equipment and other nearby installations. Connect in such a way as to facilitate future disconnecting with minimum interference with other items in the vicinity.

F. Install equipment level and plumb, parallel and perpendicular to other building systems and components in exposed interior spaces, unless otherwise indicated.

G. Verify exact electrical requirements for each piece of equipment receiving one or more electrical connections, including but not limited to voltage, phase, and maximum fuse/overcurrent protection device rating. Provide electrical circuit of proper characteristics to serve provided equipment.

H. Include any and all items required by the National Electrical Code and/or field conditions for the proper connection and installation of each piece of equipment.

I. Make all connections to equipment in accordance with manufacturer's instructions.

J. Right of Way: Give to piping systems installed at a required slope.

K. Coordinate electrical work under other Divisions in accordance with Part 1 of this Section, Article "Electrical Work Under Other Divisions".

3.2 SLEEVE INSTALLATION FOR ELECTRICAL PENETRATIONS

A. Electrical penetrations occur when raceways, cables, wireways, cable trays, or busways penetrate concrete slabs, concrete or masonry walls, or fire-rated floor and wall assemblies.

B. Concrete Slabs and Walls: Install sleeves for penetrations unless core-drilled holes or formed openings are used.

C. Use pipe sleeves unless penetration arrangement requires rectangular sleeved opening.

D. Fire-Rated Assemblies: Install sleeves for penetrations of fire-rated floor and wall assemblies unless openings compatible with firestop system used are fabricated during construction of floor or wall.

E. Cut sleeves to length for mounting flush with both surfaces of walls.

F. Sleeves installed in floors shall extend 2 inches (50 mm) above finished floor level unless otherwise indicated on the Contract Drawings.

G. Size pipe sleeves to provide 1/4-inch (6.4-mm) annular clear space between sleeve and raceway or cable, unless indicated otherwise.

H. Seal space outside of sleeves with grout for penetrations of concrete and masonry

1. Promptly pack grout solidly between sleeve and wall so no voids remain. Tool exposed surfaces smooth; protect grout while curing.

I. Interior Penetrations of Non-Fire-Rated Walls and Floors: Seal annular space between sleeve and raceway or cable, using joint sealant appropriate for size, depth, and location of joint.

J. Fire-Rated-Assembly Penetrations: Maintain indicated fire rating of walls, partitions, ceilings, and floors at raceway and cable penetrations. Install sleeves and seal raceway and cable penetration sleeves with firestop materials. Comply with requirements of Division 26 Section “Electrical Firestopping”.

K. Roof-Penetration Sleeves: Seal penetration of individual raceways and cables with flexible boot-type flashing units applied in coordination with roofing work.

L. Aboveground, Exterior-Wall Penetrations: Seal penetrations using steel pipe sleeves and mechanical sleeve seals. Select sleeve size to allow for 1-inch (25-mm) annular clear space between pipe and sleeve for installing mechanical sleeve seals.

3.3 FIRESTOPPING

A. Apply firestopping to penetrations of fire-rated floor and wall assemblies for electrical installations to restore original fire-resistance rating of assembly. Firestopping materials and installation requirements are specified in Division 26 Section, "Electrical Firestopping".

3.4 SUPPORTS, HANGERS AND FOUNDATIONS

A. Provide supports, hangers, braces, attachments and foundations required for the work. Support and set the work in a thoroughly substantial and workmanlike manner without placing strains on

materials, equipment, or building structure, submit shop drawings for approval. Coordinate all work with the requirements of the structural division.

B. Supports, hangers, braces, and attachments shall be standard manufactured items or fabricated structural steel shapes. All interior hangers shall be galvanized or steel with rust inhibiting paint. All exterior hangers shall be constructed of stainless steel utilizing stainless steel rods, nuts, washers, bolts, etc.

C. Refer to Division 26 Section "Hangers and Supports" for additional requirements.

3.5 PROVISIONS FOR ACCESS

A. The Contractor shall provide access panels and doors for all concealed equipment, and other devices requiring maintenance, service, adjustment or manual operation.

B. Where access doors are necessary, furnish and install manufactured painted steel door assemblies consisting of hinged door, key locks, and frame designed for the particular wall or ceiling construction. Properly locate each door. Door sizes shall be a 12 inches x 12 inches for hand access, 18 inches x 18 inches for shoulder access and 24 inches x 24 inches for full body access where required. Review locations and sizes with Architect prior to fabrication. Provide U.L. approved and labeled access doors where installed in fire rated walls or ceilings. Doors shall be Milcor Metal Access Doors as manufactured by Inland-Ryerson, Mifab, or approved equal.

1. Acoustical or Cement Plaster: Style B

2. Hard Finish Plaster: Style K or L

3. Masonry or Dry Wall: Style M

C. Where access is by means of liftout ceiling tiles or panels, mark each ceiling grid using small color-coded and numbered tabs. Provide a chart or index for identification. Place markers within ceiling grid <u>not</u> on ceiling tiles.

D. Access panels, doors, etc. described herein shall be furnished under the section of Specifications providing the particular service and to be turned over to the pertinent trade for installation. Coordinate installation with installing Contractor. All access doors shall be painted in baked enamel finish to match ceiling or wall finish.

E. Submit shop drawings indicating the proposed location of all access panels/doors. Access doors in finished spaces shall be coordinated with air devices, lighting and sprinklers to provide a neat and symmetrical appearance.

F. Provide sufficient access and working space for repair and maintenance about all lighting and electrical equipment to permit ready and safe operation and maintenance of such equipment in accordance with OSHA 29 CFR 1910 Subpart D and 1910.303(g).

3.6 PAINTING AND FINISHES

A. Provide protective finishes on all materials and equipment. Use coated or corrosion-resistant materials, hardware and fittings throughout the work. Paint bare, untreated ferrous surfaces

with rust-inhibiting paint. All exterior components including supports, hangers, nuts, bolts, washers, vibration isolators, etc. shall be stainless steel.

B. Clean surfaces prior to application of insulation, adhesives, coatings, paint, or other finishes.

C. Provide factory-applied finishes where specified. Unless otherwise indicated factory-applied paints shall be baked enamel with proper pretreatment.

D. Protect all finishes and restore any finishes damaged as a result of work under Division 26 to their original condition.

E. The preceding requirements apply to all work, whether exposed or concealed, as defined herein.

F. Remove all construction marking and writing from exposed equipment, ductwork, piping and building surfaces. Do not paint manufacturer's labels or tags.

G. All exterior equipment and conduits shall be painted to match adjacent surface in color as selected by Owner.

H. All exposed conduit, boxes, equipment, etc. in finished spaces shall be painted. Colors shall be as selected by the Owner and conform to ANSI Standards.

3.7 COLOR SELECTION

A. Color of finishes shall be as selected by the Owner.

3.8 PROTECTION OF WORK

A. Protect work, material and equipment from weather and construction operations before and after installation. Properly store and handle all materials and equipment.

B. Cover temporary openings in conduits and equipment to prevent the entrance of water, dirt, debris, or other foreign matter. Deliver conduits with factory applied end caps.

C. Cover or otherwise protect all finishes.

D. Replace damaged materials, devices, finishes and equipment.

E. Protect stored conduits from moisture and dirt. Elevate above grade. Do not exceed structural capacity of floor, where stored inside.

3.9 OPERATION OF EQUIPMENT

A. Clean all systems and equipment prior to initial operation for testing, or other purposes. Lubricate, adjust, and test all equipment in accordance with manufacturer's instructions. Do not operate equipment unless all proper safety devices or controls are operational. Provide all maintenance and service for equipment that is authorized for operation during construction.

B. Where specified, or otherwise required, provide the services of the manufacturer's factory-trained servicemen or technicians to start up the equipment. Where factory start-up of equipment is not specified, provide field start-up by qualified technician.

C. Submit factory start-up sheets or field start-ups sheets for all equipment prior to the commencement of testing.

D. Upon completion of work, clean and restore all equipment to new conditions; replace expendable items.

3.10 TESTING AND ADJUSTMENT

A. Perform all tests which are specified or required to demonstrate that the work is installed and operating properly. Where formal tests are required, give proper notices and perform all necessary preliminary tests to assure that the work is complete and ready for final test.

B. Adjust all systems, equipment and controls to operate in a safe, efficient and stable manner.

C. On all circuits, 600 volts or less, provide circuits that are free from ground faults, short circuits and open circuits.

D. Other tests of a specific nature for special equipment shall be as specified under the respective equipment.

E. Submit all test results to the Engineer for approval.

3.11 WALL AND FLOOR PENETRATIONS

A. All penetrations of partitions, ceilings, roofs and floors under Division 26 shall be sleeved, sealed, and caulked as specified herein.

B. All penetrations of fire rated assemblies shall be sleeved, sealed, caulked and protected to maintain the rating of the wall, roof, or floor. Fire Marshal approved U.L. assemblies shall be utilized. See Division 26 Section, “Electrical Firestopping”.

C. Provide conduit escutcheons for all exposed conduit penetrations in finished interior spaces and all exposed exterior penetrations. Escutcheons shall match those provided under Division 23.

D. Conduit sleeves:

1. Galvanized steel pipe, standard weight where pipes are exposed and roofs and concrete and masonry walls. On exterior walls provide anchor flange welded to perimeter.

2. Twenty-two (22) gauge galvanized steel elsewhere.

3.12 EQUIPMENT BY OTHERS

A. This Contractor shall make all system connections required to equipment furnished and installed under other divisions or furnished by the Owner. Connections shall be complete in all respects to render this equipment functional to its fullest intent.

B. It shall be the responsibility of the supplier of the equipment to furnish complete instructions for connections. Failure to do so will not relieve the Contractor of any responsibility for improper equipment operation.

3.13 OUTAGES

A. Provide a minimum of five (5) days' notice to schedule outages. The Contractor shall include in their bid outages and/or work in occupied areas to occur on weekends, holidays, or at night. Coordinate and get approval of all outages with the Owner.

B. Submit *Outage Request Form*, attached at the end of this Section, to Owner for approval.

3.14 CUTTING AND PATCHING

A. Accomplish all cutting and patching necessary for the installation of work under Division 26. Damage resulting from this work to other work already in place, shall be repaired at Contractor's expense. Where cutting is required, perform work in neat and workmanlike manner. Restore disturbed work to match and blend with existing construction and finish, using materials compatible with the original. Use mechanics skilled in the particular trades required.

3.15 PENETRATION OF WATERPROOF CONSTRUCTION

A. Coordinate the work to minimize penetration of waterproof construction, including roofs, exterior walls, and interior waterproof construction. Where such penetrations are necessary, furnish and install all necessary curbs, sleeves, flashings, fittings and caulking to make penetrations absolutely watertight.

B. Where conduits penetrate roofs, flash pipe with Stoneman *Stormtite,* Pate or approved equal, roof flashing assemblies with skirt and caulked counter flashing sleeve.

C. Furnish and install pitch pockets or weather tight curb assemblies where required.

D. Furnish and install curbs and sleeves specifically designed for application to the particular roof construction, and install in accordance with the manufacturer's instructions. The Contractor shall be responsible for sleeve sizes and locations. All roof penetrations shall be installed in accordance with manufacturer's instructions, the National Roofing Contractors Association, SMACNA, and as required by other divisions of these Specifications.

3.16 CONCRETE AND MASONRY WORK

A. Furnish and install concrete and masonry work for equipment foundations, supports, pads, and other items required under Division 26. Perform work in accordance with requirements of Division 03 and other applicable Divisions of these Specifications.

B. Concrete shall achieve compressive strength not less than 3,000 psi after 28 days.

C. Grout shall be non-shrink, high strength mortar, free of iron of chlorides and suitable for use in contact with all metals, without caps or other protective finishes. Apply in accordance with manufacturer's instructions and standard grouting practices.

D. Properly align, level, and grout all equipment where necessary.

3.17 CONNECTIONS AND ALTERATIONS TO EXISTING WORK

A. Unless otherwise noted on the Drawings, where existing electrical work is removed, including hangers, to a point below finished floors or behind finished walls and capped, such point shall be far enough behind finished surfaces to allow for installation of normal thickness of required finish material.

B. Where work specified in Division 26 connects to existing equipment, conduits, etc., Contractor shall perform all necessary alterations, cuttings, fittings, etc., of existing work as may be necessary to make satisfactory connections between new and existing work, and to leave completed work in a finished and workmanlike condition.

C. Where the work specified under Division 26, or under other Divisions, requires relocation of existing equipment, conduit etc., Contractor shall perform all work and make necessary changes to existing work as may be required to leave completed work in a finished and workmanlike condition.

D. Where the relocation of existing equipment is required for access or the installation of new equipment, the Contractor shall temporarily remove and/or relocate and re-install as required to leave the existing and new work in a finished and workman like condition.

3.18 COORDINATION

A. Coordinate arrangement, mounting, and support of electrical equipment:

1. To allow maximum possible headroom unless specific mounting heights that reduce headroom are indicated.

2. To provide for ease of disconnecting the equipment with minimum interference to other installations.

3. To allow right of way for piping and conduit installed at required slope.

4. So connecting raceways, cables, wireways, cable trays, and busways will be clear of obstructions and of the working and access space of other equipment.

5. To provide working space and dedicated space clearances per NEC Article 110.26.

B. Coordinate installation of required supporting devices and set sleeves in cast-in-place concrete, masonry walls, and other structural components as they are constructed.

C. Coordinate location of access panels and doors for electrical items that are behind finished surfaces or otherwise concealed. Access doors and panels are specified in this Section.

D. Coordinate sleeve selection and application with selection and application of firestopping specified in Division 26 Section "Electrical Firestopping".

3.19 DEMOLITION

A. Unless otherwise noted all existing equipment, conduit, wire, etc., shall remain.

B. Where existing equipment is indicated to be removed, all associated conduit, power, controls, insulation, hangers, supports and housekeeping pads, etc…, shall also be removed. Patch, paint

and repair walls/roof/floor to match existing and/or new finishes.

C. The Contractor shall be responsible for visiting the site and determining the existing conditions in which the work is to be performed.

D. Where any abandoned conduits in existing floors, walls, ceilings, etc., conflict with new work, remove abandoned conduits as necessary to accommodate new work.

E. The location of all existing equipment, conduits etc., indicated is approximate only and shall be checked and verified. Provide all new electrical work required to connect to or clear existing work as applicable.

F. Maintain egress at all times. Coordinate egress requirements with the State Fire Marshal, the Owner and the Authority(ies) Having Jurisdiction (AHJ).

G. Where required to maintain the existing systems in operation, temporarily backfeed existing systems from new equipment. Contractor shall temporarily extend existing conduit systems to new conduit systems.

H. At completion of project all temporary conduit, wires, etc., shall be removed in their entirety.

I. Existing conduit, equipment, wiring, etc., not required for re-use or re-installation in this project, shall be removed from the project site.

J. Deliver to the Owner, on the premises where directed, existing equipment and materials which are removed and which are desired by the Owner or are indicated to remain the property of the Owner.

K. All other materials and equipment which are removed shall become property of the Contractor and shall be promptly removed, from the premises, and disposed of by the Contractor, in an approved manner. Contractor shall be responsible for proper disposal of all removed equipment containing PCB's.

L. Where conduit and wiring are removed, remove all conduit hangers which were supporting the removed conduit. Patch the remaining penetration voids with like materials and paint to match existing construction.

M. Where required, provide and coordinate removal and re-installation of existing equipment. Take care to protect materials and equipment indicated for reuse. Contractor shall repair or replace items which are damaged. Contractor shall have Owner's representative present to confirm condition of equipment prior to demolition.

N. Before demolition begins, and in the presence of the Owners representative, test and note all deficiencies in all existing systems affected by demolition but not completely removed by demolition. Provide a copy of the list of system deficiencies to the Owner and the Engineer.

O. The Owner shall have the first right of refusal for all fixtures, devices and equipment removed by the Contractor.

P. All devices and equipment designated by the Owner to remain the property of the Owner shall be moved and stored by the Contractor at a location on site as designated by the Owner. It shall

be the Contractor's responsibility to store all devices and equipment in a safe manner to prevent damage while stored.

Q. All existing equipment refused by the Owner shall become the property of the Contractor and shall be removed from the site by the Contractor in a timely manner and disposed of in a legal manner.

R. Work Abandoned in Place: Cut and remove conduit a minimum of 2 inches beyond face of adjacent construction. Cap and patch surface to match existing finish.

S. Temporary Disconnection: Remove, store, clean, reinstall, reconnect, and make operational equipment indicated for relocation.

T. Terminate services and utilities in accordance with local laws, ordinances, rules and regulations.

END OF SECTION

OUTAGE REQUEST FORM

DATE APPLIED: _____ BY: _____

DATE FOR OUTAGE: _____ FIRM: _____

START OUTAGE-TIME: _____ DATE:_____

END OUTAGE - TIME: _____ DATE:_____

AREAS AND ROOMS: _____

FLOOR(S): _____

AREA(S): _____

ROOM(S): _____

WORK TO BE PERFORMED: _____

SYSTEM(S): _____

REQUEST APPROVED BY: _____
(FOREMAN OR OTHER PERSON IN CHARGE)

(FOR OWNER'S USE ONLY):

APPROVED: _____

YES _____ NO ____ BY: _____DATE: _____

DATE/TIME-AS REQUESTED: _____ OTHER : _____

OWNER'S PRESENCE REQUIRED: _____

YES: ____ NO: ____ NAME: _____

POINT OF CONTACT: _____ PHONE: _____

DIVISION 26
SECTION 260519
CONDUCTORS AND CABLES
TABLE OF CONTENTS

PART 1 GENERAL

1.1 RELATED DOCUMENTS
1.2 SUMMARY
1.3 SUBMITTALS
1.4 QUALITY ASSURANCE
1.5 DELIVERY, STORAGE AND HANDLING
1.6 COORDINATION
1.7 PROJECT CONDITIONS

PART 2 PRODUCTS

2.1 MANUFACTURERS
2.2 BUILDING WIRES AND CABLES
2.3 CONNECTORS AND SPLICES
2.4 METAL CLAD (MC) CABLE AND CONNECTORS
2.5 INSULATING TAPE, PUTTY, RESIN AND SUPPORTS

PART 3 EXECUTION

3.1 EXAMINATION
3.2 PREPARATION
3.3 WIRE AND INSULATION APPLICATIONS
3.4 INSTALLATION
3.5 CONNECTIONS
3.6 IDENTIFICATION
3.7 FIELD QUALITY CONTROL

SECTION 260519 - CONDUCTORS AND CABLES

PART 1 GENERAL

1.1 RELATED DOCUMENTS

A. Drawings and general provisions of the Contract, including General and Supplementary Conditions and Division 01 Specification Sections, apply to this Section.

1.2 SUMMARY

A. This Section includes building wires and cables and associated connectors, splices, and terminations for wiring systems rated 600 V and less.

1.3 SUBMITTALS

A. Product Data: Provide for each cable assembly type, wire, cables, conductors, and connectors.

B. Project Record Documents: Record actual locations of components and circuits.

1.4 QUALITY ASSURANCE

A. Listing and Labeling: Provide wires and cables specified in this Section that are listed and labeled.

1. The Terms *Listed and Labeled*: As defined in NFPA 70, Article 100.

2. Listing and Labeling Agency Qualifications: A *Nationally Recognized Testing Laboratory* as defined in OSHA Regulation 1910.7.

B. Comply with NEMA/Insulated Cable Engineers Association (ICEA) Standards.

C. Comply with NECA Standard of Installation.

D. Comply with NETA ATS - Acceptance Testing Specifications for Electrical Power Distribution Equipment and Systems.

E. American Society for Testing and Materials (ASTM): Comply with requirements of the following:

1. B3: Standard Specification for Soft or Annealed Copper Wire

2. B8: Standard Specification for Concentric-Lay-Stranded Copper Conductors, Hard, Medium-Hard, or Soft

3. D753: Standard Specification for General Purpose Polychloroprene Jacket for Wire and Cable

F. Electrical Testing Laboratories (ETL): Provide wiring, cabling and connector products which are ETL listed and labeled.

G. Institute of Electrical and Electronics Engineers (IEEE): Comply with the following standards which apply to wiring systems:

1. 82: Test procedure for Impulse Voltage Tests on Insulated Conductors

2. 241: Recommended Practice for Electric Power Systems in Commercial Buildings

H. NFPA: Comply with NFPA 70 requirements for construction, installation and color coding of electrical wire, cable and connections.

I. National Electrical Manufacturer's Association (NEMA): Comply with requirements of the following:

1. WC70: Power Cables Rated 2000 Volts or Less for the Distribution of Electrical Energy.

J. UL: Provide material conforming to the following standards:

1. UL 83 - Thermoplastic-Insulated Wires and Cables.

2. UL 486A - Wire Connectors and Soldering Lugs for Use with Copper Conductors

K. UL Labels: Provide wiring, cabling and connector products which are UL listed and labeled.

1.5 DELIVERY, STORAGE, AND HANDLING

A. Deliver wires and cables according to NEMA WC 26, *Binational Wire and Cable Packaging Standard*.

B. Storage: Store wire and cable in a clean dry space in original containers. Protect products from weather, damaging fumes, construction debris and traffic.

C. Handling: Handle wire and cable carefully to avoid abrading, puncturing and tearing wire and cable insulation and sheathing. Ensure that dielectric resistance integrity of wires/cables is maintained.

1.6 COORDINATION

A. Coordinate layout and installation of cables with other installations.

B. Revise locations and elevations from those indicated, as required to suit field conditions and as approved by Engineer.

C. Determine required separation between cables and other work.

D. Determine cable routing to avoid interference with other work.

1.7 PROJECT CONDITIONS

A. Verify that field measurements are as shown on the Drawings.

B. Conductor sizes are based on copper.

C. Wire and cable routing shown on Drawings is approximate unless dimensioned. Route wire and cable as required to meet Project Conditions.

D. Where wire and cable routing is not shown, and destination only is indicated, determine exact routing and lengths required.

PART 2 PRODUCTS

2.1 MANUFACTURERS

A. Available Manufacturers: Subject to compliance with requirements, manufacturers offering products that may be incorporated into the Work include, but are not limited to, the following:

1. Wires and Cables:

a. American Insulated Wire Corp.
b. BICC Brand-Rex Company.
c. General Cable.
d. Senator Wire & Cable Company.
e. Southwire Company.
f. Colonial Wire Company.

2. Connectors and Accessories for Wires and Cables:

a. AMP Incorporated.
b. Buchanan.
c. General Signal; O-Z/Gedney Unit.
d. Monogram Company; AFC.
e. NSI Industries, Inc.
f. Square D Company; Anderson.
g. 3M Company; Electrical Products Division.

3. Metal Clad (MC) Cable

a. Alcan Cable.
b. Atkore AFC Cable Systems.
c. Encore Wire Corporation.
d. General Cable.
e. Nexans.
f. Prysmian Cables and Systems.
g. Service Wire Company.
h. Southwire Company.
i. United Copper Industries.

2.2 BUILDING WIRES AND CABLES

A. UL-listed building wires and cables with conductor material, insulation type, cable construction and rating as specified herein.

B. Building wires and cables shall be annealed (soft) copper, 600 volt, Type THHN/THWN (dual-rated) single conductors rated 90°C dry / 75°C wet, with a minimum conductivity of 98 percent at 20°C (68°F), or a maximum resistivity of 1.7 micro-ohms per centimeter.

C. Conductors shall meet or exceed requirements of all applicable ASTM specifications, UL Standard 83, UL Standard 1581, NEMA WC 70, Federal Specification A-A-59544 and shall be RoHS/REACH Compliant.

D. Conductors shall be solid for 10 AWG and smaller, and stranded for 8 AWG and larger.

E. Building wire and cables shall be color-coded using colors factory impregnated throughout the insulation and jacket. The following color code convention(s) shall be used except where existing systems have established another color code convention:

1. 120/208-Volt, 3-Phase, 4-Wire System:

a.	Phase A:	Black
b.	Phase B:	Red
c.	Phase C:	Blue
d.	Neutral:	White
e.	Ground:	Green

2. 277/480-Volt, 3-Phase, 4-Wire System:

a.	Phase A:	Brown
b.	Phase B:	Orange
c.	Phase C:	Yellow
d.	Neutral:	Gray
e.	Ground:	Green

2.3 CONNECTORS AND SPLICES

A. UL-listed, factory-fabricated wiring connectors of size, ampacity rating, material, type, and class for application and service indicated. Comply with Project's installation requirements and as specified in Part 3 Article, "*Wire and Insulation Applications*".

B. Split Bolt Connectors: Not acceptable.

C. Solderless Pressure Connectors: High copper alloy terminal. May be used only for cable termination to equipment pads or terminals. Not approved for splicing.

D. Spring Wire Connectors: Not acceptable.

E. Mechanical Connectors: Bolted type tin-plated; high conductivity copper alloy; spacer between conductors; beveled cable entrances.

F. Compression (crimp) Connectors: Long barrel; seamless, tin-plated electrolytic high conductivity copper tubing, internally beveled barrel ends. Connector shall be clearly marked with the wire size and type and proper number and location of crimps.

G. Heat shrinkable tubing shall meet the requirements of ANSI C119.1-1986 for buried connections to 90 degrees C and shall be material flame-retarded per IEEE 383 *Vertical Tray Flame Test*.

H. Motor connection kits shall consist of heat-shrinkable, polymeric insulating material over the connection area and a high dielectric strength mastic to seal the ends against ingress of moisture and contamination. Motor connection kits shall accommodate a range of cable sizes for both in-line and stub-type configurations. Connection kits shall be independent of cable manufacturer's tolerances.

I. Wire Nut Connectors:

1. Description: Twist-on wire connectors for branch circuit conductors 8 AWG and smaller with a color-coded housing.

2. Construction: Flame-retardant polypropylene housing, rated for 105 degrees Celsius. Zinc-plated steel insert. Square-wire spring to maintain secure positive grip that will not relax over time, no pre-twisting required.

3. Dimensions: Connectors shall be appropriately sized according to manufacturer’s recommendation for the suitable wire sizes and voltage rating (600 volts minimum).

4. Quality Assurance:

   a. UL Listed to 486C and 94V-2 Flame Rating.
   b. CSA Certified to C22.2 No. 188
   c. RoHS Compliant

5. Special Features:

   a. Wire connectors for making grounding connections shall have green-colored housing and shall have opening at end of connector for grounding conductor to pass through for connection to metallic outlet boxes.
   b. Wire connectors for all exterior and underground work and work in damp/wet interior locations shall be pre-filled with silicone-based sealant to protect against moisture and corrosion, and shall be UL Listed to 486D for use in damp/wet locations, including direct burial applications.

6. Basis of Design: Provide products by Ideal Industries, Inc. or approved equal.

J. Insulated Connectors (for Conductors 8 AWG and Larger in Dry Locations)

1. Description: Multi-conductor connectors for low voltage (600V or less) circuits, insulated with high-dielectric strength plastisol, molded for precise fit and supplied with removable access plugs over the hex screws.

2. Construction: Range-taking mechanical connector made of aluminum accepts both aluminum and copper conductors. Molded cover of UV stable, impact resistant polypropylene provides rugged protection. Mounting holes at each end of the connector for direct isolated mounting to wiring trough, panelboard, or wireway.

3. Dimensions: Splices and connectors shall be appropriately sized according to manufacturer's recommendation for the suitable wire sizes, quantities, and voltage rating.

4. Quality Assurance: UL listed. UV resistant.

5. Special Features: Connectors shall be rated for temperatures from -45 degrees Celsius to 90 degrees Celsius.

6. Basis of Design: IPLM/IPLMD Series as manufactured by Polaris, or approved equal.

K. Gel Filled Insulated Connectors (for Conductors 8 AWG and Larger in Damp/Wet Locations)

1. Description: Multi-conductor connectors for low voltage (1,000V or less) circuits, insulated with high-dielectric strength plastisol, molded for precise fit and supplied with removable access plugs over the hex screws. Gel-filled for damp/wet or submersed locations to protect connections from moisture ingress and corrosion.

2. Construction: Range-taking mechanical connector made of tin-plated aluminum accepts both aluminum and copper conductors. Molded cover of UV stable, impact resistant polypropylene provides rugged protection. Cable entry ports and hinged screw port caps shall be sealed with hydrophobic dielectric gel insulation.

3. Dimensions: Splices and connectors shall be appropriately sized according to manufacturer's recommendation for the suitable wire sizes, quantities, and voltage rating.

4. Quality Assurance: ANSI C119.1 for complete unit, ANSI C119.4 for connector, ASTM D543 for chemical resistance, ASTM G-53-95 and ASTM D-638-95 for UV resistance.

5. Special Features: Silicone gel shall be easily removed from conductor for re-entry. Connectors shall be rated for temperatures from -40 degrees Celsius to 95 degrees Celsius.

6. Basis of Design: GPRT Series as manufactured by Raychem/Tyco, or approved equal.

2.4 METAL CLAD (MC) CABLE AND CONNECTORS

A. Cable shall meet or exceed the requirements of UL Standard 83, UL Standard 1063, and UL Standard 1569 for Type MC cable, Federal Specification A-A59544 Vertical Cable Tray Flame Test and the National Electrical Code. Cable shall be listed for use in UL 1, 2, and 3 Hour Through-Penetration Firestop Systems.

B. Cable shall be constructed with soft drawn copper, 600 volt, type THHN/THWN conductors rated 90°C dry/75°C wet, with a green insulated grounding conductor. Conductors shall be cabled together with a binder tape bearing a print legend that is wrapped around the assembly. An aluminum interlocked armor shall be applied over the assembly. Conductors shall be protected by an anti-short bushing at each termination.

C. Only cables with conductor sizes 12 AWG and 10 AWG shall be permitted.

D. Multi-circuit MC cable is not permitted.

E. Straight connectors shall be one-piece spring-steel, set screw design with nylon insulator. Provide ACB series, as manufactured by Crouse-Hinds, or approved equal.

F. 45 and 90 degree connectors shall be die cast zinc, clamp type with insulated throat. Provide ACBXX45 or ACBXX90 series as manufactured by Crouse-Hinds, or approved equal.

G. Cables shall be supported with appropriate hangers; tie wire will not be accepted.

2.5 INSULATING TAPE, PUTTY, RESIN AND SUPPORTS

A. Tape: Provide plastic electrical insulating tape which is flame-retardant, cold and weather-resistant. Tape for use in areas subject to temperatures 30 degrees C to 105 degrees C, or where the tape will be subjected to an oil splash, tape shall have a minimum thickness of 8.5 mils, and shall consist of an oil-resistant acrylic adhesive.

B. Materials: Provide all insulating materials for splices and connections such as glass and synthetic tapes, putties, resins, splice cases, or compositions of the type approved for the particular use, location, voltage and temperature and apply and install in an approved manner, all in accordance with the manufacturer's recommendations.

C. Supports: Provide cable supports of the wedge type which firmly clamp each individual cable and tighten due to the cable weight.

PART 3 EXECUTION

3.1 EXAMINATION

A. Examine raceways and building finishes to receive wires and cables for compliance with requirements for installation tolerances and other conditions affecting performance of wires and cables. Do not proceed with installation until unsatisfactory conditions have been corrected.

B. By beginning work, the Contractor has accepted conditions and assumes responsibility for correcting unsuitable conditions encountered at no additional cost to the Owner.

3.2 PREPARATION

A. Completely and thoroughly swab raceway before installing wire.

3.3 WIRE AND INSULATION APPLICATIONS

A. No branch circuit wires smaller than 12 AWG shall be used unless otherwise indicated. Conductors shall be continuous from outlet to outlet and from terminal board to point of final connection, and no splice shall be made except within outlet or junction boxes. All conductors shall be of the size indicated. All wires 8 AWG and larger shall be stranded.

B. Control wiring shall not be less than 14 AWG and shall be color coded using colors impregnated into the insulation. All control wiring shall be color coded with wires of colors different from those used to designate phase wires.

C. All wiring, contacts, and terminal blocks shall be suitably tagged for ease in identification and tracing of circuits. Identification tags shall be engraved fiber or plastic type, subject to acceptance. Wires shall be numbered and coded, using Brady *Quicklabels*, or equal.

D. Wiring shall be tagged at terminations, in pull boxes, junction boxes, outlet boxes, panelboards, etc…

E. Switch leg wire shall be labeled with "*S*" tag.

F. Wiring for general 15 and 20 amp branch circuit work shall be as follows unless otherwise indicated:

HOME RUN LENGTH AND WIRE SIZE				CIRCUIT LENGTH AND WIRE SIZE			
120 Volt		277 Volt		120 Volt		277 Volt	
0 – 60 '	12AWG	0 – 175 '	12AWG	0-100 '	12AWG	0 – 200 '	12AWG
60 – 100 '	10AWG	175 - 350'	10AWG	100' & Up	10AWG	200 ' & Up	10AWG
100' & Up	8AWG	350> & Up	8AWG				

G. Circuit length as given above shall be the wire length between the first and last outlet on the circuit. Home run length as given above shall be the wire length between the first outlet and the panelboard. In accordance with the above, where the size of branch circuit conductors is increased by the minimum required by the NEC for the branch circuit rating, ensure that the termination provisions of all equipment connected to such circuits are listed as suitable for the conductor sizes involved.

H. Joints of 10 AWG and smaller shall be made with properly insulated solderless type pressure connectors. Where stranded conductors or multiple solid conductors are connected to

terminals, solderless lugs manufactured by Thomas and Betts Company or equivalent shall be used.

I. Joints of 8 AWG and larger shall be of the type indented into the conductor by means of a hand or hydraulic pressure tool. Connectors shall be Burndy *Hy-dent*, T&B *Sta-Kon*, or equivalent. Connectors for control wiring shall be Burndy *Hy-Lug*, or equivalent.

J. MC cable shall be permitted only where concealed above accessible ceilings and/or within drywall partitions and in accordance with the requirements of Division 26 Section "Raceways and Boxes".

3.4 INSTALLATION

A. Install wires and cables as indicated, according to manufacturer's written instructions and NECA's *Standard of Installation*.

B. Pull Conductors: Use a UL-listed and manufacturer-approved pulling compound or lubricant where necessary; compound used must not deteriorate conductor or insulation. Do not exceed manufacturer's recommended maximum pulling tensions and sidewall pressure values.

C. Use pulling means including fish tape, cable, rope, and basket-weave wire/cable grips that will not damage cables or raceway. Completely and thoroughly swab conduit system before installing conductors.

D. Install exposed cables, parallel and perpendicular to surfaces of exposed structural members, and follow surface contours where possible.

E. Support cables according to Division 26 Section, "Common Work Results for Electrical" and Division 26 Section, "Hangers and Supports".

F. Seal around cables penetrating fire-rated elements according to Division 26 Section, "Electrical Firestopping".

G. Identify wires and cables according to Division 26 Section, "Electrical Identification".

H. Conductors installed in parallel shall be of equal lengths.

I. Wiring at Outlets: Install with at least 6 inches (150 mm) of slack conductor at each outlet in accordance with Article 300.14 of the National Electrical Code.

J. Connect outlets and components to wiring and to ground as indicated and instructed by manufacturer. Tighten connectors and terminals, including screws and bolts, according to equipment manufacturer's published torque-tightening values for equipment connectors. Where manufacturer's requirements are not indicated, tighten connectors and terminals according to tightening torques specified in UL Standard 486A.

K. The Contractor shall provide suitable installation equipment to prevent cutting and abrasion of conductor insulation. The Contractor shall use suitable cable guides, pulleys, and protective sleeving to prevent damage to cable during installation. Ropes used for pulling of

wire and cable shall be made of polyethylene or other suitable non-metallic material. Pulling lines shall be attached to cable by means of either woven basket grips or pulling types attached directly to the conductors. Wire pulling lubricants, if used, shall conform to UL requirements applicable to the various insulations and raceway materials. The lubricants shall be certified by the manufacturer to be non-injurious to such insulation and materials.

L. Each cable shall be labeled at terminals and at all accessible points in equipment and in pull boxes. Each wire shall be labeled at both ends. Labels shall be self-sticking wire markers.

M. For rubber and plastic-covered wire and cable, pulling compound Ideal Yellow 77 may be used.

N. Terminal lugs for wires 8 AWG and larger shall be T&B 54,000 Series or Burndy *HY-Dent*, compression type, unless noted otherwise. One-hole lugs for wires 4/0 AWG and smaller. Two-hole lugs for all wires 250 kcmil AWG and larger.

O. Install wires and cables using braided rope larger than the cable being pulled to keep twists to a minimum.

P. Provide an insulated green equipment grounding conductor (EGC), sized per NEC, for all feeder and branch circuits, shown or not shown.

Q. Multi-wire branch circuits shall not be permitted. Provide a separate insulated neutral (grounded) conductor for all feeder and branch circuits requiring a neutral connection.

R. Install electrical cables, wires, and connectors as indicated in compliance with manufacturer's written instructions, applicable requirements of NEC and NECA's "Standard of Installation", and in accordance with recognized industry practices.

S. Coordinate cable and wire installation work with electrical raceway and equipment installation work, as necessary for proper interface.

T. Conductors installed in runs within 6 inches of heating pipes or equipment shall be of types required by the NEC and shall be listed for the application.

U. No conductors shall be drawn into conduit until all work, which may cause cable damage, is completed.

V. All wiring over boilers and breechings, and in other high ambient temperature areas, shall be of types required by NEC and shall be listed for the application.

W. During installation, do not deform cable by improper bending, stretching, twisting, kinking, or pinching, nor do any other abusive handling. Any failure to observe these instructions will be detected and corrected during the demonstrations following completion of the installation.

X. All cable runs shall contain *S* loops or other means to accommodate expansion or contraction as required.

Y. Cable bends will have a radius not less than the value recommended by the cable manufacturer.

Z. Cables connected to electronic equipment in the system shall be tagged to show its function and the location of its other end.

AA. All labels shall be of durable material and securely fastened to the cable.

BB. Wiring of different system voltages shall not be mixed at pull boxes enclosures, surface metal raceway, wiretrough, etc., unless a barrier (separator) is provided between the differing systems.

3.5 CONNECTIONS

A. Conductor Splices: Keep to minimum.

B. Install splices and taps that possess equivalent or better mechanical strength and insulation ratings than conductors being spliced.

C. Use splice and tap connectors compatible with conductor material.

D. Connect outlets and components to wiring and to ground as indicated and instructed by manufacturer.

E. Tighten electrical connectors and terminals according to manufacturer's published torque-tightening values. If manufacturer's torque values are not indicated, use those specified in UL 486A and UL 486B.

F. Wire splices and taps shall be adequate to carry full current rating of wire.

G. Conductors shall be continuous from outlet to outlet, and no splices shall be made except within outlet or junction boxes. Junction boxes may be utilized where required. Wire connectors of insulating material or solderless pressure connections, properly taped, shall be utilized for all splices in wiring.

H. Splices in branch circuits and feeders shall be made where indicated or as required for the installation. All splices shall be accessible and made in enclosure approved for that purpose.

I. For splices in branch circuits provide connectors as follows;

1. Wire Sizes 10 AWG and smaller: Provide wire nut connectors as specified in Part 2 of this Section.

2. Wire Sizes 8 AWG and Larger: Provide insulated connectors securely fastened to enclosure as specified in Part 2 of this Section.

J. Thoroughly clean wiring prior to installing lugs or connectors.

3.6 IDENTIFICATION

A. All building wire and cable shall be color-coded to identify the electrical system(s) as specified. Where color-coding is field-applied, the same shall be accomplished with colored electrical tape wrapped concentrically around each conductor in half-lapped turns, for at least the last six (6) inches of the conductor. One turn around the conductor is not acceptable.

B. Identify wire and cable using Thomas and Betts Type WM vinyl markers.

C. Identify each phase and neutral conductor with its circuit number or other designation indicated on the Drawings in all junction, pull, terminal boxes, and cabinets.

D. Provide identification tags on each conductor entering each panelboard, switch, junction box, and pull box to identify conductor.

E. Comply with the requirements of Division 26 Section, *Electrical Identification.*

F. Feeder Identification: Securely fasten nonferrous identifying tags or pressure-sensitive labels to all cables, feeders, and power circuits in pull boxes, panelboards, and at termination of cables.

1. Tags or labels shall be stamped or printed to correspond with markings on Contract Drawings or marked so that feeder or cable may be readily identified.

3.7 FIELD QUALITY CONTROL

A. Visual and Mechanical Inspection:

1. Inspect for defects and physical damage, labeling, and compliance with requirements of drawings and schedules.

2. Clean conductors using Manufacturer’s approved methods and materials.

3. Verify that conductors are correct size and are terminated with appropriately sized lugs.

4. Verify that conductors are correct color for phase identification.

5. Verify that conductors are labeled to identify circuit designation.

6. Verify that neutral conductors are only terminated at neutral lugs/bus, and that grounding conductors are only terminated at grounding lugs/bus.

B. Electrical Tests: Upon installation of conductors and before electrical circuitry has been energized, provide the following minimum inspections and tests according to manufacturer's written instructions to ensure conductors are operational within industry and manufacturer's tolerances, are installed according to the Contract Documents, and are suitable for energizing.

1. Inspect accessible components for cleanliness, mechanical and electrical integrity, and damage or deterioration.

2. Inspect bolted electrical connections for tightness according to manufacturer's published torque values or, if not available, those specified in UL 486A and UL 486B.

3. Verify continuity of each conductor.

4. Perform each visual and mechanical inspection and electrical test stated in NETA ATS, Section 7.3.2.

C. Demonstration: Subsequent to conductor and cable hook-ups, energize circuits and demonstrate compliance with requirements. Where necessary, correct malfunctioning units and then re-test to demonstrate compliance.

END OF SECTION

DIVISION 26
SECTION 260520
ELECTRIC HEATING CABLES
TABLE OF CONTENTS

PART 1 GENERAL

1.1 RELATED DOCUMENTS
1.2 SUMMARY
1.3 DEFINITIONS
1.4 SUBMITTALS
1.5 QUALITY ASSURANCE
1.6 COORDINATION
1.7 WARRANTY

PART 2 PRODUCTS

2.1 MANUFACTURERS
2.2 ELECTRICAL HEAT TRACING FOR PIPELINES
2.3 CONTROLS
2.4 ACCESSORIES

PART 3 EXECUTION

3.1 EXAMINATION
3.2 INSTALLATION
3.3 CONNECTIONS
3.4 FIELD QUALITY CONTROL
3.5 ADJUSTING
3.6 PROTECTION

SECTION 260520 - ELECTRIC HEATING CABLES

PART 1 GENERAL

1.1 RELATED DOCUMENTS

A. Drawings and general provisions of the Contract, including General and Supplementary Conditions and Division 01 Specification Sections, apply to this Section.

1.2 SUMMARY

A. This Section includes heating cables for the following applications:

1. Heat tracing for freeze protection.

1.3 DEFINITIONS

A. AWG: American Wire Gauge.

B. C: Celsius.

C. F: Fahrenheit.

1.4 SUBMITTALS

A. Product Data: For each type of product indicated.

B. Field Test Reports: Indicate and interpret test results for compliance with performance requirements.

C. Maintenance Data: For electric heating cables to include in maintenance manuals specified in Division 01.

D. Warranties: Special warranties specified in this Section.

1.5 QUALITY ASSURANCE

A. Electrical Components, Devices, and Accessories: Listed and labeled as defined in NFPA 70, Article 100, by a testing agency acceptable to authorities having jurisdiction, and marked for intended use.

1.6 COORDINATION

A. Coordinate layout and installation of electric heating cables and system components with other construction.

1. Coordinate with piping installer, for condensate piping provided under Division 23.

1.7 WARRANTY

A. General Warranty: Special warranty specified in this Article shall not deprive Owner of other rights Owner may have under other provisions of the Contract Documents and shall be in addition to, and run concurrent with, other warranties made by Contractor under requirements of the Contract Documents.

B. Special Warranty: Written warranty, executed by manufacturer agreeing to repair or replace components of electric heating cables that fail in materials or workmanship within specified warranty period.

C. Warranty Period: Two years from date of Substantial Completion.

PART 2 PRODUCTS

2.1 MANUFACTURERS

A. Available Manufacturers: Subject to compliance with requirements, manufacturers offering products that may be incorporated into the Work include, but are not limited to, the following:

1. Accutron Heat Tracing Systems.

2. Ari Industries.

3. BICC Pyrotenax USA Inc.

4. Caloric, Inc.

5. Chromalox; Wiegard Industrial Division; Emerson Electric Company.

6. Copperheat Inc.

7. Delta-Therm Corp.

8. Easy Heat, Inc.

9. INDEECO.

10. Maxxon Corp.; Infloor Heating Systems Div.

11. Nelson Heat Tracing Systems.

12. Omega Engineering Inc.

13. Raychem Corporation.

14. Thermon Manufacturing Co.

2.2 ELECTRICAL HEAT TRACING FOR PIPELINES

A. The self-regulating heater shall consist of two (2) 16 AWG nickel coated-copper bus wires embedded in parallel in a self-regulating polymer core that varies its power output to respond to temperature all along its length, allowing the heater to be crossed over itself without overheating, to be used directly on plastic pipe, and to be cut to length in the field. The heater shall be covered by a radiation cross-linked modified polyolefin dielectric jacket.

B. In order to provide energy conservation and to prevent overheating, the heater shall have a self-regulating factor of at least 90 percent. The self-regulation factor is defined as the percentage reduction, without thermostatic control, of the heater output going from 40 degrees F pipe temperature operation to 150 degrees F pipe temperature operation.

C. The heater shall operate on line voltages of 120 volts without the use of transformers.

D. The heater shall be sized according to this table. The required heater output rating is in watts per foot at 50 degrees F.

Pipe Size	**Watts per foot**
3 inch or less	5 watt
4 inch	5 watt
6 inch	8 watt
8 inch	2 strips - 5 watt
12 inch to 14 inch	2 strips - 8 watt

E. Power connection, end seal, splice and tee kit components shall be applied in the field.

F. The system shall be controlled by a thermostat set at 40 degrees F either directly or through an appropriate contactor.

2.3 CONTROLS

A. Outdoor Thermostat: Remote bulb unit with adjustable temperature range from 0 to 120 degrees F (minus 17 to plus 50 degrees C) snap action; open-on-rise, single-pole switch with 25-A rating.

1. Outdoor thermostat shall be set to 40 degrees Fahrenheit.

2.4 ACCESSORIES

A. Cable Installation Accessories: Tapes, cable ties, warning labels, end seals and splices, and installation clips.

PART 3 EXECUTION

3.1 EXAMINATION

A. Examine surfaces and substrates to receive heating cables for compliance with requirements for installation, tolerances, and other conditions affecting performance.

1. Ensure surfaces and pipes in contact with electric heating cables are free of burrs and sharp protrusions.

2. Ensure pipe testing is complete.

3. Ensure surfaces and substrates are level and plumb.

B. Test cables for electrical continuity before installing.

C. Test cables for insulation resistance before installing.

D. Proceed with installation only after unsatisfactory conditions have been corrected.

3.2 INSTALLATION

A. Cut cable(s) to lengths required.

B. Install heater-to-cold lead connections in accessible locations. Do not embed in concrete or plaster.

C. Avoid crossing expansion, construction, or control joints with heating cables. Provide sufficient slack conductor in expansion loop.

D. Provide labels for piping insulation/jacketing to identify the same as “electrically heat-traced”.

3.3 CONNECTIONS

A. Electrical installation requirements are specified in other Division 26 Sections. Drawings indicate general arrangement of wiring, conduit, and specialties.

B. Connect heating cables and other components to wiring systems.

C. Ground equipment:

1. Tighten electrical connectors and terminals according to manufacturer's published torque-tightening values. If manufacturer's torque values are not indicated, use those specified in UL 486A and UL 486B.

3.4 FIELD QUALITY CONTROL

A. Testing: Perform tests after installation but before application of coverings, such as insulation, plaster, or concrete.

1. Test cables for electrical continuity before energizing.

2. Test cables for insulation resistance before energizing. Remove cables if measured resistance is less than 10 megohms to ground.

3. Test cables to verify rating and power input. Energize and measure voltage and current simultaneously.

B. Repeat tests for continuity, insulation resistance, and input power after applying thermal insulation.

C. Repair or replace malfunctioning units. Retest as specified above after repairs or replacements are made.

3.5 ADJUSTING

A. Set field-adjustable thermostat ranges as indicated.

3.6 PROTECTION

A. Protect installed heating cables, including leads, from damage prior to Substantial Completion.

END OF SECTION

DIVISION 26
SECTION 260526
GROUNDING AND BONDING
TABLE OF CONTENTS

PART 1 GENERAL

1.1 RELATED DOCUMENTS
1.2 SUMMARY
1.3 DEFINITIONS
1.4 SUBMITTALS
1.5 QUALITY ASSURANCE

PART 2 PRODUCTS

2.1 MANUFACTURERS
2.2 GROUNDING AND BONDING PRODUCTS
2.3 WIRE AND CABLE GROUNDING CONDUCTORS
2.4 CONNECTOR PRODUCTS

PART 3 EXECUTION

3.1 APPLICATION
3.2 INSTALLATION
3.3 CONNECTIONS

SECTION 260526– GROUNDING AND BONDING

PART 1 GENERAL

1.1 RELATED DOCUMENTS

A. Drawings and general provisions of the Contract, including General and Supplementary Conditions and Division 01 Specification Sections, apply to this Section.

B. Refer to Division 26 Section "Conductors and Cables" for conductor and cable requirements.

1.2 SUMMARY

A. This Section includes grounding of electrical systems and equipment and basic requirements for grounding for protection of life, equipment, circuits, and systems. Grounding requirements specified in this Section may be supplemented in other Sections of these Specifications.

B. Bond together system neutrals; service equipment enclosures; exposed non-current carrying metal parts of electrical equipment; metal raceway systems; grounding conductor in raceways; receptacle ground connectors; and plumbing systems.

1.3 DEFINITIONS

A. EGC: Equipment grounding conductor.

B. GEC: Grounding electrode conductor.

C. SSBJ: Supply-side bonding jumper.

1.4 SUBMITTALS

A. General: Submit each item in this Article according to the Conditions of the Contract and Division 01 Specification Sections.

B. Product Data for grounding rods, conductors, connectors and connection materials, and grounding fittings. Submit ground system manufacturer's recommended installation procedure for review.

C. Field tests and observation reports indicating and interpreting the test reports for compliance with performance requirements.

1.5 QUALITY ASSURANCE

A. Comply with NFPA 70 - National Electrical Code.

B. Comply with UL 467 - UL Standard for Safety Grounding and Bonding Equipment.

C. Comply with ANSI/IEEE C2 - National Electrical Safety Code.

D. Comply with ANSI/IEEE 32 - Requirements, terms and test procedures for neutral grounding devices.

E. Comply with IEEE Standard 142 - Recommended Practice for Grounding of Industrial and Commercial Power Systems.

F. Comply with ANSI C33.8.

G. Listing and Labeling: Provide products specified in this Section that are listed and labeled.

1. The Terms *Listed* and *Labeled*: As defined in the National Electrical Code, Article 100.

2. Listing and Labeling Agency Qualifications: A *Nationally Recognized Testing Laboratory* (NRTL) as defined in OSHA Regulation 1910.7.

PART 2 PRODUCTS

2.1 MANUFACTURERS

A. Available Manufacturers: Subject to compliance with requirements, manufacturers offering products that may be incorporated into the Work include, but are not limited to, the following:

1. Erico Inc.; Electrical Products Group.

2. Harger Lightning and Grounding; Harger, Inc.

3. Heary Brothers Lightning Protection Co.

4. Ideal Industries, Inc.

5. ILSCO.

6. O-Z/Gedney Co.

7. Raco, Inc.

8. Thomas & Betts, Electrical.

2.2 GROUNDING AND BONDING PRODUCTS

A. Governing Requirements: Where types, sizes, ratings, and quantities indicated are in excess of National Electrical Code (NEC) requirements, the more stringent requirements and the greater size, rating, and quantity indications govern.

2.3 WIRE AND CABLE GROUNDING CONDUCTORS

A. Comply with Division 26, Section “Conductors and Cables”. Conform to NEC Table 8, except as otherwise indicated, for conductor properties, including stranding.

B. Equipment Grounding Conductors: Size as indicated on the Drawings, or as required by National Electrical Code (NEC) Table 250-122, whichever is larger. Insulated with green color insulation.

C. Grounding Electrode Conductors: Size as indicated on the Drawings, in the Specifications, or as required by National Electrical Code (NEC) Table 250-66, whichever is larger. Insulated with green color insulation, unless installed in direct contact with earth, in which case conductors shall be bare.

D. Bare Copper Conductors: Conform to the following:

1. Solid Conductors: ASTM B 3.

2. Assembly of Stranded Conductors: ASTM B 8.

3. Tinned Conductors: ASTM B 33.

2.4 CONNECTOR PRODUCTS

A. Mechanical Connectors

1. The mechanical connector bodies shall be manufactured from high strength, high conductivity cast copper alloy material. Bolts, nuts, washers and lockwashers shall be made of silicon bronze and supplied as a part of the connector body and shall be of the two-bolt type.

2. Split bolt connector types are NOT allowed unless indicated on the Drawings.

3. The connectors shall meet or exceed UL 467 and be clearly marked with the catalog number, conductor size and manufacturer.

B. Compression Connectors

1. The compression connectors shall be manufactured from pure wrought copper. The conductivity of this material shall be no less than 99 percent by IACS Standards.

2. The connectors shall meet or exceed the performance requirements of IEEE 837, latest revision.

3. The installation of the connectors shall be made with a compression, tool and die system, as recommended by the manufacturer of the connectors.

4. The connectors shall be clearly marked with the manufacturer, catalog number, conductor size and the required compression tool settings.

5. Each connector shall be factory filled with an oxide-inhibiting compound.

PART 3 EXECUTION

3.1 APPLICATION

A. Equipment Grounding Conductors: Comply with NEC Article 250 for types, sizes, and quantities of equipment grounding conductors, except where specific types, larger sizes, or more conductors than required by NEC are indicated.

1. Install Equipment Grounding Conductor (EGC) with circuit conductors for the items below in addition to those required by Code:

a. Feeder circuits.

b. Lighting branch circuits.

c. Receptacle branch circuits.

d. Single-phase motor or appliance branch circuits.

e. Three-phase motor or appliance branch circuits.

f. Flexible raceway runs.

g. Metal-clad (MC) cable runs.

2. Nonmetallic Raceways: Install an equipment grounding conductor in nonmetallic raceways unless they are designated for telephone or data cables.

3. Heat-Tracing Circuits: Install a separate equipment grounding conductor to each heat-tracing assembly, and antifrost heating cable. Bond conductor to heater units, piping, connected equipment, and components.

B. Mechanical System Grounding:

1. All mechanical equipment, including but not limited to pumps, motors, packaged equipment, fans, heaters, etc. and their enclosures shall be properly grounded in accordance with Article 250 of the National Electrical Code.

2. Terminal Cabinets: Terminate grounding conductor on cabinet grounding terminal.

3.2 INSTALLATION

A. General: Ground electrical systems and equipment according to NEC requirements, except where Drawings or Specifications exceed NEC requirements.

B. Grounding Conductors: Route along the shortest and straightest paths possible, except as otherwise indicated. Avoid obstructing access or placing conductors where they may be subjected to strain, impact, or damage.

C. Grounding shall satisfy requirements of the applicable publications. All exposed noncurrent-carrying metallic parts of electrical equipment, metallic raceway systems, grounding

conductor in nonmetallic raceways, and grounded conductors of the wiring system shall be grounded.

D. The grounded conductor (neutral) of the wiring system shall be connected to the system grounding conductor at a single place in the system by removable bonding jumpers, sized according to the applicable provisions of the National Electrical Code. The grounded conductor (neutral) connection to the grounding conductor (ground) shall be located in the enclosure for the system's overcurrent protection or where otherwise indicated on the Drawings or Specifications.

E. Ground buses and neutral buses in all switchboards, distribution panelboards, branch panelboards, and those provided in any equipment shall be isolated except where required to be connected as specified above for the service entrance and in transformer terminal compartments.

F. Equipment grounding conductors shall be extended from the ground bus in the distribution equipment to the receptacle, fixture or device lugs where they are provided. When not provided, they shall be connected to equipment enclosures. The connections shall be arranged such that removal of receptacle, the equipment grounding conductors, or ground jumpers from ground busing, shall not affect the system ground.

G. Ground bus shall be provided as necessary to provide termination for equipment grounding conductor. Non-current carrying metal parts of electric equipment shall be effectively grounded by bonding to the bus.

H. Raceways shall not be considered as a grounding conductor. Each power, lighting, or control raceway shall have a separate equipment grounding conductor installed. Receptacles shall have a separate grounding pole.

3.3 CONNECTIONS

A. General: Make connections so possibility of galvanic action or electrolysis is minimized. Select connectors, connection hardware, conductors, and connection methods so metals in direct contact will be galvanically compatible.

1. Use electroplated or hot-tin-coated materials to assure high conductivity and to make contact points closer in order of galvanic series.

2. Make connections with clean, bare metal at points of contact.

3. Make aluminum-to-steel connections with stainless-steel separators and mechanical clamps.

4. Make aluminum-to-galvanized steel connections with tin-plated copper jumpers and mechanical clamps.

5. Coat and seal connections having dissimilar metals with inert material to prevent future penetration of moisture to contact surfaces.

B. Equipment Grounding Conductor (EGC) Terminations: For 8 AWG and larger, use compression-type grounding lugs. 10 AWG and smaller grounding conductors may be terminated with wire nut connectors as specified in Division 26 Section, “Conductors and Cables”.

C. Non-Contact Metal Raceway Terminations: Where metallic raceways terminate at metal housings without mechanical and electrical connection to housing, terminate each conduit with a grounding bushing. Connect grounding bushings with a bare grounding conductor to grounding bus or terminal in housing. Bond electrically non-continuous conduits at both entrances and exits with grounding bushings and bare grounding conductors, except as otherwise indicated.

D. Tighten screws and bolts for grounding and bonding connectors and terminals according to manufacturer's published torque-tightening values. Where these requirements are not available, use those specified in UL 486A and UL 486B.

E. Compression-Type Connections: Use hydraulic compression tools to provide correct circumferential pressure for compression connectors. Use tools and dies recommended by manufacturer of connectors. Provide embossing die code or other standard method to make a visible indication that a connector has been adequately compressed on grounding conductor.

END OF SECTION

DIVISION 26
SECTION 260528
ELECTRICAL FIRESTOPPING
TABLE OF CONTENTS

PART 1 GENERAL

1.1 RELATED DOCUMENTS
1.2 SUMMARY
1.3 REFERENCES
1.4 DEFINITIONS
1.5 SYSTEM DESCRIPTION
1.6 SUBMITTALS
1.7 QUALITY ASSURANCE
1.8 DELIVERY, STORAGE AND HANDLING
1.9 PROJECT CONDITIONS
1.10 GUARANTEE

PART 2 PRODUCTS

2.1 MANUFACTURERS
2.2 THROUGH-PENETRATION FIRESTOPPING OF FIRE-RATED CONSTRUCTION
2.3 ACCESSORIES

PART 3 EXECUTION

3.1 EXAMINATION
3.2 PREPARATION
3.3 INSTALLATION
3.4 FIELD QUALITY CONTROL
3.5 ADJUSTING AND CLEANING
3.6 SYSTEMS AND APPLICATION SCHEDULES

SECTION 260528 - ELECTRICAL FIRESTOPPING

PART 1 GENERAL

1.1 RELATED DOCUMENTS

A. Drawings and general provisions of the Contract, including General and Supplementary Conditions and Division 01 Specification Sections, apply to this Section.

1.2 SUMMARY

A. Section includes:

1. Through-penetration firestopping in fire rated construction.

B. Related items: Raceway seals and manufactured electrical devices: Refer to Division 26 Section, “Raceways and Boxes”.

1.3 REFERENCES

A. Underwriters Laboratories

1. UL Fire Resistance Directory

a. Through-penetration firestop devices (XHCR)

b. Fire resistance rating (BXUV)

c. Through-penetration firestop systems (XHEZ)

d. Fill, void, or cavity material (XHHW)

B. American Society for Testing and Materials Standards: ASTM E 814-88: Standard Test Method for Fire Tests of Through-Penetration Firestops.

1.4 DEFINITIONS

A. Assembly: Particular arrangement of materials specific to given type of construction described or detailed in referenced documents.

B. Barriers: Time-rated fire walls, time rated ceiling/floor assemblies and structural floors.

C. Firestopping: Methods and materials applied in penetrations and unprotected openings to limit spread of heat, fire, gasses and smoke.

D. Penetration: Opening or foreign material passing through or into barrier or structural floor such that full thickness of rated materials is not obtained.

E. System: Specific products and applications classified and numbered by Underwriters Laboratories, Inc. to close specific barrier penetrations.

F. Sleeve: Metal fabrication or pipe section extended through thickness of barrier and used to permanently guard penetration. Refer to Division 26 Section, “Common Work Results for Electrical” for sleeve requirements.

1.5 SYSTEM DESCRIPTION

A. Design Requirements

1. Fire-rated construction: Maintain barrier and structural floor fire resistance ratings including resistance to cold smoke at all penetrations, connections with other surfaces or types of construction, at separations required to permit building movement and sound or vibration absorption.

1.6 SUBMITTALS

A. Submit in accordance with Division 01, unless otherwise indicated.

B. Product Data: Manufacturer's specifications and technical data including the following:

1. Detailed specification of construction and fabrication.

2. Manufacturer's installation instructions.

1.7 QUALITY ASSURANCE

A. Installer's qualifications: Firm experienced in installation or application of systems similar in complexity to those required for this project, plus the following:

1. Acceptable to or licensed by manufacturer, State or local authority where applicable.

2. At least 2 years experience with systems.

3. Successfully completed at least 5 comparable scale projects using this system.

B. Local and State regulatory requirements: Submit forms or acceptance for proposed assemblies not conforming to specific UL Firestop System numbers, or UL classified devices.

C. Materials shall have been tested to provide fire rating at least equal to that of the construction.

D. Manufacturer shall be a member of the International Firestop Council (IFC).

1.8 DELIVERY, STORAGE, AND HANDLING

A. Packing and shipping:

1. Deliver products in original unopened packaging with legible manufacturer's identification.

2. Coordinate delivery with scheduled installation date, allow minimum storage at site.

B. Storage and protection: Store materials in a clean, dry, ventilated location. Protect from soiling, abuse, moisture and freezing when required. Follow manufacturer's instructions.

1.9 PROJECT CONDITIONS

A. Existing conditions:

1. Verify existing conditions and substrates before starting work. Correct unsatisfactory conditions before proceeding.

2. Proceed with installation only after penetrations of the substrate and supporting brackets have been installed.

B. Environmental requirements:

1. Furnish adequate ventilation if using solvent.

2. Furnish forced air ventilation during installation if required by manufacturer.

3. Keep flammable materials away from sparks or flame.

4. Provide masking and drop cloths to prevent contamination of adjacent surfaces by firestopping materials.

1.10 GUARANTEE

A. Submit copies of written guarantee agreeing to repair or replace joint sealers which fall in joint adhesion, extrusion resistance, migration resistance, or general durability or appear to deteriorate in any other manner not clearly specified by submitted manufacturer's data as an inherent quality of the material for the exposure indicated. The guarantee period shall be two years from date of substantial completion unless otherwise noted.

PART 2 PRODUCTS

2.1 MANUFACTURERS

A. Subject to compliance with requirements, manufacturers offering products that may be incorporated into the work include, but are not limited to, the following:

1. Hilti

2. 3M

3. Nelson

2.2 THROUGH-PENETRATION FIRESTOPPING OF FIRE-RATED CONSTRUCTION

A. Systems of devices listed in the UL Fire Resistance Directory under categories XHCR and XHEZ may be used, providing that it conforms to the construction type, penetrate type, annular space requirements and fire rating involved in each separate instance, and that the system be symmetrical for wall applications. Systems or devices must be asbestos-free.

1. Additional requirements: Withstand the passage of cold smoke either as an inherent property of the system, or by the use of a separate product included as a part of the UL system or device, and designed to perform this function.

2. Acceptable manufacturers and products.

a. Those listed in the UL Fire Resistance directory for the UL System involved and as further defined in the "System and Applications Schedule" in Part 3 of this Section.

b. All firestopping products must be from a single manufacturer.

2.3 ACCESSORIES

A. Fill, void or cavity materials: As classified under category XHHW in the UL Fire Resistance Directory.

B. Forming materials: As classified under category XHKU in the UL Fire Resistance Directory.

C. Sleeves: Minimum 24 MSG galvanized steel, 12-inch diameter or smaller steel pipe. Sleeve shall project ½-inch from each surface of the floor/wall. Size as recommended by firestop manufacturer.

PART 3 EXECUTION

3.1 EXAMINATION

A. Verification of conditions: Examine areas and conditions under which work is to be performed and identify conditions detrimental to proper or timely completion.

1. Verify barrier penetrations are properly sized and in suitable condition for application of materials.

2. Do not proceed until unsatisfactory conditions have been corrected.

3.2 PREPARATION

A. Clean surfaces to be in contact with penetration seal materials of dirt, grease, oil, loose materials, rust, or other substances that may affect proper fitting, adhesion, or the required fire resistance.

3.3 INSTALLATION

A. Install penetration seal materials in accordance with printed instructions of the UL Fire Resistance Directory and in accordance with manufacturer's instruction.

B. Seal holes or voids made by penetrations to ensure an effective barrier.

C. Protect materials from damage on surfaces subject to traffic.

D. When large openings are created in walls or floors to permit installation of conduits, cable tray, or other items, close unused portions of opening with firestopping materials tested for the application.

E. Provide sleeves the full thickness of the assembly being penetrated and cut sleeves to a length of 1-inch more than the overall thickness of the penetration, or as recommended by the firestop manufacturer.

3.4 FIELD QUALITY CONTROL

A. Examine penetration sealed areas to ensure proper installation before concealing or enclosing areas.

B. Keep areas of work accessible until inspection by applicable code authorities.

C. Perform under this section patching and repairing of firestopping caused by cutting or penetration by other trades.

3.5 ADJUSTING AND CLEANING

A. Clean up spills of liquid components.

B. Neatly cut and trim materials as required.

C. Remove equipment, materials and debris, leaving area in undamaged, clean condition.

3.6 SYSTEMS AND APPLICATION SCHEDULES*

PENETRATING ITEM	CONCRETE	GYPSUM	WOOD FLOOR/CEILING
Metal Pipe	CAJ1001 CP25S/L, CP25N/S CAJ1006 CS-195+, FS-195+ CAJ1007 FS-195+, 1-inch& 2-inch Wide CAJ1009 2000, 2000+, 2003 CAJ1010 2000, 2000+, 2003 CAJ1012 2000, 2000+, 2003 CAJ1013 2000, 2000+, 2003 CAJ1014 2000, 2000+, 2003 CAJ1015 2000, 2000+, 2003 CAJ1017 FD 150 CAJ1021 FD 150 CAJ1027 MPS-2+ CAJ1044 CP 25WB+ CAJ1052 CP 25S/L, CP 25N/S CAJ1058 2000, 2000+, 2003 CAJ1060 2000, 2000+, 2003 CAJ1063 2000, 2000+, 2003 CAJ1066 CP 25N/S,CP 25S/L, CP 25WB+ CAJ1091 CP 25N/S,CP 25S/L, CP	WL1001 CP 25 WL1002 FS-195+ WL1003 CP 25WB+,CP 25N/S WL1008 2000+ WL1009 2000+ WL1010 2000+ WL1016 CP 25WB+ WL1017 CP 25WB+,CP 25N/S WL1032 CP 25WB+,CP 25N/S WL1036 FD 150 WL1037 CS-195+,FS-195+ WL1067 CP 25N/S WL1073 CP 25WB+ WL1080 MPS-2+ WL1082 2000+	FC1002 CP 25 FC1003 2000,2000+,20003 FC1006 CP 25WB+

PENETRATING ITEM	CONCRETE	GYPSUM	WOOD FLOOR/CEILING
	25WB+ CAJ1092 CP 25WB+ CAJ1112 FS-195+ CAJ1160 CP 25S/L, CP 25N/S CAJ1175 CP 25WB+ CAJ1176 CP 25WB+ CAJ1188 2000+ CBJ1020 CS-195+, FS-195+ CBJ1021 CS-195+, MPS-2+ CBJ1031 2001 CBJ1032 2001 FA1002 CP 25WB+ WJ1010 CP 25WB+ WJ1023 2001		
Non-Metallic	CAJ2001 FS-195+, 1-inch& 2-inch WIDE, PPD'S CAJ2002 FS-195+ CAJ2003 CS-195+, FS-195+ CAJ2005 FS-195+ CAJ2006 FS-195+ CAJ2013 FS-195+ CAJ2019 2000, 2000+, 2003 CAJ2027 FS-195+, CP 25N/S, CP 25S/L, CP 25WB+ CAJ2028 FS-195, MPS-2+ CAJ2029 FS-195+, PPD'S CAJ2030 CS-195+, FS-195+ CAJ2040 FS-195+, CP 25WB+ CAJ2044 FS-195+, CP 25N/S, CP 25S/L CP 25 WB+ CAJ2090 FS-195+ CAJ2177 FS-195+, PPD'S FA2001 FS-195+, PPD'S FS2002 CS-195+, FS-195+, MPS-2+, PPD'S FA2011 FS-195+ WJ2012 FS-195+ 1-inch WIDE	WL2002 FS-195+, PPD'S WL2003 FS-195+ WL2004 FS-195+ WL2005 FS-195+ 4' WIDE WL2006 FS-195+ WL2013 FS-195+ WL2031 CS-195+, FS-195+ WL2032 CS-195+, FS-195+ WL2033 FS-195+ WL2073 FS-195+ 1-inch WIDE	FC2002 FS-195+, PPD'S FC2007 FS-195+, PPD'S FC2008 FS-195+ FC2009 FS-195+, PPD'S FC2024 FS-195+ FC2026 FS-195+ FC2028 FS-195+, 1' & 2-inch WIDE, PPD'S
Insulated Cable	CAJ3001 CP 25N/S, CP 25S/L CAJ3005 CS 195+, FS-195+ CAJ3007 2001 CAJ3009 2000, 2000+, 2003 CAJ3010 2000, 2000+, 2003 CAJ3011 2001 CAJ3014 FD 150 CAJ3015 FD 150 CAJ3021 MPS-2+ CAJ3029 2000, 2000+, 2003 CAJ3030 CP 25WB+ CAJ3031 CP 25N/S, CP 25S/L CAJ3041 2000, 2000+, 2003 CAJ3044 CS-195+, FS-195+ CAJ3058 FS-195+, MPS-2+ CAJ3071 CP 25N/S, CP 25S/L CAJ3074 CP 25N/S, CP 25S/L	WL3001 CP 25, MPS-2+ WL3008 2000+ WL3009 2000+ WL3015 CP 25WB+, CP 25N/S WL3022 2000+ WL3030 FS-195+ WL3031 MPS-2+ WL3032 CP 25WB+ WL3041 2000+ WL3051 CP 25N/S WL3056 CP25N/S WL3062 CP 25WB+	FC3001 CP 25S/L, CP 25N/S FC3002 2000+ FC3003 2000, 2000+, 20003 FC3007 CP 25WB+, MPS-2+ FC3008 FS-195+

PENETRATING ITEM	CONCRETE	GYPSUM	WOOD FLOOR/CEILING
	CAJ3075 2001 CAJ3080 CP 25WB+ CBJ3016 CS-195+, FS-195+ CBJ3017 CS-195+, MPS-2+ FA3001 CP 25WB+ FB3004 CS-195+, MP WJ3015 2001 WJ3016 2001		
Mixed Penetrating Items Combos	CAJ8001 CS-195+ FS-195+ CAJ8003 2000, 2000+, 20003 CAJ8004 2000, 2000+, 20003 CAJ8006 2001 CAJ8013 FS-195+, CP 25 CBJ8004 CS-195, FS-195+ CBJ8005 CS-195+, MPS-2+ CBJ8008 2001 FA8001 FS-195+, CP 25WB+	WL8002 CS-195+, FS-195+	

* Underwriter's Laboratories, Inc., Fire Resistance Directory.

END OF SECTION

DIVISION 26
SECTION 260529
HANGERS AND SUPPORTS
TABLE OF CONTENTS

PART 1 GENERAL

1.1 RELATED DOCUMENTS
1.2 SUMMARY
1.3 SUBMITTALS
1.4 QUALITY ASSURANCE
1.5 PRODUCT DELIVERY, STORAGE, AND HANDLING
1.6 GUARANTEE

PART 2 PRODUCTS

2.1 MANUFACTURERS
2.2 COATINGS
2.3 MANUFACTURED SUPPORTING DEVICES
2.4 ANCHOR METHODS

PART 3 EXECUTION

3.1 EXAMINATION
3.2 INSTALLATION
3.3 CLEANUP
3.4 PROTECTION

SECTION 260529 – HANGERS AND SUPPORTS

PART 1 GENERAL

1.1 RELATED DOCUMENTS

A. Drawings and general provisions of the Contract, including General and Supplementary Conditions and Division 01 Specification Sections, apply to this Section.

B. Requirements of the following Sections apply to this Section:

1. Division 26 Section, "Common Work Results for Electrical" for general installation requirements.

1.2 SUMMARY

A. This Section includes secure support from the building structure for electrical items by means of hangers, supports, anchors, sleeves, inserts, seals, and associated fastenings.

B. Provide equipment supports consisting of structural members, hangers, rods, racks, and incidental materials.

C. Provide all labor, supervision, and fabrication. Design and construct supporting structures of strength to safely withstand stresses to which they may be subjected and to properly distribute the load and impact over building areas. Provide all engineering and fabrication as required for installation of support system.

D. Provide hangers, clamps, anchors, inserts, supports, supplementary steel framing, and hardware of the proper size and load capacity to support electrical equipment and raceways, whether indicated on the drawings or not.

1.3 SUBMITTALS

A. General: Submit the following in accordance with conditions of Contract and Division 01 Specification Sections.

B. Product data for each type of product specified.

1.4 QUALITY ASSURANCE

A. Electrical Component Standard: Components and installation shall comply with NFPA 70 *National Electrical Code*.

B. Electrical components shall be listed and labeled by UL, ETL, CSA, or other approved, nationally recognized testing and listing agency that provides third-party Certification follow-up services.

C. Installation Standard: Installation shall meet or exceed the National Electrical Contractors Association (NECA) Standard of Installation.

D. Manufacturer's Qualifications:

1. The Manufacturer shall not have had less than ten years' experience in manufacturing Strut Support Systems.

2. The Manufacturer must certify in writing all components supplied have been produced in accordance with an established quality assurance program.

E. All Strut Support System components must be supplied by a single manufacturer.

F. Standards:

1. Work shall meet the requirements of the following standards:

a. Federal, State and Local Codes.

b. American Iron and Steel Institute (AISI) Specification for the Design of Cold-Formed Steel Structural Members.

c. American Society for Testing and Materials (ASTM).

d. Underwriters Laboratories (UL).

e. National Electrical Code (NEC).

1.5 PRODUCT DELIVERY, STORAGE, AND HANDLING

A. All material is to be delivered to the work site in original factory packaging to avoid damage to the finish.

B. Upon delivery to the work site, all components shall be protected from the elements by a shelter or other covering.

1.6 GUARANTEE

A. Separate guarantees shall be issued from the erector and manufacturer, valid for a period of one year against any defects that may arise from the installation or manufacture of the Strut Support System components.

PART 2 PRODUCTS

2.1 MANUFACTURERS

A. Available Manufacturers: Subject to compliance with requirements, manufacturers offering products that may be incorporated in the Work include, but are not limited to, the following:

1. Slotted Metal Angle and U-Channel Systems:

a. American Electric, Kindorf

b. Alstrut

c. Unistrut Diversified Products

d. Power-Strut

e. Thomas & Betts

2.2 COATINGS

A. Dry, Interior Locations: Supports, support hardware, and fasteners shall be protected with zinc coating or with treatment of equivalent corrosion-resistance using approved alternative treatment, finish, or inherent material characteristic. All products installed in dry interior locations shall be hot-dip galvanized, unless otherwise noted.

B. Damp or Wet Locations: Supports, support hardware, and fasteners installed in damp or wet locations, including exterior locations, shall be stainless steel.

2.3 MANUFACTURED SUPPORTING DEVICES

A. Raceway Supports: Clevis hangers, riser clamps, conduit straps, threaded C-clamps with retainers, ceiling trapeze hangers, wall brackets, and spring steel clamps.

B. Fasteners: Types, materials, and construction features, as follows:

1. Expansion Anchors - Carbon steel wedge or sleeve type.

2. Toggle Bolts - All steel springhead type.

3. Power-Driven Threaded Studs - Heat-treated steel, designed specifically for the intended application.

C. Cable Supports for Vertical Conduit: Factory-fabricated assembly consisting of threaded body and insulating wedging plug for non-armored electrical cables in riser conduits. Provide plugs with number and size of conductor gripping holes as required to suit individual risers. Construct body of malleable-iron casting with hot-dip galvanized finish.

D. U-Channel Systems: Sixteen-gauge channels with 9/16-inch-diameter holes at a minimum of eight inches on center in top surface. Provide fittings and accessories that mate and match with U-channel and are of the same manufacturer.

2.4 ANCHOR METHODS

A. Hollow Masonry: Toggle bolts or plastic conical type expansion anchors.

B. Solid Masonry: Lead expansion anchors or preset inserts.

C. Metal Surfaces: Machine screws, bolts, or welded studs.

D. Wood Surfaces: Wood screws.

E. Concrete Surfaces: Self-drilling anchors or power-driven studs.

PART 3 EXECUTION

3.1 EXAMINATION

A. The installer shall inspect the work area prior to installation. If work area conditions are unsatisfactory, installation shall not proceed until satisfactory corrections are completed.

3.2 INSTALLATION

A. Set Strut System components into final position true to line, level and plumb, in accordance with approved Shop Drawings.

B. Anchor material firmly in place. Tighten all connections to their recommended torques.

C. Install supporting devices to fasten electrical components securely and permanently in accordance with NEC requirements.

D. Coordinate with the building structural system and with other electrical installation.

E. Raceway Supports: Comply with the NEC and the following requirements:

1. Conform to manufacturer's recommendations for selection and installation of supports.

2. Strength of each support shall be adequate to carry present and future load multiplied by a safety factor of at least four. Where this determination results in a safety allowance of less than 200 pounds, provide additional strength until there is a minimum of 200 pounds safety allowance in the strength of each support.

3. Install individual and multiple (trapeze) raceway hangers and riser clamps as necessary to support raceways. Provide U-bolts, clamps, attachments, and other hardware necessary for hanger assembly and for securing hanger rods and conduits.

4. Support parallel runs of horizontal raceways together on trapeze-type hangers.

5. Support individual horizontal raceways by separate pipe hangers. Spring steel fasteners may be used in lieu of hangers only for 1-1/2-inch and smaller raceways serving lighting and receptacle branch circuits above suspended ceilings only. For hanger rods with spring steel fasteners, use 1/4-inch-diameter or larger threaded steel. Use spring steel fasteners that are specifically designed for supporting single conduits or tubing.

6. Space supports for raceways in accordance with Table I of this Section. Space supports for raceway types not covered by the above in accordance with NEC.

7. Support exposed and concealed raceway within one foot of an unsupported box and access fittings. In horizontal runs, support at the box and access fittings may be

omitted where box or access fittings are independently supported and raceway terminations are not made with chase nipples or threadless box connectors.

8. In vertical runs, arrange support so the load produced by the weight of the raceway and the enclosed conductors is carried entirely by the conduit supports with no weight load on raceway terminations.

F. Miscellaneous Supports: Support miscellaneous electrical components as required to produce the same structural safety factors as specified for raceway supports. Install metal channel racks for mounting disconnects, light fixtures, and other devices.

G. In open overhead spaces, cast boxes threaded to raceways need not be supported separately except where used for fixture support; support sheet metal boxes directly from the building structure or by bar hangers. Where bar hangers are used, attach the bar to the raceways on opposite sides of the box and support the raceway with an approved type of fastener not more than 24 inches from the box.

H. Fastening: Unless otherwise indicated, fasten electrical items and their supporting hardware securely to the building structure, including, but not limited to conduits, raceways, boxes, disconnect switches, and control components in accordance with the following:

1. Fasten by means of toggle bolts on hollow masonry units, concrete inserts or expansion bolts on concrete or solid masonry, and machine screws, welded threaded studs, or spring-tension clamps on steel. Threaded studs driven by a powder charge and provided with lock washers and nuts may be used instead of expansion bolts and machine screws. Do not weld conduit, pipe straps, or items other than threaded studs to steel structures.

2. Holes cut to depth of more than 1-1/2 inches in reinforced concrete beams or to depth of more than 3/4-inch in concrete shall not cut the main reinforcing bars. Fill holes that are not used.

3. Ensure that the load applied to any fastener does not exceed 25 percent of the proof test load. Use vibration-and shock-resistant fasteners for attachments to concrete slabs.

I. Tests: Test pull-out resistance of one of each type, size, and anchorage material for the following fastener types:

1. Expansion anchors.

2. Toggle bolts.

3. Power-driven threaded studs.

J. Provide all jacks, jigs, fixtures, and calibrated indicating scales required for reliable testing. Test to 90 percent of rated proof load for fastener. If fastening fails test, revise all similar fastener installations and retest until satisfactory results are achieved.

K. General Supporting Installations:

1. Provide appropriate concrete anchors for hanger rods. Rods shall be screwed into or extended through frame construction (with washer and nut). Supports shall secure conduit in place, and shall prevent vibration, provide for expansion and contraction and shall make neat appearance. Strap hangers or chains are not permitted.

2. Electrical raceways 1-1/2-inches and smaller shall be secured with 1-hole malleable iron straps or brackets to walls. Trapeze supports shall be used for groups or parallel raceways with raceways secured to trapeze with approved clamps. Individual runs of raceways 2-inches and larger shall be supported by Clevis type hangers.

3. Provide all supports including roof curbs for all equipment provided under this Section.

4. Electrical raceway supports to be spaced on the following maximum centers, unless otherwise required by the NEC:

   a. 3/4-inch to 1-inch conduit - 8 feet

   b. 1-1/4-inch and larger conduit - 10 feet

5. Provide additional hangers or steel members to distribute the load among two or more structural members when required or directed.

6. Drilling of new concrete slabs will not be permitted. Anchors and inserts shall be cast in the concrete slabs.

L. Locations:

1. Anchor bolts, sleeves, inserts, hangers, and supports required for the electrical work shall be furnished and installed under Division 26.

2. Coordinate with other trades the location of anchors, sleeves, inserts, and supports and insure that they are properly installed.

3. Openings and sleeves shall be set true to line, level, plumb, and position and shall be set true to line, level, plumb, and position and shall be so maintained during construction. Where sleeves and openings are provided in poured concrete, inspect same during and after concrete is poured to insure proper position and correct any deviation.

M. Hangers and Supports:

1. Provide hangers, angles, channels, and other supports required by field conditions to install items of electrical equipment. Design of supports and methods of fastening to building structure shall be acceptable to the Owner.

2. Use of power-actuated fasteners and devices is permitted in the vertical surfaces of the building only with the following requirements.

a. For fastening conduits 1-1/2-inch and smaller and lighting fixtures 50 lbs or less.

b. Load capacity per manufacturers' recommendations.

c. Fasteners shall be located in the thickest part of the slab.

d. Devices shall comply with OSHA requirements.

3. Use of lead shield expansion anchors is not permitted.

4. No electrical items shall rest on, or depend for support on suspended ceiling media (tiles, lath, plaster, splines, etc.).

5. In spaces with suspended ceilings, support conduits directly from structural slabs, decks (or framing members). Do not support conduits on ceiling suspension members.

6. Provide weight-distribution facilities, where required so as not to exceed the load bearing capabilities of floor or walls that bear the weight of, or support, electrical items.

7. For point-of-attachment weight of 100 lbs. or less, fasten items as follows:

a. On wood, use wood screws.

b. On concrete and solid masonry that is already in place, use self-drilling concrete anchors or expansion bolt and couplings.

c. On hollow construction, use toggle bolts.

d. On structural steel, use beam clamps.

8. For point-of-attachment weights from 100 lbs. to 300 lbs., provide supports as follows:

a. At cast-in-place concrete slabs, use concrete inserts in bottom of slab, with 8" slip-through steel rods set transverse to the reinforcing steel.

b. At concrete slab already in place, uses 16-inches x 8-inches x ½-inch steel plates at the top of the slab, with through-bolts welded in place. The plates shall be chased in and grouted flush, where no fill is to be applied.

9. For point-of-attachment weights over 300 lbs., provide supports as follows: At cast-in-place concrete slabs, uses 16-inch x 8-inch x ½-inch steel plate, with through bolts welded in place. Top of the plate shall be 1-1/2-inches below the top of the slab or on top of the slab where a fill slab is to be installed.

10. Equipment shall not be held in place by its own dead weight. Provide base anchor fasteners in each case.

11. Trapeze type hangers may be used where several conduits are to be installed at the same elevation. The spacing of such trapeze hangers shall be in accordance with the NEC for the smallest conduit in the run.

12. Vertical conduits shall be supported by heavy wrought iron clamps or collars anchored to construction at each floor.

N. Inserts:

1. Inserts for suspended items in poured concrete construction shall be malleable-iron concrete inserts, adjustable type with insert nut. Items manufactured by Barrett, Crawford, Elcen, or Grinnell shall be used where applicable.

2. Inserts for surface-mounted items shall be suitable for the composition of the slab, wall, or structure on which installation is to be made.

O. TABLE I: SPACING FOR RACEWAY SUPPORTS

TABLE I: SPACING FOR RACEWAY SUPPORTS				
Raceway Size (Inches)	No. of Conductors in Run	Location	PVC & RGS (Ft.)	EMT (Ft.)
		HORIZONTAL RUNS		
1/2, 3/4	1 or 2	Flat ceiling or wall.	5	5
1/2, 3/4	1 or 2	Where it is difficult to provide supports except at intervals fixed by the building construction.	7	7
1/2, 3/4	3 or more	Any location.	7	7
1/2 - 1	3 or more	Any location.		
1 & larger	1 or 2	Flat ceiling or wall.	6	6
1 & larger	1 or more	Where it is difficult to provide supports except at intervals fixed by the building construction.	10	10
1 & larger	3 or more	Any location.	10	10
Any	---	Concealed.	10	10
		VERTICAL RUNS		
1/2, 3/4	---	Exposed.	7	7

1, 1-1/4	---	Exposed.	8	8
1-1/2 & larger	---	Exposed.	10	10
Up to 2	---	Shaftway.	14	10
2-1/2	---	Shaftway.	16	10
3 & larger	---	Shaftway.	20	10
Any	---	Concealed.	10	10
Abbreviations:	EMT	Electrical Metallic Tubing		
	PVC	Rigid Polyvinyl Chloride Conduit		
	RGS	Rigid Galvanized Steel Conduit		

3.3 CLEANUP

A. Upon completion of this Section of work, remove all protective wraps and debris. Repair any damage due to installation of this section of work.

3.4 PROTECTION

A. During installation, protect this work from damage.

B. Upon completion of this scope of work, it shall become the responsibility of the General Contractor to protect this work from damage during the remainder of construction on the project and until substantial completion.

END OF SECTION

DIVISION 26
SECTION 260533
RACEWAYS AND BOXES
TABLE OF CONTENTS

PART 1 GENERAL

1.1 RELATED DOCUMENTS
1.2 SUMMARY
1.3 DEFINITIONS
1.4 SUBMITTALS
1.5 QUALITY ASSURANCE
1.6 COORDINATION
1.7 PROJECT RECORD DOCUMENTS

PART 2 PRODUCTS

2.1 MANUFACTURERS
2.2 METAL CONDUIT AND TUBING
2.3 COLORED METAL CONDUIT AND TUBING
2.4 NONMETALLIC CONDUIT AND TUBING
2.5 METAL WIREWAYS
2.6 OUTLET AND DEVICE BOXES
2.7 PULL AND JUNCTION BOXES
2.8 BOX EXTENSIONS
2.9 BUSHINGS
2.10 EXPANSION / DEFLECTION FITTINGS
2.11 ENCLOSURES AND CABINETS

PART 3 EXECUTION

3.1 EXAMINATION
3.2 RACEWAY AND BOX REQUIREMENTS
3.3 INSTALLATION OF RACEWAYS
3.4 INSTALLATION OF BOXES
3.5 INSTALLATION OF TERMINATIONS
3.6 FLEXIBLE CONNECTIONS
3.7 PAINTING AND FINISHES
3.8 PROTECTION
3.9 CLEANING

SECTION 260533 - RACEWAYS AND BOXES

PART 1 GENERAL

1.1 RELATED DOCUMENTS

A. Drawings and general provisions of the Contract, including General and Supplementary Conditions and Division 01 Specification Sections, apply to this Section.

B. Related Sections include the following:

1. Division 26 Section “Conductors and Cables” for conductors installed in raceways and boxes and conductor terminations.

2. Division 26 Section “Electrical Firestopping” for requirements for firestopping at penetrations through walls and floors that are fire barriers.

3. Division 26 Section “Hangers and Supports” for raceways and box supports.

4. Division 26 Section, “Surface Metal Raceway” for surface raceways, fittings, and accessories.

5. Division 26 Section “Wiring Devices” for devices installed in boxes.

1.2 SUMMARY

A. This Section includes raceways, fittings, boxes, enclosures, and cabinets for electrical wiring.

1. Raceways include the following:

a. EMT
b. FMC
c. LFMC
d. PVC
e. RGS
f. Wireways

2. Boxes, enclosures, and cabinets include the following:

a. Device boxes
b. Outlet boxes
c. Pull and junction boxes
d. Cabinets and hinged-cover enclosures

3. Miscellaneous Products include the following:

a. Expansion/Deflection fittings
b. Bushings

1.3 DEFINITIONS

A. EMT: Electrical Metallic Tubing.

B. FMC: Flexible Metal Conduit.

C. LFMC: Liquidtight Flexible Metal Conduit.

D. PVC: Rigid Polyvinyl Chloride Conduit.

E. RGS: Rigid Galvanized Steel Conduit.

1.4 SUBMITTALS

A. Product Data: For raceways, wireways and fittings, hinged-cover enclosures, and cabinets.

B. Shop Drawings: Include layout drawings showing components and wiring for nonstandard boxes, enclosures, and cabinets.

1.5 QUALITY ASSURANCE

A. Listing and Labeling: Provide raceways and boxes specified in this Section that are listed and labeled.

1. The Terms "Listed" and "Labeled": As defined in NFPA 70, Article 100.

2. Listing and Labeling Agency Qualifications: A "Nationally Recognized Testing Laboratory" as defined in OSHA Regulation 1910.7.

B. Comply with NECA's "Standard of Installation" and NECA 101 “Recommended Practice for Installing Steel Conduits”.

C. Comply with NFPA 70.

1.6 COORDINATION

A. Coordinate layout and installation of raceways and boxes with other construction elements to ensure adequate headroom, working clearance, and access.

B. Verify routing and termination locations of conduits and boxes prior to rough-in.

C. Conduit routing shown on Drawings is only approximate and diagrammatic. Route conduits as required for a complete conduit and wiring system.

D. Coordinate final locations, mounting heights, and orientation of all outlet boxes.

1.7 PROJECT RECORD DOCUMENTS:

A. Accurately record routing of all concealed conduits. Record actual routing of all exposed conduits/larger than 1 inch. Indicate actual locations and mounting heights of outlet boxes, pull and junction boxes, branch circuits, arrangements, etc.

PART 2 PRODUCTS

2.1 MANUFACTURERS

A. Available Manufacturers: Subject to compliance with requirements, manufacturers offering products that may be incorporated into the Work include, but are not limited to, the following:

1. Metal Conduit and Tubing:

   a. Allied Tube & Conduit Corporation.
   b. Anamet, Inc.; Anaconda Metal Hose.
   c. AFC/Monogram Company.
   d. Carol Cable Co., Inc.
   e. Cole-Flex Corp.
   f. Electri-Flex Co.
   g. Flexcon, Inc.; Coleman Cable Systems, Inc.
   h. Grinnell Co.; Allied Tube and Conduit Div.
   i. Monogram Co.; AFC.
   j. Spiraduct, Inc.
   k. Triangle PWC, Inc.
   l. Wheatland Tube Corporation

2. Nonmetallic Conduit and Tubing:

   a. Anamet, Inc.; Anaconda Metal Hose.
   b. Arnco Corp.
   c. Breeze-Illinois, Inc.
   d. Cantex Industries; Harsco Corp.
   e. Certainteed Corp.; Pipe & Plastics Group.
   f. Cole-Flex Corp.
   g. Condux International; Electrical Products.
   h. Electri-Flex Co.
   i. George-Ingraham Corp.
   j. Hubbell, Inc.; Raco, Inc.
   k. Lamson & Sessions; Carlon Electrical Products.
   l. R&G Sloan Manufacturing Co., Inc.
   m. Spiraduct, Inc.
   n. Thomas & Betts Corporation

3. Conduit Bodies and Fittings:

   a. American Electric; Construction Materials Group.
   b. Crouse-Hinds; Div. of Cooper Industries.
   c. Emerson Electric Co.; Appleton Electric Co.
   d. Hubbell, Inc.; Killark Electric Manufacturing Co.
   e. Lamson & Sessions; Carlon Electrical Products.
   f. O-Z/Gedney; Unit of General Signal.
   g. Scott Fetzer Co.; Adalet-PLM.

h. Spring City Electrical Manufacturing Co.
i. Thomas & Betts Corporation.

4. Metal Wireways:

a. Hoffman Engineering Co.
b. Keystone/Rees, Inc.
c. Square D Co.

5. Boxes, Enclosures, and Cabinets:

a. American Electric; FL Industries.
b. Butler Manufacturing Co.; Walker Division.
c. Crouse-Hinds; Div. of Cooper Industries.
d. Electric Panelboard Co., Inc.
e. Erickson Electrical Equipment Co.
f. Hoffman Engineering Co.; Federal-Hoffman, Inc.
g. Hubbell Inc.; Killark Electric Manufacturing Co.
h. Hubbell Inc.; Raco, Inc.
i. Lamson & Sessions; Carlon Electrical Products.
j. O-Z/Gedney; Unit of General Signal.
k. Parker Electrical Manufacturing Co.
l. Robroy Industries, Inc.; Electrical Division.
m. Scott Fetzer Co.; Adalet-PLM.
n. Spring City Electrical Manufacturing Co.
o. Thomas & Betts Corp.
p. Woodhead Industries, Inc.; Daniel Woodhead Co.

2.2 METAL CONDUIT AND TUBING

A. EMT and Fittings: Hot galvanized steel O.D. with an organic corrosion-resistant I.D. coating. Listed to UL Safety Standard 797 and manufactured in accordance with ANSI C80.3.

1. Fittings: Compression type, NEMA FB1.

B. FMC: Zinc-coated steel.

C. LFMC: Flexible steel conduit with PVC jacket.

D. RGS: ANSI C80.1 and UL 6.

E. Fittings: NEMA FB 1; compatible with conduit/tubing materials.

2.3 COLORED METAL CONDUIT AND TUBING

A. EMT: Hot galvanized steel O.D. with vibrant color top coat and an organic corrosion-resistant I.D. coating. Listed to UL Safety Standard 797 and manufactured in accordance with ANSI C80.3.

B. Provide True Color® EMT as manufactured by Allied Tube and Conduit, or approved equal by listed manufacturer.

2.4 NONMETALLIC CONDUIT AND TUBING

A. PVC: NEMA TC 2, UL 651, Schedule 40 or 80.

B. PVC Fittings: NEMA TC 3; match to conduit or conduit/tubing type and material.

2.5 METAL WIREWAYS

A. Material: Sheet metal sized and shaped as indicated.

B. Fittings and Accessories: Include couplings, offsets, elbows, expansion joints, adapters, hold-down straps, end caps, and other fittings to match and mate with wireways as required for complete system.

C. Select features, unless otherwise indicated, as required to complete wiring system and to comply with NFPA 70.

D. Wireway Covers: Screw-cover type.

E. Finish:

1. Manufacturer's standard galvanized finish (NEMA 1) for dry interior locations. Enamel finish (NEMA 3R) for wet locations.

2.6 OUTLET AND DEVICE BOXES

A. Sheet Metal Boxes: NEMA OS 1, galvanized flat-rolled sheet steel.

B. Cast-Metal Boxes: NEMA FB 1, Type FD, cast box, deep type, with gasketed cover, and threaded hubs.

C. Outlet Box Accessories: Provide outlet box accessories as required for each installation, including corrosion-resistant screws, mounting brackets, wallboard hangers, extension rings, fixture studs, cable clamps, and metal straps for supporting outlet boxes which are compatible with outlet boxes being used and fulfilling requirements of individual wiring situations.

D. Nonmetallic: NEMA OS2.

2.7 PULL AND JUNCTION BOXES

A. Small Sheet Metal Boxes: NEMA OS 1, galvanized flat-rolled sheet steel.

B. Sheet metal boxes over 12" in any dimension shall comply with the requirements of Article "Enclosures and Cabinets" of this Section.

C. Boxes for Outdoor and Wet Locations: Flat flanged, surface-mounted, UL listed as raintight, galvanized cast iron box and cover with neoprene gasket and stainless steel cover screws.

2.8 BOX EXTENSIONS

A. Prohibited on new construction.

B. Where more than one box is needed to flush out installation, provide a large (i.e., 6" x 6") box to flush out the existing box and nipple over to a new box.

2.9 BUSHINGS

A. Bushings shall be self-extinguishing thermoplastic type with 105 degrees C (minimum) temperature rating.

B. Bushings with grounding lugs shall be malleable iron body with 105 degrees C (minimum) insulating ring. Insulating material shall be locked in place and non-removable.

2.10 EXPANSION / DEFLECTION FITTINGS

A. Provide an expansion/deflection fitting in each concealed or exposed electrical run crossing a building expansion joint. Fittings shall be complete with bronze end couplings, neoprene sleeves, tinned copper braid integral bonding jumper and stainless steel bands. Expansion/deflection fittings shall be suitable for the size and type of conduit run they connect. Bonding jumper shall comply with NEC and UL requirements.

B. Expansion/deflection fitting shall accommodate the following movements without collapsing or fracturing the conduit and damaging the wires it contains:

1. Axial expansion or contraction up to 3/4-inch.

2. Angular misalignment of the axes of the conduits up to 30 degrees in all directions.

3. Parallel misalignment of the axes of the conduits up to 3/4-inch in all directions.

C. Expansion/Deflection fitting shall be OZ/Gedney Type "DX" or approved equal by Crouse Hinds (Type XD).

2.11 ENCLOSURES AND CABINETS

A. Hinged-Cover Enclosures: NEMA 250, Type 1 in dry locations, and Type 4 in wet or damp locations, with continuous hinge cover and flush latch.

1. Metal Enclosures: Steel, finished inside and out with manufacturer's standard enamel.

B. Cabinets: NEMA 250, Type 1, galvanized steel box with removable interior panel and removable front, finished inside and out with manufacturer's standard enamel. Hinged door in front cover with flush latch and concealed hinge. Key latch to match panelboards.

Include metal barriers to separate wiring of different systems and voltage, and include accessory feet where required for freestanding equipment.

PART 3 EXECUTION

3.1 EXAMINATION

A. Examine surfaces to receive raceways, boxes, enclosures, and cabinets for compliance with installation tolerances and other conditions affecting performance of raceway installation. Do not proceed with installation until unsatisfactory conditions have been corrected.

3.2 RACEWAY AND BOX REQUIREMENTS

A. Conduit Application Schedule:

APPLICATION	CONDUIT TYPE	REMARKS
Exposed exterior locations.	RGS	Use threaded or rain-tight fittings and stainless steel hardware.
Damp/Wet interior locations.	RGS	Use threaded or rain-tight fittings and stainless steel hardware.
Exposed dry interior locations	EMT, RGS	RGS where subject to physical damage.
Equipment connections in dry interior locations.	FMC (e.g. Greenfield)	Short lengths only (maximum 6 feet).
Equipment connections in wet interior locations.	LFMC (e.g. Sealtite)	Short lengths only (maximum 6 feet). Use threaded or rain-tight fittings and stainless steel hardware.
Equipment connections in exterior locations.	LFMC (e.g Sealtite)	Short lengths only (maximum 6 feet). Use threaded or rain-tight fittings and stainless steel hardware.
Concealed in dry wall construction.	EMT, MC Cabling	
Concealed above suspended ceilings.	EMT, MC Cabling	

B. General Requirements

1. Provide hot-dip Rigid Galvanized Steel Conduit (RGS) for exposed work in locations subject to physical damage.

2. Aluminum conduit is prohibited.

C. Fittings:

1. All fittings to match conduit material and to be suitable for the purpose intended. Join conduit with fittings designed and approved for the purpose and make joints tight.

2. Provide UL listed compound filled sealing fittings for NEC-required locations, for conduits passing from interior to exterior, and at the interface of widely different space temperatures such as refrigeration or cold storage rooms where conduits pass

from warm locations to cool locations, such as the boundaries of air conditioned spaces and non-conditioned air spaces. For concealed conduits, install each fitting in a flush steel box with a blank cover plate having a finish similar to that of adjacent plates or surfaces.

3. Provide expansion fittings with bonding jumpers where conduits cross expansion joints or where otherwise required to compensate for thermal expansion and contraction. Provide expansion fittings in each straight uninterrupted run of surface-mounted conduit, both horizontal and vertical, in excess of 200 feet. Distance between fittings shall not exceed 200 linear feet. The Contractor shall refer to the Architectural Drawings for expansion joint locations.

4. Fasten rigid steel conduit with threaded galvanized steel fittings, double locknuts, and insulated bushings. Insulated bushings shall be OZ/Gedney type "B", or equal.

5. Fasten EMT conduit with concrete-tight or rain-tight compression fittings made from zinc-plated steel. Fittings using set screw or indentations as a means of attachment or made from cast "white metal" are prohibited. All connectors shall have insulated throats.

6. Fasten liquid-tight conduit with fittings incorporating a threaded ferrule, nylon sealing ring, and steel or malleable iron compression nut and body. Furnish Crouse Hinds metallic liquid-tight fittings, or equal.

7. Fasten Flexible Metallic Conduit (FMC) with Thomas & Betts (T&B) "Tite-Bite" insulated connectors, or equal.

8. Watertight fittings shall use a copper base anti-corrosive conductive compound. Provide watertight fittings for conduits in damp or wet locations.

D. Box Locations:

1. Electrical boxes shall accommodate wire pulling, splices, taps, equipment connections and Code compliance.

2. Coordinate access doors as required to provide access to boxes in hard ceilings and similar inaccessible areas.

E. Outlet Boxes:

1. Outlet boxes for dry interior locations and for concealed work shall be zinc-coated or cadmium-plated sheet steel boxes suitable for the service and type outlet.

2. Boxes and conduit fittings for damp or wet locations and exposed locations subject to damage shall be NEMA 4 cast-aluminum, cast steel or cast iron type with gasketed cover plates and threaded hubs for conduit entrance.

3. Extra large boxes shall be provided in accordance with the National Electrical Code where necessary to prevent crowding of wire in the box.

4. Plastic boxes and cast "white metal" boxes classified as NEMA 4 will not be acceptable.

5. Outlet boxes in unplastered brick or block walls shall be provided with deep square-cut device covers. They shall be set so that the brick or block can be cut and fitted closely to the cover opening and so that the standard wall plate will cover the joint between the brick or block and the box.

6. All outlet boxes used for supporting fixtures shall be furnished with malleable iron fixture studs of "no-bolt" type secured by locknut.

7. All boxes, whether outlet, junction, pull, or equipment, shall be furnished with appropriate covers.

8. No sectionalized boxes shall be used.

9. Provide factory-made knockout closures for unused openings in outlet boxes.

10. Provide blank coverplates for all unused boxes.

11. For multiple device installations, provide multi-gang boxes. Sectional boxes are not permitted. Provide barrier separation of different voltage conductors in the same box.

12. Provide recessed outlet boxes in finished areas, supported from interior partition studs. Supports are to be stamped steel stud bridges for hollow stud walls and adjustable steel channel fasteners for flush ceiling outlet boxes.

13. Provide back supports for boxes in metal stud walls.

F. Junction and Pull Boxes:

1. Junction and pull boxes shall be furnished and installed as shown or where required to facilitate pulling of wires or cables. Such boxes shall be installed in accessible locations. All boxes for concealed work shall be constructed of 12 gauge USS galvanized sheet steel minimum, unless otherwise specified or indicated and provided with mounting brackets and flat screw covers secured in position by round head brass or stainless steel 300 grade machine screws. Boxes for exterior work shall be cast aluminum or galvanized cast iron type with threaded hubs unless otherwise directed. Gasketed cover plates shall be furnished for outdoor installation.

2. Provide barrier (separators) where different system voltage share the same box.

3. Wherever possible, locate pull and junction boxes above accessible ceilings in finished areas.

4. Pull or junction boxes shall be supported independently of conduit.

3.3 INSTALLATION OF RACEWAYS

A. Install raceways, boxes, enclosures, and cabinets as indicated, according to manufacturer's written instructions.

B. Furnish and install a separate and independent raceway system as shown on the Drawings for each of the various wiring systems including, but not limited to, the following:

Communications System
Control Wiring
Fire Alarm System
Lighting
Power 120/208 volt
Power 277/480 volt

C. All raceway systems shall be completely wired as specified herein, shown on drawings and/or required for satisfactory operation of the various systems.

D. Raceways, generally, shall be concealed conduit as specified herein. Where wiring troughs are required or used to facilitate the wiring installation, they shall be equal to Square D Company's Square-Duct and fittings, with hinged cover arranged for total removal, all finished in baked enamel and all components U/L listed. The gutters shall be of ample size to accommodate conductors therein and as required by the NEC.

E. Underground conduits for services outside of building and entrance into building shall be as specified herein.

F. Support all conduit not embedded in concrete or masonry such that strain is not transmitted to outlet boxes and pull/junction boxes, etc. Supports to be sufficiently rigid to prevent distortion of conduits during wire pulling.

G. Minimum Raceway Size:

1. 3/4-inch trade size for interior work

2. 1-inch trade size for exterior underground work.

H. Conceal conduit and EMT, unless otherwise indicated, within finished walls, ceilings, and floors.

I. Communications, ATC (Automatic Temperature Control), and Fire Alarm system wiring shall be installed in raceways where exposed, above inaccessible (hard) ceilings, and within wall partitions. Raceways in wall partitions shall terminate 8" above ceiling with 90 degree bend with insulating bushing on the end.

J. Wiring above ceiling shall be plenum rated cable, where required by Code.

K. Wiring installed concealed above hard ceilings and exposed in areas with no ceilings shall be installed in conduit.

L. Conduit shall be run concealed wherever possible, within walls, ceilings, or floors, unless otherwise indicated or specified. Where exposed conduits runs are shown or required, they shall be run parallel to building construction and shall be suitably supported at required intervals.

M. Conduit may be run exposed in Mechanical Equipment rooms, Electrical rooms, and where necessary in Storage rooms and unfinished areas. Where conduit is run exposed, it shall be run as close as possible to walls and ceilings and shall not interfere with equipment, ductwork and piping.

N. Keep raceways at least 12 inches (300 mm) away from parallel runs of flues, steam or hot-water pipes and other hot surfaces above 77 degrees F. Install horizontal raceway runs above water and steam piping.

O. Install raceways level and square and at proper elevations. Provide adequate headroom.

P. Complete raceway installation before starting conductor installation.

Q. Support raceways as specified in Division 26 Section "Hangers and Supports". Arrange supports to prevent misalignment during wiring installation.

R. Use capped bushings or "push-penny" plugs to prevent foreign matter from entering the conduit system during construction. Clean and plug or cap all conduits left empty for future use.

S. Make bends and offsets so the inside diameter is not reduced. Keep legs of bends in the same plane and straight legs of offsets parallel, unless otherwise indicated.

T. Use raceway fittings compatible with raceways and suitable for use and location. For intermediate steel conduit, use threaded rigid steel conduit fittings, unless otherwise indicated.

U. Run concealed raceways, with a minimum of bends, in the shortest practical distance considering the type of building construction and obstructions, unless otherwise indicated.

V. Install exposed raceways parallel to or at right angles to nearby surfaces or structural members, and follow the surface contours as much as practical.

W. Run parallel or banked raceways together, on common supports where practical.

X. Make bends in parallel or banked runs from same centerline to make bends parallel. Use factory elbows only where elbows can be installed parallel; otherwise, provide field bends for parallel raceways.

Y. Join raceways with fittings designed and approved for the purpose and make joints tight.

1. Make raceway terminations tight. Use bonding bushings or wedges at connections subject to vibration. Use bonding jumpers where joints cannot be made tight.

2. Use insulating bushings to protect conductors.

Z. Tighten set screws of threadless fittings with suitable tools.

AA. Install pull wires in empty raceways. Use 14 AWG zinc-coated steel or monofilament plastic line with not less than 200-lb (90-kg) tensile strength. Leave at least 12 inches (300 mm) of slack at each end of the pull wire.

BB. Lubricants for pulling wires shall be approved for use with the types of wire and conduit installed.

CC. Use conduit hubs or sealing lock nuts to fasten conduit to boxes in damp and wet locations.

DD. Install no more than equivalent of three 90° bends between boxes. Use conduit bodies to make sharp changes in direction, as around beams. Use factory elbows for bends in metal conduit larger than 2 inches (50 mm) in size.

EE. Avoid moisture traps; provide junction box with drain fittings at low points in conduit system.

FF. Die-cast fittings of pot metal will not be accepted.

GG. Conduits shall be free of any burrs, foreign objects, and water prior to conduit installation.

HH. Conduit placed against concrete or masonry above ground shall be fastened to the concrete or masonry with pipe straps or one screw clamp attached to the concrete by means of expansion screw anchors and screws. "Caddy Clip" type hangers or straps will be permitted only in non-exposed areas and restricted to 3/4" conduit.

II. Rigid conduit or Electrical Metallic Tubing (EMT) shall not be strapped or fastened to equipment subject to vibration or mounted on shock-absorbing bases.

JJ. Conduit shall be installed in such manner as to ensure against the collection of trapped condensation, and runs of conduit shall be without traps wherever possible. Drill 1/8" diameter weep holes where necessary.

KK. Conduits run to and from cabinets shall be run neatly, in accurate manner and shall emerge from the floors and ceilings at right angles thereto.

LL. Exposed conduit installed on or adjacent to ventilating ducts shall be installed after the ducts are in place, and shall be run from ceiling or wall junction boxes in such manner as to retain accessibility to junction box covers and to permit future removal or replacement of ducts.

MM. Conduits and other electrical items shall not be fastened to, or supported from ventilating ducts but shall be separately supported. The method of supporting and details of the supporting members shall be reviewed by the Owner's Representative. In no case shall screws penetrate the sheet metal of the ducts.

NN. Exposed conduit run on surface shall be supported according to Code and within three feet of each outlet, junction box, or cabinet, by galvanized malleable conduit clamps and clamp backs. Suspended conduits shall be supported every five feet by conduit hangers and round

rods, or where two or more conduits are run parallel, by trapeze hangers suitably braced to prevent swaying.

OO. Screws for all work in damp/wet locations shall be stainless steel, unless otherwise noted.

PP. Zinc coated galvanized steel screws may be used for interior dry locations only.

QQ. No running threads shall be cut or used.

RR. Conduits which are installed at this time and left empty for future use and which are five feet or more in length, including all telephone and communication conduits shall have a non-ferrous, 600 lb. tensile strength drag line left in place for future use. All empty conduits including conduit stubs shall be tagged at all exposed ends with tags identifying the location of the end of the conduit.

3.4 INSTALLATION OF BOXES

A. Provide grounding connections for raceway, boxes, and components as indicated and instructed by manufacturer. Tighten connectors and terminals, including screws and bolts, according to equipment manufacturer's published torque-tightening values for equipment connectors.

B. Provide junction boxes, pull boxes, cable support boxes, and wireways as required for proper installation of the electrical work. Covers shall be accessible. Small junction boxes shall be similar to outlet boxes. Provide barriers (separators) where different system voltage wires share the same box.

C. Pull boxes, cable support boxes, and large junction boxes for indoor use shall be made of Code gauge steel or no less than 12 gauge. Covers shall be held in place with zinc-coated galvanized steel screws. Paint interior and exterior surfaces with rust-inhibitive paint. (Pull boxes and covers shall be hot-dipped galvanized.)

D. Boxes located outdoors and in damp or wet locations shall be cast metal or alloy, fitted with screw-fastened covers and gaskets, and with threaded conduit connections. Fasteners shall be stainless steel.

E. Pull boxes shall be installed at all necessary points to facilitate pulling of wires and to prevent injury to the insulation or other damage that might result from pulling resistance or for other reasons necessary for proper installation. Pull box locations shall be approved by the Owner's representative prior to installation.

F. Where boxes are used in connection with exposed conduit, plain covers attached to the box with a suitable number of countersunk flat head machine screws shall be used.

G. Pull boxes with barriers shall have a single cover plate and the barriers shall be of the same gauge as the pull box.

H. Exposed pull boxes will not be permitted in finished spaces.

I. Location of pull boxes shall be coordinated with piping, ductwork, and other equipment so as to permit sufficient clearance for maintenance and access.

J. Outlet boxes and covers shall be of proper Code size for the number of wires and/or conduits passing through or terminating therein, but in no case shall any box be less than 4" square.

K. Outlet boxes for switches shall be of the gang type.

L. Each circuit in each pullbox shall be marked with a tag guide denoting panels to which they connect.

M. Boxes shall be separated to prevent sound transmission. Back-to-back boxes shall not be used.

N. Outlet boxes shall be provided with suitable plaster rings and covers or plates.

O. Unused knockout holes shall remain closed and those opened by error shall be closed with approved factory-made knock-out seals.

P. Outlet boxes installed in plenum ceilings shall be in accordance with applicable codes.

Q. Outlet boxes shall be installed true and plumb so that the covers or plates will be level and at uniform elevations for the types of outlets contained.

R. Outlet box locations as indicated shall be considered to be approximate only. Determine exact locations from architectural details or from field instructions and coordinate outlet box locations with the work of other trades.

S. Install junction and pull boxes to be accessible.

T. Locations of junction and pull boxes requiring access panels shall be reviewed by the Owner's Representative.

U. Install hinged-cover enclosures and cabinets plumb. Support at each corner at minimum.

3.5 INSTALLATION OF TERMINATIONS

A. Where raceways are terminated with lock nuts and bushings, align the raceway to enter squarely, and install the lock nuts with dished part against the box. Where terminations cannot be made secure with one lock nut, use two lock nuts, one inside and one outside of the box.

B. Where terminating in threaded hubs, screw the raceway or fitting tight into the hub so the end bears against the wire protection shoulder. Where chase nipples are used, align the raceway so the coupling is square to the box, and tighten the chase nipple so no threads are exposed.

C. Open ends shall be capped with approved manufactured conduit seals as soon as installed and kept capped until ready to pull in conductors.

D. Where conductors enter a raceway, cabinet, pull box, and junction box, the conductors shall be protected by an insulated bushing providing a smoothly rounded surface.

E. Double lock nuts shall be used at termination of rigid conduit in knock-out openings.

F. Ends of conduits shall be equipped with insulating bushings for 1" and smaller, and insulated metallic bushings for 1-1/4" and larger. Ends of conduit shall be temporarily capped prior to installation and during construction to exclude foreign material.

3.6 FLEXIBLE CONNECTIONS

A. Provide Liquidtight Flexible Metal Conduit (LFMC), e.g. Sealtite, in short lengths (maximum 6 feet) for the final connection of exterior equipment, motors and equipment in damp or wet locations as defined in Division 26 Section “Common Work Results for Electrical”.

B. Grounding conductors with green colored insulation shall be extended through all flexible connections including fixture "whips", and fastened to terminals within the first junction boxes on either side of the flexible length.

C. Flexible connections shall be sized per the Contract Drawings, or as required in accordance with Code; the more stringent requirement shall apply.

3.7 PAINTING AND FINISHES

A. All exterior equipment and conduits shall be painted to match adjacent surface in color as selected by Owner.

B. All exposed conduit, boxes, equipment, etc. in finished spaces shall be painted. Colors shall be as selected by the Owner and conform to ANSI Standards.

C. Conduit and boxes for fire alarm cabling and devices shall be red, except for finished locations, where they shall be painted to match adjacent surfaces.

3.8 PROTECTION

A. Provide final protection and maintain conditions, in a manner acceptable to Manufacturer and Installer that ensure coatings, finishes, and cabinets are without damage or deterioration at the time of Substantial Completion.

B. Repair damage to galvanized finishes with zinc-rich paint recommended by manufacturer.

C. Repair damage to PVC or paint finishes with matching touchup coating recommended by manufacturer.

D. Steel conduit: Conduit that shows corrosion within the guarantee period shall be replaced.

3.9 CLEANING

A. On completion of installation, including outlet fittings and devices, inspect exposed finish. Remove burrs, dirt, and construction debris and repair damaged finish, including chips, scratches, and abrasions.

B. After conduits and accessories have been installed, and concreting operations completed, conduit runs shall be satisfactorily cleared of obstructions and foreign matter. Defects which might damage cable upon installation shall be corrected. Where new conduits installed are connected to existing conduits the entire run to the nearest box or other termination point shall be cleaned.

END OF SECTION

DIVISION 26
SECTION 260534
SURFACE METAL RACEWAY
TABLE OF CONTENTS

PART 1 GENERAL

1.1 RELATED DOCUMENTS
1.2 SCOPE
1.3 CLASSIFICATION AND USE
1.4 SUBMITTALS

PART 2 PRODUCTS

2.1 MANUFACTURERS
2.2 MATERIALS
2.3 SINGLE-CHANNEL SURFACE METAL RACEWAY - POWER
2.4 SINGLE-CHANNEL SURFACE METAL RACEWAY – COMMUNICATIONS/CONTROL

PART 3 EXECUTION

3.1 INSTALLATION
3.2 REMODELING WORK
3.3 PAINTING AND FINISHES

SECTION 260534 – SURFACE METAL RACEWAY

PART 1 GENERAL

1.1 RELATED DOCUMENTS

A. Drawings and General Provisions of the Contract, including General and Supplementary Conditions and Division 01 Specification Sections, apply to this Section.

1.2 SCOPE

A. This specification covers a surface metal raceway systems used for branch circuit wiring or data network, voice, video and other low-voltage wiring. The metal raceway systems shall consist of raceway, appropriate fittings and device boxes to complete installation per the Electrical Drawings.

B. In finished spaces, where conduit cannot be concealed and/or routed through existing walls, surface metal raceway shall be used. This applies to devices and equipment under Division 23 (e.g. thermostats, humidistats, control wiring, etc…), Division 26 (e.g. receptacles, switches, branch circuit wiring, etc…), Division 27 (data/voice outlets, communications cabling, etc…), and Division 28 (e.g. fire alarm devices, cabling, etc…)

C. The contractor shall visit the job site prior to submitting a bid to determine existing wall types and locations.

1.3 CLASSIFICATION AND USE

A. Surface metal raceway is to be utilized in dry interior locations only as covered in Article 386 of the National Electrical Code, as adopted by the National Fire Protection Association and as approved by the American National Standards Institute. Surface metal raceway systems shall be listed by Underwriters Laboratories under File Nos. E4376 Guide RJBT and E41751 Guide RJPR.

1.4 SUBMITTALS

A. Shop Drawings: Submit drawings for approval showing the complete layout of all products that make up the complete system for each floor prior to installation with raceway lengths, device type (power, voice video, data), locations and circuits identified.

B. As-Built Drawings: If variations from approved shop drawings occur during the installation of the systems, final As-Built Drawings shall be submitted for each floor that has been altered.

C. Submittals shall include catalog cuts of mounting devices, material sections, accessories, internal area descriptions, and wiring capacity charts. Submit sample of finish colors for final selection and approval.

PART 2 PRODUCTS

2.1 MANUFACTURERS

A. The surface metal raceway system specified herein for branch circuit wiring or data network, voice, video and other low-voltage wiring shall be manufactured by The Wiremold Company, Hubbell, or Steel City. Systems of other manufacturers may be considered equal if, in the opinion, and the written approval of the Engineer, they meet all the performance standards specified herein.

2.2 MATERIALS

A. The raceway and all system components must be UL Listed. They shall be manufactured of steel; zinc plated, galvanized and/or finished in ivory ScuffCoat™ (a polyester topcoat over ivory base) and shall be suitable for field repainting to match surroundings.

2.3 SINGLE-CHANNEL SURFACE METAL RACEWAY - POWER

A. Description: The raceway shall be a one-piece design with a base and cover factory assembled. Nominal raceway dimensions shall be 3/4" wide by 21/32" deep, with an approximate cross-sectional area of 0.30 square inches. The raceway base and cover shall have an approximate thickness of 0.040". The raceway shall be available in five and ten foot lengths.

B. Fittings: A full complement of fittings must be available including but not limited to mounting clips and straps, couplings, flat, internal and external elbows, cover clips, tees, entrance fittings, conduit connectors and bushings. The covers shall be painted with an enamel finish, ivory in color to match the raceway. They shall overlap the raceway to hide uneven cuts. All fittings shall be supplied with a base where applicable. A transition fitting shall be available to adapt to other raceways.

C. Device Boxes:

1. Device boxes shall be available for mounting standard devices and faceplates. A device box shall be available in single- and multiple-gang configurations, up to six-gang. Single-gang boxes shall allow for snap-on and fastener application. Minimum depth shall be 2-1/4".

2. Provide extra deep boxes (nominal 4” depth) where required to accommodate large devices.

3. Extension boxes shall be available to adapt to existing standard flush switch and receptacle boxes.

4. Round fixture and extension boxes shall be available to mount fixtures and other devices with mounting centers of 1-15/32", 1-5/8", 1-23/32", 1-27/32", 2-3/4", 3-1/2" and 4-1/16" diameters. Round fixture and extension boxes shall be available in depths ranging from 0.47" to 1.00" and in diameters of 3.00", 4.75", 5.50" and 6.38".

5. All device and fixture box covers shall be painted with an enamel finish, ivory in color to match the raceway cover.

D. Basis of Design: Wiremold V700 Series raceway with 5700 Series device boxes.

2.4 SINGLE-CHANNEL SURFACE METAL RACEWAY – COMMUNICATIONS/CONTROL

A. Description: The raceway shall be a two-piece design with a base and cover factory assembled. Nominal raceway dimensions shall be 1-9/32" wide by 3/4" deep with an approximate cross sectional area of 0.80 square inches. The raceway base and cover shall have an approximate thickness of 0.040" and 0.025", respectively. The raceway shall be available in 5' lengths.

B. Fittings: A full complement of fittings must be available including but not limited to mounting clips and straps, couplings, flat, internal and external elbows, cover clips, tees, entrance fittings, conduit connectors and bushings. The covers shall be painted with an enamel finish, ivory in color to match the raceway. They shall overlap the raceway to hide uneven cuts. All fittings shall be supplied with a base where applicable. A transition fitting shall be available to adapt to other raceways.

C. Device Boxes:

1. Device boxes shall be available for mounting standard devices and faceplates. A device box shall be available in single-gang and two-gang configurations. Minimum depth shall be 1-3/4".

2. Provide extra deep boxes (nominal 4” depth) where required to accommodate larger devices, e.g. fire alarm notification devices.

3. Device boxes shall function as an extension box by removal of a rectangular knockout in the base.

4. All device and fixture box covers shall be painted with an enamel finish, ivory in color to match the raceway cover.

D. Communication Devices and Accessories:

1. The raceway manufacturer will provide a complete line of connectivity outlets and modular inserts for UTP/STP, Fiber Optic, Coaxial and other cabling types with face plates and bezels to facilitate mounting.

2. A complete line of preprinted station and port identification labels, snap-in icon buttons as well as write-on station identification labels shall be available.

E. Basis of Design: Wiremold 2000 Series raceway with 2000 Series device boxes.

PART 3 EXECUTION

3.1 INSTALLATION

A. Prior to and during installation, refer to system layout or approval drawings containing all elements of the system. Installer shall comply with detailed manufacturer's instruction sheets

which accompany system components as well as complete system instruction sheets, whichever is applicable.

B. Mechanical Security: All raceway systems shall be mechanically continuous and connected to all electrical outlets, boxes, device mounting brackets, and cabinets, also in accordance with manufacturer's installation sheets.

C. Electrical Security: All metal raceway shall be electrically continuous and bonded in accordance with the National Electrical Code for proper grounding.

D. Raceway Support: Raceway shall be securely supported at intervals not exceeding 10 feet or in accordance with manufacturer's installation sheets.

E. Completeness: All raceway systems shall be installed complete, including insulating bushings and inserts, appropriate fittings, and mounting hardware. All unused raceway openings shall be closed. All fittings shall be furnished by the raceway manufacturer.

F. Provide grounding per the National Electrical Code and Local Codes. Maintain grounding continuity between raceway components to provide a continuous grounding path.

G. All surface metal raceways shall be installed parallel with and perpendicular to the structure. All exposed edges where field cut, shall be coated by the Contractor to prevent corrosion, and field-painted to match surface raceway finish.

H. Field cut straight cover sections between specific device covers.

I. Use flat-head screws to fasten channel to surfaces. Mount plumb and level. Channels shall be secured at least every four feet (1220mm) with two-hole straps.

J. Use suitable insulating bushings and inserts at connections to outlets and corner fittings.

K. Fastener Option: Use clips and straps suitable for the purpose.

L. Raceway surfaces damaged during installation shall be touched up with raceway manufacturer's matching paint.

M. Provide UL-approved expansion fittings, complete with grounding jumpers, where raceways cross building expansion joints.

N. Allow a minimum of 6-inches (152 mm) clearance from heat sources.

O. Surface raceways shall be visually seamless, without gaps between sections. Gaps exceeding the width of 1/16-inch shall be corrected to reduce width of gap.

P. Cut ceiling tiles tight to surface raceway, within a ¼-inch tolerance. Ceiling tile not cut tight to raceway shall be replaced at Contractor's expense.

Q. Provide manufacturer's touch-up paint. Paint all screws and scratches to match surface raceway.

3.2 REMODELING WORK

A. Surface metal raceway shall only be utilized where devices and/or wiring cannot be concealed in existing walls, unless otherwise indicated on the Contract Documents.

1. New devices installed in existing metal stud/GWB walls shall be cut in with conduit/wiring concealed within the wall.

2. New devices installed on existing CMU walls, where devices cannot be concealed, shall be installed in surface-mounted device boxes as specified in this section served by surface metal raceway as specified in this Section.

B. Exposed wiring on existing walls in finished areas, such as classrooms, offices, corridors, toilets, etc., shall be installed in surface metal raceways. The exposed raceways shall be run in corners, beneath chalk and tackboard frames, adjacent to door trims, and in other ways to be as inconspicuous as possible, even when requiring additional lengths.

C. All exposed raceways shall be painted to match adjacent surface(s) unless otherwise directed by the Owner.

D. All exposed raceways shall be installed in a manner approved by the Architect/Engineer.

E. The exposed runs shall not be across an open wall surface.

F. Horizontal runs of raceways shall be kept to an absolute minimum. Exposed raceway shall be run vertically into ceiling spaces above and below.

3.3 PAINTING AND FINISHES

A. All exposed surface raceway, boxes, etc. in finished spaces shall be painted to match adjacent surfaces. Colors shall be as selected by the Owner and shall conform to ANSI Standards.

END OF SECTION

DIVISION 26
SECTION 260553
ELECTRICAL IDENTIFICATION
TABLE OF CONTENTS

PART 1 GENERAL

1.1 RELATED DOCUMENTS
1.2 SUMMARY
1.3 SUBMITTALS
1.4 QUALITY ASSURANCE

PART 2 PRODUCTS

2.1 RACEWAY AND CABLE LABELS
2.2 WIRING DEVICE FACEPLATE LABELS
2.3 EQUIPMENT NAMEPLATES
2.4 SAFETY SIGNS
2.5 MISCELLANEOUS IDENTIFICATION PRODUCTS

PART 3 EXECUTION

3.1 INSTALLATION

SECTION 260553 - ELECTRICAL IDENTIFICATION

PART 1 GENERAL

1.1 RELATED DOCUMENTS

A. Drawings and general provisions of the Contract, including General and Supplementary Conditions and Division 01 Specification Sections, apply to this Section.

1.2 SUMMARY

A. This Section includes electrical identification materials and devices required to comply with ANSI C2, NFPA 70, OSHA standards, and authorities having jurisdiction.

B. This section includes labeling of all terminations and related subsystems; including, but not limited to, nameplates, wire and cable markers, labeling and identification of cables, equipment and other products.

1.3 SUBMITTALS

A. Product Data: For each electrical identification product indicated.

B. Schedule of Nomenclature: An index of electrical equipment and system components used in identification signs and labels. Provide a schedule of nameplates.

1.4 QUALITY ASSURANCE

A. Comply with ANSI C2.

B. Comply with NFPA 70.

C. Comply with ANSI A13.1 and NFPA 70 for color-coding.

D. Comply with applicable EIA/TIA Standards.

E. Comply with OSHA Standards.

PART 2 PRODUCTS

2.1 RACEWAY AND CABLE LABELS

A. Comply with ANSI A13.1, Table 3, for minimum size of letters for legend and for minimum length of color field for each raceway and cable size.

1. Color: Black letters on orange field.

2. Legend: Indicates voltage and service as well as circuit designation for all feeders.

B. Adhesive Labels: Preprinted, flexible, self-adhesive vinyl with legend, overlaminated with a clear, weather- and chemical-resistant coating.

C. Pretensioned, Wraparound Plastic Sleeves: Flexible, preprinted, color-coded, acrylic band sized to suit the diameter of the line it identifies and arranged to stay in place by pretensioned gripping action when placed in position.

D. Colored Adhesive Tape: Self-adhesive vinyl tape not less than 3 mils thick by 3/4 inch wide, in appropriate colors for system voltage and phase.

E. Tape Markers: Vinyl or vinyl-cloth, self-adhesive, wraparound type with preprinted numbers and letters.

2.2 WIRING DEVICE FACEPLATE LABELS

A. Adhesive Labels:

1. Thermal transfer printable, clear polyester material with glossy finish, 1/2" high, width as required. Printed lettering shall be 1/4" high black text.

2. Labels shall be backed with permanent acrylic adhesive and shall exhibit good adhesion to many metal and other types of surfaces, including textured surfaces and low surface energy plastics.

3. Labels shall be resistant to humidity, temperature and UV light.

4. Labels shall meet requirements of UL 969 *Labeling and Marking Standard* and shall be RoHS compliant.

5. Provide Brady B-432 Series, or approved equal by acceptable manufacturer.

2.3 EQUIPMENT NAMEPLATES

A. General Nameplate Requirements:

1. Use colors prescribed by ANSI A13.1, NFPA 70 and as follows:

a. Normal Power System: White lettering on black background.

2. Backed with adhesive material formulated for the type of surface, intended use and installed location.

B. Nameplates for Dry, Interior Locations:

1. Engraving stock, melamine 3-layer plastic laminate.

2. Minimum 1/16-inch (1.6-mm) thick for signs up to 20 sq. inches (129 sq. cm)

3. Minimum 1/8-inch (3.2-mm) thick for signs larger than 20 sq. inches.

C. Nameplates for Damp/Wet Interior and Exterior Locations:

1. Weather-resistant, UV Resistant, minimum 1/8-inch (3.2-mm) thick.

D. Refer to Contract Drawings for typical nameplate details.

E. Refer to Paragraph "Equipment Identification Nameplates" under Part 3 of this Section for installation requirements.

2.4 SAFETY SIGNS

A. Comply with 29 CFR, Chapter XVII, Part 1910.45.

2.5 MISCELLANEOUS IDENTIFICATION PRODUCTS

A. Cable Ties: Fungus-inert, self-extinguishing, one-piece, self-locking, Type 6/6 nylon cable ties.

1. Minimum Width: 3/16 inch (5 mm).

2. Tensile Strength: 50 lb (22.3 kg) minimum.

3. Temperature Range: Minus 40 to plus 185 deg F (Minus 40 to plus 85 deg C).

4. Color: According to color-coding.

B. Paint: Formulated for the type of surface and intended use.

1. Primer for Galvanized Metal: Single-component acrylic formulated for galvanized surfaces.

2. Primer for Concrete Masonry Units: Heavy-duty-resin block filler.

3. Primer for Concrete: Clear, alkali-resistant, binder-type sealer.

4. Enamel: Silicone-alkyd or alkyd urethane as recommended by primer manufacturer.

PART 3 EXECUTION

3.1 INSTALLATION

A. General:

1. Where mixed voltages are used in one building (e.g., 480 volts, 208 volts), each piece of equipment, including but not limited to, safety switches, outlet/pull/junction boxes, etc., on each system must be labeled for voltage in addition to other requirements listed herein.

2. Before attaching labels, clean all surfaces with the label manufacturer's recommended cleaning agent.

3. Install all labels firmly, as recommended by the label manufacturer.

4. Labels attached to wiring device faceplates and electrical equipment shall be installed plumb and neatly on all equipment.

5. Install nameplates parallel to equipment lines.

6. Secure nameplates to equipment fronts unless otherwise noted.

7. Secure nameplate to inside of recessed panelboards in finished locations.

8. Embossed tape will not be permitted for any application.

9. Stenciling is prohibited.

10. Labels: All labels shall be permanent and be machine-generated. NO HANDWRITTEN OR NON-PERMANENT LABELS SHALL BE ALLOWED.

11. Label size shall be appropriate for the conductor/cable size(s), and wiring device faceplate layout. All labels to be used shall be self-laminating, white/transparent vinyl and be wrapped around the cable sheath. Flag type labels are not allowed. The labels shall be of adequate size to accommodate the circumference of the cable being labeled and properly self-laminated over the full extent of the printed area of the label.

B. Panelboard Circuit Directories:

1. Panelboards shall be equipped with equipment nameplates as specified in paragraph "Equipment Identifications Labels" in this Section.

2. Panelboards shall have accurate typed circuit directories indicating exactly what each branch circuit serves.

3. The Contractor shall provide up to date circuit directories in new and existing panelboards, indicating all deletions and additions, and to note the date of all changes on the directory.

4. The circuit directories shall reflect the actual room numbers. Directories indicating the reference room numbers on the contract drawings or in the panelboard schedule shall not be acceptable.

5. The circuit directories shall include the name, address, and contact information for the Electrical/Division 26 Contractor.

6. If at anytime after occupancy the circuit directories are found to be incorrect due to negligence by the installer, then the Contractor shall trace out circuits, and correct the directories at no additional cost to the Owner.

C. Miscellaneous Identification:

1. Individual circuit breakers, switches, and motor starters in and switchboards, and in motor control centers: 1/4-inch text (6 mm); identify circuit and load served, including location.

2. Individual circuit breakers, enclosed switches, and motor starters: 1/4-inch text (6 mm); identify load served, circuit and voltage.

3. Junction boxes: 1/4-inch text (13 mm); identify load served, circuit and voltage.

D. Identification Materials and Devices: Install at locations for most convenient viewing without interference with operation and maintenance of equipment.

E. Lettering, Colors, and Graphics: Coordinate names, abbreviations, colors, and other designations with corresponding designations in the Contract Documents or with those required by codes and standards. Use consistent designations throughout Project.

F. Sequence of Work: If identification is applied to surfaces that require finish, install identification after completing finish work.

G. Self-Adhesive Identification Products: Clean surfaces before applying.

H. Install painted identification according to manufacturer's written instructions and as follows:

1. Clean surfaces of dust, loose material, and oily films before painting.

2. Prime surfaces using type of primer specified for surface.

3. Apply one intermediate and one finish coat of enamel.

I. Caution Labels for Boxes and Enclosures: Install pressure-sensitive, self-adhesive labels identifying system voltage with black letters on orange background. Install on exterior of door or cover. Install label on inside face of door or cover in finished spaces.

J. Circuit Identification Labels on Boxes: Install labels externally.

1. Exposed Boxes: Pressure-sensitive, self-adhesive plastic label on cover.

2. Concealed Boxes: Plasticized card-stock tags.

3. Labeling Legend: Permanent, waterproof listing of panel and circuit number or equivalent.

K. Secondary Service, Feeder, and Branch-Circuit Conductors: Color-code throughout the secondary electrical system. Refer to Division 26 Section “Conductors and Cables” for additional requirements.

L. Power-Circuit and Control Wire Identification: Metal tags or aluminum, wraparound marker bands for each conductor, cables, feeders, and power circuits in vaults, panelboard gutters, outlet boxes, junction boxes, pullboxes, switchboard rooms, and at load connections.

Identify with branch circuit or feeder number for power and lighting circuits and with control wire number as indicated on equipment manufacturer's shop drawings for control wiring.

1. Legend: 1/4-inch- (6.4-mm-) steel letter and number stamping or embossing with legend corresponding to indicated circuit designations.

2. Tag Fasteners: Nylon cable ties.

3. Band Fasteners: Integral ears.

M. Apply identification to conductors as follows:

1. Conductors to be Extended in the Future: Indicate source and circuit numbers.

2. Multiple Power or Lighting Circuits in the Same Enclosure: Identify each conductor with source, voltage, circuit number, and phase. Use color-coding to identify circuits' voltage and phase.

3. Multiple Control and Communication Circuits in the Same Enclosure: Identify each conductor by its system and circuit designation. Use a consistent system of tags, color-coding, or cable marking tape.

N. Apply warning, caution, and instruction signs as follows:

1. Warnings, Cautions, and Instructions: Install to ensure safe operation and maintenance of electrical systems and of items to which they connect. Install engraved plastic-laminated instruction signs with approved legend where instructions are needed for system or equipment operation. Install metal-backed butyrate signs for outdoor items.

O. Equipment Nameplates:

1. Install on each unit of equipment, including central or master unit of each system. This includes power, lighting, communication, signal, and alarm systems, unless units are specified with their own self-explanatory identification.

2. Install on each piece of equipment provided with factory installed disconnecting means, e.g. ERV units, where a separate external disconnecting means is not provided under Division 26.

3. Unless otherwise noted, nameplates shall identify equipment designation(s), voltage rating, and source (including source locations).

4. Nameplates for disconnect switches, motor starters, etc…, shall indicate the designation of the load served as the “equipment designation”.

5. In general, nameplates requiring one or two lines of text shall be 1-1/2 inches high. Labels requiring three lines of text shall be 2 inches high. The first line of text, which shall indicate equipment designation/load served, shall utilize ½ inch high lettering. Remaining lines of text, which shall indicate voltage ratings and source

information shall utilize ¼ inch high lettering. Refer to the Drawings for nameplate examples.

6. Apply nameplates to each unit of the following categories of equipment:

   a. Panelboards.

   b. Disconnect Switches.

   c. Motor Controllers.

   d. Electrical Cabinets and Enclosures.

   e. Access Doors and Panels for Concealed Electrical Items.

P. Fire Alarm: Junction box covers shall be painted red, except in finished spaces where they shall be painted to match adjacent surfaces. Box covers shall have a type written label to read "Fire Alarm" in accordance with requirements of NFPA 72.

Q. Surfaces shall be cleaned and painted, if specified, before applying markings.

R. Place markings so that they are visible from the floor.

S. Protect finished identification to ensure that markings are clear and legible when project is turned over to the Owner.

END OF SECTION

DIVISION 26
SECTION 262726
WIRING DEVICES
TABLE OF CONTENTS

PART 1 GENERAL

1.1 RELATED DOCUMENTS
1.2 SUMMARY
1.3 DEFINITIONS
1.4 SUBMITTALS
1.5 QUALITY ASSURANCE
1.6 COORDINATION

PART 2 PRODUCTS

2.1 MANUFACTURERS
2.2 STRAIGHT BLADE RECEPTACLES
2.3 GFCI RECEPTACLES
2.4 SWITCHES
2.5 FINISHES
2.6 DEVICE PLATES

PART 3 EXECUTION

3.1 EXAMINATION
3.2 INSTALLATION – GENERAL
3.3 INSTALLATION – RECEPTACLES
3.4 IDENTIFICATION
3.5 CONNECTIONS
3.6 FIELD QUALITY CONTROL
3.7 CLEANING

SECTION 262726 - WIRING DEVICES

PART 1 GENERAL

1.1 RELATED DOCUMENTS

A. Drawings and general provisions of the Contract, including General and Supplementary Conditions and Division 01 Specification Sections, apply to this Section.

1.2 SUMMARY

A. This Section includes the following:

1. Straight-blade receptacles.
2. GFCI receptacles.
3. Weather-Resistant receptacles.
4. Toggle switches.
5. Device plates.

1.3 DEFINITIONS

A. GFCI: Ground-Fault Circuit Interrupter.

B. Pigtail: Short lead used to connect a device to a branch-circuit conductor.

C. WR: Weather-Resistant.

1.4 SUBMITTALS

A. Product Data: For each product specified, indicating configurations, finishes, dimensions, and manufacturer's instructions.

B. Maintenance Data: For materials and products to include in maintenance manuals specified in Division 01.

1.5 QUALITY ASSURANCE

A. Electrical Components, Devices, and Accessories: Listed and labeled as defined in NFPA 70, Article 100, by a testing agency acceptable to authorities having jurisdiction.

B. Comply with NFPA 70.

C. Comply with NECA Standard of Installation.

D. Codes: Provide wiring devices conforming to the following:

1. American National Standards Institute (ANSI): Provide lugs and receptacle devices constructed in accordance with ANSI C73, *Attachment Plugs and Receptacles, Dimensions of.*

2. Institute of Electrical and Electronics Engineers (IEEE): Construct and install wiring devices in accordance with requirements of IEEE 241, *Recommended Practice for Electric Power Systems in Commercial Building.*

3. National Electrical Manufacturers Association (NEMA): Provide wiring devices constructed and configured in accordance with the requirements of

   a. WD1: General Requirements for Wiring Devices
   b. WD5: Special Purpose Wiring Devices
   c. WD6: Wiring Devices - Dimensional Requirements.

4. National Fire Protection Association (NFPA): Comply with NFPA 70, *National Electrical Code,* as applicable to construction and installation of electrical wiring devices.

5. Underwriters Laboratories, Inc. (UL): Provide wiring devices which are UL listed and comply with the requirements of:

   a. 20: General-Use Snap Switches.
   b. 498: Attachments, Plugs and Receptacles
   c. 514A: Metallic Outlet Boxes.
   d. 514B: Fittings for Conduit and Outlet Boxes.
   e. 514C: Non-Metallic Outlet Boxes, Flush-Device Boxes, and Covers
   f. 943: Ground-Fault Circuit Interrupters

1.6 COORDINATION

A. Receptacles for Equipment Furnished with Cord and Plug Sets: Match plug configurations.

B. Cord and Plug Sets: Match equipment requirements.

PART 2 PRODUCTS

2.1 MANUFACTURERS

A. Available Manufacturers: Subject to compliance with requirements, manufacturers offering products that may be incorporated into the Work include, but are not limited to, the following:

1. Wiring Devices:

   a. Hubbell, Inc.; Wiring Devices Division
   b. Pass & Seymour/Legrand; Wiring Devices Division
   c. Leviton Manufacturing Co., Inc.
   d. Eaton/Arrowhart; Wiring Devices Division
   e. Lutron Electronics, Inc.

2.2 STRAIGHT BLADE RECEPTACLES

A. General Requirements

1. Straight blade receptacles shall have the following basic features:

   a. One-piece brass mounting strap with integral ground for low resistance of fault currents.
   b. Auto-ground clip to assure positive ground.
   c. Impact-resistant nylon face and thermoplastic base housing.
   d. #10 large head brass terminal and ground screws; back- and side-wired.

B. Duplex Convenience Receptacles

1. Duplex convenience receptacles shall be extra heavy-duty, specification grade, 20A, 125V.

2. Comply with NEMA WD-1, NEMA WD-6 configuration 5-20R, UL 498 and Federal Specification W-C-596.

3. Hubbell HBL5362, Pass & Seymour 5362A, or approved equal by acceptable manufacturer.

C. Single Convenience Receptacles

1. Single convenience receptacles shall be extra heavy-duty, specification grade, 20A, 125V.

2. Comply with NEMA WD-1, NEMA WD-6 configuration 5-20R, UL 498 and Federal Specification W-C-596.

3. Hubbell HBL5361, Pass & Seymour 5361, or approved equal by acceptable manufacturer.

D. Special Purpose Receptacles

1. Special purpose receptacles shall have ratings and NEMA configurations as indicated on the Drawings, or as required to match equipment plug configuration, and shall be black with device plate to match outlet type.

2.3 GFCI RECEPTACLES

A. General Requirements

1. GFCI receptacles shall have the following basic features:

   a. Solid-state ground-fault sensing and signaling.
   b. Trip time of 0.025 seconds (nominal).
   c. Trip threshold of +/- 5mA.
   d. Indicator light that is lighted when device is tripped.
   e. Auto-ground clip to assure positive ground.
   f. Impact-resistant nylon face and thermoplastic base housing.
   g. #10 large head brass terminal and ground screws; back- and side-wired.

2. GFCI receptacles shall also have the following functions to comply with UL standard 943:
   a. An auto-monitoring function that will allow for periodic automatic testing (self-test) of the GFCI device and its ability to respond to a ground fault. If a problem is detected one or more of the following will happen:
      i. Power will be denied (trip with the inability to reset).
      ii. Trip with the ability to reset, subject to the next auto-monitoring test cycle or repeatedly trip.
      iii. Visual and/or audible indication
   b. Provisions to ensure that receptacle type GFCIs that contain separate line and load terminals, and that is powered through its load terminals, shall not reset and supply power to its receptacle face or line terminals if miswired. This applies both during its initial installation and after reinstallation following a correctly wired installation. If the device is provided with special instructions for removal and reinstallation, the instructions shall be followed during testing.

B. Duplex GFCI Receptacles

1. Duplex GFCI receptacles shall be extra heavy-duty, specification grade, 20A, 125V.

2. Comply with NEMA WD 1, NEMA WD 6 configuration 5-20R, UL 498 and Federal Specification W-C-596.

3. Hubbell GFRST20, Pass & Seymour 2097, or approved equal by acceptable manufacturer.

C. Weather-Resistant Duplex GFCI Receptacles

1. Weather-resistant duplex GFCI receptacles shall be extra heavy-duty, specification grade, 20A, 125V with the following features:

   a. "WR" marking on face as required by UL Standard.
   b. UV-resistant nylon face for longer life under adverse environmental conditions.

2. Comply with NEMA WD 1, NEMA WD 6 configuration 5-20R, UL 498 and Federal Specification W-C-596.

3. Hubbell GFWRST20, Pass & Seymour 2095/7TRWR, or approved equal by acceptable manufacturer.

2.4 SWITCHES

A. General Requirements

1. Switches shall have the following basic features:

   a. Heavy-gauge one-piece copper alloy contact arm.
   b. Fast "make" and positive "break" to minimize arcing.

c. Heavy-duty bumper pads for quiet operation.
d. High strength thermoplastic polycarbonate toggle.
e. Oversized silvery alloy contacts for long life and heat dissipation.
f. Nickel-plated steel strap with integral ground.
g. Auto-ground clip to assure positive ground.

B. Toggle Switches

1. Toggle switches shall be quiet-type, extra heavy-duty, horsepower-rated, industrial grade, 120/277V, 20A: Comply with NEMA WD 1, UL 20 and Federal Specification W-S-896.

2. Hubbell HBL1221 (single-pole), HBL1222 (two-pole), HBL1223 (three-way), HBL1224 (four-way), Pass & Seymour PS20AC1 (single-pole), PS20AC2 (two-pole), PS20AC3 (three-way), PS20AC4 (four-way), or approved equal by acceptable manufacturer.

C. Pilot Lighted Switches (Light On with Load On)

1. Pilot lighted switches shall be quiet-type, extra heavy-duty, horsepower-rated, industrial grade, 120/277V, 20A, with red illuminated toggle, lighted with load on.

2. Comply with NEMA WD 1, UL 20 and Federal Specification W-S-896.

3. Hubbell HBL1221PL (single-pole), HBL1222PL (two-pole), HBL1223PL (three-way), Pass & Seymour PS20AC1RPL (single-pole), PS20AC2RPL (two-pole), PS20AC3RPL (three-way), or approved equal by acceptable manufacturer.

D. Lockable Switch Handle Guards

1. Provide handle guards with provisions for padlocking at all toggle switches serving as disconnecting means and where indicated on the Drawings.

2. Handle guards shall be steel construction, and shall mount directly over standard switch faceplates.

3. Provide Square D Class 2510 FL1, or approved equal by listed manufacturer.

2.5 FINISHES

A. Wiring device catalog numbers in Section text do not designate device color. Device colors shall be as follows, unless otherwise indicated elsewhere in the Specifications and Drawings or as required by NFPA or device listing:

1. Wiring Devices connected to Normal Power System: Finish to match existing devices.

2.6 DEVICE PLATES

A. Device plates shall be provided for all switches and receptacles. Device plates shall be as manufactured to fit each type of single device, to fit devices which are ganged together, and they shall be same manufacturer as wiring devices with finish as follows:

1. Material for Unfinished Spaces: Galvanized steel, unless otherwise noted.

2. Material for Finished Spaces: 0.04-inch-thick, Type 302, satin-finished stainless steel, except as otherwise indicated.

B. Material for Damp and Wet Locations: Heavy-duty die-cast zinc/aluminum construction with gasketed, hinged lockable lid, designed to be weatherproof while the device is in use, and listed and labeled "extra duty" for use in "wet locations." All components shall have baked-on electrostatic, polyester, power paint finish for superior corrosion resistance. Covers for receptacles shall be self-closing per UL514C42.3, be equipped with stainless steel springs, and shall have a cam action latch for secure closure. Covers for toggle switches shall be equipped with actuating levers and shall mount directly over the switch. Covers for receptacles shall comply with 2011 NEC Article 406.9(B). Covers for switches shall comply with NEC Article 404.4.

1. Duplex/GFCI Receptacles - Pass & Seymour Model No. WIUCAST1 or approved equal by Hubbell, Intermatic or other listed manufacturer.
2. Toggle Switches – Crouse-Hinds Model No. DS185, or approved equal.

PART 3 EXECUTION

3.1 EXAMINATION

A. Verification of existing conditions before starting work.

B. Verification of Conditions: Verify that field measurements, surfaces, substrates and conditions are as required, and ready to receive Work.

1. Verify that outlet boxes are installed at proper height.

2. Verify that wall openings are neatly cut and will be completely covered by wall plates.

3. Verify that branch circuit wiring installation is completed, tested, and ready for connection to wiring devices.

C. By beginning Work, accepts conditions and assume responsibility for correcting unsuitable conditions encountered at no additional cost to the Owner.

3.2 INSTALLATION – GENERAL

A. Install devices and assemblies plumb, level, and secure.

B. Arrangement of Devices: Unless otherwise indicated, mount flush, with long dimension vertical, and grounding terminal of receptacles on top or as required by the local Authority Having Jurisdiction.

C. Install wall plates when painting is complete.

D. Protect devices and assemblies during painting.

3.3 INSTALLATION – RECEPTACLES

A. All 15 ampere and 20 ampere, 125 volt and 250 volt, non-locking type receptacles installed in damp or wet locations shall be listed weather-resistant type in accordance with NEC Article 406.9(A) and 406.9(B) and shall be installed within an enclosure that is weather proof when an attachment plug is inserted.

B. All 15 ampere and 20 ampere, 125 volt, single-phase, non-locking type receptacles installed in the following locations shall have GFCI protection for personnel, in accordance with NEC Article 210.8(B).

1. Rooftops

2. Outdoors

3. Within six (6) feet (1.8m) of sinks, plumbing fixtures and water piping.

4. Indoor wet locations.

5. Mechanical rooms, electrical rooms, and similar areas where electrical hand tools or portable lighting equipment are to be used.

C. Where multiple receptacles are indicated on the Contract Drawings as GFCI type receptacles, each device must be a GFCI type receptacle. Protecting standard receptacles downstream from one GFCI receptacle is not acceptable.

3.4 IDENTIFICATION

A. Comply with Division 26 Section “Electrical Identification”.

1. Switches: Where three or more switches are ganged, and elsewhere as indicated, identify each switch with approved legend engraved on wall plate. Switches shall be labeled as to lights/load controlled and with circuit number and panel identification.

2. Receptacles: All device plates shall be labeled to identify panelboard and circuit number from which served. Use machine-printed, pressure-sensitive, abrasion-resistant label tape on face of plate and durable wire markers or tags within outlet boxes. Labels shall be clear with black lettering. Protect label from damage during construction. Replace all damaged and unclear labels.

3. Mark all conductors with the panel and circuit number serving the device at the device.

4. Mark the panel and circuit number serving the device on the back side of the device plate with a permanent marking system, machine-generated, that does not show through the front of the plate.

5. Faceplate labels shall be installed such that they are readable and do not cover any portion of the faceplate securing screw(s) or the wiring device itself.

3.5 CONNECTIONS

A. Connect wiring device grounding terminal to outlet box with bonding jumper.

B. Connect wiring device grounding terminal to branch-circuit equipment grounding conductor.

C. Tighten electrical connectors and terminals according to manufacturers published torque-tightening values. If manufacturers torque values are not indicated, use those specified in UL 486A and UL 486B.

3.6 FIELD QUALITY CONTROL

A. Test wiring devices for proper polarity, continuity, short circuits, and ground continuity. Operate each device at least six times.

B. Test GFCI operation with both local and remote fault simulations according to manufacturer's written instructions.

C. Replace damaged or defective components.

3.7 CLEANING

A. Internally clean devices, device outlet boxes, and enclosures. Replace stained or improperly painted wall plates or devices.

END OF SECTION

DIVISION 26
SECTION 262813
FUSES
TABLE OF CONTENTS

PART 1 GENERAL

1.1 RELATED DOCUMENTS
1.2 SUMMARY
1.3 PERFORMANCE REQUIREMENTS
1.4 SUBMITTALS
1.5 QUALITY ASSURANCE
1.6 EXTRA MATERIALS

PART 2 PRODUCTS

2.1 MANUFACTURERS
2.2 CARTRIDGE FUSES

PART 3 EXECUTION

3.1 EXAMINATION
3.2 FUSE APPLICATIONS
3.3 INSTALLATION
3.4 IDENTIFICATION

SECTION 262813 - FUSES

PART 1 GENERAL

1.1 RELATED DOCUMENTS

A. Drawings and general provisions of the Contract, including General and Supplementary Conditions and Division 01 Specification Sections, apply to this Section.

1.2 SUMMARY

A. This Section includes the following:

1. Fuses.

B. The Electrical Contractor shall provide a complete set of fuses for all fusible equipment on the project as indicated on the Contract Documents. Final test and inspections shall be made prior to energizing the equipment.

1.3 PERFORMANCE REQUIREMENTS

A. Select fuses to provide appropriate levels of short circuit and overcurrent protection for components such as wire, cable, bus structures, and other equipment. Provide system to ensure that component damage is within acceptable levels during a fault.

B. Select fuses to coordinate with time-current characteristics of other overcurrent protective elements, such as other fuses, circuit breakers, and protective relays. Provide system to ensure that device closest to fault operates.

1.4 SUBMITTALS

A. General: Submit each item in this Article according to the Conditions of the Contract.

B. Product Data for each fuse type specified. Include the following:

1. Descriptive data and time-current curves.

2. Let-through current curves for fuses with current-limiting characteristics

C. Record the equipment nameplate rating and actual fuse rating and location of fuses on the record drawings.

1.5 QUALITY ASSURANCE

A. Source Limitations: Obtain fuses from one source and by a single manufacturer.

B. Comply with NFPA 70 for components and installation.

C. Listing and Labeling: Provide fuses specified in this Section that are listed and labeled.

1. The terms *Listed* and *Labeled* as defined in the National Electrical Code, Article 100.

2. Listing and Labeling Agency Qualifications: A *Nationally Recognized Testing Laboratory* (NRTL) as defined in OSHA Regulation 1910.7.

3. Comply with National Electrical Manufacturer's Association NEMA FU-1 *Low Voltage Cartridge Fuses.*

4. Comply with IEC269.

5. Comply with CANENA Standard 248.

6. Comply with UL 198.

1.6 EXTRA MATERIALS

A. Furnish extra materials described below that match products installed, are packaged with protective covering for storage, and are identified with labels describing contents.

1. Spare Fuses: Furnish quantity equal to 20 percent of each 600 ampere and smaller fuse type and size installed, but not less than one (1) set of three (3) of each type and size.

2. Fuse Pullers: Furnish two (2) fuse pullers.

PART 2 PRODUCTS

2.1 MANUFACTURERS

A. Available Manufacturers: Subject to compliance with requirements, manufacturers offering fuses that may be incorporated into the Work include, but are not limited to, the following:

1. Cooper Industries Inc. Bussmann Div.

2. Eagle Electric Mfg, Co. Inc.

3. General Electric Co; Wiring Devices Div.

4. Mersen (formerly Ferraz Shawmut)

5. Tracor, Inc; Littelfuse, Inc. Subsidiary

B. All fuses shall be of the same manufacturer to assure coordination.

2.2 CARTRIDGE FUSES

A. Characteristics: NEMA FU-1, nonrenewable cartridge fuse; class as specified or indicated; current rating as indicated; voltage rating consistent with circuit voltage.

B. Fuses shall feature a solid state visual open fuse indicator, metal-embossed date and catalog number for identification.

PART 3 EXECUTION

3.1 EXAMINATION

A. Examine utilization equipment nameplates and installation instructions to verify proper fuse locations, sizes, and characteristics.

B. Do not proceed with installation until unsatisfactory conditions have been corrected.

3.2 FUSE APPLICATIONS

A. Motor Branch Circuits: Class RK1, time delay, 250 Volt Class J, Time Delay 600 Volt, 0-600 Amp, and 300 kA interrupting rating. Time delay fuses shall hold 500% of rated current for a minimum of 10 seconds.

1. The following guidelines apply for motors protected by properly sized overload relays:

a. Fuses for motors with a marked service factor not less than 1.15 shall be installed in ratings of 125% of motor full-load current (or next size larger if 125 percent does not correspond to a fuse size), except where high ambient temperatures prevail, or where the motor drives a heavy revolving part which cannot be brought up to full speed quickly, such as large fans. Under such conditions, the fuses may be 150 percent to 175 percent of the motor full-load current.

b. For all other motors, (such as 1.0 service factor motors) fuses shall be sized in ratings of 115 percent of the motor full load current (or next size larger if 115 percent does not correspond to a fuse size) except as noted above.

2. The following guidelines apply where fuses are used as the only overload protection for the motor:

a. For motors with a 1.15 service factor or more, fuses should be sized at 125 percent of motor full-load current (or next size smaller if 125 percent does not correspond to a fuse size).

b. For all other motors, fuses should be sized at 115 percent of motor full-load current (or next size smaller, if 115 percent does not correspond to a fuse size.

3. Fuse sizes for motor protection shall be chosen from fuse manufacturers published data and recommendations.

B. Other Branch Circuits: Class RK1, non-time delay, 250 Volt, Class J Time Delay 600 Volt, 0-600 Amp, and 300 kA interrupting rating.

C. Control circuits and lighting: Class CC, current limiting rejection type, rated 0-30 amperes, 600 volts, and 200- kA interrupting rating.

D. Provide fuses of type and rating recommended by equipment manufacturer for packaged and/or specialized equipment.

E. Six hundred ampere or less, installed ahead of breaker: Class RK1, time delay.

F. Motor Controllers: NEMA and IEC Style motor controllers shall be protected from short-circuits by Dual-Element Time-Delay fuses in order to provide testing agency-witnessed Type 2 coordination for the controller. This provides *no damage* protection for the controller, under low and high level fault conditions, as required by IEC Publication 947-4. For IEC style controller, the fuses shall be installed in ratings to coordinate with the overload relays, such that the relay/fuse curves cross over at 7-10 times the IEC contactor current rating.

3.3 INSTALLATION

A. Fuses shall not be installed until equipment is ready to be energized. This measure prevents fuse damage during shipment of the equipment from the manufacturer to the job site, or from water that may contact the fuse before the equipment is installed. Final tests and inspections shall be made prior to energizing the equipment. This shall include a thorough cleaning, tightening, and review of all electrical connections and inspection of all grounding conductors. All fuses shall be furnished and installed by the electrical contractor. All fuses shall be of the same manufacturer.

B. Install fuses in fusible devices as indicated. Arrange fuses so fuse ratings and open fuse indicator are visible without removing fuse.

C. Provide fuse clips as required.

3.4 IDENTIFICATION

A. Install typewritten labels on inside door of each fusible disconnect switch and motor controller to indicate fuse replacement information.

END OF SECTION

DIVISION 26
SECTION 262816
DISCONNECT SWITCHES
TABLE OF CONTENTS

PART 1 GENERAL

1.1 RELATED DOCUMENTS
1.2 SUMMARY
1.3 SUBMITTALS
1.4 QUALITY ASSURANCE

PART 2 PRODUCTS

2.1 MANUFACTURERS
2.2 DISCONNECT SWITCHES

PART 3 EXECUTION

3.1 INSTALLATION
3.2 CONNECTIONS
3.3 IDENTIFICATION
3.4 FIELD QUALITY CONTROL
3.5 ADJUSTING
3.6 CLEANING

SECTION 262816 – DISCONNECT SWITCHES

PART 1 GENERAL

1.1 RELATED DOCUMENTS

A. Drawings and general provisions of the Contract, including General and Supplementary Conditions and Division 01 Specification Sections, apply to this Section.

1.2 SUMMARY

A. This Section includes individually mounted disconnect switches used for the following:

1. Equipment disconnect switches.

2. Motor disconnect switches.

B. Related Sections: The following Sections contain requirements that relate to this Section:

1. Division 26 Section, “Fuses” for fuses in fusible disconnect switches.

C. Provide method of disconnection at all appliances, motors, equipment, etc., as required to comply with NEC (including Article 422-C, and Article 440-D).

1.3 SUBMITTALS

A. General: Submit each item in this Article according to the Conditions of the Contract and Division 01 Specification Sections.

B. Product Data for disconnect switches and accessories specified in this Section. Include the following:

1. Descriptive data and time-current curves.

C. Coordination charts and tables and related data.

D. Field test reports indicating and interpreting test results.

E. Maintenance data for tripping devices to include in the operation and maintenance manual specified in Division 01.

F. Submit a schedule of equipment to indicate ratings of disconnects, fuses, and other electrical characteristics for each item of equipment.

1.4 QUALITY ASSURANCE

A. Source Limitations: Obtain disconnect switches from one source and by a single manufacturer.

B. Comply with NFPA 70 for components and installation.

C. Listing and Labeling: Provide disconnect switches specified in this Section that are listed and labeled.

1. The Terms *Listed* and *Labeled*: As defined in the National Electrical Code, Article 100.

2. Listing and Labeling Agency Qualifications: A *Nationally Recognized Testing Laboratory* (NRTL) as defined in OSHA Regulation 1910.7.

3. Underwriters Laboratories (UL) listed equipment: UL 98 - Enclosed and Dead Front Switches, UL 50 - Cabinets and Boxes, NEMA 250 - Enclosures for Electrical Equipment.

4. Comply with ANSI and NEMA Standards for materials ratings.

PART 2 PRODUCTS

2.1 MANUFACTURERS

A. Manufacturers: Subject to compliance with requirements, provide equipment from one of the following manufacturers; no other manufacturers are acceptable.

1. Disconnect/Safety Switches:

a. Square D Company. (Basis of Design)
b. Eaton Corp.; Cutler-Hammer.
c. Siemens Energy & Automation, Inc.

2.2 DISCONNECT SWITCHES

A. Enclosed, Nonfusible Switch: Heavy duty, NEMA KS 1, Type HD, with lockable handle in the *OFF* position. Switch shall be provided with an override screw to permit opening front cover with switch in *ON* position. Minimum fault current rating shall be 200,000 symmetrical rms amperes.

B. Enclosed, Fusible Switch, 800 A and Smaller: Heavy duty, NEMA KS 1, Type HD, clips to accommodate specified fuses, enclosure consistent with environment where located, handle lockable in the *OFF* position, with 2 padlocks, and interlocked with cover in CLOSED position. Switch shall be provided with an override screw to permit opening front cover with switch in *ON* position. Minimum fault current rating shall be 200,000 symmetrical rms amperes.

C. Characteristics: Size, number of poles and ratings as indicated and to match load being served.

D. Enclosure: NEMA KS 1, Type 1, with gray baked enamel finish, unless otherwise specified or required to meet environmental conditions of installed location. Enclosure shall be rated for 200,000 rms symmetrical amperes short circuit current.

1. Outdoor Locations: NEMA 3R.

PART 3 EXECUTION

3.1 INSTALLATION

A. Install disconnect switches in locations as indicated, according to manufacturer's written instructions.

B. Install disconnect switches level and plumb. Provide mounting brackets, wall bracing, and accessories as required.

C. Install disconnect switches to have adequate working space in accordance with Article 110.26 of the National Electrical Code. Disconnect switches shall not be installed beneath ductwork, piping, etc.

D. Install wiring between disconnect switches and associated control and indication devices.

E. Provide fuses for all fusible safety switches as indicated and required by the load being served. Coordinate fuse ratings with mechanical equipment electrical characteristics.

F. Provide disconnect switches for all equipment as indicated and as required by the NEC. Where disconnect switches are specified and furnished with mechanical equipment, install one only. Coordinate devices furnished for mechanical equipment with Division 23 Drawings and Specifications.

G. Weatherproof enclosures shall be provided for all disconnect switches exposed to the elements whether called for or not.

H. Disconnect Switches shall be labeled for service entrance use, if so required, where used for service entrance whether called for or not.

I. Disconnect Switches provided shall be suitable for:

1. Circuit application voltage.

2. Circuit application ampacity x 125 percent.

3. One pole, two pole, three pole, solid neutral, ground connection, all as required by item served or as shown on the drawings.

J. Install disconnect switches as indicated, complying with manufacturer's written instructions, applicable requirements of NEC, NEMA, and NECA's *Standard of Installation*, and in accordance with recognized industry practices.

3.2 CONNECTIONS

A. Connect disconnect switches and components to wiring system and to ground as indicated and instructed by manufacturer.

B. Tighten electrical connectors and terminals according to manufacturers' published torque-tightening values. Where manufacturer's torque values are not indicated, use those specified in UL 486A and UL 486B.

3.3 IDENTIFICATION

A. Identify each disconnect switch according to requirements specified in Division 26 Section, "Electrical Identification". All switches shall be provided with engraved nameplates which clearly identify the equipment served, circuit designation, and circuit voltage/phase.

B. Each disconnect means shall be legibly marked as required by Code (including integral disconnect units furnished with motors, appliances, feeders, and branch(es).

3.4 FIELD QUALITY CONTROL

A. Visual and mechanical inspection: Include the following inspections and related work.

1. Device Ratings and Settings: Verify that ratings and settings as installed are appropriate for final loads and final system arrangement and parameters. Recommend final protective-device ratings and settings where differences are found. Use accepted revised ratings or settings to make the final system adjustments. Prepare and submit the load current and overload relay heater list.

2. Inspect for defects and physical damage, NRTL labeling, and nameplate compliance with current project drawings.

3. Exercise and perform operational tests of mechanical components and other operable devices in accordance with manufacturer's instructions.

4. Check tightness of electrical connections of devices with calibrated torque wrench. Use Manufacturer's recommended torque values.

5. Clean devices using Manufacturer's approved methods and materials.

6. Verify proper fuse types and ratings in fusible devices.

7. Verify that fuses are facing out and that fuse ratings and blown fuse indicators are visible without removing fuses.

B. Electrical Tests: Upon installation of disconnect switches and before electrical circuitry has been energized, provide the following minimum inspections and tests according to manufacturer's written instructions to ensure components are operational within industry and manufacturer's tolerances, are installed according to the Contract Documents, and are suitable for energizing.

1. Inspect accessible components for cleanliness, mechanical and electrical integrity, and damage or deterioration.

2. Inspect bolted electrical connections for tightness according to manufacturer's published torque values or, if not available, those specified in UL 486A and UL 486B.

3. NETA Testing:

   a. Perform each visual and mechanical inspection and electrical test stated in NETA ATS, Section 7.5 for disconnect switches.
   b. Compare test results with specified performance or manufacturer's data. Correct deficiencies identified by tests and retest.
   c. Prepare reports identifying equipment checked and describing results of tests. Include notation of deficiencies detected, remedial action taken, and observations after remedial action.

4. Test Labeling: On satisfactory completion of tests and related effort, apply a label to tested components indicating test results, date, and responsible organization and person.

3.5 ADJUSTING

A. Adjust/replace fuses in disconnect switches if required to properly coordinate with overcurrent protection requirements of equipment served and with upstream and downstream protective devices.

3.6 CLEANING

A. After completing system installation, including outlet fittings and devices, inspect exposed finish. Remove burrs, dirt, and construction debris and repair damaged finish including chips, scratches, and abrasions.

END OF SECTION

DIVISION 26
SECTION 262913
MOTOR CONTROLLERS
TABLE OF CONTENTS

PART 1 GENERAL

1.1 RELATED DOCUMENTS
1.2 SUMMARY
1.3 DEFINITIONS
1.4 SUBMITTALS
1.5 QUALITY ASSURANCE
1.6 DELIVERY, STORAGE, AND HANDLING
1.7 PROJECT CONDITIONS
1.8 COORDINATION
1.9 EXTRA MATERIALS

PART 2 PRODUCTS

2.1 MANUFACTURERS
2.2 MANUAL MOTOR CONTROLLERS
2.3 MANUAL MOTOR SWITCHES
2.4 COMBINATION MAGNETIC MOTOR CONTROLLERS – DISCONNECT SWITCH TYPE
2.5 ENCLOSURES

PART 3 EXECUTION

3.1 APPLICATIONS
3.2 INSTALLATION
3.3 IDENTIFICATION
3.4 CONTROL WIRING INSTALLATION
3.5 CONNECTIONS
3.6 FIELD QUALITY CONTROL
3.7 CLEANING

SECTION 262913 - MOTOR CONTROLLERS

PART 1 GENERAL

1.1 RELATED DOCUMENTS

A. Drawings and general provisions of the Contract, including General and Supplementary Conditions and Division 01 Specification Sections, apply to this Section.

1.2 SUMMARY

A. This Section includes AC motor-control devices rated 600 V and less that are supplied as enclosed units.

B. Related Sections include the following:

1. Division 26 Section “Common Work Results for Electrical” for Mechanical - Electrical coordination requirements.

2. Division 26 Section “Common Work Results for Electrical” for general materials and installation methods.

3. Division 26 Section “Electrical Identification” for labeling materials.

4. Division 26 Section “Fuses” for fuses installed in combination magnetic motor controllers with fusible disconnect switches.

1.3 DEFINITIONS

A. CPT: Control power transformer.

B. N.C.: Normally closed.

C. N.O.: Normally open.

1.4 SUBMITTALS

A. Product Data: For products specified in this Section. Include dimensions, ratings, and data on features and components.

B. Field Test Reports: Indicate and interpret test results for compliance with performance requirements.

C. Maintenance Data: For products to include in the operation and maintenance manuals specified in Division 01.

D. Submit a schedule of equipment to indicate motor controller ratings, sizes, and other electrical characteristics for each item of equipment.

1.5 QUALITY ASSURANCE

A. Manufacturer Qualifications: Maintain, within 50 miles (80 km) of Project site, a service center capable of providing training, parts, and emergency maintenance and repairs.

B. Field Testing Agency Qualifications: An independent testing agency with experience and capability to satisfactorily conduct testing indicated without delaying the Work. Evaluation criteria shall be according to ASTM E 699.

C. Source Limitations: Obtain similar motor-control devices through one source from a single manufacturer.

D. Comply with NFPA 70.

E. Listing and Labeling: Provide motor controllers specified in this Section that are listed and labeled.

1. The Terms *Listed* and *Labeled*: As defined in the National Electrical Code, Article 100.

2. Listing and Labeling Agency Qualifications: A *Nationally Recognized Testing Laboratory* as defined in OSHA Regulation 1910.7.

F. UL Compliance: NEMA ICS 2, *Industrial Control Devices, Controllers and Assemblies.*

1.6 DELIVERY, STORAGE, AND HANDLING

A. Store enclosed controllers indoors in clean, dry space with uniform temperature to prevent condensation. Protect enclosed controllers from exposure to dirt, fumes, water, corrosive substances, and physical damage.

B. If stored in areas subject to weather, cover enclosed controllers to protect them from weather, dirt, dust, corrosive substances, and physical damage. Remove loose packing and flammable materials from inside controllers; install temporary electric heating, with at least 250 W per controller.

1.7 PROJECT CONDITIONS

A. Environmental Limitations: Rate equipment for continuous operation under the following conditions unless otherwise indicated:

1. Ambient Temperature: Not less than minus 22 deg F (minus 30 deg C) and not exceeding 104 deg F (40 deg C).

2. Altitude: Not exceeding 6600 feet (2010 m).

B. Interruption of Existing Electrical Systems: Do not interrupt electrical systems in facilities occupied by Owner or other unless permitted under the following conditions and then only after arranging to provide temporary electrical service according to requirements indicated:

1. Notify Owner no fewer than two days in advance of proposed interruption of electrical systems.

2. Indicate method of providing temporary utilities.

3. Do not proceed with interruption of electrical systems without Owner's written permission.

4. Comply with NFPA 70E.

1.8 COORDINATION

A. Coordinate features of controllers and accessory devices with pilot devices and control circuits to which they connect.

B. Coordinate features, accessories, and functions of each motor controller with the ratings and characteristics of the supply circuit, the motor, the required control sequence, and the duty cycle of the motor and load.

C. The horsepower rating of all starters shall be checked against actual motor to be controlled, before installation and correct size overload elements shall be provided in all starters based on nameplate and manufacturer's recommendation.

D. Provide all control devices and wiring, where not provided under Division 23, required for all equipment.

E. Motors and controllers shall be provided for voltage and current characteristics as indicated. In the event that equipment provided is of different electrical characteristics than the ones specified, any increase in electrical feeders, conduits, circuit breakers, etc., including increase of labor cost shall be the responsibility of the Contractor.

F. Provide branch circuits for all motors to the starting equipment and then to the motors, complete with all control wiring for automatic and remote control where required or noted. Conduits to motors shall terminate in the conduit fittings on the motors, the final connection being made with Liquid-Tight Flexible Metal Conduit (LFMC), Seal-tight "UA", or approved equal.

G. All conduits and wiring required for control work from the holding coil circuit of the starter, including the furnishing and installation of control devices such as auxiliary contacts, control relays, time delay relays, pilot lights, selector switches, alternators, etc., shall be provided and installed by other trades unless otherwise indicated.

H. Power Branch Circuits: Wire sizes for branch circuits not specifically called for on drawings or in Specifications shall be based on 125 percent of the full load current of the motor unless the voltage drop of motor branch circuits exceeds 1-1/2 percent from the distribution panel to the motor; in which case, voltage drop shall govern wire sizes. A power factor of 80 percent shall be used for motors in such calculations.

1.9 EXTRA MATERIALS

A. Furnish extra materials that match products installed and that are packaged with protective covering for storage and identified with labels describing contents.

1. Fuses for Fusible Switches: Equal to 10 percent of quantity installed for each size and type, but no fewer than three of each size and type.

2. Control Power Fuses: Equal to 10 percent of quantity installed for each size and type, but no fewer than two of each size and type.

3. Overload Relays: Equal to 10 percent of quantity installed for each size and type, but no fewer than three of each size and type.

4. Pilot Lights: Equal to 10 percent of quantity installed for each type, but no fewer than two of each type.

PART 2 PRODUCTS

2.1 MANUFACTURERS

A. Available Manufacturers: Subject to compliance with requirements, supply equipment from one of the following manufacturers. No other manufacturers are acceptable.

1. Square D Company; Groupe Schneider. (Basis of Design).

2. Eaton Corporation; Westinghouse & Cutler-Hammer Products.

3. Siemens Energy and Automation, Inc.

4. Allen-Bradley Company; Industrial Control Group.

5. Crouse-Hinds ECM; Cooper Industries, Inc. Division.

B. All motor controllers shall be NEMA type controllers. IEC type controllers shall NOT be acceptable.

2.2 MANUAL MOTOR CONTROLLERS

A. Description: NEMA ICS 2, AC general-purpose Class A manually-operated, full-voltage controller for fractional horsepower induction motors, with thermal overload unit. Manual motor controllers shall be equipped with red pilot light, hand-off-automatic selector switch and toggle operator. Provide size and number of poles as required for a complete installation of the equipment being connected.

B. Thermal Overload Units:

1. Thermal overload units shall be melting alloy type, properly sized for the equipment being protected, and shall be interchangeable. Controller shall be inoperable if thermal overload unit is removed.

C. Enclosure: ANSI/NEMA ICS 6; Type 1 for interior use and Type 4 water-tight and dust tight die-cast zinc for damp/wet locations. Provide flush-mounted enclosures for units located in finished areas. Provide handle guard with locking provisions in the "off" position on all enclosures.

D. Furnish Square D, Class 2510 Type F motor controllers with 2510 FL1 handle guard, or approved equal.

2.3 MANUAL MOTOR SWITCHES

A. Description: NEMA ICS 2, AC general-purpose Class A manually-operated, full-voltage controller for integral horsepower induction motors, without thermal overload unit. Manual motor switches shall be equipped with red pilot light and toggle operator. Provide size and number of poles as required for a complete installation of the equipment being connected.

B. Enclosure: ANSI/NEMA ICS 6; Type 1 for interior use and Type 4 water-tight and dust tight die-cast zinc for damp/wet locations. Provide flush-mounted enclosures for units located in finished areas. Provide handle guard with locking provisions in the "off" position on all enclosures.

C. Furnish Square D, Class 2510 Type K motor controllers with 2510 FL1 handle guard, or approved equal.

2.4 COMBINATION MAGNETIC MOTOR CONTROLLERS - DISCONNECT SWITCH TYPE

A. Description: Combine magnetic motor controllers with fusible switch disconnect in common enclosure.

1. Magnetic Motor Controllers: NEMA ICS 2, AC general-purpose Class A full-voltage, non-reversing, across-the-line magnetic controller for induction motors rated in horsepower.

2. Fusible Switch Assemblies: NEMA KS 1, enclosed knife switch with externally operable handle and visible blades. Switch shall have a color-coded externally operated handle. Operating handle shall give positive visual indication of "on/off" with red and black color-coding. Switch shall have fuse clips to accept rejection-type, dual-element, current-limiting, time-delay fuses, as specified in Division 26 Section "Fuses".

B. Control Circuit: Coordinate with Automatic Temperature Control Contractor; obtained from integral control power transformer.

C. Coil: Encapsulated type.

D. Poles: As indicated.

E. Size: NEMA size 1, unless otherwise indicated.

F. Contacts: Totally enclosed, double-break, silver-cadmium-oxide power contacts. Contact inspection and replacement shall be possible without disturbing line or load wiring.

G. Wiring: Straight-through wiring with all terminals clearly marked.

H. Overload Relay: NEMA ICS. Provide with sensors in each phase matched to nameplate full-load current of specific motor to which they connect, and with appropriate adjustment for motor duty cycle.

1. Solid State: Trip current rating will be established by selection of overload relay and shall be adjustable (3 to 1 current range). The overload shall be self-powered, provide phase loss and phase unbalance protection, have a permanent tamper guard, and be ambient insensitive. It shall be available in Trip Class 10 or Class 20 and have a mechanical test function.

2. Outputs: Provide normally closed (N.C.) auxiliary contact.

3. Reset: Unit shall offer both manual reset and remote reset using an external module.

I. Options and Features:

1. Control Power Transformers: Include a control power transformer with adequate capacity to operate connected pilot light, indicating and control devices, plus 100 percent spare capacity. Provide fused secondary protection and bond un-fused leg of secondary to enclosure.

2. Auxiliary Contacts: Provide two normally open (N.O.) and two normally closed (N.C.) auxiliary contacts in each starter in addition to the standard normally open (N.O.) sealing contact.

3. Push-Buttons: Momentary push buttons with a factory-applied hasp arranged so a padlock can be used to lock the push-button in depressed position with control circuit open.

4. Cover Mounted Indicating Lights: Green "Power Available" and red "Running" LED type indicating lights. "Power Available" indicating light shall be connected at the load side of the fused secondary terminals of the control power transformer. "Running" indicating light shall be connected through one normally open (N.O.) auxiliary control contact. Indicating lights connected to the start button or across the load side of starters will not be acceptable. Indicating lights shall be equipped with individual legend plates supplied by the manufacturer.

5. Pilot Device Contacts: NEMA ICS 2, Form "Z".

6. Selector Switches: Rotary type, Hand-Off-Automatic (H-O-A) selector switch. All switch positions shall be maintained contact.

2.5 ENCLOSURES

A. Description: All motor controllers shall be mounted in enclosures, flush or surface mounted as required. Provide flush-mounted enclosures for motor controls in finished locations.

B. Enclosures shall comply with requirements of NEMA 250 – “Enclosures for Electrical Equipment”, and NEMA ICS 6 – “Enclosures Standard”.

C. Enclosures shall be provided in accordance with the following requirements in order to meet environmental conditions at the installed location of each motor controller.

1. Dry, Interior Locations: NEMA Type 1.

PART 3 EXECUTION

3.1 APPLICATIONS

A. Select features of each motor controller to coordinate with ratings and characteristics of supply circuit and motor; required control sequence; duty cycle of motor, drive, and load; and configuration of pilot device and control circuit affecting controller functions.

B. Select horsepower rating of controllers to suit motor controlled.

C. Use fractional-horsepower manual motor controllers for single-phase motors, unless otherwise indicated.

D. Hand-Off-Automatic Selector Switches: In covers of manual and magnetic motor controllers started and stopped by automatic controls or interlocked with other equipment.

E. Provide heaters and fuses correlated with full load nameplate current of motors provided. Set overload devices to suit motor provided.

3.2 INSTALLATION

A. Install motor controllers in locations as indicated, according to manufacturer's written instructions.

B. Install motor controllers level and plumb. Provide mounting brackets, wall bracing, and accessories as required.

C. Install motor controllers to have adequate working space in accordance with Article 110.26 of the National Electrical Code. Motor controllers shall not be installed beneath ductwork, piping, etc.

D. Install independently mounted motor-control devices according to manufacturer's written instructions.

E. Location: Locate controllers within sight of motors controlled, unless otherwise indicated.

F. For control equipment at walls, bolt units to wall or mount on lightweight structural-steel channels bolted to wall. For controllers not at walls, provide freestanding racks conforming to Division 26 Section “Hangers and Supports”.

3.3 IDENTIFICATION

A. Identify motor-control components and control wiring according to requirements specified in Division 26 Section “Electrical Identification”.

B. All motor controllers shall be provided with engraved nameplates which clearly identify the equipment served, circuit designation, and circuit voltage/phase.

3.4 CONTROL WIRING INSTALLATION

A. Install wiring between motor-control devices according to Division 26 Section “Conductors and Cables”.

B. Bundle, train, and support wiring in enclosures.

C. Connect hand-off-automatic switch and other automatic control devices where available.

3.5 CONNECTIONS

A. Connect motor controllers and components to wiring system and to ground as indicated and instructed by manufacturer.

B. Tighten connectors, terminals, bus joints, and mountings. Tighten field-connected connectors and terminals, including screws and bolts, according to manufacturer's published torque-tightening values. Where manufacturer's torque values are not indicated, use those specified in UL 486A and UL 486B.

3.6 FIELD QUALITY CONTROL

A. Visual and Mechanical Inspection: Include the following inspections and related work.

1. Inspect for defects and physical damage, NRTL labeling, and nameplate compliance with drawings and schedules.

2. Exercise and perform operational tests of mechanical components and other operable devices in accordance with manufacturer’s instructions.

3. Check tightness of electrical connections of devices with calibrated torque wrench. Use Manufacturer’s recommended torque values.

4. Clean devices using Manufacturer’s approved methods and materials.

5. Verify proper fuse types and ratings in fusible devices.

6. Verify that fuses are facing out and that fuse ratings are readable without removing fuses.

7. Verify proper thermal overload types and ratings in devices with thermal overload protection.

8. Verify proper operation of pilot lights.

9. Verify proper operation of hand-off-automatic selector switches.

10. Motor-Control Device Ratings and Settings: Verify that ratings and settings as installed are appropriate for final loads and final system arrangement and parameters. Recommend final protective-device ratings and settings where differences are found. Use accepted revised ratings or settings to make the final system adjustments. Prepare and submit the load current and overload relay heater list.

B. Electrical Tests: Upon installation of motor controllers and before electrical circuitry has been energized, provide the following minimum inspections and tests according to manufacturer's written instructions to ensure components are operational within industry and manufacturer's tolerances, are installed according to the Contract Documents, and are suitable for energizing.

1. Inspect accessible components for cleanliness, mechanical and electrical integrity, and damage or deterioration.

2. Inspect bolted electrical connections for tightness according to manufacturer's published torque values or, if not available, those specified in UL 486A and UL 486B.

3. Pretesting:

   a. Make insulation resistance test of conducting parts of motor control components, and of connecting supply, feeder, and control circuits. For devices containing solid-state components, use test equipment and methods recommended by the manufacturer.
   b. Make continuity tests of circuits.

4. Electrical Tests:
   a. Insulation resistance test of motor control devices conducting parts to the extent permitted by the manufacturer’s instructions. Insulation resistance less than 100 megohms is not acceptable.
   b. Use primary current injection to check performance characteristics of motor-circuit protectors and for overload relays of controllers for motors 15 horsepower and larger. Trip characteristics not within manufacturer’s published time-current tolerances are not acceptable.
   c. Make adjustments for final settings of adjustable-trip devices.
   d. Test auxiliary protective features such as loss of phase, phase unbalance and under-voltage to verify operation.
   e. Check for improper voltages at terminals in controllers that have external control wiring when controller disconnect is opened. Any voltage over 30V is unacceptable.

5. Test Labeling: On satisfactory completion of tests and related effort, apply a label to tested components indicating test results, date, and responsible organization and person.

3.7 CLEANING

A. Remove paint splatters and other spots, dirt, and debris. Touch up scratches and mars of finish to match original finish. Clean devices internally, using methods and materials recommended by manufacturer.

END OF SECTION

DIVISION 26
SECTION 264113
LIGHTNING PROTECTION SYSTEM
TABLE OF CONTENTS

PART 1 GENERAL

1.1 RELATED DOCUMENTS
1.2 SUMMARY
1.3 SYSTEM DESCRIPTION
1.4 SUBMITTALS
1.5 QUALITY ASSURANCE
1.6 WORKMANSHIP
1.7 SEQUENCING AND SCHEDULING

PART 2 PRODUCTS

2.1 MANUFACTURERS
2.2 LIGHTNING PROTECTION SYSTEM COMPONENTS

PART 3 EXECUTION

3.1 EXAMINATION
3.2 INSTALLATION
3.3 AIR TERMINAL INSTALLATION
3.4 ROOF CONDUCTORS
3.5 GROUND CONNECTIONS
3.6 INTERCONNECTION OF METAL PARTS
3.7 CORROSION PROTECTION
3.8 FIELD QUALITY CONTROL
3.9 CONNECTIONS TO EXISTING SYSTEM

SECTION 264113 - LIGHTNING PROTECTION SYSTEM

PART 1 GENERAL

1.1 RELATED DOCUMENTS

A. Drawings and general provisions of the Contract, including General and Supplementary Conditions and Division 01 Specification Sections apply to this Section.

B. Refer to Division 26, Section "Common Work Results for Electrical", for basic electrical installation requirements.

1.2 SUMMARY

A. This section includes lightning protection systems for buildings and associated structures and includes requirements for lightning protection system components complying with UL96, UL96A, and NFPA 780.

B. Contractor shall provide additional components and labor in order to meet all requirements of a UL Master Labeled Lightning Protection System.

1.3 SYSTEM DESCRIPTION

A. Remove existing lightning protection system from existing roof mounted HVAC equipment to be removed. Extend and provide new lightning protection system to top of new roof mounted HVAC equipment. Contractor shall perform ground resistance test prior to any demolition work and document resistance values. At completion of project Contractor shall ensure that lightning protection system is intact and resistance values are the same or better that prior to demolition.

1.4 SUBMITTALS

A. General: Submit the following according to Conditions of Contract and Division 01 Specification Sections.

B. Product data for each component: Include data for roof adhesive when used. Submit accurate pictorial views of decorative air terminal components. Provide dimensions and materials of each components and include indication of listing in accordance with UL 96.

C. Provide scaled shop drawings detailing lightning protection system including, but not limited to, air terminal locations, grounding electrodes, conductor sizes and routing, bonding connections to structures, and connections and grounding. Include connection and termination details. The shop drawings shall be Master Labeled stamped. Submit a roof plan and a ground floor plan with all equipment properly dimensioned.

D. Qualification data for firms and persons specified in *Quality Assurance* Article to demonstrate their capabilities and experience. Include list of completed projects with project names, addresses, names of Architects and Owners, and other information specified.

E. Field inspection reports indicating compliance with specified requirements.

F. Project Record Documents - Accurately record the following: Actual locations of air terminals, grounding electrodes, bonding connections, and routing of system conductors in project record documents.

G. Submit a UL compliance certificate indicating compliance with all requirements.

1.5 QUALITY ASSURANCE

A. Installer Qualifications: Engage an experienced and LPI-Certified Master Installer to install the Lightning Protection System. The installation shall be under the direct supervision of an LPI-Certified Master Installer.

B. Designer Qualifications: Engage an LPI-Certified Designer to design and lay out the Lightning Protection System.

C. Inspector Qualifications: Engage an LPI-Certified Inspector to perform periodic inspections during installation of the Lightning Protection System.

D. Manufacturers Qualifications: Provide products by firms listed and approved by Underwriters Laboratories, Inc., having had not less than five (5) years experience in this specialty work under UL procedures.

E. Listing and Labeling: Provide products specified in this Section that are listed and labeled by an organization concerned with product evaluations, and that can determine compliance with appropriate standards for he current production of listed items.

1. Listing and Labeling Agency Qualifications; A *Nationally Recognized Testing Laboratory* (NRTL) as defined in OSHA Regulation 1910.7.

F. Conform to NFPA 780, *Lightning Protection Code*.

G. Conform to UL 96, *Standard for Lightning Protection Components*.

H. Conform to UL 96A, *Installation Requirements for Lightning Protection Systems* and provide UL Master Label.

I. Conform to LPI-175, *Lightning Protection Installation Standard* and provide LPI-certified system.

J. Conform to NFPA 70, *National Electrical Code*.

K. Conform to the most stringent requirements when more than one standard is specified for products or installation.

1.6 WORKMANSHIP

A. Guarantee all materials and workmanship furnished and installed under this section of the specifications two years from the date of final acceptance of work. The Contractor also

agrees that he will, at his own expense, repair and/or replace all such defective materials or effective workmanship which become defective during the term of this guarantee.

1.7 SEQUENCING AND SCHEDULING

A. Coordinate installation of lightning protection system with the installation of other building systems and components, including electrical wiring, supporting structures and building materials, metal bodies requiring bonding to lightning protection system, and building finishes.

PART 2 PRODUCTS

2.1 MANUFACTURERS

A. Available Manufacturers: Subject to compliance with requirements, manufacturer's offering lightning protection components that my be incorporated in the Work include, but are not limited to, the following:

1. A-C Lightning Security, Inc.

2. Bonded Lightning Protection, Inc.

3. East Coast Lightning Equipment, Inc.

4. Harger Lightning and Grounding; Harger, Inc.

5. Heary Brothers Lightning Protection.

6. Independent Protection Company, Inc.

7. Robbins Lightning Protection, Inc.

8. Thompson Lightning Protection.

9. Warren Lightning Rod Company.

2.2 LIGHTNING PROTECTION SYSTEM COMPONENTS

A. Lightning Protection System Products: Manufactured to NFPA 780, LPI-176, *Lightning Protection System Material and Components Standard*, and UL 96, *Lightning Protection Components.*

B. Air Terminals for Roof Mounting: Units with bases especially designed for the specified roof materials. Solid aluminum, with length and type to match existing.

1. Aluminum Cable Conductors (Class I):

a. Twenty-eight strand aluminum cable.

b. Minimum 115 lbs/1,000 Linear Feet (LF).

c. Minimum 14 AWG conductors.

d. Aluminum conductors for bonding or interconnecting metallic bodies to the main cable shall be 4 AWG aluminum wire in strength and cross section.

e. In all areas where the cable comes in direct contact with aluminum material, aluminum cable must be used to prevent electrolytic corrosion of the dissimilar metals.

f. Prohibited in contact with earth.

g. Prohibited where contributing to rapid corrosion.

h. Perforated strips shall not be used.

2. If the building has structural steel columns, the structural steel columns may be used as the down-conductors. Refer to Part 3 of this Section for installation requirements.

C. Connectors and Splices - Exothermic, conforming to UL 96.

D. Roof Penetrations: Through-roof assemblies with solid bars and appropriate roof flashings.

E. Miscellaneous Components: Provide other components required for a complete lightning protection system such as bonding plates, terminal supports, clips, anchors, fasteners, bolts, nuts, screws, etc. All components shall conform to UL 96 for applicable classes.

1. Bonding plates shall not be less than 8 square inches of surface contact secured in place with stainless steel bolts.

F. Conduit: Provide 1-inch Type 40 PVC conduit for all down conductors. Refer to Division 26 Section, “Raceways and Boxes” for product requirements.

G. Waterproof Penetrations: The Contractor shall provide all waterproofing for the through-roof conduits, connectors, and other penetrations.

PART 3 EXECUTION

3.1 EXAMINATION

A. Verification of Conditions: Verify that field measurements, surfaces, substrates and conditions are as required, and ready to receive work.

B. Examine surfaces and conditions, with Installer present, for compliance with installation tolerances and other conditions affecting performance of the lightning protection system. Do not proceed with installation until unsatisfactory conditions have been corrected.

C. By beginning work, conditions are accepted with the responsibility for correcting unsuitable conditions encountered at no additional cost to the Owner.

D. Lightning Protection System shall be provided with UL Master Label Certificate. Turn UL Master Label Certificate over to Owner upon system approval, and include one (1) copy of the same in the Operation and Maintenance Manual(s).

3.2 INSTALLATION

A. Install/modify lightning protection systems as required, according to manufacturer's written instructions.

B. Install components according to LPI-175, UL 96A, and NFPA 78.

C. Install conductors with direct paths from air terminals to ground connections. Avoid sharp bends and narrow loops. Run conductors in nonmetallic raceway, Schedule 40, minimum.

D. Support conductors every three (3) feet.

E. Notify Engineer at least 48 hours before concealing lightning protection system components.

F. Cable Connections: Use approved exothermic-welded connections for all conductor splices and connections between conductors and other components, except those above single-ply membrane roofing.

G. Air Terminals on Specified roofing: Use adhesive recommended by manufacturer of air terminals and approved by manufacturer of roofing material. Comply with adhesive manufacturer's installation instructions. Maximum spacing of 25 feet.

H. Bond extremities of vertical metal bodies exceeding 60 feet (18 m) in length to the Lightning Protection System.

I. Bond ground terminals with counterpoise conductor located below grade.

J. Bond grounded media on building within 12 feet (4 m) of ground with counterpoise conductor located as indicated.

K. Bond grounded media on building within 1 foot (4m) of roof with counterpoise conductor.

L. Bond grounded media on building within 12 feet (4m) of roof with interconnecting loop at eave level or above.

M. Bond lightning protection system to grounded media on building at every 60 feet (18 m) with intermediate-level interconnection loop conductors.

N. Install the conductors as inconspicuously as practical and with the proper bends. Install conductors avoiding radius bends of less than 8 inches.

O. Install the vertical conductors within the concealed cavity of exterior walls. Route the conductors to the exterior at elevations below the finished grade and make the ground connections to the earth outside of the building or stack perimeter.

P. Where shown, use the structural steel framework or reinforcing steel as the main conductor: Weld or bond the non-electrically-continuous sections together and make them electrically-continuous.

Q. Protect copper conductors with stiff copper or brass tubing, which enclose the conductors from the top to the bottom of the tubing, between 300 mm (one foot) below and 2100 mm (seven feet) above the finished grade.

R. Sheath copper conductors, which pass over cast stone. Cut stone, architectural concrete, and masonry surfaces with not less than a 2 mm (1/16-inch) thickness of lead to prevent staining of the exterior finish surfaces.

3.3 AIR TERMINAL INSTALLATION

A. Install per UL and NFPA requirements:

1. Rigidly connect to structure.

2. Make electrically continuous with roof conductors by means of pressure connectors or crimped joints.

3. At ends of structures, set 24-inches from end of ridge or edges and corner of roof.

4. Maximum spacing of 20 feet.

5. Prevent overturning by means of tripod or braces.

6. Uniformly space air terminals about the rim of the stack, not more than 24 inches from the corners or more than 8'-0-inches apart.

7. Air terminals on standing seam metal roof systems shall be secured with stainless steel or aluminum clamps designed for standing seam metal roofing systems.

3.4 ROOF CONDUCTORS

A. Install per UL and NFPA requirements:

1. Connect directly to roof or ridge at 48-inch intervals.

2. Prevent sharp bends or turns.

3. Minimum bend radius of 8 inches.

4. Provide a downward or horizontal course.

5. All connections shall be electrically continuous.

6. Follow contours of flat roofs, ridges, parapets and edges.

3.5 GROUND CONNECTIONS

A. Use exothermic welding type connections which form solid metal joints in the main vertical and horizontal conductors, and for connections that are not exposed in the finish work.

B. Provide ground connection for each down conductor.

C. Metal water pipes and other large underground metallic objects shall be bonded together with all grounding mediums.

D. Ground connections shall be protected from mechanical injury.

E. In making ground connections, utilize permanently moist areas as applicable.

F. For the conductors located outside of the building, install the conductors not less than 2 feet (600 mm) below the finished grade.

G. Make connections of dissimilar metal with bi-metallic type fittings to prevent electrolytic action.

H. For structural steel buildings, connect the steel framework of the buildings to the main water pipe near the water system entrance to the building.

I. Connect exterior metal surfaces, located within 900 mm (three feet) of the lightning protection system conductors, to the lightning protection system conductors to prevent flashovers.

J. Do not pierce the structural steel in any manner. Connections to the structural steel shall conform to the UL Publication No. 96A.

K. Install ground connections to earth at not more than 1800 mm (60 foot) intervals around the perimeter of the building.

L. Weld or braze bonding plates, not less than 200 mm (eight inches) square, to cleaned sections of the steel and connect the conductors to the plates.

M. Connections to Lightning Protection System: Bond grounding conductors, including grounding-conductor conduits, to lightning protection down conductors or lightning protection grounding conductors in compliance with NFPA 750.

N. Common Ground Bonding with Lightning Protection System: Bond electric power system ground directly to lightning protection system grounding conductor at closest point to electric service grounding electrode. Use bonding conductor sized same as system grounding conductor and install in conduit.

3.6 INTERCONNECTION OF METAL PARTS

A. Metal ventilators shall be rigidly connected to the roof conductor at three places on the ventilator.

B. Metal bodies of conductance shall be protected if not within the zone of protection of the air terminals. All metal bodies having equal to, or greater than, 400 square inches shall be bonded to the lightning protection system using main size conductors and a bonding plate with not less than 3 square inches. Provisions shall be made to guard against corrosion due to joining of dissimilar metals. Provide air terminals on metals that are less than 3/16th-inch thick, which are not in the *cone of protection* on roof areas, such as ventilators, air conditioning units, etc., all as required by the stated Code.

C. All major rooftop mechanical equipment and isolated metal bodies within 6 feet of system conductors shall be bonded to lightning protections system's main roof conductor with secondary conductors and appropriate bonding devices. Do not penetrate airside housings for anchoring. Seal air and water tight all connections at mechanical equipment.

D. Interconnect conductive and inductive metals as required by the UL 96A Code.

3.7 CORROSION PROTECTION

A. Use no combination of materials to form an electrolytic couple that will accelerate corrosion in the presence of moisture, unless moisture is permanently excluded from the junction of such materials.

B. Use conductors with suitable protective coatings where conditions would cause deterioration or corrosion of conductors.

3.8 FIELD QUALITY CONTROL

A. Periodic Inspection: Provide the services of a qualified inspector to perform periodic inspection according to LPI-177, *Inspection Guide for LPI Certified Systems*.

B. UL Inspection: Provide the services of Underwriters Laboratories, Inc. to perform inspections. Make revisions as required to obtain Master Label Certificate.

C. Certification: Two weeks prior to final inspection, deliver to the Owner four copies of the Certification that the installed lightning protection system has been inspected by a UL representative and has been approved by UL without variation.

D. Prior to commencement of any work, the Contractor shall obtain and deliver to the Owner the application and inspection forms necessary to file application for the LPI Certified System Certificates. As applicable, these forms include: Stage 1 - Grounding Inspection Report; Stage 2 - Concealed Components Inspection Report; and Stage 3 - Final Inspection Report.

E. The Contractor shall perform required inspections at the appropriate times and upon completion of the job shall forward the above Inspection Report forms to the Lightning Protection Institute to obtain the LPI Certified System Certificate.

F. Verify the electrical continuity by measuring the ground resistance to earth at the ground level, at the top of the building or stack, and at intermediate points with a sensitive ohmmeter. Compare the resistance readings. Ground resistance shall not exceed 5 ohms. Submit test results.

3.9 CONNECTIONS TO EXISTING SYSTEM

A. Where the drawings show the new lightning protection system connected to an existing lightning protection system without a UL master label, the new portion of the lightning system still requires inspection and labels as specified above for new work.

END OF SECTION

DIVISION 28
SECTION 280500
COMMON WORK RESULTS FOR ELECTRONIC SAFETY AND SECURITY
TABLE OF CONTENTS

PART 1 GENERAL

1.1 RELATED DOCUMENTS
1.2 SUMMARY
1.3 CONTRACTOR QUALIFICATION
1.4 PERMITS AND FEES
1.5 EXAMINATION OF SITE
1.6 INTERPRETATION OF DOCUMENTS
1.7 MATERIALS AND EQUIPMENT
1.8 ELECTRONIC SAFETY AND SECURITY WORK UNDER OTHER DIVISIONS
1.9 FIRE SAFE MATERIALS
1.10 REFERENCED STANDARDS, CODES, AND SPECIFICATIONS
1.11 SUBMITTALS
1.12 SUBMITTAL PROCEDURES
1.13 SHOP DRAWINGS
1.14 DEFINITIONS
1.15 RECORD DRAWINGS
1.16 WARRANTY
1.17 OPERATION AND MAINTENANCE MANUALS
1.18 INSTALLATION AND COORDINATION DRAWINGS

PART 2 PRODUCTS

2.1 SLEEVES FOR RACEWAYS AND CABLES
2.2 GROUT

PART 3 EXECUTION

3.1 TEMPORARY FACILITIES
3.2 COMMON REQUIREMENTS FOR ELECTRONIC SAFETY AND SECURITY INSTALLATION
3.3 SLEEVE INSTALLATION FOR ELECTRONIC SAFETY AND SECURITY PENETRATIONS
3.4 FIRESTOPPING
3.5 SUPPORTS, HANGERS, AND FOUNDATIONS
3.6 PROVISIONS FOR ACCESS
3.7 PAINTING AND FINISHES
3.8 COLOR SELECTION
3.9 PROTECTION OF WORK
3.10 OPERATION OF EQUIPMENT
3.11 TESTING AND ADJUSTMENT
3.12 WALL AND FLOOR PENETRATIONS
3.13 EQUIPMENT BY OTHERS
3.14 CUTTING AND PATCHING
3.15 PENETRATION OF WATERPROOF CONSTRUCTION
3.16 CONNECTIONS AND ALTERATIONS TO EXISTING WORK
3.17 COORDINATION

SECTION 280500 - COMMON WORK RESULTS FOR ELECTRONIC SAFETY AND SECURITY

PART 1 GENERAL

1.1 RELATED DOCUMENTS

A. Drawings and general provisions of the Contract, including General and Supplementary Conditions and Division 01 Specification Sections, apply to this Section.

1.2 SUMMARY

A. Section Includes:

1. Electrical equipment coordination and installation.

2. Sleeves for raceways and cables.

3. Foam Duct Sealant.

4. Grout.

5. Common electronic safety and security installation requirements.

B. Provide all labor, materials, equipment, and services necessary for and incidental to the complete installation and operation of all electrical work.

C. Unless otherwise specified, all submissions shall be made to, and acceptances and approvals made by the Architect and the Engineer.

D. Contract Drawings are generally diagrammatic and all offsets, fittings, transitions and accessories are not necessarily shown. Furnish and install all such items as may be required to fit the work to the conditions encountered. Arrange conduits, equipment, and other work generally as shown on the Contract Drawings, providing proper clearance and access. Where departures are proposed because of field conditions or other causes, prepare and submit detailed shop drawings for approval in accordance with Article “Submittals” specified below. The right is reserved to make reasonable changes in location of equipment, boxes, conduit/wiring, and devices, up to the time of rough-in or fabrication.

E. Conform to the requirements of all rules, regulations and codes of local, state and federal authorities having jurisdiction.

F. Coordinate the work under Division 28 with the work of all other construction trades.

G. Be responsible for all construction means, methods, techniques, procedures, and phasing sequences used in the work. Furnish all tools, equipment and materials necessary to properly perform the work in first class, substantial, and workmanlike manner, in accordance with the full intent and meaning of the Contract Documents.

H. Arrange conduit, wiring, equipment, and other work generally as shown, providing proper clearances and access. Carefully examine all Contract Drawings and fit the work in each location without substantial alteration. Where departures are proposed because of field

conditions or other causes, prepare and submit detailed shop drawings for approval in accordance with Article "Submittals" as hereinafter specified. The right is reserved to make reasonable changes in location of equipment, conduit and wiring up to the time of rough-in or fabrication.

1.3 CONTRACTOR QUALIFICATION

A. Any Contractor or Subcontractor performing work under Division 28 shall be fully qualified and acceptable to the Architect/Engineer and Owner. Submit the following evidence when requested:

1. A list of not less than five comparable projects which the Contractor completed.

2. Letter of reference from not less than three registered professional engineers, general contractors or building owners.

3. Local and/or State License, where required.

4. Membership in trade or professional organizations where required.

B. A Contractor is any individual, partnership, or corporation, performing work by contract or subcontract on this project.

C. Acceptance of a Contractor or Subcontractor will not relieve the Contractor or subcontractor of any contractual requirements or his responsibility to supervise and coordinate the work, of various trades.

1.4 PERMITS AND FEES

A. Obtain all permits and pay taxes, fees and other costs in connection with the work. File necessary plans, prepare documents, give proper notices and obtain necessary approvals. Deliver inspection and approval certificates to Owner prior to final acceptance of the work.

B. Permits and fees shall comply with Division 01 Section, *General Requirements*.

C. Notify Inspection Authorities to schedule inspections of work.

D. Notify Engineer in advance of scheduled inspections.

E. A foreman, superintendent or other supervisor shall be in attendance for all scheduled inspections

1.5 EXAMINATION OF SITE

A. Examine the site, determine all conditions and circumstances under which the work must be done, and make all necessary allowances for same. No additional cost to the Owner will be permitted for Contractor's failure to do so.

B. Examine and verify specific conditions described in individual Specifications sections.

C. Verify that utility services are available, of the correct characteristics, and in the correct locations.

1.6 INTERPRETATION OF DOCUMENTS

A. Any discrepancies between Drawings, Specifications, Drawings and Specifications, or within Drawings and Specifications shall be promptly brought to the attention of the Owner during the bidding period. No allowance shall subsequently be made by reason of failure to have brought said discrepancies to the attention of the Owner during the bidding period or of any error on the Bidder's part.

B. The locations of products shown on Drawings are approximate. Place the devices to eliminate all interference with above-ceiling ducts, piping, etc. Where any doubt exists, the exact location shall be determined by the Owner.

C. All general trades and existing conditions shall be checked before installing any devices, cabling, etc.

D. Equipment sizes shown on the Drawings are estimated. Before installing any cabling, conduit, or boxes obtain the exact equipment requirements and install cabling, conduit, boxes or other item of the correct size for the equipment actually installed.

E. Where variances occur between the Drawings and Specifications or within either document itself, the item or arrangement of better quality, greater quality, or higher cost shall be included in the Contract Price. The Engineer will decide on the item and manner in which the work shall be installed.

F. Contract Drawings are generally diagrammatic and all offsets, fittings, transitions, and accessories are not necessarily shown. Furnish and install all such items as may be required to fit the work to the conditions encountered. Arrange conduits, equipment, and other work generally as shown on the Contract Drawings, providing proper clearance and access. Where departures are proposed because of field conditions or other causes, prepare and submit detailed Shop Drawings for approval in accordance with Article "Submittals" as herein after specified. The right is reserved to make reasonable changes in location of equipment, conduit/wiring, and devices, up to the time of rough-in or fabrication.

G. Work not specifically outlined, but reasonably incidental to the completion of the work, shall be included without additional compensation from the Engineer and Owner.

H. Perform the work in a first-class, substantial and workmanlike manner. Any materials installed which do not present an orderly and neat workmanlike appearance shall be removed and replaced when so directed by the Engineer, at the Contractor's expense.

I. The complete set of Mechanical and Electrical Drawings and Specifications apply to this work. The successful Bidder shall familiarize himself with all other related documents.

1.7 MATERIALS AND EQUIPMENT

A. Materials and equipment installed as a permanent part of the project shall be new, unless otherwise indicated or specified, and of the specified type and quality.

B. Where material or equipment is identified by proprietary name, model number and/or manufacturer, furnish named item, or its equal, subject to approval by Engineer. Substituted items shall be equal or better in quality and performance and must be suitable for available space, required arrangement, and application. Submit all data necessary to determine suitability of substituted items, for approval.

C. The suitability of named item only has been verified. Where more than one item is named, only the first named item has been verified as suitable. Substituted items, including items other than first named shall be equal or better in quality and performance to that of specified items, and must be suitable for available space, required arrangement and application. Contractor, by providing other than the first named manufacturer, assumes responsibility for all necessary adjustments and modifications necessary for a satisfactory installation. Adjustments and modifications shall include but not be limited to electrical, structural, support, and architectural work.

D. Substitution will not be permitted for specified items of material or equipment where noted.

E. All items of equipment furnished shall have a service record of at least five (5) years.

1.8 ELECTRONIC SAFETY AND SECURITY WORK UNDER OTHER DIVISIONS

A. Architectural Equipment and Systems

1. In general, any electrically operated or controlled equipment furnished under Architectural divisions shall be supplied with control wiring, transformers, contacts, etc.

2. Division 28 shall provide fire alarm connections to such equipment in accordance with applicable codes and standards.

3. Architectural Equipment refers to, but is not limited to the following:

a. Cabinets, Casework and Countertops

1) Do not install fire alarm devices, etc. behind casework, cabinets, etc. Coordinate with approved casework shop drawings.

b. Classroom and Lab Equipment

1) Provide carbon monoxide detection in all classrooms and labs with gas outlets, gas-fired kilns, etc.

c. Door Hardware

1) Includes, but is not limited to electric strikes, magnetic hold-open devices, overhead doors, smoke/fire doors, etc.
2) Verify voltages of door hardware with approved door hardware shop drawings.
3) Coordinate mounting height and location of magnetic hold-open devices with Architect.
4) Coordinate fire alarm connections for overhead coiling doors/grilles with approved shop drawings.

5) Coordinate locations of smoke detectors serving fire/smoke doors with architectural drawings.

B. HVAC Equipment and Systems

1. In general, any electrically operated or controlled equipment furnished under HVAC divisions shall be supplied with control wiring, transformers, contacts, etc.

2. Division 28 shall provide fire alarm connections to such equipment in accordance with applicable codes and standards.

3. Certain mechanical units are furnished from the factory with motor starters, contactors, transformers, fuses, wiring, etc., required for fans, pumps, etc. When this equipment is supplied from the factory, Division 26 shall coordinate with Division 23 such that only one set of starters, fuses, switches, etc. is provided.

4. In general, control and interlock equipment (including, but not limited to wiring, conduit, transformers, relays, contacts, etc.) for HVAC equipment and systems is furnished under Division 23. Division 26 shall install and connect all equipment as necessary.

5. HVAC equipment refers to, but is not limited to the following:

a. Gas-Fired Equipment
   1) Provide carbon monoxide detectors in all spaces with gas-fired equipment.

b. Make-up Air Units
   1) Provide duct-mounted smoke detectors and remote test stations for units over 2,000cfm.
   2) Coordinate detector install with Division 23.
   3) Coordinate duct-mounted smoke detector sampling tube lengths with duct dimensions.

1.9 FIRE SAFE MATERIALS

A. Unless otherwise indicated, materials and equipment shall conform to UL, NFPA and ASTM standards for fire safety with smoke and fire hazard rating not exceeding flame spread of 25 and smoke developed of 50.

1.10 REFERENCED STANDARDS, CODES AND SPECIFICATIONS

A. Specifications, Codes and Standards listed below are included as part of this Specification, latest edition:

1. ADA - Americans with Disabilities Act

2. ANSI - American National Standards Institute

3. ASTM - American Society for Testing and Materials

4. CSA - Canadian Standards Association

5. EPA - Environmental Protection Agency

6. FM - Factory Mutual

7. IBC - International Building Code

8. IEEE - Institute of Electrical and Electronics Engineers

9. NEC - National Electrical Code

10. NECA - National Electrical Contractors Association

11. NEMA - National Electrical Manufacturers Association

12. NFPA - National Fire Protection Association

13. OSHA - Occupational Safety and Health Act

14. UL - Underwriters' Laboratories

B. Electronic safety and security construction materials shall, where a listing is normal for the particular class of material, be listed in *Electrical Construction Materials List* of the Underwriters' Laboratories, Inc. (U.L.) and shall bear the listing label. Equipment shall, where a listing is normal for the particular class of equipment, be listed by Underwriters' Laboratories, Inc. (U.L.) and shall bear the listing label. Materials and equipment listed and labeled as "approved for the purpose" by other nationally recognized testing laboratory, inspection agency or approved organization (such as E.T.L. or Factory Mutual) shall be acceptable.

1.11 SUBMITTALS

A. Product Data: Include complete descriptive product data for items specified in Part 2 of this Section.

1.12 SUBMITTAL PROCEDURES

A. Equipment, materials, installation, workmanship and arrangement of work are subject to review and acceptance. No substitution will be permitted after acceptance of equipment or materials except where such substitution is considered by the Engineer, to be in the best interest of the Owner.

B. After acceptance of Material and Equipment List, submit six (6) copies, or more as required under the General Conditions, of complete descriptive data for all items as outlined below.

C. Electronic submittals shall be prepared as a Portable Document Format (PDF) file and shall include as page 1 the Contractor’s stamp, followed by the submittal contents. Submittal form shall identify the Project, Contractor, Subcontractor or Supplier, and pertinent Contract Document references.

D. Electronic Submittal File Naming: Contractor prepared shop drawings shall be named with reference to project number, specification section, submittal number, brief content description and abbreviated submittal type.

E. Submittals shall consist of specifications, product data sheets, manufacturer's catalog cuts, dimensional shop drawings, wiring diagrams, installation instructions, samples, and any other information necessary to indicate complete compliance with Contract Documents.

F. Submittals shall include, but not be limited to, the following information: size, type, functional characteristics, compliance with standards in Division 26, required service access which shall be suitable for intended location and use, electrical service connections and requirements, and deviations from Contract Document requirements.

G. Identify submittals, indicating intended application, location and service of submitted items. Refer to Specification sections or paragraphs and Drawings where applicable.

H. Clearly indicate exact type, model number, style, size, operating characteristics, ratings, options and special features of proposed item specifically for application to this project. Submittals of a general nature will not be acceptable.

I. Submit actual operating conditions or characteristics for all equipment where required capacities are indicated. Factory order forms showing only required capacities will not be acceptable. Call attention, in writing, to deviation from contract requirements.

J. Thoroughly review and stamp all submittals to indicate compliance with contract requirements prior to submission. Coordinate installation requirements and all electrical requirements for equipment submitted. The Contractor shall be responsible for correctness of all submittals.

K. Submittals will be reviewed for general compliance with design concept in accordance with Contract Documents, but dimensions, quantities, or other details will not be verified.

L. For any submittal requiring more than two (2) reviews by the Engineer (including those caused by a change in subcontractor or supplier) the Owner will withhold Contractor's funds by a change order to the contract to cover the cost of additional reviews. One review is counted for each action including rejection or return of any reason.

M. For substituted items, clearly list on the first page of the submittal all differences between the specified item and the proposed item. The Contractor shall be responsible for corrective action and maintaining the Specification requirements if differences have not been clearly indicated in the submittal.

N. Acceptance will not constitute waiver of contract requirements unless deviations are specifically indicated and clearly noted. Use only final or corrected submittals and data prior to fabrication and/or installation.

O. Every submittal including, but not limited to the list below, shall be forwarded with its own transmittal as a separate, distinct submittal. Identify all submittals by the name of the item/system and the applicable Specification Section and/or Drawing number. Grouping of items/systems that are not related shall be unacceptable.

<u>Items and Systems</u>

1. Wire and Cable
2. Conduit and Raceways
3. Fire Alarm System Components

a. Fire Alarm Control Panel
b. Line Extenders
c. NAC Panels
d. Notification Devices (Pull Stations, Smoke Detectors, Duct Detectors, etc.)
e. Signaling Devices (Horns, Strobes, Speaker Strobes, etc.)
f. Wire and Cable

4. Firestopping Materials
5. Hangers and Supports
6. Identification Products
7. Record Drawings
8. Sleeves
9. Software
10. System Labeling Schedules
11. Testing Agency Qualifications
12. Tests and Reports
13. Transformers, Control
14. UPS Systems & Batteries
15. Wiring Diagrams

P. Submit for approval any other submittals as required by the Engineer or Owner. No item listed above shall be delivered to the site, or installed, until approved. After the proposed materials have been approved, no substitution will be permitted except where approved by the Engineer.

Q. For resubmissions, the Contractor must address in writing all of the Engineer's comments on the original submission to verify compliance.

1.13 SHOP DRAWINGS

A. Prepare and submit Shop Drawings for all electrical equipment, specially fabricated items, modifications to standard items, specially designed systems where detailed design is not shown on the Contract Drawings, or where the proposed installation differs from that shown on Contract Drawings.

B. Shop drawings shall include identification of products being installed, compliance with specified standards, notation of coordination requirements, notation of dimensions verified by field measurement, etc. Do not base shop drawings on reproductions of the Contract Documents or standard printed data.

C. Submit shop drawings concurrent with product data. Shop drawings received without associated product data will be returned without review.

D. Shop Drawing diagrams shall indicate device location, service, type, make, model number and the identification number of each device in the particular system. Following approval by all authorities, the diagrams shall be and inserted into the O&M Manual specified herein.

E. Submit for approval any other shop drawings as required by the Engineer. No item listed above shall be delivered to the site, or installed, until approved. After the proposed materials have been approved, no substitution will be permitted except where approved by the Engineer.

F. For any shop drawing requiring more than two (2) reviews by the Engineer (including those caused by a change in subcontractor or supplier) the Owner will withhold Contractor's funds by

a change order to the contract to cover the cost of additional reviews. One review is counted for each action including rejection or return for any reason.

G. Refer to individual Specification Sections and Contract Drawings for additional shop drawing requirements.

H. For resubmissions, the Contractor must address in writing all of the Engineer's comments on the original submission to verify compliance.

1.14 DEFINITIONS

A. *Approve*: To permit use of material, equipment or methods conditional upon compliance with contract documents requirements.

B. *Building Line*: Exterior wall of building.

C. *Concealed:* Hidden from sight in chases, formed spaces, shafts, hung ceilings, or embedded in construction or attic.

D. *Conduits* include conduit, all fittings, identification, and other accessories relative to such conduit.

E. *Contractor:* The Electrical Contractor and any of his subcontractors, vendors, suppliers, or fabricators.

F. *EPDM*: Ethylene-propylene-diene terpolymer rubber

G. *Exposed:* Not installed underground or *concealed* as defined above.

H. *Finished Spaces*: Spaces other than mechanical and electrical equipment rooms, furred spaces, pipe and duct shafts, unheated spaces immediately below roof, spaces above ceiling, unexcavated spaces, crawl spaces, and tunnels.

I. *Furnish and install* or *Provide*: To supply, erect, install, and connect to complete for readiness for regular operation, the particular work referred to.

J. *Location, Damp*: Locations protected from water and not subject to saturation with water or other liquids, but subject to moderate degrees of moisture. Examples of such locations include interior locations such as basements, crawlspaces, attics, cold-storage rooms, etc…

K. *Location, Dry*: A location not normally subject to dampness or wetness. A dry location may temporarily be subject to dampness or wetness during building construction.

L. *Location, Wet*: Locations subject to saturation with water or other liquids, locations exposed to weather, and installations underground or in concrete slabs or masonry in direct contact with the Earth. Examples of such locations include all exterior locations (including those under canopies, roofed open porches, etc…) commercial kitchens, and vehicle washing areas.

M. *NBR*: Acrylonitrile-butadiene rubber.

N. *Review*: Limited observation or checking to ascertain general conformance with design concept of the work and with information given in contract documents. Such action does not constitute a waiver or alteration of the contract requirements.

1.15 RECORD DRAWINGS

A. Upon completion of the electrical installations, the Contractor shall deliver to the Engineer one complete set of prints of the electrical Contract Drawings which shall be legibly marked in red pencil to show all changes and departures of the installation as compared with the original design. They shall be suitable for use in preparation of Record Drawings.

B. Contractor shall incorporate all sketches, addendums, value engineering, change orders, etc., into record drawings prior to delivering the same to the Architect.

1.16 WARRANTY

A. Contractor's attention is directed to warranty obligations contained in the General Conditions.

B. The above shall not in any way void or abrogate equipment manufacturer's guarantee or warranty. Certificates of equipment manufacturer’s warranties shall be included in the operations and maintenance manuals.

C. The Contractor guarantees for a two (2) year period from the time of final acceptance by the Owner:

1. That the work contains no faulty or imperfect material or equipment or any imperfect, careless, or unskilled workmanship.

2. That all work, equipment, machines, devices, etc. shall be adequate for the use to which they are intended, and shall operate with ordinary care and attention in a satisfactory and efficient manner.

3. That the Contractor will re-execute, correct, repair, or remove and replace with proper work, without cost to the Owner, any work found to be deficient. The Contractor shall also make good all damages caused to their work or materials in the process of complying with this section.

4. That the entire work shall be water-tight and leak-proof.

1.17 OPERATION AND MAINTENANCE MANUALS

A. The Contractor shall have prepared three (3) hardcopies and one (1) electronic copy of the Operation and Maintenance Manual and deliver these copies of the manual to the Owner. The manual shall be as specified herein. The manual must be approved and will not be accepted as final until so stamped.

B. The manual shall be bound in a three-ring loose-leaf binder similar to National No. 3881 with the following title lettered on the front: *Operation and Maintenance Manual – DTCC Owens Campus Carter Center Fume Hood Ventilation System – Electronic Safety and Security.* No sheets larger than 8-1/2 inches x 11 inches shall be used, except sheets that are neatly folded to

8-1/2 inches x 11 inches and used as a pull-out. Provide divider tabs and table of contents for organizing and separating information.

C. Provide the following data in the manual:

1. As first entry, an approved letter indicating the starting/ending time of Contractor's warranty period.

2. Maintenance operation and lubrication instructions on each piece of equipment furnished.

3. Complete catalog data on each piece of electrical equipment furnished including approved Shop Drawing/Submittal with Engineer's Comments (if any).

4. Manufacturer's extended limited warranties on equipment.

5. Provide sales and authorized service representatives names, address, and phone numbers of all equipment and subcontractors.

6. Provide supplier and subcontractor's names, address, and phone number.

7. Catalog data of all equipment, starters, etc. shall include wiring diagrams, parts list and assembly drawing.

8. Access panel charts with index illustrating the location and purpose of access panels.

9. Approved Inspection Certificates.

10. Start-up reports for equipment.

D. Submit Operation and Maintenance Manual prior to anticipated date of Substantial Completion for Engineer review and approval. Substantial Completion requires that Operation and Maintenance Manuals be reviewed and approved.

E. Deliver all instruction materials to the Owner prior to the formal instruction period.

F. Upon completion of all work, thoroughly instruct the Owner's representatives in the proper operation and maintenance of all electrical equipment and systems.

G. Instructions shall be done only after completed systems have been put into operation and tested for proper operation and performance.

H. Instructions shall be given only by experts in the equipment or system and shall include descriptions and demonstrations of procedures of operation, data record keeping, etc.

I. Furnish the necessary technicians, skilled workers, and helpers to operate the electrical systems and equipment of the entire project for one (1) 8-hour day.

J. Where specified in technical sections, provide longer periods required for specialized equipment.

K. Instruct the Owner or designated personnel in operation, maintenance, lubrication, and adjustment of systems and equipment.

L. The Operation and Maintenance Manual shall be available at the time of the instructions, for use by Instructors and Owner personnel.

M. Schedule the general and specialized instruction periods for a time agreed upon by the Owner and Engineer.

1.18 INSTALLATION AND COORDINATION DRAWINGS

A. Prepare, submit and use composite installation and coordination drawings to assure proper coordination and installation of the work. Drawings shall include, but not be limited to the following:

1. Mechanical Rooms indicating duct detectors, remote test stations, carbon monoxide detectors, ductwork, and piping, etc…

2. Electrical Rooms indicating fire alarm control panels, NAC panels, amplifiers, etc. as well as all electrical equipment in each space.

B. Draw plans to a scale not less than ¼ inch equals one foot. Include plans, sections and elevations of the proposed work, showing all equipment (mechanical, plumbing and electrical), conduit and wiring in the areas involved. Fully dimension all work, horizontally and vertically. Show coordination with other work including piping, ductwork and other mechanical work, walls, doors, ceilings, columns, beams, joists and other architectural and structural work.

C. Identify all equipment and devices on wiring diagrams. Where field connections are shown to factory-wired terminals, furnish manufacturer's literature showing internal wiring of equipment.

D. Prepare scaled coordination drawings in accordance with the Specifications. Indicate locations where space is limited for installation and access and where sequencing and coordination of installations are of importance to the efficient flow of the Work, including (but not necessarily limited to) the following:

1. Indicate the proposed locations of power, lighting, and all special system raceways, equipment, and materials. Include the following:

a. Working space and dedicated space clearances per the NEC.
b. Clearances for equipment disassembly required for periodic maintenance.
c. Exterior wall and foundation penetrations.
d. Fire-rated wall and floor penetrations.
e. Equipment connections and support details.

2. Indicate scheduling, sequencing, movement, and positioning of large equipment into the building during construction, including, but not limited to, the following: Major conduits and feeders.

3. Prepare floor plans, elevations, and details to indicate penetrations in floors, walls, and ceilings and their relationship to other penetrations and installations.

4. The successful Bidder shall be responsible for indicating all raceways described in notes or indicated by home run symbols.

E. The complete set of Mechanical and Electrical Drawings and Specifications apply to this work. The successful bidder shall familiarize himself with all other related documents to avoid possible installation conflicts.

PART 2 PRODUCTS

2.1 SLEEVES FOR RACEWAYS AND CABLES

A. Steel Pipe Sleeves: ASTM A 53/A 53M, Type E, Grade B, Schedule 40, galvanized steel, plain ends.

B. Cast-Iron Pipe Sleeves: Cast or fabricated "wall pipe," equivalent to ductile-iron pressure pipe, with plain ends and integral waterstop, unless otherwise indicated.

C. Sleeves for Rectangular Openings: Galvanized sheet steel.

1. Minimum Metal Thickness:

a. For sleeve cross-section rectangle perimeter less than 50 inches (1270 mm) and no side more than 16 inches (400 mm), thickness shall be 0.052 inch (1.3 mm).
b. For sleeve cross-section rectangle perimeter equal to, or more than, 50 inches (1270 mm) and 1 or more sides equal to, or more than, 16 inches (400 mm), thickness shall be 0.138 inch (3.5 mm).

2.2 GROUT

A. Nonmetallic, Shrinkage-Resistant Grout: ASTM C 1107, factory-packaged, nonmetallic aggregate grout, noncorrosive, nonstaining, mixed with water to consistency suitable for application and a 30-minute working time.

PART 3 EXECUTION

3.1 TEMPORARY FACILITIES:

A. General: Refer to the Division 01 Sections for general requirements of temporary facilities.

B. Description: Furnish and install the necessary equipment for temporary fire alarm connections and all temporary wiring as required.

C. Attention is directed to the Occupational Safety and Health Act (OSHA), Americans with Disabilities Act (ADA) and National Electrical Code (NEC) requirements for electrical work on construction sites.

D. Remove all temporary installations and connections after permanent power is established and/or prior to completion of the project.

3.2 COMMON REQUIREMENTS FOR ELECTRONIC SAFETY AND SECURITY INSTALLATION

A. Comply with NECA 1.

B. Measure indicated mounting heights to bottom of unit for suspended items and to center of unit for wall-mounting items.

C. Headroom Maintenance: If mounting heights or other location criteria are not indicated, arrange and install components and equipment to provide maximum possible headroom consistent with these requirements.

D. Install equipment with working space and dedicated space in strict accordance with NEC Article 110.

E. Equipment: Install to facilitate service, maintenance, and repair or replacement of components of both electrical equipment and other nearby installations. Connect in such a way as to facilitate future disconnecting with minimum interference with other items in the vicinity.

F. Install equipment level and plumb, parallel and perpendicular to other building systems and components in exposed interior spaces, unless otherwise indicated.

G. Verify exact requirements for each piece of equipment receiving one or more fire alarm connections.

H. Include any and all items required by the National Electrical Code, NFPA 72, and/or field conditions for the proper connection and installation of each piece of equipment.

I. Make all connections to equipment in accordance with manufacturer's instructions.

J. Right of Way: Give to piping systems installed at a required slope.

K. Coordinate electronic safety and security work under other Divisions in accordance with Part 1 of this Section, Article "Electronic Safety and Security Work Under Other Divisions".

3.3 SLEEVE INSTALLATION FOR ELECTRONIC SAFETY AND SECURITY PENETRATIONS

A. Penetrations occur when raceways, cables, wireways, cable trays, or busways penetrate concrete slabs, concrete or masonry walls, or fire-rated floor and wall assemblies.

B. Concrete Slabs and Walls: Install sleeves for penetrations unless core-drilled holes or formed openings are used.

C. Use pipe sleeves unless penetration arrangement requires rectangular sleeved opening.

D. Fire-Rated Assemblies: Install sleeves for penetrations of fire-rated floor and wall assemblies unless openings compatible with firestop system used are fabricated during construction of floor or wall.

E. Cut sleeves to length for mounting flush with both surfaces of walls.

F. Extend sleeves installed in floors 2 inches (50 mm) above finished floor level.

G. Size pipe sleeves to provide 1/4-inch (6.4-mm) annular clear space between sleeve and raceway or cable, unless indicated otherwise.

H. Seal space outside of sleeves with grout for penetrations of concrete and masonry

1. Promptly pack grout solidly between sleeve and wall so no voids remain. Tool exposed surfaces smooth; protect grout while curing.

I. Interior Penetrations of Non-Fire-Rated Walls and Floors: Seal annular space between sleeve and raceway or cable, using joint sealant appropriate for size, depth, and location of joint.

J. Fire-Rated-Assembly Penetrations: Maintain indicated fire rating of walls, partitions, ceilings, and floors at raceway and cable penetrations. Install sleeves and seal raceway and cable penetration sleeves with firestop materials. Comply with requirements of Division 26 Section “Electrical Firestopping”.

3.4 FIRESTOPPING

A. Apply firestopping to penetrations of fire-rated floor and wall assemblies for electrical installations to restore original fire-resistance rating of assembly. Firestopping materials and installation requirements are specified in Division 26 Section, "Electrical Firestopping".

3.5 SUPPORTS, HANGERS AND FOUNDATIONS

A. Provide supports, hangers, braces, attachments and foundations required for the work. Support and set the work in a thoroughly substantial and workmanlike manner without placing strains on materials, equipment, or building structure, submit shop drawings for approval. Coordinate all work with the requirements of the structural division.

B. Supports, hangers, braces, and attachments shall be standard manufactured items or fabricated structural steel shapes. All interior hangers shall be galvanized or steel with rust inhibiting paint. All exterior hangers shall be constructed of stainless steel utilizing stainless steel rods, nuts, washers, bolts, etc.

C. Refer to Division 26 Section “Hangers and Supports” for additional requirements.

3.6 PROVISIONS FOR ACCESS

A. The Contractor shall provide access panels and doors for all concealed equipment, and other devices requiring maintenance, service, adjustment or manual operation.

B. Where access doors are necessary, furnish and install manufactured painted steel door assemblies consisting of hinged door, key locks, and frame designed for the particular wall or ceiling construction. Properly locate each door. Door sizes shall be a 12 inches x 12 inches for hand access, 18 inches x 18 inches for shoulder access and 24 inches x 24 inches for full body access where required. Review locations and sizes with Architect prior to fabrication. Provide U.L. approved and labeled access doors where installed in fire rated walls or ceilings. Doors shall be Milcor Metal Access Doors as manufactured by Inland-Ryerson, Mifab, or approved equal.

1. Acoustical or Cement Plaster: Style B

2. Hard Finish Plaster: Style K or L

3. Masonry or Dry Wall: Style M

C. Where access is by means of liftout ceiling tiles or panels, mark each ceiling grid using small color-coded and numbered tabs. Provide a chart or index for identification. Place markers within ceiling grid not on ceiling tiles.

D. Access panels, doors, etc. described herein shall be furnished under the section of Specifications providing the particular service and to be turned over to the pertinent trade for installation. Coordinate installation with installing Contractor. All access doors shall be painted in baked enamel finish to match ceiling or wall finish.

E. Submit shop drawings indicating the proposed location of all access panels/doors. Access doors in finished spaces shall be coordinated with air devices, lighting and sprinklers to provide a neat and symmetrical appearance.

F. Provide sufficient access and working space for repair and maintenance about all lighting and electrical equipment to permit ready and safe operation and maintenance of such equipment in accordance with OSHA 29 CFR 1910 Subpart D and 1910.303(g).

3.7 PAINTING AND FINISHES

A. Provide protective finishes on all materials and equipment. Use coated or corrosion-resistant materials, hardware and fittings throughout the work. Paint bare, untreated ferrous surfaces with rust-inhibiting paint. All exterior components including supports, hangers, nuts, bolts, washers, vibration isolators, etc. shall be stainless steel.

B. Clean surfaces prior to application of insulation, adhesives, coatings, paint, or other finishes.

C. Provide factory-applied finishes where specified. Unless otherwise indicated factory-applied paints shall be baked enamel with proper pretreatment.

D. Protect all finishes and restore any finishes damaged as a result of work under Division 26 to their original condition.

E. The preceding requirements apply to all work, whether exposed or concealed, as defined herein.

F. Remove all construction marking and writing from exposed equipment, ductwork, piping and building surfaces. Do not paint manufacturer's labels or tags.

G. All exterior equipment and conduits shall be painted to match adjacent surface in color as selected by Owner.

H. All exposed conduit, boxes, equipment, etc. in finished spaces shall be painted. Colors shall be as selected by the Owner and conform to ANSI Standards.

3.8 COLOR SELECTION

A. Color of finishes shall be as selected by the Owner.

3.9 PROTECTION OF WORK

A. Protect work, material and equipment from weather and construction operations before and after installation. Properly store and handle all materials and equipment.

B. Cover temporary openings in conduits and equipment to prevent the entrance of water, dirt, debris, or other foreign matter. Deliver conduits with factory applied end caps.

C. Cover or otherwise protect all finishes.

D. Replace damaged materials, devices, finishes and equipment.

E. Protect stored conduits from moisture and dirt. Elevate above grade. Do not exceed structural capacity of floor, where stored inside.

3.10 OPERATION OF EQUIPMENT

A. Clean all systems and equipment prior to initial operation for testing, or other purposes. Lubricate, adjust, and test all equipment in accordance with manufacturer's instructions. Do not operate equipment unless all proper safety devices or controls are operational. Provide all maintenance and service for equipment that is authorized for operation during construction.

B. Where specified, or otherwise required, provide the services of the manufacturer's factory-trained servicemen or technicians to start up the equipment. Where factory start-up of equipment is not specified, provide field start-up by qualified technician.

C. Submit factory start-up sheets or field start-ups sheets for all equipment prior to the commencement of testing.

D. Do not use electronic safety and security systems for temporary services or during construction, unless approved by Owner in writing. Refer to Division 01 Section "Temporary Facilities and Controls".

E. Upon completion of work, clean and restore all equipment to new conditions; replace expendable items.

3.11 TESTING AND ADJUSTMENT

A. Perform all tests which are specified or required to demonstrate that the work is installed and operating properly. Where formal tests are required, give proper notices and perform all necessary preliminary tests to assure that the work is complete and ready for final test.

B. Adjust all systems, equipment and controls to operate in a safe, efficient and stable manner.

C. Provide circuits that are free from ground faults, short circuits and open circuits.

D. Other tests of a specific nature for special equipment shall be as specified under the respective equipment.

E. Submit all test results to the Engineer for approval.

3.12 WALL AND FLOOR PENETRATIONS

A. All penetrations of partitions, ceilings, roofs and floors under Division 28 shall be sleeved, sealed, and caulked as specified herein.

B. All penetrations of fire rated assemblies shall be sleeved, sealed, caulked and protected to maintain the rating of the wall, roof, or floor. Fire Marshal approved U.L. assemblies shall be utilized. See Division 26 Section, "Electrical Firestopping".

C. Provide conduit escutcheons for all exposed conduit penetrations in finished interior spaces and all exposed exterior penetrations.

D. Conduit sleeves:

1. Galvanized steel pipe, standard weight where pipes are exposed and roofs and concrete and masonry walls. On exterior walls provide anchor flange welded to perimeter.

2. Twenty-two (22) gauge galvanized steel elsewhere.

3.13 EQUIPMENT BY OTHERS

A. This Contractor shall make all system connections required to equipment furnished and installed under other divisions or furnished by the Owner. Connections shall be complete in all respects to render this equipment functional to its fullest intent.

B. It shall be the responsibility of the supplier of the equipment to furnish complete instructions for connections. Failure to do so will not relieve the Contractor of any responsibility for improper equipment operation.

3.14 CUTTING AND PATCHING

A. Accomplish all cutting and patching necessary for the installation of work under Division 28. Damage resulting from this work to other work already in place, shall be repaired at Contractor's expense. Where cutting is required, perform work in neat and workmanlike manner. Restore disturbed work to match and blend with existing construction and finish, using materials compatible with the original. Use mechanics skilled in the particular trades required.

3.15 PENETRATION OF WATERPROOF CONSTRUCTION

A. Coordinate the work to minimize penetration of waterproof construction, including roofs, exterior walls, and interior waterproof construction. Where such penetrations are necessary, furnish and install all necessary curbs, sleeves, flashings, fittings and caulking to make penetrations absolutely watertight.

B. Where conduits penetrate roofs, flash pipe with Stoneman *Stormtite,* Pate or approved equal, roof flashing assemblies with skirt and caulked counter flashing sleeve.

C. Furnish and install pitch pockets or weather tight curb assemblies where required.

3.16 CONNECTIONS AND ALTERATIONS TO EXISTING WORK

A. Unless otherwise noted on the Drawings, where existing electrical work is removed, including hangers, to a point below finished floors or behind finished walls and capped, such point shall be far enough behind finished surfaces to allow for installation of normal thickness of required finish material.

B. Where work specified in Division 28 connects to existing equipment, conduits, etc., Contractor shall perform all necessary alterations, cuttings, fittings, etc., of existing work as may be necessary to make satisfactory connections between new and existing work, and to leave completed work in a finished and workmanlike condition.

C. Where the work specified under Division 28, or under other Divisions, requires relocation of existing equipment, conduit etc., Contractor shall perform all work and make necessary changes to existing work as may be required to leave completed work in a finished and workmanlike condition.

D. Where the relocation of existing equipment is required for access or the installation of new equipment, the Contractor shall temporarily remove and/or relocate and re-install as required to leave the existing and new work in a finished and workman like condition.

3.17 COORDINATION

A. Coordinate arrangement, mounting, and support of electrical equipment:

1. To allow maximum possible headroom unless specific mounting heights that reduce headroom are indicated.

2. To provide for ease of disconnecting the equipment with minimum interference to other installations.

3. To allow right of way for piping and conduit installed at required slope.

4. So connecting raceways, cables, wireways, cable trays, and busways will be clear of obstructions and of the working and access space of other equipment.

5. To provide working space and dedicated space clearances per NEC Article 110.26.

B. Coordinate installation of required supporting devices and set sleeves in cast-in-place concrete, masonry walls, and other structural components as they are constructed.

C. Coordinate location of access panels and doors for electrical items that are behind finished surfaces or otherwise concealed. Access doors and panels are specified in Part 2 of this Section.

END OF SECTION

OUTAGE REQUEST FORM

DATE APPLIED: _____ BY: _____

DATE FOR OUTAGE: _____ FIRM: _____

START OUTAGE-TIME: _____ DATE:_____

END OUTAGE - TIME: _____ DATE:_____

AREAS AND ROOMS: _____

FLOOR(S): _____

AREA(S): _____

ROOM(S): _____

WORK TO BE PERFORMED: _____

SYSTEM(S): _____

REQUEST APPROVED BY: _____
(FOREMAN OR OTHER PERSON IN CHARGE)

(FOR OWNER'S USE ONLY):

APPROVED: _____

YES _____ NO ____ BY: _____DATE: _____

DATE/TIME-AS REQUESTED: _____ OTHER : _____

OWNER'S PRESENCE REQUIRED: _____

YES: ____ NO: ____ NAME: _____

POINT OF CONTACT: _____ PHONE: _____

DIVISION 28
SECTION 283112
FIRE ALARM SYSTEM – EXISTING SYSTEM EXPANSION
TABLE OF CONTENTS

PART 1 GENERAL

1.1 RELATED DOCUMENTS
1.2 SUMMARY
1.3 APPLICABLE PUBLICATIONS
1.4 QUALITY ASSURANCE
1.5 SCOPE

PART 2 PRODUCTS

2.1 FIRE ALARM DEVICES

PART 3 EXECUTION

3.1 GENERAL
3.2 SYSTEM TESTING
3.3 WARRANTY

SECTION 283112 FIRE ALARM SYSTEM

PART 1 GENERAL

1.1 RELATED DOCUMENTS

A. Drawings and general provisions of the Contract, including General and Supplementary Conditions and Division 01 Specification Sections, apply to this Section.

B. All work under this Section shall be subject to the requirements of Division 28 Section, "Common Work Results for Electronic Safety & Security".

1.2 SUMMARY

A. This section of the specification includes the furnishing, assembly, construction, installation, connection and testing of a complete fire alarm system as described herein and on the drawings.

B. All related work specified in other sections shall be properly coordinated with the fire alarm equipment.

C. The additions to the system shall include all wiring, raceways, pull boxes, terminal cabinets, outlet and mounting boxes, alarm initiating devices, alarm indicating devices, and control equipment, and all other accessories and miscellaneous items required for an operating system.

1.3 APPLICABLE PUBLICATIONS

A. Unless otherwise indicated, the system and its components specified, and their installation and operation shall conform to the latest applicable requirements of the following publications:

1. National Fire Protection Association (NFPA):

NFPA 70	National Electrical Code
NFPA 72	National Fire Alarm and Signaling Code
NFPA 72A	Standard for the Installation, Maintenance and Use of Local Protection Signaling Systems
NFPA 72E	Automatic Fire Detectors
NFPA 90A	Air Conditioning and Ventilating Systems
NFPA 101	Codes for Life Safety from Fire in Buildings and Structures

2. Underwriters Laboratories (UL):
   - Fire Protection Equipment Directory
   - Electrical Construction Materials Directory

3. Factory Mutual Approval Guide

4. Delaware State Fire Prevention Regulations

5. American Insurance Association Fire Protection Code (Article 14)

6. International Building Code (IBC)

7. Occupational Safety and Health Act

B. Acceptable evidence of compliance of components is a UL or FM label or listing or an independent certification, satisfactory to the Engineer, that the components meet the applicable standards.

1.4 QUALITY ASSURANCE

A. Qualification of Installer: The system shall be installed by an electrical contractor experienced in the installation of the fire alarm system. The services of a technician provided by the control equipment manufacturer shall be provided to supervise installation, adjustment, and tests and final connections of the system.

1.5 SCOPE

A. WORK INCLUDED

1. Furnish and install all additional fire alarm system wiring devices as indicated on the drawings.

2. Provide all required upgrades to the existing fire alarm system equipment to accommodate the additional fire alarm devices.

3. All fire alarm devices shall be connected to the existing Fire Alarm System which includes a Gamewell E3 series control panel.

B. Provide equipment submissions including the following:

1. Complete descriptive data indicating UL listing duct type smoke detectors.

2. Complete drawings of the proposed system showing conduit layout, wire count and device locations.

C. Detection Operation (Ceiling, Duct, and Heat)

1. Smoke sensors shall be smoke density measuring devices having no self contained alarm set point (fixed threshold). The alarm decision for each sensor shall be determined by the control panel. The control panel shall determine the condition of each sensor by comparing the sensor value to the stored values.

PART 2 PRODUCTS

2.1 FIRE ALARM DEVICES

A. Provide new duct detectors and remote test stations to be compatible with the existing Fire

Alarm System.

PART 3 EXECUTION

3.1 GENERAL

A. Provide and install the additions to the system in accordance with the plans and specifications, all applicable codes and the manufacturer's recommendations. All wiring shall be installed in strict compliance with all the provisions of NEC -Article 760 A and C, Power-Limited Fire Protective Signaling Circuits or if required may be reclassified as non-power limited and wired in accordance with NEC-Article 760 A and B. Upon completion, the contractor shall so certify in writing to the owner and general contractor. All junction boxes shall be spray painted red and labeled *Fire Alarm*. Wiring color code shall be maintained throughout the installation.

B. Installation of equipment and devices that pertain to other work in the contract shall be closely coordinated with the appropriate subcontractors.

C. Ensure that the final mounting location will provide convenient access to the enclosure for maintenance.

3.2 SYSTEM TESTING

A. The completed fire alarm system shall be fully tested by the contractor and the manufacturer's NICET CERTIFIED technical representative in the presence of the owner's representative. Upon completion of a successful test, the contractor shall so verify in writing to the Owner, and general contractor.

B. The following test shall be performed by the Fire Alarm Manufacturer's authorized representative. Each and every device shall be tested for it's intended function. Verify that each device is located in its appropriate location. Written verification of this test shall be provided to the owner, architect, and general contractor. This test shall be performed in accordance with NFPA 72.

3.3 WARRANTY

A. The equipment and wiring shall be warranted to be free from electrical and mechanical defects for a period of one (1) year commencing with start-up and owners beneficial use of any portion of the system. Warranty shall include all labor/travel time and parts.

END OF SECTION