AIR HANDLING UNIT SCHEDULE

UNIT NO.	TYPE	LOCATION	SERVICE	COOLING COIL DATA: CAPACITY TOTAL MBH	SENSIBLE MBH	AIR DATA SUPPLY CFM	MIN O.A. CFM	EAT (°F) EDB	EWB	LAT (°F) LDB	LWB	WATER DATA EWT	LWT	GPM	P.D. FT. OF H_2O	FAN DATA T.S.P. IN. WG	HP	RPM	ELECTRICAL DATA VOLTS/PHASE	CYCLE	HEATING COIL DATA CAP. MBH	AIR DATA MAX. F.V.	EDB	LDB	STEAM DATA LBS/HR	PSIG	P.D.(FT.)	OPERATING WEIGHT (LBS)	DIMENSIONS (IN.) LENGTH	HEIGHT	WIDTH	REMARKS
AHU-1	HORIZONTAL DRAW-THRU	LECTURE HALL ROOF	1ST FLOOR	1600	961	25,000	18,300	88.7	72.5	54.7	54.4	44	54	320	11.8	6	40	1750	208/3	60	852.5	500	27.0	58	902	15		13,000	240	87	114	TEMTROL MODEL DH-50 OR APPROVED EQUAL
AHU-2	HORIZONTAL DRAW-THRU	LECTURE HALL ROOF	2ND FLOOR	1030	650	16,500	10,350	85.6	70.1	53.5	53.3	44	54	207.3	4.7	6	30	1750	208/3	60	441	500	33.7	58	466.5	15		10,000	228	72	90	TEMTROL MODEL DH-32 OR APPROVED EQUAL
AHU-3	HORIZONTAL DRAW-THRU	LECTURE HALL ROOF	3RD FLOOR	1619	967	25,300	20,790	88.3	72.4	54.2	53.7	44	54	324	11.4	5.5	40	1750	208/3	60	1007.5	500	21.8	58	1065.4	15		14,000	246	87	126	TEMTROL MODEL DH-47 OR APPROVED EQUAL
AHU-4	HORIZONTAL DRAW-THRU	ROOF LEVEL 1	LECTURE HALL	189	117	5,250	2,250	84	71.4	57.0	56.4	44	54	38.6	20.3	2.0	5	1750	208/3	60	178	500	44.7	75.6	189	15		2820	150	53	60	TEMTROL MODEL DH-11 OR APPROVED EQUAL

FAN COIL UNIT SCHEDULE (4-PIPE SYSTEM)

UNIT NO.	TYPE	LOCATION	SERVICE	COOLING COIL DATA: CAPACITY TOTAL MBH	SENSIBLE MBH	AIR DATA SUPPLY CFM	MIN O.A. CFM	EAT EDB	EWB	LAT (°F) LDB	LWB	WATER DATA EWT	LWT	GPM	P.D. FT. OF H_2O	FAN DATA T.S.P. IN. WG	HP	RPM	ELECTRICAL DATA VOLTS/PHASE	CYCLE	HEATING COIL DATA CAP. MBH	AIR DATA MAX. F.V.	EDB	LDB	WATER DATA EWT	LWT	GPM	P.D.(FT.)	OPERATING WEIGHT (LBS)	DIMENSIONS (IN.) LENGTH	HEIGHT	WIDTH	REMARKS
FCU-1	HORIZONTAL	CEILING	CORRIDOR	26	24.8	1000		78	63.1	54.7	54	44	54	5.2		1.0	1/4		120/1	60	18.5	500	70	87	180	160	2.0						
FCU-2	HORIZONTAL	CEILING	CORRIDOR	18	17	800		78	64.7	57.7	57	44	54	3.6		1.0	1/4		120/1	60	15.6	500	70	88	180	160	2.0						
AHU-5	HORIZONTAL DRAW-THRU	ATTIC	LOBBY	62.5	59.5	6,600	600	79.2	73.1	70.9	70.6	44	54	13	10.0	2.0	3	1750	208/3	60	57	500					6.0		1800	96	40	70	

FAN SCHEDULE

FAN NO.	TYPE	LOCATION	SERVICE	CFM*	E.S.P. IN. WG.	RPM	ELECTRICAL DATA HP	VOLTS	PHASE	CYCLE	DRIVE	WEIGHT (LBS)	DIMENSIONS (IN.) LENGTH	HEIGHT	WIDTH	REMARKS
EF-1	UTILITY	ROOF OF LEVEL 1	LECTURE HALL EXHAUST	2,250	0.65	1200	1/2	208	3	60	BELT	170	35 1/2	38 1/2	35 1/2	LOREN COOK MODEL 165 CPV OR APPROVED EQUAL
EF-2	PRV	ROOF OF LEVEL 3	TOILET EXHAUST	2,400	1.0	1485	3/4	208	3	60	BELT	150	35 1/2	38 1/2	35 1/2	–
EF-3, EF-4	RADIAL ROOF EXHAUSTER	ROOF OF LEVEL 3	FUME HOOD EXHAUST LEVEL1	17,500	3	1170	20	208	3	60	DIRECT	1320	–	128	56ø	STROBIC AIR OR APPROVED EQUAL
EF-5, EF-6	RADIAL ROOF EXHAUSTER	ROOF OF LEVEL 3	FUME HOOD EXHAUST LEVEL2	9,000	3	1170	15	208	3	60	DIRECT	900	–	109	52ø	STROBIC AIR OR APPROVED EQUAL
EF-7, EF-8	RADIAL ROOF EXHAUSTER	ROOF OF LEVEL 3	FUME HOOD EXHAUST LEVEL3	20,000	3	1170	25	208	3	60	DIRECT	1320	–	128	56ø	STROBIC AIR OR APPROVED EQUAL
EF-9	PRV	ATTIC WALL	ATTIC	1000	0.25	1110	1/6	120	1	60	BELT	120	–			WALL MOUNTED
EF-10																NOT USED
EF-11	IN-LINE	MECH. ROOM	EXHAUST	3,120	0.50	1242	2	208	3	60	BELT	360	33	32	32	LOREN COOK MODEL 195 SQ1-B OR APPROVED EQUAL
EF-12	RADIAL ROOF EXHAUSTER	ROOF OF LEVEL 3	RADIATION RMS. LEVEL 1	1,500	2.5	1170	5	208	3	60	BELT					STROBIC AIR OR APPROVED EQUAL
EF-13	IN-LINE	RECEIVING	RECEIVING	450	0.50		1/4	120	1	60	BELT					
EF-14	PRV	ROOF OF LEVEL 2	STORAGE RECEIVING	650	0.50		1/4	120	1	60	DIRECT					
EF-15	PRV	ROOF OF LEVEL 3	RECEIVING	450	2.5		1/4	120	1	60	DIRECT					
EF-16	IN-LINE	MECH. RM.	EXHAUST ELEC. RM.	1200	0.5	1173	1/4	120	1	60	BELT	232	23	22 5/8	22 5/8	LOREN COOK MODEL 135 SQ1-B OR APPROVED EQUAL
SF-1	IN-LINE	MECH. RM.	VENTILATION ELEC. RM.	1200	0.5	1173	1/4	120	1	60	BELT	232	23	22 5/8	22 5/8	LOREN COOK MODEL 135 SQ1-B OR APPROVED EQUAL
RF-1	IN-LINE	ROOF OF LECTURE HALL	RETURN LEVEL 1	9,000	1.25		5	208	3	60	BELT					WEATHER PROOF FOR OUTDOOR
RF-2	IN-LINE	ROOF OF LECTURE HALL	RETURN LEVEL 2	7,000	1.25		3	208	3	60	BELT					WEATHER PROOF FOR OUTDOOR
RF-3	IN-LINE	ROOF OF LECTURE HALL	RETURN LEVEL 3	3,000	1.0		1 1/2	208	3	60	BELT					WEATHER PROOF FOR OUTDOOR
RF-4	IN-LINE	ATTIC	LOBBY RETURN/EXHAUST	6,000/12,000	0.5/0.75	580/1025	7 1/2	208	3	60	BELT	450	45 3/8	42	42	WEATHER PROOF FOR OUTDOOR

DIFFUSERS, REGISTERS AND GRILLS SCHEDULE

TAG NO.	MOUNTING	MAX. NECK VELOCITY (FPM)	MAX. SP. IN. WG.	MAX. NC	FINISH COLOR	MANUFACTURER AND MODEL NUMBERS	REMARKS
CD-1	CEILING	600	0.1	30	BY ARCH.	TITUS TLF	24x24 LAMINAR FLOW SUPPLY DIFFUSER
CD-2	CEILING	600	0.1	30	BY ARCH.	TITUS TLF	24x48 LAMINAR FLOW SUPPLY DIFFUSER
CD-3	CEILING	600	0.1	30	BY ARCH.	TITUS PCS	24x24 PERFORATED FACE SUPPLY DIFFUSER
CD-4	CEILING	600	0.1	20	BY ARCH.	TITUS TDCA	24x24 LOUVERED CEILING DIFFUSER
CD-5	CEILING	600	0.1	30	BY ARCH.	TITUS PCS	12x12 PERFORATED FACE CEILING DIFFUSER
LD-1	CEILING	600	0.1	30	BY ARCH.	TITUS TBDI-80	48" LONG LINEAR DIFFUSER, 2 SLOTS, 3/4" WIDE
SR-1	CEILING/WALL	600	0.1	30	BY ARCH.	TITUS 300 RL	SUPPLY REGISTER
R-1	CEILING	600	0.1	30	BY ARCH.	TITUS PAR	24x24 PERFORATED FACE RETURN REGISTER
R-2	CEILING/WALL	600	0.1	30	BY ARCH.	TITUS 350 RL	RETURN REGISTER
E-1	CEILING	600	0.1	30	BY ARCH.	TITUS PAR	24x24 PERFORATED FACE EXHAUST REGISTER
E-2	CEILING/WALL	600	0.1	30	BY ARCH.	TITUS 350 RL	EXHAUST REGISTER
G-1	CEILING/WALL	600	0.05	30	BY ARCH.	TITUS 350 RL	TRANSFER GRILLE

HOT WATER UNIT HEATER SCHEDULE

UNIT NO.	CFM	CAPACITY (BTU/HR)	WATER DATA GPM	EWT (°F)	LWT (°F)	P.D.(FT)	AIR DATA TEMP. RISE (°F)	FAN MOTOR HP	VOLTS	PHASE	CYCLE	REMARKS
UH-1	1500	50,000	5.0	180	160	0.68	30.5	1/8	120	1	60	TRANE MODEL 100-S OR APPROVED EQUAL
UH-2	1500	50,000	5.0	180	160	0.68	30.5	1/8	120	1	60	TRANE MODEL 100-S OR APPROVED EQUAL
UH-3	1500	50,000	5.0	180	160	0.68	30.5	1/8	120	1	60	TRANE MODEL 100-S OR APPROVED EQUAL

COOLING TOWER SCHEDULE

UNIT NO.	NOMINAL CAPACITY (TONS)	WATER FLOW (GPM)	EWT (°F)	LWT (°F)	ENTERING WET BULB TEMP. (°F)	MAKE-UP WATER (GPM)	MAX. DRAIN-DOWN (GALLONS)	ELECTRICAL DATA BASIN HEATER CAPACITY (KW)	FAN (HP)	VOLTS	PHASE	CYCLE	PHYSICAL DIMENSIONS LENGTH	WIDTH	HEIGHT	INSTALLED HEIGHT	OPERATING WEIGHT (LBS)	REMARKS
CT-1	350	1050	95	85	78	16	802	7	15	208	3	60	6'-4 1/2"	17'-1 3/4"	8'-9"	10'-1 1/2"	11360	MARLEY MODEL NC 5001 OR APPROVED EQUAL
CT-2	350	1050	95	85	78	16	802	7	15	208	3	60	6'-4 1/2"	17'-1 3/4"	8'-9"	10'-1 1/2"	11360	MARLEY MODEL NC 5001 OR APPROVED EQUAL

WATER-COOLED CHILLER SCHEDULE

UNIT NO.	NOMINAL CAPACITY (TONS)	EWT (°F)	LWT (°F)	WATER FLOW (GPM)	EVAPORATOR PRESSURE DROP (FT. WG)	CONDENSER DATA WATER FLOW (GPM)	EWT (°F)	LWT (°F)	PRESS DROP (FT. WG)	KW/TON	COMPRESSOR RATING (KW)	ELECTRICAL DATA VOLTS	PHASE	CYCLE	RLA (AMP)	LRA (AMP)	PHYSICAL DIMENSIONS LENGTH	WIDTH	HEIGHT	OPERATING WEIGHT (LBS)	REMARKS
CH-1	350	54	44	840	12	1050	85	95	12	0.571	200	208	3	60	735	5260	15'-11"	6'-/2"	7'-4"	13700	TRANE MODEL CVHE 360 OR APPROVED EQUAL
CH-2	350	54	44	840	12	1050	85	95	12	0.571	200	208	3	60	735	5260	15'-11"	6'-/2"	7'-4"	13700	TRANE MODEL CVHE 360 OR APPROVED EQUAL

HEAT RECOVERY COILS SCHEDULE

COIL NO.	CFM	MAX. FACE VEL. (FPM)	MAX. AIR P.D. (INCH.)	35% GLYCOL (GPM)	MIN. COIL CAPACITY * MBH	MAX. WATER P.D. (FT. WATER)	LOCATION	REMARKS
HRC-1	25,000	500	0.50	100	120	3.0	AHU-1	
HRC-1A	18,000	650	0.70	100	120	8.0	FIRST FLOOR LAB EXHAUST DUCT	
HRC-2	17,000	500	0.50	90	81	3.0	AHU-2	
HRC-2A	9,000	550	0.65	90	81	5.5	SECOND FLOOR LAB EXHAUST DUCT	
HRC-3	25,300	500	0.50	100	120	3.0	AHU-3	
HRC-3A	18,000	650	0.70	100	120	8.0	THIRD FLOOR LAB EXHAUST DUCT	

* COIL CAPACITY BASED ON SUMMER DESIGN CONDITIONS

AIR COOLED CONDENSING UNIT SCHEDULE

UNIT NO.	TOTAL MBH	SYSTEM EER	TOTAL SYSTEM K.W.	AMBIENT AIR TEMP. (°F)	EVAP. E.A.T. DB(°F)	WB(°F)	UNIT ELECTRICAL DATA COMPRESSOR NO.	RLA	LRA	CONDENSER FAN NO.	HP	FLA	VOLT	PHASE	HERTZ	DIMENSIONS (IN) WIDTH	DEPTH	HEIGHT	WEIGTH (LBS)	REMARKS
ACCU-1	18	9.5		95	85	67	1	8.9	49.0	1		0.7	208	1	60	37	16	25 1/8	170	CARRIER MODEL 38QR018 OR APPROVED EQUAL
ACCU-2	24	9.5		95	85	67	1	10.9	61.0	1		0.7	208	1	60	37	16	25 1/8	173	CARRIER MODEL 38QR024 OR APPROVED EQUAL

THE MARSHALL GROUP LTD., ARCHITECTS
590 HERNDON PARKWAY ◆ SUITE 130 ◆ HERNDON ◆ VIRGINIA 22070
(703) 478-9500

JOHN J. CHRISTIE & ASSOCIATES, P.C.
CONSULTING ENGINEERS
5028 WISCONSIN AVENUE, N.W., SUITE 200
WASHINGTON, D.C. 20016

No.	DESCRIPTION	DATE	BY

REVISIONS

DELAWARE STATE COLLEGE
SCIENCE CENTER ANNEX
DOVER, DELAWARE

EQUIPMENT SCHEDULES
HVAC

DATE: 10/22/93
DESIGN: KS
DRAWN: SA/DM
CHECK: AN
JOB NO.: 9103.03

SHEET No. M002

SHEET: OF

FILE NAME: DS-M002
DATE PLOTTED:

FIRST FLOOR–VAV AND CV BOX AIR & WATER BALANCING SCHEDULE

MARK	ROOM SERVED	BOX AIR DATA: SUPPLY AIR MAX. CFM	SUPPLY AIR MIN. CFM	MIN. INLET PRESS. IN. WG	EXH. AIR MAX. CFM	EXH. AIR MIN. CFM	PRESSURIZATION AIR–CFM	COIL HOT WATER DATA: CAPACITY MBH	EWT °F	GPM	REMARKS
VVR1-1	105	1280	590	0.5	1380	690	100	26.1	180	2.6	
VVR1-2	106A	760	200	0.5	840	280	80	13.2	180	1.3	
VVR1-3	106	1280	590	0.5	1380	690	100	38.5	180	4.0	
VVR1-4	107	720	360	0.5				9.7	180	1.0	
VVR1-5	113	1800	900	0.5				31.4	180	3.2	
VVR1-6	114	900	450	0.5				19.4	180	2.0	
VVR1-7	117,118,118A	580	290	0.5				10.7	180	1.1	
VVR1-8	120	1280	590	0.5	1380	690	100	26.1	180	3.0	
VVR1-9	119	450	225	0.5				10.7	180	1.1	
VVR1-10	121A	740	185	0.5	795	240	55	12.8	180	1.5	
VVR1-11	121	1280	590	0.5	1380	690	100	26.1	180	2.6	
VVR1-12	124,124A	390	200	0.5				5.8	180	0.6	
VVR1-13	125,125A	360	180	0.5				5.7	180	0.6	
VVR1-14	126,126A	1300	500	0.5	1400	600	100	26.4	180	3.0	
VVR1-15	127,127A	1920	500	0.5	2020	600	100	35.9	180	4.0	
VVR1-16	129	760	205	0.5	835	280	75	17.1	180	2.0	
VVR1-17	130C	400	200	0.5	450	250	50	12.2	180	1.5	
VVR1-18	130,130A,130B	1000	290	0.5	1060	350	60	16.0	180	1.6	
VVR1-19	131	270	135	0.5	320	185	50	8.1	180	1.0	
VVR1-20	132	960	250	0.5	1060	350	100	18.7	180	2.0	
VVR1-21	133	270	135	0.5	320	185	50	8.1	180	1.0	
VVR1-22	134,134A	1300	400	0.5	1460	560	160	29.3	180	3.0	
VVR1-23	135,134B,134C	350	180	0.5	270	100	80	5.6	180	0.6	
VVR1-24	136	1320	420	0.5	1420	520	100	39.7	180	4.0	
CVR1-1	10,11,109,110	750	750	0.5	750	750		17.1	180	2.0	
CVR1-2	12,108	900	900	0.5				18.9	180	2.0	
CVR1-3	13	300	300	0.5				10.6	180	1.1	
CVR1-4	14	300	300	0.5				5.0	180	0.5	
CVR1-5	17	300	300	0.5				5.0	180	0.5	
CVR1-6	17	300	300	0.5				5.0	180	0.5	

SECOND FLOOR–VAV AND CV BOX AIR & WATER BALANCING SCHEDULE

MARK.	ROOM SERVED	BOX AIR DATA: SUPPLY AIR MAX. CFM	SUPPLY AIR MIN. CFM	MIN. INLET PRESS. IN. WG	EXH. AIR MAX. CFM	EXH. AIR MIN. CFM	PRESSURIZATION AIR–CFM	COIL HOT WATER DATA: CAPACITY MBH	EWT °F	GPM	REMARKS
VVR2-1	202	800	400	0.5				9.0	180	1.0	
VVR2-2	208,210	740	370	0.5				9.7	180	1.0	
VVR2-3	211	900	450	0.5				16.7	180	1.7	
VVR2-4	214,215,215A	580	290	0.5				9.3	180	1.0	
VVR2-5	217	840		0.5				17.6	180	1.8	
VVR2-6	216	450	225	0.5				7.2	180	1.0	
VVR2-7	218	840		0.5				17.6	180	1.8	
VVR2-8	219	1150	440	0.5	1250	540	100	21.9	180	2.2	
VVR2-9	220	1060	425	0.5	1160	525	100	20.5	180	2.1	
VVR2-10	220A	420	210	0.5	340	130	80	4.1	180	0.5	
VVR2-11	221	1060	470	0.5	1280	570	100	20.4	180	2.5	
VVR2-12	223	340	170	0.5				7.0	180	1.0	
VVR2-13	224,225,226	600	300	0.5				11.2	180	1.1	
VVR2-14	227,228A	1250	625	0.5	1350	525	100	23.2	180	2.5	
VVR2-15	228	1000	500	0.5	1100	600	100	18.5	180	2.0	
VVR2-16	229	440	220	0.5	490	270	50	10.3	180	1.0	
VVR2-17	230	1200	600	0.5	1200	600	0	23.3	180	2.5	
CVR2-1	20,21,204,205,206	950	950	0.5	950	950	0	26.4	180	3.0	
CVR2-2	22,203	600	600	0.5	600	600	0	10.5	180	1.1	
CVR2-3	23	300	300	0.5				5.0	180	0.5	
CVR2-4	24	300	300	0.5				5.0	180	0.5	
CVR-5	27	300	300	0.5				5.0	180	0.5	
CVR-6	27	300	300	0.5							

THIRD FLOOR–VAV AND CV BOX AIR & WATER BALANCING SCHEDULE

MARK.	ROOM SERVED	BOX AIR DATA: SUPPLY AIR MAX. CFM	SUPPLY AIR MIN. CFM	MIN. INLET PRESS. IN. WG	EXH. AIR MAX. CFM	EXH. AIR MIN. CFM	PRESSURIZATION AIR–CFM	COIL HOT WATER DATA: CAPACITY MBH	EWT °F	GPM	REMARKS
VVR3-1	301	900	450	0.5				16.3	180	1.6	
VVR3-2	307,309	790	395	0.5				13.5	180	1.4	
VVR3-3	310,311,314	900	450	0.5				19.5	180	2.0	
VVR3-4	315,316,316A	630	315	0.5				11.3	180	1.2	
VVR3-5	318	2400	600	0.5	2500	700	100	44.8	180	4.5	
VVR3-6	317	450	225	0.5				7.6	180	1.0	
VVR3-7	319A	740	185	0.5	795	240	55	13.2	180	1.3	
VVR3-8	319	2400	600	0.5	2500	700	100	44.8	180	4.5	
VVR3-9	320	1535	425	0.5	1635	525	100	30.0	180	3.0	
VVR3-10	321	1325	425	0.5	1425	525	100	25.8	180	2.6	
VVR3-11	322	1235	475	0.5	1335	575	100	25.8	180	2.6	
VVR3-12	322A	740	185	0.5	795	240	55	13.8	180	1.4	
VVR3-13	324,327	400	200	0.5				9.2	180	1.0	
VVR3-14	325	1325	425	0.5	1425	525	100	25.7	180	2.6	
VVR3-15	326	1325	425	0.5	1425	525	100	26.8	180	2.7	
VVR3-16	328	480	240	0.5				9.7	180	1.0	
VVR3-17	329	1535	425	0.5	1635	525	100	29.0	180	3.0	
VVR3-18	330	2400	600	0.5	2500	700	100	48.9	180	5.0	
VVR3-19	331	800	400	0.5				13.5	180	1.5	
CVR3-1	302	400	400	0.5				8.9	180	1.0	
CVR3-2	31,303,304	650	650	0.5				21.17	180	2.1	
CVR3-3	32,33	300	300	0.5				6.6	180	1.0	
CVR3-4	34	300	300	0.5				6.6	180	1.0	
CVR3-5	37	400	400	0.5				8.16	180	1.0	
CVR3-6	37	400	400	0.5				8.16	180	1.0	

STEAM TO HOT WATER CONVERTOR SCHEDULE

NO	TYPE	HEATING SURFACE (SQ. FT.)	CONVERTOR SIZE: DIA. (IN.)	CONVERTOR SIZE: LENGTH (IN.)	WATER INLET/ OUTLET (IN.)	GPM	HEATING SYSTEM: EWT (°F)	HEATING SYSTEM: LWT (°F)	HEATING SYSTEM: P.D. (FT.)	STEAM: PRESS. (PSIG.)	STEAM: INLET (IN.)	STEAM: LBS/HR.	STEAM: COND. OUTLET (IN.)	APPROX. WEIGHT (LBS)	REMARKS
HWC-1	SHELL & TUBE	56	10	53	4	190	160	180	1.0	15	4	1960	1 1/4	400	BELL & GOSSETT S01044 OR APPROVED EQUAL

EXPANSION TANK SCHEDULE

TANK NO	SERVICE	CAPACITY (GALLONS)	DIA. (IN.)	LENGTH (IN.)	APPROX. WT. (FLOODED) LBS	INITIAL FILL P. (PSIG)	RELIEF VALVE P. (PSIG)	REMARKS
XT-1	CHILLED WATER	120	24	65	1215	17	21	BELL & GOSETT MODEL 120 OR APPROVED EQUAL
XT-2	HOT WATER	135	24	72	1365	17	21	BELL & GOSETT MODEL 135 OR APPROVED EQUAL
XT-3	GLYCOL SYSTEM	7.8	12	19	110	17	21	BELL & GOSETT MODEL D-15 OR APPROVED EQUAL
XT-4	GLYCOL SYSTEM	7.8	12	19	110	17	21	BELL & GOSETT MODEL D-15 OR APPROVED EQUAL
XT-5	GLYCOL SYSTEM	7.8	12	19	110	17	21	BELL & GOSETT MODEL D-15 OR APPROVED EQUAL

CONDENSATE RETURN/ BOILER FEED PUMP SCHEDULE

UNIT NO	CAPACITY E.D.R. SQ. FT	DUPLEX PUMP: GPM	DISCHARGE PRESSURE	RPM	HP	ELECTRICAL DATA: VOLTS	PHASE	CYCLE	RECEIVER CAPACITY IN GALLONS	REMARKS
BFP-1	10,000	15	20	1750	1/2	208	1	60	15	SHIPCO MODEL 102 DMC OR APPROVED EQUAL
BFP-2					5	208	3	60		FULTON MODEL HT-80

AIR SEPARATOR SCHEDULE

UNIT NO	TANGENTIAL OPENING INLET/OUTLET (IN)	CAPACITY (GPM)	PRESSURE DROP WITH STRAINER (FT.) OF WATER	APPROXIMATE WEIGHT (LBS)	STRAINER FREE AREA IN SQ. INCH	REMARKS
AS-1	8	550	2	500	261	AMTROL 8-AS OR APPROVED EQUAL
AS-2	2	190	3	150	64	AMTROL 4-AS OR APPROVED EQUAL
AS-3 TO AS-5	3/3	190	3	160	N/A	BELL & GOSSET MODEL R-3 OR APPROVED EQUAL

BOILER–BURNER SCHEDULE

UNIT NO	STEAM SQ. FT.	GAS FIRING RATE MBH	OIL FIRING RATE GPH	HEATING -SURFACE FIRESIDE SQ. FT.	BOILER HP	OUTPUT MBH	STEAM PRESS. PSIG	ELECTRICAL DATA: BURNER HP	VOLT	PHASE	CYCLE	OPERATING WEIGHT (LBS)	DIMENSIONS: LENGTH	HEIGHT	WIDTH	REMARKS
B-1	17,450	5230	37.5	625	125	4184	15	5	208	3	60	20500	14'-7"	7'-2"	6'-4"	CLEVER BROOKS CB-200-125-1505 OR APPROVED EQUAL
B-2	17,450	5230	37.5	625	125	4184	15	5	208	3	60	20500	14'-7"	7'-2"	6'-4"	CLEVER BROOKS CB-200-125-1505 OR APPROVED EQUAL
B-3		9350	24.0	400	80		60	3	208	3	60			7'-8"	5'-1"9	FULTON ICS-80

PUMP SCHEDULE

PUMP NO	SERVICE	TYPE	GPM	HEAD (FT.)	RPM	HP	MIN. EFF. %	ELECTRICAL DATA: VOLTS	PHASE	CYCLE	REMARKS
P-1	CONDENSER WATER	END SUCTION	1050	35	1150	15	85	208	3	60	BELL & GOSSETT SERIES 1510, MODEL 6E OR APPROVED EQUAL
P-2	CONDENSER WATER	END SUCTION	1050	35	1150	15	85	208	3	60	BELL & GOSSETT SERIES 1510, MODEL 6E OR APPROVED EQUAL
P-3	CHILLED WATER	END SUCTION	840	65	1750	20	81	208	3	60	BELL & GOSSETT SERIES 1510, MODEL 5BC OR APPROVED EQUAL
P-4	CHILLED WATER	END SUCTION	840	65	1750	20	81	208	3	60	BELL & GOSSETT SERIES 1510, MODEL 5BC OR APPROVED EQUAL
P-5	HOT WATER	END SUCTION	160	65	1750	5	69	208	3	60	BELL & GOSSETT SERIES 1510, MODEL OR APPROVED EQUAL
P-6	HOT WATER	END SUCTION	160	65	1750	5	69	208	3	60	BELL & GOSSETT SERIES 1510, MODEL OR APPROVED EQUAL
GP-1	GLYCOL	END SUCTION	100	20	1750	1.0	60	208	3	60	BELL & GOSSETT MODEL 2AC OR APPROVED EQUAL
GP-2	GLYCOL	END SUCTION	100	20	1750	1.0	60	208	3	60	BELL & GOSSETT MODEL 2AC OR APPROVED EQUAL
GP-3	GLYCOL	END SUCTION	100	20	1750	1.0	60	208	3	60	BELL & GOSSETT MODEL 2AC OR APPROVED EQUAL

DX FAN COIL UNIT SCHEDULE

UNIT NO	TYPE	LOCATION	SERVICE	COOLING COIL DATA: CAPACITY TOTAL MBH	CAPACITY SENSIBLE MBH	AIR DATA: SUPPLY CFM	MIN O.A. CFM	EAT (°F) EDB	EAT EWB	LAT (°F) LDB	LAT LWB	FAN DATA: ES.P. IN WG	MOTOR OIL HP	RPM	VOLTS / PHASE	CYCLE	CONDENSER UNIT DATA	OPERATING WEIGHT (LBS)	DEMENSIONS (IN.): LENGTH	HEIGHT	WIDTH	REMARKS
FCU-3	HORIZONTAL	ELEVATOR MACHINE RM.	ELEVATOR MACHINE RM.	18	18	600		85	67	58	57	0	1/6		120 / 1	60	SEE ACCU-1		24	12	44	CARRIER MODEL 42 CG06 OR APPROVED EQUAL
FCU-4	HORIZONTAL	ELEVATOR MACHINE RM.	ELEVATOR MACHINE RM.	24	24	1000		85	67	58		0	1/2 (2)		120 / 1		SEE ACCU-2		24	12	65	CARRIER MODEL 42 CG10 OR APPROVED EQUAL

FLASH TANK SCHEDULE

FLASH TANK NO.	DIAMETER IN.	HEIGHT IN.	GALLONS HELD	GALLONS OF STEAM	PIPE SIZES: COND. IN	COND. OUT	VENT	REMARKS
FT-1	12	49 1/2	4 1/2	19 1/2	3"	2"	3"	SPIRAX SARCO MODEL 12 OR APPROVED EXIT

THE MARSHALL GROUP, LTD., ARCHITECTS
590 HERNDON PARKWAY • SUITE 130 • HERNDON • VIRGINIA 22070
(703) 478-9500

JOHN J. CHRISTIE & ASSOCIATES, P.C.
CONSULTING ENGINEERS
5028 WISCONSIN AVENUE, N.W. SUITE 200
WASHINGTON, D. C. 20016

REVISIONS

No.	DESCRIPTION	DATE	BY

DELAWARE STATE COLLEGE
SCIENCE CENTER ANNEX
DOVER, DELAWARE

EQUIPMENT SCHEDULES
HVAC

DATE: 10/22/93
DESIGN: KS
DRAWN: SA
CHECK: AN
JOB NO.: 9103.03

SHEET No.: M003
SHEET: OF

FILE NAME: DS-M003
DATE PLOTTED:

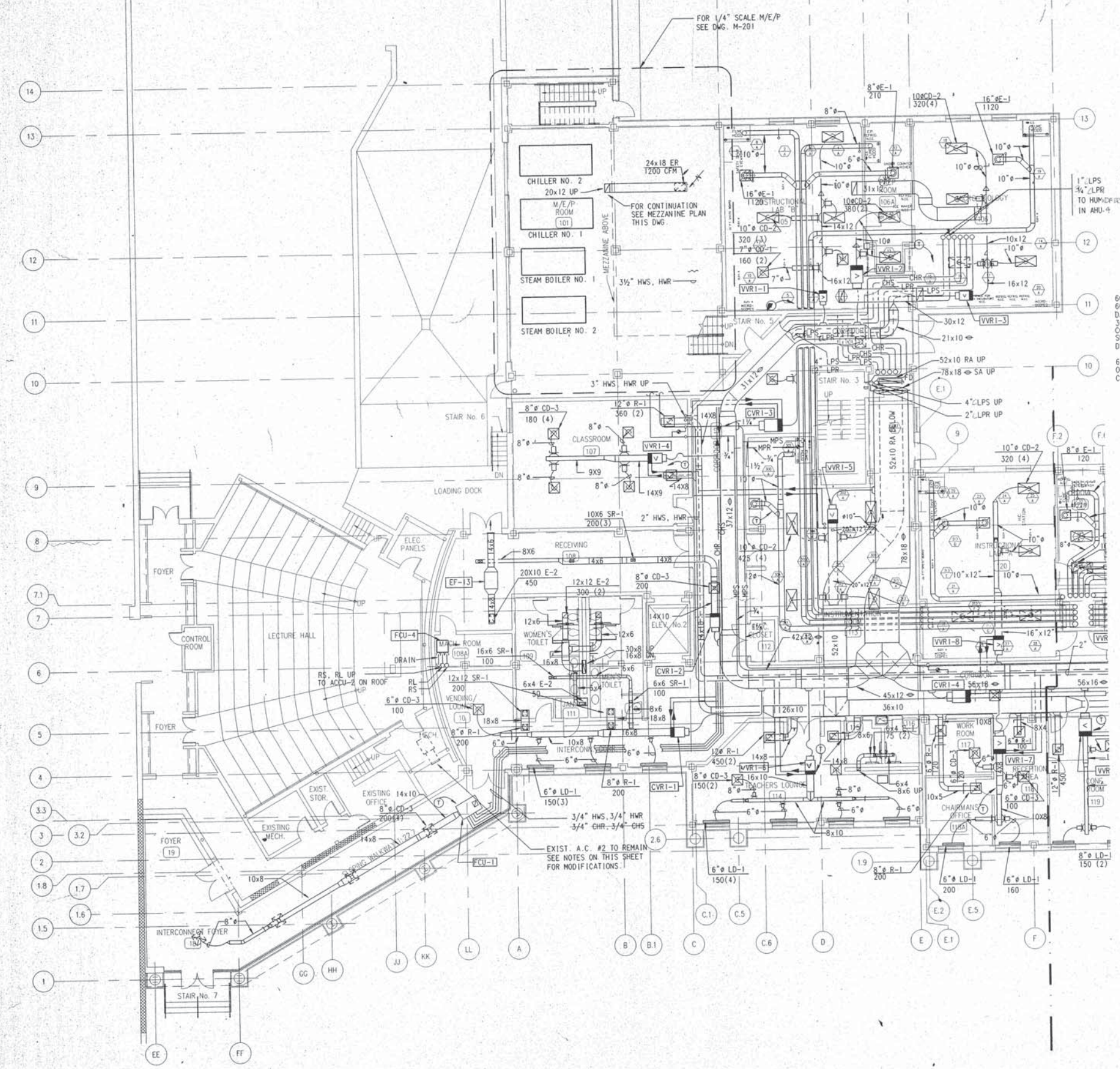

PARTIAL FIRST FLOOR PLAN

SCALE: 1/8" = 1'-0"

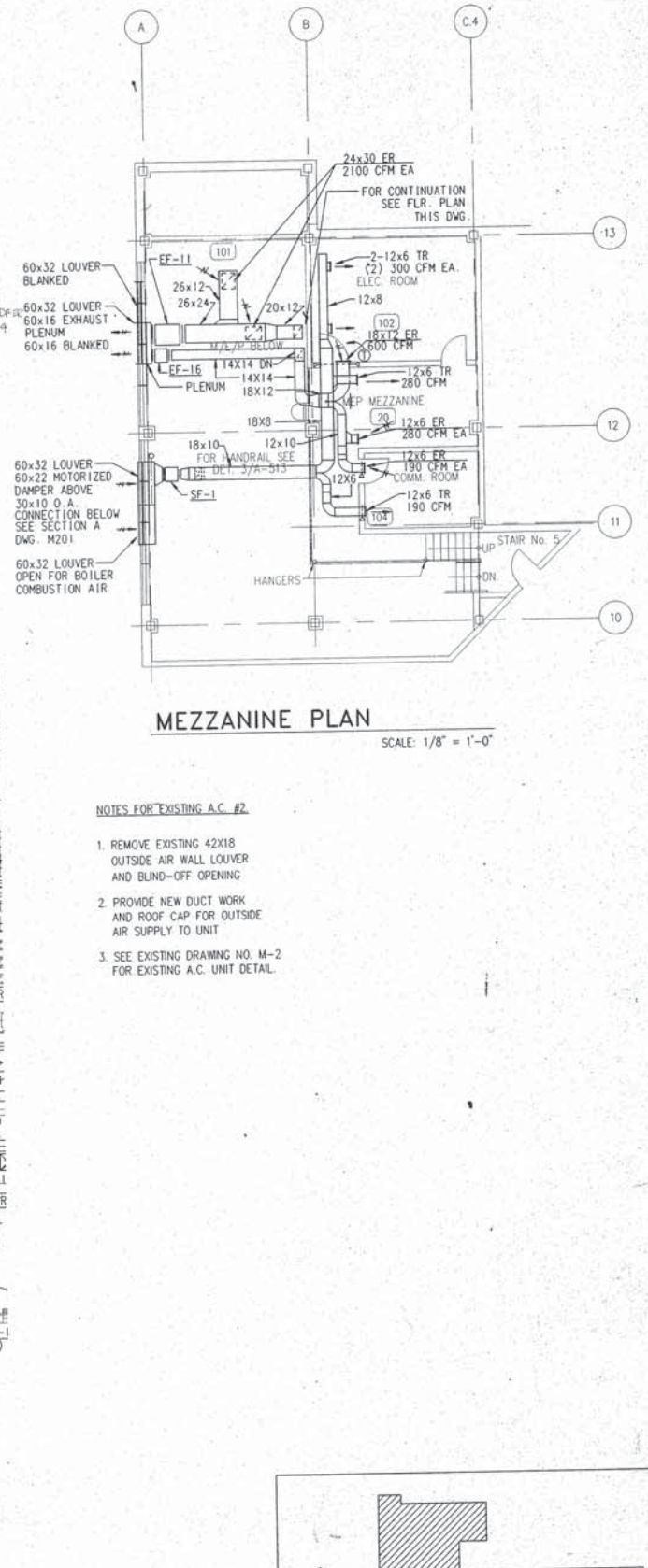

MEZZANINE PLAN

SCALE: 1/8" = 1'-0"

NOTES FOR EXISTING A.C. #2

1. REMOVE EXISTING 42X18 OUTSIDE AIR WALL LOUVER AND BLIND-OFF OPENING
2. PROVIDE NEW DUCT WORK AND ROOF CAP FOR OUTSIDE AIR SUPPLY TO UNIT
3. SEE EXISTING DRAWING NO. M-2 FOR EXISTING A.C. UNIT DETAIL.

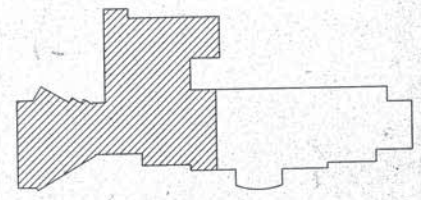

KEY PLAN

NOT TO SCALE

THE MARSHALL GROUP LTD., ARCHITECTS
590 HERNDON PARKWAY • SUITE 130 • HERNDON • VIRGINIA 22070
(703) 478-9500

JOHN J. CHRISTIE & ASSOCIATES, P.C.
CONSULTING ENGINEERS
5028, WISCONSIN AVENUE, N.W. SUITE 200
WASHINGTON, D. C. 20016

REVISIONS

No.	DESCRIPTION	DATE	BY

DELAWARE STATE COLLEGE
SCIENCE CENTER ANNEX
DOVER, DELAWARE

PARTIAL FIRST FLOOR PLAN
HVAC

DATE: 10/22/93
DESIGN: KS
DRAWN: SA/DM
CHECK: AN
JOB NO.: 9103.03

SHEET No.
M101

SHEET: OF

FILE NAME: DS-M101
DATE PLOTTED:

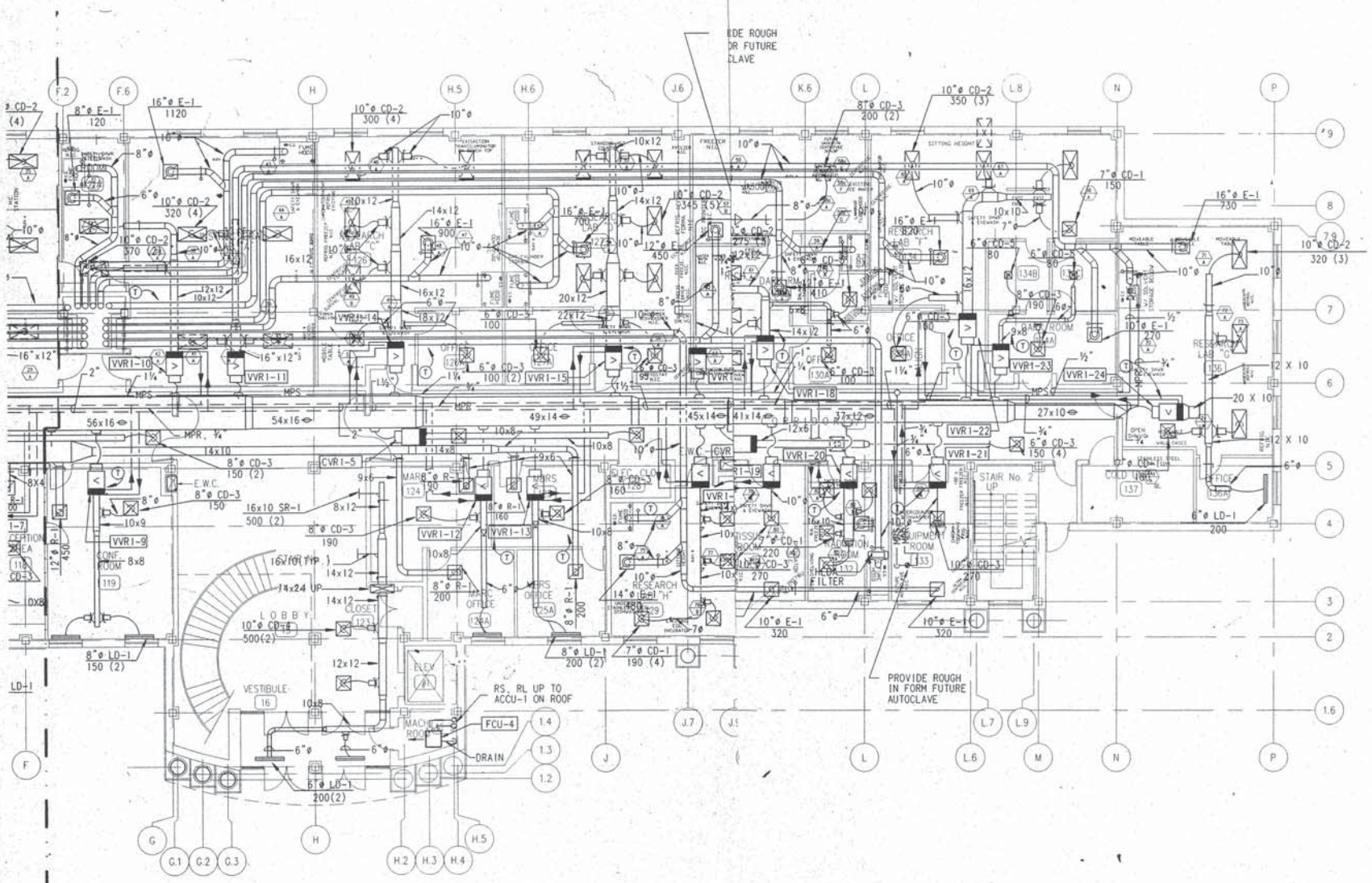

FIRST FLOOR PLA

SCALE: 1/8" = 1'-0"

KEY PLAN

NOT TO SCALE

THE MARSHALL GROUP LTD., ARCHITECTS
590 HERNDON PARKWAY • SUITE 130 • HERNDON • VIRGINIA 22070
(703) 478-9500

JOHN J. CHRISTIE & ASSOCIATES, P.C.
CONSULTING ENGINEERS
5028 WISCONSIN AVENUE, N.W. SUITE 200
WASHINGTON, D. C. 20016

REVISIONS

No.	DESCRIPTION	DATE	BY

DELAWARE STATE COLLEGE
SCIENCE CENTER ANNEX
DOVER, DELAWARE

PARTIAL FIRST FLOOR PLAN
HVAC

DATE: 10/22/93
DESIGN: KS
DRAWN: SA/DM
CHECK: AN
JOB NO.: 9103.03

SHEET No.
M102

SHEET: OF

FILE NAME: DS-M102
DATE PLOTTED:

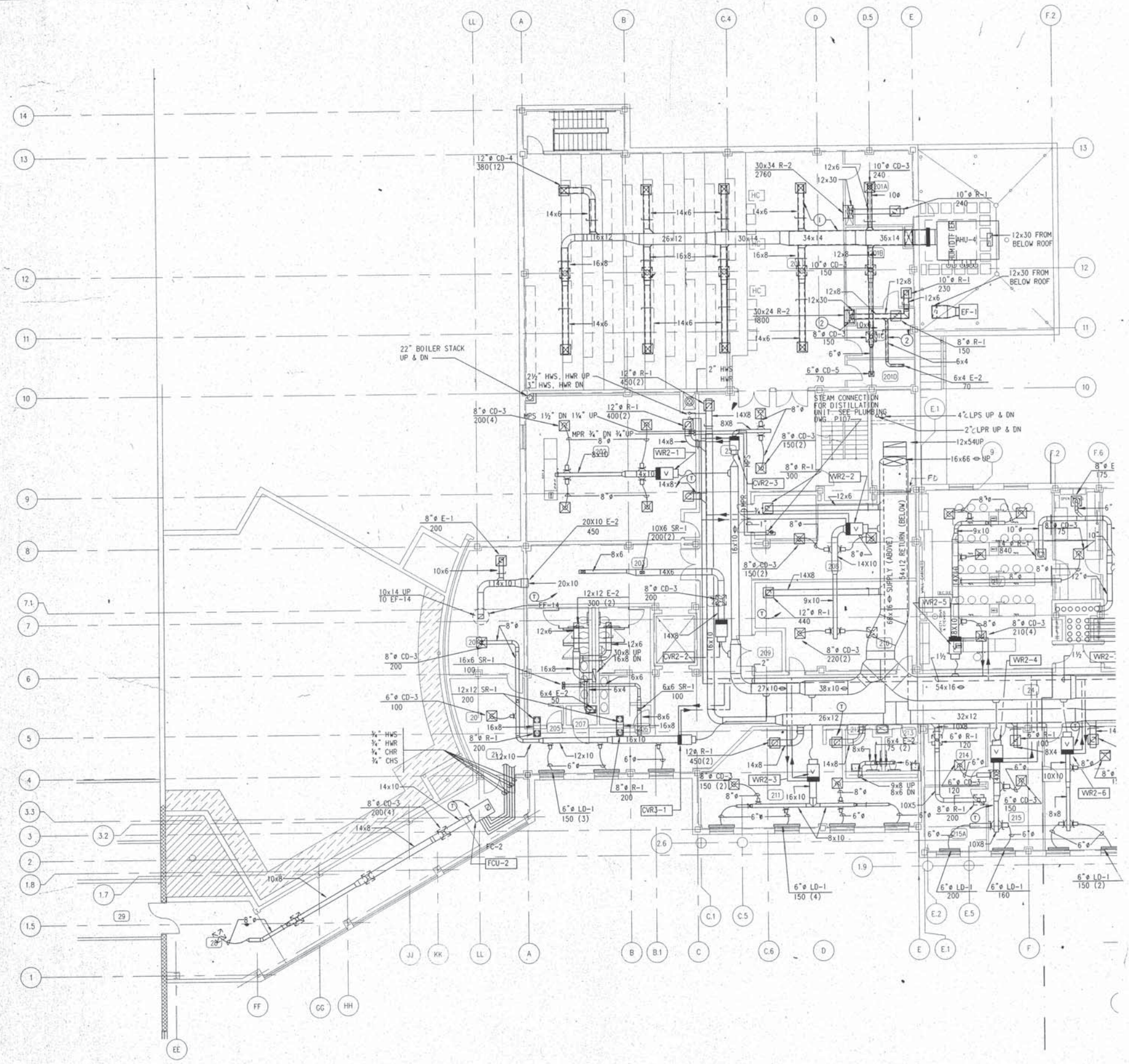

NOTES:

1. PROVIDE 1" ACOUSTICAL LINING AT MAIN DUCT AND ALL SUPPLY DUCT TAKE-OFFS AS INDICATED.
2. PROVIDE 1" ACOUSTICAL LINING ON ALL RETURN AND EXHAUST AIR DUCTS AS INDICATED.

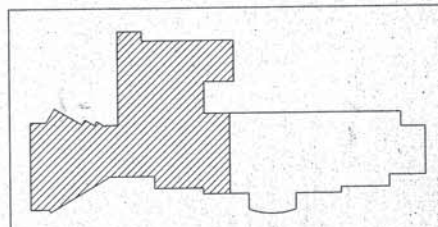

KEY PLAN

NOT TO SCALE

THE MARSHALL GROUP LTD., ARCHITECTS
590 HERNDON PARKWAY • SUITE 130 • HERNDON • VIRGINIA 22070
(703) 478-9500

JOHN J. CHRISTIE & ASSOCIATES, P.C.
CONSULTING ENGINEERS
5028 WISCONSIN AVENUE, N.W. SUITE 200
WASHINGTON, D. C. 20016

REVISIONS

No.	DESCRIPTION	DATE	BY

DELAWARE STATE COLLEGE
SCIENCE CENTER ANNEX
DOVER, DELAWARE

PARTIAL SECOND FLOOR PLAN
HVAC

DATE: 10/22/93
DESIGN: KS
DRAWN: SA/DM
CHECK: AN
JOB NO.: 9103.03

SHEET No. M103

SHEET: OF:

FILE NAME: DS-M103
DATE PLOTTED:

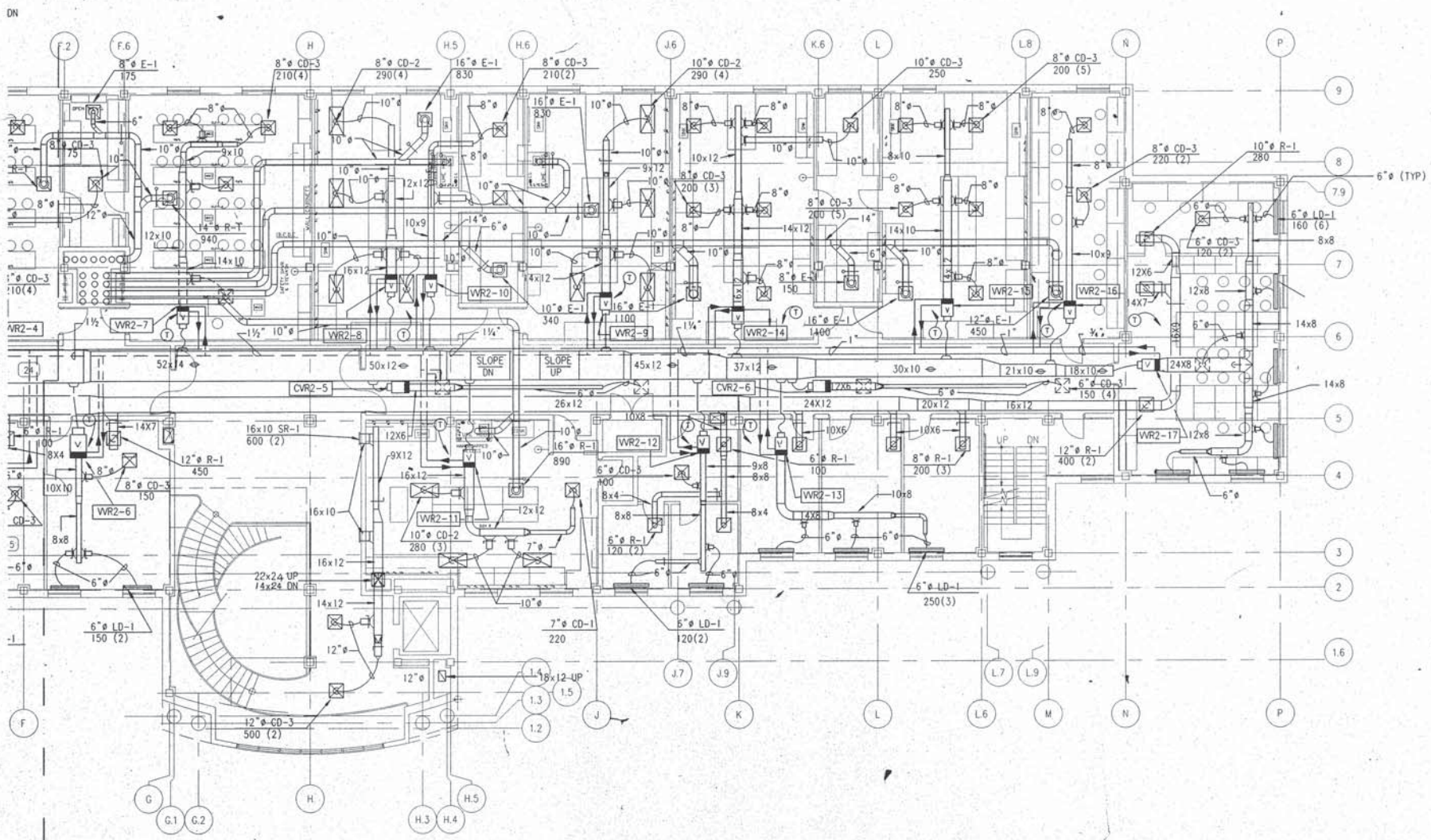

PARTIAL SECOND FLOOR PLAN

SCALE: 1/8" = 1'-0"

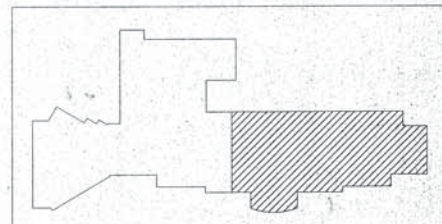

KEY PLAN

NOT TO SCALE

THE MARSHALL GROUP LTD., ARCHITECTS
590 HERNDON PARKWAY • SUITE 130 • HERNDON • VIRGINIA 22070
(703) 478-9500

JOHN J. CHRISTIE & ASSOCIATES, P.C.
CONSULTING ENGINEERS
5028 WISCONSIN AVENUE, N.W. SUITE 200
WASHINGTON, D. C. 20016

REVISIONS

No.	DESCRIPTION	DATE	BY

DELAWARE STATE COLLEGE
SCIENCE CENTER ANNEX
DOVER, DELAWARE

PARTIAL SECOND FLOOR PLAN
HVAC

DATE: 10/22/93
DESIGN: KS
DRAWN: SA/DM
CHECK: AN
JOB NO.: 9103.03

SHEET No.
M104

SHEET: OF:

FILE NAME: DS-M104
DATE PLOTTED:

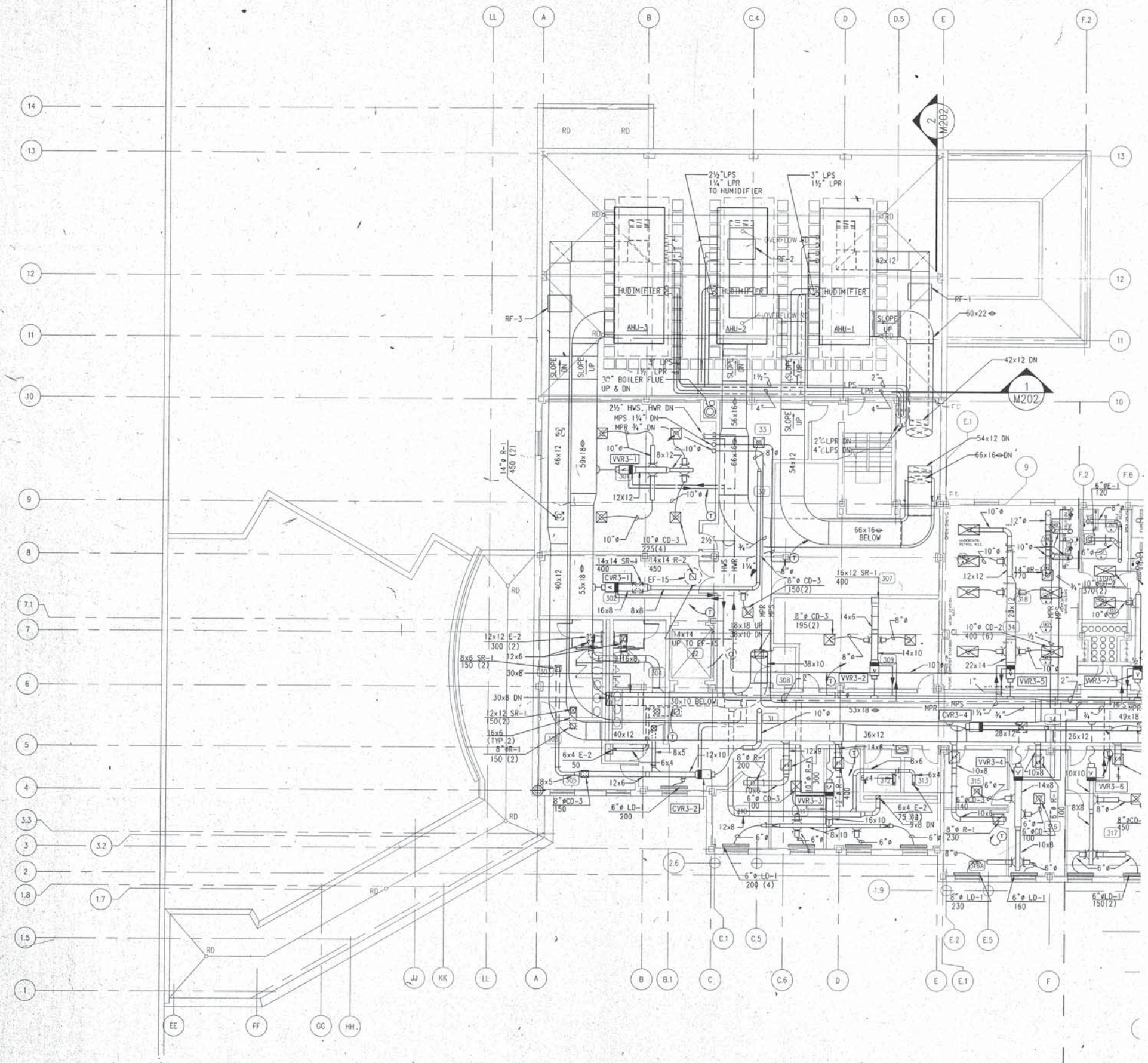

PARTIAL THIRD FLOOR PLAN

SCALE: 1/8" = 1'-0"

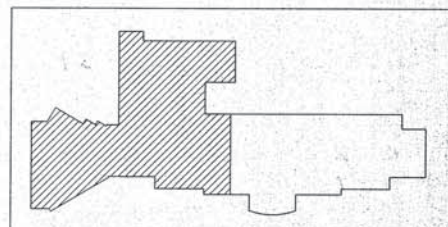

KEY PLAN

NOT TO SCALE

THE MARSHALL GROUP LTD., ARCHITECTS
590 HERNDON PARKWAY • SUITE 130 • HERNDON • VIRGINIA 22070
(703) 478-9500

JOHN J. CHRISTIE & ASSOCIATES, P.C.
CONSULTING ENGINEERS
5028 WISCONSIN AVENUE, N.W. SUITE 200
WASHINGTON, D. C. 20016

REVISIONS

No.	DESCRIPTION	DATE	BY

DELAWARE STATE COLLEGE
SCIENCE CENTER ANNEX
DOVER, DELAWARE

PARTIAL THIRD FLOOR PLAN
HVAC

DATE: 10/22/93
DESIGN: KS
DRAWN: SA/DM
CHECK: AN
JOB NO.: 9103.03

SHEET No. M105

SHEET: OF:

FILE NAME: DS-M105
DATE PLOTTED:

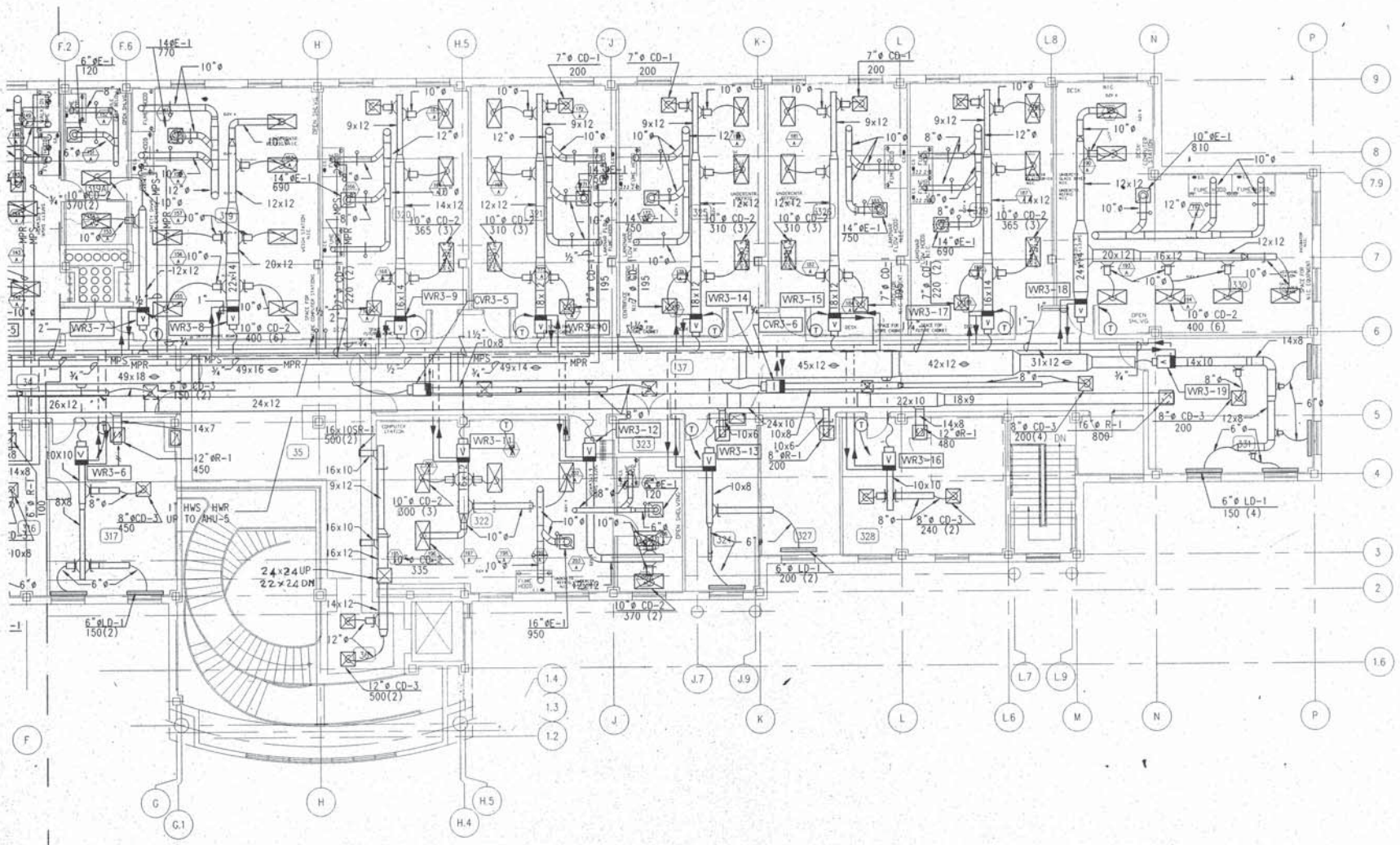

PARTIAL THIRD FLOOR PLAN

SCALE: 1/8" = 1'-0"

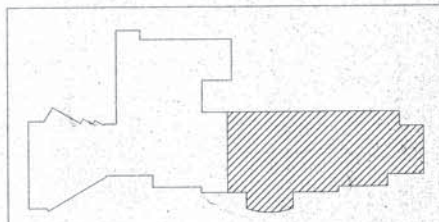

KEY PLAN

NOT TO SCALE

THE MARSHALL GROUP LTD., ARCHITECTS
590 HERNDON PARKWAY • SUITE 130 • HERNDON • VIRGINIA 22070
(703) 478-9500

JOHN J. CHRISTIE & ASSOCIATES, P.C.
CONSULTING ENGINEERS
5028 WISCONSIN AVENUE, N.W. SUITE 200
WASHINGTON, D. C. 20016

REVISIONS

No.	DESCRIPTION	DATE	BY

DELAWARE STATE COLLEGE
SCIENCE CENTER ANNEX
DOVER, DELAWARE

PARTIAL THIRD FLOOR PLAN
HVAC

DATE: 10/22/93
DESIGN: KS
DRAWN: SA/DM
CHECK: AN
JOB NO.: 9103.03

SHEET No.
M106

SHEET: OF:

FILE NAME: DS-M106
DATE PLOTTED:

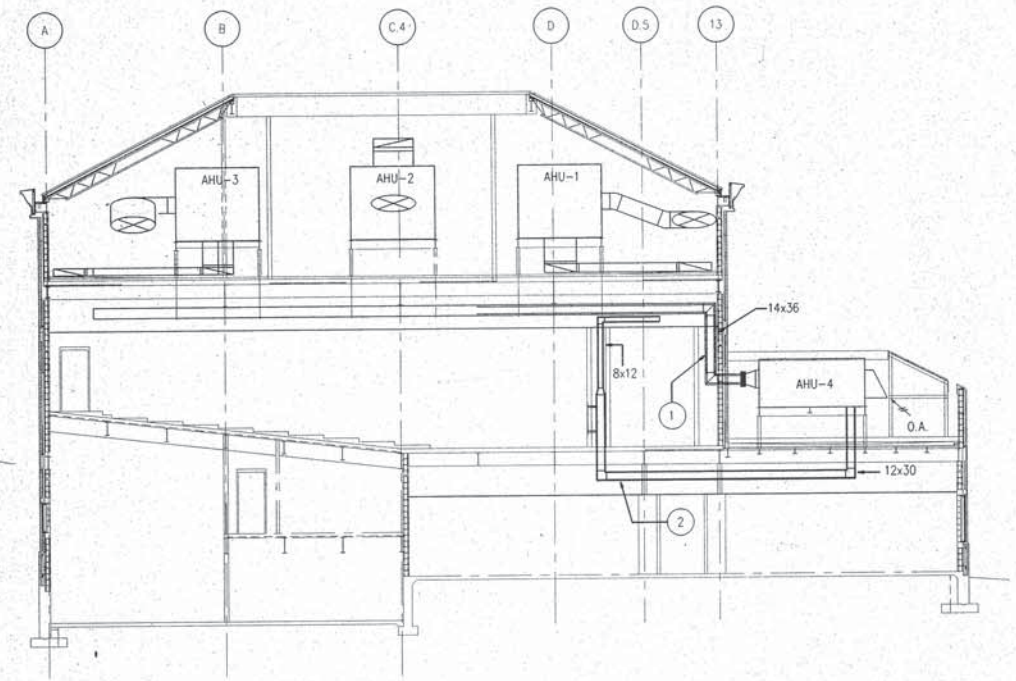

1 M105 SECTION AT HVAC EQUIPMENT ROOM
SCALE 1/8" = 1'-0"

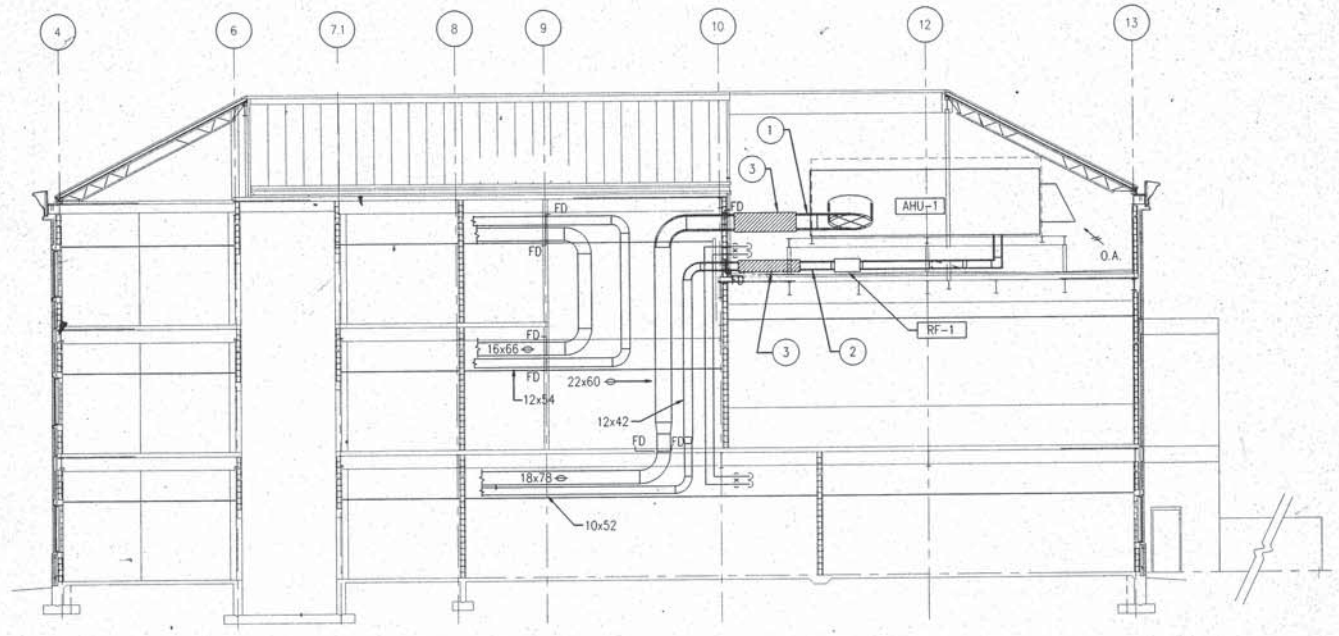

2 M105 SECTION AT HVAC EQUIPMENT ROOM
SCALE 1/8" = 1'-0"

NOTES:

1. PROVIDE 1" THICK ACOUSTICAL LINING ON SUPPLY DUCT AS INDICATED. (TYPICAL FOR AHU NOS. 1,2,3,4)
2. PROVIDE 1" THICK ACOUSTICAL LINING ON RETURN DUCT AS INDICATED. (TYPICAL FOR AHU NOS. 1,2,3,4)
3. PROVIDE 7'-0" LONG, LOW FREQUENCY SOUND TRAPS ON SUPPLY AND RETURN DUCT AS INDICATED. (TYPICAL FOR AHU NOS. 1,2,3).

THE MARSHALL GROUP LTD., ARCHITECTS
590 HERNDON PARKWAY • SUITE 130 • HERNDON • VIRGINIA 22070
(703) 478-9500

JOHN J. CHRISTIE & ASSOCIATES, P.C.
CONSULTING ENGINEERS
5028 WISCONSIN AVENUE, N.W. SUITE 200
WASHINGTON, D. C. 20016

REVISIONS

No.	DESCRIPTION	DATE	BY

DELAWARE STATE COLLEGE
SCIENCE CENTER ANNEX
DOVER, DELAWARE

EQUIPMENT ROOM SECTION
HVAC

REGISTERED PROFESSIONAL ENGINEER
No. 9161
DELAWARE

DATE: 10/22/93
DESIGN: KS
DRAWN: SA/DM
CHECK: AN
JOB NO.: 9103.03

SHEET No. M202

SHEET: OF:

FILE NAME: DS-M202
DATE PLOTTED:

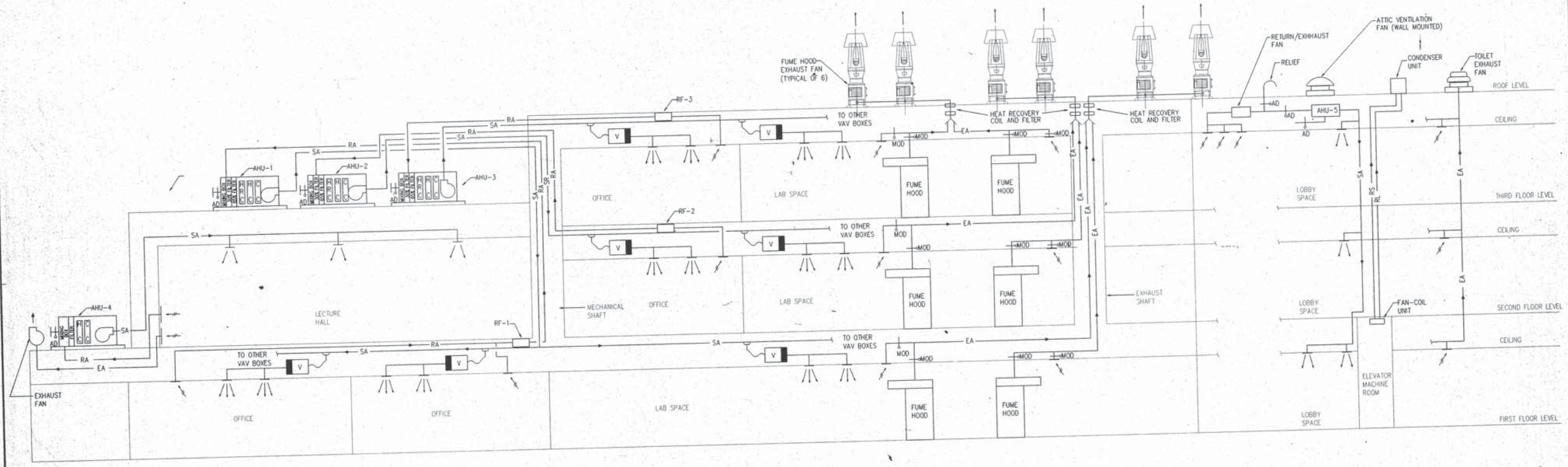

AIR FLOW SCHEMATIC

NO SCALE

THE MARSHALL GROUP LTD., ARCHITECTS
590 HERNDON PARKWAY ◆ SUITE 130 ◆ HERNDON ◆ VIRGINIA 22070
(703) 478-9500

JOHN J. CHRISTIE & ASSOCIATES, P.C.
CONSULTING ENGINEERS
5028 WISCONSIN AVENUE, N.W. SUITE 200
WASHINGTON, D. C. 20016

REVISIONS

No.	DESCRIPTION	DATE	BY

DELAWARE STATE COLLEGE
SCIENCE CENTER ANNEX
DOVER, DELAWARE

AIR FLOW SCHEMATIC
HVAC

DATE: 10/22/93
DESIGN: KS
DRAWN: SA/DM
CHECK: AN
JOB NO.: 9103.03

SHEET No.
M301

SHEET: OF:

FILE NAME: DS-M301
DATE PLOTTED:

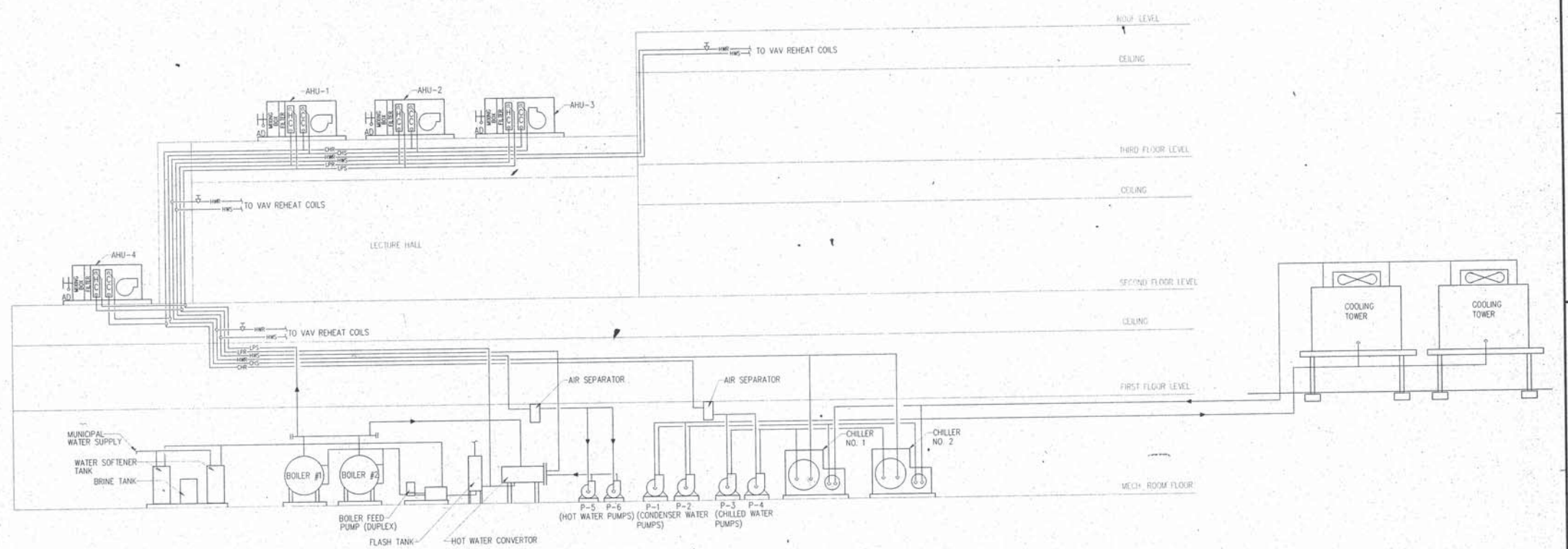

STEAM AND WATER FLOW DIAGRAM

NO SCALE

THE MARSHALL GROUP LTD., ARCHITECTS
590 HERNDON PARKWAY • SUITE 130 • HERNDON • VIRGINIA 22070
(703) 478-9500

JOHN J. CHRISTIE & ASSOCIATES, P.C.
CONSULTING ENGINEERS
5028 WISCONSIN AVENUE, N.W. SUITE 200
WASHINGTON, D. C. 20016

REVISIONS

No.	DESCRIPTION	DATE	BY

DELAWARE STATE COLLEGE
SCIENCE CENTER ANNEX
DOVER, DELAWARE

STEAM AND WATER FLOW DIAGRAM
HVAC

DATE: 10/22/93
DESIGN: KS
DRAWN: SA/DM
CHECK: AN
JOB NO.: 9103.03

SHEET No. M302
SHEET: OF

FILE NAME: DS-M302
DATE PLOTTED:

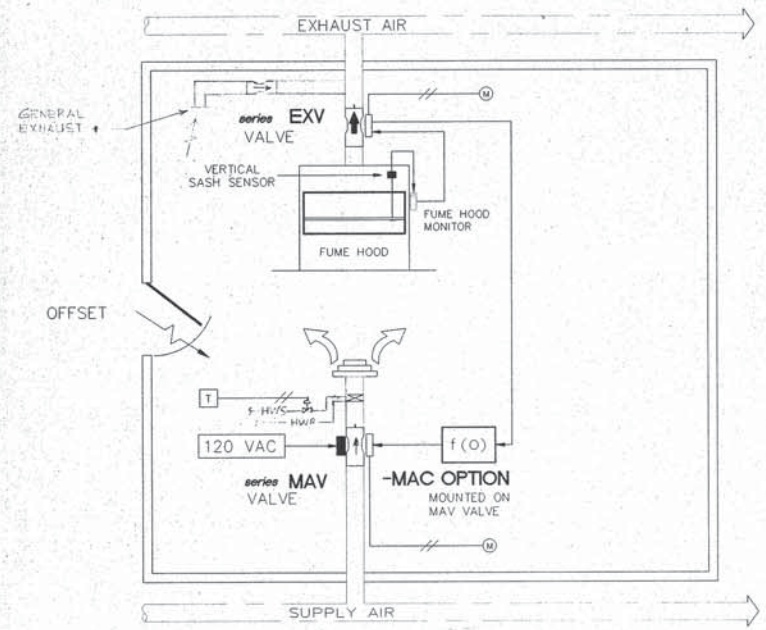

BASE LABORATORY CONTROL SCHEMATIC

NOT TO SCALE

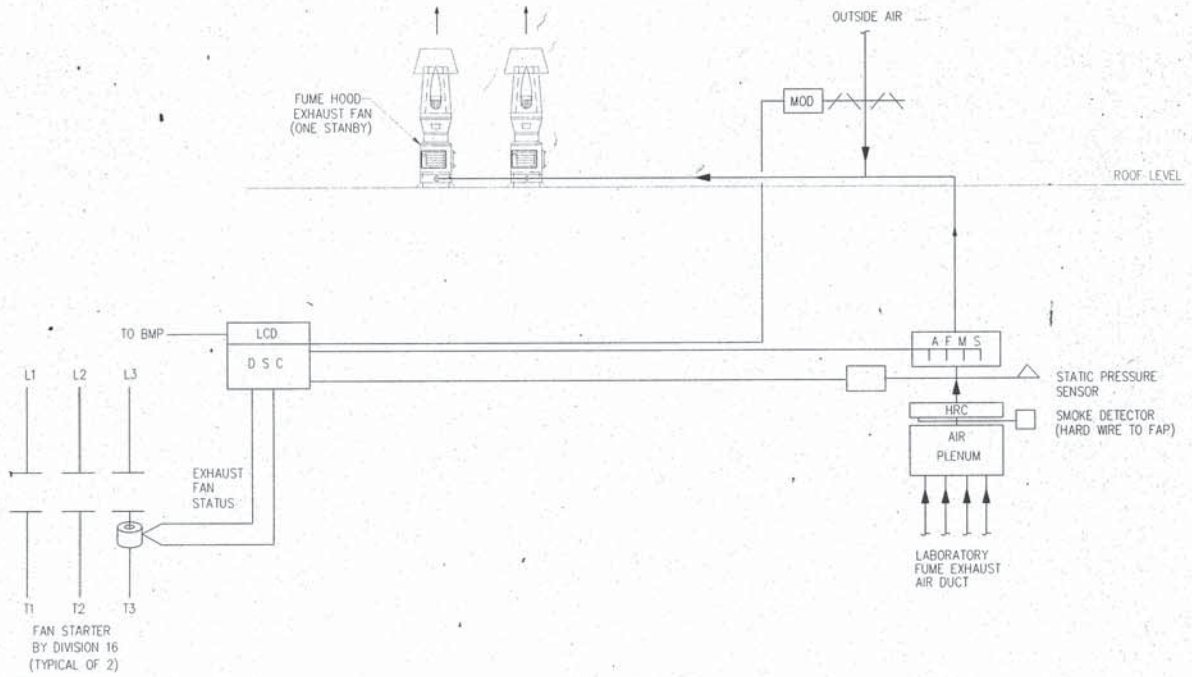

LABORATORY FUME HOOD EXHAUST FAN CONTROL
TYPICAL FOR EF-3 TRU EF-8

NOT TO SCALE

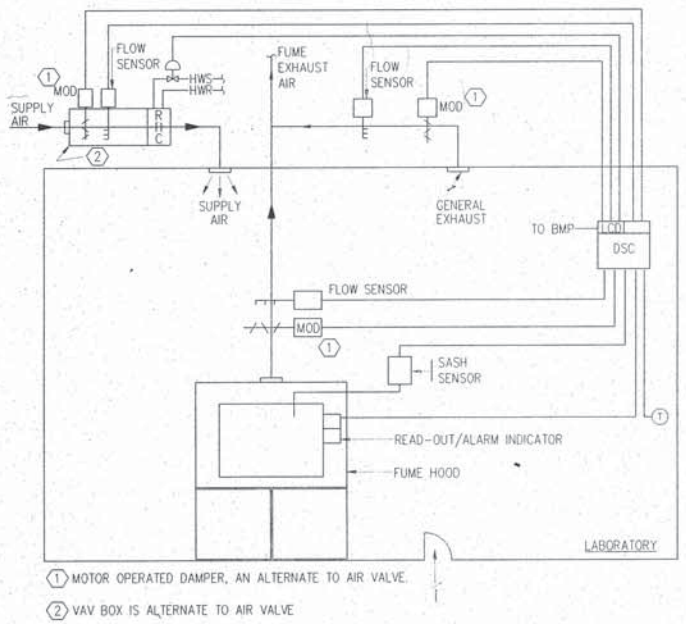

LABORATORY VAV CONTROL SYSTEM (TYPICAL)

NOT TO SCALE

ALTERNATE

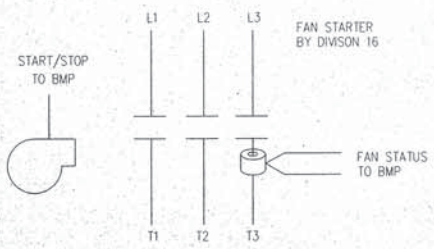

TYPICAL EXHAUST FAN CONTROL

NOT TO SCALE

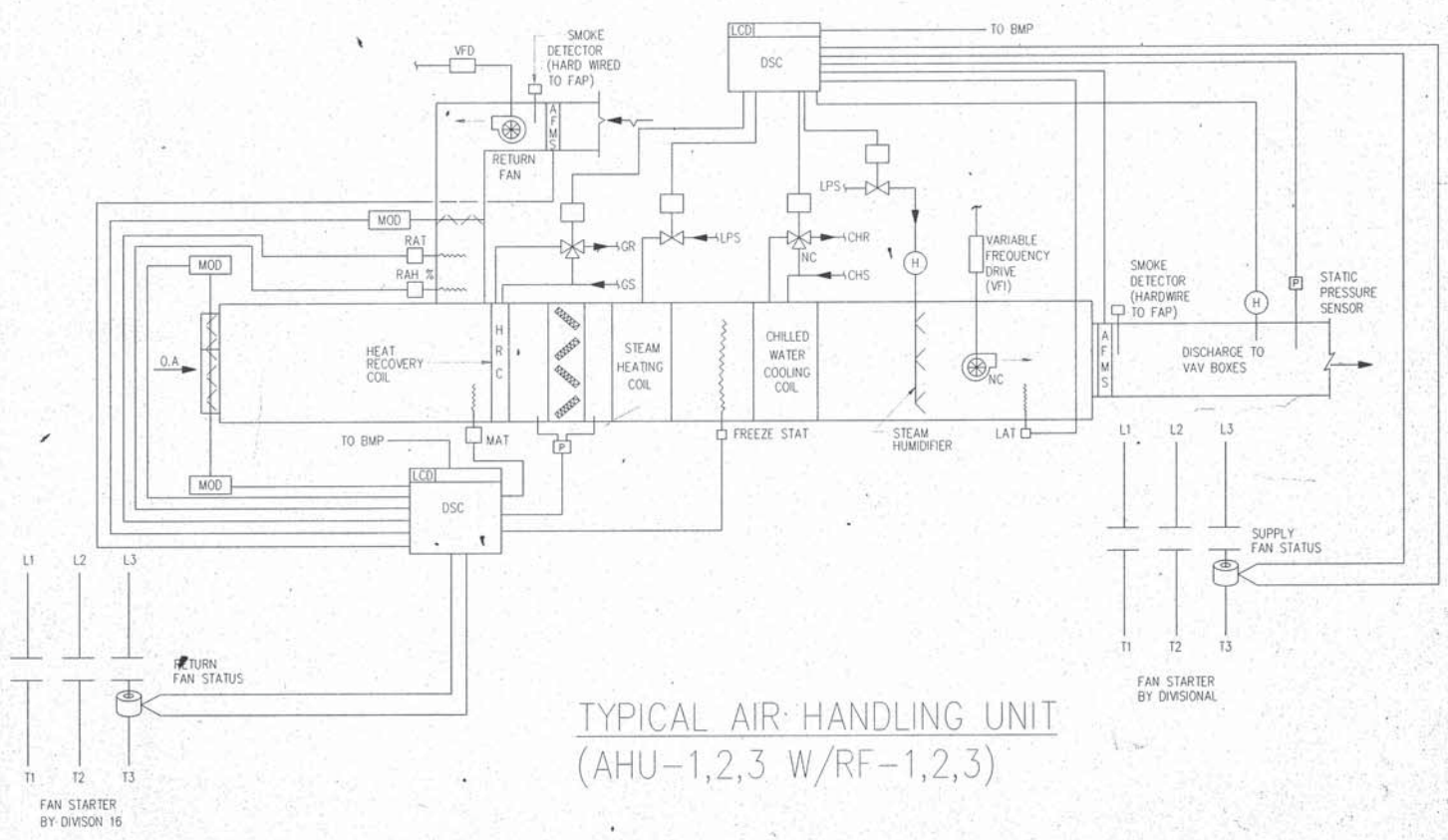

TYPICAL AIR HANDLING UNIT
(AHU-1,2,3 W/RF-1,2,3)

SCHEMATIC CONTROL DIAGRAM

NOT TO SCALE

THE MARSHALL GROUP LTD., ARCHITECTS
590 HERNDON PARKWAY ◆ SUITE 130 ◆ HERNDON ◆ VIRGINIA 22070
(703) 478-9500

JOHN J. CHRISTIE & ASSOCIATES, P.C.
CONSULTING ENGINEERS
5028 WISCONSIN AVENUE, N.W. SUITE 200
WASHINGTON, D. C. 20016

REVISIONS

No.	DESCRIPTION	DATE	BY

DELAWARE STATE COLLEGE
SCIENCE CENTER ANNEX
DOVER, DELAWARE

SCHEMATIC CONTROL DIAGRAMS
HVAC

DATE: 10/22/93
DESIGN: KS
DRAWN: SA/DM
CHECK: AN
JOB NO.: 9103.03

SHEET No. M303

SHEET: OF

FILE NAME: DS-M304
DATE PLOTTED:

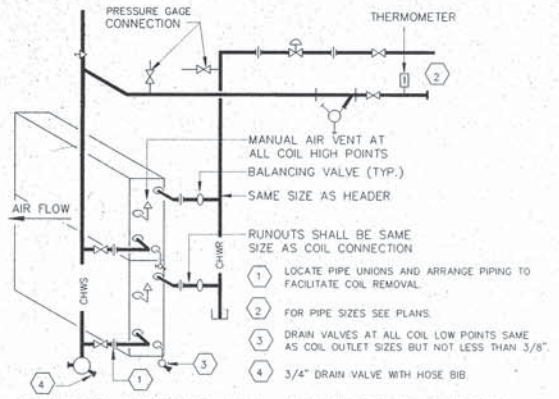

A CHILLED WATAER COIL CONNECTION DETAIL
NO SCALE

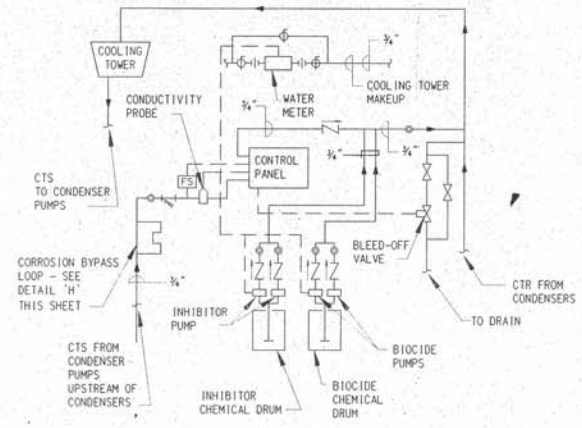

B COOLING TOWER CHEMICAL TREATMENT
NO SCALE

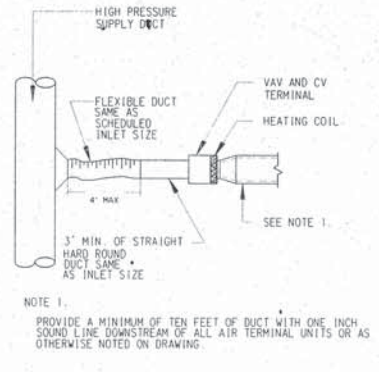

C AIR TERMINAL UNIT
NO SCALE

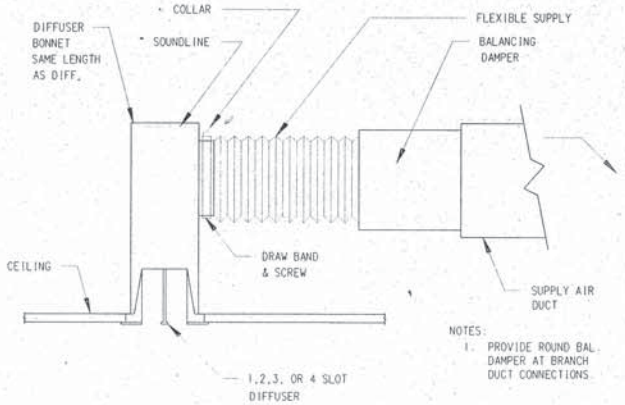

D TYPICAL LINEAR DIFFUSER BONNET
NO SCALE

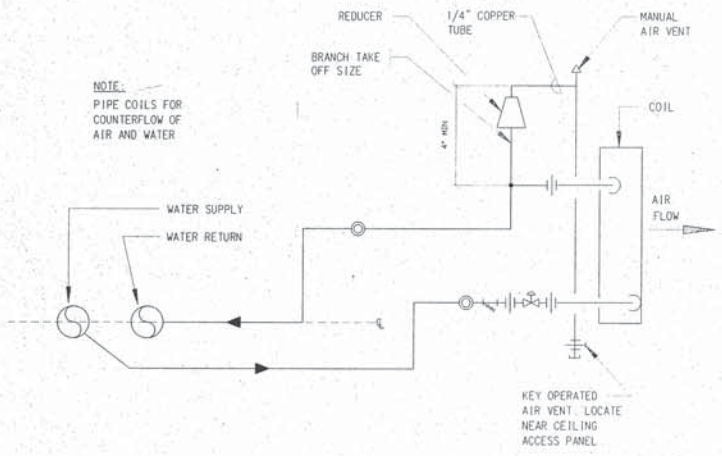

E HOT WATER REHEAT COIL CONNECTIONS
NO SCALE

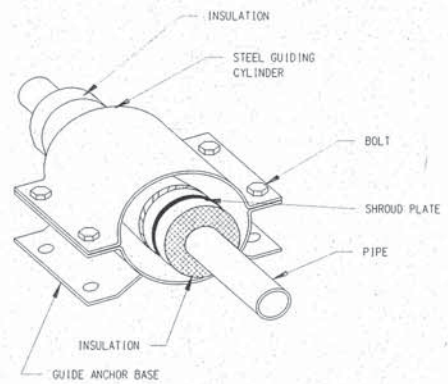

F TYPICAL PIPE GUIDE FOR INSULATED PIPE
NO SCALE

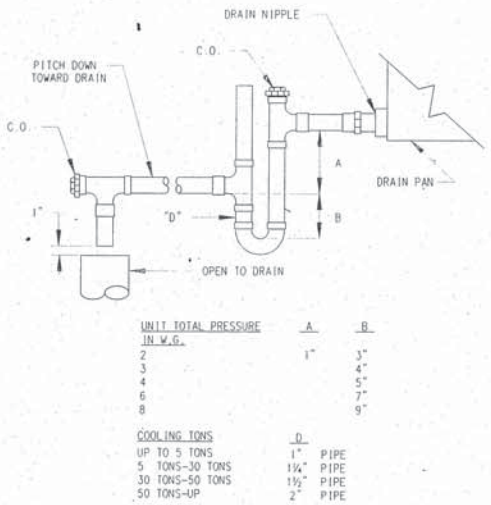

G AIR HANDLING UNIT DRAIN TRAP
NO SCALE

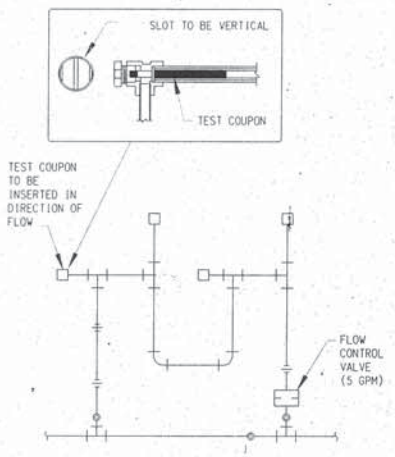

H CORROSION BYPASS LOOP
NO SCALE

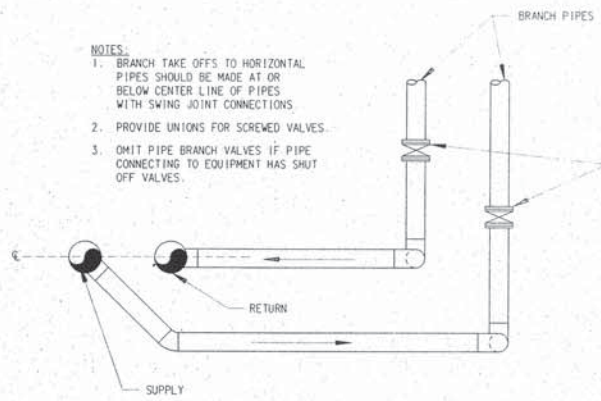

J TYPICAL BRANCH TAKE-OFF / RHS & RHR CHWS & CHWR / HWS & HWR
NO SCALE

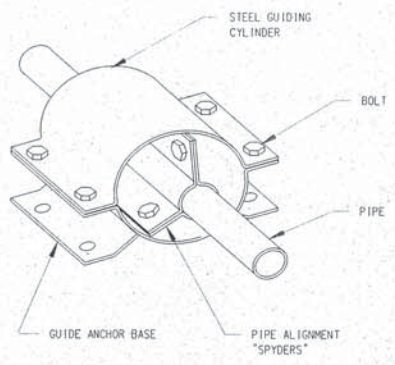

K TYPICAL PIPE GUIDE DETAIL
NO SCALE

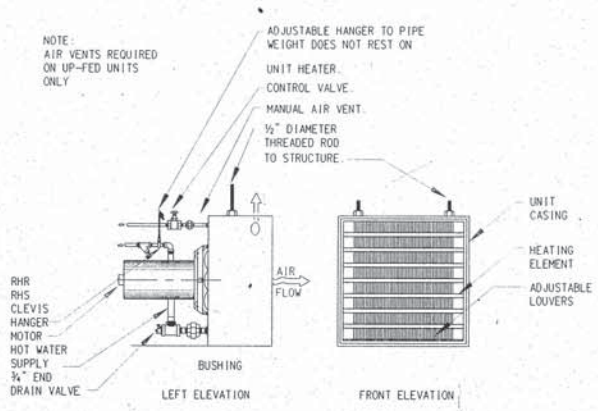

L HORIZONTAL HOT WATER – UNIT HEATER CONNECTION
NO SCALE

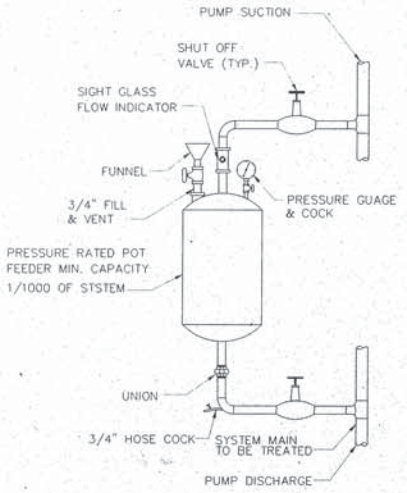

M CHEMICAL POT FEEDER DETAIL
NO SCALE

THE MARSHALL GROUP LTD., ARCHITECTS
590 HERNDON PARKWAY • SUITE 130 • HERNDON • VIRGINIA 22070
(703) 478-9500

JOHN J. CHRISTIE & ASSOCIATES, P.C.
CONSULTING ENGINEERS
5028 WISCONSIN AVENUE, N.W. SUITE 200
WASHINGTON, D. C. 20016

REVISIONS

No.	DESCRIPTION	DATE	BY.

DELAWARE STATE COLLEGE
SCIENCE CENTER ANNEX
DOVER, DELAWARE

TYPICAL DETAILS

DATE: 10/22/93
DESIGN: KS
DRAWN: SA/DM
CHECK: AN
JOB NO.: 9103.03

SHEET No. M402

SHEET: OF:

FILE NAME: DS-M401
DATE PLOTTED: