DOT1711-SIGN_POST

Galvanized Telescoping Steel Sign Post

Sample Drawing
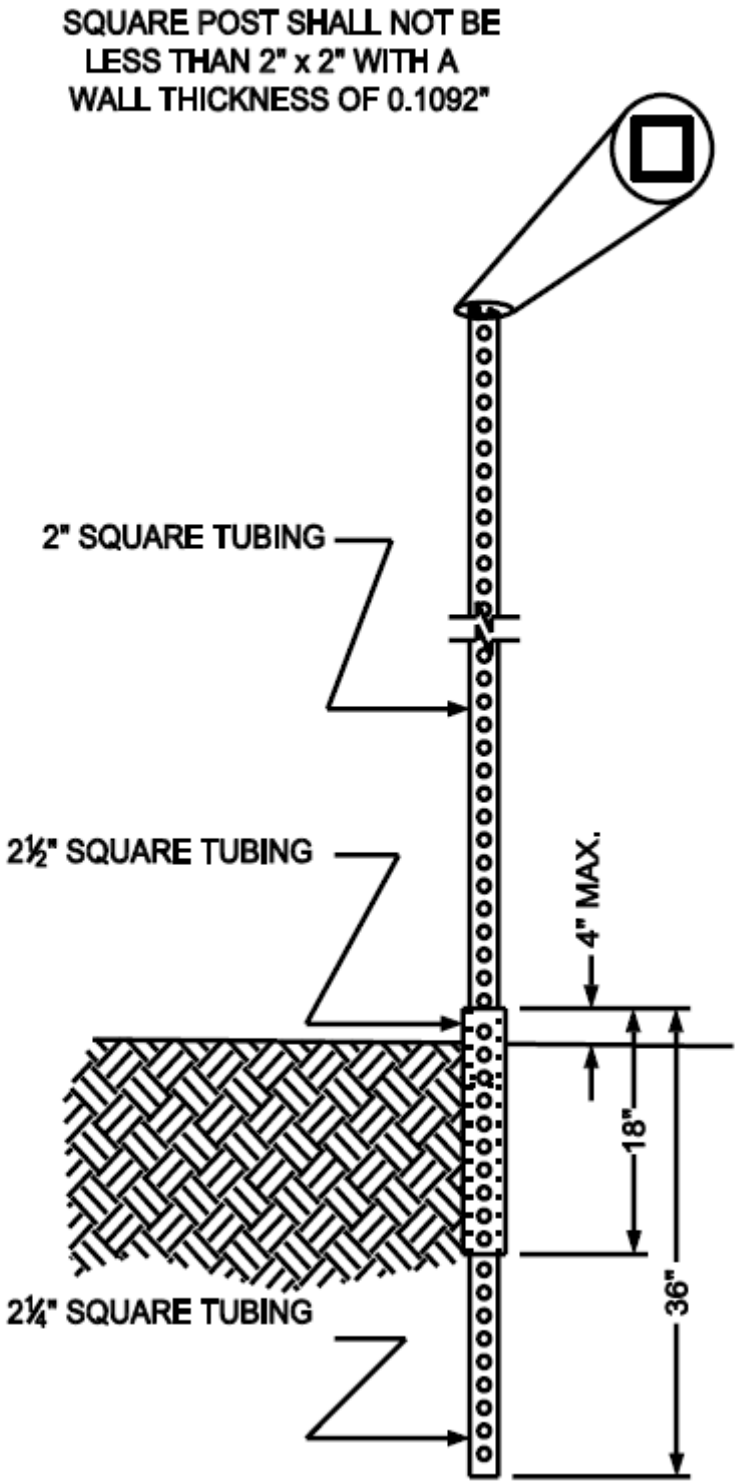
BREAK-AWAY ASSEMBLY