LEGEND:

EXISTING		EXISTING			PROPOSED
119x5	SPOT GRADE	UP	UTILITY POLE	UTILITY TO BE REMOVED	
279	CONTOUR	ELEC. MH.	ELECTRIC MANHOLE	TO BE REMOVED	
	BUILDING	TEL. MH.	TELEPHONE MANHOLE		
	CONCRETE	GAS MH	GAS MANHOLE	STABILIZED CONSTRUCTION ENTRANCE	(SCE)
	BRICK SIDEWALK	FH	FIRE HYDRANT	LIMIT OF DISTURBANCE	(LOD)
	PAVEMENT	WV	WATER VALVE		
	CURB	GV	GAS VALVE		
UE	UNDERGROUND ELECTRIC	CO	CLEANOUT		
6"W	WATER LINE		SIGN		
4"G	GAS LINE	LP	LIGHT POLE		
12"TC	COMBINED SEWER LINE		SITE BENCHMARK		
12"RCP	STORM LINE	MON.	MONUMENT		
COMB. MH.	COMBINED SEWER MANHOLE		FENCE		
STMH.	STORM MANHOLE	16"	DECIDUOUS TREE/SIZE		
CB	CATCH BASIN	10"	EVERGREEN TREE/SIZE		

DEMOLITION NOTES:

1. REFER TO CONTRACT GENERAL CONDITIONS FOR REQUIRED SITE SAFETY AND SECURITY.
2. REFER TO SHEETS CS-101 TO CS-106 FOR EROSION CONTROL REQUIREMENTS.
3. ALL ITEMS THAT ARE CLEARED AND DEMOLISHED AND HAULED OFF SITE SHALL BE LAWFULLY DISPOSED. REFER TO PROJECT SPECIFICATIONS.

1. OWNER: BRANDYWINE SCHOOL DISTRICT, 1311 BRANDYWINE BLVD., WILMINGTON, DE 19807, (302) 529-3110
2. ADDRESS: 701 W. THIRTY FOURTH STREET, WILMINGTON, DE 19802
3. TAX PARCEL NUMBER: 26-009.10-001
4. AREA: 21.26± ACRES
5. ZONING: R-2
6. VERTICAL DATUM: NATIONAL GEODETIC VERTICAL DATUM 1929 (N.G.V.D. 29)
7. HORIZONTAL DATUM: DELAWARE STATE PLANE, N.A.D. 83
8. SOURCE OF TOPOGRAPHY: FIELD SURVEY BY VANDEMARK & LYNCH, INC. DATED MARCH 1999, APRIL 2006, AND OCTOBER 2016.
9. SITE BENCHMARK: TOP OF CONCRETE MONUMENT ALONG FRANKLIN PLACE. ELEVATION=129.49
10. THIS PLAN DOES NOT REPRESENT A PROPERTY SURVEY BY VANDEMARK & LYNCH, INC.

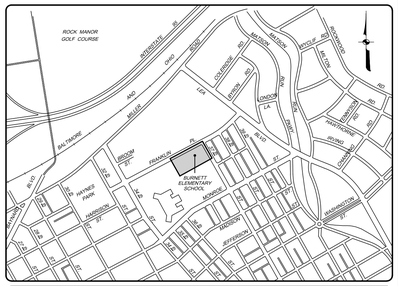

LOCATION PLAN SCALE: 1" = 800'

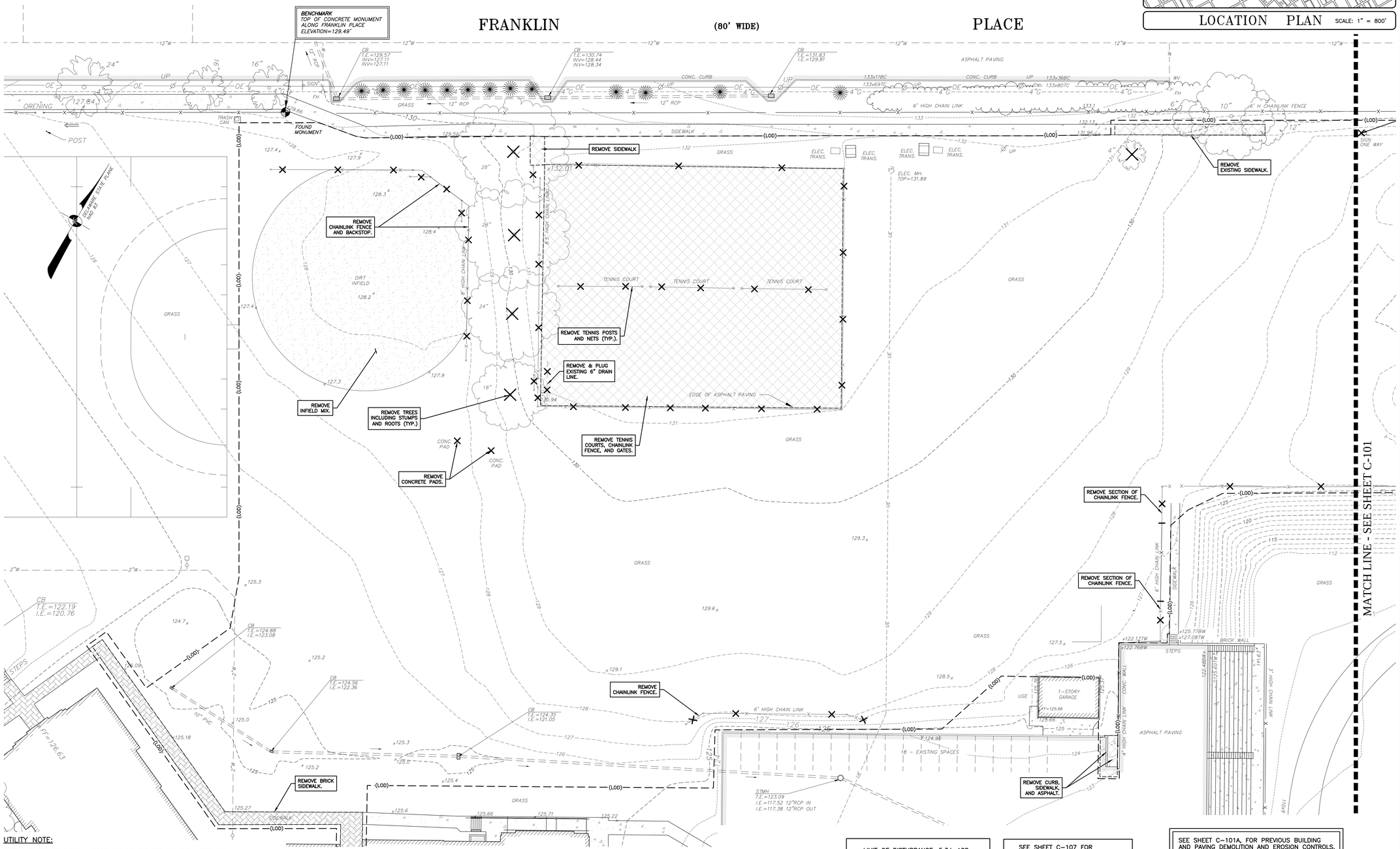

UTILITY NOTE:

EXISTING UTILITIES ARE SHOWN IN ACCORDANCE WITH THE BEST AVAILABLE INFORMATION. COMPLETENESS OR CORRECTNESS THEREOF IS NOT GUARANTEED. IT SHALL BE THE CONTRACTORS' RESPONSIBILITY TO CONTACT THE UTILITY COMPANIES INVOLVED IN ORDER TO SECURE THE MOST ACCURATE INFORMATION AVAILABLE AS TO UTILITY LOCATION AND ELEVATION. NO CONSTRUCTION AROUND OR ADJACENT TO UTILITIES SHALL BEGIN WITHOUT NOTIFYING THEIR OWNERS AT LEAST 48 HOURS IN ADVANCE. THE CONTRACTOR SHALL TAKE THE NECESSARY PRECAUTIONS TO PROTECT THE EXISTING UTILITIES AND MAINTAIN UNINTERRUPTED SERVICE AND ANY DAMAGE DONE TO THEM DUE TO THE CONTRACTORS' NEGLIGENCE SHALL BE IMMEDIATELY AND COMPLETELY REPAIRED AT CONTRACTORS' EXPENSE. TO LOCATE EXISTING UTILITIES IN THE FIELD PRIOR TO CONSTRUCTION, THE CONTRACTOR SHALL CONTACT MISS UTILITY OF DELMARVA (TELEPHONE 800-282-8555). THE FOLLOWING UTILITIES HAVE BEEN IDENTIFIED BY MISS UTILITY AS HAVING UNDERGROUND FACILITIES IN THE AREA OF THIS PROJECT (MISS UTILITY NO. 162730697):

DE. DEPT. OF NAT. RESOURCES & ENV.
DELMARVA POWER
DELMARVA POWER GAS
COMCAST - UTILIQUEST
NEW CASTLE DEPARTMENT OF SPECIAL SERVICES
CITY OF WILMINGTON
VERIZON

MISS UTILITY OF DELMARVA - DELAWARE 1-800-282-8555 CALL BEFORE YOU DIG!

SHEET TITLE	SHEET NO.
DEMOLITION PLAN	C-100 TO C-101
BUILDING DEMOLITION PLAN	C-101A
CONSTRUCTION LAYOUT PLAN	C-102 TO C-103
SITE CONSTRUCTION PLANS	C-104 TO C-105
RETAINING WALL AND RAMP SECTION	C-106
GENERAL DETAILS	C-107
BASEBALL AND SOFTBALL DETAILS	C-108
TENNIS COURT AND FENCE DETAILS	C-109

LIMIT OF DISTURBANCE: 5.3± ACS.

SEE SHEET C-107 FOR GENERAL CONSTRUCTION NOTES

SEE SHEET C-101A, FOR PREVIOUS BUILDING AND PAVING DEMOLITION AND EROSION CONTROLS.

REFER TO SHEET CS-102 FOR EROSION CONTROL MEASURES THAT MUST BE IN PLACE PRIOR TO SITE DEMOLITION.

20 0 10 20 40 80
GRAPHIC SCALE (FEET)

ABHA architects
1621 N. Lincoln Street
Wilmington, DE 19806
(P)302-658-6426
(F)302-658-8431
abhagen@ABHA.com
www.ABHA.com

CONSULTANTS
Vandemark & Lynch, Inc.
Civil Engineers
4305 Miller Road
Wilmington, DE 19899

PROJECT
MARGUERITE H. BURNETT MIDDLE SCHOOL DEMOLITION PROJECT

701 West 34th Street
Wilmington, Delaware 19802

OWNER
Brandywine School District
1000 Pennsylvania Avenue
Claymont, DE 19703

MARK	DATE	DESCRIPTION

PROJECT NO:	24369.00
FILE NAME	V&L NO. 24369.00-DEMO-01
DRAWN BY:	D. SHEEKY
CHECKED BY:	S. ROSENFELD

The professional services of ABHA Architects, Inc. are undertaken for and performed in the interest of _____ No contractual obligation is assumed by ABHA Architects, Inc. for the benefit of any other person involved in the project. These documents are owned by ABHA Architects, Inc. and shall not be used without written permission. Copyright ABHA Architects, Inc. © 2006

SHEET TITLE
DEMOLITION PLAN

SCALE: 1" = 20'

C-100

24369.00-DEMO-01

P:\Land Projects\24369 Burnett Elem School\Plan Prod\SC Plan\24369.00-DEMO-01.dwg, 11/29/2017 1:13:01 PM, David J. Sheeky, VanDemark & Lynch, Inc.

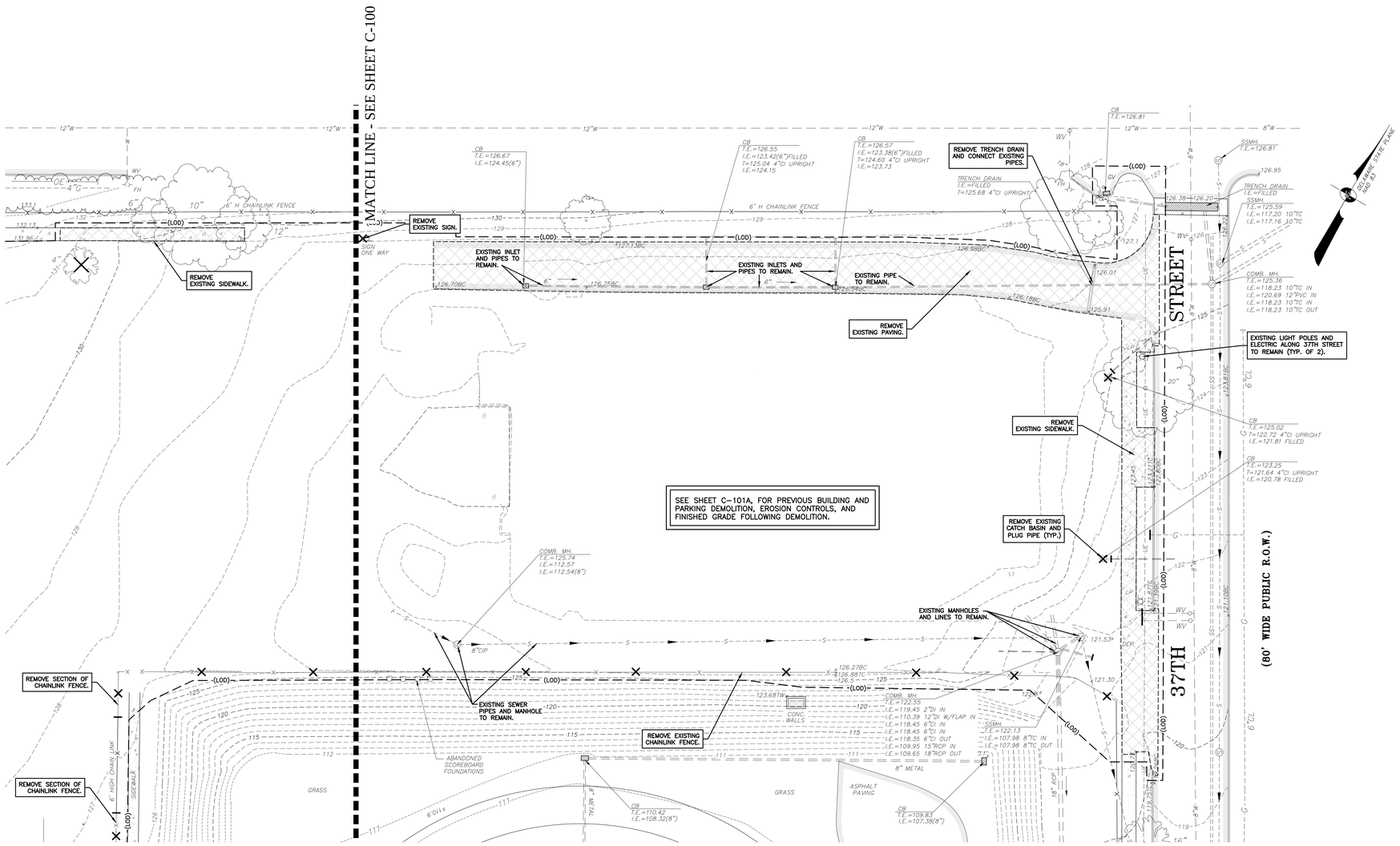

LEGEND:

119x5	SPOT GRADE
279	CONTOUR
	BUILDING
	CONCRETE
	BRICK SIDEWALK
	PAVEMENT
	CURB
UE	UNDERGROUND ELECTRIC
6"W	WATER LINE
4"G	GAS LINE
12"TC	COMBINED SEWER LINE
12"RCP	STORM LINE
COMB. MH.	COMBINED SEWER MANHOLE
STMH.	STORM MANHOLE
CB	CATCH BASIN
N/A	FLOW PATH
UP	UTILITY POLE
ELEC. MH.	ELECTRIC MANHOLE
TEL. MH.	TELEPHONE MANHOLE
GAS MH	GAS MANHOLE
FH	FIRE HYDRANT
WV	WATER VALVE
GV	GAS VALVE
CO	CLEANOUT
	SIGN
LP	LIGHT POLE
	SITE BENCHMARK
MON.	MONUMENT
	FENCE
16"	DECIDUOUS TREE/SIZE
10"	EVERGREEN TREE/SIZE
	UTILITY TO BE REMOVED
	TO BE REMOVED
(SCE)	STABILIZED CONSTRUCTION ENTRANCE
(LOD)	LIMIT OF DISTURBANCE

MISS UTILITY OF DELMARVA - DELAWARE
1-800-282-8555
CALL BEFORE YOU DIG!

REFER TO SHEET CS-102 FOR EROSION CONTROL MEASURES THAT MUST BE IN PLACE PRIOR TO SITE DEMOLITION.

SEE SHEET C-107 FOR GENERAL CONSTRUCTION NOTES

20 0 10 20 40 80
GRAPHIC SCALE (FEET)

ABHA architects
1621 N. Lincoln Street
Wilmington, DE 19806
(P)302-658-6426
(F)302-658-8431
abhagen@ABHA.com
www.ABHA.com

CONSULTANTS

Vandemark & Lynch, Inc.
Civil Engineers
4305 Miller Road
Wilmington, DE 19899

PROJECT

MARGUERITE H. BURNETT MIDDLE SCHOOL DEMOLITION PROJECT

701 West 34th Street
Wilmington, Delaware 19802

OWNER

Brandywine School District

1000 Pennsylvania Avenue
Claymont, DE 19703

MARK	DATE	DESCRIPTION

PROJECT NO: 24369.00
FILE NAME: V&L NO. 24369.00-DEMO-01
DRAWN BY: D. SHEEKY
CHECKED BY: S. ROSENFELD

The professional services of ABHA Architects, Inc. are undertaken for and performed in the interest of ABHA Architects, Inc. for the benefit of any other person involved in the project. No contractual obligation is assumed by

These documents are owned by ABHA Architects, Inc. and shall not be used without written permission. Copyright ABHA Architects, Inc. © 2006

SHEET TITLE

DEMOLITION PLAN

SCALE: 1" = 20'

C-101

2 OF 10

24369.00-DEMO-01

P:\Land Projects\24369 Burnett Elem School\Plan Prod\SC Plan\24369.00-DEMO-01.dwg, 11/29/2017 2:32:33 PM, David J. Sheeky, VanDemark & Lynch, Inc.

PROJECT NOTES:

1. PARCEL DATA: TAX MAP NO: 26-009.10-001
2. DNREC SEDIMENT AND STORMWATER PROGRAM NO.:
3. ADDRESS: 701 W. THIRTY FOURTH STREET, WILMINGTON, DE, 19802
4. LATITUDE/LONGITUDE: N 39.7375 / W 75.5555 (AT SITE BENCHMARK)
5. EXISTING SITE AREA: 21.26± ACRES
6. SOURCE OF TOPOGRAPHY: FIELD SURVEY BY VANDEMARK & LYNCH, INC. MARCH 1999, APRIL 2006, AND OCTOBER 2016.
7. VERTICAL DATUM: NORTH AMERICA VERTICAL DATUM 1988 (N.A.V.D. 88)
8. HORIZONTAL DATUM: DELAWARE STATE PLANE (N.A.D. 83)
9. SITE BENCHMARK: TOP OF CONCRETE MONUMENT ALONG FRANKLIN PLACE ELEVATION 129.49
10. AS SCALED FROM THE NATIONAL FLOOD INSURANCE PROGRAM FLOOD INSURANCE RATE MAP, NUMBER 10003C0068J, WITH AND EFFECTIVE DATE OF JANUARY 17, 2007 AND 10003C0069K, WITH AN EFFECTIVE DATE OF FEBRUARY 4, 2015, THIS PROPERTY DOES NOT LIE WITHIN A 100-YEAR FLOODPLAIN.
11. PROPOSED DISCHARGE LOCATION: CITY OF WILMINGTON COMBINED SEWER
12. OWNER DATA:
    BRANDYWINE SCHOOL DISTRICT
    1311 BRANDYWINE BLVD.
    WILMINGTON, DE, 19809
    PHONE: 302-529-3110
13. LAND DEVELOPER DATA:
    BRANDYWINE SCHOOL DISTRICT
    1311 BRANDYWINE BLVD.
    WILMINGTON, DE, 19809
    PHONE: 302-529-3110
14. DESIGNER DATA:
    STEPHEN H. ROSENFELD, P.E.
    VANDEMARK & LYNCH, INC.
    4305 MILLER ROAD
    WILMINGTON, DE, 19802
    PHONE: 302-764-7635
    FAX: 302-764-4170
15. REVIEW AGENCY DATA:
    ELAINE WEBB
    DELAWARE DEPARTMENT OF NATURAL RESOURCES AND ENVIRONMENTAL CONTROL DIVISION OF WATERSHED STEWARDSHIP: SEDIMENT AND STORMWATER PROGRAM
    89 KINGS HIGHWAY
    DOVER, DE, 19901
    PHONE: 302-739-9921
    FAX: 302-739-6724

LEGEND:

PROPERTY LINE
ADJACENT PROPERTY LINE
FENCE LINE
BUILDING
CONCRETE
ASPHALT
CURB
25 MAJOR CONTOUR
24 MINOR CONTOUR
x76.9 SPOT GRADE
CB CATCH BASIN
STORM LINE
SSMH SANITARY SEWER MANHOLE
STMH STORM SEWER MANHOLE
CO CLEANOUT
GS GAS SERVICE
G GAS LINE
EM ELECTRIC METER
EBOX UNDERGROUND ELECTRIC BOX
LP LIGHT POLE
T TELEPHONE MANHOLE
WV WATER VALVE
FH FIRE HYDRANT
W WATER MAIN
B BOLLARDS
PTR PLANTER
SITE BENCHMARK
HkB SOILS BOUNDARY
(IP-1) INLET PROTECTION TYPE 1
(IP-2) INLET PROTECTION TYPE 2
(CFL) 8" COMPOST FILTER LOG
TO BE REMOVED
(LOD) LIMIT OF DISTURBANCE

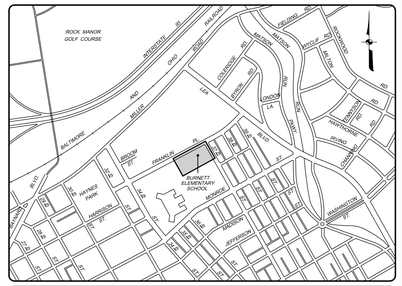

LOCATION PLAN SCALE: 1" = 800'

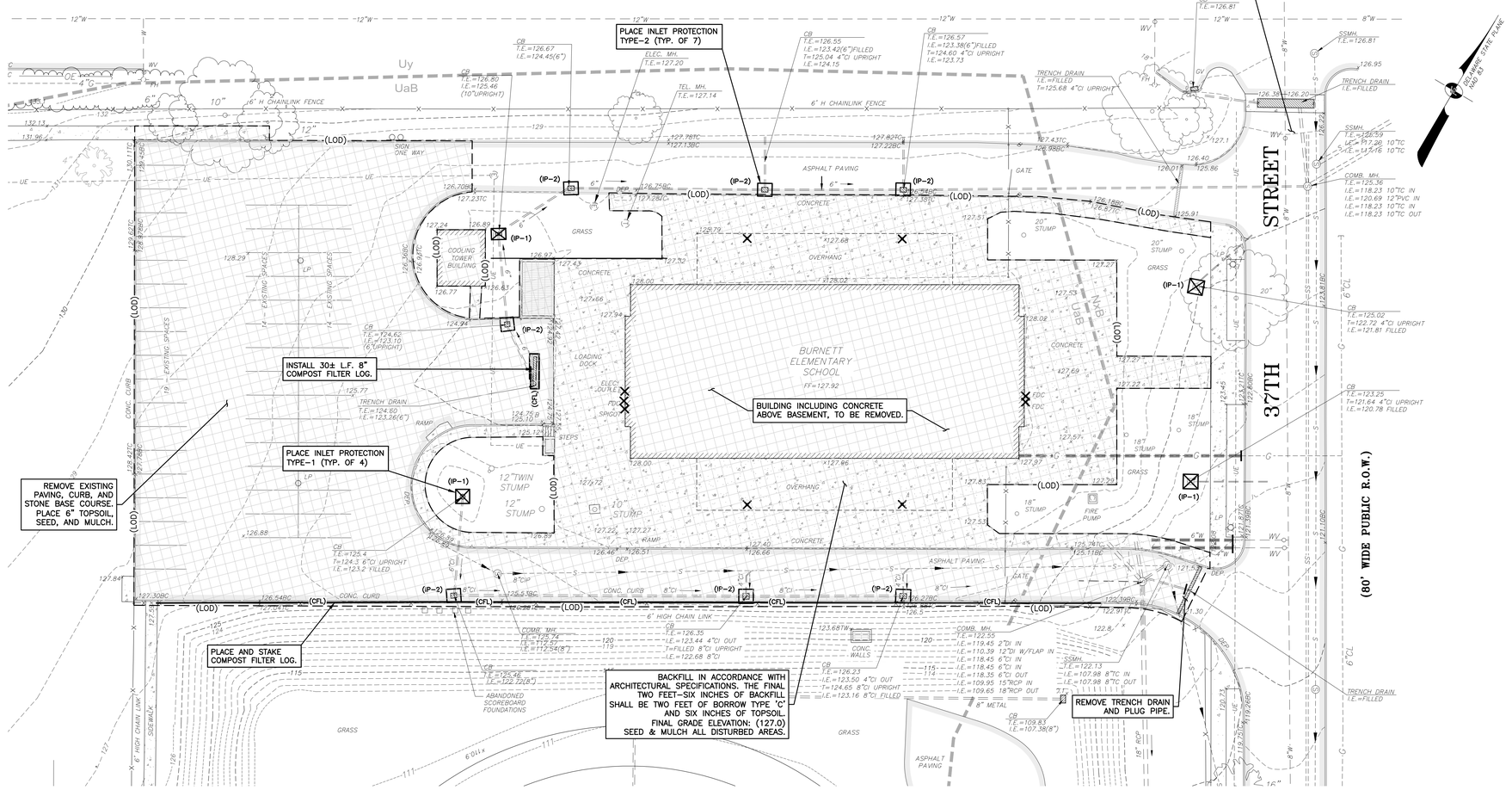

GENERAL CONSTRUCTION NOTES

1. ALL CONSTRUCTION METHODS AND MATERIALS SHALL BE IN ACCORDANCE WITH PROJECT SPECIFICATIONS, THE DELDOT STANDARD SPECIFICATIONS AND DETAILS, AND THE CITY OF WILMINGTON SPECIFICATIONS AND DETAILS, EXCEPT AS NOTED ON THIS PLAN.
2. ALL MATERIAL STORAGE SHALL BE WITHIN THE PROPERTY BOUNDARIES AND NOT ON ADJOINING PROPERTIES.
3. THE CONTRACTOR SHALL PROTECT ALL ADJOINING AND NEARBY BUILDINGS, EQUIPMENT, ALL UTILITIES, STRUCTURES, FENCES, TREES AND SHRUBBERY, ETC. FROM DAMAGE DUE TO EXCAVATION, DEMOLITION, AND CONSTRUCTION DURING THE ENTIRE CONSTRUCTION PERIOD. ANY DAMAGE CAUSED DIRECTLY OR INDIRECTLY WILL BE REPAIRED AT THE CONTRACTOR'S EXPENSE.
4. THESE DRAWINGS DO NOT INCLUDE NECESSARY COMPONENTS FOR CONSTRUCTION SAFETY. ALL CONSTRUCTION MUST BE DONE IN COMPLIANCE WITH THE OCCUPATIONAL SAFETY AND HEALTH ACT OF 1970 AND ALL RULES AND REGULATIONS THERETO APPURTENANT.
5. THE CONTRACTOR SHALL BE RESPONSIBLE FOR PROVIDING ALL EROSION AND SEDIMENTATION CONTROL MEASURES NECESSARY TO COMPLY WITH STATE OF DELAWARE REGULATIONS UNTIL ALL DISTURBED AREAS HAVE BEEN STABILIZED.

SEQUENCE OF CONSTRUCTION

1. NOTIFY THE DNREC SEDIMENT AND STORMWATER PROGRAM AND THE CITY OF WILMINGTON DEPARTMENT OF PUBLIC WORKS IN WRITING AT LEAST FIVE (5) DAYS PRIOR TO THE START OF CONSTRUCTION. FAILURE TO DO SO CONSTITUTES A VIOLATION OF THE APPROVED SEDIMENT AND STORMWATER MANAGEMENT PLAN.
2. INSTALL PERIMETER CONTROLS: INLET CONTROL, AND COMPOST FILTER LOG. ALL PERIMETER CONTROLS SHALL BE REVIEWED BY THE DNREC SITE REVIEWER PRIOR TO PROCEEDING WITH FURTHER SITE DISTURBANCE OR CONSTRUCTION.
3. THE CONTRACTOR SHALL AT ALL TIMES PROTECT AGAINST SEDIMENT OR DEBRIS-LADEN RUNOFF OR WIND FROM LEAVING THE SITE. PERIMETER CONTROLS SHALL BE CHECKED DAILY AND ADJUSTED OR REPAIRED TO FULLY CONTAIN AND CONTROL SEDIMENTATION ON THE SITE. ACCUMULATED SEDIMENT SHALL BE REMOVED WHEN IT HAS REACHED HALF OF THE EFFECTIVE CAPACITY OF THE CONTROL. IN ADDITION, THE CONTRACTOR MAY NEED TO ADJUST OR REPAIR MEASURES IN TIMES OF ADVERSE WEATHER CONDITIONS.
4. INSTALL ALL REQUIRED SAFETY AND SECURITY MEASURES.
5. BEGIN BUILDING DEMOLITION AND PAVING DEMOLITION.
6. BACKFILL THE BUILDING DEMOLITION IN ACCORDANCE WITH ARCHITECTURAL SPECIFICATIONS. PLACE FINAL TWO FEET-SIX INCHES OF FILL IN ACCORDANCE WITH SHEET CS-100. PLACE 6" TOPSOIL IN THE AREA OF PAVING DEMOLITION. ALL DISTURBED AREAS SHALL BE SEEDED AND MULCHED WITH TEMPORARY SEED MIXTURE (SEE SHEET CS-101).
7. INLET PROTECTION AND COMPOST FILTER LOGS CAN REMAIN IN PLACE FOR FUTURE PHASE.

ADDITIONAL EROSION CONTROL NOTES

1. THE CONTRACTOR SHALL BE RESPONSIBLE FOR REPAIRING AND MAINTAINING ALL EROSION AND SEDIMENT CONTROL PRACTICES DURING CONSTRUCTION AND UTILITY INSTALLATION.
2. IF DUST BECOMES A PROBLEM, SPRINKLE WITH WATER EVERY HOUR.

DEMOLITION NOTES:

1. REFER TO ARCHITECTURAL PLANS AND SPECIFICATIONS FOR BUILDING DEMOLITION.
2. REFER TO CONTRACT GENERAL REQUIREMENTS FOR REQUIRED SITE SAFETY AND SECURITY.
3. ALL EROSION CONTROL MEASURES SHOWN (INLET PROTECTION, AND COMPOST FILTER LOGS) SHALL BE IN PLACE PRIOR TO BUILDING DEMOLITION.
4. EXISTING WATER AND GAS SERVICES SHALL BE CAPPED IN ACCORDANCE WITH UTILITY COMPANY REQUIREMENTS AND COORDINATED WITH THE SAME.
5. ELECTRICAL SERVICE SHALL BE SHUT OFF IN ACCORDANCE WITH DELMARVA POWER REQUIREMENTS AND COORDINATED WITH THE SAME.
6. FENCE SHALL BE REMOVED WHERE NEEDED FOR ACCESS.
7. ALL ITEMS THAT ARE CLEARED AND DEMOLISHED AND HAULED OFF SITE SHALL BE LAWFULLY DISPOSED. REFER TO PROJECT SPECIFICATIONS.

UTILITY NOTE:

EXISTING UTILITIES ARE SHOWN IN ACCORDANCE WITH THE BEST AVAILABLE INFORMATION. COMPLETENESS OR CORRECTNESS THEREOF IS NOT GUARANTEED. IT SHALL BE THE CONTRACTORS' RESPONSIBILITY TO CONTACT THE UTILITY COMPANIES INVOLVED IN ORDER TO SECURE THE MOST ACCURATE INFORMATION AVAILABLE AS TO UTILITY LOCATION AND ELEVATION. NO CONSTRUCTION AROUND OR ADJACENT TO UTILITIES SHALL BEGIN WITHOUT NOTIFYING THEIR OWNERS AT LEAST 48 HOURS IN ADVANCE. THE CONTRACTOR SHALL TAKE THE NECESSARY PRECAUTIONS TO PROTECT THE EXISTING UTILITIES AND MAINTAIN UNINTERRUPTED SERVICE AND ANY DAMAGE DONE TO THEM DUE TO THE CONTRACTORS' NEGLIGENCE SHALL BE IMMEDIATELY AND COMPLETELY REPAIRED AT CONTRACTORS' EXPENSE. TO LOCATE EXISTING UTILITIES IN THE FIELD PRIOR TO CONSTRUCTION, THE CONTRACTOR SHALL CONTACT MISS UTILITY OF DELMARVA (TELEPHONE 800-282-8555). THE FOLLOWING UTILITIES HAVE BEEN IDENTIFIED BY MISS UTILITY AS HAVING UNDERGROUND FACILITIES IN THE AREA OF THIS PROJECT (MISS UTILITY NO. 162730697):

DE. DEPT. OF NAT. RESOURCES & ENV.
DELMARVA POWER
DELMARVA POWER GAS
COMCAST - UTILIQUEST
NEW CASTLE DEPARTMENT OF SPECIAL SERVICES
CITY OF WILMINGTON
VERIZON

EROSION CONTROL MEASURES SHOWN MUST BE IN PLACE PRIOR TO SITE DEMOLITION.

REFER TO CONTRACT GENERAL REQUIREMENTS FOR CONSTRUCTION FENCING, SECURITY, AND SAFETY.

THE TYPES OF SOILS LOCATED ON THIS SITE HAS BEEN IDENTIFIED AS: NxB, NESHAMINY-URBAN LAND COMPLEX, 0 TO 8% SLOPES, UoB, UDORTHENTS, BEDROCK SUBSTRATUM, 0 TO 8% SLOPES, AND Uy, URBAN LAND, BEDROCK SUBSTRATUM

FOR REFERENCE ONLY

MISS UTILITY OF DELMARVA - DELAWARE 1-800-282-8555 CALL BEFORE YOU DIG!

EROSION CONTROL PLAN
FOR BUILDING DEMOLITION
MARGUERITE H. BURNETT MIDDLE SCHOOL DEMOLITION PROJECT
CITY OF WILMINGTON NEW CASTLE COUNTY
DELAWARE

SCALE: 1"=20' MAY 1, 2017

20 0 10 20 40 80
GRAPHIC SCALE (FEET)

ABHA architects
1621 N. Lincoln Street
Wilmington, DE 19806
(P)302-658-6426
(F)302-658-8431
abhagen@ABHA.com
www.ABHA.com

CONSULTANTS
Vandemark & Lynch, Inc.
Civil Engineers
4305 Miller Road
Wilmington, DE 19899

PROJECT
MARGUERITE H. BURNETT MIDDLE SCHOOL DEMOLITION PROJECT
701 West 34th Street
Wilmington, Delaware 19802

OWNER
Brandywine School District
1000 Pennsylvania Avenue
Claymont, DE 19703

MARK	DATE	DESCRIPTION
1	9/8/17	EXPANDED DISTURBED AREA

PROJECT NO: 24369.00
FILE NAME V&L NO. 24369.00-EROS-01
DRAWN BY: D. SHEEKY
CHECKED BY: S. ROSENFELD

The professional services of ABHA Architects, Inc. are undertaken for and performed in the interest of No contractual obligation is assumed by ABHA Architects, Inc. for the benefit of any other person involved in the project.
These documents are owned by ABHA Architects, Inc. and shall not be used without written permission. Copyright ABHA Architects, Inc. © 2006

SHEET TITLE
BUILDING DEMOLITION PLAN FOR REFERENCE ONLY

SCALE: 1" = 20'

SHEET 1 OF 1

C-101A

24369.00-EROS-01

P:\Land Projects\24369 Burnett Elem School\Plan Prod\ISC Plan\24369.00-EROS-01-REF.dwg, 11/29/2017 1:13:41 PM, David J. Sheeky, VanDemark & Lynch, Inc.

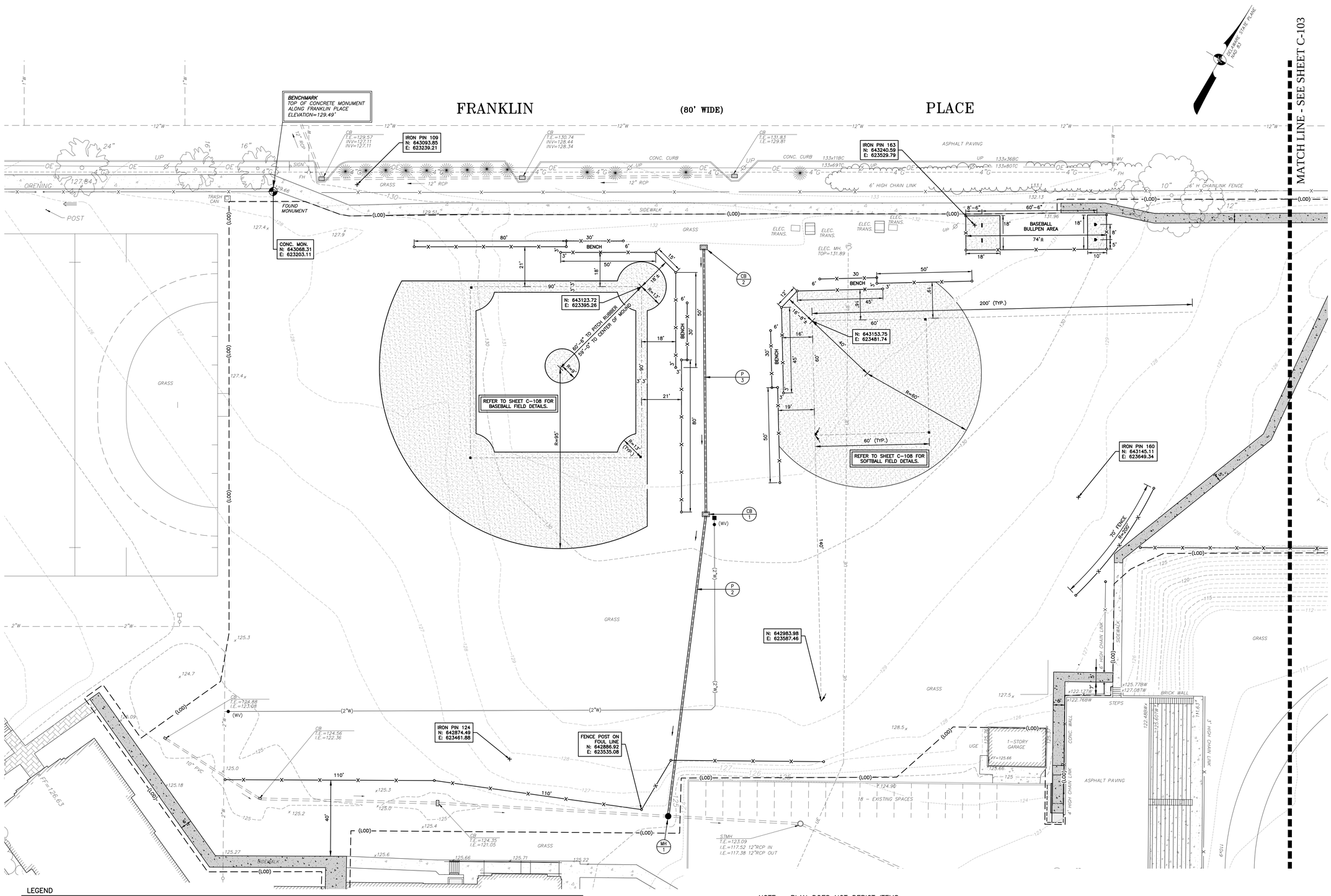

NOTE: PLAN DOES NOT DEPICT ITEMS DEMOLISHED PER SHEETS C-100, C-101, AND C-101A.

LEGEND

EXISTING		PROPOSED
119x5	SPOT GRADE	N/A
—279—	CONTOUR	N/A
	BUILDING	N/A
	CONCRETE	
	BRICK SIDEWALK	N/A
	CONCRETE WALL	N/A
	PAVEMENT	N/A
	CURB	
—UE—	UNDERGROUND ELECTRIC	N/A
—6"W—	WATER LINE	N/A
—8"F—	FIRE LINE	N/A
—4"G—	GAS LINE	N/A

EXISTING		PROPOSED
127C	COMBINED SEWER LINE	N/A
12"RCP	STORM LINE	P NO.
COMB. MH.	COMBINED SEWER MANHOLE	N/A
STMH.	STORM MANHOLE	N/A
CB	CATCH BASIN	CB NO.
N/A	FLOW PATH	
UP	UTILITY POLE	N/A
ELEC. MH.	ELECTRIC MANHOLE	N/A
TEL. MH.	TELEPHONE MANHOLE	N/A
FH	FIRE HYDRANT	N/A
WV	WATER VALVE	N/A
GV	GAS VALVE	N/A

EXISTING		PROPOSED
CO	CLEANOUT	N/A
	SIGN	N/A
LP	LIGHT POLE	N/A
	SITE BENCHMARK	N/A
MON.	MONUMENT	N/A
—X—X—	FENCE	—X—X—
16"	DECIDUOUS TREE/SIZE	N/A
10"	EVERGREEN TREE/SIZE	N/A
N/A	LIMIT OF DISTURBANCE	—(LOD)—
N/A	STABILIZATION MATTING-CHANNEL	

MISS UTILITY OF DELMARVA - DELAWARE
1-800-282-8555
CALL BEFORE YOU DIG!

ABHA architects
1621 N. Lincoln Street
Wilmington, DE 19806
(P)302-658-6426
(F)302-658-8431
abhagen@ABHA.com
www.ABHA.com

CONSULTANTS

Vandemark & Lynch, Inc.
Civil Engineers
4305 Miller Road
Wilmington, DE 19899

PROJECT

MARGUERITE H. BURNETT MIDDLE SCHOOL DEMOLITION PROJECT

701 West 34th Street
Wilmington, Delaware 19802

OWNER

Brandywine School District

1000 Pennsylvania Avenue
Claymont, DE 19703

MARK	DATE	DESCRIPTION

PROJECT NO:	24369.00
FILE NAME	V&L NO. 24369.00-CONST-01
DRAWN BY:	D. SHEEKY
CHECKED BY:	S. ROSENFELD

The professional services of ABHA Architects, Inc. are undertaken for and performed solely for the benefit of the person or entity to whom this document is addressed by ABHA Architects, Inc. for the benefit of any other person involved in the project.
These documents are owned by ABHA Architects, Inc. and shall not be used without written permission. Copyright ABHA Architects, Inc. © 2016

SHEET TITLE

CONSTRUCTION LAYOUT PLAN

SCALE: 1" = 20'

C-102

24369.00-CONST-01

P:\Land Projects\24369 Burnett Elem School\Plan Prod\SC Plan\24369.00-CONST-01.dwg, 11/28/2017 1:14:02 PM, David J. Sheeky, VanDemark & Lynch, Inc.

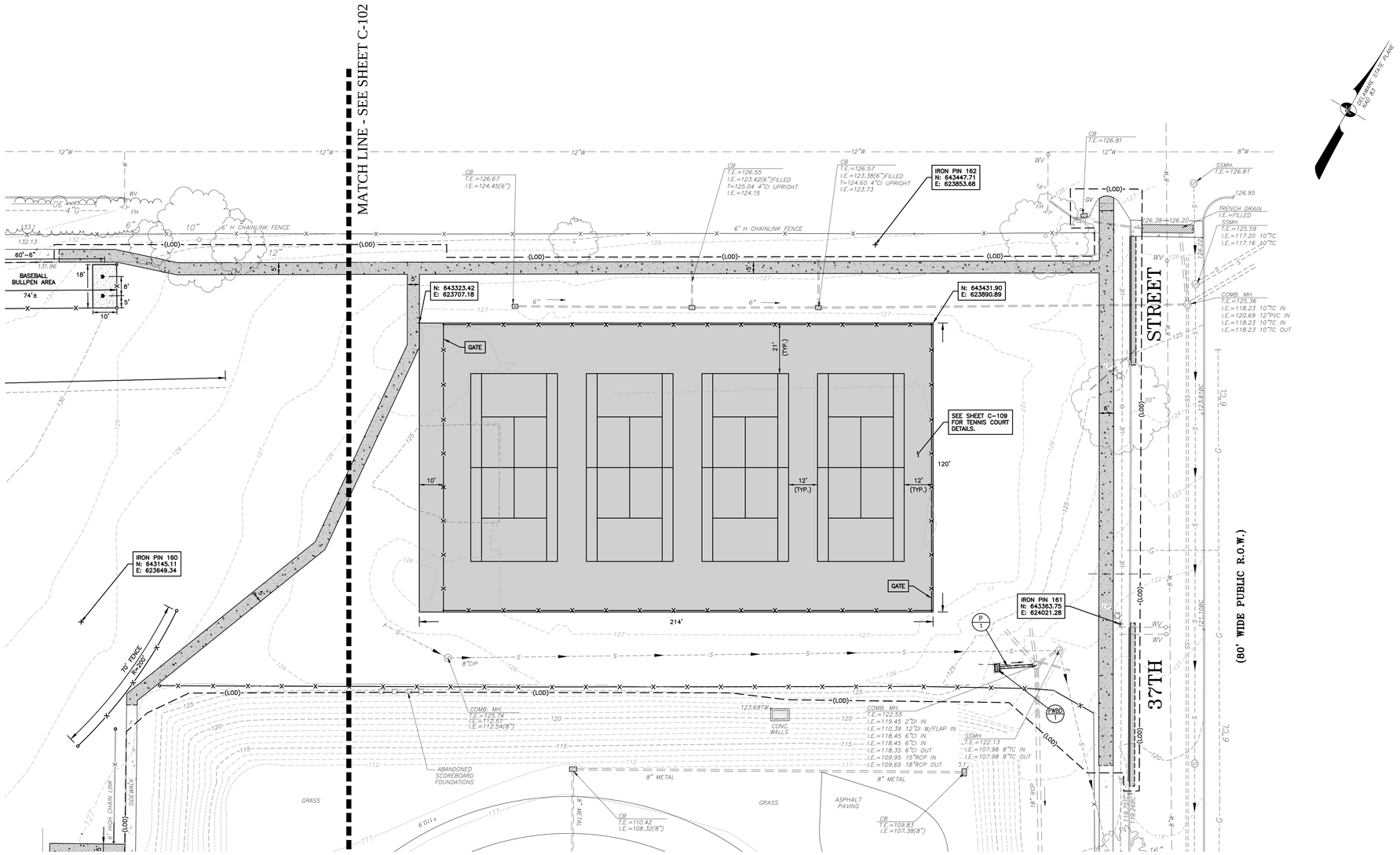

NOTE: PLAN DOES NOT DEPICT ITEMS DEMOLISHED PER SHEETS C-100, C-101, AND C-101A.

LEGEND

EXISTING		PROPOSED
119x5	SPOT GRADE	N/A
279	CONTOUR	N/A
	BUILDING	N/A
	CONCRETE	
	BRICK SIDEWALK	N/A
	CONCRETE WALL	N/A
	PAVEMENT	N/A
	CURB	
UE	UNDERGROUND ELECTRIC	N/A
6"W	WATER LINE	N/A
8"F	FIRE LINE	N/A
4"G	GAS LINE	N/A

EXISTING		PROPOSED
12"C	COMBINED SEWER LINE	N/A
12"RCP	STORM LINE	P NO.
COMB. MH.	COMBINED SEWER MANHOLE	N/A
STMH.	STORM MANHOLE	N/A
CB	CATCH BASIN	CB NO.
N/A	FLOW PATH	
UP	UTILITY POLE	N/A
ELEC. MH.	ELECTRIC MANHOLE	N/A
TEL. MH.	TELEPHONE MANHOLE	N/A
FH	FIRE HYDRANT	N/A
WV	WATER VALVE	N/A
GV	GAS VALVE	N/A

EXISTING		PROPOSED
CO	CLEANOUT	N/A
	SIGN	N/A
LP	LIGHT POLE	N/A
	SITE BENCHMARK	N/A
MON.	MONUMENT	N/A
X—X—X	FENCE	X—X—X
16"	DECIDUOUS TREE/SIZE	N/A
10"	EVERGREEN TREE/SIZE	N/A
N/A	LIMIT OF DISTURBANCE	—(LOD)—
N/A	STABILIZATION MATTING-CHANNEL	

MISS UTILITY OF DELMARVA - DELAWARE
1-800-282-8555
CALL BEFORE YOU DIG!

ABHA architects
1621 N. Lincoln Street
Wilmington, DE 19806
(P)302-658-6426
(F)302-658-8431
abhagen@ABHA.com
www.ABHA.com

CONSULTANTS

Vandemark & Lynch, Inc.
Civil Engineers
4305 Miller Road
Wilmington, DE 19899

PROJECT

MARGUERITE H. BURNETT MIDDLE SCHOOL DEMOLITION PROJECT

701 West 34th Street
Wilmington, Delaware 19802

OWNER

Brandywine School District

1000 Pennsylvania Avenue
Claymont, DE 19703

MARK	DATE	DESCRIPTION

PROJECT NO:	24369.00
FILE NAME	V&L NO. 24369.00-CONST-01
DRAWN BY:	D. SHEEKY
CHECKED BY:	S. ROSENFELD

The professional services of ABHA Architects, Inc. are undertaken for and performed in the interest of No contractual obligation is assumed by ABHA Architects, Inc. for the benefit of any other person involved in the project.

These documents are owned by ABHA Architects, Inc. and shall not be used without written permission. Copyright: ABHA Architects, Inc. © 2006

SHEET TITLE

CONSTRUCTION LAYOUT PLAN

SCALE: 1" = 20'

C-103

P:\Land Projects\24369 Burnett Elem School\Plan Prod\SC Plan\24369.00-CONST-01.dwg, 11/29/2017 11:41:11 PM, David J. Sheeky, VanDemark & Lynch, Inc.

LEGEND

EXISTING		PROPOSED
119×5	SPOT GRADE	×(119.5)
279	CONTOUR	(279)
	BUILDING	N/A
	CONCRETE	
	BRICK SIDEWALK	N/A
	CONCRETE WALL	N/A
	PAVEMENT	N/A
	CURB	
UE	UNDERGROUND ELECTRIC	N/A
6"W	WATER LINE	(W)
8"F	FIRE LINE	N/A
4"G	GAS LINE	N/A
12"C	COMBINED SEWER LINE	N/A

EXISTING		PROPOSED
12"RCP	STORM LINE	P NO.
COMB. MH.	COMBINED SEWER MANHOLE	N/A
STMH.	STORM MANHOLE	CB NO.
CB	CATCH BASIN	
N/A	FLOW PATH	N/A
UP	UTILITY POLE	N/A
ELEC. MH.	ELECTRIC MANHOLE	N/A
TEL. MH.	TELEPHONE MANHOLE	N/A
FH	FIRE HYDRANT	N/A
WV	WATER VALVE	(WV)
GV	GAS VALVE	N/A
CO	CLEANOUT	N/A
	SIGN	N/A
LP	LIGHT POLE	N/A

EXISTING		PROPOSED
	FENCE	
16"	DECIDUOUS TREE/SIZE	N/A
10"	EVERGREEN TREE/SIZE	N/A
	SITE BENCHMARK	N/A
MON.	MONUMENT	N/A
N/A	LIMIT OF DISTURBANCE	-(LOD)-
N/A	STABILIZATION MATTING-CHANNEL	(SM-C)

STORM SEWER MANHOLE SCHEDULE (MH NO.)

NO.	TYPE	SIZE	T.E.	I.E. (IN)	I.E. (OUT)
MH-1*	STANDARD	48"	125.5	121.52 (P-2)	118.8± (EX.12"RCP)

* OVER EXISTING LINE. PRIOR TO PRECASTING MANHOLE, THE CONTRACTOR SHALL DETERMINE THE DEPTH OF THE EXISTING LINE.

STORM CATCH BASIN SCHEDULE (CB NO.)

NO.	TYPE			T.E.	I.E. (IN)	I.E. (OUT)
	BOX	TOP	GRATE			
PWBD-1	PWBD-1	–	PWBD	122.30	--	118.80 (P-1)
CB-1	34"x24"	A	1	128.00	123.60 (P-3)	124.10 (P-4) 123.60 (P-2)
CB-2	34"x24"	A	1	128.20	--	125.00 (P-3)

STORM SEWER PIPE SCHEDULE (P NO.)

NO.	SIZE/TYPE	LENGTH	SLOPE
P-1	12" PVCP	16 L.F.	0.040 FT/FT
P-2	12" PVCP	160 L.F.	0.013 FT/FT
P-3	12" PVCP	140 L.F.	0.010 FT/FT
P-4	8" PEP OR PVCP	155 L.F.	0.020 FT/FT

PVC PIPE SHALL BE SDR-26.

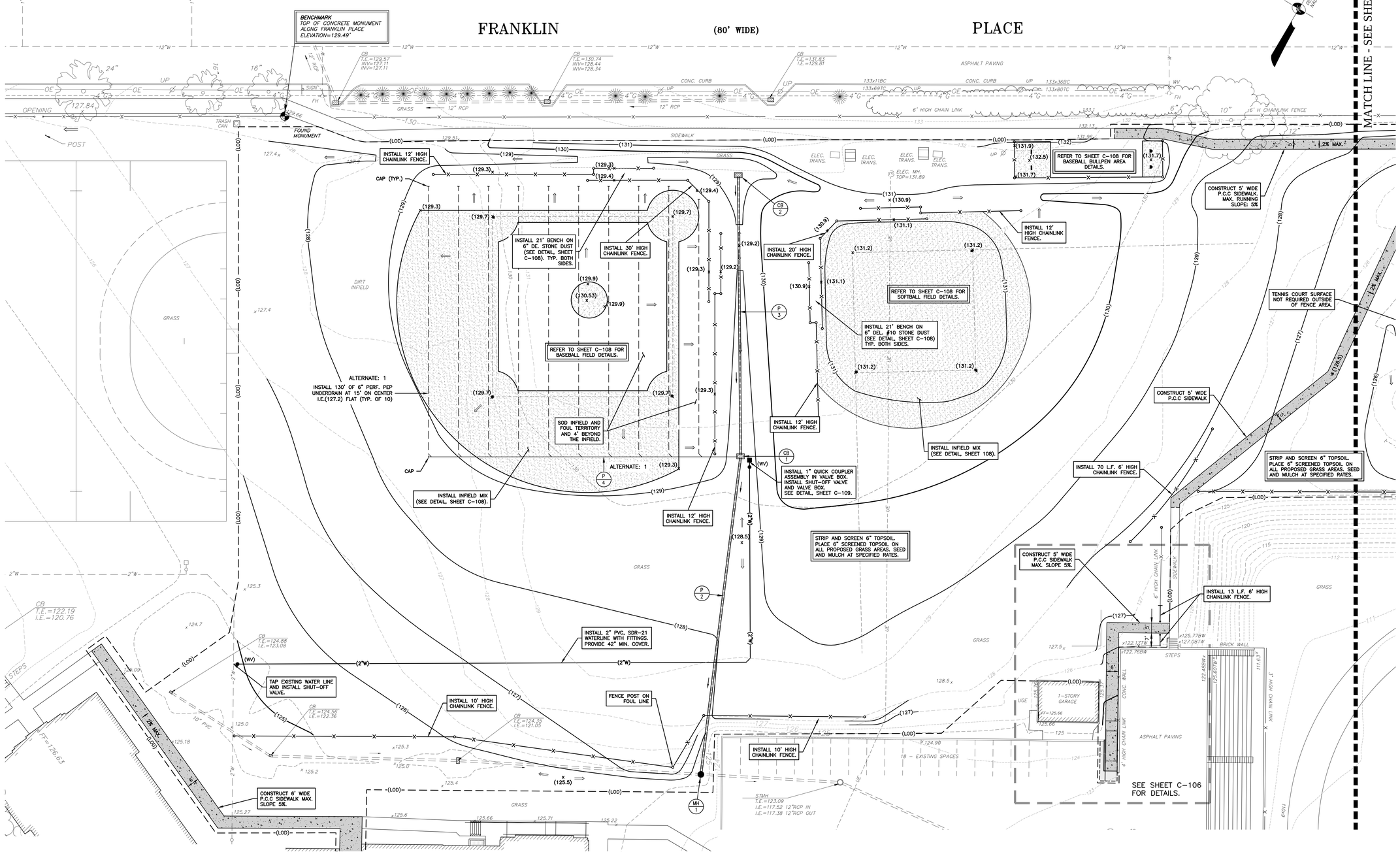

NOTE: PLAN DOES NOT DEPICT ITEMS DEMOLISHED PER SHEETS C-100, C-101, AND C-101A.

ABHA architects
1621 N. Lincoln Street
Wilmington, DE 19806
(P)302-658-6426
(F)302-658-8431
abhagen@ABHA.com
www.ABHA.com

CONSULTANTS
Vandemark & Lynch, Inc.
Civil Engineers
4305 Miller Road
Wilmington, DE 19899

PROJECT
MARGUERITE H. BURNETT MIDDLE SCHOOL DEMOLITION PROJECT

701 West 34th Street
Wilmington, Delaware 19802

OWNER
Brandywine School District

1000 Pennsylvania Avenue
Claymont, DE 19703

MARK	DATE	DESCRIPTION

PROJECT NO:	24369.00
FILE NAME	V&L NO. 24369.00-CONST-02
DRAWN BY:	D. SHEEKY
CHECKED BY:	S. ROSENFELD

The professional services of ABHA Architects, Inc. are undertaken for and performed in the interest of _____ No contractual obligation is assumed by ABHA Architects, Inc. for the benefit of any other person involved in the project.
These documents are owned by ABHA Architects, Inc. and shall not be used without written permission. Copyright _____ ABHA Architects, Inc. © 2006

SHEET TITLE
SITE CONSTRUCTION PLAN

SCALE: 1" = 20'

C-104

5 OF 10

24369.00-CONST-02

P:\Land Projects\24369 Burnett Elem School\Plan Prod\SC Plan\24369.00-CONST-02.dwg, 11/29/2017 1:31:17 PM, David J. Sheeky, VanDemark & Lynch, Inc.

STORM SEWER MANHOLE SCHEDULE (MH NO.)					
NO.	TYPE	SIZE	T.E.	I.E. (IN)	I.E. (OUT)
MH-1*	STANDARD	48"	125.5	121.52 (P-2)	118.8± (EX.12"RCP)

* OVER EXISTING LINE. PRIOR TO PRECASTING MANHOLE, THE CONTRACTOR SHALL DETERMINE THE DEPTH OF THE EXISTING LINE.

STORM CATCH BASIN SCHEDULE (CB NO.)						
NO.	TYPE			T.E.	I.E. (IN)	I.E. (OUT)
	BOX	TOP	GRATE			
PWBD-1	PWBD-1	–	PWBD	122.30	--	118.80 (P-1)
CB-1	34"x24"	A	1	128.00	123.60 (P-3)	124.10 (P-4) 123.60 (P-2)
CB-2	34"x24"	A	1	128.20	--	125.00 (P-3)

STORM SEWER PIPE SCHEDULE (P NO.)			
NO.	SIZE/TYPE	LENGTH	SLOPE
P-1	12" PVCP	16 L.F.	0.040 FT/FT
P-2	12" PVCP	160 L.F.	0.013 FT/FT
P-3	12" PVCP	140 L.F.	0.010 FT/FT
P-4	8" PEP OR PVCP	155 L.F.	0.020 FT/FT

PVC PIPE SHALL BE SDR-26.

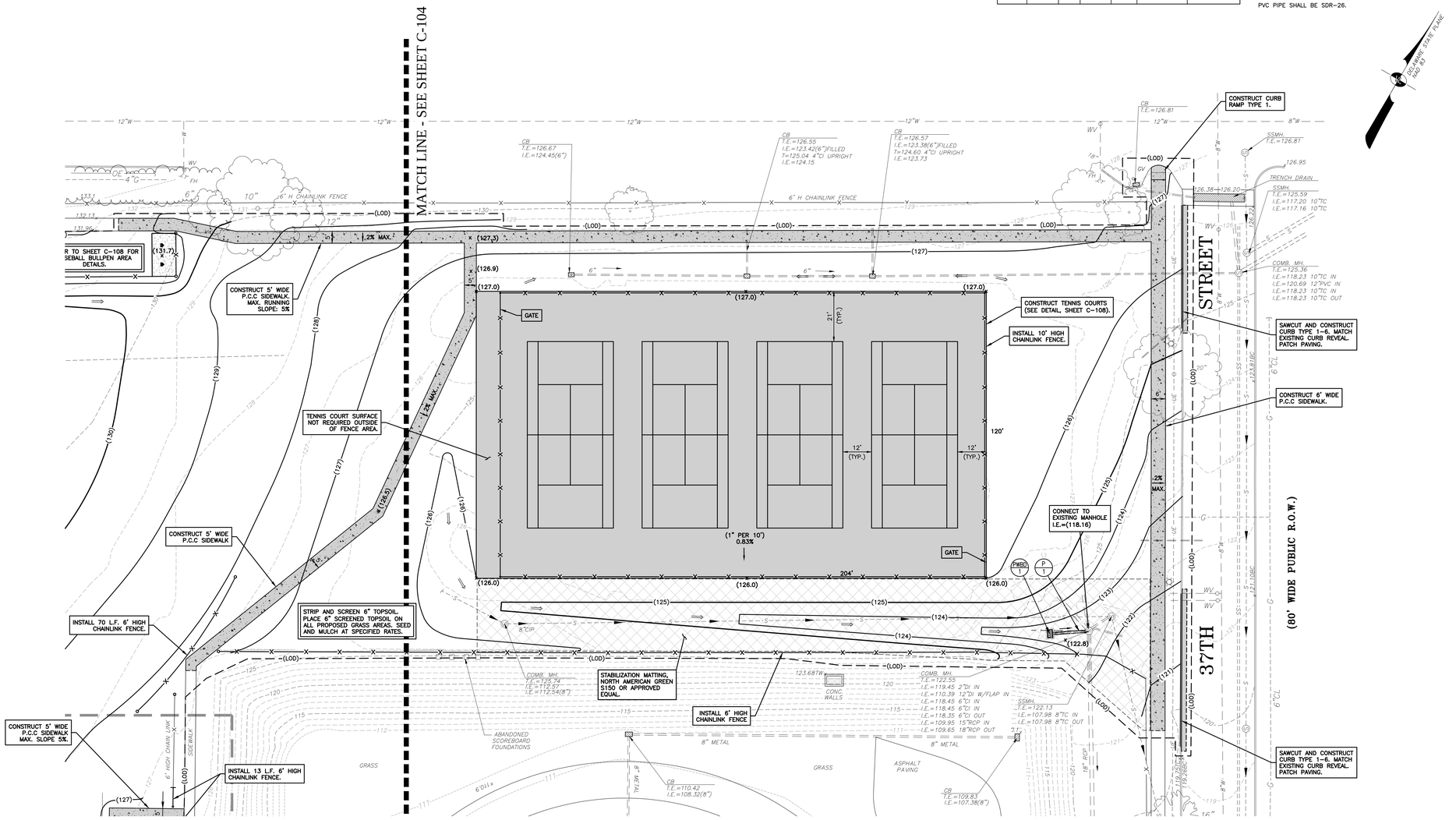

NOTE: PLAN DOES NOT DEPICT ITEMS DEMOLISHED PER SHEETS C-100, C-101, AND C-101A.

LEGEND

EXISTING		PROPOSED
119x5	SPOT GRADE	x(119.5)
279	CONTOUR	(279)
	BUILDING	N/A
	CONCRETE	
	BRICK SIDEWALK	N/A
	CONCRETE WALL	N/A
	PAVEMENT	N/A
	CURB	
UE	UNDERGROUND ELECTRIC	N/A
6"W	WATER LINE	(W)
8"F	FIRE LINE	N/A
4"G	GAS LINE	N/A
12"C	COMBINED SEWER LINE	N/A

EXISTING		PROPOSED
12"RCP	STORM LINE	(P NO.)
COMB. MH.	COMBINED SEWER MANHOLE	N/A
STMH.	STORM MANHOLE	N/A
CB	CATCH BASIN	(CB NO.)
N/A	FLOW PATH	
UP	UTILITY POLE	N/A
ELEC. MH.	ELECTRIC MANHOLE	N/A
TEL. MH.	TELEPHONE MANHOLE	N/A
FH	FIRE HYDRANT	N/A
WV	WATER VALVE	(WV)
GV	GAS VALVE	N/A
CO	CLEANOUT	N/A
	SIGN	N/A
LP	LIGHT POLE	N/A

EXISTING		PROPOSED
	FENCE	
16"	DECIDUOUS TREE/SIZE	N/A
10"	EVERGREEN TREE/SIZE	N/A
	SITE BENCHMARK	N/A
MON.	MONUMENT	N/A
N/A	LIMIT OF DISTURBANCE	-(LOD)-
N/A	STABILIZATION MATTING-CHANNEL	(SM-C)

SEE SHEET C-101A, FOR PREVIOUS BUILDING AND PARKING DEMOLITION, AND EROSION CONTROL.

REFER TO CONTRACT GENERAL CONDITIONS FOR REQUIREMENTS FOR CONSTRUCTION FENCING, SECURITY, AND SAFETY.

20 0 10 20 40 80
GRAPHIC SCALE (FEET)

MISS UTILITY OF DELMARVA · DELAWARE 1-800-282-8555 CALL BEFORE YOU DIG!

ABHA architects
1621 N. Lincoln Street
Wilmington, DE 19806
(P)302-658-6426
(F)302-658-8431
abhagen@ABHA.com
www.ABHA.com

CONSULTANTS
Vandemark & Lynch, Inc.
Civil Engineers
4305 Miller Road
Wilmington, DE 19899

PROJECT
MARGUERITE H. BURNETT MIDDLE SCHOOL DEMOLITION PROJECT

701 West 34th Street
Wilmington, Delaware 19802

OWNER
Brandywine School District
1000 Pennsylvania Avenue
Claymont, DE 19703

MARK	DATE	DESCRIPTION

PROJECT NO: 24369.00
FILE NAME: V&L NO. 24369.00-CONST-01
DRAWN BY: D. SHEEKY
CHECKED BY: S. ROSENFELD

The professional services of ABHA Architects, Inc. are undertaken for and performed in the interest of Brandywine School District. No contractual obligation is assumed by ABHA Architects, Inc. for the benefit of any other person involved in the project.
These documents are owned by ABHA Architects, Inc. and shall not be used without written permission. Copyright: ABHA Architects, Inc. © 2006

SHEET TITLE
SITE CONSTRUCTION PLAN

SCALE: 1" = 20'

C-105

6 OF 10

24369.00-CONST-02

P:\Land Projects\24369 Burnett Elem School\Plan Prod\SC Plan\24369.00-CONST-02.dwg, 11/29/2017 1:31:26 PM, David J. Sheeky, VanDemark & Lynch, Inc.

LEGEND

EXISTING		PROPOSED	EXISTING		PROPOSED
119x5	SPOT GRADE	x(119.5)	12"RCP	STORM LINE	N/A
279	CONTOUR	(279)	COMB. MH.	COMBINED SEWER MANHOLE	N/A
	BUILDING	N/A	STMH.	STORM MANHOLE	N/A
	CONCRETE		CB	CATCH BASIN	N/A
	BRICK SIDEWALK	N/A	N/A	FLOW PATH	
	CONCRETE WALL		UP	UTILITY POLE	N/A
	PAVEMENT	N/A	ELEC. MH.	ELECTRIC MANHOLE	N/A
	CURB	N/A	TEL. MH.	TELEPHONE MANHOLE	N/A
UE	UNDERGROUND ELECTRIC	N/A	FH	FIRE HYDRANT	N/A
6"W	WATER LINE	N/A	WV	WATER VALVE	N/A
8"F	FIRE LINE	N/A	GV	GAS VALVE	N/A
4"G	GAS LINE	N/A	CO	CLEANOUT	N/A
12"TC	COMBINED SEWER LINE	N/A		SIGN	N/A
			LP	LIGHT POLE	N/A

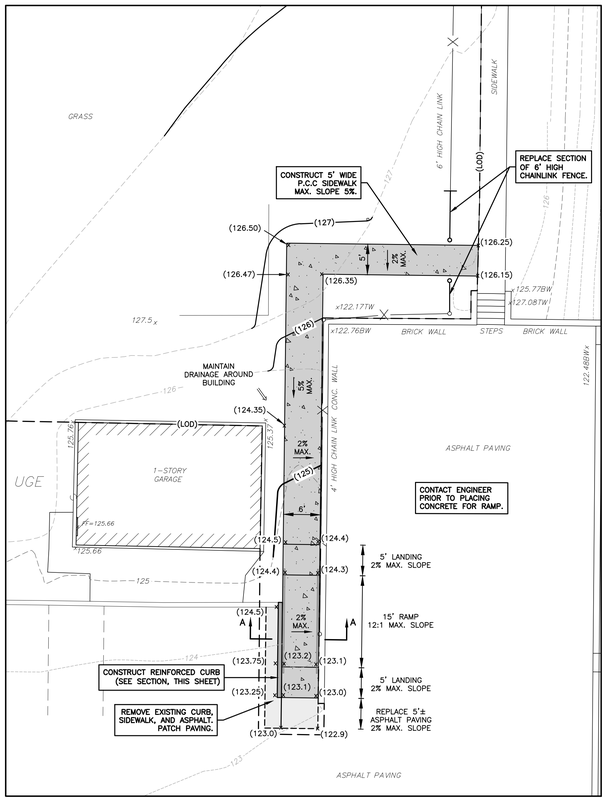

REINFORCED CURB AND RAMP - PLAN VIEW

SCALE: 1"=10'

10 0 5 10 20 40

GRAPHIC SCALE (FEET)

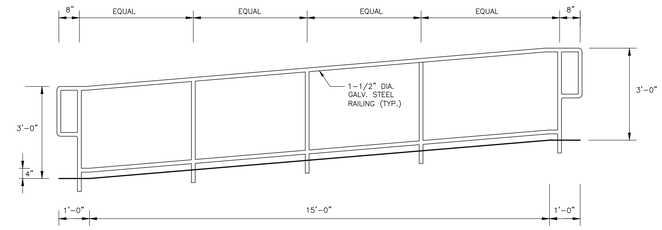

RAMP HANDRAIL DETAIL

SCALE: 1/2" = 1'-0"

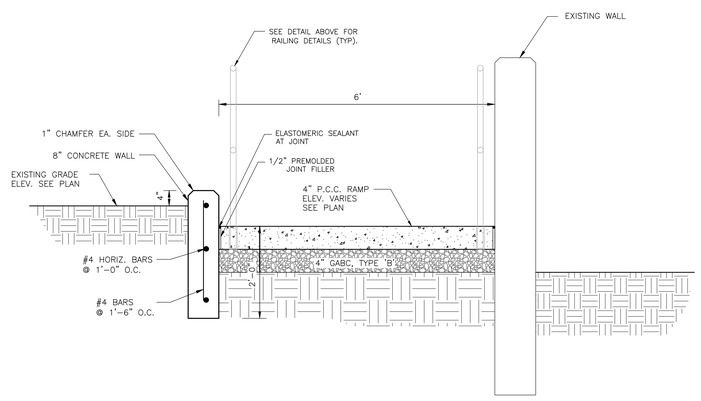

REINFORCED CURB AND RAMP SECTION A-A

SCALE: 3/4" = 1'-0"

ABHA architects

1621 N. Lincoln Street
Wilmington, DE 19806
(P)302-658-6426
(F)302-658-8431
abhagen@ABHA.com
www.ABHA.com

CONSULTANTS

Vandemark & Lynch, Inc.
Civil Engineers
4305 Miller Road
Wilmington, DE 19899

PROJECT

MARGUERITE H. BURNETT MIDDLE SCHOOL DEMOLITION PROJECT

701 West 34th Street
Wilmington, Delaware 19802

OWNER

Brandywine School District

1000 Pennsylvania Avenue
Claymont, DE 19703

MARK	DATE	DESCRIPTION

PROJECT NO: 24369.00
FILE NAME: V&L NO. 24369.00-CONST-02
DRAWN BY: D. SHEEKY
CHECKED BY: S. ROSENFELD

The professional services of ABHA Architects, Inc. are undertaken for and performed in the interest of ABHA Architects, Inc. for the benefit of any other person involved in the project. No contractual obligation is assumed by

These documents are owned by ABHA Architects, Inc. and shall not be used without written permission. Copyright ABHA Architects, Inc. © 2006

SHEET TITLE

RETAINING WALL AND RAMP SECTION

SCALE: 1" = 10'

MISS UTILITY OF DELMARVA - DELAWARE 1-800-282-8555 CALL BEFORE YOU DIG!

C-106

7 OF 10

24369.00-CONST-02

P:\Land Projects\24369 Burnett Elem School\Plan Prod\SC Plan\24369.00-CONST-03.dwg, 11/29/2017 1:14:55 PM, David J. Sheeky, VanDemark & Lynch, Inc.

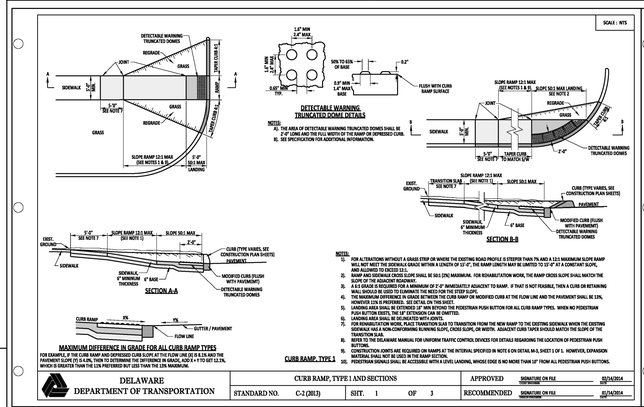

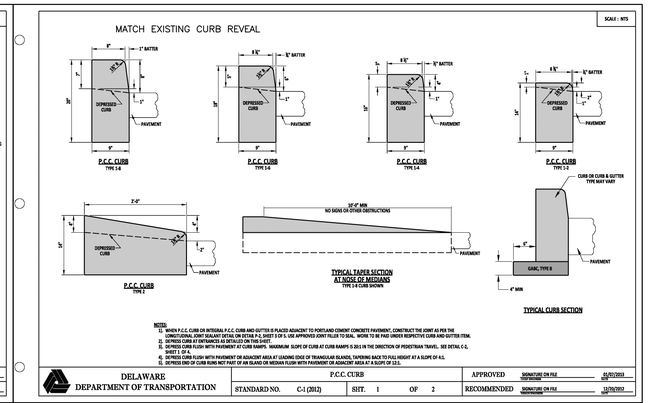

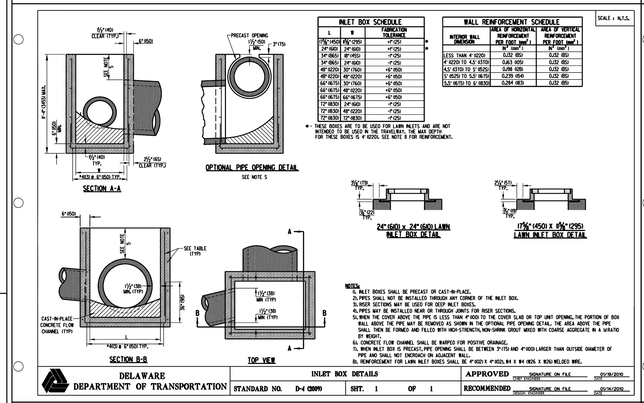

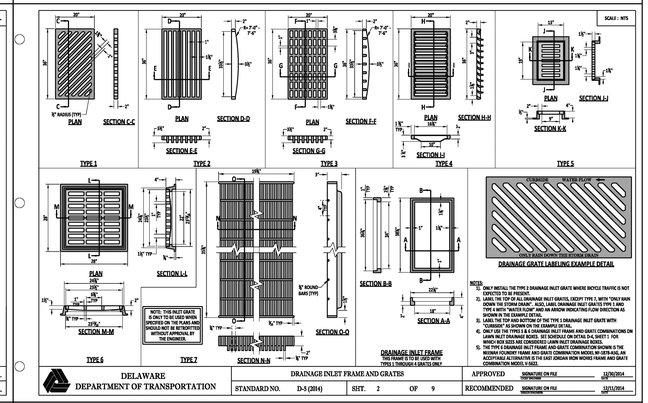

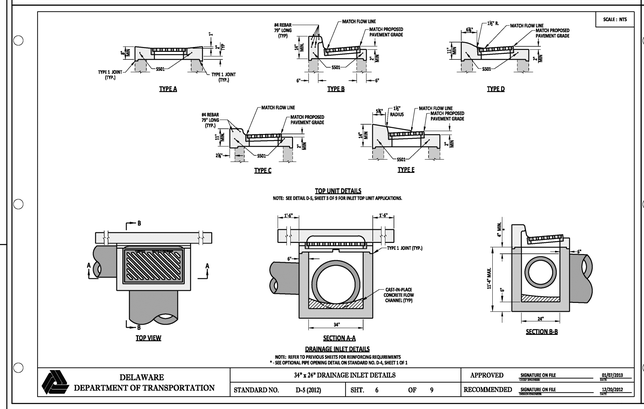

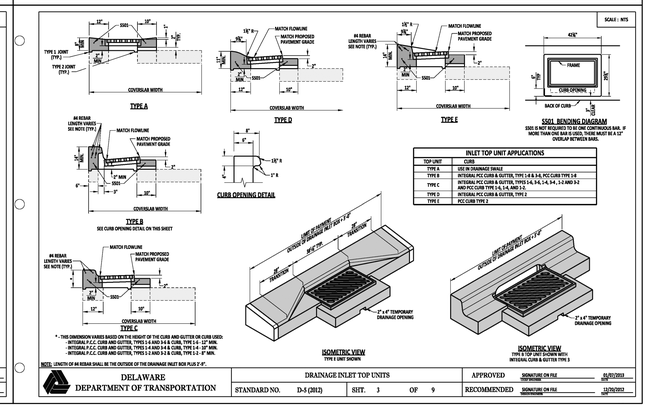

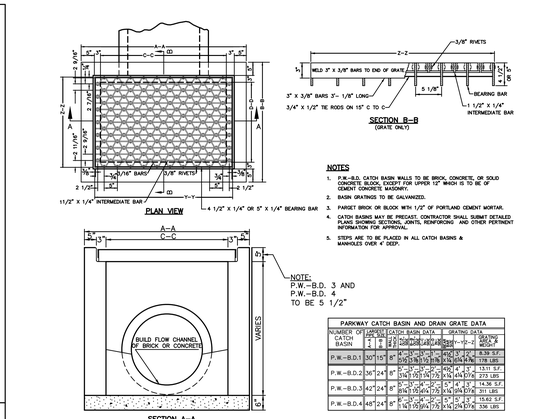

P.W.-B.D. CATCH BASIN

NOT TO SCALE

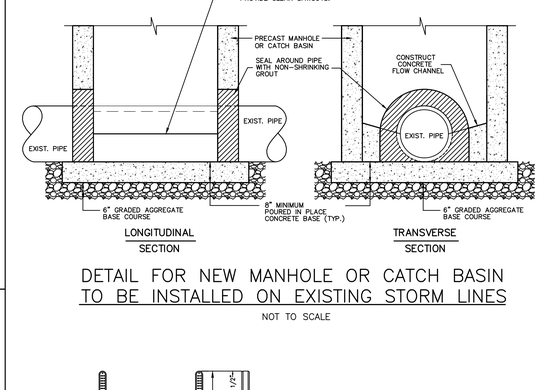

DETAIL FOR NEW MANHOLE OR CATCH BASIN TO BE INSTALLED ON EXISTING STORM LINES

NOT TO SCALE

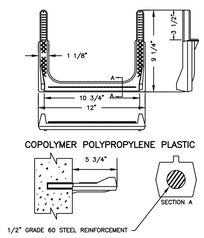

TYPICAL MANHOLE/ CATCH BASIN STEP

NOT TO SCALE

NOTES:

1. STEPS ARE REQUIRED TO BE INSTALLED IN EACH CATCH BASIN, MANHOLE OR JUNCTION BOX EXCEEDING 48" IN DEPTH MEASURED FROM THE TOP GRATE OR COVER ELEVATION TO THE CENTERLINE OF THE LOWEST PIPE.
2. THE TOP STEP SHALL BE ALIGNED SO AS TO FORM A CONTINUOUS LADDER AND BE SPACED EQUALLY AND VERTICALLY AT 12 INCH INTERVALS UNLESS OTHERWISE DIRECTED. THE BOTTOM STEP SHALL BE NO MORE THAN 23 INCHES NOR LESS THAN 13 INCHES ABOVE THE FINISHED BOTTOM OF THE UNIT EXCEPT WHERE STRUCTURALLY IMPRACTICAL.
3. THE MINIMUM CROSS SECTIONAL DIMENSION OF THE STEP SHALL BE 0.75 INCHES.

ALTERNATE: 1

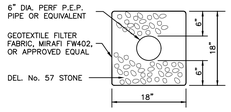

NOTE :

1. UPHILL END OF UNDERDRAIN SHALL BE CAPPED.

UNDERDRAIN DETAIL

(NO SCALE)

GENERAL CONSTRUCTION NOTES

1. ALL CONSTRUCTION METHODS AND MATERIALS SHALL BE IN ACCORDANCE WITH THE PROJECT SPECIFICATIONS, THE DELDOT STANDARD SPECIFICATIONS AND DETAILS, OR THE CITY OF WILMINGTON SPECIFICATIONS AND DETAILS, EXCEPT AS NOTED ON THIS PLAN.
2. ALL EXCESS EXCAVATION AND ALL OLD PAVEMENT, BASE COURSE, BROKEN CONCRETE, ETC. SHALL BECOME THE PROPERTY OF THE CONTRACTOR AND SHALL BE HAULED AWAY FROM THE SITE, UNLESS OTHERWISE APPROVED BY THE ENGINEER.
3. IN ALL AREAS WHERE ROCK OR OTHER UNSUITABLE MATERIALS ARE ENCOUNTERED, AS DETERMINED BY THE ENGINEER, THE CONTRACTOR SHALL REMOVE ALL SAID MATERIAL AND PROVIDE AND PLACE SUITABLE MATERIAL TO PROVIDE THE REQUIRED FIRM FOUNDATION FOR ALL PAVING OR OTHER CIVIL STRUCTURES IN ACCORDANCE WITH THE SPECIFICATIONS.
4. THE CONTRACTOR SHALL TAKE ALL NECESSARY PRECAUTIONS TO PROTECT ALL EXISTING UTILITIES AND MAINTAIN UNINTERRUPTED SERVICE. ANY DAMAGE DONE TO THEM DUE TO HIS NEGLIGENCE SHALL BE IMMEDIATELY AND COMPLETELY REPAIRED AT HIS EXPENSE.
5. IT SHALL BE THE CONTRACTOR'S RESPONSIBILITY TO PROTECT ALL INSTALLED PIPING UNTIL THE COMPLETION OF CONSTRUCTION OF THE PROJECT. PIPES WITH SHALLOW COVER SHALL BE PROTECTED FROM DAMAGE BY CONSTRUCTION MACHINERY WITH ADEQUATE TEMPORARY COVER.
6. NO DEBRIS OR TREE STUMPS SHALL BE BURIED ON–SITE. ALL TREES, TIMBER, STUMPS, BRUSH, RUBBISH OR OTHER MATERIAL SHALL BE REMOVED FROM THE SITE. OPEN BURNING SHALL NOT BE PERMITTED.
7. PLAN LOCATIONS AND DIMENSIONS SHALL BE STRICTLY ADHERED TO UNLESS OTHERWISE DIRECTED BY THE ENGINEER. ALL DIMENSIONS ARE TO FACE OF CURB, CENTERLINE OF UTILITY, CENTERLINE OF MANHOLE OR CATCH BASIN, OR FACE OF BUILDING UNLESS OTHERWISE NOTED. TOP OF MANHOLE ELEVATIONS ARE AT TOP OF MANHOLE FRAME AND COVER. DO NOT DETERMINE DIMENSIONS BY SCALING DRAWINGS.
8. THE CONTRACTOR SHALL BE RESPONSIBLE FOR ALL CONSTRUCTION LAYOUT.
9. THE CONTRACTOR IS RESPONSIBLE TO FIRMLY VERIFY ALL EXISTING CONDITIONS. ANY DISCREPANCIES WITHIN THE DRAWINGS, EXISTING FIELD CONDITIONS, SPECIFICATIONS, CODES OR REGULATIONS ARE TO BE BROUGHT TO THE ATTENTION OF THE ENGINEER PRIOR TO THE START OF WORK. FIELD REVISIONS REQUIRE PRIOR ENGINEERING REVIEW AND WRITTEN CONFIRMATION FROM THE OWNER.
10. ALL MATERIAL STORAGE SHALL BE WITHIN THE PROPERTY BOUNDARIES AND NOT ON ADJOINING PROPERTIES.
11. THE CONTRACTOR SHALL PROTECT ALL ADJOINING AND NEARBY BUILDINGS, EQUIPMENT, ALL UTILITIES, STRUCTURES, FENCES, TREES AND SHRUBBERY, ETC. FROM DAMAGE DUE TO EXCAVATION, DEMOLITION, AND CONSTRUCTION DURING THE ENTIRE CONSTRUCTION PERIOD. ANY DAMAGE CAUSED DIRECTLY OR INDIRECTLY WILL BE REPAIRED AT THE CONTRACTOR'S EXPENSE.
12. THE CONTRACTOR SHALL BE RESPONSIBLE FOR PROTECTING ALL INSTALLED PIPING UNTIL THE COMPLETION OF THE CONSTRUCTION CONTRACT. PIPES WITH SHALL COVER SHALL BE PROTECTED FROM DAMAGE BY CONSTRUCTION MACHINERY WITH ADEQUATE TEMPORARY COVER.
13. ALL DISTURBED AREAS OUTSIDE OF PAVEMENT SHALL BE TOPSOILED WITH 6" SCREENED TOPSOIL, SEEDED, AND MULCHED EXCEPT WHERE NOTED ON THE PLANS.
14. TOPSOIL SHALL BE PLACED AND FINE GRADED SO AS TO AVOID ANY INTERMEDIATE LOW AREAS. THE SEEDED AREAS SHALL BE PROTECTED FROM VEHICLE OR FOOT TRAFFIC UNTIL GRASS IS FIRMLY ESTABLISHED.
15. SEED MIXTURE SHALL BE "STADIUM TALL FESCUE MIX," AS DISTRIBUTED BY SCORE SEED COMPANY, CLAYMONT, DELAWARE, OR APPROVED EQUAL.

    30% TRIDENT TURF–TYPE TALL FESCUE
    30% FINELAWN PETITE TURF–TYPE TALL FESCUE
    30% TAHOE TURF–TYPE TALL FESCUE
    10% MOONSTRUCK KENTUCKY BLUEGRASS.

    APPLY AT A RATE OF 200 LB. PER ACRE. SEED BETWEEN AUGUST 15 AND OCTOBER 15.

    ALL SEED SHALL BE FRESH, CLEAN, FROM NEW CROP SEED, AND DELIVERED TO THE SITE IN ORIGINAL UNOPENED PACKAGES IN ACCORDANCE WITH THE DELAWARE CODE.
16. THESE DRAWINGS DO NOT INCLUDE NECESSARY COMPONENTS FOR CONSTRUCTION SAFETY. ALL CONSTRUCTION MUST BE DONE IN COMPLIANCE WITH THE OCCUPATIONAL SAFETY AND HEALTH ACT OF 1970, AS AMENDED, AND ALL RULES AND REGULATIONS THEREUNDER AND PURTENANT.
17. THE CONTRACTOR SHALL ERECT SUFFICIENT BARRICADES AND TAKE NECESSARY PRECAUTIONS TO PROTECT WORK AREAS. THE CONTRACTOR SHALL NOT DISRUPT DAILY OPERATIONS OF THE FACILITY, TRAFFIC FLOW IN THE SITE, TRAFFIC FLOW ON PUBLIC STREETS, OR EMERGENCY ACCESS TO THE SITE EXCEPT WITH THE CONCURRENCE OF THE OWNER AND THE CITY OF WILMINGTON. A DETAILED TRAFFIC MAINTENANCE PLAN SHALL BE SUBMITTED TO THE OWNER FOR APPROVAL 14 DAYS PRIOR TO BEGINNING CONSTRUCTION. MAINTENANCE OF TRAFFIC WITHIN PUBLIC RIGHTS–OF–WAY SHALL BE COORDINATED WITH AND APPROVED BY THE CITY OF WILMINGTON.
18. THE BIDDER IS REQUIRED TO EXAMINE CAREFULLY THE SITE OF THE WORK, THE PROPOSAL, PLANS, SPECIFICATIONS AND OTHER CONTRACT DOCUMENTS FOR THE WORK CONTEMPLATED AND IT WILL BE ASSUMED THAT HE HAS FAMILIARIZED AND SATISFIED HIMSELF TO THE CHARACTER, QUALITY AND QUANTITIES OF WORK TO BE PERFORMED AND MATERIALS TO BE FURNISHED, AND AS TO THE REQUIREMENTS OF THESE SPECIFICATIONS, PLANS AND OTHER CONTRACT DOCUMENTS, AND HE MUST BE PREPARED TO EXECUTE A FINISHED JOB IN EVERY PARTICULAR WITHOUT ANY EXTRA CHARGE WHATEVER, EXCEPT AS MAY BE SPECIFICALLY PROVIDED FOR ELSEWHERE IN THESE CONTRACT DOCUMENTS.
19. ALL PORTLAND CEMENT CONCRETE FOR DRAINAGE AND OTHER STRUCTURES SHALL HAVE A COMPRESSIVE STRENGTH OF 3,000 PSI AFTER 28 DAYS UNLESS OTHERWISE NOTED.

FOR EROSION CONTROL NOTES, SEE SHEET CS–101.

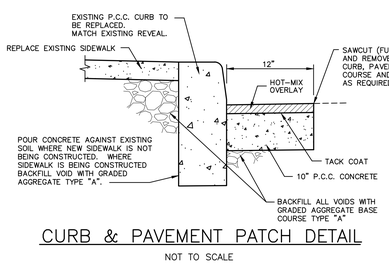

CURB & PAVEMENT PATCH DETAIL

NOT TO SCALE

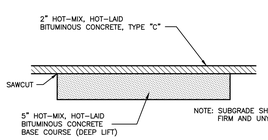

PAVEMENT PATCH DETAIL

NOT TO SCALE

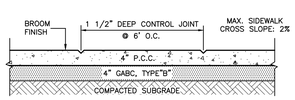

PORTLAND CEMENT CONCRETE SIDEWALK DETAIL

NOT TO SCALE

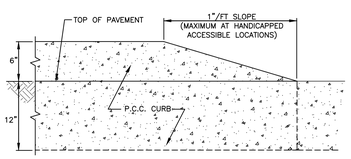

CURB TAPER TO FLUSH CURB

NOT TO SCALE

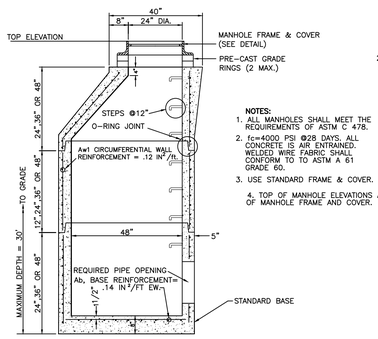

NOTES:

1. ALL MANHOLES SHALL MEET THE REQUIREMENTS OF ASTM C 478.
2. f'c=4000 PSI @28 DAYS. ALL CONCRETE IS AIR ENTRAINED. WELDED WIRE FABRIC SHALL CONFORM TO TO ASTM A 61 GRADE 60.
3. USE STANDARD FRAME & COVER.
4. TOP OF MANHOLE ELEVATIONS ARE AT TOP OF MANHOLE FRAME AND COVER.

48" DIA. PRECAST MANHOLE ASTM C 478

NOT TO SCALE

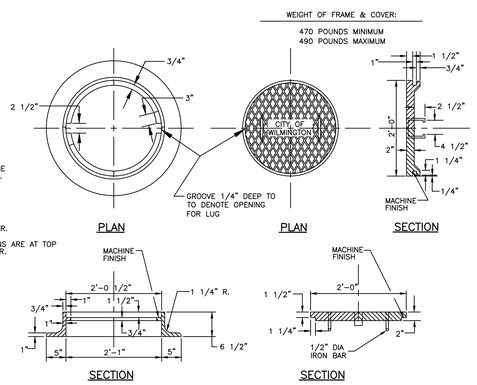

FRAME & COVER FOR STANDARD MANHOLE

NOT TO SCALE

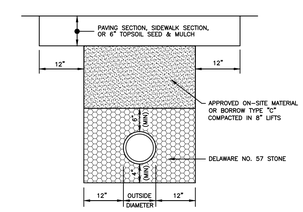

TYPICAL TRENCH DETAIL FOR PLASTIC PIPE

NOT TO SCALE

ABHA architects

1621 N. Lincoln Street
Wilmington, DE 19806
(P)302-658-6426
(F)302-658-8431
abhagen@ABHA.com
www.ABHA.com

CONSULTANTS

Vandemark & Lynch, Inc.
Civil Engineers
4305 Miller Road
Wilmington, DE 19899

PROJECT

MARGUERITE H. BURNETT MIDDLE SCHOOL DEMOLITION PROJECT

701 West 34th Street
Wilmington, Delaware 19802

OWNER

Brandywine School District

1000 Pennsylvania Avenue
Claymont, DE 19703

MARK	DATE	DESCRIPTION

PROJECT NO:	24369.00
FILE NAME	V&L NO. 24369.00–DETAIL–01
DRAWN BY:	D. SHEEKY
CHECKED BY:	S. ROSENFELD

The professional services of ABHA Architects, Inc. are undertaken for and performed in the interest of No contractual obligation is assumed by ABHA Architects, Inc. for the benefit of any other person involved in the project.

These documents are owned by ABHA Architects, Inc. and shall not be used without written permission. Copyright: ABHA Architects, Inc. © 2006

SHEET TITLE

GENERAL DETAILS

SCALE: AS SHOWN

MISS UTILITY OF DELMARVA - DELAWARE 1-800-282-8555 CALL BEFORE YOU DIG!

C-107

8 OF 10

24369.00–DETAIL–01

P:\Land Projects\24369 Burnett Elem School\Plan Prod\SC Plan\24369.00-DETAILS-01.dwg, 11/29/2017 1:15:02 PM, David J. Sheeky, VanDemark & Lynch, Inc.

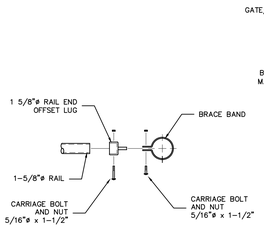

RAIL CONNECTION

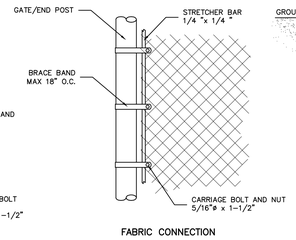

FABRIC CONNECTION

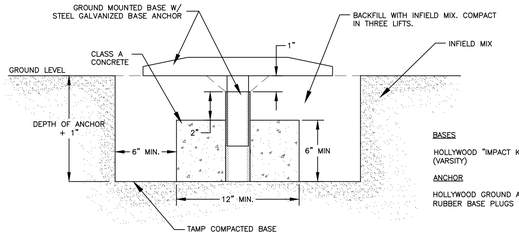

BASES

HOLLYWOOD "IMPACT KWIK RELEASE" BASE – 15"x15"x2 ½" (VARSITY)

ANCHOR

HOLLYWOOD GROUND ANCHOR (MODEL NO. BBP-44) WITH RUBBER BASE PLUGS (MODEL NO. BBP-64)

CONCRETE BASE ANCHOR DETAIL

NOT TO SCALE

PITCHING RUBBER

HOLLYWOOD PITCHING RUBBER – 24"x6"x6" (MODEL NO. BBPB)

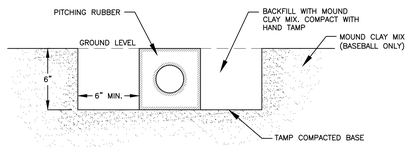

PITCHING RUBBER DETAIL

NOT TO SCALE

HOME PLATE

HOLLYWOOD "BURY ALL" HOME PLATE – (MODEL NO. SRHP)

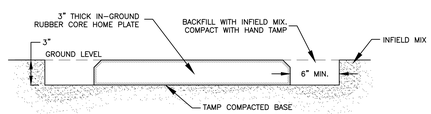

HOME PLATE DETAIL

NOT TO SCALE

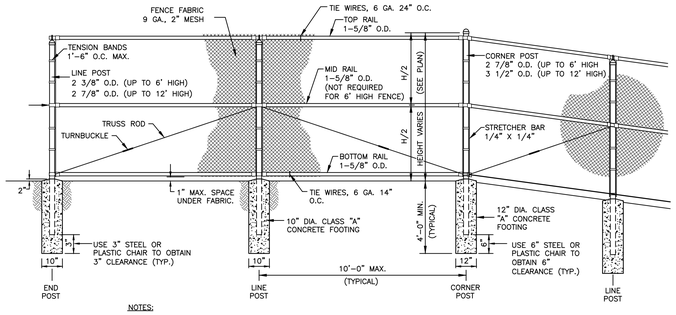

NOTES:

1. WEIGHTS OF ALL PIPE MEMBERS SHALL MEET THE MINIMUM REQUIREMENTS OF A.S.A. SCHEDULE 40.
2. ALL STEEL TO BE GALVANIZED
3. USE 6 GA 2" MESH BEHIND HOME PLATE AND IN BULLPEN.

BASEBALL/SOFTBALL CHAINLINK FENCE DETAIL

NOT TO SCALE

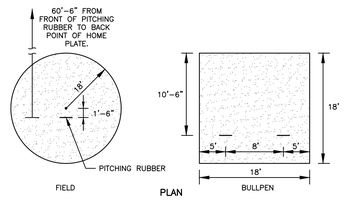

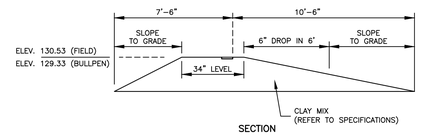

BASEBALL PITCHING MOUND

NOT TO SCALE

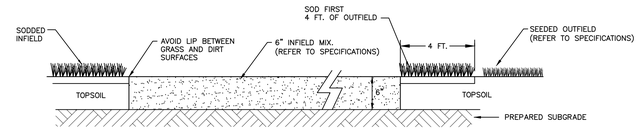

BASEBALL INFIELD DETAIL

NOT TO SCALE

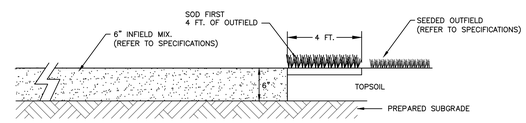

SOFTBALL INFIELD DETAIL

NOT TO SCALE

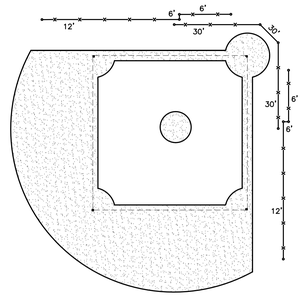

FENCE HEIGHT DIAGRAM – BASEBALL

NOT TO SCALE

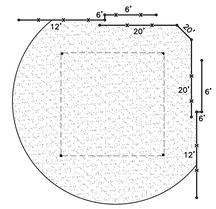

FENCE HEIGHT DIAGRAM – SOFTBALL

NOT TO SCALE

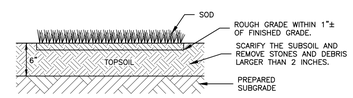

TYPICAL SOD SECTION

NOT TO SCALE

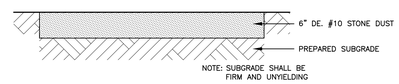

30'x6' STONE BED SECTION FOR BENCH

NOT TO SCALE

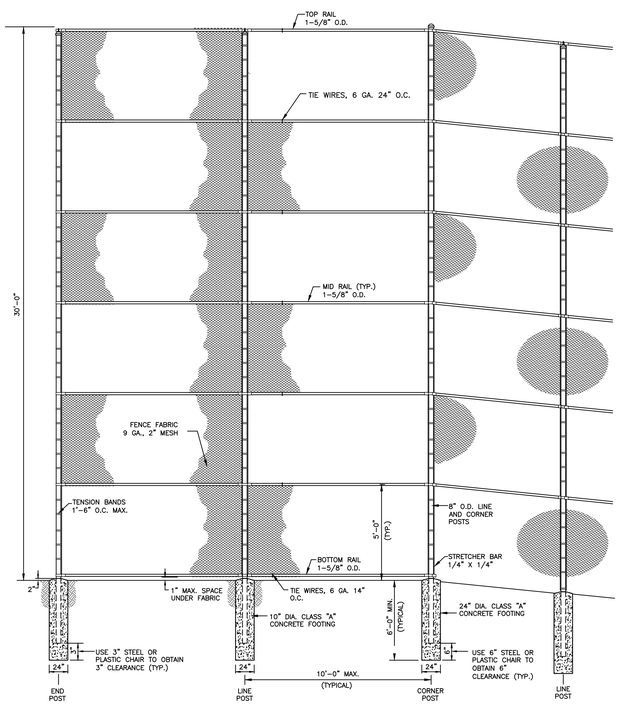

NOTES:

1. WEIGHTS OF ALL PIPE MEMBERS SHALL MEET THE MINIMUM REQUIREMENTS OF A.S.A. SCHEDULE 40.
2. ALL STEEL TO BE GALVANIZED
3. USE 6 GA 2" MESH BEHIND HOME PLATE.
4. ADD A MID RAIL 2'-6" FROM BOTTOM RAIL BEHIND HOME PLATE.
5. BACKSTOP DIAGRAM REPRESENTS MINIMUM REQUIREMENTS. CONTRACTOR TO SUBMIT DETAILED SHOP DRAWINGS FOR REVIEW.

BASEBALL BACKSTOP FENCE

NOT TO SCALE

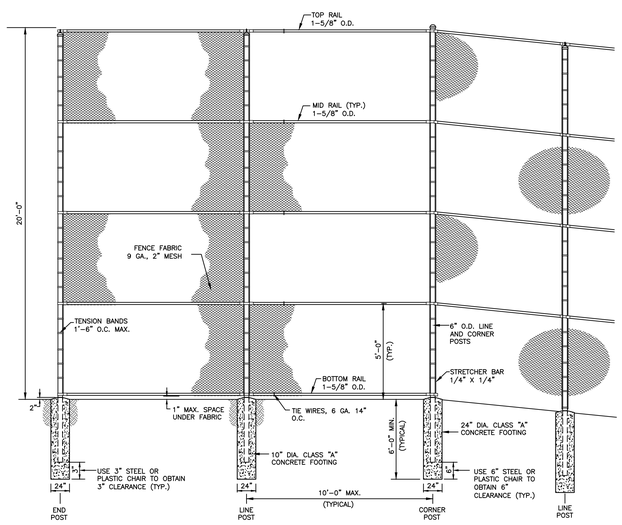

NOTES:

1. WEIGHTS OF ALL PIPE MEMBERS SHALL MEET THE MINIMUM REQUIREMENTS OF A.S.A. SCHEDULE 40.
2. ALL STEEL TO BE GALVANIZED
3. USE 6 GA 2" MESH BEHIND HOME PLATE.
4. ADD A MID RAIL 2'-6" FROM BOTTOM RAIL BEHIND HOME PLATE.
5. BACKSTOP DIAGRAM REPRESENTS MINIMUM REQUIREMENTS. CONTRACTOR TO SUBMIT DETAILED SHOP DRAWINGS FOR REVIEW.

SOFTBALL BACKSTOP FENCE

NOT TO SCALE

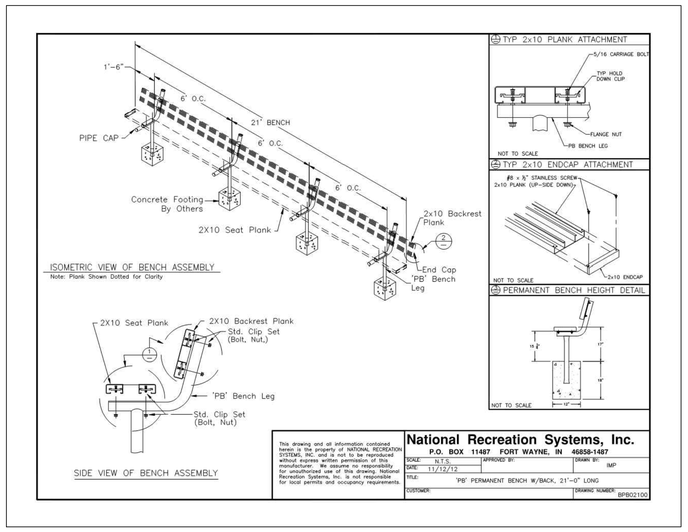

BENCH DETAIL

NOT TO SCALE

MISS UTILITY OF DELMARVA · DELAWARE
1-800-282-8555
CALL BEFORE YOU DIG!

ABHA architects

1621 N. Lincoln Street
Wilmington, DE 19806
(P)302-658-6426
(F)302-658-8431
abhagen@ABHA.com
www.ABHA.com

CONSULTANTS

Vandemark & Lynch, Inc.
Civil Engineers
4305 Miller Road
Wilmington, DE 19899

PROJECT

MARGUERITE H. BURNETT MIDDLE SCHOOL DEMOLITION PROJECT

701 West 34th Street
Wilmington, Delaware 19802

OWNER

Brandywine School District

1000 Pennsylvania Avenue
Claymont, DE 19703

MARK	DATE	DESCRIPTION

PROJECT NO:	24369.00
FILE NAME	V&L NO. 24369.00-DETAIL-01
DRAWN BY:	D. SHEEKY
CHECKED BY:	S. ROSENFELD

The professional services of ABHA Architects, Inc. are undertaken for and performed in the interest of No contractual obligation is assumed by ABHA Architects, Inc. for the benefit of any other person involved in the project.

These documents are owned by ABHA Architects, Inc. and shall not be used without written permission. Copyright: ABHA Architects, Inc. © 2006

SHEET TITLE

BASEBALL AND SOFTBALL DETAILS

SCALE: AS SHOWN

C-108

9 OF 10

24369.00-DETAIL-01

P:\Land Projects\24369 Burnett Elem School\Plan Prod\SC Plan\24369.00-DETAILS-01.dwg, 11/29/2017 1:15:12 PM, David J. Sheeky, VanDemark & Lynch, Inc.

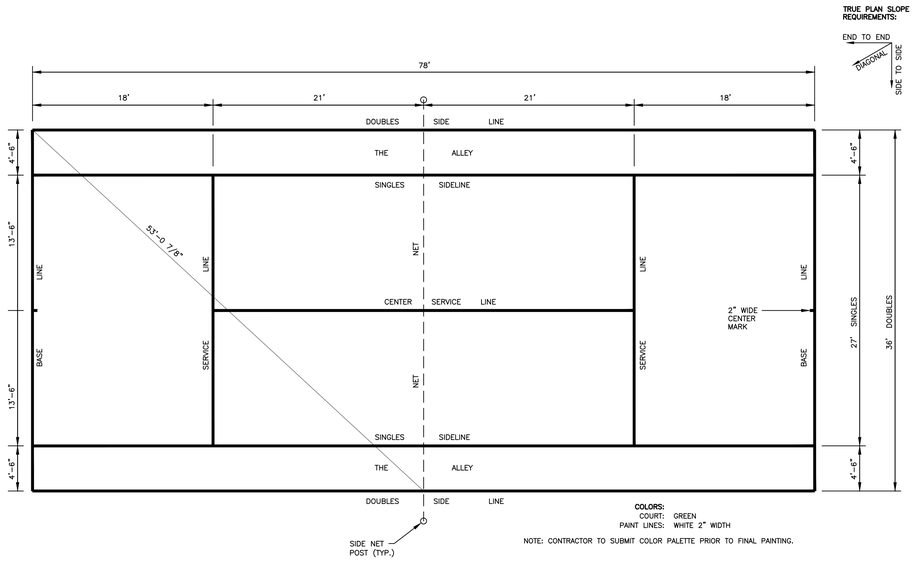

TENNIS COURT DIAGRAM

NOT TO SCALE

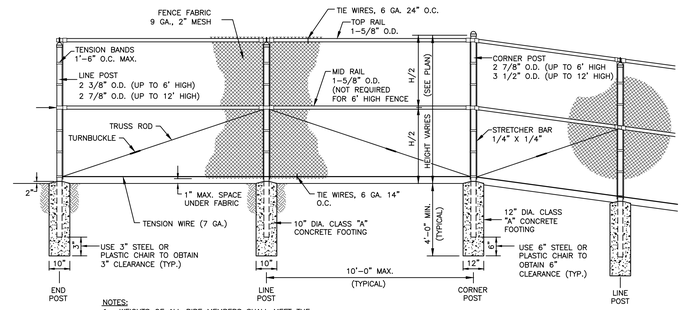

CHAINLINK FENCE DETAIL

NOT TO SCALE

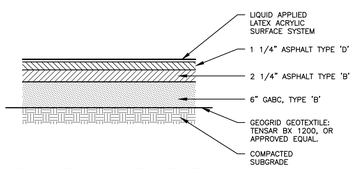

ASPHALT COURT SECTION

NOT TO SCALE

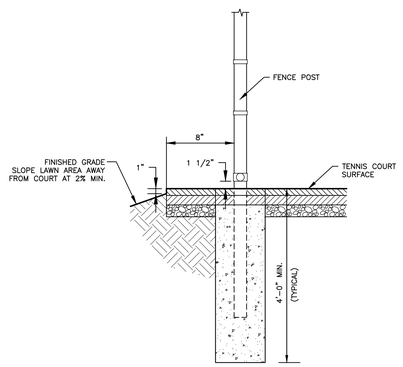

PAVING EXTENSION PAST TENNIS FENCE DETAIL

NOT TO SCALE

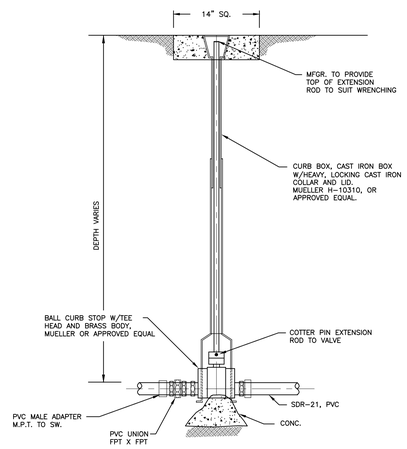

WATER VALVE & VALVE BOX DETAIL

NOT TO SCALE

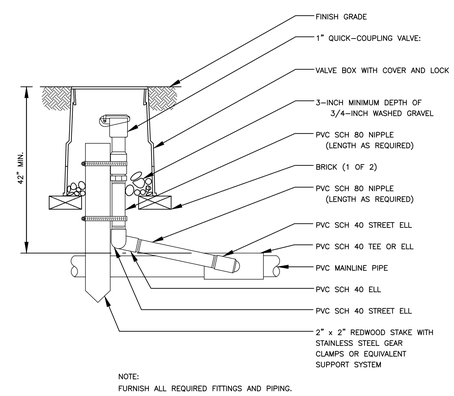

QUICK COUPLER VALVE

NOT TO SCALE

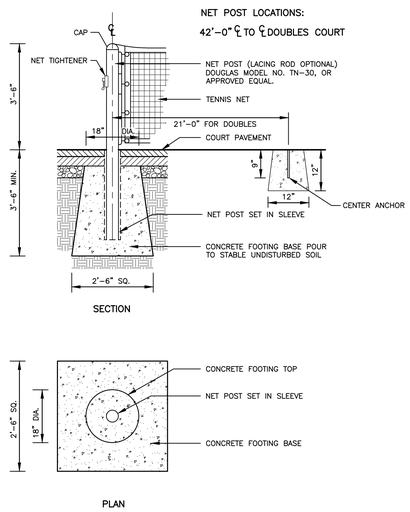

TENNIS NET POST FOOTING

NOT TO SCALE

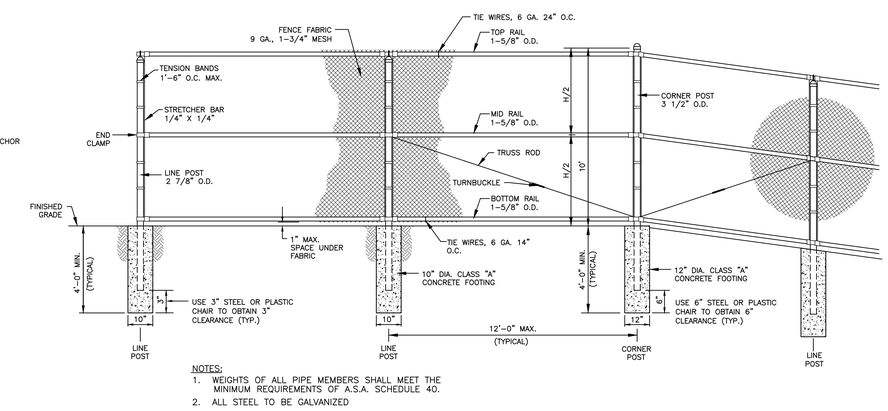

10' HIGH CHAINLINK FENCE AT TENNIS COURT DETAIL

NOT TO SCALE

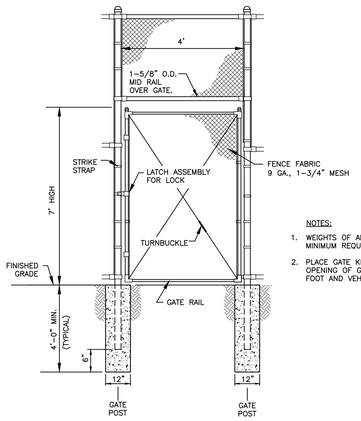

CHAINLINK GATE AT TENNIS COURT DETAIL

NOT TO SCALE

MISS UTILITY OF DELMARVA - DELAWARE
1-800-282-8555
CALL BEFORE YOU DIG!

ABHA architects
1621 N. Lincoln Street
Wilmington, DE 19806
(P)302-658-6426
(F)302-658-8431
abhagen@ABHA.com
www.ABHA.com

CONSULTANTS
Vandemark & Lynch, Inc.
Civil Engineers
4305 Miller Road
Wilmington, DE 19899

PROJECT
MARGUERITE H. BURNETT MIDDLE SCHOOL DEMOLITION PROJECT

701 West 34th Street
Wilmington, Delaware 19802

OWNER
Brandywine School District

1000 Pennsylvania Avenue
Claymont, DE 19703

MARK	DATE	DESCRIPTION

PROJECT NO:	24369.00
FILE NAME	V&L NO. 24369.00-DETAIL-01
DRAWN BY:	D. SHEEKY
CHECKED BY:	S. ROSENFELD

The professional services of ABHA Architects, Inc. are undertaken for and performed in the interest of No contractual obligation is assumed by ABHA Architects, Inc. for the benefit of any other person involved in the project.
These documents are owned by ABHA Architects, Inc. and shall not be used without written permission. Copyright ABHA Architects, Inc. © 2006

SHEET TITLE
TENNIS COURT, FENCE, AND WATER DETAILS

SCALE: AS SHOWN

C-109

10 OF 10

24369.00-DETAIL-01

P:\Land Projects\24369 Burnett Elem School\Plan Proof\SC Plan\24369.00-DETAILS-01.dwg, 11/29/2017 1:15:24 PM, David J. Sheeky, VanDemark & Lynch, Inc.