ADDENDUM NO. 2 ISSUED BY

ABHA Architects
1621 N. Lincoln Street
Wilmington, Delaware 19806

NOTICE: Attach this Addendum to the Project Manual for this project. It modifies and becomes a part of the Contract Documents. Work or materials not specifically mentioned herein are to be as described in the main body of the Specifications and as shown on the Drawings. Acknowledge receipt of the Addendum in the space provided on the Bid Form.

This Addendum includes the following (17 pages total including attachments):
CONTRACTOR QUESTIONS AND ANSWERS
CHANGES TO PROJECT MANUAL
CHANGES TO DRAWINGS

ATTACHMENTS:
SECTION 085659 – COUNTER SERVICE WINDOW UNITS – 05/17/13 - (3 pages)
SECTION 088000 – GLAZING – Revision 1 – 05/17/13 (6 pages)
DRAWINGS A-700 THROUGH A-705 (6 pages)

CONTRACTORS QUESTIONS AND ANSWERS

Q4. Can you provide a contract number for the project so that the bid bond form can be filled out properly?

A4. Use bid # 1-13-09.

CHANGES TO PROJECT MANUAL

SECTION 085659 – COUNTER SERVICE WINDOW UNITS
Add Section 085659 to the Project Manual. A copy of this section is attached to this Addendum.

SECTION 088000 – GLAZING
Delete Section 088000 – Glazing.
Replace with Section 088000 – Glazing – Revision 1 – 05/17/13, attached to this Addendum.

SECTION 230722 - GAS-FIRED INFRARED HEATERS
Page 230722-2, Paragraph 2.1.A:
Add "Reznor" as an approved manufacturer.

CHANGES TO DRAWINGS

DRAWINGS A-700 THROUGH A-705
Add Drawings A-700 through A-705, attached to this Addendum.

DRAWING FP-111
At Fire Protection Plan A1/FP-111:
Delete note: "Provide Ordinary Hazard Group 2 Coverage in Bus Repair Bay. 0.15 Density over Remote 1500 sq. ft."
Replace with: "Provide Ordinary Hazard Group 2 Coverage in Bus Repair Bay. 0.20 Density over Remote 1500 sq. ft."

At Fire Protection Plan A4/FP-111:
Delete note: "Provide Ordinary Hazard Group 2 Coverage in Bus Repair Bay. 0.15 Density over Remote 1500 sq. ft."
Replace with: "Provide Ordinary Hazard Group 2 Coverage in Bus Repair Bay. 0.20 Density over Remote 1500 sq. ft."

DRAWING E-100
At LIGHT FIXTURE SCHEDULE, Add the following equivalent Manufacturers:

- Type "L" – Atlantic Lighting
- Type "H" – Cooper Industries

END OF ADDENDUM NO. 2

SECTION 085659
COUNTER SERVICE WINDOW UNITS

PART 1 GENERAL

1.01 SECTION INCLUDES

A. Counter service window units.

B. Accessories.

1.02 RELATED REQUIREMENTS

A. Section 079005 - Joint Sealers: Perimeter sealant and back-up materials.

B. Section 081113 - Hollow metal cased opening subframe.

1.03 REFERENCE STANDARDS

A. AAMA 611 - Voluntary Specification for Anodized Architectural Aluminum; 2012.

B. ASTM B221 - Standard Specification for Aluminum and Aluminum-Alloy Extruded Bars, Rods, Wire, Profiles, and Tubes; 2012.

C. ASTM B221M - Standard Specification for Aluminum and Aluminum-Alloy Extruded Bars, Rods, Wire, Profiles, and Tubes [Metric]; 2012.

1.04 ADMINISTRATIVE REQUIREMENTS

A. Coordinate work with adjacent materials specified in other sections and as indicated on drawings and approved shop drawings.

1.05 SUBMITTALS

A. See Section 013000 - Administrative Requirements, for submittal procedures.

B. Product Data: Submit manufacturer's product data for specified products indicating materials, operation, glazing, finishes, and installation instructions.

C. Shop Drawings: Indicate configuration, sizes, rough-in, mounting, anchors and fasteners, and installation clearances.

1.06 DELIVERY, STORAGE, AND HANDLING

A. Deliver units in manufacturer's original packaging and unopened containers with identification labels intact.

B. Store units in area protected from exposure to weather and vandalism.

PART 2 PRODUCTS

2.01 SERVICE COUNTER WINDOW UNITS

A. Pass-Through Window:
   1. Location: Interior.
   2. Window: dual horizontal sliding, with center fixed window .
      a. Operation: Manual.
      b. Mounting: top-hung, center mount in hollow metal cased opening subframe. .
      c. Size: As indicated on drawings.
      d. Finish: Natural anodized.
      e. Finish Color: As selected from manufacturer's standard colors.
   3. Glazing: Single (monolithic), clear.
      a. Tempered safety glazing.

4. Products:
   a. Nissen & Company, Inc.; Series 'H' Window, without screens: <www.nissenco.com>.
   b. Substitutions: See Section 016000 - Product Requirements.

2.02 COMPONENTS

A. Windows: Factory-fabricated, -finished, and -glazed, extruded aluminum frame and glazing stops; complete with hardware and anchors.
   1. Rigidly fit and secure joints and corners with internal reinforcement. Make joints and connections flush, hairline, and weatherproof. Fully weld corners.
   2. Apply factory finish to all exposed surfaces.

2.03 MATERIALS

A. Aluminum Extrusions: Minimum 0.125 inch (3.2 mm) thick frame and sash material complying with ASTM B221 and ASTM B221M.
   1. Anodized Aluminum Surfaces: Clear Architectural Class II, minimum 0.7 mils (0.018 mm) medium matte chemical finish, conforming to AAMA 611.

B. Monolithic Glass: Fully tempered float glass; minimum 1/4 inch (6.35 mm) thickness.

2.04 ACCESSORIES

A. Hardware for Sliding Windows:
   1. Locks: manufacturer's standard sliding bolt lock.
   2. Counter seal: brush type wool pile.
   3. Bottom guide: manufacturer's standard.

PART 3 EXECUTION

3.01 EXAMINATION

A. Verify that window openings are ready for installation of windows.

B. Verify that correct embedded anchors are in place and in proper location; repair or replace anchors as required to achieve satisfactory installation.

C. Notify Architect if conditions are not suitable for installation of units; do not proceed until conditions are satisfactory.

3.02 INSTALLATION

A. Install in accordance with manufacturer's instructions.

B. Install units in correct orientation (inside/outside or secure/non-secure).

C. Seal perimeter joints as specified in Section 079005.

3.03 ADJUSTING

A. Adjust operating components for smooth operation while also maintaining a secure, tight fit at the contact points; lubricate operating hardware.

3.04 CLEANING AND PROTECTION

A. Remove protective material from factory finished surfaces.

B. Clean exposed surfaces promptly after installation without damaging finishes.

C. Remove and replace defective work.

D. Provide temporary protection to ensure that security windows are without damage at time of Substantial Completion.

3.05 SCHEDULE

A. Locations:
   1. Room 109 Dispatch Counter.

END OF SECTION

SECTION 088000
GLAZING

PART 1 GENERAL

1.01 SECTION INCLUDES

A. Glass.

B. Glazing compounds and accessories.

1.02 RELATED REQUIREMENTS

A. Section 079005 - Joint Sealers: Sealant and back-up material.

B. Section 081114 - Hollow Metal Doors and Frames: Glazed doors, and borrowed lites.

C. Section 081416 - Flush Wood Doors: Glazed lites in doors.

D. Section 085413 - Fiberglass Windows: Glazing furnished by window manufacturer.

1.03 REFERENCE STANDARDS

A. 16 CFR 1201 - Safety Standard for Architectural Glazing Materials; current edition.

B. ANSI Z97.1 - American National Standard for Safety Glazing Materials Used in Buildings, Safety Performance Specifications and Methods of Test; 2010.

C. ASCE 7 - Minimum Design Loads for Buildings and Other Structures; 2011.

D. ASTM C864 - Standard Specification for Dense Elastomeric Compression Seal Gaskets, Setting Blocks, and Spacers; 2005 (Reapproved 2011).

E. ASTM C920 - Standard Specification for Elastomeric Joint Sealants; 2011.

F. ASTM C1036 - Standard Specification for Flat Glass; 2011e1.

G. ASTM C1048 - Standard Specification for Heat-Treated Flat Glass--Kind HS, Kind FT Coated and Uncoated Glass; 2012.

H. ASTM C1172 - Standard Specification for Laminated Architectural Flat Glass; 2009e1.

I. ASTM C1193 - Standard Guide for Use of Joint Sealants; 2011a.

J. ASTM E1300 - Standard Practice for Determining Load Resistance of Glass in Buildings; 2012a.

K. ASTM E2190 - Standard Specification for Insulating Glass Unit Performance and Evaluation; 2010.

L. GANA (GM) - GANA Glazing Manual; Glass Association of North America; 2009.

M. GANA (SM) - GANA Sealant Manual; Glass Association of North America; 2008.

N. SIGMA TM-3000 - Glazing Guidelines for Sealed Insulating Glass Units; Sealed Insulating Glass Manufacturers Association; 2004.

1.04 SUBMITTALS

A. See Section 013000 - Administrative Requirements, for submittal procedures.

B. Product Data on Glass Types: Provide structural, physical and environmental characteristics, size limitations, special handling or installation requirements.

C. Product Data on Glazing Compounds: Provide chemical, functional, and environmental characteristics, limitations, special application requirements. Identify available colors.

D. Certificates: Certify that products meet or exceed specified requirements.

1.05 QUALITY ASSURANCE

A. Perform Work in accordance with GANA Glazing Manual and FGMA Sealant Manual for glazing installation methods.

B. Installer Qualifications: Company specializing in performing the work of this section with minimum five years documented experience.

1.06 FIELD CONDITIONS

A. Do not install glazing when ambient temperature is less than 50 degrees F (10 degrees C).

B. Maintain minimum ambient temperature before, during and 24 hours after installation of glazing compounds.

1.07 WARRANTY

A. See Section 017800 - Closeout Submittals, for additional warranty requirements.

B. Sealed Insulating Glass Units: Provide a ten (10) year warranty to include coverage for seal failure, interpane dusting or misting, including replacement of failed units.

C. Laminated Glass: Provide a ten (10) year warranty to include coverage for delamination, including replacement of failed units.

PART 2 PRODUCTS

2.01 GLAZING TYPES

A. Type 1 - Sealed Insulating Glass Units: Vision glazing, low-E.
   1. Application(s): All exterior glazing unless otherwise indicated.
   2. Substitutions: Refer to Section 016000 - Product Requirements.
   3. Between-lite space filled with argon.
   4. Thermal Resistance (U-Value): 0.26, nominal.
   5. Total Solar Heat Gain Coefficient: 0.27, nominal.
   6. Total Visible Light Transmittance: 64 percent.
   7. Basis of Design: PPG Industries, Inc: www.ppgideascapes.com.
      a. Other approved manufacturers: Guardian Sunguard SN68
   8. Outboard Lite: Annealed float glass, 1/4 inch (6 mm) thick, minimum.
      a. Coating: PPG Sungate 500 on #2 surface, no coating on #3 surface.
      b. Tint: None (clear).
   9. Inboard Lite: Annealed float glass, 1/4 inch (6 mm) thick.
      a. Tint: None (clear).
   10. Total Thickness: 1 inch (25 mm).

B. Type 1A - Sealed Insulating Glass Units: Safety glazing:
   1. Applications: Provide this type of glazing in the following locations:
      a. Glazed lites in exterior doors.
      b. Glazed sidelights and panels next to doors.
      c. Windows and storefront that extend to below 18" above finished floor.
      d. Other locations required by applicable federal, state, and local codes and regulations.
      e. Other locations indicated on the drawings.

2. Type: Same as Type 1 except use fully tempered float glass for both outboard and inboard lites.

C. Type 2 - NOT USED.

D. Type 3 - Single Safety Glazing: Non-fire-rated.
1. Applications: Provide this type of glazing in the following locations:
a. Glazed lites in doors, except fire doors.
b. Glazed sidelights to doors, except in fire-rated walls and partitions.
c. Other locations required by applicable federal, state, and local codes and regulations.
d. Other locations indicated on the drawings.
2. Type: Laminated safety glass as specified.
3. Tint: Clear.
4. Thickness: 1/4 inch (6 mm).

E. Type 4 - NOT USED.

F. Type 5 - Single Vision Glazing:
1. Applications: All interior glazing unless otherwise indicated.
2. Type: Annealed float glass.
3. Tint: Clear.
4. Thickness: 1/4 inch (6 mm).

2.02 EXTERIOR GLAZING ASSEMBLIES

A. Structural Design Criteria: Select type and thickness to withstand dead loads and wind loads acting normal to plane of glass at design pressures calculated in accordance with ASCE 7.
1. Use the procedure specified in ASTM E1300 to determine glass type and thickness.
2. Limit glass deflection to 1/200 or flexure limit of glass, whichever is less, with full recovery of glazing materials.
3. Thicknesses listed are minimum.

B. Air and Vapor Seals: Provide completed assemblies that maintain continuity of building enclosure vapor retarder and air barrier:
1. In conjunction with vapor retarder and joint sealer materials described in other sections.
2. To maintain a continuous air barrier and vapor retarder throughout the glazed assembly from glass pane to heel bead of glazing sealant.

2.03 GLASS MATERIALS

A. Float Glass Manufacturers:
1. AGC Flat Glass North America, Inc: www.na.agc-flatglass.com.
2. Guardian Industries Corp: www.sunguardglass.com.
3. Pilkington North America Inc: www.pilkington.com/na.
4. PPG Industries, Inc: www.ppgideascapes.com.
5. Substitutions: Refer to Section 016000 - Product Requirements.

B. Float Glass: All glazing is to be float glass unless otherwise indicated.
1. Annealed Type: ASTM C1036, Type I, transparent flat, Class 1 clear, Quality Q3 (glazing select).
2. Heat-Strengthened and Fully Tempered Types: ASTM C1048.

3. Tinted Types: Color and performance characteristics as indicated.
4. Thicknesses: As indicated; for exterior glazing comply with specified requirements for wind load design regardless of specified thickness.

C. Laminated Glass: Float glass laminated in accordance with ASTM C1172.
1. Laminated Safety Glass: Comply with 16 CFR 1201 test requirements for Category II.
2. Plastic Interlayer: 0.060 inch (1.52 mm) thick, minimum.
3. Where fully tempered is specified or required, provide glass that has been tempered by the tong-less horizontal method.

2.04 SEALED INSULATING GLASS UNITS

A. Manufacturers:
1. Any fabricator certified by glass manufacturer for type of glass, coating, and treatment involved and capable of providing specified warranty, if any.
2. Substitutions: Refer to Section 016000 - Product Requirements.

B. Sealed Insulating Glass Units: Types as indicated.
1. Durability: Certified by an independent testing agency to comply with ASTM E2190.
2. Edge Spacers: Aluminum, bent and soldered corners.
3. Edge Seal: Glass to elastomer with supplementary silicone sealant.
4. Purge interpane space with dry hermetic air.

2.05 GLAZING COMPOUNDS

A. Glazing Putty : Polymer modified latex , knife grade consistency; grey color.

B. Polysulfide Sealant : Two component; chemical curing, non-sagging type; ASTM C 920, Type M, Grade NS, Class 25, Uses M, A, and G; cured Shore A hardness of 15 to 25; color as selected.

C. Silicone Sealant : Single component; neutral curing; capable of water immersion without loss of properties; non-bleeding, non-staining; ASTM C 920, Type S, Grade NS, Class 25, Uses M, A, and G; cured Shore A hardness of 15 to 25; color as selected.

2.06 GLAZING ACCESSORIES

A. Setting Blocks: Neoprene, EPDM, or Silicone, 80 to 90 Shore A durometer hardness, ASTM C864 Option I. Length of 0.1 inch for each square foot (25 mm for each square meter) of glazing or minimum 4 inch (100 mm) x width of glazing rabbet space minus 1/16 inch (1.5 mm) x height to suit glazing method and pane weight and area.

B. Spacer Shims: Neoprene, 50 to 60 Shore A durometer hardness, ASTM C 864 Option I. Minimum 3 inch (75 mm) long x one half the height of the glazing stop x thickness to suit application, self adhesive on one face.

C. Glazing Tape: Preformed butyl compound with integral resilient tube spacing device; 10 to 15 Shore A durometer hardness; coiled on release paper; black color.

D. Glazing Splines: Resilient polyvinyl chloride extruded shape to suit glazing channel retaining slot; ASTM C864 Option I; color to match framing.

E. Glazing Clips: Manufacturer's standard type.

PART 3 EXECUTION

3.01 EXAMINATION

A. Verify that openings for glazing are correctly sized and within tolerance.

B. Verify that surfaces of glazing channels or recesses are clean, free of obstructions that may impede moisture movement, weeps are clear, and ready to receive glazing.

3.02 PREPARATION

A. Prime surfaces scheduled to receive sealant.

B. Install sealants in accordance with ASTM C1193 and GANA Sealant Manual.

C. Install sealant in accordance with manufacturer's instructions.

3.03 GENERAL

A. Manufacturer's Instructions: Follow in executing all glazing work.

B. Sizing: Obtain final sizes for all glass by job measurement.

C. Preparation: Check all openings prior to glazing to ascertain that opening is square, plumb and secure. Clean all surfaces that will receive glazing materials with cleaner as recommended by manufacturer; wipe dry.

D. Windows: Install spacers, shims and setting blocks as recommended by glass manufacturer. Install sealants, glazing tape, vision strips, etc., as recommended by glass manufacturer.

3.04 INSTALLATION

A. Comply with referenced FGMA standards and instructions of manufacturers of glass, glazing sealants, and glazing compounds.

B. Protect glass from edge damage during handling and installation. Inspect glass during installation and discard pieces with edge damage that could affect glass performance.

C. Set units of glass in each series with uniformity of pattern, draw, bow, and similar characteristics.

D. Cut glazing tape to length and set against permanent stops, flush with sight lines to fit openings exactly, with stretch allowance during installation.

E. Place setting blocks located at quarter points of glass with edge block no more than 6 inches from corners.

F. Place glazing tape on free perimeter of glazing in same manner described above.

G. Install removable stop and secure without displacement of tape.

H. Use specified glazing compound, without adulteration; bed glazing material in glazing compound; entirely fill all recess and spaces. Provide visible glazing compound with smooth and straight edges.

I. Install so that appropriate markings remain permanently visible.

J. Follow glazing size limits, stop size per manufacturer recommendations.

3.05 INSTALLATION - EXTERIOR/INTERIOR DRY METHOD (GASKET GLAZING)

A. Place setting blocks at 1/4 points with edge block no more than 6 inches (150 mm) from corners.

B. Rest glazing on setting blocks and push against fixed stop with sufficient pressure on gasket to attain full contact.

C. Install removable stops without displacing glazing gasket; exert pressure for full continuous contact.

3.06 INSTALLATION - INTERIOR WET/DRY METHOD (TAPE AND SEALANT)

A. Cut glazing tape to length and install against permanent stops, projecting 1/16 inch (1.6 mm) above sight line.

B. Place setting blocks at 1/4 points with edge block no more than 6 inches (150 mm) from corners.

C. Rest glazing on setting blocks and push against tape to ensure full contact at perimeter of pane or unit.

D. Install removable stops, spacer shims inserted between glazing and applied stops at 24 inch (600 mm) intervals, 1/4 inch (6 mm) below sight line.

E. Fill gaps between pane and applied stop with butyl type sealant to depth equal to bite on glazing, to uniform and level line.

F. Trim protruding tape edge.

3.07 LABELING

A. Each piece of safety-rated glazing shall be permanently labeled with the appropriate manufacturer's logo and safety rating.

END OF SECTION

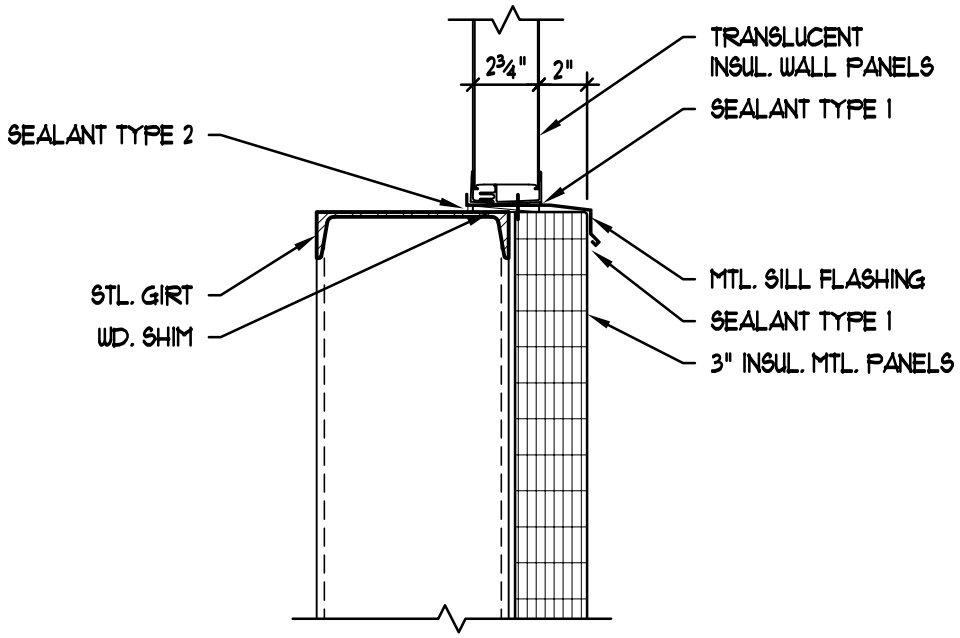

B1 SILL DETAIL

SCALE: 1½" = 1'-0"

NOTES :

1. TYPICAL SILL DETAIL FOR TRANSLUCENT INSULATED WALL PANELS AT NEW ADDITION.
2. ADD TO SHHEET A-601.

ABHA architects
1621 N. Lincoln Street
Wilmington, DE 19806
(P)302-658-6426
(F)302-658-8431

abhagen@ABHA.com
www.ABHA.com

REV:	
ISSUE:	05/17/13
PROJECT NO:	1228
FILE NAME:	1228-A601.dwg
DRAWN BY:	TJH
CHECKED BY:	SRL

SHEET TITLE
SILL DETAIL B1/A-601

PROJECT
BRANDYWINE SCHOOL DISTRICT – TRANSPORTATION CENTER

CONSULTANT

A-700

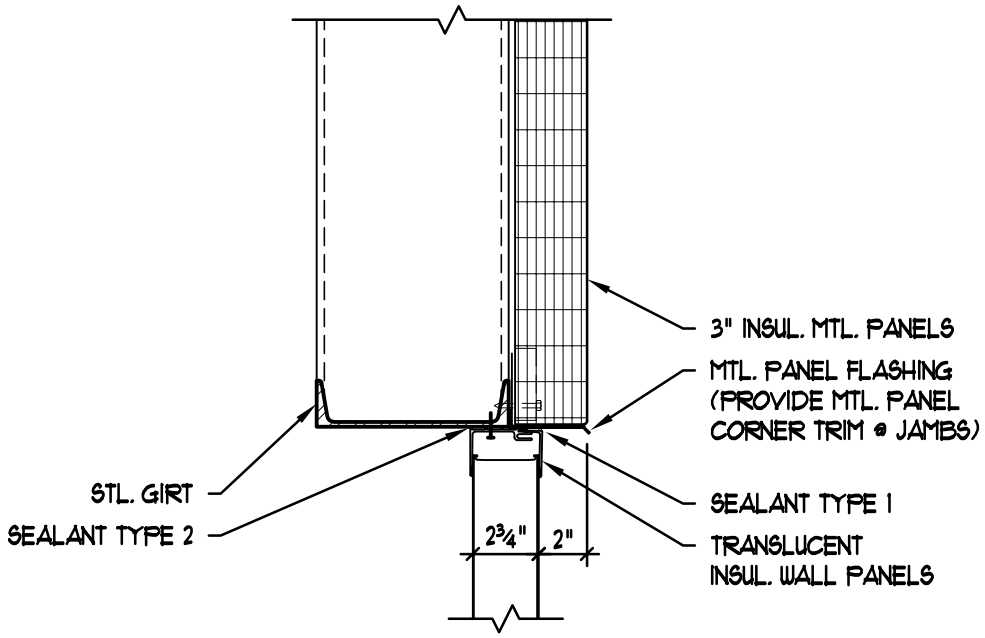

C2 HEAD DETAIL (JAMB SIM.)

SCALE: 1½" = 1'-0"

NOTES :

1. TYPICAL HEAD/JAMB DETAIL FOR TRANSLUCENT INSULATED WALL PANELS AT NEW ADDITION.

2. ADD TO SHHEET A-601.

ABHA architects
1621 N. Lincoln Street
Wilmington, DE 19806
(P)302-658-6426
(F)302-658-8431

abhagen@ABHA.com
www.ABHA.com

REV:	
ISSUE:	05/17/13
PROJECT NO:	1228
FILE NAME:	1228-A601.dwg
DRAWN BY:	TJH
CHECKED BY:	SRL

SHEET TITLE
HEAD DETAIL C2/A-601

PROJECT
BRANDYWINE SCHOOL DISTRICT – TRANSPORTATION CENTER

CONSULTANT

A-701

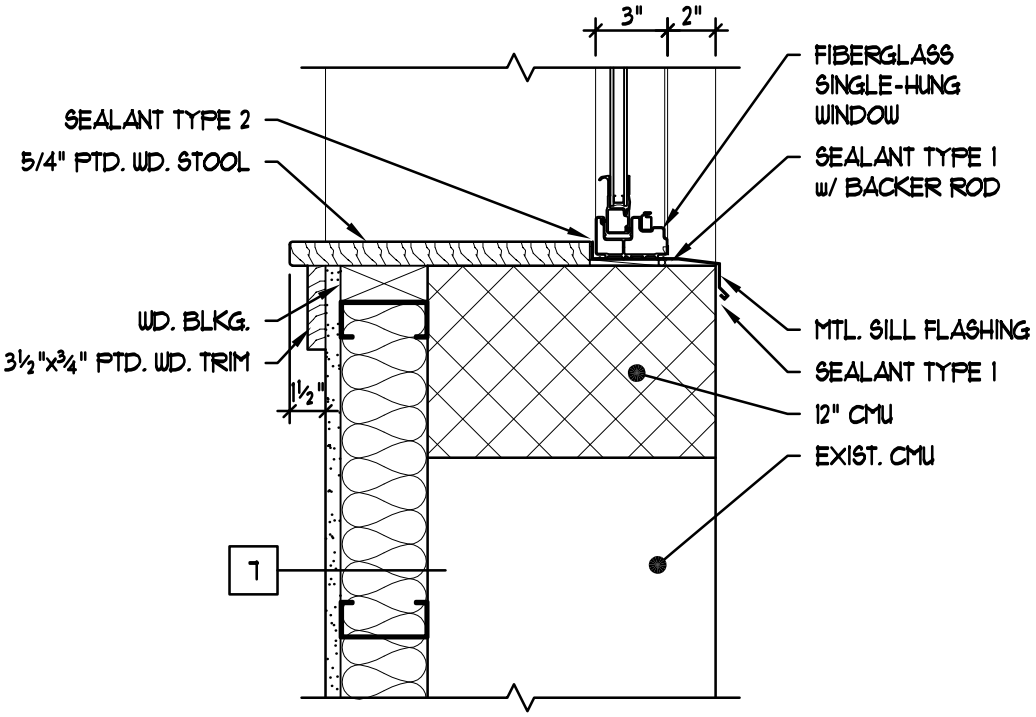

B3 SILL DETAIL

SCALE: 1½" = 1'-0"

NOTES :

1. TYPICAL SILL DETAIL FOR NEW FIBERGLASS WINDOWS AT EXISTING BUILDING
2. ADD TO SHHEET A-601.

ABHA architects

1621 N. Lincoln Street
Wilmington, DE 19806
(P)302-658-6426
(F)302-658-8431

abhagen@ABHA.com
www.ABHA.com

REV:	
ISSUE:	05/17/13
PROJECT NO:	1228
FILE NAME:	1228-A601.dwg
DRAWN BY:	TJH
CHECKED BY:	SRL

SHEET TITLE

SILL DETAIL B3/A-601

PROJECT

BRANDYWINE SCHOOL DISTRICT – TRANSPORTATION CENTER

CONSULTANT

A-702

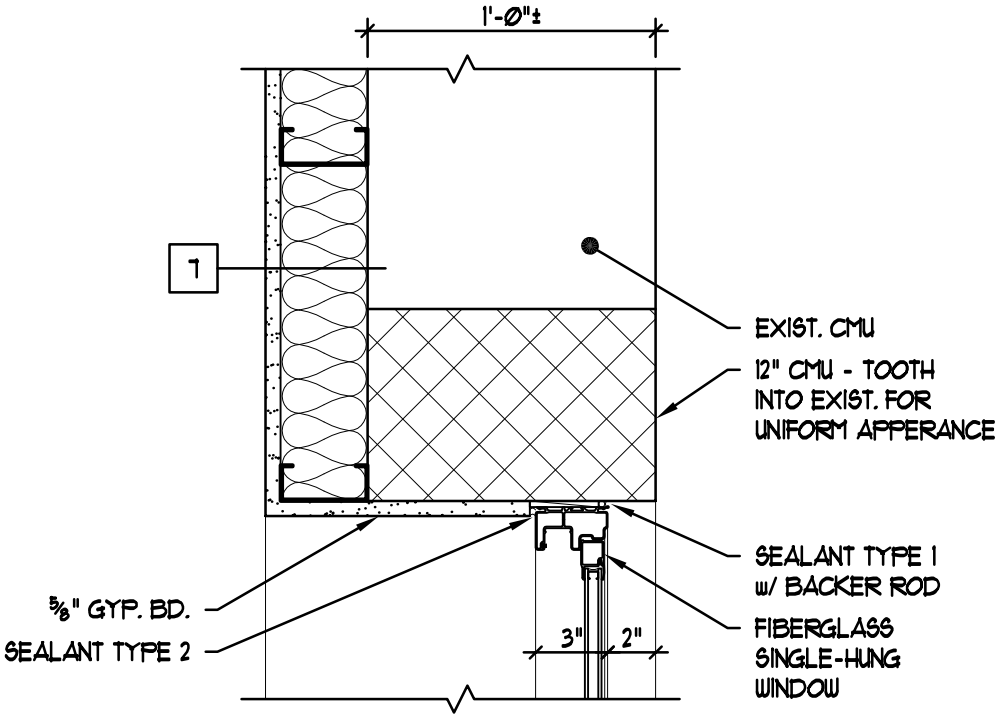

C3 JAMB DETAIL

SCALE: 1½" = 1'-0"

NOTES :

1. TYPICAL JAMB DETAIL FOR NEW FIBERGLASS WINDOWS AT EXISTING BUILDING.
2. ADD TO SHHEET A-601.

ABHA architects

1621 N. Lincoln Street
Wilmington, DE 19806
(P)302-658-6426
(F)302-658-8431

abhagen@ABHA.com
www.ABHA.com

REV:	
ISSUE:	05/17/13
PROJECT NO:	1228
FILE NAME:	1228-A601.dwg
DRAWN BY:	TJH
CHECKED BY:	SRL

SHEET TITLE
JAMB DETAIL C3/A-601

PROJECT
BRANDYWINE SCHOOL DISTRICT – TRANSPORTATION CENTER

CONSULTANT

A-703

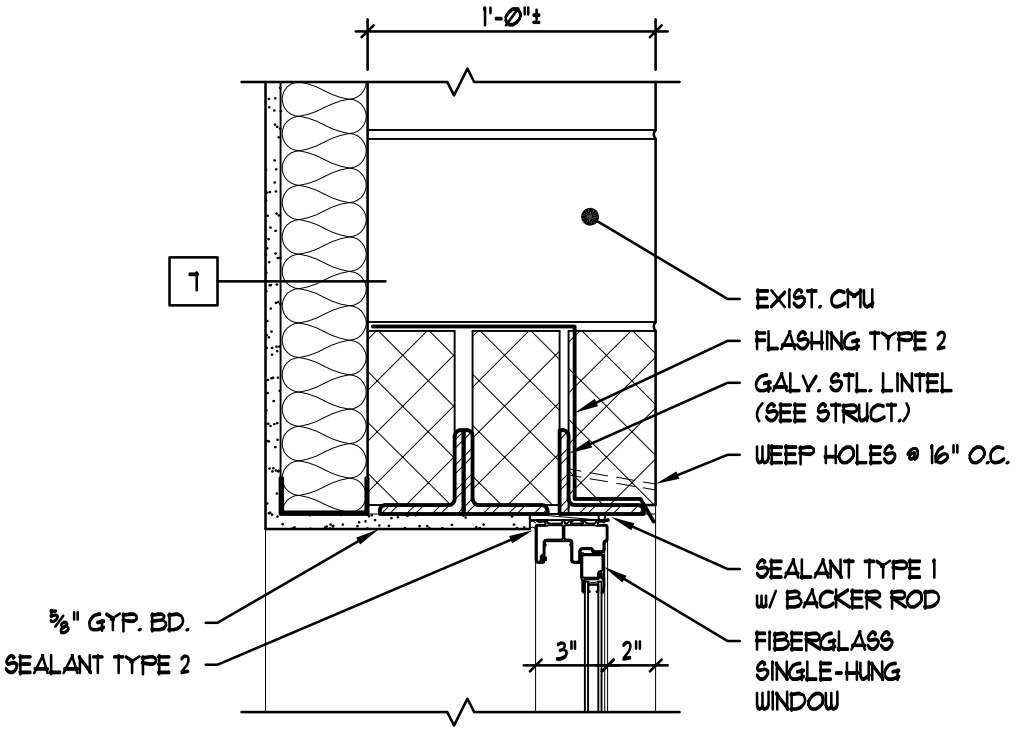

D3 HEAD DETAIL

SCALE: 1½" = 1'-0"

NOTES :

1. TYPICAL HEAD DETAIL FOR NEW FIBERGLASS WINDOWS AT EXISTING BUILDING.
2. ADD TO SHHEET A-601.

ABHA architects
1621 N. Lincoln Street
Wilmington, DE 19806
(P)302-658-6426
(F)302-658-8431
abhagen@ABHA.com
www.ABHA.com

REV:	
ISSUE:	05/17/13
PROJECT NO:	1228
FILE NAME:	1228-A601.dwg
DRAWN BY:	TJH
CHECKED BY:	SRL

SHEET TITLE
HEAD DETAIL D3/A-601

PROJECT
BRANDYWINE SCHOOL DISTRICT – TRANSPORTATION CENTER

CONSULTANT

A-704

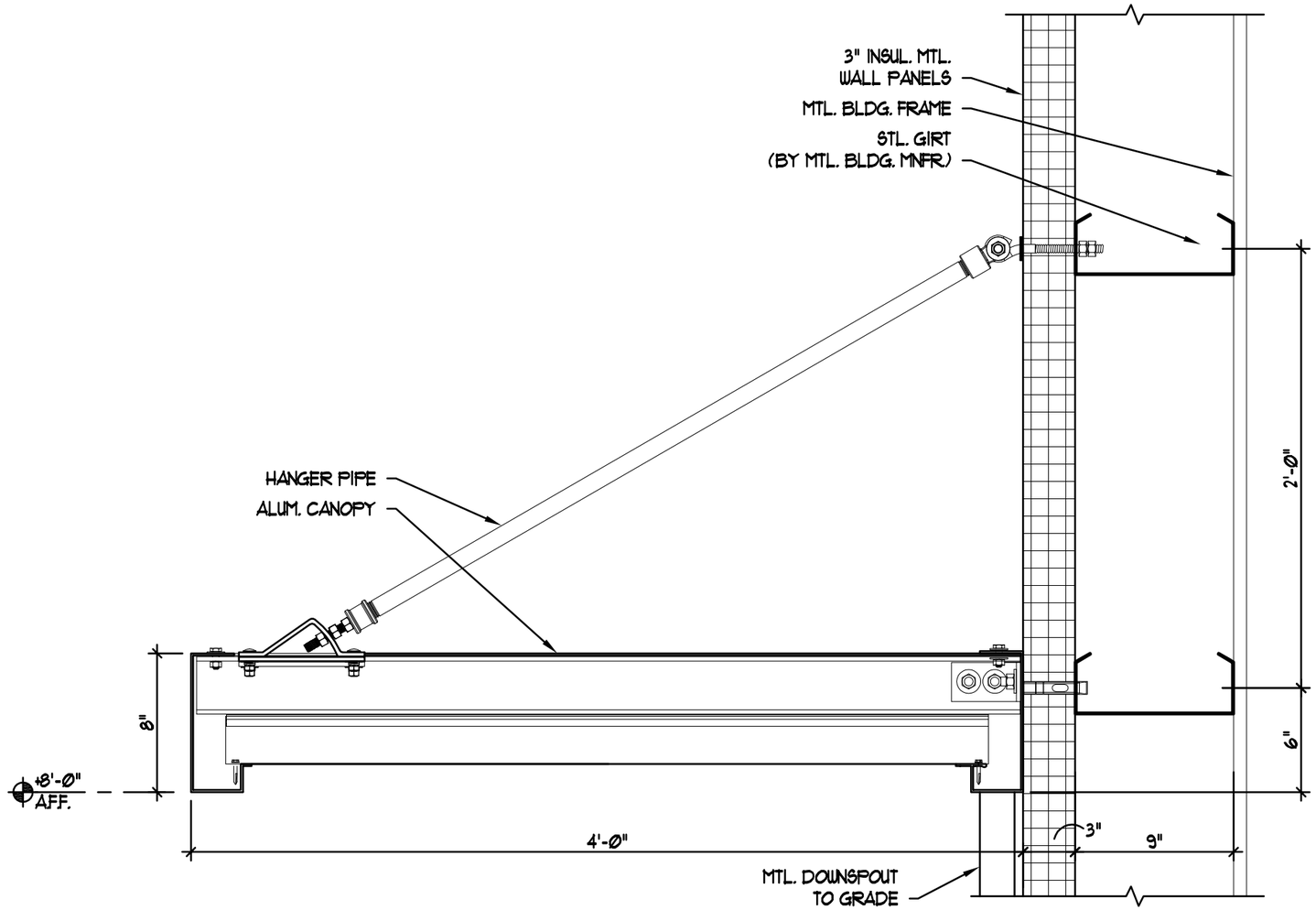

D3 CANOPY DETAIL

SCALE: 1½" = 1'-Ø"

NOTES :

1. TYPICAL FOR ALUMINUM CANOPY AT NEW ADDITION.
2. CANOPIES AT EXISTING BUILDING ARE SIMILAR. PROVIDE EYE BOLTS THRU BOLTED AT EXISTING CMU. GROUT CORES SOLID AT BOLT LOCATIONS.
3. ADD TO SHEET A-311.

ABHA architects
1621 N. Lincoln Street
Wilmington, DE 19806
(P)302-658-6426
(F)302-658-8431
abhagen@ABHA.com
www.ABHA.com

REV:	
ISSUE:	05/17/13
PROJECT NO:	1228
FILE NAME:	1228–A300.dwg
DRAWN BY:	TJH
CHECKED BY:	SRL

SHEET TITLE
CANOPY DETAIL D3/A–311

PROJECT
BRANDYWINE SCHOOL DISTRICT –
TRANSPORTATION CENTER

CONSULTANT

A-705