PROJECT NUMBER: ASD21002-MHSTURFREN
INDEX PLAN
MIDDLETOWN HIGH SCHOOL

APPOQUINIMINK SCHOOL DISTRICT
TURF FIELD PROJECT

NEW CASTLE COUNTY
DELAWARE

SITE DATA

1. TAX PARCEL NUMBER:
2. TOPOGRAPHIC SURVEY:

   FIELD SURVEY BY LANDMARK ENGINEERING, INC.
3. POSTAL ADDRESS:

GENERAL CONSTRUCTION NOTES

1. ALL EROSION AND SEDIMENT CONTROL MEASURES SHALL BE IN ACCORDANCE WITH THE DELAWARE EROSION AND SEDIMENT CONTROL HANDBOOK (2004).

2. PLAN LOCATIONS AND DIMENSIONS SHALL BE STRICTLY ADHERED TO, UNLESS OTHERWISE DIRECTED BY THE ENGINEER.

3. THE CONTRACTOR SHALL NOTIFY MISS UTILITY AT 1-800-282-8555 A MINIMUM OF 72 HOURS PRIOR TO EXCAVATION OR CONSTRUCTION.

4. LANDMARK ENGINEERING, INC. MAKES NO GUARANTEE AS TO THE EXISTENCE OR NON-EXISTENCE, LOCATION, DEPTH, SIZE OR CONDITION OF ANY UNDERGROUND UTILITIES SHOWN ON THIS PLAN NOT ACCESSIBLE FROM THE SURFACE OF THE GROUND. EXISTING UTILITIES ARE SHOWN IN ACCORDANCE WITH INFORMATION PROVIDED BY THE RESPECTIVE UTILITY COMPANIES AT THE TIME THE PLAN WAS PREPARED. THE CONTRACTOR IS TO COORDINATE ALL WORK WITH UTILITY COMPANIES INVOLVED.

   IT IS THE RESPONSIBILITY OF THE OWNER, OR HIS CONTRACTOR, TO VERIFY AND ALLOW FOR THE LOCATION AND DEPTH OF THE UNDERGROUND UTILITIES WITHIN THE WORK AREA SHOWN ON THIS PLAN. THE CONTRACTOR SHALL NOT BEGIN ANY EXCAVATION OR OTHER CONSTRUCTION AROUND OR IMMEDIATELY ADJACENT TO EXISTING UTILITIES WITHOUT NOTIFYING THE UTILITY OWNER(S) AT LEAST SEVENTY-TWO (72) HOURS IN ADVANCE OF THE START OF EXCAVATION OR CONSTRUCTION. TEST PITS FOR UTILITY LOCATIONS MAY OR MAY NOT BE REQUIRED.

   PRIOR TO ANY CONSTRUCTION, IT IS RECOMMENDED THE CONTRACTOR EXCAVATE IN THE AREA OF ANY POTENTIAL UTILITY CROSSING TO VERIFY THAT THE UTILITY WILL NOT INTERFERE WITH CONSTRUCTION. IF, AFTER UNCOVERING THE UTILITY, THERE IS ANY QUESTION CONCERNING A POSSIBLE CONFLICT, THE CONTRACTOR SHALL IMMEDIATELY CONTACT THE ENGINEER. THE CONTRACTOR SHALL TAKE ALL NECESSARY PRECAUTIONS TO PROTECT ALL EXISTING UTILITIES AND MAINTAIN UNINTERRUPTED SERVICE. ANY DAMAGE DONE TO THEM DUE TO HIS NEGLIGENCE SHALL BE IMMEDIATELY AND COMPETENTLY REPAIRED AT HIS EXPENSE.

5. EXISTING AERIAL UTILITIES ARE NOT SHOWN.

6. STORM DRAINAGE PIPE: FAIRVIEW CAMPUS ONLY

A. ALL CORRUGATED PLASTIC DRAINAGE PIPE SHALL BE HIGH DENSITY CORRUGATED POLYETHYLENE HAVING A MANNING'S (N) VALUE OF 0.012 (HDPE, N-12) AS MANUFACTURED BY ADVANCED DRAINAGE SYSTEMS, INC. OR APPROVED EQUAL, UNLESS OTHERWISE NOTED. ALL CORRUGATED PLASTIC PIPE SHALL MEET H-20 LOADING SPECIFICATIONS. ALL PIPE LENGTHS INCLUDE FLARED END SECTION (FES) WHEN APPLICABLE.

B. ALL REINFORCED CONCRETE PIPE SHALL BE CLASS III, UNLESS OTHERWISE NOTED.

   C. CORRUGATED METAL PIPE CMP SHALL BE 14 GAUGE (0.079" THICK) WITH HELICAL CORRUGATED, UNLESS OTHERWISE NOTED. ALUMINIZED STEEL PIPE AND/OR ALUMINUM PIPE MEETING H-20 LOADING SPECIFICATIONS MAY BE USED AS ALTERNATIVE MATERIALS WHERE NOTED.

12. PIPE BEDDING USED FOR THE INSTALLATION OF SANITARY SEWER SHALL MEET THE REQUIREMENTS INCLUDED IN THE NEW CASTLE COUNTY STANDARD SPECIFICATIONS FOR CONSTRUCTION AND AMENDMENTS. OTHERWISE, ALL OTHER PIPE BEDDING SHALL MEET THE REQUIREMENTS OF CLASS "C".

13. IT SHALL BE THE CONTRACTOR'S RESPONSIBILITY TO ENSURE THERE IS SUFFICIENT COVER ON ALL PIPING DURING CONSTRUCTION TO PREVENT FAILURE OF PIPES.

14. ALL UTILITY EXCAVATION SHALL BE KEPT DRY AT ALL TIMES.

15. 4" PVC PIPE SLEEVES TO BE PROVIDED FOR ALL SIGNS IN SIDEWALK AREAS.

16. ALL AREAS NOT COVERED BY PAVING OR BUILDING SHALL RECEIVE 6" MINIMUM OF TOPSOIL, SEED, AND MULCH AS SOON AS FINAL GRADING IS COMPLETE.

17. NO DEBRIS SHALL BE BURIED ON SITE.

18. DISPOSITION OF ANY EXCESS EXCAVATION AND TOPSOIL TO BE AT THE DISCRETION OF THE OWNER.

19. PROVIDE EROSION CONTROL MATTING ON ALL SLOPES 3:1 OR STEEPER. (AND IN ALL OPEN CHANNELS.)

20. CONCRETE SIDEWALKS SHALL BE 3,000 PSI PORTLAND CEMENT CONCRETE, 4" THICK, ON 4" GRADED AGGREGATE BASE COURSE, UNLESS OTHERWISE NOTED.

21. IT IS THE RESPONSIBILITY OF THE CONTRACTOR TO REPAIR AND STABILIZE EROSION AND SEDIMENT CONTROLS AND STORMWATER MANAGEMENT PRACTICES DURING CONSTRUCTION, INCLUDING AREAS DISTURBED BY UTILITY COMPANIES.

22. LANDMARK SCIENCE & ENGINEERING (LSE) MAKES NO GUARANTEE AS TO SUBSURFACE CONDITIONS THAT MAY BE ENCOUNTERED DURING CONSTRUCTION. A GEOTECHNICAL INVESTIGATION (COMPANY, DATE) HAS BEEN PERFORMED PRIOR TO PLAN PREPARATION AND RECOMMENDATIONS FROM THIS REPORT HAVE BEEN INCORPORATED INTO THE PLAN SET.(OPT. SENTENCE – REMOVE IF THIS HASN'T BEEN DONE) VARIATIONS IN CONDITIONS ARE THE RESPONSIBILITY OF THE OWNER, OR HIS CONTRACTOR, INCLUDING BUT NOT LIMITED TO GROUNDWATER, UNSUITABLE MATERIAL, ROCK, BURIED TANKS, ETC. LSE RECOMMENDS A GEOTECHNICAL CONSULTANT BE RETAINED TO EVALUATE AND MONITOR CONDITIONS BEFORE AND DURING CONSTRUCTION. SHOULD ADDITIONAL MEASURES BE NECESSARY, SUCH AS UNDERCUTTING, WELL-POINTING, STONE BEDDING UNDER PIPES, TANK REMOVAL, ETC. THE CONTRACTOR SHALL IMMEDIATELY CONTACT THE ENGINEER. THE CONTRACTOR SHALL TAKE ALL NECESSARY PRECAUTIONS AND FOLLOW THE RECOMMENDATIONS OF THE ENGINEER AND/OR THE GEOTECHNICAL ENGINEER AND COMPLY WITH ALL APPLICABLE LOCAL, STATE AND/OR FEDERAL LAWS.

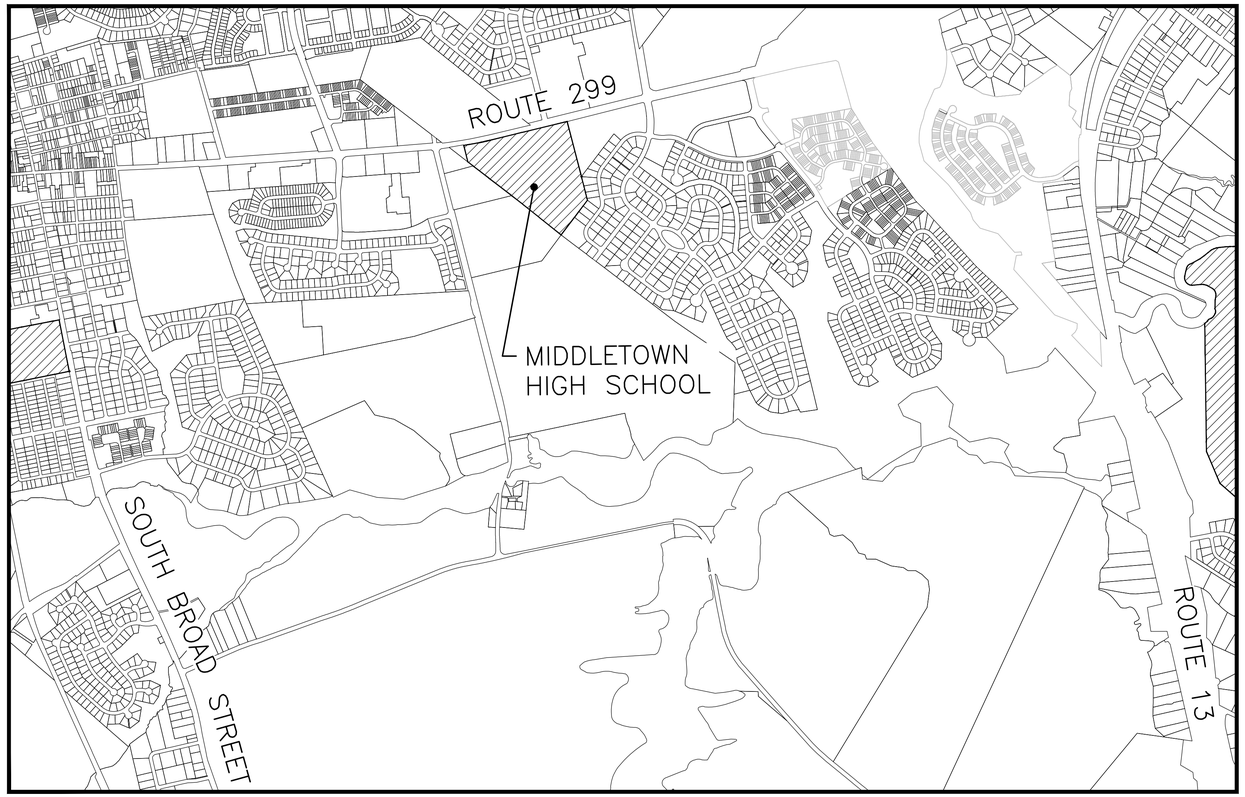

LOCATION MAP
SCALE 1" = 1,000'

SCOPE OF WORK

1. REMOVE AND DISPOSE OF EXISTING SYNTHETIC TURF CARPET, EXCERCISING CAUTION NOT TO LIFT OR OTHERWISE DISPLACE EXISTING E-LAYER PAD. REPAIR ANY SURFACE DAMAGE OR FLAWS, PATCHING WITH EQUAL MATERIAL PRIOR TO PERFORMING CARPET REPLACEMENT. CONTRACTOR SHALL INSPECT E-LAYER AFTER CARPET REMOVAL, MARKING AREAS REQUIRING PATCHING, OR OF DISPLACED, AREAS REQUIRING CUT-OUT AND REPLACEMENT TO MATCH EXISTING E-LAYER. CONTRACTOR SHALL FURNISH METHODOLOGY FOR PERFORMING THIS WORK TO THE OWNER AND ENGINEER, INCLUDING REMOVAL OF TH TURF CARPET.

2. THOROUGHLY CLEAN AND PREPARE EXISTING E-LAYER. REMOVE ANY RESIDUAL GLUE MATERIAL, AS NECESSARY, AND INSPECT FOR DEFECTS, PRIOR TO INSTALLING TURF.

3. INSTALL NEW SYNTHETIC TURF CARPET AND ANCHORING AS SPECIFIED. SUBMIT ANCHORING DETAIL AT FIELDS' PERIMETER; AND IN STADIUM AT DRAIN AND 'D' AREA SECTIONS FOR APPROVAL.

4. CONTRACTOR IS TO SEED ALL DISTURBED AREAS NOT COVERED BY SYNTHETIC TURF.

LEGEND

DX. 8"W BV	EXISTING WATER MAIN AND WATER VALVE
8"W	PROPOSED WATER MAIN AND WATER VALVE
	EXISTING VERTICAL P.C.C. CURB
	PROPOSED P.C.C. CURB TYPE 1-6
	EXISTING P.C.C. SIDEWALK
	PROPOSED P.C.C. SIDEWALK
	PROPOSED HANDICAP RAMP
	EXISTING BUILDING
	PROPOSED BUILDING
30	EXISTING CONTOUR
+ 30.0	EXISTING SPOT ELEVATION
+ 30.00	PROPOSED SPOT ELEVATION
30C	PROPOSED CONTOUR
SS	EXISTING SANITARY SEWER AND MANHOLE
	PROPOSED SANITARY SEWER AND MANHOLE
	PROPOSED BUILDING SETBACK
	PROPOSED STORMWATER MANAGEMENT AREA
	PROPOSED RIPARIAN BUFFER AREA
	EXISTING STORM DRAIN AND CATCH BASIN
	PROPOSED STORM DRAIN AND CATCH BASIN
FH	EXISTING FIRE HYDRANT
FH	PROPOSED FIRE HYDRANT
x x	EXISTING FENCE
x	PROPOSED FENCE
LOD	PROPOSED LIMITS OF DISTURBANCE

SHEET INDEX

INDEX PLAN	CC-01
CONSTRUCTION DETAILS	CC-02
MIDDLETOWN HIGH SCHOOL	CC-03

Know what's below. Call before you dig.
MISS UTILITY PHONE 1-800-282-8555
PROTECT YOURSELF, GIVE THREE WORKING DAYS NOTICE

CHECKED BY:
REVISIONS

PROJECT NUMBER: ASD21002-MHSTURFREN
INDEX PLAN
MIDDLETOWN HIGH SCHOOL
APPOQUINIMINK SCHOOL DISTRICT
TURF FIELD PROJECT
NEW CASTLE COUNTY - DELAWARE
OWNER:
APPOQUINIMINK SCHOOL DISTRICT
1118 SOUTH SIXTH STREET
ODESSA, DE 19730
(302) 378-4125

200 CONTINENTAL DRIVE
SUITE 400
NEWARK, DE 19713
PHONE (302) 329-9377
FAX (302) 329-9467
WWW.LANDMARK-SE.COM
INFO@LANDMARK-SE.COM

201 RESEARCH BLVD.
SUITE 215
ABERDEEN, MD 21001
PHONE (410) 939-2144
FAX (410) 939-2401
INFOMD@LANDMARK-SE.COM

Landmark Science & Engineering

THIS DRAWING AND THE DESIGN CONTAINED HEREIN IS THE PROPERTY OF LANDMARK ENGINEERING, INC. AND SHALL NOT BE ALTERED OR COPIED WITHOUT WRITTEN PERMISSION.

THIS DRAWING DOES NOT INCLUDE ELEMENTS REQUIRED FOR CONSTRUCTION SAFETY.

ALL CONSTRUCTION MUST BE TONE IN COMPLIANCE WITH THE OCCUPATIONAL SAFETY AND HEALTH ACT OF 1970 AND THE PROJECT SPECIFICATIONS THEREIO APPURTENANT

DRAWN BY: MKB
DESIGN BY: MKB
CHECK BY: TCW
SCALE: 1" = 1,000'
DATE: 11/19/2020
SHEET: CC-01 of 3
0 500 1,000 2,000
GRAPHIC SCALE

CC-01
COMMISSION: C2917

FILE NAME: CNST _SET_MIDDLETOWN.dwg

© 2021 LANDMARK SCIENCE & ENGINEERING

P:\C2917 APPO TURF REPLACEMENT\PLANS\CNST\CNST _SET_MIDDLETOWN.DWG

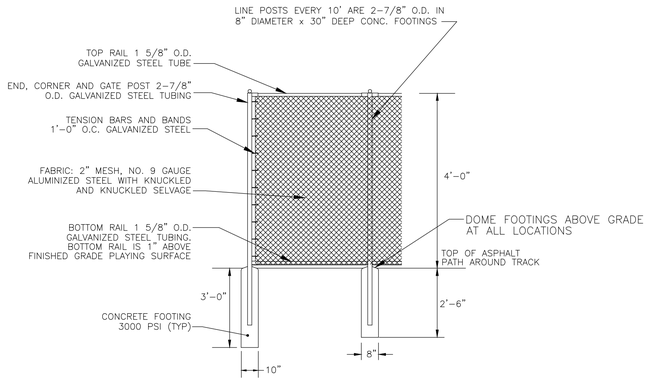

4' HIGH FENCE AND POST FOOTING

N.T.S.

FOR INFORMATIONAL PURPOSES ONLY

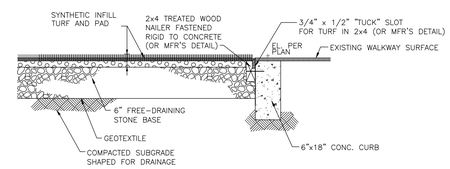

AT 'D' AREAS

TURF EDGE DETAILS

N.T.S.

INFORMATIONAL PURPOSES ONLY

811 Know what's below. Call before you dig.

MISS UTILITY PHONE 1-800-282-8555
PROTECT YOURSELF, GIVE THREE WORKING DAYS NOTICE

REVISIONS	CHECKED BY:

PROJECT NUMBER: ASD21002-MHSTURFREN
SITE CONSTRUCTION DETAILS
MIDDLETOWN HIGH SCHOOL

APPOQUINIMINK SCHOOL DISTRICT
TURF FIELD PROJECT

NEW CASTLE COUNTY - DELAWARE
OWNER:
APPOQUINIMINK SCHOOL DISTRICT
118 WEST STATE STREET
ODESSA, DE 19730
(302) 378-4125

200 CONTINENTAL DRIVE
SUITE 400
NEWARK, DE 19713
PHONE (302) 323-9377
FAX (302) 323-9461
WWW.LANDMARK-SE.COM
INFO @ LANDMARK-SE.COM

201 RESEARCH BLVD.
SUITE 115
ABERDEEN, MD 21001
PHONE (410) 939-2144
FAX (410) 939-2146
INFOMD @ LANDMARK-SE.COM

Landmark Science & Engineering

THIS DRAWING AND THE DESIGN CONTAINED HEREIN IS THE PROPERTY OF LANDMARK SCIENCE & ENGINEERING AND SHALL NOT BE ALTERED OR REUSED WITHOUT WRITTEN PERMISSION.

THIS DRAWING DOES NOT INCLUDE CONSTRUCTION SAFETY FOR CONSTRUCTION SAFETY.

ALL CONSTRUCTION MUST BE DONE IN COMPLIANCE WITH THE DELAWARE STATE CODES AND HIPA IN ACT 1911 AND 1916 AND THE DELAWARE STATE BUILDING CODES THERETO APPURTENANT

DRAWN BY: MKB	SCALE:	NTS
DESIGN BY: MKB	DATE:	11/19/2020
CHECK BY: TCW	SHEET:	CC-02 of 3

CC-02

COMMISSION: C2917

FILE NAME: CNST _SET_MIDDLETOWN.dwg

© 2021 LANDMARK SCIENCE & ENGINEERING

P:\C2917 APPO TURF REPLACEMENT\PLANS\CNST\CNST _SET_MIDDLETOWN.DWG

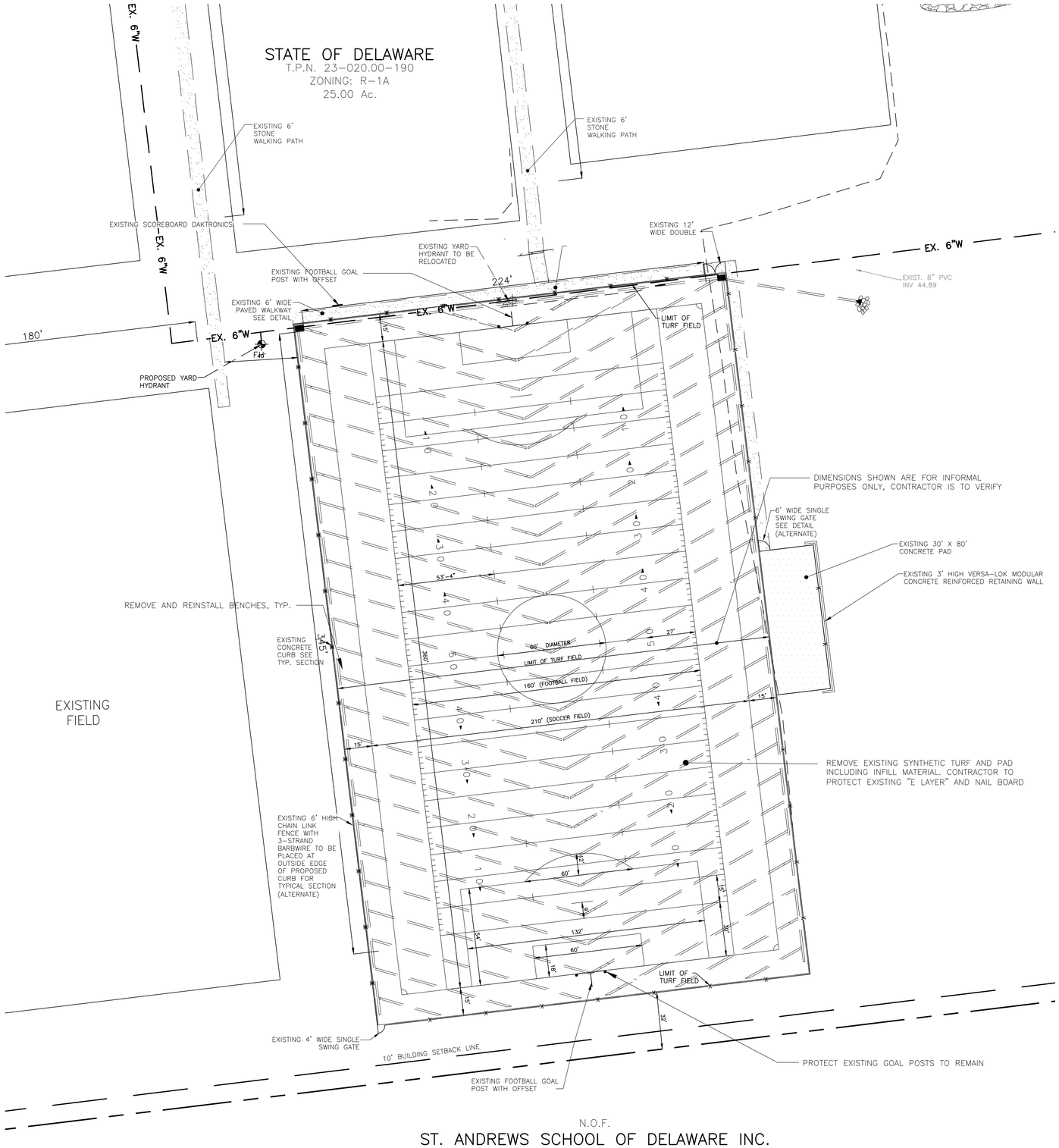

N.O.F.
ST. ANDREWS SCHOOL OF DELAWARE INC.
T.P.N. 13-022.00-018
ZONING: S
160.63 Ac.

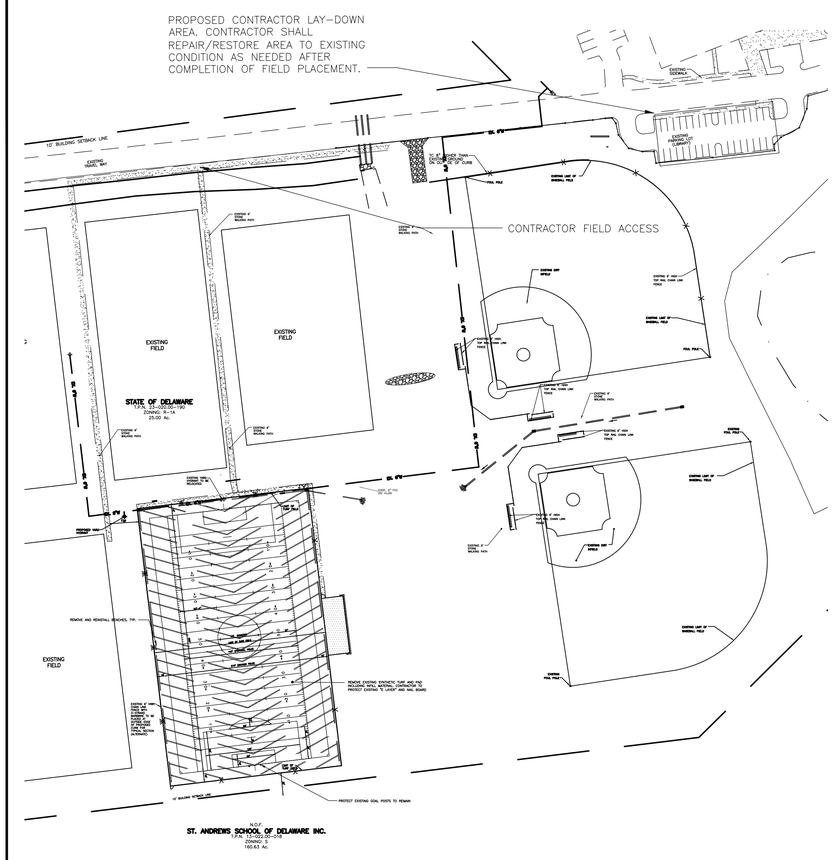

LAY-DOWN AREA PLAN
SCALE 1" = 100'

Know what's **below.**
Call before you dig.
MISS UTILITY PHONE 1-800-282-8555
PROTECT YOURSELF, GIVE THREE WORKING DAYS NOTICE

CHECKED BY:
REVISIONS

PROJECT NUMBER: ASD21002-MHSTURFREN
MIDDLETOWN HIGH SCHOOL
ATHLETIC FIELD REPLACEMENT PLAN
APPOQUINIMINK SCHOOL DISTRICT
TURF FIELD PROJECT
NEW CASTLE COUNTY - DELAWARE
OWNER:
APPOQUINIMINK SCHOOL DISTRICT
118 NORTH BROAD STREET
ODESSA, DE 19730
(302) 378-4125

200 CONTINENTAL DRIVE
SUITE 400
NEWARK, DE 19713
PHONE (302) 329-9377
FAX (302) 323-8487
WWW.LANDMARK-SE.COM
INFO@LANDMARK-SE.COM

201 RESEARCH BLVD.,
SUITE 215
ABERDEEN, MD 21001
PHONE (410) 939-2144
FAX (410) 939-2481
INFOMD@LANDMARK-SE.COM

Landmark
Science & Engineering

THIS DRAWING AND THE DESIGN CONTAINED HEREIN IS THE PROPERTY OF LANDMARK SCIENCE & ENGINEERING AND SHALL NOT BE ALTERED IN ANY WAY WITHOUT WRITTEN PERMISSION.

THIS DRAWING DOES NOT INCLUDE CONSIDERATIONS FOR CONSTRUCTION SAFETY.

ALL CONSTRUCTION MUST BE DONE IN COMPLIANCE WITH THE OSHA ACT OF 1970 AND THE ACCIDENT PREVENTION PLANS HERETO APPURTENANT

DRAWN BY: MKB	SCALE: 1"=30'		
DESIGN BY: MKB	DATE: 11/19/2020		
CHECK BY: TCW	SHEET: CC-04 of 3		

0 15 30 60 GRAPHIC SCALE

CC-03

COMMISSION: C2917

FILE NAME: CNST _SET_MIDDLETOWN.dwg

© 2021 LANDMARK SCIENCE & ENGINEERING

P:\C2917 APPO TURF REPLACEMENT\PLANS\CNST\CNST _SET_MIDDLETOWN.DWG