# EVERETT MEREDITH MIDDLE SCHOOL

**604 S Broad Street**
**Middletown, DE 19709**

\

## ISSUED FOR BID

**Volume 2 of 3**
**Date: February 21, 2020**

NOT FOR BIDDING

ABHA architects
1621 N. Lincoln St.
Wilmington, DE 19806
(P)302.658.6426
(F)302.658.8431
abhagen@ABHA.com
www.ABHA.com

# TABLE OF CONTENTS

## VOLUME 1

**DIVISION 00 – PROCUREMENT AND CONTRACTING REQUIREMENTS**

**DIVISION 01 – GENERAL REQUIREMENTS**

## VOLUME 2

**DIVISION 02 - EXISTING CONDITIONS**

| | | |
|---|---|---|
| 024100 | DEMOLITION | 1 - 5 |

**DIVISION 03 - CONCRETE**

| | | |
|---|---|---|
| 030506 | UNDER-SLAB VAPOR BARRIER | 1-2 |
| 033000 | CAST-IN-PLACE CONCRETE | 1 - 23 |
| 034900 | GLASS-FIBER REINFORCED CONCRETE | 1 - 6 |

**DIVISION 04 - MASONRY**

| | | |
|---|---|---|
| 042000 | UNIT MASONRY | 1 -16 |
| 044313 | STONE MASONRY VENEER | 1 - 3 |
| 047200 | CAST STONE MASONRY | 1 - 4 |
| 047313 | CALCIUM SILICATE MANUFACTURED STONE MASONRY | 1 - 6 |

**DIVISION 05 - METALS**

| | | |
|---|---|---|
| 051200 | STRUCTURAL STEEL | 1-11 |
| 052100 | STEEL JOISTS | 1 - 7 |
| 053100 | STEEL DECK | 1 - 9 |
| 054000 | COLD-FORMED METAL FRAMING | 1 – 9 |
| 055000 | METAL FABRICATIONS | 1 - 6 |
| 055100 | METAL STAIRS | 1 - 7 |
| 055213 | PIPE AND TUBE RAILINGS | 1 - 4 |
| 057300 | DECORATIVE METAL RAILINGS | 1 - 6 |

**DIVISION 06 – WOOD, PLASTICS, AND COMPOSITES**

| | | |
|---|---|---|
| 061000 | ROUGH CARPENTRY | 1 - 5 |
| 061213 | STRUCTURAL PANEL CONCRETE SUBFLOOR | 1 - 3 |
| 062000 | FINISH CARPENTRY | 1 - 4 |

**DIVISION 07 – THERMAL AND MOISTURE PROTECTION**

| | | |
|---|---|---|
| 071113 | BITUMINOUS DAMPPROOFING | |
| 071300 | SHEET WATERPROOFING | 1 - 5 |
| 072100 | THERMAL INSULATION | 1 - 4 |
| 072129 | SPRAYED ACOUSTICAL INSULATION | 1 - 3 |

NOT FOR BIDDING

| | | |
|---|---|---|
| 072400 | EXTERIOR INSULATION AND FINISH SYSTEMS | 1 - 5 |
| 072500 | WEATHER BARRIERS | 1 - 4 |
| 072640 | SPRAY POLYURETHANE FOAM INSULATING AIR BARRIER | 1 - 7 |
| 074213 | METAL WALL PANELS | 1 - 6 |
| 075300 | ELASTOMERIC MEMBRANE ROOFING | 1 - 6 |
| 076200 | SHEET METAL FLASHING AND TRIM | 1 - 4 |
| 077100 | ROOF SPECIALTIES | 1 - 3 |
| 077200 | ROOF ACCESSORIES | 1 - 4 |
| 078400 | FIRESTOPPING | 1 - 4 |
| 079200 | JOINT SEALANTS | 1 - 7 |
| 079513 | EXPANSION JOINT COVER ASSEMBLIES | 1 - 4 |

**DIVISION 08 – OPENINGS**

| | | |
|---|---|---|
| 081113 | HOLLOW METAL DOORS AND FRAMES | 1 - 8 |
| 081416 | FLUSH WOOD DOORS | 1 - 4 |
| 081613 | FRP FLUSH DOORS | 1 - 6 |
| 081700 | INTEGRATED DOOR OPENING ASSEMBLIES | 1 - 3 |
| 083100 | ACCESS DOORS AND PANELS | 1 - 2 |
| 083323 | OVERHEAD COILING DOORS | 1 - 7 |
| 083326 | OVERHEAD COILING GRILLES | 1 - 4 |
| 084123 | FIRE RATED ALUMINUM-FRAMED STOREFRONTS | 1 - 6 |
| 084126 | ALL GLASS ENTRANCES | 1 - 5 |
| 084313 | ALUMINUM-FRAMED STOREFRONTS | 1 - 7 |
| 085674 | ACOUSTICALLY RATED CONTROL ROOM WINDOWS | 1 - 2 |
| 087100 | DOOR HARDWARE | 1 -31 |
| 088000 | GLAZING | 1 - 8 |
| 088723 | SAFETY AND SECURITY FILMS | 1 - 2 |

**DIVISION 09 - FINISHES**

| | | |
|---|---|---|
| 090561 | COMMON WORK RESULTS FOR FLOORING PREPARATION | 1 - 5 |
| 092116 | GYPSUM BOARD ASSEMBLIES | 1 - 9 |
| 093000 | TILING | 1 - 6 |
| 095100 | ACOUSTICAL CEILINGS | 1 - 7 |
| 096429 | WOOD STRIP FLOORING | 1 - 7 |
| 096500 | RESILIENT FLOORING | 1 - 6 |
| 096566 | RESILIENT ATHLETIC FLOORING | 1 - 3 |
| 096616 | PRECAST CEMENT TERRAZZO TREADS AND LANDINGS | 1 - 3 |
| 096633 | CEMENT TERRAZZO TILES | 1 - 4 |
| 096700 | SEAMLESS FLOORING | 1 - 5 |
| 096813 | TILE CARPETING | 1 - 3 |
| 096816 | SHEET CARPETING | 1 - 3 |
| 098400 | ACOUSTIC ROOM COMPONENTS | 1 - 6 |
| 099000 | PAINTS AND COATINGS | 1 -10 |

**DIVISION 10 - SPECIALTIES**

| | | |
|---|---|---|
| 101101 | VISUAL DISPLAY BOARDS AND DISPLAY CASES | 1 - 4 |
| 102113 | PLASTIC TOILET COMPARTMENTS | 1 - 3 |
| 102123 | CUBICLE CURTAINS | 1 - 2 |
| 102601 | CORNER GUARDS | 1 - 2 |


NOT FOR BIDDING

| | | |
|---|---|---|
| 102800 | TOILET ACCESSORIES | 1 - 3 |
| 104400 | FIRE PROTECTION SPECIALTIES | 1 - 3 |
| 105100 | METAL LOCKERS | 1 - 4 |
| 107500 | FLAGPOLES | 1 - 2 |

**DIVISION 11 - EQUIPMENT**

| | | |
|---|---|---|
| 114000 | FOODSERVICE EQUIPMENT | 1 -85 |
| 115213 | PROJECTION SCREENS | 1 - 3 |
| 115415 | KILNS | 1 - 4 |
| 116113 | ORCHESTRA SHELL | 1 – 4 |
| 116133 | RIGGING SYSTEMS AND DRAPERIES | 1 -14 |
| 116625 | GYMNASIUM EQUIPMENT | 1 - 6 |

**DIVISION 12 - FURNISHINGS**

| | | |
|---|---|---|
| 122413 | WINDOW TREATMENT – ROLLER SHADES | 1 - 4 |
| 123400 | LAMINATE CLAD CASEWORK | 1 - 6 |
| 123583 | SPECIALTY CASEWORK | 1 - 4 |
| 123600 | COUNTERTOPS, BACKSPLASHES AND WINDOW STOOLS | 1 - 4 |
| 124813 | ENTRANCE FLOOR MATS AND FRAMES | 1 - 2 |
| 126113 | FIXED AUDIENCE SEATING | 1 - 9 |
| 126613 | TELESCOPING BLEACHERS | 1 - 5 |
| 129300 | SITE FURNISHINGS | 1 - 3 |

**DIVISION 14 - CONVEYING EQUIPMENT**

| | | |
|---|---|---|
| 142013 | HYDRAULIC HOLELESS PASSENGER ELEVATOR | 1 - 8 |
| 144216 | VERTICAL WHEELCHAIR LIFTS | 1 - 4 |


NOT FOR BIDDING

**VOLUME 3**

**DIVISION 21 – FIRE SUPPRESSION**


| | | |
|---|---|---|
| 210170 | FIRE SUPPRESSION SPRINKLER AND STANDPIPE SYSTEMS | 1 -18 |


**DIVISION 22 - PLUMBING**


| | | |
|---|---|---|
| 220000 | GENERAL PROVISIONS – PLUMBING/FIRE PROTECTION | 1 -11 |
| 220010 | BASIC MATERIALS AND METHODS – PLUMBING | 1 -11 |
| 220030 | INSULATION & COVERING – PLUMBING | 1 - 5 |
| 220110 | DRAINAGE SYSTEMS – PLUMBING | 1 - 8 |
| 220120 | DOMESTIC WATER SYSTEMS – PLUMBING | 1 - 7 |
| 220130 | GAS PIPING SYSTEMS – PLUMBING | 1 - 5 |
| 220140 | FIXTURES – PLUMBING | 1 – 8 |
| 220150 | EQUIPMENT – PLUMBING | 1 - 6 |
| 220190 | TESTING – PLUMBING | 1 - 5 |
| 220191 | BALANCING – PLUMBING | 1 - 2 |
| 221113 | FACILITY WATER DISTRIBUTION PIPING | 1 - 4 |
| 221313 | FACILITY SANITARY SEWERS | 1 - 6 |


**DIVISION 23 - HVAC**


| | | |
|---|---|---|
| 230200 | GENERAL PROVISIONS – HVAC | 1 -10 |
| 230210 | BASIC MATERIALS AND METHODS – HVAC | 1 -13 |
| 230215 | VALVES | 1 - 8 |
| 230230 | INSULATION & COVERING – HVAC | 1 - 8 |
| 230300 | VIBRATION ISOLATION – HVAC | 1 - 5 |
| 230400 | HEATING GENERATION EQUIPMENT | 1 - 5 |
| 230410 | HEATING GENERATION AUXILIARY EQUIPMENT | 1 - 3 |
| 230450 | REFRIGERATION EQUIPMENT – HVAC | 1 - 7 |
| 230500 | PIPING SYSTEMS & ACCESSORIES – HVAC | 1 - 7 |
| 230505 | HVAC UNDERGROUND PIPING SYSTEMS | 1 - 3 |
| 230510 | WATER TREATMENT (HVAC) | 1 - 4 |
| 230600 | AIR DISTRIBUTION AND ACCESSORIES – HVAC | 1-15 |
| 230605 | FANS | 1 - 3 |
| 230725 | TERMINAL HEATING UNITS | 1 - 3 |
| 230760 | AIR HANDLING EQUIPMENT | 1 -14 |
| 230861 | AIR PURIFICATION SYSTEM | 1 - 6 |
| 230900 | AUTOMATIC TEMPERATURE CONTROLS (DDC) | 1 -26 |
| 230950 | TESTING & BALANCING OF MECHANICAL SYSTEMS | 1 - 5 |


**DIVISION 26 - ELECTRICAL**


| | | |
|---|---|---|
| 260000 | GENERAL PROVISIONS – ELECTRICAL | 1 -11 |
| 260053 | ELECTRICAL IDENTIFICATION | 1 - 3 |
| 260110 | RACEWAYS | 1 - 4 |
| 260120 | WIRES AND CABLES | 1 - 3 |
| 260130 | MANHOLES | 1 - 2 |
| 260135 | ELECTRICAL BOXES & FITTINGS | 1 - 3 |
| 260140 | WIRING DEVICES | 1 - 4 |
| 260155 | MOTOR STARTERS | 1 - 3 |


NOT FOR BIDDING

| | | |
|---|---|---|
| 260156 | ADJUSTABLE FREQUENCY DRIVES | 1 - 3 |
| 260160 | PANELBOARDS | 1 - 3 |
| 260165 | SWITCHBOARDS | 1 - 2 |
| 260170 | MOTOR AND CIRCUIT DISCONNECTS | 1 - 2 |
| 260180 | OVERCURRENT PROTECTIVE DEVICES | 1 - 2 |
| 260190 | SUPPORTING DEVICES | 1 - 2 |
| 260195 | POWER SYSTEM STUDIES | 1 - 3 |
| 260430 | METERING EQUIPMENT | 1 - 2 |
| 260444 | PAD-MOUNTED PRIMARY LOAD INTERRUPTER | 1 - 3 |
| 260452 | GROUNDING | 1 - 2 |
| 260460 | TRANSFORMERS | 1 - 4 |
| 260470 | DISTRIBUTION CIRCUITS | 1 - 1 |
| 260471 | FEEDER CIRCUITS | 1 - 1 |
| 260472 | BRANCH CIRCUITS | 1 - 2 |
| 260475 | ELEVATOR ELECTRICAL SYSTEMS | 1 - 3 |
| 260510 | BUILDING LIGHTING | 1 - 3 |
| 260520 | ROADWAY & PARKING AREA LIGHTING | 1 - 2 |
| 260601 | LIGHTNING PROTECTION SYSTEMS | 1 - 2 |
| 260660 | SURGE PROTECTIVE DEVICES (INTEGRAL & EXTERNAL) | 1 - 4 |
| 260731 | WIRELESS CLOCK SYSTEM | 1 - 8 |
| 260740 | NETWORK CABLING SYSTEMS (DCET) SCHOOL | 1 -55 |
| 260771 | INTERCOM/TELEPHONE COMMUNICATION SYSTEMS | 1 -15 |
| 260773 | CLASSROOM AUDIO, SAFETY & INTERCOMMUNICATION SYS. | 1 -19 |
| 260851 | HEATING TERMINALS | 1 - 3 |
| 260961 | PERFORMANCE LIGHTING SYSTEMS | 1 - 17 |
| 260963 | PERFORMANCE LIGHTING SYSTEMS INSTALLATION | 1 - 4 |
| 260973 | SOUND, VIDEO, & COMMUNICATION SYSTEMS INSTALLATION | 1 - 1 |
| 262861 | COMPANY SWITCHES | 1 - 4 |
| 266010 | RIGGING SYSTEMS ELECTRICAL WORK | 1 - 1 |

**DIVISION 27 - COMMUNICATIONS**

| | | |
|---|---|---|
| 274117 | SOUND, VIDEO, & COMMUNICATION SYSTEMS | 1 - 35 |

**DIVISION 28 – ELECTRONIC SAFETY AND SECURITY**

| | | |
|---|---|---|
| 280721 | FIRE ALARM AND DETECTION SYSTEMS | 1 -32 |
| 280724 | AREA RESCUE SYSTEM | 1 - 5 |
| 280725 | INTRUSION DETECTION SYSTEM | 1 - 6 |
| 280727 | INTEGRATED ACCESS CONTROL & SECURITY MANAGEMENT SYSTEM | 1 -44 |
| 280728 | CCTV-NETWORK DIGITAL VIDEO MANAGEMENT SYSTEM | 1- 9 |

**DIVISION 31 – EARTHWORK**

| | | |
|---|---|---|
| 311000 | SITE CLEARIN | 1 - 6 |
| 312000 | EARTH MOVING | 1 - 9 |
| 312319 | DEWATERING | 1 - 6 |


NOT FOR BIDDING

**DIVISION 32 - EXTERIOR IMPROVEMENTS**


| | | |
|---|---|---|
| 321216 | ASPHALT PAVING | 1 - 8 |
| 321313 | CONCRETE PAVING | 1 - 7 |
| 323113 | CHAIN LINK FENCES AND GATES | 1 - 7 |
| 323119 | DECORATIVE METAL FENCES AND GATES | 1 - 3 |
| 323120 | LOUVERED GATES | 1 - 5 |


**DIVISION 33 – SITE UTILITIES**


| | | |
|---|---|---|
| 334100 | STORM UTILITY DRAINAGE PIPING | 1 - 4 |
| 334600 | SUBDRAINAGE | 1 - 4 |


NOT FOR BIDDING

# SECTION 024100
# DEMOLITION

## PART 1 GENERAL

1.01 SECTION INCLUDES

A. Building demolition excluding removal of hazardous materials and toxic substances.

B. Selective demolition of built site elements.

C. Abandonment and removal of existing utilities and utility structures.

1.02 RELATED REQUIREMENTS

A. Available Project Information: Existing building survey conducted by Owner; information about known hazardous materials.

B. Section 011000 - Summary: Limitations on Contractor's use of site and premises.

C. Section 011000 - Summary: Description of items to be salvaged or removed for re-use by Contractor.

D. Section 015200 - Temporary Facilities and Controls: Site fences, security, protective barriers, and waste removal.

E. Section 016200 - Product Requirements: Handling and storage of items removed for salvage and relocation.

F. Division 01 Sections: Project conditions; protection of bench marks, survey control points, and existing construction to remain; reinstallation of removed products; temporary bracing and shoring.

G. Section 311000 - Site Clearing: Vegetation and existing debris removal.

H. Section 312200 - Grading: Topsoil removal.

I. Division 31: Fill material for filling holes, pits, and excavations generated as a result of removal operations.

1.03 PRICE AND PAYMENT PROCEDURES

A. See Section 012300 - Alternates, for alternates affecting the work of this section.

1.04 REFERENCE STANDARDS

A. 29 CFR 1926 - U.S. Occupational Safety and Health Standards; current edition.

B. NFPA 241 - Standard for Safeguarding Construction, Alteration, and Demolition Operations; 2013.

1.05 DEFINITIONS

A. Remove: Detach items from existing construction and legally dispose of them off-site, unless indicated to be removed and salvaged or removed and reinstalled.

B. Remove and Salvage: Detach items from existing construction and deliver them to Construction Manager.

C. Remove and Reinstall: Detach items from existing construction, prepare them for reuse, and reinstall them where indicated.

D. Existing to Remain: Existing items of construction that are not to be removed and that are not otherwise indicated to be removed, removed and salvaged, or removed and reinstalled.

NOT FOR BIDDING

1.06 MATERIALS OWNERSHIP

A. Except for items or materials indicated to be reused, salvaged, reinstalled, or otherwise indicated to remain Owner's property, demolished materials shall become Contractor's property and shall be removed from Project site.

B. Historic items, relics, and similar objects including, but not limited to, cornerstones and their contents, commemorative plaques and tablets, antiques, and other items of interest or value to Owner that may be encountered during selective demolition remain Owner's property. Carefully remove and salvage each item or object in a manner to prevent damage and deliver promptly to Owner.

1.07 SUBMITTALS

A. Demolition Plan: Submit demolition plan as specified by OSHA and local authorities.
   1. Indicate extent of demolition, removal sequence, bracing and shoring, and location and construction of barricades and fences.
   2. Identify demolition firm and submit qualifications.
   3. Include a summary of safety procedures.

B. Demolition Contractor's Qualification Statement.

C. Project Record Documents: Accurately record actual locations of capped and active utilities and subsurface construction.

1.08 QUALITY ASSURANCE

A. Demolition Firm Qualifications: Company specializing in the type of work required.
   1. Minimum of ten years of documented experience.

B. Predemolition Conference: Conduct conference at Project site to comply with requirements in Division 1 Section "Execution Requirements." Review methods and procedures related to demolition including, but not limited to, the following:
   1. Inspect and discuss condition of construction to be demolished.
   2. Review structural load limitations of existing structure.
   3. Review and finalize demolition schedule and verify availability of materials, demolition personnel, equipment, and facilities needed to make progress and avoid delays.
   4. Review requirements of work performed by other trades.

**PART 2 PRODUCTS**

2.01 MATERIALS

A. Fill Material: As specified in Section 312000 - Earthwork.
   1. Refer to Structural Drawings for fill and compaction requirements for areas under new structures.

**PART 3 EXECUTION**

3.01 SCOPE

A. Remove the entire building designated Everett Meredith Middle School.
   1. Existing building is 1-3 stories with a partial basement.
   2. Remove outbuildings, including foundations.
   3. Remove chiller and chiller enclosure.
   4. Remove miscellaneous site elements, including signs, flagpoles, and piers.

B. Remove all paving and curbs as indicated on drawings.

C. Remove foundation walls, basements, slabs and footings completely.

NOT FOR BIDDING

D. Remove concrete slabs on grade completely, unless otherwise noted.

E. Break up concrete slabs on grade in basement areas to permit natural moisture drainage; leave pieces not larger than 1 square yard.

F. Remove underground tanks.

G. Remove manholes and manhole covers, curb inlets and catch basins.

H. Remove fences and gates.

I. Remove other items indicated, for salvage, relocation, and recycling.

J. Fill excavations, open pits, and holes in ground areas generated as result of removal, using specified fill; compact fill as specified in Division 31 and noted on Drawings.

3.02 GENERAL PROCEDURES AND PROJECT CONDITIONS

A. Comply with applicable codes and regulations for demolition operations and safety of adjacent structures and the public.
   1. Obtain required permits.
   2. Comply with applicable requirements of NFPA 241.
   3. Use of explosives is not permitted.
   4. Take precautions to prevent catastrophic or uncontrolled collapse of structures to be removed; do not allow worker or public access within range of potential collapse of unstable structures.
   5. Provide, erect, and maintain temporary barriers and security devices.
   6. Use physical barriers to prevent access to areas that could be hazardous to workers or the public.
   7. Conduct operations to minimize effects on and interference with adjacent structures and occupants.
   8. Do not close or obstruct roadways or sidewalks without permit.
   9. Conduct operations to minimize obstruction of public and private entrances and exits; do not obstruct required exits at any time; protect persons using entrances and exits from removal operations.
   10. Obtain written permission from owners of adjacent properties when demolition equipment will traverse, infringe upon or limit access to their property.

B. Do not begin removal until receipt of notification to proceed from Owner.

C. Do not begin removal until built elements to be salvaged or relocated have been removed.

D. Do not begin removal until vegetation to be relocated has been removed and specified measures have been taken to protect vegetation to remain.

E. Protect existing structures and other elements that are not to be removed.
   1. Provide bracing and shoring.
   2. Prevent movement or settlement of adjacent structures.
   3. Stop work immediately if adjacent structures appear to be in danger.

F. Minimize production of dust due to demolition operations; do not use water if that will result in ice, flooding, sedimentation of public waterways or storm sewers, or other pollution.

G. If hazardous materials are discovered during removal operations, stop work and notify Construction Manager and Owner; hazardous materials include regulated asbestos containing materials, lead, PCB's, and mercury.

H. Perform demolition in a manner that maximizes salvage and recycling of materials.
   1. Dismantle existing construction and separate materials.

NOT FOR BIDDING

2. Set aside reusable, recyclable, and salvageable materials; store and deliver to collection point or point of reuse.

I. Partial Removal of Paving and Curbs: Neatly saw cut at right angle to surface.

3.03 EXISTING UTILITIES

A. Coordinate work with utility companies; notify before starting work and comply with their requirements; obtain required permits.

B. Protect existing utilities to remain from damage.

C. Do not disrupt public utilities without permit from authority having jurisdiction.

D. Do not close, shut off, or disrupt existing life safety systems that are in use without at least 7 days prior written notification to Owner.

E. Do not close, shut off, or disrupt existing utility branches or take-offs that are in use without at least 3 days prior written notification to Owner.

F. Locate and mark utilities to remain; mark using highly visible tags or flags with identification of utility type; protect from damage due to subsequent construction, using substantial barricades if necessary.

G. Remove exposed piping, valves, meters, equipment, supports, and foundations of disconnected and abandoned utilities.

H. Prepare building demolition areas by disconnecting and capping utilities outside the demolition zone; identify and mark utilities to be subsequently reconnected, in same manner as other utilities to remain.

3.04 SELECTIVE DEMOLITION

A. Drawings showing existing construction and utilities are based on casual field observation and existing record documents only.
   1. Verify that construction and utility arrangements are as shown.
   2. Report discrepancies to Architect before disturbing existing installation.
   3. Beginning of demolition work constitutes acceptance of existing conditions that would be apparent upon examination prior to starting demolition.

B. Removed and Salvaged Items: Comply with the following:
   1. Clean salvaged items.
   2. Pack or crate items after cleaning. Identify contents of containers.
   3. Store items in a secure area until delivery to Owner.
   4. Transport items to Owner's storage area designated by Owner.
   5. Protect items from damage during transport and storage.

C. Items to be salvaged from the existing building:
   1. Datestone
   2. Existing brick units from original 1928 facade (4,100 units)
   3. Wood strip classroom flooring (200 sf)
   4. Dedication plaques.

3.05 DEBRIS AND WASTE REMOVAL

A. Remove debris, junk, and trash from site.
   1. Promptly dispose of demolished materials. Do not allow demolished materials to accumulate on-site.
   2. Remove and transport debris in a manner that will prevent spillage on adjacent surfaces and areas.

NOT FOR BIDDING

3. Remove debris from elevated portions of building by chute, hoist, or other device that will convey debris to grade level in a controlled descent.

B. Burning: Do not burn demolished materials.

C. Remove from site all materials not to be reused on site; do not burn or bury.

D. Leave site in clean condition, ready for subsequent work.

E. Clean up spillage and wind-blown debris from public and private lands.

**END OF SECTION**

NOT FOR BIDDING

# SECTION 030506
# UNDER-SLAB VAPOR BARRIER

## PART 1 - GENERAL

1.01 SECTION INCLUDES

A. Vapor Barrier, seam tape, mastic, pipe boots, detail strip for installation under concrete slabs.

1.02 RELATED SECTIONS

A. Section 033000 Cast-in-place Concrete

1.03 REFERENCES

A. American Society for Testing and Materials (ASTM)
   1. ASTM E 1745-97(2004) Standard Specification for Plastic Water Vapor Retarders Used in Contact with Soil or Granular Fill Under Concrete Slabs
   2. ASTM E 154-99(2005) Standard Test Methods for Water Vapor Retarders Used in Contact with Earth Under Concrete Slabs
   3. ASTM E 96-05 Standard Test Methods for Water Vapor Transmission of Materials
   4. ASTM E 1643-98(2005) Standard Practice for Installation of Water Vapor Retarders Used in Contact with Earth or Granular Fill Under Concrete Slabs

B. American Concrete Institute (ACI):
   1. ACI 302.2R-06 Guide for Concrete Slabs that Receive Moisture-Sensitive Flooring Materials.
   2. ACI 302.1R-15 Guide to Concrete Floor and Slab Construction.

1.04 ADMINISTRATIVE REQUIREMENTS

A. Preinstallation Meeting: Convene a pre-installation meeting two weeks before starting work of this section; require attendance by all relevant installers.

B. Refer to Section 013000 - Administrative Requirements for additional information.

1.05 SUBMITTALS

A. See Section 013000 - Administrative Requirements, for submittal procedures.

B. Quality Control / Assurance
   1. Submit Independent laboratory test results showing compliance with ASTM & ACI Standards.

C. Submit Manufacturer's samples and product data.

D. Submit Manufacturer's most current installation instructions for placement, seaming and pipe boot installation

## PART 2 - PRODUCTS

2.01 MATERIALS

A. Vapor Barrier shall have all of the following qualities:
   1. Maintain permeance of less than 0.01 Perms [grains/(ft2 * hr * inHg)] as tested in accordance with mandatory conditioning tests per ASTM E1745 Section 7.1 (7.1.1-7.1.5).
   2. Other performance criteria:
      a. Strength: ASTM E1745 Class A.
      b. Thickness: 15 mils minimum
   3. Provide third party documentation that all testing was performed on a single production roll per ASTM E1745 Section 8.1

B. Vapor Barrier Products:

NOT FOR BIDDING

1. Stego Wrap (15 mil) Vapor Barrier by STEGO INDUSTRIES LLC, San Clemente, CA (877) 464-7834 www.stegoindustries.com
2. Griffolyn 15 mil Green Vapor Barrier by Reef Industries, Inc.
3. VaporBlock 15 by Raven Industries, Inc.

C. ACCESSORIES
1. Seam Tape
a. Tape must have the following qualities:
1) Water Vapor Transmission Rate ASTM E 96: 0.3 perms or lower
2. Vapor Proofing Mastic
a. Mastic must have the following qualities:
1) Water Vapor Transmission Rate ASTM E 96: 0.3 perms or lower
3. Pipe Boots
a. Provide manufacturer's supplied pipe boot system or construct pipe boots from vapor barrier material, pressure sensitive tape and/or mastic per manufacturer's instructions.

**PART 3 - EXECUTION**

3.01 PREPARATION

A. Ensure that subsoil is approved by architect or geotechnical firm
1. Level and tamp or roll aggregate, sand or tamped earth base.

3.02 INSTALLATION

A. Installation shall be in accordance with manufacturer's most current instructions and ASTM E 1643.
1. Unroll Vapor Barrier with the longest dimension parallel with the direction of the concrete placement and face laps away from the expected direction of the placement whenever possible.
2. Clean the surface of the Vapor Barrier and the areas of adhesion to ensure the surfaces for adhesion are free from dust, dirt, moisture, frost and any other contaminant that may impair the sealing of the seam and to allow maximum adhesion of the pressure sensitive seam tape or adhesive.
3. Lap Vapor Barrier/Retarder over footings and seal to foundation walls.
4. Overlap joints 6 inches and seal with manufacturer's tape.
5. Seal all penetrations (including pipes) per manufacturer's instructions.
6. No penetration of the Vapor Barrier is allowed except for reinforcing steel and permanent utilities.
7. Repair damaged areas by cutting patches of Vapor Barrier/Retarder, overlapping damaged area 6 inches and taping all four sides with tape,providing a vapor-tight seal.

**END OF SECTION**

NOT FOR BIDDING

# SECTION 033000

# CAST-IN-PLACE CONCRETE

## PART 1 - GENERAL

### 1.1 RELATED DOCUMENTS

A. Drawings and general provisions of the Contract, including General and Supplementary Conditions and Division 1 Specification Sections, apply to this Section.

### 1.2 SUMMARY

A. This Section specifies cast-in place concrete, including formwork, reinforcement, concrete materials, mixture design, placement procedures, and finishes, for the following:

1. Footings.
2. Foundation walls.
3. Slabs-on-grade.
4. Suspended slabs.

### 1.3 DEFINITIONS

A. Cementitious Materials: Portland cement alone or in combination with one or more of the following: blended hydraulic cement, fly ash and other pozzolans, ground granulated blast-furnace slag, and silica fume; subject to compliance with requirements.

### 1.4 SUBMITTALS

A. Product Data: For each type of product indicated.

B. Design Mixtures: For each concrete mixture. Submit alternate design mixtures when characteristics of materials, Project conditions, weather, test results, or other circumstances warrant adjustments.

1. Indicate amounts of mixing water to be withheld for later addition at Project site.

C. Steel Reinforcement Shop Drawings: Placing drawings that detail fabrication, bending, and placement. Include bar sizes, lengths, material, grade, bar schedules, stirrup spacing, bent bar diagrams, bar arrangement, splices and laps, mechanical connections, tie spacing, hoop spacing, and supports for concrete reinforcement.

D. Samples: For waterstops and vapor retarder.

E. Welding certificates.

NOT FOR BIDDING

F. Qualification Data: For Installer, manufacturer, testing agency.

G. Material Test Reports: For the following, from a qualified testing agency, indicating compliance with requirements:

1. Aggregates.

H. Material Certificates: For each of the following, signed by manufacturers:

1. Cementitious materials.
2. Admixtures.
3. Form materials and form-release agents.
4. Steel reinforcement and accessories.
5. Waterstops.
6. Curing compounds.
7. Floor and slab treatments.
8. Bonding agents.
9. Adhesives.
10. Vapor retarders.
11. Semirigid joint filler.
12. Joint-filler strips.
13. Repair materials.

I. Floor surface flatness and levelness measurements to determine compliance with specified tolerances.

J. Field quality-control test reports.

K. Minutes of preinstallation conference.

## 1.5 QUALITY ASSURANCE

A. Installer Qualifications: A qualified installer who employs on Project personnel qualified as ACI-certified Flatwork Technician and Finisher and a supervisor who is an ACI-certified Concrete Flatwork Technician.

B. Manufacturer Qualifications: A firm experienced in manufacturing ready-mixed concrete products and that complies with ASTM C 94/C 94M requirements for production facilities and equipment.

1. Manufacturer certified according to NRMCA's "Certification of Ready Mixed Concrete Production Facilities."

C. Testing Agency Qualifications: An independent agency, acceptable to authorities having jurisdiction, qualified according to ASTM C 1077 and ASTM E 329 for testing indicated, as documented according to ASTM E 548.

1. Personnel conducting field tests shall be qualified as ACI Concrete Field Testing Technician, Grade 1, according to ACI CP-01 or an equivalent certification program.

NOT FOR BIDDING

2. Personnel performing laboratory tests shall be ACI-certified Concrete Strength Testing Technician and Concrete Laboratory Testing Technician - Grade I. Testing Agency laboratory supervisor shall be an ACI-certified Concrete Laboratory Testing Technician - Grade II.

D. Source Limitations: Obtain each type or class of cementitious material of the same brand from the same manufacturer's plant, obtain aggregate from one source, and obtain admixtures through one source from a single manufacturer.

E. Welding: Qualify procedures and personnel according to AWS D1.4, "Structural Welding Code--Reinforcing Steel."

F. ACI Publications: Comply with the following unless modified by requirements in the Contract Documents:

1. ACI 301, "Specification for Structural Concrete,"
2. ACI 117, "Specifications for Tolerances for Concrete Construction and Materials."

G. Concrete Testing Service: Engage a qualified independent testing agency to perform material evaluation tests and to design concrete mixtures.

H. Preinstallation Conference: Conduct conference at Project site to comply with requirements in Division 1 Section "Project Management and Coordination."

1. Before submitting design mixtures, review concrete design mixture and examine procedures for ensuring quality of concrete materials. Require representatives of each entity directly concerned with cast-in-place concrete to attend, including the following:

a. Contractor's superintendent.
b. Independent testing agency responsible for concrete design mixtures.
c. Ready-mix concrete manufacturer.
d. Concrete subcontractor.

2. Review special inspection and testing and inspecting agency procedures for field quality control, concrete finishes and finishing, cold- and hot-weather concreting procedures, curing procedures, construction contraction and isolation joints, and joint-filler strips, forms and form removal limitations, vapor-retarder installation, steel reinforcement installation, floor and slab flatness and levelness measurement, and concrete protection.

## 1.6 DELIVERY, STORAGE, AND HANDLING

A. Steel Reinforcement: Deliver, store, and handle steel reinforcement to prevent bending and damage.

B. Waterstops: Store waterstops under cover to protect from moisture, sunlight, dirt, oil, and other contaminants.

NOT FOR BIDDING

PART 2 - PRODUCTS

2.1 MANUFACTURERS

A. In other Part 2 articles where titles below introduce lists, the following requirements apply to product selection:

1. Available Products: Subject to compliance with requirements, products that may be incorporated into the Work include, but are not limited to, products specified.
2. Available Manufacturers: Subject to compliance with requirements, manufacturers offering products that may be incorporated into the Work include, but are not limited to, manufacturers specified.

2.2 FORM-FACING MATERIALS

A. Smooth-Formed Finished Concrete: Form-facing panels that will provide continuous, true, and smooth concrete surfaces. Furnish in largest practicable sizes to minimize number of joints.

1. Plywood, metal, or other approved panel materials.
2. Exterior-grade plywood panels, suitable for concrete forms, complying with DOC PS 1, and as follows:

a. High-density overlay, Class 1 or better.

B. Rough-Formed Finished Concrete: Plywood, lumber, metal, or another approved material. Provide lumber dressed on at least two edges and one side for tight fit.

C. Chamfer Strips: Wood, metal, PVC, or rubber strips, 3/4 by 3/4 inch (19 by 19 mm), minimum.

D. Form-Release Agent: Commercially formulated form-release agent that will not bond with, stain, or adversely affect concrete surfaces and will not impair subsequent treatments of concrete surfaces.

1. Formulate form-release agent with rust inhibitor for steel form-facing materials.

E. Form Ties: Factory-fabricated, removable or snap-off metal or glass-fiber-reinforced plastic form ties designed to resist lateral pressure of fresh concrete on forms and to prevent spalling of concrete on removal.

1. Furnish units that will leave no corrodible metal closer than 1 inch (25 mm) to the plane of exposed concrete surface.
2. Furnish ties that, when removed, will leave holes no larger than 1 inch (25 mm) in diameter in concrete surface.
3. Furnish ties with integral water-barrier plates to walls indicated to receive dampproofing or waterproofing.

NOT FOR BIDDING

## 2.3 STEEL REINFORCEMENT

A. Reinforcing Bars: ASTM A 615/A 615M, Grade 60 (Grade 420), deformed.

B. Steel Bar Mats: ASTM A 184/A 184M, fabricated from ASTM A 615/A 615M, Grade 60 (Grade 420) , deformed bars, assembled with clips.

C. Plain-Steel Welded Wire Reinforcement: ASTM A 185, plain, fabricated from as-drawn steel wire into flat sheets.

## 2.4 REINFORCEMENT ACCESSORIES

A. Joint Dowel Bars: ASTM A 615/A 615M, Grade 60 (Grade 420), plain-steel bars, cut bars true to length with ends square and free of burrs.

B. Bar Supports: Bolsters, chairs, spacers, and other devices for spacing, supporting, and fastening reinforcing bars and welded wire reinforcement in place. Manufacture bar supports from steel wire, plastic, or precast concrete according to CRSI's "Manual of Standard Practice," of greater compressive strength than concrete and as follows:

1. For concrete surfaces exposed to view where legs of wire bar supports contact forms, use CRSI Class 1 plastic-protected steel wire or CRSI Class 2 stainless-steel bar supports.

## 2.5 CONCRETE MATERIALS

A. Cementitious Material: Use the following cementitious materials, of the same type, brand, and source, throughout Project.

1. Portland Cement: ASTM C 150, Type I/II, gray. Supplement with the following:

   a. Fly Ash: ASTM C 618, Class C.
   b. Ground Granulated Blast-Furnace Slag: ASTM C 989, Grade 100 or 120.

B. Silica Fume: ASTM C 1240, amorphous silica.

C. Normal Weight Aggregates: ASTM C 33, Class 3S coarse aggregate or better, graded. Provide aggregates from a single source.

1. Maximum Coarse-Aggregate Size: 1 inch (25 mm) nominal.
2. Fine Aggregate: Free of materials with deleterious reactivity to alkali in cement.

D. Water: ASTM C 94/C 94M and potable.

## 2.6 ADMIXTURES

A. Air-Entraining Admixture: ASTM C 260.

NOT FOR BIDDING

B. Chemical Admixtures: Provide admixtures certified by manufacturer to be compatible with other admixtures and that will not contribute water-soluble chloride ions exceeding those permitted in hardened concrete. Do not use calcium chloride or admixtures containing calcium chloride.

1. Water-Reducing Admixture: ASTM C 494/C 494M, Type A.
2. Retarding Admixture: ASTM C 494/C 494M, Type B.
3. High-Range, Water-Reducing Admixture: ASTM C 494/C 494M, Type F.
4. Plasticizing and Retarding Admixture: ASTM C 1017/C 1017M, Type II.

C. Set-Accelerating Corrosion-Inhibiting Admixture: Commercially formulated, anodic inhibitor or mixed cathodic and anodic inhibitor; capable of forming a protective barrier and minimizing chloride reactions with steel reinforcement in concrete and complying with ASTM C 494/C 494M, Type C. Provide at exterior concrete slabs.

1. Products:

a. Boral Material Technologies, Inc.; Boral BCN.
b. Euclid Chemical Company (The); Eucon CIA.
c. Grace Construction Products, W. R. Grace & Co.; DCI.
d. Master Builders, Inc.; Rheocrete CNI.
e. Sika Corporation; Sika CNI.

D. Non-Set-Accelerating Corrosion-Inhibiting Admixture: Commercially formulated, non-set-accelerating, anodic inhibitor or mixed cathodic and anodic inhibitor; capable of forming a protective barrier and minimizing chloride reactions with steel reinforcement in concrete. Provide at exterior concrete slabs.

1. Products:

a. Axim Concrete Technologies; Catexol 1000CI.
b. Boral Material Technologies, Inc.; Boral BCN2.
c. Grace Construction Products, W. R. Grace & Co.; DCI-S.
d. Master Builders, Inc.; Rheocrete 222+.
e. Sika Corporation; FerroGard-901.

E. Color Pigments: ASTM C 979, synthetic mineral-oxide pigments or colored water-reducing admixtures; color stable, free of carbon black, nonfading, and resistant to lime and other alkalis.

1. Manufacturers:

a. Bayer Corporation.
b. ChemMasters.
c. Conspec Marketing & Manufacturing Co., Inc.; a Dayton Superior Company.
d. Davis Colors.
e. Elementis Pigments, Inc.
f. Hoover Color Corporation.
g. Lambert Corporation.
h. Scofield, L. M. Company.
i. Solomon Colors.

NOT FOR BIDDING

2. Color: As selected by Architect from manufacturer's full range.

## 2.7 WATERSTOPS

A. Self-Expanding Butyl Strip Waterstops: Manufactured rectangular or trapezoidal strip, butyl rubber with sodium bentonite or other hydrophilic polymers, for adhesive bonding to concrete, 3/4 by 1 inch (19 by 25 mm).

1. Products:

a. Colloid Environmental Technologies Company; Volclay Waterstop-RX.
b. Approved equal

## 2.8 VAPOR RETARDERS

A. Plastic Vapor Retarder: ASTM E 1745, Class C, or polyethylene sheet, ASTM D 4397, not less than 15 mils thick. Include manufacturer's recommended adhesive or pressure-sensitive joint tape.

1. Products:
a. Stego Industries, LLC; Stego Wrap, 15 mil.

B. Granular Fill: Clean mixture of crushed stone or crushed or uncrushed gravel; ASTM D 448, Size 57, with 100 percent passing a 1-1/2-inch (37.5-mm) sieve and 0 to 5 percent passing a No. 8 (2.36-mm) sieve.

## 2.9 FLOOR AND SLAB TREATMENTS

A. Penetrating Liquid Floor Treatment: Provide at all exposed concrete surfaces to be treated to harden, seal and densify exposed concrete. Clear, chemically reactive, waterborne solution of inorganic silicate or siliconate materials and proprietary components; odorless; colorless; that penetrates, hardens, and densifies concrete surfaces.

1. Products:
a. Dayton Superior Corporation; Day-Chem Sure Hard.
b. Euclid Chemical Company (The); Euco Diamond Hard.
c. L&M Construction Chemicals, Inc.; Seal Hard.
d. Meadows, W. R., Inc.; Liqui-Hard.

B. Stained Hardener with matching cure/sealer - Pigmented Mineral Dry-Shake Floor Hardener: Factory-packaged, dry combination of portland cement, graded quartz aggregate, color pigments, and plasticizing admixture. Use color pigments that are finely ground, nonfading mineral oxides interground with cement. Placing of hardener is followed by manufacturer’s recommended water membrane-forming cure and seal: ASTM C 309

1. Products:
a. L&M Construction Chemicals, Inc.; Quartz Plate FF Hardener followed by Dress & Seal WB 30 per manufacturer’s recommendations and specifications.

NOT FOR BIDDING

b. Scofield, L. M. Company; Lithochrome Color Hardener followed by Lithochrome Colorwax in matching color per manufacturer's recommendations and specifications.

## 2.10 CURING MATERIALS

A. Evaporation Retarder: Waterborne, monomolecular film forming, manufactured for application to fresh concrete.

1. Products:
   a. Conspec Marketing & Manufacturing Co., Inc., a Dayton Superior Company; Aquafilm.
   b. Dayton Superior Corporation; Sure Film.
   c. Euclid Chemical Company (The); Eucobar.
   d. L&M Construction Chemicals, Inc.; E-Con.
   e. Meadows, W. R., Inc.; Sealtight Evapre.
   f. Sika Corporation, Inc.; SikaFilm.

B. Absorptive Cover: AASHTO M 182, Class 2, burlap cloth made from jute or kenaf, weighing approximately 9 oz./sq. yd. (305 g/sq. m) when dry.

C. Moisture-Retaining Cover: ASTM C 171, polyethylene film or white burlap-polyethylene sheet.

D. Water: Potable.

E. Clear, Waterborne, Membrane-Forming Curing Compound: ASTM C 309, Type 1, Class B, dissipating.

1. Products:
   a. Dayton Superior Corporation; Day Chem Rez Cure (J-11-W).
   b. Euclid Chemical Company (The); Kurez DR VOX.
   c. L&M Construction Chemicals, Inc.; L&M Cure R.
   d. Meadows, W. R., Inc.; 1100 Clear.
   e. Tamms Industries, Inc.; Horncure WB 30.

## 2.11 RELATED MATERIALS

A. Expansion- and Isolation-Joint-Filler Strips: ASTM D 1751, asphalt-saturated cellulosic fiber or ASTM D 1752, cork or self-expanding cork.

B. Bonding Agent: ASTM C 1059, Type II, non-redispersible, acrylic emulsion or styrene butadiene.

C. Reglets: Fabricate reglets of not less than 0.0217-inch- (0.55-mm-) thick, galvanized steel sheet. Temporarily fill or cover face opening of reglet to prevent intrusion of concrete or debris.

NOT FOR BIDDING

D. Dovetail Anchor Slots: Hot-dip galvanized steel sheet, not less than 0.0336 inch (0.85 mm) thick, with bent tab anchors. Temporarily fill or cover face opening of slots to prevent intrusion of concrete or debris.

## 2.12 REPAIR MATERIALS

A. Repair Underlayment: Cement-based, polymer-modified, self-leveling product that can be applied in thicknesses from 1/8 inch (3.2 mm) and that can be feathered at edges to match adjacent floor elevations.

1. Cement Binder: ASTM C 150, portland cement or hydraulic or blended hydraulic cement as defined in ASTM C 219.
2. Primer: Product of underlayment manufacturer recommended for substrate, conditions, and application.
3. Aggregate: Well-graded, washed gravel, 1/8 to 1/4 inch (3.2 to 6 mm) or coarse sand as recommended by underlayment manufacturer.
4. Compressive Strength: Not less than 4100 psi (29 MPa) at 28 days when tested according to ASTM C 109/C 109M.

B. Repair Overlayment: Cement-based, polymer-modified, self-leveling product that can be applied in thicknesses from 1/8 inch (3.2 mm) and that can be feathered at edges to match adjacent floor elevations.

1. Cement Binder: ASTM C 150, portland cement or hydraulic or blended hydraulic cement as defined in ASTM C 219.
2. Primer: Product of topping manufacturer recommended for substrate, conditions, and application.
3. Aggregate: Well-graded, washed gravel, 1/8 to 1/4 inch (3.2 to 6 mm) or coarse sand as recommended by topping manufacturer.
4. Compressive Strength: Not less than 5000 psi (34.5 MPa) at 28 days when tested according to ASTM C 109/C 109M.

## 2.13 CONCRETE MIXTURES, GENERAL

A. Prepare design mixtures for each type and strength of concrete, proportioned on the basis of laboratory trial mixture or field test data, or both, according to ACI 301.

1. Use a qualified independent testing agency for preparing and reporting proposed mixture designs based on laboratory trial mixtures.

B. Cementitious Materials: Limit percentage, by weight, of cementitious materials other than portland cement in concrete as follows:
1. Combined Fly Ash or Pozzolan and Ground Granulated Blast-Furnace Slag: 50 percent portland cement minimum, with fly ash or pozzolan not exceeding 25 percent.
2. Silica Fume: 10 percent.

C. Limit water-soluble, chloride-ion content in hardened concrete to 0.15 percent by weight of cement at exterior conditions and 0.30 percent by weight of cement at interior conditions.

NOT FOR BIDDING

D. Admixtures: Use admixtures according to manufacturer's written instructions.

1. Use water-reducing or plasticizing admixture in concrete, as required, for placement and workability.
2. Use water-reducing and retarding admixture when required by high temperatures, low humidity, or other adverse placement conditions.
3. Use water-reducing admixture in pumped concrete, concrete for heavy-use industrial slabs and parking structure slabs, concrete required to be watertight, and concrete with water-cementitious materials ratio below 0.50.
4. Use corrosion-inhibiting admixture in concrete mixtures where indicated.

E. Color Pigment: Add color pigment to concrete mixture according to manufacturer's written instructions and to result in hardened concrete color consistent with approved mockup. Coordinate color and location with Architect.

## 2.14 CONCRETE MIXTURES FOR BUILDING ELEMENTS

A. Footings: Proportion normal-weight concrete mixture as follows:

1. Minimum Compressive Strength: 4000 psi (27.6 MPa) at 28 days.
2. Maximum Water-Cementitious Materials Ratio: 0.50.
3. Slump Limit: 3 inch minimum and 5 inch maximum (at point of concrete placement), plus or minus 1 inch (25 mm).
4. Exposure Class: F2, S0, C1, P0

B. Foundation Walls: Proportion normal-weight concrete mixture as follows:

1. Minimum Compressive Strength: 4000 psi (27.6 MPa) at 28 days.
2. Maximum Water-Cementitious Materials Ratio: 0.50.
3. Slump Limit: 3 inch minimum and 5 inch maximum (at point of concrete placement), plus or minus 1 inch (25 mm).
4. Exposure Class: F2, S0, C1, P0

C. Slabs-on-Grade - Interior: Proportion normal-weight concrete mixture as follows:

1. Minimum Compressive Strength: 4000 psi (27.6 MPa) at 28 days.
2. Minimum Cementitious Materials Content: 520 lb/cu. yd. (309 kg/cu. m).
3. Slump Limit: 3 inch minimum and 5 inch maximum (at point of concrete placement), plus or minus 1 inch (25 mm).
4. Exposure Class: F2, So, C1, P0

D. Slabs-on-Grade – Exterior (Exposed to Exterior Conditions): Proportion normal-weight concrete mixture as follows:

1. Minimum Compressive Strength: 4500 psi (31 MPa) at 28 days.
2. Minimum Cementitious Materials Content: 520 lb/cu. yd. (309 kg/cu. m).
3. Slump Limit: 3 inch minimum and 5 inch maximum (at point of concrete placement), plus or minus 1 inch (25 mm).
4. Air Content: 6 percent, plus or minus 1.5 percent at point of delivery for 1-inch (25-mm) nominal maximum aggregate size.

NOT FOR BIDDING

5. Air Content: Do not allow air content of troweled finished floors to exceed 3 percent.
6. Exposure Class: F2, S0, C2, P0

E. Suspended Slabs: Proportion normal-weight concrete mixture as follows:

1. Minimum Compressive Strength: 3500 psi (24.1 MPa) at 28 days.
2. Minimum Cementitious Materials Content: 470 lb/cu. yd. (309 kg/cu. m).
3. Slump Limit: 3 inch minimum and 5 inch maximum (at point of concrete placement), plus or minus 1 inch (25 mm). For pumpable concrete, slumps may be increased by 3 inches.
4. Exposure Class: F0, S0, C0, P0

## 2.15 FABRICATING REINFORCEMENT

A. Fabricate steel reinforcement according to CRSI's "Manual of Standard Practice."

## 2.16 CONCRETE MIXING

A. Ready-Mixed Concrete: Measure, batch, mix, and deliver concrete according to ASTM C 94/C 94M, and furnish batch ticket information.

1. When air temperature is between 85 and 90 deg F (30 and 32 deg C), reduce mixing and delivery time from 1-1/2 hours to 75 minutes, when air temperature is above 90 deg F (32 deg C), reduce mixing and delivery time to 60 minutes.

B. Project-Site Mixing: Measure, batch, and mix concrete materials and concrete according to ASTM C 94/C 94M. Mix concrete materials in appropriate drum-type batch machine mixer.

1. For mixer capacity of 1 cu. yd. (0.76 cu. m) or smaller, continue mixing at least 1-1/2 minutes, but not more than 5 minutes after ingredients are in mixer, before any part of batch is released.
2. For mixer capacity larger than 1 cu. yd. (0.76 cu. m), increase mixing time by 15 seconds for each additional 1 cu. yd. (0.76 cu. m).
3. Provide batch ticket for each batch discharged and used in the Work, indicating Project identification name and number, date, mixture type, mixture time, quantity, and amount of water added. Record approximate location of final deposit in structure.

# PART 3 - EXECUTION

## 3.1 FORMWORK

A. Design, erect, shore, brace, and maintain formwork, according to ACI 301, to support vertical, lateral, static, and dynamic loads, and construction loads that might be applied, until structure can support such loads.

B. Construct formwork so concrete members and structures are of size, shape, alignment, elevation, and position indicated, within tolerance limits of ACI 117.

NOT FOR BIDDING

C. Limit concrete surface irregularities, designated by ACI 347R as abrupt or gradual, as follows:

1. Class A, 1/8 inch (3.2 mm) for smooth-formed finished surfaces.
2. Class C, 1/2 inch (13 mm) for rough-formed finished surfaces.

D. Construct forms tight enough to prevent loss of concrete mortar.

E. Fabricate forms for easy removal without hammering or prying against concrete surface. Provide crush or wrecking plates where stripping may damage cast concrete surfaces. Provide top forms for inclined surfaces steeper than 1.5 horizontal to 1 vertical.

1. Install keyways, reglets, recesses, and the like, for easy removal.
2. Do not use rust-stained steel form-facing material.

F. Set edge forms, bulkheads, and intermediate screed strips for slabs to achieve required elevations and slopes in finished concrete surfaces. Provide and secure units to support screed strips; use strike-off templates or compacting-type screeds.

G. Provide temporary openings for cleanouts and inspection ports where interior area of formwork is inaccessible. Close openings with panels tightly fitted to forms and securely braced to prevent loss of concrete mortar. Locate temporary openings in forms at inconspicuous locations.

H. Chamfer exterior corners and edges of permanently exposed concrete.

I. Form openings, chases, offsets, sinkages, keyways, reglets, blocking, screeds, and bulkheads required in the Work. Determine sizes and locations from trades providing such items.

J. Clean forms and adjacent surfaces to receive concrete. Remove chips, wood, sawdust, dirt, and other debris just before placing concrete.

K. Retighten forms and bracing before placing concrete, as required, to prevent mortar leaks and maintain proper alignment.

L. Coat contact surfaces of forms with form-release agent, according to manufacturer's written instructions, before placing reinforcement.

## 3.2 EMBEDDED ITEMS

A. Place and secure anchorage devices and other embedded items required for adjoining work that is attached to or supported by cast-in-place concrete. Use setting drawings, templates, diagrams, instructions, and directions furnished with items to be embedded.

1. Install anchor rods, accurately located, to elevations required and complying with tolerances in Section 7.5 of AISC's "Code of Standard Practice for Steel Buildings and Bridges."
2. Install reglets to receive waterproofing and to receive through-wall flashings in outer face of concrete frame at exterior walls, where flashing is shown at lintels, shelf angles, and other conditions.
3. Install dovetail anchor slots in concrete structures as indicated.

NOT FOR BIDDING

## 3.3 REMOVING AND REUSING FORMS

A. General: Formwork for sides of beams, walls, columns, and similar parts of the Work that does not support weight of concrete may be removed after cumulatively curing at not less than 50 deg F (10 deg C) for 24 hours after placing concrete, if concrete is hard enough to not be damaged by form-removal operations and curing and protection operations are maintained.

1. Leave formwork for beam soffits, joists, slabs, and other structural elements that support weight of concrete in place until concrete has achieved at least 70 percent of its 28-day design compressive strength.
2. Remove forms only if shores have been arranged to permit removal of forms without loosening or disturbing shores.

B. Clean and repair surfaces of forms to be reused in the Work. Splits, frayed, delaminated, or otherwise damaged form-facing material will not be acceptable for exposed surfaces. Apply new form-release agent.

C. When forms are reused, clean surfaces, remove fins and laitance, and tighten to close joints. Align and secure joints to avoid offsets. Do not use patched forms for exposed concrete surfaces unless approved by Architect.

## 3.4 SHORES AND RESHORES

A. Comply with ACI 318 (ACI 318M) and ACI 301 for design, installation, and removal of shoring and reshoring.

1. Do not remove shoring or reshoring until measurement of slab tolerances is complete.

B. In multistory construction, extend shoring or reshoring over a sufficient number of stories to distribute loads in such a manner that no floor or member will be excessively loaded or will induce tensile stress in concrete members without sufficient steel reinforcement.

C. Plan sequence of removal of shores and reshore to avoid damage to concrete. Locate and provide adequate reshoring to support construction without excessive stress or deflection.

## 3.5 VAPOR RETARDERS

A. Plastic Vapor Retarders: Place, protect, and repair vapor retarders according to ASTM E 1643 and manufacturer's written instructions.

1. Lap joints 6 inches (150 mm) and seal with manufacturer's recommended tape.

B. Bituminous Vapor Retarders: Place, protect, and repair vapor retarders according to manufacturer's written instructions.

C. Granular Course: Cover vapor retarder with granular fill, moisten, and compact with mechanical equipment to elevation tolerances of plus 0 inch (0 mm) or minus 3/4 inch (19 mm).

NOT FOR BIDDING

## 3.6 STEEL REINFORCEMENT

A. General: Comply with CRSI's "Manual of Standard Practice" for placing reinforcement.

1. Do not cut or puncture vapor retarder. Repair damage and reseal vapor retarder before placing concrete.

B. Clean reinforcement of loose rust and mill scale, earth, ice, and other foreign materials that would reduce bond to concrete.

C. Accurately position, support, and secure reinforcement against displacement. Locate and support reinforcement with bar supports to maintain minimum concrete cover. Do not tack weld crossing reinforcing bars.

1. Weld reinforcing bars according to AWS D1.4, where indicated.

D. Set wire ties with ends directed into concrete, not toward exposed concrete surfaces.

E. Install welded wire reinforcement in longest practicable lengths on bar supports spaced to minimize sagging. Lap edges and ends of adjoining sheets at least one mesh spacing. Offset laps of adjoining sheet widths to prevent continuous laps in either direction. Lace overlaps with wire.

## 3.7 JOINTS

A. General: Construct joints true to line with faces perpendicular to surface plane of concrete.

B. Construction Joints: Install so strength and appearance of concrete are not impaired, at locations indicated or as approved by Architect.

1. Place joints perpendicular to main reinforcement. Continue reinforcement across construction joints, unless otherwise indicated. Do not continue reinforcement through sides of strip placements of floors and slabs.
2. Form keyed joints as indicated. Embed keys at least 1-1/2 inches (38 mm) into concrete.
3. Locate joints for beams, slabs, joists, and girders in the middle third of spans. Offset joints in girders a minimum distance of twice the beam width from a beam-girder intersection.
4. Locate horizontal joints in walls and columns at underside of floors, slabs, beams, and girders and at the top of footings or floor slabs.
5. Space vertical joints in walls as indicated. Locate joints beside piers integral with walls, near corners, and in concealed locations where possible.
6. Use a bonding agent at locations where fresh concrete is placed against hardened or partially hardened concrete surfaces.
7. Use epoxy-bonding adhesive at locations where fresh concrete is placed against hardened or partially hardened concrete surfaces.

C. Contraction Joints in Slabs-on-Grade: Form weakened-plane contraction joints, sectioning concrete into areas as indicated. Construct contraction joints for a depth equal to at least one-fourth of concrete thickness as follows:

NOT FOR BIDDING

1. Grooved Joints: Form contraction joints after initial floating by grooving and finishing each edge of joint to a radius of 1/8 inch (3.2 mm). Repeat grooving of contraction joints after applying surface finishes. Eliminate groover tool marks on concrete surfaces.
2. Sawed Joints: Form contraction joints with power saws equipped with shatterproof abrasive or diamond-rimmed blades. Cut 1/8-inch- (3.2-mm-) wide joints into concrete when cutting action will not tear, abrade, or otherwise damage surface and before concrete develops random contraction cracks.

D. Isolation Joints in Slabs-on-Grade: After removing formwork, install joint-filler strips at slab junctions with vertical surfaces, such as column pedestals, foundation walls, grade beams, and other locations, as indicated.

1. Extend joint-filler strips full width and depth of joint, terminating flush with finished concrete surface, unless otherwise indicated.
2. Terminate full-width joint-filler strips not less than 1/2 inch (13 mm) or more than 1 inch (25 mm) below finished concrete surface where joint sealants, specified in Division 7 Section "Joint Sealants," are indicated.
3. Install joint-filler strips in lengths as long as practicable. Where more than one length is required, lace or clip sections together.

E. Doweled Joints: Install dowel bars and support assemblies at joints where indicated. Lubricate or asphalt coat one-half of dowel length to prevent concrete bonding to one side of joint.

## 3.8 WATERSTOPS

A. Flexible Waterstops: Install in construction joints and at other joints indicated to form a continuous diaphragm. Install in longest lengths practicable. Support and protect exposed waterstops during progress of the Work. Field fabricate joints in waterstops according to manufacturer's written instructions.

B. Self-Expanding Strip Waterstops: Install in construction joints and at other locations indicated, according to manufacturer's written instructions, adhesive bonding, mechanically fastening, and firmly pressing into place. Install in longest lengths practicable.

## 3.9 CONCRETE PLACEMENT

A. Before placing concrete, verify that installation of formwork, reinforcement, and embedded items is complete and that required inspections have been performed.

B. Do not add water to concrete during delivery, at Project site, or during placement unless approved by Architect.

C. Before test sampling and placing concrete, water may be added at Project site, subject to limitations of ACI 301.

1. Do not add water to concrete after adding high-range water-reducing admixtures to mixture.

NOT FOR BIDDING

D. Deposit concrete continuously in one layer or in horizontal layers of such thickness that no new concrete will be placed on concrete that has hardened enough to cause seams or planes of weakness. If a section cannot be placed continuously, provide construction joints as indicated. Deposit concrete to avoid segregation.

1. Deposit concrete in horizontal layers of depth to not exceed formwork design pressures and in a manner to avoid inclined construction joints.
2. Consolidate placed concrete with mechanical vibrating equipment according to ACI 301.
3. Do not use vibrators to transport concrete inside forms. Insert and withdraw vibrators vertically at uniformly spaced locations to rapidly penetrate placed layer and at least 6 inches (150 mm) into preceding layer. Do not insert vibrators into lower layers of concrete that have begun to lose plasticity. At each insertion, limit duration of vibration to time necessary to consolidate concrete and complete embedment of reinforcement and other embedded items without causing mixture constituents to segregate.

E. Deposit and consolidate concrete for floors and slabs in a continuous operation, within limits of construction joints, until placement of a panel or section is complete.

1. Consolidate concrete during placement operations so concrete is thoroughly worked around reinforcement and other embedded items and into corners.
2. Maintain reinforcement in position on chairs during concrete placement.
3. Screed slab surfaces with a straightedge and strike off to correct elevations.
4. Slope surfaces uniformly to drains where required.
5. Begin initial floating using bull floats or darbies to form a uniform and open-textured surface plane, before excess bleed water appears on the surface. Do not further disturb slab surfaces before starting finishing operations.

F. Cold-Weather Placement: Comply with ACI 306.1 and as follows. Protect concrete work from physical damage or reduced strength that could be caused by frost, freezing actions, or low temperatures.

1. When average high and low temperature is expected to fall below 40 deg F (4.4 deg C) for three successive days, maintain delivered concrete mixture temperature within the temperature range required by ACI 301.
2. Do not use frozen materials or materials containing ice or snow. Do not place concrete on frozen subgrade or on subgrade containing frozen materials.
3. Do not use calcium chloride, salt, or other materials containing antifreeze agents or chemical accelerators unless otherwise specified and approved in mixture designs.

G. Hot-Weather Placement: Comply with ACI 301 and as follows:

1. Maintain concrete temperature below 90 deg F (32 deg C) at time of placement. Chilled mixing water or chopped ice may be used to control temperature, provided water equivalent of ice is calculated to total amount of mixing water. Using liquid nitrogen to cool concrete is Contractor's option.
2. Fog-spray forms, steel reinforcement, and subgrade just before placing concrete. Keep subgrade uniformly moist without standing water, soft spots, or dry areas.

NOT FOR BIDDING

## 3.10 FINISHING FORMED SURFACES

A. Rough-Formed Finish: As-cast concrete texture imparted by form-facing material with tie holes and defects repaired and patched. Remove fins and other projections that exceed specified limits on formed-surface irregularities.

1. Apply to concrete surfaces not exposed to public view.

B. Smooth-Formed Finish: As-cast concrete texture imparted by form-facing material, arranged in an orderly and symmetrical manner with a minimum of seams. Repair and patch tie holes and defects. Remove fins and other projections that exceed specified limits on formed-surface irregularities.

1. Apply to concrete surfaces exposed to public view, to be covered with a coating or covering material applied directly to concrete.

C. Related Unformed Surfaces: At tops of walls, horizontal offsets, and similar unformed surfaces adjacent to formed surfaces, strike off smooth and finish with a texture matching adjacent formed surfaces. Continue final surface treatment of formed surfaces uniformly across adjacent unformed surfaces, unless otherwise indicated.

## 3.11 FINISHING FLOORS AND SLABS

A. General: Comply with ACI 302.1R recommendations for screeding, restraightening, and finishing operations for concrete surfaces. Do not wet concrete surfaces.

B. Scratch Finish: While still plastic, texture concrete surface that has been screeded and bull-floated or darbied. Use stiff brushes, brooms, or rakes to produce a profile amplitude of 1/4 inch (6 mm) in 1 direction.

1. Apply scratch finish to surfaces indicated and to receive concrete floor toppings.

C. Float Finish: Consolidate surface with power-driven floats or by hand floating if area is small or inaccessible to power driven floats. Restraighten, cut down high spots, and fill low spots. Repeat float passes and restraightening until surface is left with a uniform, smooth, granular texture.

1. Apply float finish to surfaces indicated to receive trowel finish and to be covered with fluid-applied or sheet waterproofing, built-up or membrane roofing, or sand-bed terrazzo.

D. Trowel Finish: After applying float finish, apply first troweling and consolidate concrete by hand or power-driven trowel. Continue troweling passes and restraighten until surface is free of trowel marks and uniform in texture and appearance. Grind smooth any surface defects that would telegraph through applied coatings or floor coverings.

1. Apply a trowel finish to surfaces indicated, exposed to view or to be covered with resilient flooring, carpet, ceramic or quarry tile set over a cleavage membrane, paint, or another thin-film-finish coating system.

NOT FOR BIDDING

2. Finish surfaces to the following tolerances, according to ASTM E 1155 (ASTM E 1155M), for a randomly trafficked floor surface and per ACI 117 "Specification For Tolerances For Concrete Construction & Materials":

   a. Specified overall values of flatness, F(F) 25; and of levelness, F(L) 20 as a minimum. Coordinate and specify minimum F(F) and F(L) values with flooring manufacturer during concrete pre-installation conference. Note: Flooring manufacturer may require very flat surface classification ( F(F) 45; F(L) 35) or super flat surface classification ( F(F) 60 ; F(L) 40). Coordinate locations and requirements prior to installation.

   b. Provide maximum floor variation of 1/8" in 10' and 1/16" in 1' for terrazzo floor tile area or requirement as indicated by product manufacturer, whichever is more stringent.

E. Broom Finish: Apply a broom finish to exterior concrete platforms, steps, and ramps, and elsewhere as indicated.

   1. Immediately after float finishing, slightly roughen trafficked surface by brooming with fiber-bristle broom perpendicular to main traffic route. Coordinate required final finish with Architect before application.

## 3.12 MISCELLANEOUS CONCRETE ITEMS

A. Filling In: Fill in holes and openings left in concrete structures, unless otherwise indicated, after work of other trades is in place. Mix, place, and cure concrete, as specified, to blend with in-place construction. Provide other miscellaneous concrete filling indicated or required to complete the Work.

B. Curbs: Provide monolithic finish to interior curbs by stripping forms while concrete is still green and by steel-troweling surfaces to a hard, dense finish with corners, intersections, and terminations slightly rounded.

C. Equipment Bases and Foundations: Provide machine and equipment bases and foundations as shown on Drawings. Set anchor bolts for machines and equipment at correct elevations, complying with diagrams or templates from manufacturer furnishing machines and equipment.

D. Steel Pan Stairs: Provide concrete fill for steel pan stair treads, landings, and associated items. Cast-in inserts and accessories as shown on Drawings. Screed, tamp, and trowel-finish concrete surfaces.

## 3.13 CONCRETE PROTECTING AND CURING

A. General: Protect freshly placed concrete from premature drying and excessive cold or hot temperatures. Comply with ACI 306.1 for cold-weather protection and ACI 301 for hot-weather protection during curing.

B. Evaporation Retarder: Apply evaporation retarder to unformed concrete surfaces if hot, dry, or windy conditions cause moisture loss approaching 0.2 lb/sq. ft. x h (1 kg/sq. m x h) before and

NOT FOR BIDDING

during finishing operations. Apply according to manufacturer's written instructions after placing, screeding, and bull floating or darbying concrete, but before float finishing.

C. Formed Surfaces: Cure formed concrete surfaces, including underside of beams, supported slabs, and other similar surfaces. If forms remain during curing period, moist cure after loosening forms. If removing forms before end of curing period, continue curing for the remainder of the curing period.

D. Unformed Surfaces: Begin curing immediately after finishing concrete. Cure unformed surfaces, including floors and slabs, concrete floor toppings, and other surfaces.

E. Cure concrete according to ACI 308.1, by one or a combination of the following methods:

1. Moisture Curing: Keep surfaces continuously moist for not less than seven days with the following materials:

   a. Water.
   b. Continuous water-fog spray.
   c. Absorptive cover, water saturated, and kept continuously wet. Cover concrete surfaces and edges with 12-inch (300-mm) lap over adjacent absorptive covers.

2. Moisture-Retaining-Cover Curing: Cover concrete surfaces with moisture-retaining cover for curing concrete, placed in widest practicable width, with sides and ends lapped at least 12 inches (300 mm), and sealed by waterproof tape or adhesive. Cure for not less than seven days. Immediately repair any holes or tears during curing period using cover material and waterproof tape.

   a. Moisture cure or use moisture-retaining covers to cure concrete surfaces to receive floor coverings.
   b. Moisture cure or use moisture-retaining covers to cure concrete surfaces to receive penetrating liquid floor treatments.
   c. Cure concrete surfaces to receive floor coverings with either a moisture-retaining cover or curing compound that the manufacturer certifies will not interfere with bonding of floor covering used on Project..

3. Curing Compound: Apply uniformly in continuous operation by power spray or roller according to manufacturer's written instructions. Recoat areas subjected to heavy rainfall within three hours after initial application. Maintain continuity of coating and repair damage during curing period.

   a. After curing period has elapsed, remove curing compound without damaging concrete surfaces by method recommended by curing compound manufacturer unless manufacturer certifies curing compound will not interfere with bonding of floor covering used on Project.

4. Curing and Sealing Compound: Apply uniformly to floors and slabs indicated in a continuous operation by power spray or roller according to manufacturer's written instructions. Recoat areas subjected to heavy rainfall within three hours after initial application. Repeat process 24 hours later and apply a second coat. Maintain continuity of coating and repair damage during curing period.

NOT FOR BIDDING

## 3.14 JOINT FILLING

A. Prepare, clean, and install joint filler according to manufacturer's written instructions.

1. Defer joint filling until concrete has aged at least one month(s). Do not fill joints until construction traffic has permanently ceased.

B. Remove dirt, debris, saw cuttings, curing compounds, and sealers from joints; leave contact faces of joint clean and dry.

C. Install semirigid joint filler full depth in saw-cut joints and at least 2 inches (50 mm) deep in formed joints. Overfill joint and trim joint filler flush with top of joint after hardening.

## 3.15 CONCRETE SURFACE REPAIRS

A. Defective Concrete: Repair and patch defective areas when approved by Architect. Remove and replace concrete that cannot be repaired and patched to Architect's approval.

B. Patching Mortar: Mix dry-pack patching mortar, consisting of one part portland cement to two and one-half parts fine aggregate passing a No. 16 (1.18-mm) sieve, using only enough water for handling and placing.

C. Repairing Formed Surfaces: Surface defects include color and texture irregularities, cracks, spalls, air bubbles, honeycombs, rock pockets, fins and other projections on the surface, and stains and other discolorations that cannot be removed by cleaning.

1. Immediately after form removal, cut out honeycombs, rock pockets, and voids more than 1/2 inch (13 mm) in any dimension in solid concrete, but not less than 1 inch (25 mm) in depth. Make edges of cuts perpendicular to concrete surface. Clean, dampen with water, and brush-coat holes and voids with bonding agent. Fill and compact with patching mortar before bonding agent has dried. Fill form-tie voids with patching mortar or cone plugs secured in place with bonding agent.
2. Repair defects on surfaces exposed to view by blending white portland cement and standard portland cement so that, when dry, patching mortar will match surrounding color. Patch a test area at inconspicuous locations to verify mixture and color match before proceeding with patching. Compact mortar in place and strike off slightly higher than surrounding surface.
3. Repair defects on concealed formed surfaces that affect concrete's durability and structural performance as determined by Architect.

D. Repairing Unformed Surfaces: Test unformed surfaces, such as floors and slabs, for finish and verify surface tolerances specified for each surface. Correct low and high areas. Test surfaces sloped to drain for trueness of slope and smoothness; use a sloped template.

1. Repair finished surfaces containing defects. Surface defects include spalls, popouts, honeycombs, rock pockets, crazing and cracks in excess of 0.01 inch (0.25 mm) wide or that penetrate to reinforcement or completely through unreinforced sections regardless of width, and other objectionable conditions.
2. After concrete has cured at least 14 days, correct high areas by grinding.

NOT FOR BIDDING

3. Correct localized low areas during or immediately after completing surface finishing operations by cutting out low areas and replacing with patching mortar. Finish repaired areas to blend into adjacent concrete.
4. Correct other low areas scheduled to receive floor coverings with a repair underlayment. Prepare, mix, and apply repair underlayment and primer according to manufacturer's written instructions to produce a smooth, uniform, plane, and level surface. Feather edges to match adjacent floor elevations.
5. Correct other low areas scheduled to remain exposed with a repair topping. Cut out low areas to ensure a minimum repair topping depth of 1/4 inch (6 mm) to match adjacent floor elevations. Prepare, mix, and apply repair topping and primer according to manufacturer's written instructions to produce a smooth, uniform, plane, and level surface.
6. Repair defective areas, except random cracks and single holes 1 inch (25 mm) or less in diameter, by cutting out and replacing with fresh concrete. Remove defective areas with clean, square cuts and expose steel reinforcement with at least a 3/4-inch (19-mm) clearance all around. Dampen concrete surfaces in contact with patching concrete and apply bonding agent. Mix patching concrete of same materials and mixture as original concrete except without coarse aggregate. Place, compact, and finish to blend with adjacent finished concrete. Cure in same manner as adjacent concrete.
7. Repair random cracks and single holes 1 inch (25 mm) or less in diameter with patching mortar. Groove top of cracks and cut out holes to sound concrete and clean off dust, dirt, and loose particles. Dampen cleaned concrete surfaces and apply bonding agent. Place patching mortar before bonding agent has dried. Compact patching mortar and finish to match adjacent concrete. Keep patched area continuously moist for at least 72 hours.

E. Perform structural repairs of concrete, subject to Architect's approval, using epoxy adhesive and patching mortar.

F. Repair materials and installation not specified above may be used, subject to Architect's approval.

## 3.16 FIELD QUALITY CONTROL

A. Testing and Inspecting: Owner will engage a qualified testing and inspecting agency to perform field tests and inspections and prepare test reports.

B. Testing and Inspecting: Engage a qualified testing and inspecting agency to perform tests and inspections and to submit reports.

C. Inspections:

1. Steel reinforcement placement.
2. Steel reinforcement welding.
3. Headed bolts and studs.
4. Verification of use of required design mixture.
5. Concrete placement, including conveying and depositing.
6. Curing procedures and maintenance of curing temperature.
7. Verification of concrete strength before removal of shores and forms from beams and slabs.

NOT FOR BIDDING

D. Concrete Tests: Testing of composite samples of fresh concrete obtained according to ASTM C 172 shall be performed according to the following requirements:

1. Testing Frequency: Obtain one composite sample for each day's pour of each concrete mixture exceeding 5 cu. yd. (4 cu. m), but less than 25 cu. yd. (19 cu. m), plus one set for each additional 50 cu. yd. (38 cu. m) or fraction thereof.
2. Testing Frequency: Obtain at least one composite sample for each 100 cu. yd. (75 cu. m) or fraction thereof of each concrete mixture placed each day.

    a. When frequency of testing will provide fewer than five compressive-strength tests for each concrete mixture, testing shall be conducted from at least five randomly selected batches or from each batch if fewer than five are used.

3. Slump: ASTM C 143/C 143M; one test at point of placement for each composite sample, but not less than one test for each day's pour of each concrete mixture. Perform additional tests when concrete consistency appears to change.
4. Air Content: ASTM C 231, pressure method, for normal-weight concrete; one test for each composite sample, but not less than one test for each day's pour of each concrete mixture.
5. Concrete Temperature: ASTM C 1064/C 1064M; one test hourly when air temperature is 40 deg F (4.4 deg C) and below and when 80 deg F (27 deg C) and above, and one test for each composite sample.
6. Unit Weight: ASTM C 567, fresh unit weight of structural lightweight concrete; one test for each composite sample, but not less than one test for each day's pour of each concrete mixture.
7. Compression Test Specimens: ASTM C 31/C 31M.

    a. Cast and laboratory cure two sets of two standard cylinder specimens for each composite sample.
    b. Cast and field cure two sets of two standard cylinder specimens for each composite sample.

8. Compressive-Strength Tests: ASTM C 39/C 39M; test one set of two laboratory-cured specimens at 7 days and one set of two specimens at 28 days.

    a. Test one set of two field-cured specimens at 7 days and one set of two specimens at 28 days.
    b. A compressive-strength test shall be the average compressive strength from a set of two specimens obtained from same composite sample and tested at age indicated.

9. When strength of field-cured cylinders is less than 85 percent of companion laboratory-cured cylinders, Contractor shall evaluate operations and provide corrective procedures for protecting and curing in-place concrete.
10. Strength of each concrete mixture will be satisfactory if every average of any three consecutive compressive-strength tests equals or exceeds specified compressive strength and no compressive-strength test value falls below specified compressive strength by more than 500 psi (3.4 MPa).
11. Test results shall be reported in writing to Architect, concrete manufacturer, and Contractor within 48 hours of testing. Reports of compressive-strength tests shall contain Project identification name and number, date of concrete placement, name of concrete

NOT FOR BIDDING

testing and inspecting agency, location of concrete batch in Work, design compressive strength at 28 days, concrete mixture proportions and materials, compressive breaking strength, and type of break for both 7- and 28-day tests.

12. Nondestructive Testing: Impact hammer, sonoscope, or other nondestructive device may be permitted by Architect but will not be used as sole basis for approval or rejection of concrete.
13. Additional Tests: Testing and inspecting agency shall make additional tests of concrete when test results indicate that slump, air entrainment, compressive strength, or other requirements have not been met, as directed by Architect. Testing and inspecting agency may conduct tests to determine adequacy of concrete by cored cylinders complying with ASTM C 42/C 42M or by other methods as directed by Architect.
14. Additional testing and inspecting, at Contractor's expense, will be performed to determine compliance of replaced or additional work with specified requirements.
15. Correct deficiencies in the Work that test reports and inspections indicate dos not comply with the Contract Documents.

E. Measure floor and slab flatness and levelness according to ASTM E 1155 (ASTM E 1155M) within 48 hours of finishing. Values to be documented and provided to Architect and Flooring Manufacturer prior to placing flooring.

END OF SECTION 033000

NOT FOR BIDDING

# SECTION 034900
# GLASS-FIBER REINFORCED CONCRETE

## PART 1 GENERAL

1.01 SECTION INCLUDES

A. Architectural precast glass-fiber-reinforced concrete (GFRC) cornices and entrance surrounds, manufactured to match calcium silicate stone..

B. Supports, anchors, and attachments.

1.02 RELATED REQUIREMENTS

A. Section 047313 - Calcium Silicate Manufactured Stone Masonry

B. Section 051200 - Structural Steel Framing: Placement of anchors specified in this section.

C. Section 054000 - Cold-Formed Metal Framing: Structural stud members.

D. Section 07 9200 - Joint Sealants: Application of backer rods or bond breakers and joint sealers.

1.03 REFERENCE STANDARDS

A. ASTM A36/A36M - Standard Specification for Carbon Structural Steel; 2014.

B. ASTM A153/A153M - Standard Specification for Zinc Coating (Hot-Dip) on Iron and Steel Hardware; 2016a.

C. ASTM A563 - Standard Specification for Carbon and Alloy Steel Nuts; 2007a (Reapproved 2014).

D. ASTM A563M - Standard Specification for Carbon and Alloy Steel Nuts [Metric]; 2007.

E. ASTM A653/A653M - Standard Specification for Steel Sheet, Zinc-Coated (Galvanized) or Zinc-Iron Alloy-Coated (Galvannealed) by the Hot-Dip Process; 2015.

F. ASTM C33/C33M - Standard Specification for Concrete Aggregates; 2013.

G. ASTM C150/C150M - Standard Specification for Portland Cement; 2015.

H. ASTM C260/C260M - Standard Specification for Air-Entraining Admixtures for Concrete; 2010a.

I. ASTM C494/C494M - Standard Specification for Chemical Admixtures for Concrete; 2013.

J. ASTM C618 - Standard Specification for Coal Fly Ash and Raw or Calcined Natural Pozzolan for Use in Concrete; 2015.

K. ASTM C979/C979M - Standard Specification for Pigments for Integrally Colored Concrete; 2010.

L. ASTM F436/F436M - Standard Specification for Hardened Steel Washers Inch and Metric Dimensions; 2016.

M. ASTM F3125/F3125M - Standard Specification for High Strength Structural Bolts, Steel and Alloy Steel, Heat Treated, 120 ksi (830 MPa) and 150 ksi (1040 MPa) Minimum Tensile Strength, Inch and Metric Dimensions; 2015a.

N. AWS D1.1/D1.1M - Structural Welding Code - Steel; 2015 (Errata 2016).

O. PCI MNL-117 - Manual for Quality Control for Plants and Production of Architectural Precast Concrete Products; 2007.

P. PCI MNL-128 - Recommended Practice for Glass Fiber Reinforced Concrete Panels; 2001, Fourth Edition.

NOT FOR BIDDING

1.04 PERFORMANCE REQUIREMENTS

A. Structural Performance: GFRC cornice and columns, including anchors, and connections, shall withstand the following design loads, as well as the effects of thermal- and moisture-induced volume changes, according to load factors and combinations established in PCI MNL 128, "Recommended Practice for Glass Fiber Reinforced Concrete Panel."
   1. Design Loads:
      a. Exterior GFRC: Lateral Loads not less than 50 psf inward and outward.
   2. Deflection: Design panel frames to withstand design loads without lateral deflections greater than 1/240 of wall span.
   3. Thermal Movements: Provide for thermal movements resulting from annual ambient temperature changes of 120 degF.
   4. Design cornice frames and connections to accommodate deflections and other building movements.

1.05 SUBMITTALS

A. Shop Drawings: Indicate locations, fabrication and installation details for GFRC components including the following:
   1. Structural analysis data signed and sealed by the qualified professional engineer responsible for their preparation.
   2. Reinforcement.
   3. Metal framing details.
   4. Connection details.
   5. Dimensions, and relationship to adjacent materials.
   6. Erection details, including the sequence for typical and special conditions, joint treatment.
   7. Repair procedures.

B. Samples: Submit two samples 6 inch by 10 inch in size illustrating surface color, finish and texture.

C. Manufacturer's Installation Instructions: Indicate surface cleaning instructions.

D. Designer's Qualification Statement.

E. Fabricator Qualifications.

1.06 QUALITY ASSURANCE

A. Designer Qualifications: Design units under direct supervision of a Professional Structural Engineer experienced in design of this Work and licensed in the State of Delaware.

B. Fabricator Qualifications: Certified by the Precast/Prestressed Concrete Institute Plant Certification Program; product Group G, Glass Fiber Reinforced Concrete or that participates in APA's Plant Certification Program and is certified for GFRC production.

C. Welding Qualifications: Qualify procedures and personnel according to AWS D1.1/Dl.lM, "Structural Welding Code--Steel," and AWS D1.3, "Structural Welding Code--Sheet Steel."

1.07 MOCK-UP

A. Construct one cornice as part of exterior wall assembly mockup. See Section 042000 and Drawings for requirements.

B. Locate where directed.

C. Mock-up may not remain as part of the Work.

NOT FOR BIDDING

1.08 PROJECT CONDITIONS

A. Coordinate the Work with installation of backup supporting structure, application of joint sealers.

1.09 DELIVERY, STORAGE, AND HANDLING

A. Handle units to position, consistent with their shape and design. Lift and support only from support points.

B. Lifting Device: Capable of maintaining unit shape during manufacture, storage, transportation, erection, and in position for fastening.

C. Blocking and Lateral Support During Transport and Storage: Clean, non-staining, without causing harm to exposed surfaces. Provide temporary lateral support to prevent bowing and warping. Place spacers in same location during transport and site storage.

D. Protect edges of units to prevent staining, chipping, or spalling of concrete.

**PART 2 PRODUCTS**

2.01 MANUFACTURERS

A. Glass-Fiber-Reinforced Concrete: Subject to compliance with the requirements of this Section, with special attention to the metal framing requirement, provide products from one of the following manufacturers:

1. ARC, Ltd.
2. Casting Design, Inc. Fort Worth, Texas.
3. Plaster Concepts
4. Formglas, Inc.
5. Basis of Design: Stromberg Architectural Products, Inc: www.strombergarchitectural.com.
6. Substitutions: See Section 016000 - Product Requirements.

2.02 GLASS-FIBER-REINFORCED CONCRETE UNITS

A. Glass-Fiber-Reinforced Concrete Units: Factory-fabricated, complying with PCI MNL-128, using rigid molds constructed to maintain unit panel uniform in shape, size and finish.

1. Design and fabricate to comply with applicable code(s).
2. Design to withstand dead loads, positive and negative wind loads, and erection forces.
3. Control deflection of units to maintain fit with adjacent construction and openings within their tolerances.
4. Design connections to accommodate building movement without damage to components, wracking of joint connections, breakage of seals, or moisture penetration.
5. Allow for adjustment of connections to accommodate misalignment of structure without permanent distortion.
6. Concrete Mix: Of strength to accommodate panel configuration, panel size and weight, and manufacturing criteria, air entrained.
7. Welding: Comply with AWS D1.1/D1.1M.
8. Appearance: Ensure exposed-to-view finish surfaces of units are uniform in color and appearance.

2.03 GFRC MATERIALS

A. Cement: ASTM C150/C150M Portland Type I - Normal; white color.

B. Concrete Aggregates: ASTM C33/C33M.

NOT FOR BIDDING

C. Sand for GFRC Backing: Washed and dried silica, complying with composition requirementsof ASTM C 144; passing No. 20 sieve with a maximum of 2 percent passing No. 100 sieve.

D. Water: Potable; free from deleterious material that may affect color stability, setting, or strength of GFRC and complying with the chemical limits of PCI MNL 130.

E. Reinforcement: Alkali resistant glass fiber rovings specifically formulated for use in concrete, with lengths varying from 1-1/2 to 2 inches with a minimum zirconia content of 16 percent complying with ASTM C 1666/C 1666M.

F. Admixtures: Comply with ASTM C260/C260M, ASTM C494/C494M, and ASTM C618.
   1. Metakaolin: ASTM C 618, Class N.
   2. Air-Entrainment Admixture: ASTM C 260, containing not more than 0.1 percent chloride ions.
   3. Chemical Admixtures: ASTM C 494/C 494M containing chloride ions are not permitted.

G. Polymer Curing Admixture: Acrylic thermoplastic copolymer dispersion complying with PCI MNL 130.

H. Color Additives: Pure, concentrated mineral pigments specifically intended for mixing into concrete and complying with ASTM C979/C979M.
   1. Color: To match calcium silicate stone in color and texture.

2.04 MOLD FABRICATION

A. Construct molds that will result in finished GFRC complying with profiles, dimensions, and tolerances indicated, without damaging GFRC during stripping. Construct molds to prevent water leakage and loss of cement paste.
   1. Coat contact surface with form-release agent.

B. Place form liners accurately to provide finished surface texture indicated. Provide solid backing and supports to maintain stability of liners during GFRC application.
   1. Coat contact surface with form-release agent.

C. Locate, place and secure flashing reglets accurately.

2.05 FRAMING MATERIALS

A. Metal Framing Members: Formed from hot-dipped galvanized steel sheet, ASTM A653/A653M, SS Grade 50 (340) Class 1, with G90/Z275 coating.

2.06 SUPPORT DEVICES

A. Connecting and Support Devices: ASTM A36/A36M steel; hot-dip galvanized in accordance with ASTM A153/A153M.

B. Bolts, Nuts, and Washers: ASTM F3125/F3125M heavy hex structural bolts, Type 1, with matching ASTM A563 (ASTM A563M) nuts, and washers as follows:
   1. Standard Washers: ASTM F436/F436M washers, in finish matching bolts.

C. Primer: Zinc rich oil alkyd.

2.07 ACCESSORIES

A. Reglets: Plastic shaped and flanged to remain in place once cast; foam plastic filled to eliminate concrete intrusion.

2.08 FABRICATION

A. Spray-up concrete mix in multiple passes; maintain consistent quality during manufacture.

B. Place metal framing members in position in mold.

NOT FOR BIDDING

C. Embed anchors, inserts, plates, angles, and other cast-in items as indicated on shop drawings.

D. Fabricate connecting devices, items fit to framing members, fasteners and accessories necessary for proper installation.

E. Locate hoisting devices to permit device removal after erection.

F. Cure units to minimize appearance blemishes such as non-uniformity, staining or surface cracking.

G. Identify each unit with corresponding code on erection drawings, in location not visible in finish work.

H. Exposed Non-Galvanized Steel Components: Clean surfaces of rust, scale, grease, and foreign matter; prime paint in two coats, except surfaces in direct contact with concrete or requiring field welding.

2.09 FABRICATION TOLERANCES

A. Manufacturing Tolerances: Manufacturer GFRC panels so each finished unit complies with PCI MNL 130 for dimension, position and tolerances.

2.10 FINISHES

A. Finish exposed-face surface of GFRC shall be free of joint marks, grain, or other obvious defects.

1. Surface Finish: match approved calcium silicate stone and approved sample panels.

**PART 3 EXECUTION**

3.01 EXAMINATION

A. Verify that building structure, anchors, devices, and openings are ready to receive work of this section.

3.02 PREPARATION

A. Provide for erection procedures and induced loads during erection. Maintain temporary bracing in place until final support is provided.

3.03 ERECTION

A. Coordinate installation with that of structural supports, backup, and opening framing, if any.

B. Erect units without damage to shape or finish. Replace or repair damaged panels.

C. Erect units level and plumb within allowable tolerances.

D. Align and maintain uniform horizontal and vertical joints as erection progresses.

E. When units require adjustment beyond design or tolerance criteria, discontinue affected work and advise Architect.

F. Site cutting of panels not permitted.

G. Weld units in place. Perform welding in accordance with AWS D1.1/D1.1M. Provide non-combustible shields during welding operations.

H. Touch-up field welds and scratched or damaged primed painted surfaces.

3.04 TOLERANCES

A. Maximum Variation from Plane of Location: 1/4 inch in 10 feet and 3/8 inch in 100 feet, non-cumulative.

B. Maximum Offset from True Alignment Between Two Connecting Units: 1/4 inch.

C. Maximum Out of Square: 1/8 inch in 10 feet, non-cumulative.

NOT FOR BIDDING

D. Variation From Dimensions Indicated on Shop Drawings: Plus or minus 1/8 inch.

E. Maximum Misalignment of Anchors, Inserts, Openings: 1/8 inch.

F. Bowing of Units: Length of Unit/360.

G. Exposed Joint Dimension: 1/2 inch plus or minus 1/4 inch.

H. Location of Reglets: 1/4 inch from true position.

3.05 FIELD QUALITY CONTROL

A. Perform water absorption test in accordance with PCI MNL-117.

3.06 PROTECTION

A. Protect installed units from damage.

**END OF SECTION**

NOT FOR BIDDING

# SECTION 042000
# UNIT MASONRY

## PART 1 GENERAL

1.01 SECTION INCLUDES

A. Concrete block.

B. Split-face concrete block.

C. Ground-face concrete block.

D. Clay facing brick.

E. Mortar and grout.

F. Reinforcement and anchorage.

G. Lintels.

H. Accessories.

1.02 RELATED REQUIREMENTS

A. Division 1 - Administrative Requirements: Preconstruction meeting.

B. Division 1 - Quality Requirements: The Owner will engage an Independent Testing and Inspection Agency to verify the adequacy of the Contractor's quality control.

1. Before concealing the work behind the brick veneer, obtain the required inspection from a representative of the Owner's independent testing and inspection agency.

C. Division 1 - Quality Requirements: Mock-up:

1. Construct mock-ups where indicated on the drawings, incorporating all components specified for the location.
2. Demolish mock-up when directed by Architect, and remove debris from the site.

D. Section 044313 - Stone Masonry Veneer: Stone Veneer at base of Calcium Silicate Masonry.

E. Section 047313 - Calcium Silicate Manufactured Stone Masonry

F. Section 055000 - Metal Fabrications: Loose steel lintels.

G. Section 071113 - Bituminous Dampproofing: Dampproofing masonry surfaces.

H. Section 071300 - Sheet Waterproofing: Waterproofing masonry surfaces.

I. Section 072100 - Thermal Insulation: Insulation for cavity spaces.

J. Section 076200 - Sheet Metal Flashing and Trim: Through-wall masonry flashings.

K. Section 078400 - Firestopping: Firestopping at penetrations of fire-rated masonry and at top of fire-rated walls.

L. Section 079200 - Joint Sealants: Sealing control and expansion joints.

1.03 TRIAL AND PAYMENT PROCEDURES

A. See Section 012300 - Alternates, for alternates affecting the work of this section.

1.04 REFERENCE STANDARDS

A. ACI 530/530.1/ERTA - Building Code Requirements and Specification for Masonry Structures and Related Commentaries; 2011.

B. ASTM A153/A153M - Standard Specification for Zinc Coating (Hot-Dip) on Iron and Steel Hardware; 2016a.

NOT FOR BIDDING

C. ASTM A615/A615M - Standard Specification for Deformed and Plain Carbon Steel Bars for Concrete Reinforcement; 2015.

D. ASTM A1064/A1064M - Standard Specification for Carbon-Steel Wire and Welded Wire Reinforcement, Plain and Deformed, for Concrete; 2015.

E. ASTM C90 - Standard Specification for Loadbearing Concrete Masonry Units; 2014.

F. ASTM C140/C140M - Standard Test Methods of Sampling and Testing Concrete Masonry Units and Related Units; 2014.

G. ASTM C144 - Standard Specification for Aggregate for Masonry Mortar; 2011.

H. ASTM C150/C150M - Standard Specification for Portland Cement; 2015.

I. ASTM C207 - Standard Specification for Hydrated Lime for Masonry Purposes; 2006 (Reapproved 2011).

J. ASTM C216 - Standard Specification for Facing Brick (Solid Masonry Units Made From Clay or Shale); 2014.

K. ASTM C270 - Standard Specification for Mortar for Unit Masonry; 2014a.

L. ASTM C404 - Standard Specification for Aggregates for Masonry Grout; 2011.

M. ASTM C476 - Standard Specification for Grout for Masonry; 2010.

N. ASTM C780 - Standard Test Method for Preconstruction and Construction Evaluation of Mortars for Plain and Reinforced Unit Masonry; 2012.

O. ASTM C979/C979M - Standard Specification for Pigments for Integrally Colored Concrete; 2010.

P. ASTM C1072 - Standard Test Method for Measurement of Masonry Flexural Bond Strength; 2013.

Q. ASTM C1148 - Standard Test Method for Measuring the Drying Shrinkage of Masonry Mortar; 1992a (Reapproved 2008).

R. ASTM C1314 - Standard Test Method for Compressive Strength of Masonry Prisms; 2014.

S. ASTM E514/E514M - Standard Test Method for Water Penetration and Leakage Through Masonry; 2014.

T. BIA Technical Notes No. 7 - Water Penetration Resistance – Design and Detailing; 2005.

U. BIA Technical Notes No. 13 - Ceramic Glazed Brick Exterior Walls; 2017.

V. TMS 402/602 - Building Code Requirements and Specification for Masonry Structures; 2016.

W. UL (FRD) - Fire Resistance Directory; current edition.

1.05 ADMINISTRATIVE REQUIREMENTS

A. Preinstallation Meeting: Convene a preinstallation meeting two weeks before starting work of this section; require attendance by all relevant installers.

B. Refer to Section 01 3000 - Administrative Requirements for additional information.

1.06 SUBMITTALS

A. Product Data: Provide data for masonry units, fabricated wire reinforcement, mortar, masonry accessories, and cleaning products including application .

B. Samples: Submit two samples of decorative block and facing brick units to illustrate color, texture, and extremes of color range.

NOT FOR BIDDING

C. Manufacturer's Certificate: Certify that masonry units meet or exceed specified requirements, including referenced material standards and fire ratings.

D. Shop Drawings: Provide shop drawings of vertical wall reinforcement and bond beam reinforcement. Submit, with copies to the Owner's Independent Testing and Inspection Agency, shop drawings for reinforcing detailing fabrication, bending, and placement of unit masonry reinforcing bars. Show details of construction, including dimensioned drawings, plans, elevations, sections, and details of components to be incorporated into Work including but not limited to, the following:
   1. Flashing System: Large-scale details for each element of flashing system showing layout, profiles, methods of joining, and anchorage details; including lintel units, shelf units, corner units, end dam units, drip edges, conditions showing interface and relationship to adjacent materials, and other special applications.
   2. Fabricated Flashing: Detail corner units, end-dam units, drip edges, and other special applications.
   3. Anchors, Ties, and Accessories: Show sizes, coursing, and locations.
   4. Reinforcing: For masonry reinforcing bars; comply with ACI 315 "Details and Detailing of Concrete Reinforcement"showing bar schedules, stirrup spacing, diagrams of bent bars, and arrangement of masonry reinforcement. Show elevations of reinforced walls.

1.07 INFORMATIONAL SUBMITTALS

A. Material Test Reports: For each type of masonry units, cementitious materials, and accessories required. Include data on material properties, material test reports substantiating compliance with requirements. For brick, include test report for efflorescence according to ASTM C 67.
   1. Provide test reports based on testing within previous two years.

B. Material Certificates: Submit material certificates for the following, signed by manufacturer and Contractor. Include statements of material properties indicating compliance with requirements including compliance with standards and type designations within standards.
   1. Each type of masonry unit.
   2. Cementitious materials. Include brand, type, and name of manufacturer. Provide certification from manufacturer that no admixtures have been added to cementitious materials.
   3. Grout mixes. Include description of type and proportions of ingredients.
   4. Each material and grade indicated for reinforcing bars.
   5. Each type and size of joint reinforcement.
   6. Each type and size of anchors, ties, and metal accessory.

C. Mix Designs: Submit material test reports for the Owner's Independent Testing and Inspection Agency, indicating and interpreting test results relative to compliance of the following prepared masonry materials with requirements.
   Include test reports for mortar mixes required to comply with property specification. Test according to ASTM C 109/C 109M for compressive strength, ASTM C 1506 for water retention, and ASTM C 91 for air content. Include description of type and proportions of mortar ingredients.
   2. Include test reports, according to ASTM C 1019 for grout mixes required to comply with compressive strength requirement. Include description of type and proportions of grout ingredients.

D. Manufacturer's Certificate: Certify that water repellent admixture manufacturer has certified masonry unit manufacturer as an approved user of water repellent admixture in the manufacture of concrete block.

NOT FOR BIDDING

E. Maintenance Materials: Furnish the following for Owner's use in maintenance of project.
   1. See Section 016000 - Product Requirements, for additional provisions.
   2. Extra Pre-Faced Units: 50 of each type, size, and color combination.

1.08 QUALITY ASSURANCE

A. Installer Qualifications: The unit masonry work to be by a single firm specializing in exterior wall masonry work, for a period of not less than 5 years, so that there will be undivided responsibility in this single firm for such work.
   1. The Installer must be experienced with work comparable to the work shown and specified and who has completed projects with a successful in-service performance for a period of not less than 5 years.
   2. The Installer shall engage experienced and qualified subcontractors to perform any part of the masonry work which he is not equipped or qualified to perform properly with his own forces.

B. Standards: Comply with the applicable provisions and recommendations of the following standards below, where standards conflict, the more stringent shall apply and where a conflict between any stated standard and a project specific requirement of the specifications arise, the more stringent provision shall prevail.
   1. National Concrete Masonry Association (NCMA) "TEK" Information Series.
   2. American Concrete Institute (ACI):
      a. ACI 530/ASCE 5/TMS 402: "Building Code Requirements for Masonry Structures."
      b. ACI 530.1/ASCE 6/TMS 602: "Specifications for Masonry Structures."
   3. Brick Industry Association (BIA) "Technical Notes on Brick Construction."
   4. Underwriters Laboratories, Inc. (UL) "Fire Resistance Ratings."
   5. American Society for Testing and Materials (ASTM) E 2266 “Standard Guide for Design and Construction of Low Rise FrameBuilding Wall Systems to Resist Water Intrusion.”

C. Source Limitations for Masonry Units: Obtain exposed masonry units of a uniform texture and color, through one source from a single manufacturer for each product required.

D. Source Limitations for Mortar Materials: Obtain mortar ingredients of a uniform quality, including color for exposed masonry, from a single manufacturer for each cementitious component and from one source or producer for each aggregate.

E. Owner’s Independent Testing and Inspection Agency: The Owner will engage a qualified independent testing and inspection agency to perform preconstruction testing indicated below for field quality control. Payment for these services will be made by Owner. Independent testing agency to coordinate submittal of "Special Inspections" testing documentation for State of Delaware (State) review and approval.
   The Contractor is responsible for the expense of testing or inspection resulting as a consequence of the following:
      a. Work not evidencing compliance with this specification.
      b. Testing to verify the adequacy of work done without prior notice, improper supervision, or contrary to standard construction practice.
   2. Contractor's Responsibilities:
      a. Furnish labor required to facilitate testing.
      b. Provide materials, samples and access to materials as required for testing.
      c. Provide a complete set of shop and erection drawings, including revisions to previous Architect reviewed submittals.
   3. Owner’s Independent Testing and Inspection Agency's Duties:

NOT FOR BIDDING

a. The Owner's Independent Testing and Inspection Agency shall conduct the following tests and inspections, interpret them, evaluate the results for compliance with the specifications, and report the findings to the Architect, Owner, Contractor, and Local Building Authority, as their interests may appear.
   1) Inspection and testing shall be in accordance with ACI requirements for masonry (ACI 530 and ACI 503.1) for the following inspections:
      (a) Observation, sampling and placing of masonry units used in all reinforced masonry construction.
      (b) Inspection reports during reinforced masonry erection.
      (c) Observations of reinforcement condition, size and placement for compliance with ACI 530.
      (d) Ambient temperature during reinforced masonry erection.
      (e) Inspection of reinforced masonry materials to verify compliance with ACI 530.1.
      (f) Prism testing of masonry.
      (g) Observation of proportioning, mixing, consistency of mortar and grout for compliance with ACI 530.1.
      (h) Observation of application of mortar, grout and masonry units for compliance with ACI 530.1.
      (i) Observation of installation of anchors for compliance with ACI 530.
b. Tests shall be conducted at the start of the job, using materials and mixes sampled at point of deposit.
c. Testing of Mortar: The Owner's Independent Testing Laboratory shall verify mix consistency by daily testing in accordance with ASTM C780. Test shall establish specific and overall performance characteristics of the mortar system. Test reports shall be submitted to the Owner / Architect for review under the provisions of the Division 01 section under "General Requirements".
d. Test of grout for reinforced masonry for compliance with ASTM C 476 requirements for the types specified and strength shown, conduct and report the following:
   1) Compressive strength (ASTM C 1019); lab cure and break at a time increment of one at 7 days, and two at 28 days; a minimum of 1 field test shall be made for each 5000 square feet of reinforced CMU wall. Make no less than 3 tests.
e. Preliminary Test of Concrete Masonry Design Strength: With sufficient time, and not less than 28 days prior to the start of reinforced masonry construction, test for the compressive concrete masonry design strength (f'm) as specified. The value of f'm shall be determined by tests of masonry assemblies (prisms) in accordance with ACI 530.1. Not less than five prisms shall be taken as 8 inches for reinforced CMU.
f. Field Tests of Concrete Masonry Design Strength: During construction, the value of the compressive concrete masonry design strength (f'm) shall be verified by field tests in accordance with the ACI and ASTM standards. A minimum of one field test shall be made for every 5000 square feet of reinforced CMU wall. Not less than three prisms shall be made for each field test. The thickness of the prisms shall be taken as 8 inches for the reinforced CMU.

F. Fire-Resistance Ratings: Where indicated, provide materials and construction identical to those of assemblies with fire-resistance ratings determined per ASTM E 119 by a testing and inspecting agency, by equivalent concrete masonry thickness, or by other means, as acceptable to authorities having jurisdiction.

NOT FOR BIDDING

1.09 MOCK-UP

A. Construct exterior wall assembly mockup. Refer to Drawings for configuration. Include:
   1. Mortar and accessories.
   2. Structural backup, including sheathing.
   3. Flashings (with lap joint, corner, and end dam) .
   4. Spray foam wall insulation.
   5. Watertable and string course.
   6. Stone veneer base course
   7. GFRC cornice
   8. Control joint
   9. Sample window units with calcium silicate stone window sill.
   10. Corner quoins detail
   11. Metal panel system with coping.

B. Refer to Section 014000 - Quality Requirements for additional information.

C. Locate where directed.

D. Mock-up may not remain as part of the Work.

1.10 DELIVERY, STORAGE, AND HANDLING

A. Deliver, handle, and store masonry units by means that will prevent mechanical damage and contamination by other materials.

B. Store masonry units on elevated platforms in a dry location. If units are not stored in an enclosed location, cover tops and sides of stacks with waterproof sheeting, securely tied. If units become wet, do not install until they are dry.
   1. Deliver masonry veneer units to the jobsite on covered banded pallets with cardboard between layers. Store units in single stacks on level ground and cover with waterproof covering to protect the units from inclement weather. Handle masonry veneer units carefully to avoid breakage and damage to the finished surfaces.

C. Store cementitious materials on elevated platforms, under cover, and in a dry location. Do not use cementitious materials that have become damp.

D. Store aggregates where grading and other required characteristics can be maintained and contamination avoided. During cold weather stockpile aggregates so that it may be possible to heat them for use in mixing mortar in compliance with ACI recommendations for cold weather masonry practices.

E. Deliver pre-blended dry mortar mix, if used for the project, in moisture-resistant containers designed for use with dispensing silos. Store pre-blended dry mortar mix in delivery containers on elevated platforms, under cover, and in a dry location or in covered weatherproof dispensing silos.

F. Store masonry accessories, including metal items, to prevent corrosion and accumulation of dirt and oil. Do not use metal reinforcing or ties having loose rust or other coatings, including ice, that will reduce rust or destroy bond.

1.11 PROJECT CONDITIONS

A. Protection of Masonry: During construction, cover tops of walls, projections, and sills with waterproof sheeting at end of each day's work. Cover partially completed masonry when construction is not in progress. Prevent excess moisture from entering work in progress.
   1. Extend cover a minimum of 24 inches (600 mm) down both sides and hold cover securely in place.

NOT FOR BIDDING

2. Protect door and window frames and exposed metal flashings from damage.

B. Stain Prevention: Prevent mortar and soil from staining the face of masonry to be left exposed. Immediately remove mortar and soil that come in contact with such masonry.
1. Protect base of walls from rain-splashed mud and from mortar splatter by spreading coverings on ground and over wall surface.
2. Protect sills, ledges, and projections from mortar droppings.
3. Protect surfaces of window and door frames, as well as similar products with painted and integral finishes, from mortar droppings.
4. Turn scaffold boards near the wall on edge at the end of each day to prevent rain from splashing mortar and dirt onto completed masonry.

C. Cold-Weather Requirements: Do not use metal reinforcing or ties having loose rust or other coatings that will reduce or destroy bond. Do not use frozen materials or materials mixed or coated with ice or frost. Do not build on frozen substrates. Remove and replace unit masonry damaged by frost or by freezing conditions. Comply with cold-weather construction requirements contained in ACI 530.1/ASCE 6 and ACI 530/ASCE 5 and the following requirements:
1. If air temperature falls below 40 deg F, mixing water shall be heated.
2. If the air temperature falls between 20 deg F and 32 deg F inclusively, sand and water shall be heated.
3. If the air temperature falls below 20 deg F, in addition to the requirements of the preceding sub-paragraph, masonry units shall be heated, and heated enclosures shall be used with a minimum temperature of 40 deg F.
4. Masonry shall be protected from freezing for 24 hours after laying.

D. Hot-Weather Requirements: When ambient temperature exceeds 100 deg F (38 deg C), or 90 deg F (32 deg C) with a wind velocity greater than 8 mph (13 km/h), do not spread mortar beds more than 48 inches (1200 mm) ahead of masonry. Set masonry units within one minute of spreading mortar. Comply with hot-weather construction requirements contained in ACI 530.1/ASCE 6/TMS 602.

1.12 DEFINITIONS

A. Exterior: Areas exposed to the elements and areas located in unconditioned spaces

B. Interior: Areas located in conditioned spaces

**PART 2 PRODUCTS**

2.01 CONCRETE MASONRY UNITS

A. Concrete Block: Comply with referenced standards and as follows:
1. Size: Standard units with nominal face dimensions of 16 by 8 inches and nominal depths as indicated on drawings for specific locations.
2. Special Shapes: Provide non-standard blocks configured for corners, lintels, control joint edges, jambs, sash, acoustical units, and other detailed conditions.
3. Load-Bearing Units: ASTM C90, lightweight.
   a. Hollow block, as indicated.

B. Decorative Concrete Masonry Units
1. Ground Face Block: ASTM C 90:
   a. Size:
      1) Size: Standard units with nominal face dimensions of 16 x 8 inches and nominal depths as indicated on the drawings for specific locations.
   b. Pattern and Texture:

NOT FOR BIDDING

1) Pattern: ground face finish.
c. Color: To be selected from full range of manufacturer's standard colors.
1) Ground Face Type 1: To be selected from manufacturer's standard range.
2) Split Face Type 1: Nitterhouse Masonry Products, Architectural Masonry Split Face. Color: J-12.
2. Shapes: Provide special shapes indicated, with exposed surfaces matching exposed faces of adjacent units unless otherwise indicated.
3. Manufacturers:
a. Basis of Design Ground Face Product: Oldcastle Building Products, Trenwyth Trendstone.
1) Subject to compliance with requirements, products by the following manufacturers are also acceptable:
(a) New Holland Concrete
(b) Fizzano Brothers; Groundface
b. Substitutions: See Section 016000 - Product Requirements.

C. Units with Integral Water Repellent: Provide exterior concrete block units as specified in this section with polymeric liquid admixture added to concrete masonry units at the time of manufacture.
1. Performance of Units with Integral Water Repellent:
a. Water Permeance: When tested per ASTM E514/E514M and for a minimum of 72 hours.
1) No water visible on back of wall above flashing at the end of 24 hours.
2) No flow of water from flashing equal to or greater than 0.032 gallons per hour at the end of 24 hours.
3) No more than 25 percent of wall area above flashing visibly damp at end of test.
b. Flexural Bond Strength: ASTM C1072; minimum 10 percent increase.
c. Compressive Strength: ASTM C1314; maximum 5 percent decrease.
d. Drying Shrinkage: ASTM C1148; maximum 5 percent increase in shrinkage.
2. Use only in combination with mortar that also has integral water repellent admixture.
3. Use water repellent admixtures for masonry units and mortar by a single manufacturer.

2.02 BRICK UNITS

A. Facing Brick: ASTM C216, Type FBS Smooth, Grade SW.
1. Basis of Design Manufacturer: Watsontown Brick Company: www.watsontown.com.
Color 1: Atlantic Series, Burtonfield (M), Sanded KT.
b. Color 2: Atlantic Series, Belvidere KT.
2. Other approved manufacturers/products:
a. Color 1:
1) The Belden Brick Company, Modular Commodore Velour A.
2) Taylor Clay Products, Inc., #317 Red Modular Wirecut.
b. Color 2:
1) Interstate Brick, Midnight Black, modular.
c. Substitutions: See Section 016000 - Product Requirements.
3. Actual size: 15-5/8" long x 3-5/8" high, x 3-5/8" deep.
4. Special shapes: Molded units as required by conditions indicated, unless standard units can be sawn to produce equivalent effect:
a. Corner brick units (custom angle).
b. Soldier course units with solid corners.

NOT FOR BIDDING

2.03 MORTAR AND GROUT MATERIALS

A. Masonry Cement: not permitted.

B. Portland Cement: ASTM C150/C150M, Type Ior Type II, without air entrainment.

C. Hydrated Lime: ASTM C207, Type S.

D. Mortar Aggregate: ASTM C144: sand.

E. Grout Aggregate: ASTM C404.

F. Pigments for Colored Mortar: Pure, concentrated mineral pigments specifically intended for mixing into mortar and complying with ASTM C979/C979M.
   1. Color(s): As selected by Architect from manufacturer's full range.

G. Water: Clean and potable.

H. Accelerating Admixture: Not permitted.

I. Integral Water Repellent Admixture for Mortar: Polymeric liquid admixture added to mortar at the time of manufacture.
   1. Use only in combination with concrete masonry units manufactured with integral water repellent admixture.
   2. Use only water repellent admixture for mortar from the same manufacturer as water repellent admixture in masonry units.
   3. Meet or exceed performance specified for water repellent admixture used in masonry units.
      a. Grace Construction Products, a unit of W. R. Grace & Co. - Conn.; Dry-Block Mortar Admixture.
      b. Master Builders, Inc.; Rheopel.
      c. Amerimix, an Oldcastle brand; AMX 410: www.amerimix.com.

2.04 REINFORCEMENT AND ANCHORAGE

A. Manufacturers:
   1. Blok-Lok Limited: www.blok-lok.com.
   2. Hohmann & Barnard, Inc (including Dur-O-Wal brand): www.h-b.com.
   3. WIRE-BOND: www.wirebond.com/#sle.

B. Reinforcing Steel: ASTM A615/A615M, Grade 60 (60,000 psi), deformed billet bars; uncoated.

C. Joint Reinforcement: Use ladder type joint reinforcement where vertical reinforcement is involved and truss type elsewhere, unless otherwise indicated.

D. Single Wythe Joint Reinforcement: Truss or ladder type; ASTM A1064/A1064M steel wire, hot dip galvanized after fabrication to ASTM A153/A153M, Class B; 0.1483 inch side rods with 0.1483 inch cross rods; width as required to provide not more than 1 inch and not less than 1/2 inch of mortar coverage on each exposure. . Provide in lengths of not less than 10 feet (3 m),with prefabricated corner and tee units.

E. Multiple Wythe Joint Reinforcement: Truss type; fabricated with moisture drip; ASTM A1064/A1064M steel wire, hot dip galvanized after fabrication to ASTM A153/153M, Class B; 0.1483 inch side rods with 0.1483 inch cross rods; width as required to provide not more than 1 inch and not less than 1/2 inch of mortar coverage on each exposure. Provide in lengths of not less than 10 feet (3 m),with prefabricated corner and tee units.

F. Adjustable Multiple Wythe Joint Reinforcement: Truss type with adjustable ties spaced at 16 in on center ASTM A1064/A1064M steel wire, hot dip galvanized after fabrication to ASTM

NOT FOR BIDDING

A153/153M, Class B; 0.1483 inch side rods with 0.1483 inch cross rods and adjustable components of 0.1875 inch wire; width of components as required to provide not more than 1 inch and not less than 1/2 inch of mortar coverage from each masonry face. Provide in lengths of not less than 10 feet (3 m),with prefabricated corner and tee units.

1. Vertical adjustment: Not less than 3-1/2 inches.

G. Flexible Anchors: 2-piece anchors that permit differential movement between masonry and building frame, sized to provide not less than 5/8 inch of mortar coverage from masonry face.
   1. Steel frame: Crimped wire anchors for welding to frame, 0.25 inch thick, with trapezoidal wire ties 0.1875 inch thick, hot dip galvanized to ASTM A 153/A 153M, Class B.

H. Two-Piece Wall Ties: Formed steel wire, 0.1875 inch thick, adjustable, eye and pintle type, stainless steel, sized to provide not more than 1 inch and not less than 1/2 inch of mortar coverage from masonry face and to allow vertical adjustment of up to 1-1/4 in.

I. Masonry Veneer Anchors: 2-piece anchors that permit differential movement between masonry veneer and structural backup, Stainless Steel Wire: ASTM A 580/A 580M, AISI Type 304 and / or Stainless Steel Sheet: ASTM A 167, A 240, or A 666, AISI Type 316..
   1. Anchor plates: Not less than.093 inch thick, designed for fastening to structural backup through sheathing by two fasteners.
   2. Pintles: Trapezoidal, or rectangular shape shape 0.1875 inch thick.
   3. Vertical adjustment: Not less than 2 inches.
   4. Manufacturers:
      a. HB-200-X anchor by Hohmann & Barnard, Inc.(/www.h-b.com)

2.05 FLASHINGS

A. See Section 076200 - Sheet Metal Flashing and Trim.

2.06 ACCESSORIES

A. Preformed Control Joints: Rubber material. Provide with corner and tee accessories, fused joints.

B. Joint Filler: Closed cell polyvinyl chloride; oversized 50 percent to joint width; self expanding.

C. Cavity Mortar Control: Semi-rigid polyethylene or polyester mesh panels, sized to thickness of wall cavity, duel level, trapezoidal shape and designed to prevent mortar droppings from clogging cavity weeps and allow proper cavity drainage.
   1. Mortar Diverter: Semi-rigid mesh designed for installation at flashing locations.
      a. Manufacturers:
         1) Mortar Net Solutions; MortarNet with Insect Barrier: www.mortarnet.com.
      b. Locations: At flashing locations in brick veneer walls.

D. Cavity Weeps : Polyester mesh.
   Manufacturers:
   a. CavClear/Archovations, Inc: www.cavclear.com/#sle.
   b. Mortar Net Solutions: www.mortarnet.com.
   c. Colors: selected from manufacturers standard range.

E. Steel Shelf Angles and Lintels: galvanized, see Section 051200 - Structural Steel Framing and Section 055000 - Metal Fabrications.

F. Reinforcing Bar Positioners: Wire units designed to fit into mortar bed joints spanning masonry unit cells with loops for holding reinforcing bars in center of cells. Units are formed

NOT FOR BIDDING

from 0.142inch (3.6mm) steel wire, hot-dip galvanized after fabrication. Provide units with either two loops or four loops as needed for number of bars indicated.

2.07 MORTAR AND GROUT MIXES

A. Mortar for Unit Masonry: ASTM C270, using the Proportion Specification.
   1. Masonry below grade and in contact with earth: Type S.
   2. Exterior, loadbearing masonry: Type S.
   3. Exterior, non-loadbearing masonry: Type N.
   4. Interior, loadbearing masonry: Type S.
   5. Interior, non-loadbearing masonry: Type N.

B. Mortar Type S: minimum 1800 psi, ASTM C 270.

C. Mortar Type N: One (1) part Portland Cement, one (1) part hydrated lime and six (6) parts sand.

D. Colored Mortar: Proportion selected pigments and other ingredients to match Architect's sample, without exceeding manufacturer's recommended pigment-to-cement ratio.

E. Grout: ASTM C476; consistency required to fill completely volumes indicated for grouting; fine grout for spaces with smallest horizontal dimension of 2 inches or less; coarse grout for spaces with smallest horizontal dimension greater than 2 inches. Use grout of type indicated or, if not otherwise indicated, of type (fine or coarse) that will comply with Table 1.15.1 of ACI 530.1/ASCE 6/TMS 602 and ACI 530/ASCE 5 for dimensions of grout spaces and pour height. Provide grout with a slump of 8 to 11 inches as measured according to ASTM C 143/C 143M.

F. Admixtures: Add to mixture at manufacturer's recommended rate and in accordance with manufacturer's instructions; mix uniformly.

G. Mixing: Use mechanical batch mixer and comply with referenced standards.

2.08 SOURCE QUALITY CONTROL

A. Owner may engage a qualified independent testing agency to perform source quality-control testing indicated below. Payment for these services will be made by Owner.

B. Brick Tests: For each type and grade of brick indicated, units will be tested according to ASTM C 67.

C. Concrete Masonry Unit Tests: For each type of concrete masonry unit indicated, units will be tested according to ASTM C 140.

**PART 3 EXECUTION**

3.01 EXAMINATION

A. Verify that field conditions are acceptable and are ready to receive masonry.

B. Verify that related items provided under other sections are properly sized and located.

C. Verify that built-in items are in proper location, and ready for roughing into masonry work.

3.02 PREPARATION

A. Direct and coordinate placement of metal anchors supplied for installation under other sections.

B. Provide temporary bracing during installation of masonry work. Maintain in place until building structure provides permanent bracing.

NOT FOR BIDDING

3.03 INSTALLATION - GENERAL

A. Comply with ACI 530.1/ASCE 6, ACI 530/ASCE 5, and other requirements indicated applicable to each type of installation included in Project.

B. Use full size units without cutting, if possible.
   1. If cutting is required to provide a continuous pattern or to fit adjoining construction, cut units with motor-driven saws; provide clean, sharp, unchipped edges.
   2. Allow units to dry before laying unless wetting of units is specified.
   3. Install cut units with cut surfaces and, where possible, cut edges concealed.

C. Select and arrange units for exposed unit masonry to produce a uniform blend of colors and textures.
   1. Mix units from several pallets as they are placed.

D. Wetting of Brick:
   1. Wet brick before laying if initial rate of absorption exceeds 30 g/30 sq. in. per minute when tested per ASTM C 67.
   2. Allow units to absorb water so they are damp but not wet at time of laying.

E. Cover tops of all partially completed walls at end of day to protect completed work and prevent water from entering the cavity.

F. Grouting: Do not place grout until entire height of masonry to be grouted has attained enough strength to resist grout pressure.
   1. Comply with requirements in ACI 530.1/ASCE 6/TMS 602 for cleanouts and for grout placement, including minimum grout space and maximum pour height.

3.04 COLD AND HOT WEATHER REQUIREMENTS

A. Comply with requirements of ACI 530/530.1/ERTA or applicable building code, whichever is more stringent.

3.05 COURSING

A. Establish lines, levels, and coursing indicated. Protect from displacement.

B. Maintain masonry courses to uniform dimension. Form vertical and horizontal joints of uniform thickness.

C. Concrete Masonry Units:
   1. Bond: Running.
   2. Coursing: One unit and one mortar joint to equal 8 inches.
   3. Mortar Joints: Concave.

D. Brick Units:
   1. Bond: Running.
   2. Coursing: Two units and two mortar joints to equal 8 inches.
   3. Mortar Joints: Concave.

3.06 PLACING AND BONDING

A. Lay solid masonry units in full bed of mortar, with full head joints, uniformly jointed with other work.

B. Lay hollow masonry units with face shell bedding on head and bed joints.

C. Buttering corners of joints or excessive furrowing of mortar joints is not permitted.

D. Remove excess mortar and mortar smears as work progresses.

NOT FOR BIDDING

E. Remove excess mortar with water repellent admixture promptly. Do not use acids, sandblasting or high pressure cleaning methods.

F. Interlock intersections and external corners.

G. Do not shift or tap masonry units after mortar has achieved initial set. Where adjustment must be made, remove mortar and replace.

H. Perform job site cutting of masonry units with proper tools to provide straight, clean, unchipped edges. Prevent broken masonry unit corners or edges.

I. Cut mortar joints flush where wall tile is scheduled, cement parging is required, or resilient base is scheduled. Use square outside corners where wall tile is scheduled, corner guards are shown. Use bullnose outside corners at typical outside CMU corner.

J. Isolate masonry partitions from vertical structural framing members with a control joint as indicated.

K. Isolate top joint of masonry partitions from horizontal structural framing members and slabs or decks with compressible joint filler.

3.07 WEEPS

A. Install weeps in veneer and cavity walls at 16 inches on center horizontally above through-wall flashing, above shelf angles and lintels, and at bottom of wall.

B. Place weeps directly on flashing.

C. Do not strike mortar across bottom of weep.
   1. If mortar is struck across weep, remove and replace weep.

3.08 CAVITY MORTAR CONTROL

A. Do not permit mortar to drop or accumulate into cavity air space or to plug weep/cavity vents.

B. For cavity walls, build inner wythe ahead of outer wythe to accommodate accessories.

C. Install cavity mortar diverter at base of cavity full width of air space and at other flashing locations as recommended by manufacturer to prevent mortar droppings from blocking weep/cavity vents.

3.09 REINFORCEMENT AND ANCHORAGE - GENERAL, SINGLE WYTHE MASONRY, AND CAVITY WALL MASONRY

A. Unless otherwise indicated on drawings or specified under specific wall type, install horizontal joint reinforcement 16 inches on center.

B. Place masonry joint reinforcement in first and second horizontal joints above and below openings. Extend minimum 16 inches each side of opening.

C. Place continuous joint reinforcement in first and second joint below top of walls.

D. Lap joint reinforcement ends minimum 6 inches.

E. Reinforce joint corners and intersections with strap anchors 16 inches on center.

F. Fasten anchors to structural framing and embed in masonry joints as masonry is laid. Unless otherwise indicated on drawings or closer spacing is indicated under specific wall type, space anchors at maximum of 16 inches horizontally and 16 inches vertically.

3.10 REINFORCEMENT AND ANCHORAGE - SINGLE WYTHE MASONRY

A. Install horizontal joint reinforcement 16 inches on center.

B. Place masonry joint reinforcement in first and second horizontal joints above and below openings. Extend minimum 16 inches each side of opening.

NOT FOR BIDDING

C. Place continuous joint reinforcement in first and second joint below top of walls.

D. Lap joint reinforcement ends minimum 6 inches.

3.11 REINFORCEMENT AND ANCHORAGE - MASONRY VENEER

A. Masonry Back-Up: Embed anchors to bond veneer at maximum 16 inches on center vertically and 16 inches on center horizontally. Place additional anchors at perimeter of openings and ends of panels, so maximum spacing of anchors is 8 inches on center.

B. Stud Back-Up: Secure veneer anchors to stud framed back-up and embed into masonry veneer at maximum 16 inches on center vertically and 16 inches on center horizontally. Place additional anchors at perimeter of openings and ends of panels, so maximum spacing of anchors is 8 inches on center.

3.12 REINFORCEMENT AND ANCHORAGES - MULTIPLE WYTHE UNIT MASONRY

A. Install horizontal joint reinforcement 16 inches on center.

B. Place masonry joint reinforcement in first and second horizontal joints above and below openings. Extend minimum 16 inches each side of opening.

C. Place continuous joint reinforcement in first and second joint below top of walls.

D. Lap joint reinforcement ends minimum 6 inches.

E. Support and secure reinforcing bars from displacement. Maintain position within 1/2 inch of dimensioned position.

F. Fasten anchors to structural framing and embed in masonry joints as masonry is laid. Space anchors at maximum of 16 inches horizontally and 16 inches vertically.

3.13 MASONRY FLASHINGS

A. Whether or not specifically indicated, install masonry flashing to divert water to exterior at all locations where downward flow of water will be interrupted.

1. Extend flashings full width at such interruptions and at least 6 inches, minimum, into adjacent masonry or turn up flashing ends at least 1 inch, minimum, to form watertight pan at non-masonry construction.
2. Remove or cover protrusions or sharp edges that could puncture flashings.
3. Seal lapped ends with a minimum of two beads of continuous sealant from leading edge of horizontal surface across and up entire height of vertical/sloped surface. Seal penetrations of flashing before covering with mortar.
4. Fold flashing to create end dams at discontinuous ends. Turn up one course.
5. Seal penetrations of flashing materials at cast stone and other anchors with compatible sealant or mastic.

B. Terminate flashing up 8 inches minimum on vertical surface of backing:

1. Install vertical leg of flashing behind water-resistive barrier over backing.
2. Anchor vertical leg of flashing into backing with a termination bar and sealant.

C. Install flashing in accordance with manufacturer's instructions and BIA Technical Notes No. 7.

D. Extend metal flashings flush with the exterior face of masonry. Install flashing in two beads of butyl joint sealer Type 3 below flashing to prevent moisture migration under flashing. Refer to Section 079200 - Joint Sealants.

E. Support flexible flashings across gaps and openings.

F. Lap end joints of metal flashings at least 6 inches (152 mm) and seal watertight with Sealant Type 3.

NOT FOR BIDDING

1. Refer to Sections 076200 - Sheet Metal Flashing and Trim and 079200 - Joint Sealants.

3.14 LINTELS

A. Refer to structural drawings for lintel requirements.

B. Install loose steel lintels over openings.

C. Maintain minimum 8 inch bearing on each side of opening.

3.15 GROUTED COMPONENTS

A. Reinforce bond beams as noted on the Contract Drawings.

B. Lap splices minimum 24 bar diameters.

C. Support and secure reinforcing bars from displacement. Maintain position within 1/2 inch of dimensioned position.

D. Place and consolidate grout fill without displacing reinforcing.

E. At bearing locations, fill masonry cores with grout for a minimum 12 inches either side of opening.

F. Limit height of vertical grout pours to not more than 60 inches (1520 mm).

3.16 CONTROL AND EXPANSION JOINTS

A. Do not continue horizontal joint reinforcement through control or expansion joints.

B. Form control joint with a sheet building paper bond breaker fitted to one side of the hollow contour end of the block unit. Fill the resultant core with grout fill. Rake joint at exposed unit faces for placement of backer rod and sealant.

C. Size control joints 3/8 inch wide and deep.

D. Form expansion joint as detailed on drawings.

3.17 BUILT-IN WORK

A. As work progresses, install built-in metal door frames, window frames, anchor bolts, plates, and louvers and other items to be built into the work and furnished under other sections.

B. Install built-in items plumb, level, and true to line.

C. Bed anchors of metal door and glazed frames in adjacent mortar joints. Fill frame voids solid with grout.

1. Fill adjacent masonry cores with grout minimum 12 inches from framed openings.

D. Do not build into masonry construction organic materials that are subject to deterioration.

3.18 TOLERANCES

A. Maximum Variation from Alignment of Columns: 1/4 inch.

B. Maximum Variation From Unit to Adjacent Unit: 1/16 inch.

C. Maximum Variation from Plane of Wall: 1/4 inch in 10 ft and 1/2 inch in 20 ft or more.

D. Maximum Variation from Plumb: 1/4 inch per story non-cumulative; 1/2 inch in two stories or more.

E. Maximum Variation from Level Coursing: 1/8 inch in 3 ft and 1/4 inch in 10 ft; 1/2 inch in 30 ft.

F. Maximum Variation of Mortar Joint Thickness: Head joint, minus 1/4 inch, plus 3/8 inch.

G. Maximum Variation from Cross Sectional Thickness of Walls: 1/4 inch.

NOT FOR BIDDING

3.19 CUTTING AND FITTING

A. Cut and fit for chases, pipes, conduit, sleeves, grounds, and other items. Coordinate with other sections of work to provide correct size, shape, and location.

B. Obtain approval prior to cutting or fitting masonry work not indicated or where appearance or strength of masonry work may be impaired.

3.20 FIELD QUALITY CONTROL

A. An independent testing agency will perform field quality control tests, as specified in Section 014000 - Quality Requirements.

B. Concrete Masonry Unit Tests: Test each variety of concrete unit masonry in accordance with ASTM C140/C140M for compliance with requirements of this specification.

C. Mortar Tests: Test each type of mortar in accordance with ASTM C780, testing with same frequency as masonry samples.

3.21 CLEANING

A. Remove excess mortar and mortar droppings.

B. Replace defective mortar. Match adjacent work.

C. Clean soiled surfaces with cleaning solution.

D. Use non-metallic tools in cleaning operations.

3.22 PROTECTION

A. Without damaging completed work, provide protective boards at exposed external corners that are subject to damage by construction activities.

NOT FOR BIDDING

# SECTION 044313
# STONE MASONRY VENEER

## PART 1 GENERAL

1.01 SECTION INCLUDES

A. Cut stone veneer at base of calcium silicate exterior walls.

B. Metal anchors and accessories.

C. Setting mortar.

1.02 RELATED REQUIREMENTS

A. Section 042000 - Unit Masonry: Joint reinforcement, Ties, Anchors, and Mortar.

B. Section 047313 - Calcium Silicate Manufactured Stone Masonry

C. Section 076200 - Sheet Metal Flashing and Trim: Flashings.

D. Section 079200 - Joint Sealants: Sealing joints indicated to be left open for sealant.

1.03 REFERENCE STANDARDS

A. ACI 530/530.1/ERTA - Building Code Requirements and Specification for Masonry Structures and Related Commentaries; 2011.

B. ASTM A666 - Standard Specification for Annealed or Cold-Worked Austenitic Stainless Steel Sheet, Strip, Plate, and Flat Bar; 2015.

C. ASTM C615/C615M - Standard Specification for Granite Dimension Stone; 2011.

D. ACI 530/530.1/ERTA - Building Code Requirements and Specification for Masonry Structures and Related Commentaries; 2011.

E. NBGQA (SPEC) - Specifications for Architectural Granite; National Building Granite Quarries Association, Inc.; www.nbgqa.com; 2007.

1.04 ADMINISTRATIVE REQUIREMENTS

A. Preinstallation Meeting: See Section 042000 - Unit Masonry.

1.05 SUBMITTALS

A. See Section 013000 - Administrative Requirements, for submittal procedures.

B. Product Data: Provide data on stone units, mortar, and reinforcement.

C. Samples: Submit two stone samples, 8 inches square minimum, illustrating color range, texture and markings.

D. Stone Fabricator's Qualification Statement.

1.06 QUALITY ASSURANCE

A. Stone Fabricator Qualifications: Company specializing in fabricating cut stone with minimum ten years of documented experience.

1.07 MOCK-UP

A. Provide stone masonry veneer base course as part of exterior wall assembly mockup. See Section 042000 and Drawings for requirements.

B. See Section 014000 - Quality Requirements for additional requirements.

C. Locate where directed.

D. Mock-up may not remain as part of the Work.

NOT FOR BIDDING

1.08 DELIVERY, STORAGE, AND HANDLING

A. Protect stone from discoloration during storage on site.

1.09 FIELD CONDITIONS

A. Cold Weather Requirements: Comply with requirements of ACI 530/530.1/ERTA or applicable building code, whichever is more stringent.

**PART 2 PRODUCTS**

2.01 STONE

A. Granite, complying with ASTM C615/C615M:
   1. Acceptable Producers:
      a. Cold Spring Granite Inc.; Sierra White: www.coldspringgranite.com.
      b. New England Stone; Bethel White: www.newenglandstone.com.
      c. North Carolina Granite Corporation; Bethel White: www.ncgranite.com.

B. Surface Texture: Thermal.

C. Color: White/Grey.

2.02 MORTAR

A. Setting and Pointing Mortar: ASTM C270, Type N, using the Proportion Method as specified in Section 04 2000.

2.03 ACCESSORIES

A. Flashings: Stainless steel type as specified in Section 076200.

B. Weep/Cavity Vents: See Section 042000.

C. Cleaning Solution: Type that will not harm stone, joint materials, or adjacent surfaces.

2.04 STONE FABRICATION

A. Actual thickness: 3-5/8 inches.

B. Actual face size: 7-5/8 inches x 23-5/8".

C. Pattern and coursing: running bond.

D. Fabricate for 3/8 inch beds and joints.

E. Bed and Joint Surfaces:
   1. Cut or sawn full square for full thickness of unit.

F. Back: Sawn.

G. Fabricate stone per requirements, as shown on Drawings, and as follows:
   1. Granite Fabrication: Comply with NBGQA's "Specifications for Architectural Granite."
   2. Fabrication Tolerances: In accordance with NBGQA (SPEC).

H. Fabricate units for uniform coloration between adjacent units and over the full area of the installation.

I. Form stone corners to quirk mitered joint profile. Clean jagged corners from stone in preparation for setting.

J. Finish exposed faces and edges of stone, except sawed reveals, to comply with requirements indicated for finish and to match final samples and mockups.

K. Provide chases, reveals, reglets, openings, and similar features as required to accommodate adjacent work.

NOT FOR BIDDING

**PART 3 EXECUTION**

3.01 EXAMINATION

A. Verify that support work and site conditions are ready to receive work of this section.

B. Verify that items built-in under other sections are properly located and sized.

3.02 PREPARATION

A. Establish lines, levels, and coursing. Protect from disturbance.

B. Clean stone prior to erection. Do not use wire brushes or implements that mark or damage exposed surfaces.

3.03 INSTALLATION

A. Install flashings of longest practical length and seal watertight to back-up. Lap end joints minimum 6 inches and seal watertight.

B. Size stone units to fit opening dimensions and perimeter conditions.

C. Arrange stone pattern to provide color uniformity and minimize visual variations.

D. Provide setting and pointing mortar in accordance with section 04 2000.

E. Arrange stone coursing in running bond with consistent joint width.

F. Set stone in full mortar setting bed to fully support stone over bearing surface. Use setting buttons or shims to maintain correct joint width.

G. Install weep/cavity vents in vertical stone joints at 24 inches on center horizontally; immediately above horizontal flashings, above shelf angles and supports, and at top of each cavity space; do not permit mortar accumulation in cavity space.

3.04 JOINTS

A. Leave the following joints open for sealant:
   1. Joints in projecting units.
   2. Joints below ledge and relieving angles.
   3. Joints labeled "expansion joint".

B. Rake out mortar joints 5/8 to 3/4 inch and brush joints clean to accommodate pointing mortar. Fill joints with pointing mortar.

C. Pack mortar into joints and work into voids. Neatly tool surface to concave joint.

D. At joints to be sealed, clean mortar out of joint before it sets. Brush joints clean.

3.05 INSTALLATION - MASONRY FLASHINGS

A. Whether or not specifically indicated, install masonry flashing to divert water to exterior at all locations where downward flow of water will be interrupted.

3.06 CLEANING

A. Remove excess mortar as work progresses, and upon completion of work.

B. Clean soiled surfaces with cleaning solution.

C. Use non-metallic tools in cleaning operations.

3.07 PROTECTION

A. During temporary storage on site, at the end of working day, and during rainy weather, cover stone work exposed to weather with non-staining waterproof coverings, securely anchored.

**END OF SECTION**

NOT FOR BIDDING

NOT FOR BIDDING

# SECTION 047200
# CAST STONE MASONRY

## PART 1 GENERAL

1.01 SECTION INCLUDES

A. Architectural cast stone.

B. Units required are:
   1. Exterior wall units, including sills, water tables, and surrounds.
   2. Other items indicated on drawings.

C. NOTE: At the Contractor's option, items indicated as 'Calcium Silicate Stone Masonry' on the Drawings may be provided as Cast Stone Masonry as specified in this Section.

1.02 RELATED REQUIREMENTS

A. Section 042000 - Unit Masonry: Installation of cast stone in conjunction with masonry.

B. Section 047313 - Calcium Silicate Manufactured Stone Masonry

C. Section 079200 - Joint Sealants: Sealing joints indicated to be left open for sealant.

1.03 REFERENCE STANDARDS

A. ACI 318 - Building Code Requirements for Structural Concrete and Commentary; 2014 (Errata 2016).

B. ASTM A123/A123M - Standard Specification for Zinc (Hot-Dip Galvanized) Coatings on Iron and Steel Products; 2015.

C. ASTM A615/A615M - Standard Specification for Deformed and Plain Carbon Steel Bars for Concrete Reinforcement; 2015.

D. ASTM A767/A767M - Standard Specification for Zinc-Coated (Galvanized) Steel Bars for Concrete Reinforcement; 2009 (Reapproved 2015).

E. ASTM A884/A884M - Standard Specification for Epoxy-Coated Steel Wire and Welded Wire Reinforcement; 2014.

F. ASTM A1064/A1064M - Standard Specification for Carbon-Steel Wire and Welded Wire Reinforcement, Plain and Deformed, for Concrete; 2015.

G. ASTM C33/C33M - Standard Specification for Concrete Aggregates; 2013.

H. ASTM C150/C150M - Standard Specification for Portland Cement; 2015.

I. ASTM C270 - Standard Specification for Mortar for Unit Masonry; 2014a.

J. ASTM C494/C494M - Standard Specification for Chemical Admixtures for Concrete; 2013.

K. ASTM C1364 - Standard Specification for Architectural Cast Stone; 2016.

1.04 SUBMITTALS

A. See Section 013000 - Administrative Requirements, for submittal procedures.

B. Product Data: Test results of cast stone components made previously by the manufacturer.

C. Shop Drawings: Include elevations, dimensions, layouts, profiles, cross sections, reinforcement, exposed faces, arrangement of joints, anchoring methods, anchors, and piece numbers.

D. Mortar Color Selection Samples.

E. Verification Samples: Pieces of actual cast stone components not less than 6 inches square, illustrating range of color and texture to be anticipated in components furnished for the project.

NOT FOR BIDDING

F. Source Quality Control Test Reports.

G. Manufacturer's Qualification Data: Documentation showing compliance with specified requirements.

1.05 QUALITY ASSURANCE

A. Manufacturer Qualifications:
   1. A firm with a minimum of 5 years experience producing cast stone of types required for project.
   2. Current producer member of the Cast Stone Institute or the Architectural Precast Association.
   3. Adequate plant capacity to furnish quality, sizes, and quantity of cast stone required without delaying progress of the work.

1.06 MOCK-UP

A. Mock-Up: Provide full size cast stone components for installation in mock-up of exterior wall.

B. See Section 014000 - Quality Requirements for additional information.

C. See Section 042000 - Unit Masonry and Drawings for additional requirements.
   1. Approved mock-up will become standard for appearance and workmanship.
   2. Mock-up may not remain as part of the completed work.
   3. Remove mock-up not incorporated into the work and dispose of debris.

1.07 DELIVERY, STORAGE, AND HANDLING

A. Deliver cast stone components secured to shipping pallets and protected from damage and discoloration. Protect corners from damage.

B. Number each piece individually to match shop drawings and schedule.

C. Store cast stone components and installation materials in accordance with manufacturer's instructions.

D. Store cast stone components on pallets with nonstaining, waterproof covers. Ventilate under covers to prevent condensation. Prevent contact with dirt.

E. Protect cast stone components during handling and installation to prevent chipping, cracking, or other damage.

F. Store mortar materials where contamination can be avoided.

G. Schedule and coordinate production and delivery of cast stone components with unit masonry work to optimize on-site inventory and to avoid delaying the work.

**PART 2 PRODUCTS**

2.01 MANUFACTURERS

A. Architectural Cast Stone:
   1. Any current producer member of the Architectural Precast Association.
   2. Any current producer member of the Cast Stone Institute.

2.02 ARCHITECTURAL CAST STONE

A. Cast Stone: Architectural concrete product manufactured to simulate appearance of natural limestone, complying with ASTM C1364.
   1. Compressive Strength: As specified in ASTM C1364; calculate strength of pieces to be field cut at 80 percent of uncut piece.
   2. Freeze-Thaw Resistance: Demonstrated by field experience.

NOT FOR BIDDING

3. Surface Texture: Fine grained texture, with no bugholes, air voids, or other surface blemishes visible from distance of 20 feet.
4. Color: Custom color to match sample on file at Architect 's office.
5. Remove cement film from exposed surfaces before packaging for shipment.

B. Shapes: Provide shapes indicated on drawings.
1. Variation from Any Dimension, Including Bow, Camber, and Twist: Maximum of plus/minus 1/8 inch or length divided by 360, whichever is greater, but not more than 1/4 inch.
2. Unless otherwise indicated on drawings, provide:
a. Wash or slope of 1:12 on exterior horizontal surfaces.
b. Drips on projecting components, wherever possible.
c. Raised fillets at back of sills and at ends to be built in.

C. Reinforcement: Provide reinforcement as required to withstand handling and structural stresses; comply with ACI 318.

2.03 MATERIALS

A. Portland Cement: ASTM C150/C150M.
1. For Mortar: Type I or II, except Type III may be used in cold weather.

B. Coarse Aggregate: ASTM C33/C33M, except for gradation; granite, quartz, or limestone.

C. Fine Aggregate: ASTM C33/C33M, except for gradation; natural or manufactured sands.

D. Admixtures: ASTM C494/C494M.

E. Water: Potable.

F. Reinforcing Bars: ASTM A615/A615M deformed bars, galvanized.
1. Galvanized in accordance with ASTM A767/A767M, Class I.

G. Steel Welded Wire Reinforcement: ASTM A1064/A1064M, galvanized or ASTM A884/A884M, epoxy coated.

H. Embedded Anchors, Dowels, and Inserts: Type 304 stainless steel, of type and size as required for conditions.

I. Shelf Angles and Similar Structural Items: Hot-dip galvanized steel per ASTM A123/A123M, of shapes and sizes as required for conditions.

J. Mortar: Portland cement-lime, ASTM C270, Type N; do not use masonry cement.

K. Cleaner: General-purpose cleaner designed for removing mortar and grout stains, efflorescence, and other construction stains from new masonry surfaces without discoloring or damaging masonry surfaces; approved for intended use by cast stone manufacturer and by cleaner manufacturer for use on cast stone and adjacent masonry materials.

**PART 3 EXECUTION**

3.01 EXAMINATION

A. Examine construction to receive cast stone components. Notify Architect if construction is not acceptable.

B. Do not begin installation until unacceptable conditions have been corrected.

3.02 INSTALLATION

A. Install in accordance with manufacturer's instructions.

B. Install cast stone components in conjunction with masonry, complying with requirements of Section 042000.

NOT FOR BIDDING

C. Mechanically anchor cast stone units indicated; set remainder in mortar.

D. Setting:
   1. Drench cast stone components with clear, running water immediately before installation.
   2. Set units in a full bed of mortar unless otherwise indicated.
   3. Fill vertical joints with mortar.
   4. Fill dowel holes and anchor slots completely with mortar or non-shrink grout.

3.03 TOLERANCES

A. Joints: Make all joints 3/8 inch, except as otherwise detailed.
   1. Rake mortar joints 3/4 inch for pointing.
   2. Remove excess mortar from face of stone before pointing joints.
   3. Point joints with mortar in layers 3/8 inch thick and tool to a slight concave profile.
   4. Leave the following joints open for sealant:
      a. Head joints in top courses, including copings, parapets, cornices, sills, and steps.
      b. Joints in projecting units.
      c. Joints between rigidly anchored units, including soffit panels and column covers.
      d. Joints below lugged sills and stair treads.
      e. Joints below ledge and relieving angles.
      f. Joints labeled "expansion joint".

B. Installation Tolerances:
   1. Variation from Plumb: Not more than 1/8 inch in 10 feet or 1/4 inch in 20 feet or more.
   2. Variation from Level: Not more than 1/8 inch in 10 feet or 1/4 inch in 20 feet, or 3/8 inch maximum.
   3. Variation in Joint Width: Not more than 1/8 inch in 36 inches or 1/4 of nominal joint width, whichever is less.
   4. Variation in Plane Between Adjacent Surfaces (Lipping): Not more than 1/16 inch difference between planes of adjacent units or adjacent surfaces indicated to be flush with units.

3.04 REPAIR

A. Repairs: Repair chips and other surface damage noticeable when viewed in direct daylight at 20 feet.
   1. Repair with matching touchup material provided by the manufacturer and in accordance with manufacturer's instructions.
   2. Repair methods and results subject to Architect 's approval.

3.05 CLEANING

A. Clean completed exposed cast stone after mortar is thoroughly set and cured.
   1. Wet surfaces with water before applying cleaner.
   2. Apply cleaner to cast stone in accordance with manufacturer's instructions.
   3. Remove cleaner promptly by rinsing thoroughly with clear water.
   4. Do not use acidic cleaners.

3.06 PROTECTION

A. Protect completed work from damage.

B. Clean, repair, or restore damaged or mortar-splashed work to condition of new work.

**END OF SECTION**

NOT FOR BIDDING

# SECTION 047313
# CALCIUM SILICATE MANUFACTURED STONE MASONRY

## PART 1 - GENERAL

1.01 SECTION INCLUDES

A. Full bed calcium silicate masonry units.

B. Thin calcium silicate masonry units

C. Grid support system and accessories, where indicated.

D. NOTE: At the Contractor's option, items indicated as 'Calcium Silicate Stone Masonry' on the Drawings may be provided as Cast Stone Masonry as specified in this Section.

1.02 RELATED SECTIONS

A. Section 042000 - Masonry Anchorage, Accessories and Reinforcing.

B. Section 044313 - Stone Veneer at grade

C. Section 047200 - Cast Stone Masonry.

D. Section 055000 - Metal Fabrications: loose steel lintels.

E. Section 079200 - Joint Sealants.

1.03 REFERENCES

A. ACI 530/ASCE 5/TMS 402, Building Code Requirements for Masonry Structures.

B. ACI 530.1/ASCE 6/TMS 602, Specifications for Masonry Structures.

C. ASTM C73: Standard Specification for Calcium Silicate Face Brick.

D. ASTM C97: Standard Test Methods for Absorption and Bulk Specific Gravity of Dimension Stone.

E. ASTM C99, Standard Test Method for Modulus of Rupture of Dimension Stone.

F. ASTM C170, Standard Test Method for Compressive Strength of Dimension Stone.

1.04 SUBMITTALS

A. See Section 013000 - Administrative Requirements, for submittal procedures.

B. Product Data.

C. Shop Drawings: Include elevations, dimensions, layouts, profiles, cross sections, exposed faces, arrangement of joints, and anchoring methods.

1. Include details, dimensions and layout of grid support system.
2. Shop drawings for grid support system shall be signed and sealed by registered Professional Engineer in the State of Delaware

D. Mortar Color Selection Samples.

E. Samples: Two full size samples, illustrating color and texture.

F. Source Quality Control Test Reports.

G. Manufacturer's Qualification Data: Documentation showing compliance with specified requirements.

1.05 MOCK-UP

A. Mock-Up: Provide full size components for installation in mock-up of exterior wall.

B. See Section 014000 - Quality Requirements for additional requirements.

C. See Section 042000 - Unit Masonry and Drawings for requirements.

NOT FOR BIDDING

1. Approved mock-up will become standard for appearance and workmanship.
2. Mock-up may not remain as part of the completed work.
3. Remove mock-up not incorporated into the work and dispose of debris.

1.06 TEST REPORTS

A. Test Reports: test results prepared by an independent testing agency, indicating tested material characteristics as part of a source quality control program, current within the past five (5) years.

1.07 QUALITY ASSURANCE

A. Manufacturer Qualifications: manufacturer having sufficient plant facilities to produce the shapes, quantities and size of Products required in accordance with the project schedule.

B. Installer: Company or person specializing in commercial masonry work with 5 years documented experience.

C. Where shown, provide masonry anchor and support system compliance document signed and stamped by a registered Professional Engineer in the State of Delaware.
   1. Compliance document: include an evaluation of wind pressures, anchoring system dead load and fastener pull out analysis.

1.08 DELIVERY, STORAGE AND HANDLING

A. Deliver calcium silicate masonry units in protective film. Prevent damage to units.

B. Lift skids with proper and sufficiently long slings or forks with protection to prevent damage to units. Protect edges and corners.

C. Store units in a manner designed to prevent damage and staining of units.

D. Stack units on timbers or platforms at least 3 inches above grade.

E. Place polyethylene or other plastic film between wood and other finished surfaces of units when stored for extended periods of time.

F. Cover stored units with protective enclosure if exposed to weather.

G. Do not use salt or calcium-chloride to remove ice from masonry surfaces.

1.09 ENVIRONMENTAL REQUIREMENTS

A. Refer to Section 04 2000.
   1. Conform to requirements of ACI 530.1/ASCE 6/TMS 602, Specifications for Masonry Structures, PART 1.8.

**PART 2 PRODUCTS**

2.01 MANUFACTURERS

A. Manufacturers of calcium silicate masonry units having Products considered acceptable for use:
   1. Arriscraft International.
      a. Renaissance Masonry Units.
      b. Arris Clip Renaissance Masonry Units.
   2. Substitutions: See Section 016000.

B. Grid support system for thin units:
   1. Gridworx Mechanical Stone Hanging System, by Precision Wall Systems, Inc.
   2. Substitutions: See Section 016000.

NOT FOR BIDDING

2.02 MATERIALS

A. Calcium Silicate Masonry Units : to ASTM C73, Grade SW; solid units that have been pressure formed and autoclaved; bed depth as noted below; special shapes as indicated; and as follows:
   1. Sizes (refer to drawings for locations):
      a. Watertable modular stone:
         1) 11-5/8" high x 23-5/8" long x 3-5/8" deep.
         2) 7-5/8" high x 23-5/8" long x 3-5/8" deep.
      b. Bullnose: 3-5/8" high x 23-5/8" long x 7-5/8" deep, with drip cut.
      c. Sloped Sill: 3-5/8" high x 23-5/8" long x 5-5/8" deep.
      d. Stringcourse: Chamfered unit (two long edges), 7-5/8" high x 23-5/8" long x 4-5/8" deep.
      e. Entrance and window surrounds: standard modular units, 3-5/8" deep.
      f. Thin units, for use in grid support system, where indicated:
         1) 11-5/8" high x 23-5/8" long x 1-3/8" deep.
         2) 7-5/8" high x 23-5/8" long x 1-3/8" deep.
         3) Provide corner units with returns.
         4) Provide special chamfered string course as shown.
   2. Texture: smooth finish on exposed faces and ends.
   3. Color: Cafe;
   4. Compressive Strength: 6,815 psi, when tested to ASTM C170.
   5. Absorption: 10.3 percent, when tested to ASTM C97.
   6. Density: 120 lb/ft3, when tested to ASTM C97.
   7. Modulus of Rupture: 800 psi, when tested to ASTM C99.
   8. Mortar: 1:1:6 Portland cement, hydrated lime-sand mix.
   9. Wall Ties and Anchorages: as specified in Section 04 2000.
   10. Joint Sealants and Backer Rod: non-staining typeas specified in Section 079200.
   11. Flashing, Vents and Masonry Accessories: as specified in Section 04 2000.

B. Fabricate anchors for grid system from extruded aluminum alloy and temper as required to support loads imposed without exceeding allowable design stresses, but not less than strength and durability properties of Alloy 6005-T5.

2.03 FABRICATION TOLERANCES

A. Fabricate calcium silicate masonry units to the following tolerances:
   1. Unit Length: plus or minus 1/16".
   2. Unit Height: plus or minus 1/16".
   3. Deviation from Square: plus or minus 1/16", with measurement taken using the longest edge as the base.
   4. Bed Depth: plus or minus 1/8".
   5. Custom Unit Dimensions: plus or minus 1/8".

2.04 SOURCE QUALITY CONTROL

A. Test compressive strength and absorption from specimens selected at random from plant production.

2.05 GRID SUPPORT SYSTEM AND ACCESSORIES

A. Aluminum anchor and support system: Provide an aluminum anchor installation system complete with all anchors, sealants, and components as required for a complete installation.
   1. System: watertight, designed to withstand applicable building code wind loads.

NOT FOR BIDDING

B. Provide masonry anchor and support system compliance document signed and stamped by a registered Professional Engineer in the State of Delaware.
   1. Compliance document: include an evaluation of wind pressures, anchoring system dead load and fastener pull out analysis.

C. Aluminum alloy extrusions with a composition of 6005 alloy with a T5 temper.
   1. Channels provided in twelve foot (12') lengths.
   2. "L Brackets" are specified in length by the curtain wall engineer and set at 1/4 points of panel width.
   3. Aluminum components: anodized with a clear coat or with colored finishes of AA M12C22A21 meeting the standards of AAMA 611-98.

D. Fasteners:
   1. Steel Studs: Elco Drill-Flex or HILTI Kwik-Flex fasteners, #12 X 2" self drilling structural fasteners – SAE J 429 / Grade 5 with a Stalgard Coating.
   2. Installation to be on studs with a minimum of 18 gauge on 16" centers.
   3. Installation of fasteners for the "Intermediate T" to be on 16" centers with top and bottom screw to alternate so as to not have both invading the same cavity of the CMU block.
   4. "Top J" and "Starter J" to be installed on 16" centers.

E. Shims: Full bearing hi-impact resistant plastic of 3" vertical or greater.

F. Sealant: Refer to Section 079005 - Jont Sealers, Sealant Type 1 with 3/8" open cell backer rod.

G. Weep Vents: See Section 042000.

H. Flashing Tape: Self Adhesive backed butyl flashing tape for damp proofing upper anchor fasteners.
   1. Hohmann & Barnard, Inc. X Seal Tape Adhesive (or equal)
   2. Applied continuously behind anchor onto sheathing/waterproof membrane to create watertight seal around fasteners.

**PART 3 EXECUTION**

3.01 EXAMINATION

A. Verify site conditions are ready to receive work.

B. Inspect materials for fit and finish prior to installation. Do not set unacceptable units.

C. Beginning of installation means acceptance of existing conditions.

3.02 CUTTING MASONRY UNITS

A. Cut masonry units with wet-saw.

B. Pre-soak units using clean water prior to cutting.

C. Clean cut units using a stiff fiber brush and clean water. Allow units to surface dry prior to placement.

D. Finish cut edges to match face when exposed in wall.

E. Finish cut thin calcium silicate units accurately to shape and dimensions and full to the square, with jointing as shown on drawings

3.03 WETTING MASONRY UNITS

A. Where the ambient air temperature exceeds 100°F or exceeds 90°F with a wind velocity greater than 8 mph, pre-wet masonry units.

B. Lay wetted units when surface dry.

NOT FOR BIDDING

3.04 COURSING

A. Maintain calcium silicate masonry units 8 inches above grade, on stone masonry base course.

B. Maintain masonry courses to uniform width. Make vertical and horizontal joints equal and of uniform thickness.

C. Lay masonry units in runnning bond, as shown.

D. Flashing Tape: Apply continuously behind anchor onto sheathing/waterproof membrane to create watertight seal around fasteners.

E. Course one masonry unit and one mortar joint to equal 12 inches, or as shown.
   1. Maintain mortar joint thickness of 3/8 inch.
   2. Tool joints, when thumbprint hard, to a concave finish.

F. For thin calcium silicate units, maintain sealant joint thickness of 3/8 inch.

3.05 PLACING AND BONDING

A. Lay masonry in full bed of mortar, properly jointed with other work. Buttering corners of joints, deep or excessive furrowing of mortar joints is not permitted.

B. Fully bond intersections, and external corners.

C. Do not adjust masonry units after laying. Where resetting of masonry is required, remove, clean units and reset in new mortar.

D. Install loose steel lintels as scheduled.

E. Install wall ties and anchorages as specified in Section 04 2000.

F. Install flashings and masonry accessories as specified in Section 04 2000.
   1. Construct movement joints as specified in Section 04 2000.

3.06 SITE TOLERANCES

A. Erect masonry within the tolerances described in ACI 530.1/ASCE 6/TMS 602, Specifications for Masonry Structures, PART 3.30.

B. Variation in Alignment from Unit to Adjacent Unit: 1/16" maximum.

C. Variation of Sealant Joint Thickness: 1/8" every 36".

3.07 FIELD QUALITY CONTROL

A. Architect Inspection: Architect will inspect installed masonry and reject masonry that is chipped, cracked, or blemished (streaked, stained or otherwise damaged), as described below.
   1. Masonry will be inspected to be free of cracks or other blemishes on the finished face or front edges of the masonry units exceeding 3/8 inch or that can be seen from a distance of 10 feet.
   2. Units shall exhibit a texture approximately equal to the approved sample when viewed under diffused daylight illumination at a 20 foot distance.
   3. Correct rejected masonry as directed by Architect.

3.08 ADJUSTING AND CLEANING

A. Repair chips on smooth finished units with patch kits furnished by manufacturer.
   1. Clean masonry units as specified in Section 04 2000.
   2. Clean a 100 square foot area of wall designated by Architect as directed below and leave for one week. If no harmful effects appear, all objectionable stains have been removed and after mortar has set and cured, clean masonry as follows:
      a. Protect windows, sills, doors, trim and other work from damage.

NOT FOR BIDDING

b. Remove large particles with stiff fiber brushes without damaging surface.
c. Saturate masonry with clean water and flush off loose mortar and dirt.
d. Dilute cleaning agent with clean water in controlled proportions.
e. Apply solution to pre-soaked wall surface using soft-bristled brush.
f. Thoroughly rinse cleaning solution and residue from wall surface.

3. Use alternative cleaning solutions and methods for difficult to clean masonry only after consultation with masonry unit manufacturer.

3.09 PROTECTION

A. Protect units from damage resulting from subsequent construction operations.
1. Use protection materials and methods which will not stain or damage units.
2. Remove protection materials upon Substantial Completion, or when risk of damage is no longer present.

**END OF SECTION**

NOT FOR BIDDING

# SECTION 051200
# STRUCTURAL STEEL

## PART 1 - GENERAL

### 1.1 RELATED DOCUMENTS

A. Drawings and general provisions of the Contract, including General and Supplementary Conditions and Division 1 Specification Sections, apply to this Section.

### 1.2 SUMMARY

A. This Section includes the following:

1. Structural steel.
2. Grout.

B. Related Sections include the following:

1. Division 1 Section "Quality Requirements" for independent testing agency procedures and administrative requirements.
2. Division 5 Section "Steel Deck" for field installation of shear connectors.
3. Division 5 Section "Metal Fabrications" for steel lintels or shelf angles not attached to structural-steel frame miscellaneous steel fabrications and other metal items not defined as structural steel.
4. Division 9 painting Sections for surface preparation and priming requirements.

### 1.3 DEFINITIONS

A. Structural Steel: Elements of structural-steel frame, as classified by AISC's "Code of Standard Practice for Steel Buildings and Bridges," that support design loads.

### 1.4 PERFORMANCE REQUIREMENTS

A. Connections: Provide details of simple shear connections required by the Contract Documents to be selected or completed by structural-steel fabricator to withstand ASD-service loads indicated and comply with other information and restrictions indicated.

1. Select and complete connections using schematic details indicated and AISC's "Manual of Steel Construction, Allowable Stress Design," Part 4

B. Construction: Type 2, simple framing.

NOT FOR BIDDING

## 1.5 SUBMITTALS

A. Product Data: For each type of product indicated.

B. Shop Drawings: Show fabrication of structural-steel components.

1. Include details of cuts, connections, splices, camber, holes, and other pertinent data.
2. Include embedment drawings.
3. Indicate welds by standard AWS symbols, distinguishing between shop and field welds, and show size, length, and type of each weld.
4. Indicate type, size, and length of bolts, distinguishing between shop and field bolts. Identify pretensioned and slip-critical high-strength bolted connections.

C. Welding certificates.

D. Qualification Data: For Installer, fabricator, professional engineer, testing agency.

E. Mill Test Reports: Signed by manufacturers certifying that the following products comply with requirements:

1. Structural steel including chemical and physical properties.
2. Bolts, nuts, and washers including mechanical properties and chemical analysis.
3. Direct-tension indicators.
4. Tension-control, high-strength bolt-nut-washer assemblies.
5. Shear stud connectors.
6. Shop primers.
7. Nonshrink grout.

F. Source quality-control test reports.

## 1.6 QUALITY ASSURANCE

A. Fabrication Qualifications: A qualified fabricator that participates in the AISC Quality Certification Program and is designated an AISC-Certified Plant, Category STD. If the fabricator does not have the AISC certification they can still bid the project but they are responsible to have a third party inspector inspect the fabrication process to ensure they are meeting AISC guidelines.

B. Installer Qualifications: A qualified installer who participates in the AISC Quality Certification Program and is designated an AISC-Certified Erector, Category CSE.

C. Shop-Painting Applicators: Qualified according to AISC's Sophisticated Paint Endorsement P1 or SSPC-QP 3, "Standard Procedure for Evaluating Qualifications of Shop Painting Applicators."

D. Welding: Qualify procedures and personnel according to AWS D1.1, "Structural Welding Code--Steel."

E. Comply with applicable provisions of the following specifications and documents:

NOT FOR BIDDING

1. AISC's "Code of Standard Practice for Steel Buildings and Bridges."
2. AISC's "Seismic Provisions for Structural Steel Buildings" and "Supplement No. 2."
3. AISC's "Specification for Structural Steel Buildings--Allowable Stress Design and Plastic Design."
4. AISC's "Specification for the Design of Steel Hollow Structural Sections."
5. AISC's "Specification for Allowable Stress Design of Single-Angle Members"
6. RCSC's "Specification for Structural Joints Using ASTM A 325 or A 490 Bolts."

F. Mockups: Build mockups of architecturally exposed structural steel to set quality standards for fabrication and installation.

1. Coordinate finish painting requirements with Division 9 painting Sections.
2. Approved mockups may become part of the completed Work if undisturbed at time of Substantial Completion.

G. Preinstallation Conference: Conduct conference at Project site to comply with requirements in Division 1 Section "Project Management and Coordination."

## 1.7 DELIVERY, STORAGE, AND HANDLING

A. Store materials to permit easy access for inspection and identification. Keep steel members off ground and spaced by using pallets, dunnage, or other supports and spacers. Protect steel members and packaged materials from erosion and deterioration.

1. Store fasteners in a protected place. Clean and relubricate bolts and nuts that become dry or rusty before use.
2. Do not store materials on structure in a manner that might cause distortion, damage, or overload to members or supporting structures. Repair or replace damaged materials or structures as directed.

## 1.8 COORDINATION

A. Furnish anchorage items to be embedded in or attached to other construction without delaying the work. Provide setting diagrams, sheet metal templates, instructions, and directions for installation.

# PART 2 - PRODUCTS

## 2.1 STRUCTURAL-STEEL MATERIALS

A. W-Shapes: ASTM A 992/A 992M.

B. Channels, Angles, M, S-Shapes: ASTM A 36/A 36M.

C. Plate and Bar: ASTM A 36/A 36M.

NOT FOR BIDDING

D. Corrosion-Resisting Structural Steel: ASTM A 588/A 588M, Grade 50 (345).

E. Cold-Formed Hollow Structural Sections: ASTM A 500, Grade B, structural tubing.

F. Corrosion-Resisting Cold-Formed Hollow Structural Sections: ASTM A 847, structural tubing.

G. Steel Pipe: ASTM A 53/A 53M, Type E or S, Grade B.

1. Weight Class: Standard, Extra strong, or Double-extra strong, as indicated.
2. Finish: Black, except where indicated to be galvanized.

H. Medium-Strength Steel Castings: ASTM A 27/A 27M, Grade 65-35 (Grade 450-240), carbon steel.

I. High-Strength Steel Castings: ASTM A 148/A 148M,Grade 80-50 (Grade 550-345), carbon or alloy steel.

J. Welding Electrodes: Comply with AWS requirements.

2.2 BOLTS, CONNECTORS, AND ANCHORS

A. High-Strength Bolts, Nuts, and Washers: ASTM A 325 (ASTM A 325M), Type 1, heavy hex steel structural bolts; ASTM A 563 (ASTM A 563M) heavy hex carbon-steel nuts; and ASTM F 436 (ASTM F 436M) hardened carbon-steel washers.

1. Finish: Plain.
2. Direct-Tension Indicators: ASTM F 959, Type 325 (ASTM F 959M, Type 8.8,) compressible-washer type.

a. Finish: Plain

B. Shear Connectors: ASTM A 108, Grades 1015 through 1020, headed-stud type, cold-finished carbon steel; AWS D1.1, Type B.

C. Unheaded Anchor Rods: ASTM F 1554, Grade 36

1. Configuration: Straight or Hooked, as indicated.
2. Nuts: ASTM A 563 (ASTM A 563M) heavy hex carbon steel.
3. Plate Washers: ASTM A 36/A 36M carbon steel.
4. Washers: ASTM F 436 (ASTM F 436M) hardened carbon steel.
5. Finish: Plain

D. Headed Anchor Rods: ASTM F 1554, Grade 36 straight.

1. Nuts: ASTM A 563 (ASTM A 563M) heavy hex carbon steel.
2. Plate Washers: ASTM A 36/A 36M carbon steel.
3. Washers: ASTM F 436 (ASTM F 436M) hardened carbon steel.
4. Finish: Plain

NOT FOR BIDDING

E. Threaded Rods: ASTM A 36/A 36M

1. Nuts: ASTM A 563 (ASTM A 563M) heavy hex carbon steel.
2. Washers: ASTM F 436 (ASTM F 436M) hardened carbon steel.
3. Finish: Plain

F. Eye Bolts and Nuts: ASTM A 108, Grade 1030, cold-finished carbon steel.

G. Sleeve Nuts: ASTM A 108, Grade 1018, cold-finished carbon steel.

## 2.3 PRIMER

A. Primer: SSPC-Paint 25, Type I, iron oxide, zinc oxide, raw linseed oil, and alkyd.

B. Primer: Fabricator's standard lead- and chromate-free, nonasphaltic, rust-inhibiting primer.

C. Galvanizing Repair Paint: ASTM A 780.

## 2.4 GROUT

A. Cement Grout: Portland cement, ASTM C 150, Type I; and clean, natural sand, ASTM C 404, Size No. 2. Mix at ratio of 1 part cement to 2-1/2 parts sand, by volume, with minimum water required for placement and hydration.

B. Metallic, Shrinkage-Resistant Grout: ASTM C 1107, factory-packaged, metallic aggregate grout, mixed with water to consistency suitable for application and a 30-minute working time.

## 2.5 FABRICATION

A. Structural Steel: Fabricate and assemble in shop to greatest extent possible. Fabricate according to AISC's "Code of Standard Practice for Steel Buildings and Bridges" and AISC's "Specification for Structural Steel Buildings--Allowable Stress Design and Plastic Design

1. Camber structural-steel members where indicated.
2. Identify high-strength structural steel according to ASTM A 6/ A 6M and maintain markings until structural steel has been erected.
3. Mark and match-mark materials for field assembly.
4. Complete structural-steel assemblies, including welding of units, before starting shop-priming operations.

B. Thermal Cutting: Perform thermal cutting by machine to greatest extent possible.

1. Plane thermally cut edges to be welded to comply with requirements in AWS D1.1.

C. Bolt Holes: Cut, drill, mechanically thermal cut, or punch standard bolt holes perpendicular to metal surfaces.

NOT FOR BIDDING

D. Finishing: Accurately finish ends of columns and other members transmitting bearing loads.

E. Cleaning: Clean and prepare steel surfaces that are to remain unpainted according to SSPC-SP 3, "Power Tool Cleaning."

F. Shear Connectors: Prepare steel surfaces as recommended by manufacturer of shear connectors. Use automatic end welding of headed-stud shear connectors according to AWS D1.1 and manufacturer's written instructions.

G. Welded Door Frames: Build up welded door frames attached to structural steel. Weld exposed joints continuously and grind smooth. Plug-weld fixed steel bar stops to frames. Secure removable stops to frames with countersunk, cross-recessed head machine screws, uniformly spaced not more than 10 inches (250 mm) o.c., unless otherwise indicated.

H. Holes: Provide holes required for securing other work to structural steel and for passage of other work through steel framing members.

1. Cut, drill, or punch holes perpendicular to steel surfaces. Do not thermally cut bolt holes or enlarge holes by burning.
2. Base-Plate Holes: Cut, drill, mechanically thermal cut, or punch holes perpendicular to steel surfaces.
3. Weld threaded nuts to framing and other specialty items indicated to receive other work.

## 2.6 SHOP CONNECTIONS

A. High-Strength Bolts: Shop install high-strength bolts according to RCSC's "Specification for Structural Joints Using ASTM A 325 or A 490 Bolts" for type of bolt and type of joint specified.

1. Joint Type: Snug tightened.

B. Weld Connections: Comply with AWS D1.1 for welding procedure specifications, tolerances, appearance, and quality of welds and for methods used in correcting welding work.

1. Remove backing bars or runoff tabs, back gouge, and grind steel smooth.
2. Assemble and weld built-up sections by methods that will maintain true alignment of axes without exceeding tolerances of AISC's "Code of Standard Practice for Steel Buildings and Bridges" for mill material.
3. Verify that weld sizes, fabrication sequence, and equipment used for architecturally exposed structural steel will limit distortions to allowable tolerances. Prevent weld show-through on exposed steel surfaces.

a. Grind butt welds flush.
b. Grind or fill exposed fillet welds to smooth profile. Dress exposed welds.

## 2.7 SHOP PRIMING

A. Shop prime steel surfaces except the following:

NOT FOR BIDDING

1. Surfaces embedded in concrete or mortar. Extend priming of partially embedded members to a depth of 2 inches (50 mm).
2. Surfaces to be field welded.
3. Surfaces to be high-strength bolted with slip-critical connections.
4. Surfaces to receive sprayed fire-resistive materials.
5. Galvanized surfaces.

B. Surface Preparation: Clean surfaces to be painted. Remove loose rust and mill scale and spatter, slag, or flux deposits. Prepare surfaces according to the following specifications and standards:
   1. SSPC-SP 3, "Power Tool Cleaning."

C. Priming: Immediately after surface preparation, apply primer according to manufacturer's written instructions and at rate recommended by SSPC to provide a dry film thickness of not less than 1.5 mils (0.038 mm). Use priming methods that result in full coverage of joints, corners, edges, and exposed surfaces.

   1. Stripe paint corners, crevices, bolts, welds, and sharp edges.
   2. Apply two coats of shop paint to inaccessible surfaces after assembly or erection. Change color of second coat to distinguish it from first.

D. Painting: Apply a 1-coat, nonasphaltic primer complying with SSPC-PS Guide 7.00, "Painting System Guide 7.00: Guide for Selecting One-Coat Shop Painting Systems," to provide a dry film thickness of not less than 1.5 mils (0.038 mm).

## 2.8 GALVANIZING

A. Hot-Dip Galvanized Finish: Apply zinc coating by the hot-dip process to structural steel according to ASTM A 123/ A 123M.

   1. Fill vent holes and grind smooth after galvanizing.
   2. Galvanize lintels and shelf angles attached to structural-steel frame and located in exterior walls.

## 2.9 SOURCE QUALITY CONTROL

A. Owner will engage an independent testing and inspecting agency to perform shop tests and inspections and prepare test reports.

   1. Provide testing agency with access to places where structural-steel work is being fabricated or produced to perform tests and inspections.

B. Correct deficiencies in Work that test reports and inspections indicate does not comply with the Contract Documents.

C. Bolted Connections: Shop-bolted connections will be tested and inspected according to RCSC's "Specification for Structural Joints Using ASTM A 325 or A 490 Bolts."

NOT FOR BIDDING

D. Welded Connections: In addition to visual inspection, shop-welded connections will be tested and inspected according to AWS D1.1 and the following inspection procedures, at testing agency's option:

1. Liquid Penetrant Inspection: ASTM E 165.
2. Magnetic Particle Inspection: ASTM E 709; performed on root pass and on finished weld. Cracks or zones of incomplete fusion or penetration will not be accepted.
3. Ultrasonic Inspection: ASTM E 164.
4. Radiographic Inspection: ASTM E 94.

E. In addition to visual inspection, shop-welded shear connectors will be tested and inspected according to requirements in AWS D1.1 for stud welding and as follows:

1. Bend tests will be performed if visual inspections reveal either a less-than- continuous 360-degree flash or welding repairs to any shear connector.
2. Tests will be conducted on additional shear connectors if weld fracture occurs on shear connectors already tested, according to requirements in AWS D1.1.

PART 3 - EXECUTION

3.1 EXAMINATION

A. Verify elevations of concrete- and masonry-bearing surfaces and locations of anchor rods, bearing plates, and other embedments, with steel erector present, for compliance with requirements.

B. Proceed with installation only after unsatisfactory conditions have been corrected.

3.2 PREPARATION

A. Provide temporary shores, guys, braces, and other supports during erection to keep structural steel secure, plumb, and in alignment against temporary construction loads and loads equal in intensity to design loads. Remove temporary supports when permanent structural steel, connections, and bracing are in place, unless otherwise indicated.

3.3 ERECTION

A. Set structural steel accurately in locations and to elevations indicated and according to AISC's "Code of Standard Practice for Steel Buildings and Bridges" and "Specification for Structural Steel Buildings--Allowable Stress Design and Plastic Design."

B. Base and Bearing Plates: Clean concrete- and masonry-bearing surfaces of bond-reducing materials, and roughen surfaces prior to setting base and bearing plates. Clean bottom surface of base and bearing plates.

NOT FOR BIDDING

1. Set base and bearing plates for structural members on wedges, shims, or setting nuts as required.
2. Weld plate washers to top of base plate.
3. Snug-tighten anchor rods after supported members have been positioned and plumbed. Do not remove wedges or shims but, if protruding, cut off flush with edge of base or bearing plate before packing with grout.
4. Promptly pack grout solidly between bearing surfaces and base or bearing plates so no voids remain. Neatly finish exposed surfaces; protect grout and allow to cure. Comply with manufacturer's written installation instructions for shrinkage-resistant grouts.

C. Maintain erection tolerances of structural steel and architecturally exposed structural steel within AISC's "Code of Standard Practice for Steel Buildings and Bridges.

D. Align and adjust various members forming part of complete frame or structure before permanently fastening. Before assembly, clean bearing surfaces and other surfaces that will be in permanent contact with members. Perform necessary adjustments to compensate for discrepancies in elevations and alignment.

1. Level and plumb individual members of structure.
2. Make allowances for difference between temperature at time of erection and mean temperature when structure is completed and in service.

E. Splice members only where indicated.

F. Remove erection bolts on welded architecturally exposed structural steel; fill holes with plug welds; and grind smooth at exposed surfaces.

G. Do not use thermal cutting during erection unless approved by Architect. Finish thermally cut sections within smoothness limits in [AWS D1.1].

H. Do not enlarge unfair holes in members by burning or using drift pins. Ream holes that must be enlarged to admit bolts.

I. Shear Connectors: Prepare steel surfaces as recommended by manufacturer of shear connectors. Use automatic end welding of headed-stud shear connectors according to AWS D1.1 and manufacturer's written instructions.

## 3.4 FIELD CONNECTIONS

A. High-Strength Bolts: Install high-strength bolts according to RCSC's "Specification for Structural Joints Using ASTM A 325 or A 490 Bolts" for type of bolt and type of joint specified.

1. Joint Type: Snug tightened.

B. Weld Connections: Comply with AWS D1.1 for welding procedure specifications, tolerances, appearance, and quality of welds and for methods used in correcting welding work.

NOT FOR BIDDING

1. Comply with AISC's "Code of Standard Practice for Steel Buildings and Bridges" and "Specification for Structural Steel Buildings--Allowable Stress Design and Plastic Design for bearing, adequacy of temporary connections, alignment, and removal of paint on surfaces adjacent to field welds.
2. Remove backing bars or runoff tabs, back gouge, and grind steel smooth.
3. Assemble and weld built-up sections by methods that will maintain true alignment of axes without exceeding tolerances of AISC's "Code of Standard Practice for Steel Buildings and Bridges" for mill material.
4. Verify that weld sizes, fabrication sequence, and equipment used for architecturally exposed structural steel will limit distortions to allowable tolerances. Prevent weld show-through on exposed steel surfaces.

    a. Grind butt welds flush.
    b. Grind or fill exposed fillet welds to smooth profile. Dress exposed welds.

3.5 FIELD QUALITY CONTROL

A. Testing Agency: Owner will engage a qualified independent testing and inspecting agency to inspect field welds and high-strength bolted connections.

B. Bolted Connections: Shop-bolted connections will be tested and inspected according to RCSC's "Specification for Structural Joints Using ASTM A 325 or A 490 Bolts."

C. Welded Connections: Field welds will be visually inspected according to AWS D1.1.

1. In addition to visual inspection, field welds will be tested according to AWS D1.1 and the following inspection procedures, at testing agency's option:

    a. Liquid Penetrant Inspection: ASTM E 165.
    b. Magnetic Particle Inspection: ASTM E 709; performed on root pass and on finished weld. Cracks or zones of incomplete fusion or penetration will not be accepted.
    c. Ultrasonic Inspection: ASTM E 164.
    d. Radiographic Inspection: ASTM E 94.

D. In addition to visual inspection, test and inspect field-welded shear connectors according to requirements in AWS D1.1 for stud welding and as follows:

1. Perform bend tests if visual inspections reveal either a less-than- continuous 360-degree flash or welding repairs to any shear connector.
2. Conduct tests on additional shear connectors if weld fracture occurs on shear connectors already tested, according to requirements in AWS D1.1.

E. Correct deficiencies in Work that test reports and inspections indicate does not comply with the Contract Documents.

NOT FOR BIDDING

## 3.6 REPAIRS AND PROTECTION

A. Repair damaged galvanized coatings on galvanized items with galvanized repair paint according to ASTM A 780 and manufacturer's written instructions.

B. Touchup Painting: After installation, promptly clean, prepare, and prime or repprime field connections, rust spots, and abraded surfaces of prime-painted joists and accessories, bearing plates, and abutting structural steel.

1. Clean and prepare surfaces by SSPC-SP 2 hand-tool cleaning or SSPC-SP 3 power-tool cleaning.
2. Apply a compatible primer of same type as shop primer used on adjacent surfaces.

C. Touchup Painting: Cleaning and touchup painting are specified in Division 9 painting Sections.

END OF SECTION 051200

NOT FOR BIDDING

# SECTION 052100

# STEEL JOIST FRAMING

## PART 1 - GENERAL

### 1.1 RELATED DOCUMENTS

A. Drawings and general provisions of the Contract, including General and Supplementary Conditions and Division 01 Specification Sections, apply to this Section.

### 1.2 SUMMARY

A. This Section includes the following:

1. K-series steel joists.
2. KCS-type K-series steel joists.
3. Long-span steel joists.
4. Joist accessories.

B. Related Sections include the following:

1. Division 03 Section "Cast-in-Place Concrete" for installing bearing plates in concrete.
2. Division 04 Section "Unit Masonry" for installing bearing plates in unit masonry.

### 1.3 DEFINITIONS

A. SJI "Specifications": Steel Joist Institute's "Standard Specifications, Load Tables and Weight Tables for Steel Joists and Joist Girders."

B. Special Joists: Steel joists or joist girders requiring modification by manufacturer to support nonuniform, unequal, or special loading conditions that invalidate load tables in SJI's "Specifications."

### 1.4 PERFORMANCE REQUIREMENTS

A. Structural Performance: Provide special joists and connections capable of withstanding design loads indicated.

B. Design special joists to withstand design loads with live load deflections no greater than the following:
1. Roof Joists: Vertical deflection of 1/240 of the span.

### 1.5 SUBMITTALS

A. Product Data: For each type of joist, accessory, and product indicated.

NOT FOR BIDDING

B. Shop Drawings: Show layout, designation, number, type, location, and spacings of joists. Include joining and anchorage details, bracing, bridging, joist accessories; splice and connection locations and details; and attachments to other construction.

1. Indicate locations and details of bearing plates to be embedded in other construction.
2. Comprehensive engineering analysis of special joists signed and sealed by the qualified professional engineer responsible for its preparation.

C. Welding certificates.

D. Manufacturer Certificates: Signed by manufacturers certifying that joists comply with requirements.

E. Mill Certificates: Signed by bolt manufacturers certifying that bolts comply with requirements.

F. Qualification Data: For manufacturer.

G. Field quality-control test and inspection reports.

H. Research/Evaluation Reports: For joists.

## 1.6 QUALITY ASSURANCE

A. Manufacturer Qualifications: A manufacturer certified by SJI to manufacture joists complying with applicable standard specifications and load tables of SJI "Specifications."

1. Manufacturer's responsibilities include providing professional engineering services for designing special joists to comply with performance requirements.

B. SJI Specifications: Comply with standard specifications in SJI's "Specifications" that are applicable to types of joists indicated.

C. Welding: Qualify procedures and personnel according to AWS D1.1/D1.1M, "Structural Welding Code - Steel."

## 1.7 DELIVERY, STORAGE, AND HANDLING

A. Deliver, store, and handle joists as recommended in SJI's "Specifications."

B. Protect joists from corrosion, deformation, and other damage during delivery, storage, and handling.

## 1.8 SEQUENCING

A. Deliver steel bearing plates to be built into masonry construction.

NOT FOR BIDDING

PART 2 - PRODUCTS

2.1 MATERIALS

A. Steel: Comply with SJI's "Specifications" for web and steel-angle chord members.

B. Steel Bearing Plates: ASTM A 36/A 36M.

C. Carbon-Steel Bolts and Threaded Fasteners: ASTM A 307, Grade A (ASTM F 568M, Property Class 4.6), carbon-steel, hex-head bolts and threaded fasteners; carbon-steel nuts; and flat, unhardened steel washers.

1. Finish: Plain, uncoated.

D. High-Strength Bolts, Nuts, and Washers: ASTM A 325 (ASTM A 325M), Type 1, heavy hex steel structural bolts; ASTM A 563 (ASTM A 563M) heavy hex carbon-steel nuts; and ASTM F 436 (ASTM F 436M) hardened carbon-steel washers.

1. Finish: Plain.

E. Welding Electrodes: Comply with AWS standards.

F. Galvanizing Repair Paint: MPI#18, MPI#19, or SSPC-Paint 20, ASTM A 780.

2.2 PRIMERS

A. Primer: SSPC-Paint 15, or manufacturer's standard shop primer complying with performance requirements in SSPC-Paint 15.

2.3 K-SERIES STEEL JOISTS

A. Manufacture steel joists of type indicated according to "Standard Specifications for Open Web Steel Joists, K-Series" in SJI's "Specifications," with steel-angle top- and bottom-chord members, underslung ends, and parallel top chord.

1. Joist Type: K-series steel joists and KCS-type K-series steel joists.

B. Steel Joist Substitutes: Manufacture according to "Standard Specifications for Open Web Steel Joists, K-Series" in SJI's "Specifications," with steel-angle or -channel members.

C. Comply with AWS requirements and procedures for shop welding, appearance, quality of welds, and methods used in correcting welding work.

D. Provide holes in chord members for connecting and securing other construction to joists.

E. Top-Chord Extensions: Extend top chords of joists a maximum of 1’-6” with SJI's Type S top-chord extensions where indicated, complying with SJI's "Specifications" and meeting Total Allowable Load of 550 lb/ft and Allowable Live Load of 450 lb/ft.

NOT FOR BIDDING

F. Extended Ends: Extend bearing ends of joists with SJI's Type R extended ends where indicated, complying with SJI's "Specifications" and meeting Total Allowable Load of 550 lb/ft and Allowable Live Load of 450 lb/ft.

G. Camber joists according to SJI's "Specifications." or as indicated.

H. Equip bearing ends of joists with manufacturer's standard beveled ends or sloped shoes if joist slope exceeds 1/4 inch per 12 inches (1:48).

## 2.4 LONG-SPAN STEEL JOISTS

A. Manufacture steel joists according to "Standard Specifications for Longspan Steel Joists, LH-Series and Deep Longspan Steel Joists, DLH-Series" in SJI's "Specifications," with steel-angle top- and bottom-chord members; of joist type and end and top-chord arrangements as follows or as indicated:

1. Joist Type: LH-series steel joists and DLH-series steel joists.
2. End Arrangement: Underslung.
3. Top-Chord Arrangement: Parallel or pitched if indicated.

B. Comply with AWS requirements and procedures for shop welding, appearance, quality of welds, and methods used in correcting welding work.

C. Provide holes in chord members for connecting and securing other construction to joists.

D. Camber long-span steel joists according to SJI's "Specifications."

E. Equip bearing ends of joists with manufacturer's standard beveled ends or sloped shoes if joist slope exceeds 1/4 inch per 12 inches (1:48).

## 2.5 JOIST ACCESSORIES

A. Bridging: Provide bridging anchors and number of rows of horizontal or diagonal bridging of material, size, and type required by SJI's "Specifications" for type of joist, chord size, spacing, and span. Furnish additional erection bridging if required for stability. Provide additional bridging as indicated on structural drawings.

B. Fabricate steel bearing plates with integral anchorages of sizes and thicknesses indicated. Shop prime paint.

C. Supply ceiling extensions, either extended bottom-chord elements or a separate extension unit of enough strength to support ceiling construction. Extend ends to within 1/2 inch (13 mm) of finished wall surface, unless otherwise indicated.

D. Supply miscellaneous accessories, including splice plates and bolts required by joist manufacturer to complete joist installation.

NOT FOR BIDDING

## 2.6 CLEANING AND SHOP PAINTING

A. Clean and remove loose scale, heavy rust, and other foreign materials from fabricated joists and accessories by hand-tool cleaning, SSPC-SP 2 or power-tool cleaning, SSPC-SP 3.

B. Do not prime paint joists and accessories to receive sprayed fire-resistive materials.

C. Apply 1 coat of shop primer to joists and joist accessories to be primed to provide a continuous dry paint film not less than 1 mil (0.025 mm) thick.

D. Shop priming of joists and joist accessories is specified in Division 09 painting Sections.

# PART 3 - EXECUTION

## 3.1 EXAMINATION

A. Examine supporting substrates, embedded bearing plates, and abutting structural framing for compliance with requirements for installation tolerances and other conditions affecting performance.

1. Proceed with installation only after unsatisfactory conditions have been corrected.

## 3.2 INSTALLATION

A. Do not install joists until supporting construction is in place and secured.

B. Install joists and accessories plumb, square, and true to line; securely fasten to supporting construction according to SJI's "Specifications," joist manufacturer's written recommendations, and requirements in this Section.

1. Before installation, splice joists delivered to Project site in more than one piece.
2. Space, adjust, and align joists accurately in location before permanently fastening.
3. Install temporary bracing and erection bridging, connections, and anchors to ensure that joists are stabilized during construction.
4. Delay rigidly connecting bottom-chord extensions to columns or supports until dead loads have been applied.

C. Field weld joists to supporting steel bearing plates and framework. Coordinate welding sequence and procedure with placement of joists. Comply with AWS requirements and procedures for welding, appearance and quality of welds, and methods used in correcting welding work.

D. Bolt joists to supporting steel framework using carbon-steel bolts.

E. Bolt joists to supporting steel framework using high-strength structural bolts. Comply with RCSC's "Specification for Structural Joints Using ASTM A 325 or ASTM A 490 Bolts" for high-strength structural bolt installation and tightening requirements.

NOT FOR BIDDING

F. Install and connect bridging concurrently with joist erection, before construction loads are applied. Anchor ends of bridging lines at top and bottom chords if terminating at walls or beams.

## 3.3 FIELD QUALITY CONTROL

A. Testing Agency: Owner will engage a qualified independent testing and inspecting agency to inspect field welds and bolted connections and to perform field tests and inspections and prepare test and inspection reports.

B. Field welds will be visually inspected according to AWS D1.1/D1.1M.

C. In addition to visual inspection, field welds will be tested according to AWS D1.1/D1.1M and the following procedures, as applicable:

1. Radiographic Testing: ASTM E 94.
2. Magnetic Particle Inspection: ASTM E 709.
3. Ultrasonic Testing: ASTM E 164.
4. Liquid Penetrant Inspection: ASTM E 165.

D. Bolted connections will be visually inspected.

E. High-strength, field-bolted connections will be tested and verified according to procedures in RCSC's "Specification for Structural Joints Using ASTM A 325 or ASTM A 490 Bolts."

F. Correct deficiencies in Work that test and inspection reports have indicated are not in compliance with specified requirements.

G. Additional testing will be performed to determine compliance of corrected Work with specified requirements.

## 3.4 REPAIRS AND PROTECTION

A. Repair damaged galvanized coatings on galvanized items with galvanized repair paint according to ASTM A 780 and manufacturer's written instructions.

B. Touchup Painting: After installation, promptly clean, prepare, and prime or reprime field connections, rust spots, and abraded surfaces of prime-painted joists, bearing plates, abutting structural steel, and accessories.

1. Clean and prepare surfaces by hand-tool cleaning, SSPC-SP 2, or power-tool cleaning, SSPC-SP 3.
2. Apply a compatible primer of same type as shop primer used on adjacent surfaces.

C. Touchup Painting: Cleaning and touchup painting are specified in Division 09 painting Sections.

NOT FOR BIDDING

D. Provide final protection and maintain conditions, in a manner acceptable to manufacturer and Installer, that ensure that joists and accessories are without damage or deterioration at time of Substantial Completion.

END OF SECTION 052100

NOT FOR BIDDING

# SECTION 053100

# STEEL DECK

## PART 1 - GENERAL

### 1.1 RELATED DOCUMENTS

A. Drawings and general provisions of the Contract, including General and Supplementary Conditions and Division 01 Specification Sections, apply to this Section.

### 1.2 SUMMARY

A. This Section includes the following:

1. Roof deck.
2. Acoustical cellular roof deck.
3. Composite floor deck.
4. Acoustical cellular composite floor deck.

B. Related Sections include the following:

1. Division 03 Section "Cast-in-Place Concrete" for concrete fill.
2. Division 05 Section "Structural Steel" for shop- and field-welded shear connectors.
3. Division 05 Section "Metal Fabrications" for framing deck openings with miscellaneous steel shapes.
4. Division 09 painting Sections for repair painting of primed deck.
5. Division 16 Section "Underfloor Raceways" for preset inserts, activation kits, after set inserts, service fittings, header ducts, and trench header ducts used with cellular floor-deck systems.

### 1.3 SUBMITTALS

A. Product Data: For each type of deck, accessory, and product indicated.

B. Shop Drawings: Show layout and types of deck panels, anchorage details, reinforcing channels, pattern at deck openings, special jointing, accessories, and attachments to other construction.

C. Product Certificates: For each type of steel deck, signed by product manufacturer.

D. Welding certificates.

E. Field quality-control test and inspection reports.

F. Product Test Reports: Based on evaluation of comprehensive tests performed by a qualified testing agency, indicating that each of the following complies with requirements:

1. Power-actuated mechanical fasteners.

NOT FOR BIDDING

2. Acoustical roof deck.
3. Acoustical floor deck.

G. Research/Evaluation Reports: For steel deck.

## 1.4 QUALITY ASSURANCE

A. Testing Agency Qualifications: An independent agency qualified according to ASTM E 329 for testing indicated.

B. Welding: Qualify procedures and personnel according to AWS D1.3, "Structural Welding Code - Sheet Steel."

C. Fire-Test-Response Characteristics: Where indicated, provide steel deck units identical to those tested for fire resistance per ASTM E 119 by a testing and inspecting agency acceptable to authorities having jurisdiction.

1. Fire-Resistance Ratings: Indicated by design designations of applicable testing and inspecting agency.
2. Steel deck units shall be identified with appropriate markings of applicable testing and inspecting agency.

D. AISI Specifications: Comply with calculated structural characteristics of steel deck according to AISI's "North American Specification for the Design of Cold-Formed Steel Structural Members."

E. Electrical Raceway Units: Provide UL-labeled cellular floor-deck units complying with UL 209 and listed in UL's "Electrical Construction Equipment Directory" for use with standard header ducts and outlets for electrical distribution systems.

F. FMG Listing: Provide steel roof deck evaluated by FMG and listed in its "Approval Guide, Building Materials" for Class 1 fire rating and Class 1-90 windstorm ratings.

## 1.5 DELIVERY, STORAGE, AND HANDLING

A. Protect steel deck from corrosion, deformation, and other damage during delivery, storage, and handling.

B. Stack steel deck on platforms or pallets and slope to provide drainage. Protect with a waterproof covering and ventilate to avoid condensation.

1. Protect and ventilate acoustical cellular roof deck with factory-installed insulation to maintain insulation free of moisture.

NOT FOR BIDDING

1.6 COORDINATION

A. Coordinate installation of sound-absorbing insulation strips in topside ribs of acoustical deck with roofing installation specified in Division 07 to ensure protection of insulation strips against damage from effects of weather and other causes.

PART 2 - PRODUCTS

2.1 MANUFACTURERS

A. Available Manufacturers: Subject to compliance with requirements, manufacturers offering products that may be incorporated into the Work include, but are not limited to, the following:

B. Manufacturers: Subject to compliance with requirements, provide products by one of the following:

1. Steel Deck:

a. ASC Profiles, Inc.
b. Canam Steel Corp.;The Canam Manac Group.
c. Consolidated Systems, Inc.
d. DACS, Inc.
e. D-Mac Industries Inc.
f. Epic Metals Corporation.
g. Marlyn Steel Decks, Inc.
h. New Millennium Building Systems, LLC.
i. Nucor Corp.; Vulcraft Division.
j. Roof Deck, Inc.
k. United Steel Deck, Inc.
l. Valley Joist; Division of EBSCO Industries, Inc.
m. Verco Manufacturing Co.
n. Wheeling Corrugating Company; Div. of Wheeling-Pittsburgh Steel Corporation.

2.2 ROOF DECK

A. Steel Roof Deck: Fabricate panels, without top-flange stiffening grooves, to comply with "SDI Specifications and Commentary for Steel Roof Deck," in SDI Publication No. 30, and with the following:

1. Prime-Painted Steel Sheet: ASTM A 1008/A 1008M, Structural Steel (SS), Grade 33 minimum, shop primed with manufacturer's standard baked-on, rust-inhibitive primer.

a. Color: Manufacturer's standard

2. Galvanized Steel Sheet: ASTM A 653/A 653M, Structural Steel (SS), Grade 33 zinc coating.
3. Deck Profile: As indicated.
4. Profile Depth: As indicated.

NOT FOR BIDDING

5. Design Uncoated-Steel Thickness: As indicated.
6. Span Condition: Triple span or more.
7. Side Laps: Overlapped.

## 2.3 ACOUSTICAL ROOF DECK

A. Acoustical Steel Roof Deck: Fabricate panels, without top-flange stiffening grooves, to comply with "SDI Specifications and Commentary for Steel Roof Deck," in SDI Publication No. 30, and with the following:

1. Prime-Painted Steel Sheet: ASTM A 1008/A 1008M, Structural Steel (SS), Grade 33 minimum, shop primed with manufacturer's standard baked-on rust-inhibitive primer.

   a. Color: Manufacturer's standard
2. Galvanized and Shop-Primed Steel Sheet: ASTM A 653/A 653M, Structural Steel (SS), Grade 33 zinc coating; cleaned, pretreated, and primed with manufacturer's standard baked-on, rust-inhibitive primer.

   a. Color: Manufacturer's standard
3. Deck Profile: As indicated
4. Cellular Deck Profile: As indicated
5. Profile Depth: As indicated
6. Design Uncoated-Steel Thickness: As indicated
7. Design Uncoated-Steel Thicknesses; Deck Unit/Bottom Plate: As indicated
8. Span Condition: Triple span or more
9. Side Laps: Overlapped
10. Acoustical Perforations: Cellular deck units with manufacturer's standard perforated flat-bottom plate welded to ribbed deck.
11. Sound-Absorbing Insulation: Manufacturer's standard pre-molded roll or strip of glass or mineral fiber.
    a. Installation of sound-absorbing insulation is specified in Division 07 Section
12. Acoustical Performance: NRC 0.60 for 1 ½" roof deck depth and NRC 0.70 for 3" roof deck depth, tested according to ASTM C 423 or as indicated on drawings.

## 2.4 COMPOSITE FLOOR DECK

A. Composite Steel Floor Deck: Fabricate panels, with integrally embossed or raised pattern ribs and interlocking side laps, to comply with "SDI Specifications and Commentary for Composite Steel Floor Deck," in SDI Publication No. 30, with the minimum section properties indicated, and with the following:
1. Galvanized Steel Sheet: ASTM A 653/A 653M, Structural Steel (SS), Grade 33 G60 zinc coating.
2. Profile Depth: As indicated.
3. Design Uncoated-Steel Thickness: As indicated.
4. Span Condition: Triple span or more.

NOT FOR BIDDING

## 2.5 ACOUSTICAL CELLULAR COMPOSITE FLOOR DECK

A. Acoustical Cellular Composite Steel Floor Deck: Fabricate panels, with integrally embossed or raised pattern ribs and interlocking side laps, to comply with "SDI Specifications and Commentary for Composite Steel Floor Deck," in SDI Publication No. 30, with the minimum section properties indicated, and with the following:
   1. Galvanized Steel Sheet: ASTM A 653/A 653M, Structural Steel (SS), Grade 33; G60 zinc coating.
   2. Cellular Deck Type: Composite
   3. Profile Depth: As indicated.
   4. Design Uncoated-Steel Thickness: As indicated.
   5. Design Uncoated-Steel Thicknesses; Deck Unit/Bottom Plate: As indicated
   6. Span Condition: Triple Span or more.
   7. Acoustical Perforations: Cellular deck units with manufacturer's standard perforated flat-bottom plate welded to ribbed deck.
   8. Sound-Absorbing Insulation: Manufacturer's standard premolded roll or strip of glass or mineral fiber.

      a. Factory install sound-absorbing insulation into cells of cellular deck.
      b. Installation of sound-absorbing insulation is specified in Division 07 Section

   9. Acoustical Performance: NRC 0.70 for 2" composite floor deck tested according to ASTM C 423 or as indicated on drawings.

## 2.6 ACCESSORIES

A. General: Provide manufacturer's standard accessory materials for deck that comply with requirements indicated.

B. Mechanical Fasteners: Corrosion-resistant, low-velocity, power-actuated or pneumatically driven carbon-steel fasteners; or self-drilling, self-threading screws.

C. Side-Lap Fasteners: Corrosion-resistant, hexagonal washer head; self-drilling, carbon-steel screws, No. 10 (4.8-mm) minimum diameter.

D. Flexible Closure Strips: Vulcanized, closed-cell, synthetic rubber.

E. Miscellaneous Sheet Metal Deck Accessories: Steel sheet, minimum yield strength of 33,000 psi (230 MPa), not less than 0.0359-inch (0.91-mm) design uncoated thickness, of same material and finish as deck; of profile indicated or required for application.

F. Pour Stops and Girder Fillers: Steel sheet, minimum yield strength of 33,000 psi (230 MPa), of same material and finish as deck, and of thickness and profile As indicated.

G. Column Closures, End Closures, Z-Closures, and Cover Plates: Steel sheet, of same material, finish, and thickness as deck, unless otherwise indicated.

H. Piercing Hanger Tabs: Piercing steel sheet hanger attachment devices for use with floor deck.

NOT FOR BIDDING

I. Weld Washers: Uncoated steel sheet, shaped to fit deck rib, 0.0598 inch (1.52 mm) thick, with factory-punched hole of 3/8-inch (9.5-mm) minimum diameter.

J. Recessed Sump Pans: Single-piece steel sheet, 0.0747 inch (1.90 mm) thick, of same material and finish as deck, with 3-inch- (76-mm-) wide flanges and sloped recessed pans of 1-1/2-inch (38-mm) minimum depth. For drains, cut holes in the field.

K. Flat Sump Plate: Single-piece steel sheet, 0.0747 inch (1.90 mm) thick, of same material and finish as deck. For drains, cut holes in the field.

L. Galvanizing Repair Paint: SSPC-Paint 20 or DOD-P-21035, with dry film containing a minimum of 94 percent zinc dust by weight.

M. Repair Paint: Manufacturer's standard rust-inhibitive primer of same color as primer.

PART 3 - EXECUTION

3.1 EXAMINATION

A. Examine supporting frame and field conditions for compliance with requirements for installation tolerances and other conditions affecting performance.

3.2 INSTALLATION, GENERAL

A. Install deck panels and accessories according to applicable specifications and commentary in SDI Publication No. 30, manufacturer's written instructions, and requirements in this Section.

B. Install temporary shoring before placing deck panels, if required to meet deflection limitations.

C. Locate deck bundles to prevent overloading of supporting members.

D. Place deck panels on supporting frame and adjust to final position with ends accurately aligned and bearing on supporting frame before being permanently fastened. Do not stretch or contract side-lap interlocks.

Align cellular deck panels over full length of cell runs and align cells at ends of abutting panels.

E. Place deck panels flat and square and fasten to supporting frame without warp or deflection.

F. Cut and neatly fit deck panels and accessories around openings and other work projecting through or adjacent to deck.

G. Provide additional reinforcement and closure pieces at openings as required for strength, continuity of deck, and support of other work.

H. Comply with AWS requirements and procedures for manual shielded metal arc welding, appearance and quality of welds, and methods used for correcting welding work.

NOT FOR BIDDING

I. Mechanical fasteners may be used in lieu of welding to fasten deck. Locate mechanical fasteners and install according to deck manufacturer's written instructions.

## 3.3 ROOF-DECK INSTALLATION

A. Fasten roof-deck panels to steel supporting members by arc spot (puddle) welds of the surface diameter indicated or arc seam welds with an equal perimeter that is not less than 1-1/2 inches (38 mm) long, and as follows:

1. Weld Diameter: 5/8 inch (16 mm) nominal.
2. Weld Spacing: Weld edge and interior ribs of deck units with a minimum of two welds per deck unit at each support. Space welds 18 inches (450 mm) apart, maximum or as indicated.
3. Weld Washers: Install weld washers at each weld location.

B. Side-Lap and Perimeter Edge Fastening: Fasten side laps and perimeter edges of panels between supports, at intervals not exceeding the lesser of 1/2 of the span or 36 inches (910 mm)], and as follows:

1. Mechanically fasten with self-drilling, No. 10 (4.8-mm-) diameter or larger, carbon-steel screws.
2. Mechanically clinch or button punch.
3. Fasten with a minimum of 1-1/2-inch- (38-mm-) long welds.

C. End Bearing: Install deck ends over supporting frame with a minimum end bearing of 1-1/2 inches (38 mm), with end joints as follows:

1. End Joints: Lapped 2 inches (51 mm) minimum.

D. Roof Sump Pans and Sump Plates: Install over openings provided in roof deck and weld or mechanically fasten flanges to top of deck. Space welds or mechanical fasteners not more than 12 inches (305 mm) apart with at least one weld or fastener at each corner.

1. Install reinforcing channels or zees in ribs to span between supports and weld or mechanically fasten.

E. Miscellaneous Roof-Deck Accessories: Install ridge and valley plates, finish strips, end closures, and reinforcing channels according to deck manufacturer's written instructions. Weld or mechanically fasten to substrate to provide a complete deck installation.

1. Weld cover plates at changes in direction of roof-deck panels, unless otherwise indicated.

F. Flexible Closure Strips: Install flexible closure strips over partitions, walls, and where indicated. Install with adhesive according to manufacturer's written instructions to ensure complete closure.

G. Sound-Absorbing Insulation: Installation into topside ribs of deck as specified in Division 07

NOT FOR BIDDING

## 3.4 FLOOR-DECK INSTALLATION

A. Fasten floor-deck panels to steel supporting members by arc spot (puddle) welds of the surface diameter indicated and as follows:

1. Weld Diameter: 5/8 inch (16 mm) nominal.
2. Weld Spacing: Weld edge ribs of panels at each support. Space additional welds an average of 12 inches (305 mm) apart, but not more than 18 inches (457 mm) apart.
3. Weld Spacing: Space and locate welds as indicated.
4. Weld Washers: Install weld washers at each weld location.

B. Side-Lap and Perimeter Edge Fastening: Fasten side laps and perimeter edges of panels between supports, at intervals not exceeding the lesser of half of the span or 36 inches (910 mm), and as follows:

1. Mechanically fasten with self-drilling, No. 10 (4.8-mm) diameter or larger, carbon-steel screws.
2. Mechanically clinch or button punch.
3. Fasten with a minimum of 1-1/2-inch- (38-mm)-long welds.

C. End Bearing: Install deck ends over supporting frame with a minimum end bearing of 1-1/2 inches (38 mm)with end joints as follows:

1. End Joints: Lapped

D. Pour Stops and Girder Fillers: Weld steel sheet pour stops and girder fillers to supporting structure according to SDI recommendations, unless otherwise indicated.

E. Floor-Deck Closures: Weld steel sheet column closures, cell closures, and Z-closures to deck, according to SDI recommendations, to provide tight-fitting closures at open ends of ribs and sides of deck.

F. Install piercing hanger tabs at 14 inches (355 mm) apart in both directions, within 9 inches (228 mm) of walls at ends, and not more than 12 inches (305 mm) from walls at sides, unless otherwise indicated.

## 3.5 FIELD QUALITY CONTROL

A. Testing Agency: Engage a qualified independent testing and inspecting agency to perform field tests and inspections and prepare test reports.

B. Field welds will be subject to inspection.

C. Testing agency will report inspection results promptly and in writing to Contractor and Architect.

D. Remove and replace work that does not comply with specified requirements.

E. Additional inspecting, at Contractor's expense, will be performed to determine compliance of corrected work with specified requirements.

NOT FOR BIDDING

3.6 REPAIRS AND PROTECTION

A. Galvanizing Repairs: Prepare and repair damaged galvanized coatings on both surfaces of deck with galvanized repair paint according to ASTM A 780 and manufacturer's written instructions.

B. Repair Painting: Wire brush and clean rust spots, welds, and abraded areas on **both surfaces** of prime-painted deck immediately after installation and apply repair paint.

1. Apply repair paint, of same color as adjacent shop-primed deck, to bottom surfaces of deck exposed to view.
2. Wire brushing, cleaning, and repair painting of bottom deck surfaces are included in Division 09 Section.

C. Provide final protection and maintain conditions to ensure that steel deck is without damage or deterioration at time of Substantial Completion.

END OF SECTION 053100

NOT FOR BIDDING

# SECTION 054000
# COLD-FORMED METAL FRAMING

## PART 1 - GENERAL

### 1.1 RELATED DOCUMENTS

A. Drawings and general provisions of the Contract, including General and Supplementary Conditions and Division 01 Specification Sections, apply to this Section.

### 1.2 SUMMARY

A. This Section includes the following:
   1. Exterior non-load-bearing wall framing.

B. Related Sections include the following:

   1. Division 05 Section "Metal Fabrications" for masonry shelf angles and connections.
   2. Division 09 Section "Non-Structural Metal Framing" for interior non-load-bearing, metal-stud framing and ceiling suspension assemblies.
   3. Division 09 Section "Gypsum Board Shaft Wall Assemblies" for interior non-load-bearing, metal-stud-framed, shaft-wall assemblies.

### 1.3 PERFORMANCE REQUIREMENTS

### 1.4 SUBMITTALS

A. Product Data: For each type of cold-formed metal framing product and accessory indicated.

B. Shop Drawings: Provide standard sections/details and product data for lightgage components and all lightgage accessories (clip angles, bridging, slide clips, etc.) for review by Engineer-of-Record.

C. Welding certificates.

D. Qualification Data: For testing agency.

E. Product Test Reports: From a qualified testing agency, unless otherwise stated, indicating that each of the following complies with requirements, based on evaluation of comprehensive tests for current products:

   1. Steel sheet.
   2. Expansion anchors.
   3. Power-actuated anchors.

NOT FOR BIDDING

4. Mechanical fasteners.
5. Vertical deflection clips.
6. Horizontal drift deflection clips
7. Miscellaneous structural clips and accessories.

F. Research/Evaluation Reports: For cold-formed metal framing.

## 1.5 QUALITY ASSURANCE

A. Testing Agency Qualifications: An independent testing agency, acceptable to authorities having jurisdiction, qualified according to ASTM E 329 to conduct the testing indicated.

B. Product Tests: Mill certificates or data from a qualified independent testing agency indicating steel sheet complies with requirements, including base-metal thickness, yield strength, tensile strength, total elongation, chemical requirements, and metallic-coating thickness.

C. Welding: Qualify procedures and personnel according to AWS D1.1/D1.1M, "Structural Welding Code--Steel," and AWS D1.3, "Structural Welding Code--Sheet Steel."

D. Fire-Test-Response Characteristics: Where indicated, provide cold-formed metal framing identical to that of assemblies tested for fire resistance per ASTM E 119 by a testing and inspecting agency acceptable to authorities having jurisdiction.

E. AISI Specifications and Standards: Comply with AISI's "North American Specification for the Design of Cold-Formed Steel Structural Members" and its "Standard for Cold-Formed Steel Framing - General Provisions."

1. Comply with AISI's "Standard for Cold-Formed Steel Framing - Truss Design."
2. Comply with AISI's "Standard for Cold-Formed Steel Framing - Header Design."

F. Comply with AISI's "Standard for Cold-Formed Steel Framing - Prescriptive Method for One and Two Family Dwellings."

G. Preinstallation Conference: Conduct conference at Project site to comply with requirements in Division 01 Section "Project Management and Coordination."

## 1.6 DELIVERY, STORAGE, AND HANDLING

A. Protect cold-formed metal framing from corrosion, deformation, and other damage during delivery, storage, and handling.

B. Store cold-formed metal framing, protect with a waterproof covering, and ventilate to avoid condensation.

NOT FOR BIDDING

PART 2 - PRODUCTS

2.1 MANUFACTURERS

A. Available Manufacturers: Subject to compliance with requirements, manufacturers offering cold-formed metal framing that may be incorporated into the Work include, but are not limited to, the following:

B. Manufacturers: Subject to compliance with requirements, provide cold-formed metal framing by one of the following:
1. AllSteel Products, Inc.
2. Craco Metals Manufacturing, LLC.
3. Dale/Incor.
4. Dietrich Metal Framing; a Worthington Industries Company
5. MarinoWare; a division of Ware Industries.
6. United Metal Products, Inc.

2.2 MATERIALS

A. Recycled Content of Steel Products: Provide products with an average recycled content of steel products so postconsumer recycled content plus one-half of preconsumer recycled content is not less than 25 percent.

B. Steel Sheet: ASTM A 1003/A 1003M, Structural Grade, Type H, metallic coated, of grade and coating weight as follows:

1. Grade: As Indicated & designed by CFMF engineer.
2. Coating: G60 (Z180).

C. Steel Sheet for Vertical Deflection and Drift Clips: ASTM A 653/A 653M, structural steel, zinc coated, of grade and coating as follows:

1. Grade: 50 (340), Class 1 or 2.
2. Coating: G60 (Z275).

2.3 EXTERIOR NON-LOAD-BEARING WALL FRAMING

A. Steel Studs: Manufacturer's standard C-shaped steel studs, of web depths indicated, punched, with stiffened flanges, and as follows:

1. Minimum Base-Metal Thickness: As indicated
2. Section Properties: As Indicated

B. Steel Track: Manufacturer's standard U-shaped steel track, of web depths indicated, unpunched, with unstiffened flanges, and as follows:

1. Minimum Base-Metal Thickness: As indicated

NOT FOR BIDDING

2. Flange Width: As Indicated

C. Vertical Deflection Clips: Manufacturer's standard bypass clips, capable of accommodating upward and downward vertical displacement of primary structure through positive mechanical attachment to stud web.

1. Available Manufacturers: Subject to compliance with requirements, manufacturers offering products that may be incorporated into the Work include, but are not limited to, the following:
2. Manufacturers: Subject to compliance with requirements, provide products by one of the following:

a. Dietrich Metal Framing; a Worthington Industries Company
b. MarinoWare, a division of Ware Industries.
c. SCAFCO Corporation
d. The Steel Network, Inc.

D. Double Deflection Tracks: Manufacturer's double, deep-leg, U-shaped steel tracks, consisting of nested inner and outer tracks; unpunched, with unstiffened flanges.

1. Outer Track: Of web depth to allow free vertical movement of inner track, with flanges designed to support horizontal and lateral loads and transfer them to the primary structure, and as follows:

a. Minimum Base-Metal Thickness: 18 gauge

b. Flange Width: As Indicated.

2. Inner Track: Of web depth indicated, and as follows:

a. Minimum Base-Metal Thickness: 18 gauge
b. Flange Width: As Indicated

E. Drift Clips: Manufacturer's standard bypass or head clips, capable of isolating wall stud from upward and downward vertical displacement and lateral drift of primary structure.

## 2.4 FRAMING ACCESSORIES

A. Fabricate steel-framing accessories from steel sheet, ASTM A 1003/A 1003M, Structural Grade, Type H, metallic coated, of same grade and coating weight used for framing members.

B. Provide accessories of manufacturer's standard thickness and configuration, unless otherwise indicated, as follows:

1. Supplementary framing.
2. Bracing, bridging, and solid blocking.
3. Web stiffeners.
4. Anchor clips.

NOT FOR BIDDING

5. End clips.
6. Foundation clips.
7. Gusset plates.
8. Stud kickers, knee braces, and girts.
9. Joist hangers and end closures.
10. Hole reinforcing plates.
11. Backer plates.

## 2.5 ANCHORS, CLIPS, AND FASTENERS

A. Steel Shapes and Clips: ASTM A 36/A 36M, zinc coated by hot-dip process according to ASTM A 123/A 123M.

B. Anchor Bolts: ASTM F 1554, Grade 36, threaded carbon-steel bolts and carbon-steel nuts; and flat, hardened-steel washers; zinc coated.

C. Expansion Anchors: Fabricated from corrosion-resistant materials, with capability to sustain, without failure, a load equal to 5 times design load, as determined by testing per ASTM E 488 conducted by a qualified independent testing agency.

D. Power-Actuated Anchors: Fastener system of type suitable for application indicated, fabricated from corrosion-resistant materials, with capability to sustain, without failure, a load equal to 10 times design load, as determined by testing per ASTM E 1190 conducted by a qualified independent testing agency.

E. Mechanical Fasteners: ASTM C 1513, corrosion-resistant-coated, self-drilling, self-tapping steel drill screws.

1. Head Type: Low-profile head beneath sheathing, manufacturer's standard elsewhere.

F. Welding Electrodes: Comply with AWS standards.

## 2.6 MISCELLANEOUS MATERIALS

A. Galvanizing Repair Paint: ASTM A 780.

B. Cement Grout: Portland cement, ASTM C 150, Type I; and clean, natural sand, ASTM C 404. Mix at ratio of 1 part cement to 2-1/2 parts sand, by volume, with minimum water required for placement and hydration.

C. Nonmetallic, Nonshrink Grout: Premixed, nonmetallic, noncorrosive, nonstaining grout containing selected silica sands, portland cement, shrinkage-compensating agents, and plasticizing and water-reducing agents, complying with ASTM C 1107, with fluid consistency and 30-minute working time.

D. Shims: Load bearing, high-density multimonomer plastic, nonleaching.

NOT FOR BIDDING

E. Sealer Gaskets: Closed-cell neoprene foam, 1/4 inch (6.4 mm) thick, selected from manufacturer's standard widths to match width of bottom track or rim track members.

## 2.7 FABRICATION

A. Fabricate cold-formed metal framing and accessories plumb, square, and true to line, and with connections securely fastened, according to referenced AISI's specifications and standards, manufacturer's written instructions, and requirements in this Section.

1. Fabricate framing assemblies using jigs or templates.
2. Cut framing members by sawing or shearing; do not torch cut.
3. Fasten cold-formed metal framing members by welding, screw fastening, clinch fastening, or riveting as standard with fabricator. Wire tying of framing members is not permitted.

   a. Comply with AWS D1.3 requirements and procedures for welding, appearance and quality of welds, and methods used in correcting welding work.
   b. Locate mechanical fasteners and install according to Shop Drawings, with screw penetrating joined members by not less than three exposed screw threads.

4. Fasten other materials to cold-formed metal framing by welding, bolting, or screw fastening, according to Shop Drawings.

B. Reinforce, stiffen, and brace framing assemblies to withstand handling, delivery, and erection stresses. Lift fabricated assemblies to prevent damage or permanent distortion.

C. Fabrication Tolerances: Fabricate assemblies level, plumb, and true to line to a maximum allowable tolerance variation of 1/8 inch in 10 feet (1:960) and as follows:

1. Spacing: Space individual framing members no more than plus or minus 1/8 inch (3 mm) from plan location. Cumulative error shall not exceed minimum fastening requirements of sheathing or other finishing materials.
2. Squareness: Fabricate each cold-formed metal framing assembly to a maximum out-of-square tolerance of 1/8 inch (3 mm).

# PART 3 - EXECUTION

## 3.1 EXAMINATION

A. Examine supporting substrates and abutting structural framing for compliance with requirements for installation tolerances and other conditions affecting performance.

1. Proceed with installation only after unsatisfactory conditions have been corrected.

NOT FOR BIDDING

## 3.2 PREPARATION

A. Before sprayed fire-resistive materials are applied, attach continuous angles, supplementary framing, or tracks to structural members indicated to receive sprayed fire-resistive materials.

B. After applying sprayed fire-resistive materials, remove only as much of these materials as needed to complete installation of cold-formed framing without reducing thickness of fire-resistive materials below that are required to obtain fire-resistance rating indicated. Protect remaining fire-resistive materials from damage.

C. Install load bearing shims or grout between the underside of wall bottom track or rim track and the top of foundation wall or slab at stud or joist locations to ensure a uniform bearing surface on supporting concrete or masonry construction.

D. Install sealer gaskets to isolate the underside of wall bottom track or rim track and the top of foundation wall or slab at stud or joist locations.

## 3.3 INSTALLATION, GENERAL

A. Cold-formed metal framing may be shop or field fabricated for installation, or it may be field assembled.

B. Install cold-formed metal framing according to AISI's "Standard for Cold-Formed Steel Framing - General Provisions" and to manufacturer's written instructions unless more stringent requirements are indicated.

C. Install shop- or field-fabricated, cold-formed framing and securely anchor to supporting structure.

1. Screw, bolt, or weld wall panels at horizontal and vertical junctures to produce flush, even, true-to-line joints with maximum variation in plane and true position between fabricated panels not exceeding 1/16 inch (1.6 mm).

D. Install cold-formed metal framing and accessories plumb, square, and true to line, and with connections securely fastened.

1. Cut framing members by sawing or shearing; do not torch cut.
2. Fasten cold-formed metal framing members by welding, screw fastening, clinch fastening, or riveting. Wire tying of framing members is not permitted.

   a. Comply with AWS D1.3 requirements and procedures for welding, appearance and quality of welds, and methods used in correcting welding work.
   b. Locate mechanical fasteners and install according to Shop Drawings, and complying with requirements for spacing, edge distances, and screw penetration.

E. Install framing members in one-piece lengths unless splice connections are indicated for track or tension members.

NOT FOR BIDDING

F. Install temporary bracing and supports to secure framing and support loads comparable in intensity to those for which structure was designed. Maintain braces and supports in place, undisturbed, until entire integrated supporting structure has been completed and permanent connections to framing are secured.

G. Do not bridge building expansion and control joints with cold-formed metal framing. Independently frame both sides of joints.

H. Install insulation, specified in Division 07 Section "Thermal Insulation," in built-up exterior framing members, such as headers, sills, boxed joists, and multiple studs at openings that are inaccessible on completion of framing work.

I. Fasten hole reinforcing plate over web penetrations that exceed size of manufacturer's standard punched openings.

J. Erection Tolerances: Install cold-formed metal framing level, plumb, and true to line to a maximum allowable tolerance variation of 1/8 inch in 10 feet (1:960) and as follows:

1. Space individual framing members no more than plus or minus 1/8 inch (3 mm) from plan location. Cumulative error shall not exceed minimum fastening requirements of sheathing or other finishing materials.

## 3.4 EXTERIOR NON-LOAD-BEARING WALL INSTALLATION

A. Install continuous tracks sized to match studs. Align tracks accurately and securely anchor to supporting structure as indicated.

B. Fasten both flanges of studs to top and bottom track, unless otherwise indicated. Space studs as follows:

1. Stud Spacing: As Indicated by CFMF engineer with maximum 16” o/c.

C. Set studs plumb, except as needed for diagonal bracing or required for nonplumb walls or warped surfaces and similar requirements.

D. Isolate non-load-bearing steel framing from building structure to prevent transfer of vertical loads while providing lateral support.
1. Install double deep-leg deflection tracks and anchor outer track to building structure.
2. Connect vertical deflection clips to bypassing studs and anchor to building structure.
3. Connect drift clips to cold formed metal framing and anchor to building structure.

E. Install horizontal bridging in wall studs, spaced in rows indicated on Shop Drawings but not more than 48 inches (1220 mm) apart. Fasten at each stud intersection.

1. Top Bridging for Single Deflection Track: Install row of horizontal bridging within 12 inches (305 mm) of single deflection track. Install a combination of flat, taut, steel sheet straps of width and thickness indicated and stud or stud-track solid blocking of width and

NOT FOR BIDDING

thickness matching studs. Fasten flat straps to stud flanges and secure solid blocking to stud webs or flanges.

a. Install solid blocking at centers indicated.

2. Bridging: Cold-rolled steel channel, welded or mechanically fastened to webs of punched studs.
3. Bridging: Combination of flat, taut, steel sheet straps of width and thickness indicated and stud-track solid blocking of width and thickness to match studs. Fasten flat straps to stud flanges and secure solid blocking to stud webs or flanges.
4. Bridging: Proprietary bridging bars installed according to manufacturer's written instructions.

F. Install miscellaneous framing and connections, including stud kickers, web stiffeners, clip angles, continuous angles, anchors, fasteners, and stud girts, to provide a complete and stable wall-framing system.

## 3.5 FIELD QUALITY CONTROL

A. Testing: Owner will engage a qualified independent testing and inspecting agency to perform field tests and inspections and prepare test reports.

B. Field and shop welds will be subject to testing and inspecting.

C. Testing agency will report test results promptly and in writing to Contractor and Architect.

D. Remove and replace work where test results indicate that it does not comply with specified requirements.

E. Additional testing and inspecting, at Contractor's expense, will be performed to determine compliance of replaced or additional work with specified requirements.

## 3.6 REPAIRS AND PROTECTION

A. Galvanizing Repairs: Prepare and repair damaged galvanized coatings on fabricated and installed cold-formed metal framing with galvanized repair paint according to ASTM A 780 and manufacturer's written instructions.

B. Provide final protection and maintain conditions, in a manner acceptable to manufacturer and Installer, that ensure that cold-formed metal framing is without damage or deterioration at time of Substantial Completion.

END OF SECTION 054000

NOT FOR BIDDING

# SECTION 055000
# METAL FABRICATIONS

## PART 1 GENERAL

1.01 SECTION INCLUDES

A. Shop fabricated metal items as scheduled herein.

B. Shop fabricated steel, aluminum, and metal items.

C. Prefabricated ladders and ship ladders.

1.02 RELATED REQUIREMENTS

A. Section 033000 - Cast-in-Place Concrete: Placement of metal fabrications in concrete.

B. Section 042000 - Unit Masonry: Placement of metal fabrications in masonry.

C. Section 051200: Structural steel anchor bolts and related work.

D. Section 05 5100 - Metal Stairs.

E. Section 055213 - Pipe and Tube Railings.

F. Section 09 9000 - Paints and Coatings

1.03 REFERENCE STANDARDS

A. AAMA 611 - Voluntary Specification for Anodized Architectural Aluminum; 2014 (2015 Errata).

B. ANSI A14.3 - American National Standard for Ladders -- Fixed -- Safety Requirements; 2008.

C. ASTM A36/A36M - Standard Specification for Carbon Structural Steel; 2014.

D. ASTM A53/A53M - Standard Specification for Pipe, Steel, Black and Hot-Dipped, Zinc-Coated, Welded and Seamless; 2012.

E. ASTM A123/A123M - Standard Specification for Zinc (Hot-Dip Galvanized) Coatings on Iron and Steel Products; 2015.

F. ASTM A153/A153M - Standard Specification for Zinc Coating (Hot-Dip) on Iron and Steel Hardware; 2016a.

G. ASTM A283/A283M - Standard Specification for Low and Intermediate Tensile Strength Carbon Steel Plates; 2013.

H. ASTM A307 - Standard Specification for Carbon Steel Bolts, Studs, and Threaded Rod 60 000 PSI Tensile Strength; 2014.

I. ASTM A500/A500M - Standard Specification for Cold-Formed Welded and Seamless Carbon Steel Structural Tubing in Rounds and Shapes; 2013.

J. ASTM A501/A501M - Standard Specification for Hot-Formed Welded and Seamless Carbon Steel Structural Tubing; 2014.

K. ASTM A653/A653M - Standard Specification for Steel Sheet, Zinc-Coated (Galvanized) or Zinc-Iron Alloy-Coated (Galvannealed) by the Hot-Dip Process; 2015.

L. ASTM B209 - Standard Specification for Aluminum and Aluminum-Alloy Sheet and Plate; 2014.

M. ASTM B209M - Standard Specification for Aluminum and Aluminum-Alloy Sheet and Plate (Metric); 2014.

N. ASTM B210 - Standard Specification for Aluminum and Aluminum-Alloy Drawn Seamless Tubes; 2012.

NOT FOR BIDDING

O. ASTM B210M - Standard Specification for Aluminum and Aluminum-Alloy Drawn Seamless Tubes (Metric); 2012.

P. ASTM B221 - Standard Specification for Aluminum and Aluminum-Alloy Extruded Bars, Rods, Wire, Profiles, and Tubes; 2014.

Q. ASTM B221M - Standard Specification for Aluminum and Aluminum-Alloy Extruded Bars, Rods, Wire, Profiles, and Tubes (Metric); 2013.

R. ASTM F3125/F3125M - Standard Specification for High Strength Structural Bolts, Steel and Alloy Steel, Heat Treated, 120 ksi (830 MPa) and 150 ksi (1040 MPa) Minimum Tensile Strength, Inch and Metric Dimensions; 2015a.

S. AWS A2.4 - Standard Symbols for Welding, Brazing, and Nondestructive Examination; 2012.

T. AWS D1.1/D1.1M - Structural Welding Code - Steel; 2015 (Errata 2016).

U. AWS D1.2/D1.2M - Structural Welding Code - Aluminum; 2008.

V. SSPC-Paint 15 - Steel Joist Shop Primer/Metal Building Primer; 1999 (Ed. 2004).

W. SSPC-Paint 20 - Zinc-Rich Primers (Type I, "Inorganic," and Type II, "Organic"); 2002 (Ed. 2004).

X. SSPC-SP 2 - Hand Tool Cleaning; 1982 (Ed. 2004).

1.04 SUBMITTALS

A. See Section 013000 - Administrative Requirements, for submittal procedures.

B. Shop Drawings: Indicate profiles, sizes, connection attachments, reinforcing, anchorage, size and type of fasteners, and accessories. Include erection drawings, elevations, and details where applicable.

1. Indicate welded connections using standard AWS A2.4 welding symbols. Indicate net weld lengths.

C. Welders' Certificates: Submit certification for welders employed on the project, verifying AWS qualification within the previous 12 months.

1.05 QUALITY ASSURANCE

A. Design fabricated items under direct supervision of a Professional Structural Engineer experienced in design of this Work and licensed in the State of Delaware.

**PART 2 PRODUCTS**

2.01 MATERIALS - STEEL

A. Steel Sections: ASTM A36/A36M.

B. Steel Tubing: ASTM A500, Grade B cold-formed, or ASTM A 501 hot-formed, structural tubing.

C. Plates: ASTM A283/A283M.

D. Pipe: ASTM A53/A53M, Grade B Schedule 40, black and hot-dip galvanized finish, as indicated.

E. Bolts, Nuts, and Washers: ASTM F3125/F3125M, Type 1, plain.

F. Welding Materials: AWS D1.1/D1.1M; type required for materials being welded.

G. Shop and Touch-Up Primer: SSPC-Paint 15, complying with VOC limitations of authorities having jurisdiction.

NOT FOR BIDDING

H. Touch-Up Primer for Galvanized Surfaces: SSPC-Paint 20, Type I - Inorganic, complying with VOC limitations of authorities having jurisdiction.

2.02 MATERIALS - ALUMINUM

A. Extruded Aluminum: ASTM B221 (ASTM B221M), 6063 alloy, T6 temper.

B. Sheet Aluminum: ASTM B209 (ASTM B209M), 5052 alloy, H32 or H22 temper.

C. Aluminum-Alloy Drawn Seamless Tubes: ASTM B210 (ASTM B210M), 6063 alloy, T6 temper.

D. Bolts, Nuts, and Washers: Stainless steel.

E. Welding Materials: AWS D1.2/D1.2M; type required for materials being welded.

2.03 FABRICATION

A. Fit and shop assemble items in largest practical sections, for delivery to site.

B. Fabricate items with joints tightly fitted and secured.

C. Continuously seal joined members by continuous welds.

D. Grind exposed joints flush and smooth with adjacent finish surface. Make exposed joints butt tight, flush, and hairline. Ease exposed edges to small uniform radius.

E. Exposed Mechanical Fastenings: Flush countersunk screws or bolts; unobtrusively located; consistent with design of component, except where specifically noted otherwise.

F. Supply components required for anchorage of fabrications. Fabricate anchors and related components of same material and finish as fabrication, except where specifically noted otherwise.

2.04 FABRICATED ITEMS

A. Supply and install metal fabrications listed below complete with anchorage and attachments necessary for installation.

B. Steel lintels:
   1. Provide hot dip galvanized loose steel lintels in masonry. Lintels shall be provided for all exterior masonry veneer openings and as shown on the drawings. Bear lintels 8" on masonry at each jamb.
   2. Refer to structural drawings for sizes.

C. Steel support for vanity:
   1. Provide welded steel supports for vanities.
   2. Prepare for attachment of wood blocking and countertop as specified elsewhere and shown on the drawings.

D. Elevator shaft hoist beam: Size per structural drawings.

E. Elevator sill angles:
   1. Provide 5" x 5" x 5/16" sill angles at each elevator entrance.
   2. Secure to floor structure and fill with grout as directed on the elevator shop drawings

F. Elevator pit ladder: Provide elevator pit ladder where shown on the drawings.
   1. Ladder shall extend a min. of 4'-0" above finished floor.
   2. Provide 2-1/2" x 1/2" continuous structural steel flat bar side rails with eased edges, spaced 1'-6" apart.
   3. Rungs shall be 1" square solid rungs with non-slip surface on top of each rung.
      a. Coat rung with aluminum oxide granules set in epoxy resin or use a type of manufactured rung which is filled with aluminum oxide grout.

NOT FOR BIDDING

b. Fit rungs in centerline of side rails, plug weld and grind smooth on outer face of rail.

4. Support ladder at top and bottom.
   a. Use brackets designed for adequate support and anchorage; weld to rails.
   b. Unless noted otherwise, hold ladder min. 7" clear of wall to centerline of rungs.

G. Metal Roof Ladders:
1. Manufacturer: O'Keeffe's, Inc.; 325 Newhall St. San Francisco, CA 94124. ASD. (888) 653-3333. http://www.okeeffes.com.
   a. Substitutions: See Section 016000
2. Exterior Fixed Roof Ladders: Tubular Rail Low Parapet Access Ladder with Platform and Return.
   a. Model 503 as manufactured by O'Keeffe's Inc.
   b. Walk-Through Rail and Roof Rail Extension: Not less than 3 feet 6 inches (1067 mm) above the landing and shall be fitted with deeply serrated square, tubular grab rails.
   c. Landing Platform: 1-1/2 inches (38 mm) or greater diameter, tubular aluminum guardrails and decks of serrated aluminum treads.
3. Interior Fixed Roof Ladders: Heavy Duty Tubular Rail Access Ladder.
   a. Model 501 as manufactured by O'Keeffe's Inc.
4. Ladder Materials
   a. Aluminum Sheet: Alloy 5005-H34 to comply with ASTM B209.
   b. Aluminum Extrusions: Alloy 6063-T6 to comply with ASTM B221.
5. Ladder finish: Clear Anodic Finish: AA-M10C22A41 Mechanical finish as fabricated. Architectural Class I, clear coating 0.018 mm or thicker.
6. Rungs: Not less than 1-1/4 inches (32 mm) in section and 18-3/8 inches (467mm) long, formed from tubular aluminum extrusions. Squared and deeply serrated on all sides.
   a. Rungs shall withstand a 1,000 pound (454 kg) load without deformation or failure.
7. Provide ladder cage for ladder runs 20 feet or greater.
8. Provide intermediate brackets in order to keep maximum bracket spacing at 10 feet on center. For exterior roof ladders, provide mounting bracket to wall to keep ladder rails above roof.
9. Heavy Duty Tubular Side Rails: Assembled from two interlocking aluminum extrusions no less than 1/8 inch (3 mm) wall thickness by 3 inches (76 mm) wide. Construction shall be self-locking stainless steel fasteners, full penetration TIG welds and clean, smooth and burr-free surfaces.

H. Steel Ship's Ladder (Followspot Platform)
1. Fabricate stairs, landings and component connections to support live loads of min. 100 lb./sq. ft. with deflection of stairs and landings not exceeding 1/360 of span.
2. Fabricate integral railings and component connections capable of resisting a lateral force of min. 200 lb. at any single point, without permanent damage or set.
3. Accurately form and fit components and connections.
4. Grind exposed edges and welds smooth and flush.
5. Provide necessary anchors, hangers and struts.
6. Provide nosings as indicated.
7. Shop prime in two coats.
8. Do not prime surface to be field welded or cast in concrete.
9. Exception: grating at landings and treads to be galvanized.
10. Edges of landings and tread to have abrasive nosings and top surface of all grating to be non-slip.

NOT FOR BIDDING

I. Steel edge angle at overhead coiling doors: size and configuration as shown; hot-dipped galvanized.

J. Steel channel frame at overhead coiling doors: size and configuration as shown; hot-dipped galvanized.

2.05 MANUFACTURED PRODUCTS

A. Supply and install metal fabrications listed below complete with anchorage and attachments necessary for installation.

B. Bollards: Steel pipe, concrete filled, crowned cap, as detailed; galvanized finish.
   1. 6" G-90 galvanized standard weight steel pipe.
   2. Fill with 3,000 psi concrete.
   3. Slightly overfill top for drainage.
   4. Location: Loading and Mechanical Areas.

2.06 FINISHES - STEEL

A. Prime paint steel items.
   1. Exceptions: Galvanize items to be embedded in concrete or masonry.
   2. Exceptions: Do not prime surfaces in direct contact with concrete, where field welding is required, and items to be covered with sprayed fireproofing.

B. Prepare surfaces to be primed in accordance with SSPC-SP2.

C. Clean surfaces of rust, scale, grease, and foreign matter prior to finishing.

D. Prime Painting: Two coats.

E. Galvanizing of Structural Steel Members: Galvanize after fabrication to ASTM A123/A123M requirements. Provide minimum 2.7 oz/sq ft galvanized coating.

F. Galvanizing of Non-structural Items: Galvanize after fabrication to ASTM A123/A123M requirements.

2.07 FINISHES - ALUMINUM

A. Exterior Aluminum Surfaces: Class I natural anodized.

B. Interior Aluminum Surfaces: Class I natural anodized.

C. Class I Natural Anodized Finish: AAMA 611 AA-M12C22A41 Clear anodic coating not less than 0.7 mils thick.

D. Apply one coat of bituminous paint to concealed aluminum surfaces in contact with cementitious or dissimilar materials.

2.08 FABRICATION TOLERANCES

A. Squareness: 1/8 inch maximum difference in diagonal measurements.

B. Maximum Offset Between Faces: 1/16 inch.

C. Maximum Misalignment of Adjacent Members: 1/16 inch.

D. Maximum Bow: 1/8 inch in 48 inches.

E. Maximum Deviation From Plane: 1/16 inch in 48 inches.

**PART 3 EXECUTION**

3.01 EXAMINATION

A. Verify that field conditions are acceptable and are ready to receive work.

NOT FOR BIDDING

3.02 PREPARATION

A. Clean and strip primed steel items to bare metal where site welding is required.

B. Supply setting templates to the appropriate entities for steel items required to be cast into concrete or embedded in masonry.

3.03 INSTALLATION

A. Install items plumb and level, accurately fitted, free from distortion or defects.

B. Provide for erection loads, and for sufficient temporary bracing to maintain true alignment until completion of erection and installation of permanent attachments.

C. Field weld components indicated on drawings and/or on shop drawings.

D. Perform field welding in accordance with AWS D1.1/D1.1M.

E. Obtain approval prior to site cutting or making adjustments not scheduled.

F. After erection, prime welds, abrasions, and surfaces not shop primed or galvanized, except surfaces to be in contact with concrete.

3.04 TOLERANCES

A. Maximum Variation From Plumb: 1/4 inch per story, non-cumulative.

B. Maximum Offset From True Alignment: 1/4 inch.

C. Maximum Out-of-Position: 1/4 inch.

**END OF SECTION**

NOT FOR BIDDING

# SECTION 055100
# METAL STAIRS

## PART 1 GENERAL

1.01 SECTION INCLUDES

A. Interior ornamental stairs.

B. Interior exit stairs.

C. Stairs with metal treads.

D. Structural steel stair framing and supports.

E. Handrails and guards.

1.02 RELATED REQUIREMENTS

A. Section 033000 - Cast-in-Place Concrete: Concrete fill in stair pans; mesh reinforcement for landings.

B. Section 042000 - Unit Masonry: Placement of metal fabrications in masonry.

C. Section 055000 - Metal Fabrications.

D. Section 055213 - Pipe and Tube Railings: Metal handrails and balusters other than specified in this section.

E. Section 057300 - Decorative Metal Railings.

F. Section 096600 - Terrazzo treads.

G. Section 099000 - Paints and Coatings.

H. Division 26 - LED Lighting integral to handrails.

1.03 REFERENCE STANDARDS

A. AISC 201 - AISC Certification Program for Structural Steel Fabricators, Standard for Steel Building Structures; 2006.

B. ASTM A6/A6M - Standard Specification for General Requirements for Rolled Structural Steel Bars, Plates, Shapes, and Sheet Piling; 2016.

C. ASTM A36/A36M - Standard Specification for Carbon Structural Steel; 2014.

D. ASTM A53/A53M - Standard Specification for Pipe, Steel, Black and Hot-Dipped, Zinc-Coated, Welded and Seamless; 2012.

E. ASTM A153/A153M - Standard Specification for Zinc Coating (Hot-Dip) on Iron and Steel Hardware; 2016a.

F. ASTM A283/A283M - Standard Specification for Low and Intermediate Tensile Strength Carbon Steel Plates; 2013.

G. ASTM A500/A500M - Standard Specification for Cold-Formed Welded and Seamless Carbon Steel Structural Tubing in Rounds and Shapes; 2013.

H. ASTM A501/A501M - Standard Specification for Hot-Formed Welded and Seamless Carbon Steel Structural Tubing; 2014.

I. ASTM A786/A786M - Standard Specification for Hot-Rolled Carbon, Low-Alloy, High-Strength Low-Alloy, and Alloy Steel Floor Plates; 2015.

J. ASTM E935 - Standard Test Methods for Performance of Permanent Metal Railing Systems and Rails for Buildings; 2013.

NOT FOR BIDDING

K. ASTM E985 - Standard Specification for Permanent Metal Railing Systems and Rails for Buildings; 2000 (Reapproved 2006).

L. ASTM F3125/F3125M - Standard Specification for High Strength Structural Bolts, Steel and Alloy Steel, Heat Treated, 120 ksi (830 MPa) and 150 ksi (1040 MPa) Minimum Tensile Strength, Inch and Metric Dimensions; 2015a.

M. ATBCB ADAAG - Americans with Disabilities Act Accessibility Guidelines; 2002.

N. AWS A2.4 - Standard Symbols for Welding, Brazing, and Nondestructive Examination; 2012.

O. AWS D1.1/D1.1M - Structural Welding Code - Steel; 2015 (Errata 2016).

P. NAAMM AMP 510 - Metal Stairs Manual; 1992, Fifth Edition.

Q. SSPC-Paint 15 - Steel Joist Shop Primer/Metal Building Primer; 1999 (Ed. 2004).

R. SSPC-SP 2 - Hand Tool Cleaning; 1982 (Ed. 2004).

S. UL 1994 - Luminous Egress Path Marking Systems; Current Edition, Including All Revisions.

1.04 SUBMITTALS

A. Shop Drawings: Indicate profiles, sizes, connection attachments, reinforcing, anchorage, size and type of fasteners, and accessories.
   1. Indicate welded connections using standard AWS A2.4 welding symbols. Indicate net weld lengths.
   2. Include the design engineer's seal and signature on each sheet of shop drawings.

B. Design Data: As required by authorities having jurisdiction.

C. Welders' Certificates.

D. Fabricator's Qualification Statement: Provide documentation showing steel fabricator is certified under AISC 201.

1.05 QUALITY ASSURANCE

A. Structural Designer Qualifications: Professional Structural Engineer experienced in design of this work and licensed in the State of Delaware, or personnel under direct supervision of such an engineer.

B. Drawing review: Structural Engineer of Record will review shop drawings for conformance with the contract documents and the loads specified. Corrections to the shop drawings required by Engineer's review shall not constitute a change in contract amount for pricing and detailing.

C. Welder Qualifications: Show certification of welders employed on the Work, verifying AWS qualification within the previous 12 months.

D. Fabricator Qualifications:
   1. A qualified steel fabricator that is certified by the American Institute for Steel Construction (AISC) under AISC 201.

E. A company specializing in manufacturing products specified in this section, with not less than ten years of documented experience.

**PART 2 PRODUCTS**

2.01 METAL STAIRS - GENERAL

A. Metal Stairs: Provide stairs of the design specified, complete with landing platforms, vertical and horizontal supports, railings, and guards, fabricated accurately for anchorage to each other and to building structure.

NOT FOR BIDDING

1. Regulatory Requirements: Provide stairs and railings complying with the most stringent requirements of local, state, and federal regulations; where requirements of the contract documents exceed those of regulations, comply with the contract documents.
2. Handrails: Comply with applicable accessibility requirements of ADA Standards.
3. Structural Design: Provide complete stair and railing assemblies complying with the applicable local code.
   a. Refer to structural drawings for stair construction notes and design loads.
4. Dimensions: As indicated on drawings.
5. Shop assemble components; disassemble into largest practical sections suitable for transport and access to site.
6. No sharp or rough areas on exposed travel surfaces and surfaces accessible to touch.
7. Separate dissimilar metals using paint or permanent tape.

B. Metal Jointing and Finish Quality Levels:
1. Architectural (Stair A): All joints as inconspicuous as possible, whether welded or mechanical.
   a. Welded Joints: Continuously welded and ground smooth and flush.
   b. Mechanical Joints: Butted tight, flush, and hairline; concealed fastenings only.
   c. Exposed Edges and Corners: Eased to small uniform radius.
   d. Metal Surfaces to be Painted: Sanded or ground smooth, suitable for highest quality gloss finish.
2. Commercial (typical unless otherwise noted): Exposed joints as inconspicuous as possible, whether welded or mechanical; underside of stair is covered by soffit, and is not considered exposed to view.
   a. Welded Joints: Intermittently welded on back side, filled with body putty, and sanded smooth and flush.
   b. Welds Exposed to View: Ground smooth and flush.
   c. Mechanical Joints: Butted tight, flush, and hairline.
   d. Bolts Exposed to View: Countersunk flat or oval head bolts; no exposed nuts.
   e. Exposed Edges and Corners: Eased to small uniform radius.
   f. Metal Surfaces to be Painted: Sanded or ground smooth, suitable for satin or matte finish.
3. Service (access stairs to mechanical areas, stage area catwalks): Exposed joints tight with face surfaces aligned; underside of stair not covered by soffit is not considered exposed to view.
   a. Welded Joints: Welded on back side wherever possible.
   b. Welds Exposed to View: Ground smooth; not required to be flush.
   c. Bolts Exposed to View: Countersunk flat or oval head bolts; no exposed nuts or screw threads.
   d. Metal Surfaces to be Painted: Sanded smooth, suitable for satin or matte finish.

C. Fasteners: Same material or compatible with materials being fastened; type consistent with design and specified quality level.

D. Anchors and Related Components: Same material and finish as item to be anchored, except where specifically indicated otherwise; provide all anchors and fasteners required.

2.02 METAL STAIRS WITH PRECAST TERRAZZO TREADS AND LANDINGS

A. Jointing and Finish Quality Level: Architectural, as defined above.

B. Risers: Closed.

NOT FOR BIDDING

C. Treads: Metal pan with precast terrazzo tread.
   1. Precast Concrete Terrazzo Tread Thickness: 2 inches, minimum. See Section 096616.
   2. Tread Pan Material: Steel sheet.
   3. Tread Pan Thickness: As required by design; 14 gage, 0.075 inch minimum.
   4. Pan Anchorage to Stringers: Continuously welded, from top or bottom.

D. Risers: Same material and thickness as tread pans.
   1. Riser/Nosing Profile: As shown on drawings.

E. Stringers: Rolled steel channels.
   1. Stringer Depth: As indicated on drawings.

F. Landings: Same construction as treads, supported and reinforced as required to achieve design load capacity, with precast terrazzo landings.

G. Railings: Refer to 05 7300 Decorative Metal Railings.

H. Finish: Shop- or factory-prime painted.

I. Under Side of Stair: Not exposed to view.

2.03 EXIT STAIRS (TYPICAL, U.O.N)

A. Jointing and Finish Quality Level: Commercial.

B. Risers: Closed.

C. Treads: Metal pan with concrete fill..
   1. Concrete Depth: 2 inches.
   2. Tread Pan Material: Steel sheet.
   3. Tread Pan Thickness: As required by design; 14 gage, 0.075 inch minimum.
   4. Pan Anchorage to Stringers: Continuously welded, from top or bottom.
   5. Concrete Reinforcement: None.
   6. Concrete Finish: For resilient floor covering.

D. Risers: Same material and thickness as tread pans.
   1. Riser/Nosing Profile: Vertical riser with underside of nosing sloped up from bottom of tread pan at not less than 60 degrees from horizontal, with rounded top of nosing of minimum radius.
   2. Nosing Depth: No more than 1 inch overhang.
   3. Nosing Return: Flush with top of concrete fill, not more than 1/2 inch wide.

E. Stringers: Rolled steel channels.
   1. Stringer Depth: 12 inches.
   2. End Closure: Sheet steel of same thickness as risers welded across ends.

F. Landings: Similar construction, using corrugated steel decking for concrete fill, supported and reinforced as required to achieve design load capacity.

G. Railings: As shown on drawings and specified below.

H. Guards - As shown on drawings and specified below.

I. Finish: Shop- or factory-prime painted.

J. Under Side of Stair: Not exposed to view.

2.04 METAL SERVICE STAIRS WITH METAL TREADS

A. Jointing and Finish Quality Level: Service, as defined above.

B. Risers: Closed.

NOT FOR BIDDING

C. Treads: Checkered steel plate.
   1. Tread Thickness: 1/4 inch, minimum.
   2. Anchorage to Stringers: Welded or bolted to carrier angles welded or bolted to stringers.

D. Risers: Steel sheet.
   1. Riser Thickness: As required by design; 14 gage, 0.075 inch minimum.
   2. Riser/Nosing Profile: Sloped riser with rounded nosing of minimum radius.

E. Stringers: Rolled steel channels.
   1. Stringer Depth: 10 inches.
   2. End Closure: Sheet steel of same thickness as risers welded across ends.

F. Landings: Same construction as treads, supported and reinforced as required to achieve design load capacity.

G. Railings: Steel pipe railings.

H. Finish: Shop- or factory-prime painted.

2.05 ORNAMENTAL STAIRS HANDRAILS AND GUARDS

A. See Section 057300 - Decorative Metal Railings.

2.06 EXIT STAIRS HANDRAILS AND GUARDS

A. Wall and Post-Mounted Handrails: Stainless Steel, Round pipe unless otherwise indicated.
   1. Outside Diameter: 1-1/4 inch, minimum, to 1-1/2 inches, maximum.

B. Guards:
   1. Top Rails: Stainless steel, round pipe unless otherwise indicated.
      a. Outside Diameter: 1-1/2 inch, minimum, to 2 inches, maximum.
   2. Infill at Picket Railings: Vertical pickets.
      a. Horizontal Spacing: Maximum 4 inches on center.
      b. Material: Solid steel bar.
      c. Shape: Square.
      d. Size: 1/2 inch square.
      e. Top Mounting: Welded to steel channel at underside of top rail.
      f. Bottom Mounting: Welded to 1-1/2" square bottom rail.
   3. End and Intermediate Posts: Square tube.
      a. Horizontal Spacing: As required to meet design loads.
      b. Mounting: Welded to top surface of stringer.

2.07 MATERIALS

A. Steel Sections: ASTM A 36/A 36M.

B. Steel Tubing: ASTM A500/A500M or ASTM A501/A501M structural tubing, round and shapes as indicated.

C. Steel Plates: ASTM A6/A6M or ASTM A283/A283M.

D. Pipe: ASTM A 53/A 53M, Grade B Schedule 40, black finish.

E. Ungalvanized Steel Sheet: Hot- or cold-rolled, except use cold-rolled where finished work will be exposed to view.
   1. Hot-Rolled Steel Sheet: ASTM A 1011/A 1011M, Designation CS (commercial steel); SS (Structural), Grade 33.
   2. Cold-Rolled Steel Sheet: ASTM A 1008/A 1008M, Designation CS (commercial steel); SS (Structural), Grade 33, Type1.

NOT FOR BIDDING

F. Checkered Plate: ASTM A786/A786M, rolled steel floor plate; manufacturer's standard pattern.

G. Concrete Fill: Type specified in Section 033000.

2.08 ACCESSORIES

A. Photoluminescent Nosing: Factory fabricated aluminum extrusion with replaceable embedded photoluminescent and slip-resistant strip, complies with UL 1994.
   1. Attachment: Provide manufacturer approved mechanical fasteners.
   2. Location: Changes in level at catwalk areas.

B. Steel Bolts, Nuts, and Washers: ASTM F3125/F3125M, Type 1, and galvanized to ASTM A153/A153M where connecting galvanized components.

C. Steel Bolts, Nuts, and Washers: ASTM A 325 (ASTM A 325M), Type 1.

D. Welding Materials: AWS D1.1/D1.1M; type required for materials being welded.

E. Shop and Touch-Up Primer: SSPC-Paint 15, complying with VOC limitations of authorities having jurisdiction.

2.09 SHOP FINISHING

A. Clean surfaces of rust, scale, grease, and foreign matter prior to finishing.

B. Do not prime surfaces in direct contact with concrete or where field welding is required.

C. Prime Painting: Use specified shop- and touch-up primer.
   1. Preparation of Steel: In accordance with SSPC-SP 2, Hand Tool Cleaning.
   2. Number of Coats: Two.

**PART 3 EXECUTION**

3.01 EXAMINATION

A. Verify that field conditions are acceptable and are ready to receive work.

3.02 PREPARATION

A. When field welding is required, clean and strip primed steel items to bare metal.

B. Supply items required to be embedded in masonry with setting templates.

3.03 INSTALLATION

A. Install components plumb and level, accurately fitted, free from distortion or defects.

B. Provide anchors, plates, angles, hangers, and struts required for connecting stairs to structure.

C. Allow for erection loads, and for sufficient temporary bracing to maintain true alignment until completion of erection and installation of permanent attachments.

D. Provide welded field joints where specifically indicated on drawings. Perform field welding in accordance with AWS D1.1/D1.1M.

E. Other field joints may be either welded or bolted provided the result complies with the limitations specified for jointing quality levels.

F. Obtain approval prior to site cutting or creating adjustments not scheduled.

G. After erection, prime welds, abrasions, and surfaces not shop primed, except surfaces to be in contact with concrete.

3.04 TOLERANCES

A. Maximum Variation From Plumb: 1/4 inch per story, non-cumulative.

NOT FOR BIDDING

B. Maximum Offset From True Alignment: 1/4 inch.

**END OF SECTION**

NOT FOR BIDDING

# SECTION 055213
# PIPE AND TUBE RAILINGS

## PART 1 GENERAL

1.01 SECTION INCLUDES

A. Wall mounted handrails.

B. Stair railings and guardrails.

C. Free-standing railings.

1.02 RELATED REQUIREMENTS

A. Section 055100 - Metal Stairs: Handrails other than those specified in this section.

B. Section 057300 - Decorative Metal Railings

C. Section 092116 - Gypsum Board Assemblies: Placement of backing plates in stud wall construction.

D. Section 09 9000 - Paints and Coatings

E. Division 26: LED Lighting integral to handrails.

1.03 REFERENCE STANDARDS

A. ADA Standards - Americans with Disabilities Act (ADA) Standards for Accessible Design; 2010.

B. AISC 201 - AISC Certification Program for Structural Steel Fabricators, Standard for Steel Building Structures; 2006.

C. ASTM A53/A53M - Standard Specification for Pipe, Steel, Black and Hot-Dipped, Zinc-Coated, Welded and Seamless; 2012.

D. ASTM A501/A501M - Standard Specification for Hot-Formed Welded and Seamless Carbon Steel Structural Tubing; 2014.

E. ASTM E935 - Standard Test Methods for Performance of Permanent Metal Railing Systems and Rails for Buildings; 2013.

F. ASTM E985 - Standard Specification for Permanent Metal Railing Systems and Rails for Buildings; 2000 (Reapproved 2006).

G. SSPC-Paint 15 - Steel Joist Shop Primer/Metal Building Primer; 1999 (Ed. 2004).

1.04 SUBMITTALS

A. See Section 013000 - Administrative Requirements, for submittal procedures.

B. Shop Drawings: Indicate profiles, sizes, connection attachments, anchorage, size and type of fasteners, and accessories.

1.05 QUALITY ASSURANCE

A. Structural Designer Qualifications: Professional Structural Engineer experienced in design of this work and licensed in Delaware, or personnel under direct supervision of such an engineer.

B. Welder Qualifications: Show certification of welders employed on the Work, verifying AWS qualification within the previous 12 months.

C. Fabricator Qualifications:

1. A qualified steel fabricator that is certified by the American Institute for Steel Construction (AISC) under AISC 201.

NOT FOR BIDDING

2. A company specializing in manufacturing products specified in this section, with not less than ten years of documented experience.

**PART 2 PRODUCTS**

2.01 RAILINGS - GENERAL REQUIREMENTS

A. Design, fabricate, and test railing assemblies in accordance with the most stringent requirements of applicable local code.

B. Distributed Loads: Design railing assembly, wall rails, and attachments to resist distributed force of 75 pounds per linear foot applied to the top of the assembly and in any direction, without damage or permanent set.

C. Concentrated Loads: Design railing assembly, wall rails, and attachments to resist a concentrated force of 200 pounds applied at any point on the top of the assembly and in any direction, without damage or permanent set.

D. Allow for expansion and contraction of members and building movement without damage to connections or members.

E. Dimensions: See drawings for configurations and heights.

F. Provide anchors and other components as required to attach to structure, made of same materials as railing components unless otherwise indicated; where exposed fasteners are unavoidable provide flush countersunk fasteners.

G. Provide welding fittings to join lengths, seal open ends, and conceal exposed mounting bolts and nuts, including but not limited to elbows, T-shapes, splice connectors, flanges, escutcheons, and wall brackets.

2.02 STEEL RAILING SYSTEM (TYPICAL, U.O.N.)

A. Exterior railings and guards:
   1. Stainless steel.

B. Interior railings and guards:
   1. Painted steel, with stainless steel handrails and top guard.
   2. Wall and Post-Mounted Handrails: Stainless Steel, Round pipe unless otherwise indicated.
      a. Outside Diameter: 1-1/4 inch, minimum, to 1-1/2 inches, maximum.
   3. Guards:
      a. Top Rails: Stainless steel, round pipe unless otherwise indicated.
         1) Outside Diameter: 1-1/2 inch, minimum, to 2 inches, maximum.
      b. Infill at Picket Railings: Vertical pickets.
         1) Horizontal Spacing: Maximum 4 inches on center.
         2) Material: Solid steel bar.
         3) Shape: Square.
         4) Size: 1/2 inch square.
         5) Top Mounting: Welded to steel channel at underside of top rail.
         6) Bottom Mounting: Welded to 1-1/2" square bottom rail.
      c. End and Intermediate Posts: Square tube.
         1) Horizontal Spacing: As required to meet design loads.
         2) Mounting: Welded to top surface of stringer.

C. Steel Tube: ASTM A501/A501M hot-formed structural tubing.

D. Steel Pipe: ASTM A53/A53M, Grade B Schedule 80, black finish.

NOT FOR BIDDING

E. Welding Fittings: Factory- or shop-welded from matching pipe or tube; seams continuously welded; joints and seams ground smooth.

F. Exposed Fasteners: No exposed bolts or screws.

G. Straight Splice Connectors: Steel concealed spigots.

H. Shop and Touch-Up Primer: SSPC-Paint 15, complying with VOC limitations of authorities having jurisdiction.

2.03 FABRICATION

A. Accurately form components to suit specific project conditions and for proper connection to building structure.

B. Fit and shop assemble components in largest practical sizes for delivery to site.

C. Fabricate components with joints tightly fitted and secured. Provide spigots and sleeves to accommodate site assembly and installation.

D. Welded Joints:

1. Exterior Components: Continuously seal joined pieces by continuous welds. Drill condensate drainage holes at bottom of members at locations that will not encourage water intrusion.
2. Interior Components: Continuously seal joined pieces by continuous welds.
3. Grind exposed joints flush and smooth with adjacent finish surface. Make exposed joints butt tight, flush, and hairline. Ease exposed edges to small uniform radius.

**PART 3 EXECUTION**

3.01 EXAMINATION

A. Verify that field conditions are acceptable and are ready to receive work.

3.02 PREPARATION

A. Clean and strip primed steel items to bare metal where site welding is required.

B. Supply items required to be cast into concrete or embedded in masonry with setting templates, for installation as work of other sections.

3.03 INSTALLATION

A. Install in accordance with manufacturer's instructions.

B. Install components plumb and level, accurately fitted, free from distortion or defects, with tight joints.

C. Install railings in compliance with ADA Standards for accessible design at applicable locations.

D. Anchor railings securely to structure.

E. Field weld weld anchors as indicated on shop drawings. Touch-up welds with primer. Grind welds smooth.

F. Conceal anchor bolts and screws whenever possible. Where not concealed, use flush countersunk fastenings.

3.04 TOLERANCES

A. Maximum Variation From Plumb: 1/4 inch per floor level, non-cumulative.

B. Maximum Offset From True Alignment: 1/4 inch.

NOT FOR BIDDING

C. Maximum Out-of-Position: 1/4 inch.

**END OF SECTION**

NOT FOR BIDDING

# SECTION 057300
# DECORATIVE METAL RAILINGS

## PART 1 GENERAL

1.01 SECTION INCLUDES

A. Stainless steel decorative railings and guards, with infill panels.

1.02 RELATED REQUIREMENTS

A. Section 033000 - Cast-in-Place Concrete: Placement of anchors in concrete.

B. Section 055100 - Metal Stairs: Handrails other than those specified in this section.

C. Section 055213 - Pipe and Tube Railings

D. Section 092116 - Gypsum Board Assemblies: Placement of backing plates in stud wall construction.

1.03 ADMINISTRATIVE REQUIREMENTS

A. Preinstallation Meeting: Conduct a preinstallation meeting one week prior to the start of the work of this section; require attendance by all affected installers.

1.04 SUBMITTALS

A. See Section 013000 - Administrative Requirements, for submittal procedures.

B. Product data: Manufacturer's product lines of railings assembled from standard components.

C. Shop drawings: Indicate profiles, sizes, connections, attachments, anchorage, size and type of fasteners, and accessories.

D. Samples for verification.
   1. Sections of each distinctly different linear railing member, including handrails, top rails, posts, and balusters.
   2. Fittings and brackets.
   3. Assembled Samples of railing systems, made from full-size components, including top rail, post, handrail, and infill. Show method of finishing members at intersections. Samples need not be full height.

E. Design Calculations Submittal: For installed products indicated to comply with performance requirements and design criteria, including analysis data signed and sealed by the qualified professional engineer responsible for their preparation.

1.05 QUALITY ASSURANCE

A. Designer Qualifications: Perform design under direct supervision of a Professional Engineer experienced in design of this type of work and licensed in Delaware.

B. Manufacturer Qualifications: Company specializing in manufacturing products specified in this section, with at least three years of documented experience.

C. Installer Requirements: Installed by manufacturer or manufacturer certified installer.

D. Welding Qualifications: Qualify procedures and personnel according to the following:
   1. AWS D1.1/D1.1M, "Structural Welding Code - Steel."
   2. AWS D1.6/D1.6M, "Structural Welding Code - Stainless Steel."

1.06 MOCK-UP

A. Mockups: Build mockups to verify selections made under Sample submittals, to demonstrate aesthetic effects, and to set quality standards for fabrication and installation.

B. Build mockups as one section of rail.

NOT FOR BIDDING

C. Build mockups for each form and finish of railing consisting of two posts, top rail, infill area, and anchorage system components that are full height and are not less than 24 inches (600 mm) in length.

D. Subject to compliance with requirements, approved mockups may become part of the completed Work if undisturbed at time of Substantial Completion.

1.07 FIELD CONDITIONS

A. Field Measurements: Verify actual locations of walls and other construction contiguous with railings by field measurements before fabrication and indicate measurements on Shop Drawings.

**PART 2 PRODUCTS**

2.01 RAILINGS - GENERAL REQUIREMENTS

A. Design, fabricate, and test railing assemblies in accordance with the most stringent requirements of applicable local code.

B. Distributed Loads: Design railing assembly, wall rails, and attachments to resist distributed force of 75 pounds per linear foot applied to the top of the assembly and in any direction, without damage or permanent set.

C. Concentrated Loads: Design railing assembly, wall rails, and attachments to resist a concentrated force of 200 pounds applied at any point on the top of the assembly and in any direction, without damage or permanent set.

D. Allow for expansion and contraction of members and building movement without damage to connections or members.

2.02 MANUFACTURERS

A. Viva Railings. (Basis of Design): https://vivarailings.com
   1. Basis of Design Railing System: Viva Railings CUBE perforated metal railing system.

B. Equivalent Products of the following manufacturers are also approved:
   1. Julius Blum & Co.
   2. Morse Industries.

C. Substitutions: See Section 016000.

2.03 RAILING DESIGN

A. Description: Railing system comprised of 2”x 2” square posts, terminating into monolithic pyramid top cap to provide continuous clean lines throughout the components. Railing in-fill between the posts is mounted via fixed point holders for mounting stainless steel perforated metal infill.

B. Posts
   1. Size: 2" x 2" square.
   2. Material: Type 304 stainless steel.
   3. Finish: #6 satin.

C. Infill
   1. Size: as indicated on drawings.
   2. Material: Type 304 stainless steel.
   3. Finish: #6 satin.
   4. Perforation pattern: 10mm squares on 13mm centers, 56% openness. Viva pattern PMSQ-1013.
   5. Frame: 1" wide.

NOT FOR BIDDING

D. Top rail:
   1. Size: 2" diameter.
   2. Material: Type 304 stainless steel.
   3. Finish: #6 satin.

E. Handrail:
   1. Size: 1.5" diameter.
   2. Material: Type 304 stainless steel.
   3. Finish: #6 satin.

2.04 METALS, GENERAL

A. Metal Surfaces, General: Provide materials with smooth surfaces, without seam marks, roller marks, rolled trade names, stains, discolorations, or blemishes.

B. Brackets, Flanges, and Anchors: Same metal and finish as supported rails unless otherwise indicated.
   1. Provide cast-stainless steel wall brackets with flange tapped for concealed anchorage with vertical and horizontal adjustment capability.

2.05 STAINLESS STEEL

A. Tubing: ASTM A 554, Grade MT 304.

B. Pipe: ASTM A 312/A 312M, Grade TP 304.

C. Castings: ASTM A 743/A 743M, Grade CF 8 or CF 20.

D. Sheet, Strip, Plate, and Flat Bar: ASTM A 666, Type 304.
   1. Bars and Shapes: ASTM A 276, Type 304.

E. Perforated Metal: Stainless-steel sheet, ASTM A 240/A 240M or ASTM A 666, Type 304.

2.06 FASTENERS

A. Fastener Materials: Unless otherwise indicated, provide the following:
   1. Stainless-Steel Components: Type 304 stainless-steel fasteners.
   2. Uncoated Steel Components: Plated-steel fasteners complying with ASTM B 633, Class Fe/Zn 25 for electrodeposited zinc coating where concealed; Type 304 stainless-steel fasteners where exposed.
   3. Galvanized-Steel Components: Plated-steel fasteners complying with ASTM B 633, Class Fe/Zn 25 for electrodeposited zinc coating.
   4. Dissimilar Metals: Type 304 stainless-steel fasteners.

B. Fasteners for Anchoring to Other Construction: Select fasteners of type, grade, and class required to produce connections suitable for anchoring railings to other types of construction indicated, and capable of withstanding design loads.
   1. Provide concealed fasteners for interconnecting railing components and for attaching railings to other work unless otherwise indicated.

C. Post-Installed Anchors: Fastener systems with working capacity greater than or equal to the design load, according to an evaluation report acceptable to authorities having jurisdiction, based on ICC-ES AC193.

2.07 MISCELLANEOUS MATERIALS

A. Welding Rods and Bare Electrodes: Select according to AWS specifications for metal alloy welded.

B. Bituminous Paint: Cold-applied asphalt emulsion complying with ASTM D 1187/D 1187M.

NOT FOR BIDDING

C. Nonshrink, Nonmetallic Grout: Factory-packaged, nonstaining, noncorrosive, nongaseous grout complying with ASTM C 1107/C 1107M. Provide grout specifically recommended by manufacturer for interior and exterior applications.

D. Anchoring Cement: Factory-packaged, nonshrink, nonstaining, hydraulic-controlled expansion cement formulation for mixing with water at Project site to create pourable anchoring, patching, and grouting compound.

2.08 FABRICATION

A. General: Fabricate railings to comply with requirements indicated for design, dimensions, member sizes and spacing, details, finish, and anchorage, but not less than that required to support structural loads.

B. Assemble railings in the shop to greatest extent possible to minimize field splicing and assembly. Disassemble units only as necessary for shipping and handling limitations. Clearly mark units for reassembly and coordinated installation. Use connections that maintain structural value of joined pieces.

C. Cut, drill, and punch metals cleanly and accurately. Remove burrs and ease edges to a radius of approximately 1/32 inch (1 mm) unless otherwise indicated. Remove sharp or rough areas on exposed surfaces.

D. Form work true to line and level with accurate angles and surfaces.

E. Cut, reinforce, drill, and tap as indicated to receive finish hardware, screws, and similar items.

F. Connections: Fabricate railings with welded connections unless otherwise indicated.

G. Welded Connections: Cope components at connections to provide close fit, or use fittings designed for this purpose. Weld all around at connections, including at fittings.
   1. Use materials and methods that minimize distortion and develop strength and corrosion resistance of base metals.
   2. Obtain fusion without undercut or overlap.
   3. Remove flux immediately.
   4. At exposed connections, finish exposed welds to comply with NOMMA's "Voluntary Joint Finish Standards" for Type 1 welds; no evidence of a welded joint.

H. Form changes in direction as follows:
   1. By flush bends.

I. Close exposed ends of hollow railing members with prefabricated end fittings.

J. Provide wall returns at ends of wall-mounted handrails unless otherwise indicated.

K. Brackets, Flanges, Fittings, and Anchors: Provide wall brackets, flanges, miscellaneous fittings, and anchors to interconnect railing members to other work unless otherwise indicated.

L. Provide inserts and other anchorage devices for connecting railings to concrete or masonry work. Fabricate anchorage devices capable of withstanding loads imposed by railings. Coordinate anchorage devices with supporting structure.

M. For railing posts set in concrete, provide stainless-steel sleeves not less than 6 inches (150 mm) long with inside dimensions not less than 1/2 inch (13 mm) greater than outside dimensions of post, with metal plate forming bottom closure.

N. Perforated-Metal Infill Panels: Fabricate infill panels from perforated metal made from stainless steel crimped into 1-by-1/2-by-1/8-inch (25-by-13-by-3-mm) welded stainless steel channel frames.

NOT FOR BIDDING

1. Edge panels with C-shaped channels made from metal sheet, of same metal as perforated metal and not less than 0.043 inch (1.1 mm) thick.
2. Orient perforated metal with pattern parallel to ground.

2.09 GENERAL FINISH REQUIREMENTS

A. Comply with NAAMM's "Metal Finishes Manual for Architectural and Metal Products" recommendations for applying and designating finishes.

B. Protect mechanical finishes on exposed surfaces from damage by applying a strippable, temporary protective covering before shipment.

2.10 STAINLESS STEEL FINISHES

A. Surface Preparation: Remove tool and die marks and stretch lines, or blend into finish.

B. Polished Finishes: Grind and polish surfaces to produce uniform finish, free of cross scratches.

C. Dull Satin Finish: No. 6.

D. When polishing is completed, rinse surfaces. Remove embedded foreign matter and leave surfaces chemically clean.

**PART 3 EXECUTION**

3.01 EXAMINATION

A. Installation Tolerances: Structural steel and concrete slab to be within 1/8 inch (3 mm) in 10 ft (3.048 m) horizontally and 1/8 inch (3 mm) vertically. Correct conditions out-of-tolerance to meet railing manufacturer's requirements.

3.02 INSTALLATION, GENERAL

A. Fit exposed connections together to form tight, hairline joints.

B. Perform cutting, drilling, and fitting required for installing railings. Set railings accurately in location, alignment, and elevation, measured from established lines and levels and free of rack.
1. Do not weld, cut, or abrade surfaces of railing components that have been coated or finished after fabrication and that are intended for field connection by mechanical or other means without further cutting or fitting.
2. Set posts plumb within a tolerance of 1/16 inch in 3 feet (2 mm in 1 m).
3. Align rails so variations from level for horizontal members and variations from parallel with rake of steps and ramps for sloping members do not exceed 1/4 inch in 12 feet (5 mm in 3 m).

C. Control of Corrosion: Prevent galvanic action and other forms of corrosion by insulating metals and other materials from direct contact with incompatible materials.
1. Coat concealed surfaces of aluminum that will be in contact with grout, concrete, masonry, wood, or dissimilar metals, with a heavy coat of bituminous paint.

D. Adjust railings before anchoring to ensure matching alignment at abutting joints.

E. Fastening to In-Place Construction: Use anchorage devices and fasteners where necessary for securing railings and for properly transferring loads to in-place construction.

3.03 RAILING CONNECTIONS

A. Welded Connections: Use fully welded joints for permanently connecting railing components. Comply with requirements for welded connections in "Fabrication" Article whether welding is performed in the shop or in the field.

B. Expansion Joints: Install expansion joints at locations indicated but not farther apart than required to accommodate thermal movement. Provide slip-joint internal sleeve extending 2

NOT FOR BIDDING

inches (50 mm) beyond joint on either side, fasten internal sleeve securely to one side, and locate joint within 6 inches (150 mm) of post.

3.04 ANCHORING POSTS

A. Form or core-drill holes in accordance with engineering requirements for installing posts in concrete. Clean holes of loose material, insert posts, and fill annular space between post and concrete with nonshrink, nonmetallic grout, mixed and placed to comply with anchoring material manufacturer's written instructions.

B. Cover anchorage joint with flange of same metal as post, attached to post with set screws.

C. Anchor posts to metal surfaces with flanges, angle type, or floor type as required by conditions, connected to posts and to metal supporting members as follows:
   1. For stainless-steel railings, weld flanges to posts and bolt to metal-supporting surfaces.

3.05 ATTACHING RAILINGS

A. Anchor railing ends to concrete and masonry with brackets on underside of rails connected to railing ends and anchored to wall construction with anchors and bolts.

B. Anchor railing ends to metal surfaces with flanges bolted to metal surfaces and connected to railing ends using nonwelded connections.

C. Attach handrails to walls with wall brackets. Provide brackets with 2-1/4-inch (57-mm) clearance from inside face of handrail and finished wall surface. Locate brackets as indicated or, if not indicated, at spacing required to support structural loads.
   1. Locate brackets as indicated or, if not indicated, at spacing required to support structural loads.

D. Secure wall brackets and railing end flanges to building construction as follows:
   1. For concrete and solid masonry anchorage, use drilled-in expansion shields and hanger or lag bolts.
   2. For hollow masonry anchorage, use toggle bolts.
   3. For steel-framed partitions, use hanger or lag bolts set into fire-retardant-treated] wood backing between studs. Coordinate with stud installation to locate backing members.

3.06 CLEANING

A. Clean stainless steel by washing thoroughly with clean water and soap, rinsing with clean water, and wiping dry.

3.07 PROTECTION

A. Protect finishes of railings from damage during construction period with temporary protective covering approved by railing manufacturer. Remove protective coverings at time of Substantial Completion.

B. Restore finishes damaged during installation and construction period so no evidence remains of correction work. Return items that cannot be refinished in the field to the shop; make required alterations and refinish entire unit, or provide new units.

**END OF SECTION**

NOT FOR BIDDING

# SECTION 061000
# ROUGH CARPENTRY

## PART 1 GENERAL

1.01 SECTION INCLUDES

A. Roofing nailers.

B. Preservative treated wood materials.

C. Fire retardant treated wood materials.

D. Communications and electrical room mounting boards.

E. Concealed wood blocking, nailers, and supports.

1.02 RELATED REQUIREMENTS

A. Section 033000 - Cast-in-Place Concrete: Setting anchors in concrete.

B. Section 061213: Concrete Panel Subfloor System

C. Section 092116 - Gypsum Board Assemblies: Gypsum-based sheathing.

1.03 REFERENCE STANDARDS

A. ASTM A153/A153M - Standard Specification for Zinc Coating (Hot-Dip) on Iron and Steel Hardware; 2016a.

B. ASTM D2898 - Standard Test Methods for Accelerated Weathering of Fire-Retardant-Treated Wood for Fire Testing; 2010.

C. ASTM E84 - Standard Test Method for Surface Burning Characteristics of Building Materials; 2016.

D. AWPA U1 - Use Category System: User Specification for Treated Wood; 2012.

E. PS 1 - Structural Plywood; 2009.

F. PS 20 - American Softwood Lumber Standard; 2010.

1.04 SUBMITTALS

A. See Section 013000 - Administrative Requirements, for submittal procedures.

B. Product Data: Provide technical data on wood preservative materials and rough carpentry products.

C. Manufacturer's Certificate: Certify that wood products supplied for rough carpentry meet or exceed specified requirements.

D. Warranty: Submit manufacturer warranty and ensure that forms have been completed in Owner's name and registered with manufacturer.

1.05 DELIVERY, STORAGE, AND HANDLING

A. General: Cover wood products to protect against moisture. Support stacked products to prevent deformation and to allow air circulation.

B. Fire Retardant Treated Wood: Prevent exposure to precipitation during shipping, storage, or installation.

1.06 WARRANTY

A. See Section 017800 - Closeout Submittals, for additional warranty requirements.

NOT FOR BIDDING

**PART 2 PRODUCTS**

2.01 GENERAL REQUIREMENTS

A. Dimension Lumber: Comply with PS 20 and requirements of specified grading agencies.
   1. If no species is specified, provide any species graded by the agency specified; if no grading agency is specified, provide lumber graded by any grading agency meeting the specified requirements.
   2. Grading Agency: Any grading agency whose rules are approved by the Board of Review, American Lumber Standard Committee (www.alsc.org) and who provides grading service for the species and grade specified; provide lumber stamped with grade mark unless otherwise indicated.

B. Lumber fabricated from old growth timber is not permitted.

2.02 DIMENSION LUMBER FOR CONCEALED APPLICATIONS

A. Sizes: Nominal sizes as indicated on drawings, S4S.

B. Moisture Content: Kiln-dry or MC15.

C. Miscellaneous Framing, Blocking, Nailers, Grounds, and Furring:
   1. Lumber: S4S, No. 2 or Standard Grade.
   2. Boards: Standard or No. 3.

2.03 CONSTRUCTION PANELS

A. Communications and Electrical Room Mounting Boards: PS 1 A-D plywood, or medium density fiberboard; 3/4 inch thick; flame spread index of 25 or less, smoke developed index of 450 or less, when tested in accordance with ASTM E84.

B. Other Applications:
   1. Plywood Concealed From View But Located Within Exterior Enclosure: PS 1, C-C Plugged or better, Exterior grade.
   2. Other Locations: PS 1, C-D Plugged or better.

2.04 ACCESSORIES

A. Fasteners and Anchors:
   1. Metal and Finish: Hot-dipped galvanized steel complying with ASTM A153/A153M for high humidity and preservative-treated wood locations, unfinished steel elsewhere.
   2. Drywall Screws: Bugle head, hardened steel, power driven type, length three times thickness of sheathing.
   3. Anchors: Toggle bolt type for anchorage to hollow masonry.

2.05 FACTORY WOOD TREATMENT

A. Treated Lumber and Plywood: Comply with requirements of AWPA U1 - Use Category System for wood treatments determined by use categories, expected service conditions, and specific applications.
   1. Fire-Retardant Treated Wood: Mark each piece of wood with producer's stamp indicating compliance with specified requirements.
   2. Preservative-Treated Wood: Provide lumber and plywood marked or stamped by an ALSC-accredited testing agency, certifying level and type of treatment in accordance with AWPA standards.

B. Fire Retardant Treatment:
   1. Manufacturers:
      a. Arch Wood Protection, Inc: www.wolmanizedwood.com.

NOT FOR BIDDING

b. Hoover Treated Wood Products, Inc: www.frtw.com.
c. Koppers, Inc: www.koppers.com.
d. Substitutions: See Section 016000 - Product Requirements.

2. Exterior Type: AWPA U1, Category UCFB, Commodity Specification H, chemically treated and pressure impregnated; capable of providing a maximum flame spread index of 25 when tested in accordance with ASTM E84, with no evidence of significant combustion when test is extended for an additional 20 minutes both before and after accelerated weathering test performed in accordance with ASTM D2898.
   a. Kiln dry wood after treatment to a maximum moisture content of 19 percent for lumber and 15 percent for plywood.
   b. Treat other rough carpentry items as indicated.
   c. Do not use treated wood in direct contact with the ground.
3. Interior Type A: AWPA U1, Use Category UCFA, Commodity Specification H, low temperature (low hygroscopic) type, chemically treated and pressure impregnated; capable of providing a maximum flame spread index of 25 when tested in accordance with ASTM E84, with no evidence of significant combustion when test is extended for an additional 20 minutes.
   a. Kiln dry wood after treatment to a maximum moisture content of 19 percent for lumber and 15 percent for plywood.
   b. Treat rough carpentry items as indicated.
   c. Do not use treated wood in applications exposed to weather or where the wood may become wet.

C. Preservative Treatment:
1. Manufacturers:
   a. Arch Wood Protection, Inc: www.archwoolmanizedwood.com.
   b. Koppers Performance Chemicals, Inc: www.koppersperformancechemicals.com.
   c. Substitutions: See Section 016000 - Product Requirements.
2. Preservative Pressure Treatment of Lumber Above Grade: AWPA U1, Use Category UC3B, Commodity Specification A using waterborne preservative.
   a. Kiln dry lumber after treatment to maximum moisture content of 19 percent.
   b. Treat lumber in contact with flashing or waterproofing.
   c. Treat lumber in contact with masonry or concrete.
   d. Treat lumber less than 18 inches above grade.
   e. Treat lumber in other locations as indicated.
   f. Treat lumber used for wood blocking within cavity wall construction..
3. Preservative Pressure Treatment of Plywood Above Grade: AWPA U1, Use Category UC3 and UC3B, Commodity Specification F using waterborne preservative.
   Kiln dry plywood after treatment to maximum moisture content of 19 percent.
   b. Treat plywood in contact with flashing or waterproofing.
   c. Treat plywood in contact with masonry or concrete.
   d. Treat plywood less than 18 inches above grade.
   e. Treat plywood in other locations as indicated.
   f. Treat plywood used for wood blocking within cavity wall construction..

**PART 3 EXECUTION**

3.01 INSTALLATION - GENERAL

A. Select material sizes to minimize waste.

NOT FOR BIDDING

B. Reuse scrap to the greatest extent possible; clearly separate scrap for use on site as accessory components, including: shims, bracing, and blocking.

C. Where treated wood is used on interior, provide temporary ventilation during and immediately after installation sufficient to remove indoor air contaminants.

3.02 BLOCKING, NAILERS, AND SUPPORTS

A. Provide framing and blocking members as indicated or as required to support finishes, fixtures, specialty items, and trim.

B. In framed assemblies that have concealed spaces, provide solid wood fireblocking as required by applicable local code, to close concealed draft openings between floors and between top story and roof/attic space; other material acceptable to code authorities may be used in lieu of solid wood blocking.

C. In metal stud walls, provide continuous blocking around door and window openings for anchorage of frames, securely attached to stud framing.

D. In walls, provide blocking attached to studs as backing and support for wall-mounted items, unless item can be securely fastened to two or more studs or other method of support is explicitly indicated.

E. Where ceiling-mounting is indicated, provide blocking and supplementary supports above ceiling, unless other method of support is explicitly indicated.

F. Provide the following specific non-structural framing and blocking:
   1. Cabinets and shelf supports.
   2. Wall brackets.
   3. Handrails.
   4. Grab bars.
   5. Towel and bath accessories.
   6. Wall-mounted door stops.
   7. Chalkboards and marker boards.
   8. Wall paneling and trim.
   9. Joints of rigid wall coverings that occur between studs.
   10. Smartboard and monitor mounts.

3.03 ROOF-RELATED CARPENTRY

A. Coordinate installation of roofing carpentry with deck construction, framing of roof openings, and roofing assembly installation.

B. Provide wood curb at all roof openings except where specifically indicated otherwise. Form corners by alternating lapping side members.

3.04 INSTALLATION OF CONSTRUCTION PANELS

A. Communications and Electrical Room Mounting Boards: Secure with screws to studs with edges over firm bearing; space fasteners at maximum 24 inches on center on all edges and into studs in field of board.
   1. At fire-rated walls, install board over wall board indicated as part of the fire-rated assembly.
   2. Where boards are indicated as full floor-to-ceiling height, install with long edge of board parallel to studs.
   3. Install adjacent boards without gaps.
   4. Size: 48 by 96 inches, installed horizontally at ceiling height.

NOT FOR BIDDING

3.05 SITE APPLIED WOOD TREATMENT

A. Apply preservative treatment compatible with factory applied treatment at site-sawn cuts, complying with manufacturer's instructions.

B. Allow preservative to dry prior to erecting members.

3.06 CLEANING

A. Do not leave any wood, shavings, sawdust, etc. on the ground or buried in fill.

B. Prevent sawdust and wood shavings from entering the storm drainage system.

**END OF SECTION**

NOT FOR BIDDING

# SECTION 061213
# STRUCTURAL PANEL CONCRETE SUBFLOOR

## PART 1 - GENERAL

1.01 SECTION INCLUDES

A. Structural Panel Concrete Underlayment .

B. Fasteners

1.02 RELATED WORK

A. Section 054000: Cold-Formed Metal Framing

B. Section 061000: Wood blocking

C. Section 092116: Cementitious underlayment at floors.

1.03 REFERENCE STANDARDS

A. ICC-ES AC318 – Acceptance Criteria for Structural Cementitious Floor and Roof Sheathing Panels

B. ICC-ES AC319 – Acceptance Criteria for Horizontal Diaphragms Consisting of Structural Cementitious Floor Sheathing Panels Attached to Cold-Formed Steel Framing

C. ASTM E84 – Standard Test Method for Surface Burning Characteristics of Building Materials

D. ASTM E119 – Standard Test Method for Fire Tests of Building Construction and Materials

E. ASTM E136 – Standard Test Method for Behavior of Materials in a Vertical Tube Furnace at 750° C

1.04 SUBMITTALS

A. See Section 013000 - Administrative Requirements, for submittal procedures.

B. Product Data: Provide technical data on structural concrete panel subfloor products and accessories.

C. Manufacturer's Certificate: Certify that products meet or exceed specified requirements.

1.05 SYSTEM REQUIREMENTS

A. Performance Requirements: Fabricate and install systems as indicated:

1. Fasteners:

a. Follow the selected fastener layout for Screw Patterns, for the design Diaphragm Loads as described in the current Progressive Engineering, Inc.'s Evaluation Report PER-13067.

2. Panel Layout:

a. Follow the Structural Panel Concrete Subfloor application described in the current Progressive Engineering, Inc.'s Evaluation Report PER-13067.

B. Noncombustible Ratings: Where noncombustible assemblies are required, provide materials and application procedures identical to those tested according to ASTM E136, "Standard Test Method for Behavior of Materials in a Vertical Tube Furnace at 750 °C."

1.06 DELIVERY, STORAGE AND HANDLING

A. Delivery:

1. Deliver material to site promptly without undue exposure to weather.

2. Deliver in manufacturer's unopened containers, pallets, or panels fully identified with name, brand, type and grade.

B. Storage:

NOT FOR BIDDING

1. Store above ground in dry, ventilated space.
2. Protect materials from soiling, exposure, and damage.

C. PROJECT CONDITIONS
1. Environmental Requirements:
a. When mechanically fastened, do not install Structural Panel Concrete Subfloor when ambient or conditioned temperature is below 0 °F (-18 °C).
b. Prior to the application of finished flooring, Structural Panel Concrete Subfloor must be conditioned at the same temperature as required for the finished flooring for at least 48 hours.

**PART 2 – PRODUCTS**

2.01 PRODUCTS AND MANUFACTURERS

A. Structural Concrete Panel: Listed products establish standard of quality and are manufactured by United States Gypsum Company (USG): https://www.usg.com.
1. Substitutions: See Section 016000.

B. MATERIALS
1. Structural Concrete Panel:
a. USG Structural Panel Concrete Subfloor, a non combustible structural subfloor panel manufactured in accordance with Acceptance Criteria AC318.
1) Panel Dimensions:
(a) Thickness: 3/4" (19 mm)
(b) Width: 4' (1220 mm)
(c) Lengths: 8' (2440 mm)
(d) Long Edges: Tongue and Groove
2) Panel Properties:
(a) Density: 75 lb/ft3 (1200 kg/m3) tested in accordance with ASTM C1185
(b) Weight: 5.0 lbs/ft2 (24.4 kg/m2) tested in accordance with ASTM D1037 at a thickness of 3/4 inch (19 mm)
(c) Noncombustibility: Pass tested in accordance to ASTM E136
(d) Surface Burning Characteristics: 0 – Flame Spread / 0 Smoke Developed tested in accordance with ASTM E84
(e) Mold Resistance: 10 tested in accordance with ASTM D3273; 0 tested in accordance with G21.
2. Structural Panel Concrete Subfloor Recommended Fasteners:
a. In accordance with PER-13067 (Subfloor) and PER-14076 (Roof Deck), PER-15092 (Foundation Wall), and ESR-1792 (Subfloor).
b. Use only fasteners recommended by manufacturer.
c. Install using the recommended spacing and distance from the Ends (square cut) and Edges (tongue & groove) of the panel.
d. Any length of recommended fasteners may be used but do not use a larger size fastener unless specified by the structural engineer.
3. Floor Coverings and Underlayment:
a. Follow floor covering manufacturers' installation procedures.

**PART 3 – EXECUTION**

3.01 EXAMINATION

A. Examine substrates, adjoining construction and conditions under which Work is to be installed. Do not proceed with Work until unsatisfactory conditions are corrected.

NOT FOR BIDDING

B. Steel framing to receive the Structural Panel Concrete Subfloor shall be structurally sound, free from bows, twists or other malformations and in general compliance with local building code requirements. Damaged framing shall be replaced before installation of USG Structural Panel Concrete Subfloor.

3.02 GENERAL INSTALLATION REQUIREMENTS

A. Cold-Formed Steel Framing:
   1. Refer to Section 054000 for general installation requirements.
   2. The attachment flange or bearing edge for cold-formed steel must be a minimum 1-5/8" (41 mm) wide, 2" preferred, with at least 3/4" (19 mm) of the panel bearing on the supporting flange.
   3. All blocking or bridging must be installed prior to the installation of Structural Panel Concrete Subfloor.

3.03 STRUCTURAL PANEL CONCRETE SUBFLOOR INSTALLATION:

A. Structural Panel Concrete Subfloor shall be installed with the long edges (tongue & groove) perpendicular to the framing.

B. Structural Panel Concrete Subfloor shall be mechanically fastened to framing members.

C. Plan panel layout so the first and last panel row width is a minimum of 24" (610 mm) wide. In the case where the row width is less than 24" (610 mm) wide, panels shall be blocked on all edges by framing (strapping is not sufficient).

D. Ensure that all supporting members are free of debris before placing panels. Place the cut edge or tongue along the rim joist. Place each panel across three or more supports [minimum two-span condition]. Less than full length panels at the end of a row may span a single framing opening. Cut panels to length as needed to ensure that the butt end of the panel is centered on the framing member. Install panels in a direction that ensures that the butt end falls over the open side of the joist.

E. Fasten Structural Panel Concrete Subfloor in accordance with manufacturer requirements.

F. Clean grooves with a stiff bristle brush to dislodge trapped debris. Do not gap the panels.

G. Install rows in a running bond pattern so that end joints fall over the center of the framing members and are staggered by at least two supports from where the end joints fall in the adjacent rows. Less than full length panels at the end of a row may be staggered by a single support.

H. Penetrations in the panels should be made before installing the panel whenever possible. Support the ends and edges of any penetrations with framing if they are greater than 6" (153 mm) in any direction.

3.04 PROTECTION

A. Protect panels by installing flooring underlayment immediately following installation, or by other means as directed by Construction Manager.

**END OF SECTION**

NOT FOR BIDDING

# SECTION 062000
# FINISH CARPENTRY

## PART 1 GENERAL

1.01 SECTION INCLUDES

A. Finish carpentry items.
   1. Custom plastic laminate and solid surfacing reception and circulation desks.
   2. Plastic laminate veneer paneling.
   3. Classroom hooks and ledger boards
   4. Standing and running wood trim, stained finish.
   5. Hang doors, install hardware.

B. Hardware and attachment accessories.

1.02 RELATED REQUIREMENTS

A. Section 061000 - Rough Carpentry: Support framing, grounds, and concealed blocking.

B. Section 123600 - Countertops, Backsplashes and Window Stools: Solid Surface material.

1.03 REFERENCE STANDARDS

A. ANSI A208.1 - American National Standard for Particleboard; 2009.

B. ASTM E84 - Standard Test Method for Surface Burning Characteristics of Building Materials; 2016.

C. AWI (QCP) - Quality Certification Program; current edition at www.awiqcp.org.

D. AWI/AWMAC/WI (AWS) - Architectural Woodwork Standards; 2014.

E. AWMAC/WI (NAAWS) - North American Architectural Woodwork Standards, U.S. Version 3.0; 2016.

F. AWPA U1 - Use Category System: User Specification for Treated Wood; 2012.

G. BHMA A156.9 - American National Standard for Cabinet Hardware; 2015.

H. HPVA HP-1 - American National Standard for Hardwood and Decorative Plywood; 2009.

I. NEMA LD 3 - High Pressure Decorative Laminates; 2005.

1.04 ADMINISTRATIVE REQUIREMENTS

A. Coordinate the work with plumbing rough-in, electrical rough-in, and installation of associated and adjacent components.

1.05 SUBMITTALS

A. Product Data:
   1. Provide manufacturer's product data, storage and handling instructions for factory-fabricated units.
   2. Provide data on fire retardant treatment materials and application instructions.
   3. Provide instructions for attachment hardware and finish hardware.

B. Shop Drawings: Indicate materials, component profiles, fastening methods, jointing details, and accessories.
   1. Provide the information required by AWI/AWMAC/WI (AWS) or AWMAC/WI (NAAWS).
   2. Include certification program label.

C. Samples: Plastic laminate for finish selection.

NOT FOR BIDDING

D. Samples: Submit two samples of wood trim 12 inch long.

E. Certificate: Submit labels and certificates required by quality assurance and quality control programs.

1.06 QUALITY ASSURANCE

A. Fabricator Qualifications: Company specializing in fabricating the products specified in this section with minimum five years of documented experience.
   1. Accredited participant in the specified certification program prior to the commencement of fabrication and throughout the duration of the project.
   2. Single Source Responsibility: Provide and install this work from single fabricator.

B. Quality Certification:
   1. Comply with AWI (QCP) woodwork association quality certification service/program in accordance with requirements for work specified in this section. www.awiqcp.org/#sle.
   2. Provide labels or certificates indicating that the work complies with AWI/AWMAC/WI (AWS) or AWMAC/WI (NAAWS) requirements for grade or grades specified.
   3. Provide designated labels on shop drawings as required by certification program.
   4. Provide designated labels on installed products as required by certification program.
   5. Submit certifications upon completion of installation that verifies this work is in compliance with specified requirements.

1.07 DELIVERY, STORAGE, AND HANDLING

A. Store finish carpentry items under cover, elevated above grade, and in a dry, well-ventilated area not exposed to heat or sunlight.

B. Protect work from moisture damage.

C. Handle materials and products to prevent damage to edges, ends, or surfaces.

**PART 2 PRODUCTS**

2.01 FINISH CARPENTRY ITEMS

A. Quality Standard: Premium Grade, in accordance with AWI/AWMAC/WI (AWS) or AWMAC/WI (NAAWS), unless noted otherwise.

B. Surface Burning Characteristics: Provide materials having fire and smoke properties as required by applicable code.

C. Interior Woodwork Items:
   1. Moldings, Bases, Casings, and Miscellaneous Wood Trim: White Maple; prepare for transparent finish.
   2. Wall panels: Plastic laminate over plywood core, with matching hardwood edge.
   3. Custom reception and circulation desks, vertical components: plastic laminate finish; counters: solid surface - see Section 123600.
   4. Wall-Mounted Hooks :
      a. Richelieu stainless contemporary metal hook, Item No. RH1273021170; 1 inch wide x 5-3/4 inches high.
      b. Mount hooks on continuous ledger board : ¾ inch x 7-1/4’ poplar, opaque (paint) finish.
      c. Provide continuous wood blocking in wall at ledger locations. See Section 061000.

2.02 WOOD-BASED COMPONENTS

A. Wood fabricated from old growth timber is not permitted.

NOT FOR BIDDING

2.03 LUMBER MATERIALS

A. Hardwood Lumber: White Maple species, quarter sawn, maximum moisture content of 6 percent, of quality suitable for transparent finish.

B. Hardwood Lumber for Opaque finish: Poplar species, plain sawn, maximum moisture content of 6 percent, of quality suitable for opaque (painted) finish.

2.04 SHEET MATERIALS

A. Hardwood Plywood: Face species White Maple, quarter cut, book matched, medium density fiberboard core; HPVA HP-1, Front Face Grade AA, Back Face Grade 1, glue type as recommended for application.

B. Particleboard: ANSI A208.1; Composed of wood chips, sawdust, or flakes of medium density, made with waterproof resin binders; of grade to suit application; sanded faces.

2.05 PLASTIC LAMINATE MATERIALS

A. Plastic Laminate: NEMA LD 3, HGS; color as selected by Architect; satin finish.

B. Laminate Backing Sheet: NEMA LD 3, BKL; undecorated plastic laminate.

C. Laminate Adhesive: Type recommended by laminate manufacturer to suit application; not containing formaldehyde or other volatile organic compounds.

2.06 FASTENINGS

A. Adhesive for Purposes Other Than Laminate Installation: Suitable for the purpose; not containing formaldehyde or other volatile organic compounds.

B. Concealed Joint Fasteners: Threaded steel.

2.07 SOLID SURFACE MATERIAL

A. See Section 123600.

2.08 ACCESSORIES

A. Primer: as specified in Section 099000.

B. Wood Filler: Solvent base, tinted to match surface finish color.

2.09 HARDWARE

A. Hardware: Comply with BHMA A156.9.

2.10 WOOD TREATMENT

A. Fire Retardant Treatment (FR-S Type): Chemically treated and pressure impregnated; capable of providing flame spread index of 25, maximum, and smoke developed index of 450, maximum, when tested in accordance with ASTM E84.

B. Wood Preservative by Pressure Treatment (PT Type): Provide AWPA U1 treatment using waterborne preservative with 0.25 percent retainage.

C. Shop pressure treat wood materials requiring fire rating to concealed wood blocking.

D. Provide identification on fire retardant treated material.

E. Redry wood after pressure treatment to maximum 10 percent moisture content.

2.11 FABRICATION

A. Shop assemble work for delivery to site, permitting passage through building openings.

B. Fit exposed sheet material edges with 3/8 inch matching hardwood edging. Use one piece for full length only.

NOT FOR BIDDING

C. Cap exposed plastic laminate finish edges with material of same finish and pattern.

D. When necessary to cut and fit on site, provide materials with ample allowance for cutting. Provide trim for scribing and site cutting.

E. Apply plastic laminate finish in full uninterrupted sheets consistent with manufactured sizes. Fit corners and joints hairline; secure with concealed fasteners. Slightly bevel arises. Locate counter butt joints minimum 2 feet from sink cut-outs.

F. Apply laminate backing sheet to reverse face of plastic laminate finished surfaces.

2.12 SHOP FINISHING

A. Apply wood filler in exposed nail and screw indentations.

B. On items to receive transparent finishes, use wood filler that matches surrounding surfaces and is of type recommended for the applicable finish.

C. Finish work in accordance with AWI/AWMAC/WI (AWS) or AWMAC/WI (NAAWS), Section 5 - Finishing for grade specified and as follows:
   1. Transparent:
      a. System - 11, Polyurethane, Catalyzed.
      b. Sheen: Satin.

D. Back prime woodwork items to be field finished prior to installation.

**PART 3 EXECUTION**

3.01 EXAMINATION

A. Verify adequacy of backing and support framing.

B. Verify mechanical, electrical, and building items affecting work of this section are placed and ready to receive this work.

3.02 INSTALLATION

A. Hang doors and install hardware.

B. Install work in accordance with AWI/AWMAC/WI (AWS) requirements for grade indicated.

C. Set and secure materials and components in place, plumb and level.

D. Carefully scribe work butting other components, with maximum gaps of 1/32 inch. Do not use additional overlay trim to conceal larger gaps.

E. Install interior wood trim with finish nails or finish screws, set for filler.

F. Install solid surface window stools.

3.03 SITE APPLIED WOOD TREATMENT

A. Apply preservative treatment in accordance with manufacturer's instructions.

B. Brush apply one coats of preservative treatment on wood in contact with cementitious materials. Treat site-sawn cuts.

C. Allow preservative to dry prior to erecting members.

3.04 PREPARATION FOR SITE FINISHING

A. Set exposed fasteners. Apply wood filler in exposed fastener indentations. Sand work smooth.

B. Before installation, prime paint surfaces of wood items or assemblies to be in contact with cementitious materials.

NOT FOR BIDDING

3.05 TOLERANCES

A. Maximum Variation from True Position: 1/16 inch.

B. Maximum Offset from True Alignment with Abutting Materials: 1/32 inch.

**END OF SECTION**

NOT FOR BIDDING

# SECTION 071113
# BITUMINOUS DAMPPROOFING

## PART 1 GENERAL

1.01 SECTION INCLUDES

A. Bituminous dampproofing.

B. Protection boards.

C. Drainage panels.

1.02 SUBMITTALS

A. Product Data: Provide properties of primer, bitumen, and mastics.

B. Manufacturer's Installation Instructions: Indicate special procedures and perimeter conditions requiring special attention.

1.03 QUALITY ASSURANCE

A. Installer Qualifications: Company specializing in performing the work of this section with at least three years of experience.

1.04 FIELD CONDITIONS

A. Maintain ambient temperatures above 40 degrees F for 24 hours before and during application until dampproofing has cured.

## PART 2 PRODUCTS

2.01 BITUMINOUS DAMPPROOFING

A. Bituminous Dampproofing: Cold applied, water-based emulsion; asphalt with mineral colloid or chemical emulsifying agent; with or without fiber reinforcement; asbestos-free; suitable for application on vertical and horizontal surfaces.

1. Composition - Vertical Application: ASTM D1227 Type III or ASTM D1187/D1187M Type I.
2. VOC Content: Not more than permitted by local, State, and federal regulations.
3. Applied Thickness: 1/16 inch, minimum, wet film.
4. Products:
   a. W. R. Meadows, Inc; Sealmastic Emulsion Type I (spray-grade): www.wrmeadows.com/#sle.
   b. Substitutions: See Section 016000 - Product Requirements.

B. Primers, Mastics, and Related Materials: Type as recommended by dampproofing manufacturer.

2.02 BITUMEN MATERIALS

A. Cold Asphaltic Type:

1. Bitumen: Emulsified asphalt, ASTM D1227;unreinforced (Type III).
2. Asphalt Primer: ASTM D41/D41M, compatible with substrate.

2.03 ACCESSORIES

A. Drainage Panel: 1/4 inch thick formed plastic, hollowed sandwich.

B. Protection Board: 1/8 inch thick biodegradable hardboard.

## PART 3 EXECUTION

3.01 EXAMINATION

A. Verify existing conditions are acceptable prior to starting this work.

NOT FOR BIDDING

B. Verify substrate surfaces are durable, free of matter detrimental to adhesion or application of dampproofing system.

C. Verify that items penetrating surfaces to receive dampproofing are securely installed.

3.02 PREPARATION

A. Protect adjacent surfaces not designated to receive dampproofing.

B. Clean and prepare surfaces to receive dampproofing in accordance with manufacturer's instructions.

C. Do not apply dampproofing to surfaces unacceptable to manufacturer.

D. Apply mastic to seal penetrations, small cracks, or minor honeycombs in substrate.

3.03 APPLICATION

A. Foundation walls at screen walls: Apply two coats of asphalt dampproofing.

B. Perform this work in accordance with manufacturer's instructions and NRCA (WM) applicable requirements.

C. Prime surfaces at a rate approved by manufacturer for application indicated, and allow primer to dry thoroughly.

D. Apply bitumen by spray application.

E. Apply bitumen in one coat, continuous and uniform, at a rate of 25 sq ft/gal per coat.

F. Apply from 2 inches below finish grade elevation, or below first course of face brick, down to top of grade beam at locations where two or more CMU courses are below grade.

G. Seal items watertight with mastic, that project through dampproofing surface.

H. Place drainage panel directly over dampproofing, butt joints, place to encourage drainage downward.

I. Place protection board over drainage panel, butt joints, and adhere with mastic.

J. Scribe and cut board around projections, penetrations, and interruptions.

**END OF SECTION**

NOT FOR BIDDING

# SECTION 071300
# SHEET WATERPROOFING

## PART 1 GENERAL

1.01 SECTION INCLUDES

A. Sheet Waterproofing:
   1. Self-adhered modified bituminous sheet membrane.
   2. Self-adhered HDPE sheet membrane.

B. Drainage panels and protection board.

1.02 RELATED REQUIREMENTS

A. Section 033000 - Cast-in-Place Concrete: Concrete substrate.

B. Section 042000 - Unit Masonry: CMU substrate.

C. Section 079200 - Joint Sealants: Sealing moving joints in waterproofed surfaces that are not required to be treated in this section.

1.03 ABBREVIATIONS

A. HDPE - High-Density Polyethylene.

B. NRCA - National Roofing Contractors Association.

1.04 REFERENCE STANDARDS

A. ASTM D412 - Standard Test Methods for Vulcanized Rubber and Thermoplastic Elastomers--Tension; 2006a (Reapproved 2013).

B. ASTM D570 - Standard Test Method for Water Absorption of Plastics; 1998 (Reapproved 2010).

C. ASTM D882 - Standard Test Method for Tensile Properties of Thin Plastic Sheeting; 2012.

D. ASTM D903 - Standard Test Method for Peel or Stripping Strength of Adhesive Bonds; 1998 (Reapproved 2010).

E. ASTM D1876 - Standard Test Method for Peel Resistance of Adhesives (T-Peel Test); 2008 (Reapproved 2015).

F. ASTM D1970/D1970M - Standard Specification for Self-Adhering Polymer Modified Bituminous Sheet Materials Used as Steep Roofing Underlayment for Ice Dam Protection; 2013.

G. ASTM D5385/D5385M - Standard Test Method for Hydrostatic Pressure Resistance of Waterproofing Membranes; 1993 (Reapproved 2014).

H. ASTM E96/E96M - Standard Test Methods for Water Vapor Transmission of Materials; 2014.

I. ASTM E154/E154M - Standard Test Methods for Water Vapor Retarders Used in Contact with Earth Under Concrete Slabs, on Walls, or as Ground Cover; 2008a (Reapproved 2013).

J. NRCA (WM) - The NRCA Waterproofing Manual; 2005.

1.05 SUBMITTALS

A. See Section 013000 - Administrative Requirements, for submittal procedures.

B. Product Data: Provide data for membrane.

C. Shop Drawings: Indicate special joint or termination conditions and conditions of interface with other materials.

D. Certificate: Certify that products meet or exceed specified requirements.

NOT FOR BIDDING

E. Manufacturer's Installation Instructions: Indicate special procedures.

F. Warranty: Submit manufacturer warranty and ensure forms have been completed in Owner's name and registered with manufacturer.

1.06 QUALITY ASSURANCE

A. Membrane Manufacturer Qualifications: Company specializing in manufacturing products specified in this section, with not less than three years of documented experience.

B. Installer Qualifications: Company specializing in performing work of the type specified and with at least three years of documented experience.

1.07 FIELD CONDITIONS

A. Maintain ambient temperatures above 40 degrees F for 24 hours before and during application and until liquid or mastic accessories have cured.

1.08 WARRANTY

A. See Section 017800 - Closeout Submittals, for additional warranty requirements.

B. Contractor shall correct defective Work within a five year period after Date of Substantial Completion; remove and replace materials concealing waterproofing at no extra cost to Owner.

C. Provide five year manufacturer warranty for waterproofing failing to resist penetration of water, except where such failures are the result of structural failures of building. Hairline cracking of concrete due to temperature change or shrinkage is not considered a structural failure.

**PART 2 PRODUCTS**

2.01 MEMBRANE MATERIALS

A. Self-Adhered Modified Bituminous Sheet Membrane:

1. Thickness: 60 mil, 0.060 inch, minimum.
2. Sheet Width: 36 inch, minimum.
3. Tensile Strength:
   a. Film: 5000 pounds per square inch, minimum, measured according to ASTM D882 and at grip-separation rate of 2 inches per minute.
   b. Membrane: 325 pounds per square inch, minimum, measured according to ASTM D412 Method A, using die C and at spindle-separation rate of 2 inches per minute.
4. Elongation at Break: 300 percent, minimum, measured according to ASTM D412.
5. Water Vapor Permeance: 0.05 perm, maximum, measured in accordance with ASTM E96/E96M.
6. Low Temperature Flexibility: Unaffected when tested according to ASTM D1970/D1970M at minus 20 degrees F, 180 degree bend on 1 inch mandrel.
7. Peel Strength: 7 pounds per inch, minimum, when tested according to ASTM D903.
8. Lap Adhesion Strength: 5 pounds per inch, minimum, when tested according to ASTM D1876.
9. Puncture Resistance: 50 pounds, minimum, measured in accordance with ASTM E154/E154M.
10. Water Absorption: 0.1 percent increase in weight, maximum, measured in accordance with ASTM D570, 24 hour immersion.
11. Hydrostatic Resistance: Resists the weight of 200 feet when tested according to ASTM D5385/D5385M.
12. Adhesives, Sealants, Tapes, and Accessories: As recommended by membrane manufacturer.

NOT FOR BIDDING

13. Manufacturers:
    a. Carlisle Coatings & Waterproofing Inc; MiraDRI 860/861: www.carlisleccw.com/#sle.
    b. GCP Applied Technologies; Bituthene: www.gcpat.com.
    c. Henry Company; Blueskin WP 200: www.henry.com/#sle.
    d. Substitutions: See Section 016000 - Product Requirements.

B. Self-Adhered HDPE Sheet Membrane: Recommended by manufacturer for placement below concrete slabs and on outside face of below grade walls before placement of concrete.
1. Sheet Thickness: 46 mil (0.046 inch), minimum.
2. Low Temperature Flexibility: Unaffected when tested according to ASTM D1970/D1970M at minus 20 degrees F, 180 degree bend on 1 inch mandrel.
3. Hydrostatic Resistance: Resists the weight of 231 feet when tested according to ASTM D5385/D5385M.
4. Elongation at Break: 500 percent, minimum, measured according to ASTM D412.
5. Tensile Strength, Film: 3,500 pounds per square inch, minimum, measured according to ASTM D412.
6. Lap Peel Adhesion: 5 pounds per inch, minimum, when tested according to ASTM D1876.
7. Water Vapor Permeance: 0.01 perm, maximum, measured in accordance with ASTM E96/E96M.
8. Bond to Concrete: 5 pounds per inch, minimum, per ASTM D903.
9. Lateral Water Migration Resistance: Resists the weight of 231 feet when tested according to ASTM D5385/D5385M.
10. Adhesives, Sealants, Tapes, and Accessories: As recommended by membrane manufacturer.
11. Manufacturers:
    a. GCP Applied Technologies; Preprufe 300R: www.gcpat.com/#sle.
    b. W. R. Meadows; PRECON: www.wrmeadows.com.
    c. Substitutions: See Section 016000 - Product Requirements.

C. Seaming Materials: As recommended by membrane manufacturer.

D. Membrane Sealant: As recommended by membrane manufacturer.

2.02 ACCESSORIES

A. Sealant for Cracks and Joints In Substrates: Resilient elastomeric joint sealant compatible with substrates and waterproofing materials.

B. Protection Board: Provide type capable of preventing damage to waterproofing due to backfilling and construction traffic.

C. Drainage Panel: Drainage layer with geotextile filter fabric on earth side.
1. Composition: Dimpled polystyrene core; polypropylene filter fabric.
2. Products:
    a. Epro Services, Inc; ECODRAIN-MS: www.eproserv.com/#sle.
    b. Mar-flex Waterproofing & Building Products; ArmorDrain 150: www.mar-flex.com/#sle.
    c. Mar-flex Waterproofing & Building Products; ArmorDrain 400 Protection/Drainage Board: www.mar-flex.com/#sle.

D. Flexible Flashings: Type recommended by membrane manufacturer.

NOT FOR BIDDING

**PART 3 EXECUTION**

3.01 EXAMINATION

A. Verify existing conditions are acceptable prior to starting this work.

B. Verify substrate surfaces are durable; free of matter detrimental to adhesion or application of waterproofing system.

C. Verify items that penetrate surfaces to receive waterproofing are securely installed.

3.02 PREPARATION

A. Protect adjacent surfaces from damage not designated to receive waterproofing.

B. Clean and prepare surfaces to receive waterproofing in accordance with manufacturer's instructions.

C. Do not apply waterproofing to surfaces unacceptable to membrane manufacturer.

D. Fill non-moving joints and cracks with a filler compatible with waterproofing materials.

E. Seal moving cracks with sealant and non-rigid filler, using procedures recommended by sealant and waterproofing manufacturers.

F. Prepare building expansion joints at locations as indicated on drawings.

G. Apply surface conditioner at a rate recommended by manufacturer, and protect conditioner from rain or frost until dry.

3.03 INSTALLATION - MEMBRANE

A. Install membrane waterproofing in accordance with manufacturer's instructions and NRCA (WM) applicable requirements.

B. Roll out membrane, and minimize wrinkles and bubbles.

C. Self-Adhering Membrane: Remove release paper layer, and roll out onto substrate with a mechanical roller to provide full contact bond.

D. Overlap edges and ends, minimum 3 inches, seal permanently waterproof by method recommended by manufacturer, and apply uniform bead of sealant to joint edge.

E. Reinforce membrane with multiple thickness of membrane material over joints, whether joints are static or dynamic.

F. Weather lap joints on sloped substrate in direction of drainage, and seal joints and seams.

G. Flexible Flashings: Seal items watertight that penetrate through waterproofing membrane with flexible flashings.

H. Seal membrane and flashings to adjoining surfaces.

3.04 INSTALLATION - DRAINAGE PANEL AND PROTECTION BOARD

A. Place drainage panel directly against membrane, butt joints, place to encourage drainage downward. Scribe and cut boards around projections, penetrations, and interruptions.

B. Place protection board directly against drainage panel; butt joints. Scribe and cut boards around projections, penetrations, and interruptions.

C. Adhere protection board to substrate with compatible adhesive.

3.05 PROTECTION

A. Do not permit traffic over unprotected or uncovered membrane.

NOT FOR BIDDING

3.06 SCHEDULE

A. Typical Exterior Perimeter Foundation Walls: Self-Adhered Modified Bituminous Sheet Membrane, from top of concrete footing to 12" (304 mm) above finished First Floor elevation.

B. Elevator Pits: Self-Adhered Modified Bituminous Sheet Membrane at walls; Self-Adhered HDPE Sheet Membrane (blind-side) below concrete footings.

**END OF SECTION**

NOT FOR BIDDING

# SECTION 072100
# THERMAL INSULATION

## PART 1 GENERAL

1.01 SECTION INCLUDES

A. Board insulation at perimeter foundation wall.

B. Batt insulation in exterior wall construction.

C. Acoustical insulation in interior acoustically rated partitions.

D. Fire safing insulation at fire partitions and perimeter firestopping at curtain walls.

1.02 RELATED REQUIREMENTS

A. Section 072640 - Spray Polyurethane Foam Insulating Air Barrier: Plastic foam insulation other than boards.

B. Section 072500 - Weather Barriers: Separate air barrier and vapor retarder materials.

C. Section 075300 - Elastomeric Membrane Roofing: Insulation specified as part of roofing system.

1.03 REFERENCE STANDARDS

A. ASTM C553 - Standard Specification for Mineral Fiber Blanket Thermal Insulation for Commercial and Industrial Applications; 2013.

B. ASTM C578 - Standard Specification for Rigid Cellular Polystyrene Thermal Insulation; 2016.

C. ASTM C612 - Standard Specification for Mineral Fiber Block and Board Thermal Insulation; 2014.

D. ASTM C665 - Standard Specification for Mineral-Fiber Blanket Thermal Insulation for Light Frame Construction and Manufactured Housing; 2012.

E. ASTM E84 - Standard Test Method for Surface Burning Characteristics of Building Materials; 2016.

1.04 SUBMITTALS

A. See Section 013000 - Administrative Requirements, for submittal procedures.

B. Product Data: Provide data on product characteristics, performance criteria, and product limitations.

C. Manufacturer's Certificate: Certify that products meet or exceed specified requirements.

D. Manufacturer's Installation Instructions: Include information on special environmental conditions required for installation and installation techniques.

1.05 FIELD CONDITIONS

A. Do not install insulation adhesives when temperature or weather conditions are detrimental to successful installation.

## PART 2 PRODUCTS

2.01 APPLICATIONS

A. Insulation types are:

1. Type 1 - Batt/blanket insulation - unfaced.
2. Type 2 - Batt/blanket insulation with vapor barrier (NOT USED).
3. Type 3 - Perimeter insulation - rigid.

NOT FOR BIDDING

4. Type 4 - Cavity wall insulation - rigid (NOT USED)
5. Type 4A - Cavity wall insulation - mineral fiber
6. Type 5 - Acoustical insulation.
7. Type 6 - Fire safing insulation.
8. Type 7 - Spray polyurethane foam insulation.

B. Insulation Type 3 at Perimeter of Foundation: Extruded polystyrene board.

C. Acoustical Insulation Type 5 in sound rated partitions.

D. Fire safing insulation Type 6 at voids and penetrations of fire separations and smoke walls.
   1. For terminations of rated CMU partitions to deck above.

E. Insulation Type 7 on Masonry Cavity Walls with brick cladding (Typical): Spray Polyurethane Foam, Refer to Section 07 2640.

F. Insulation Type 7 on Masonry Cavity Walls with metal panel cladding (Typical): Spray Polyurethane Foam, Refer to Section 07 2640.

G. Insulation Type 7 over sheathing and metal stud framed walls, continuous (Typical): Spray Polyurethane Foam, Refer to Section 07 2640.

H. Insulation Type 4A where indicated Exterior Walls: Mineral Fiber.

I. Insulation Type 1 in Metal Framed Walls: Batt insulation with no vapor retarder.

J. Insulation Over Roof Deck: Polyisocyanurate board. Refer to Section 075300.

2.02 FOAM BOARD INSULATION MATERIALS

A. Type 3: Extruded Polystyrene Board Insulation: Extruded polystyrene board; ASTM C578; with either natural skin or cut cell surfaces, and the following characteristics:
   1. Type: ASTM C578, Type V.
   2. Flame Spread Index (FSI): Class A - 0 to 25, when tested in accordance with ASTM E84.
   3. Smoke Developed Index (SDI): 450 or less, when tested in accordance with ASTM E84.
   4. R-value; 1 inch of material at 72 degrees F: 5, minimum.
   5. Board Edges: Square.
   6. Water Absorption, Maximum: 0.3 percent, by volume.
   7. Manufacturers:
      a. Dow Chemical Company; STYROFOAM HIGHLOAD 40: www.dowbuildingsolutions.com/#sle.
      b. Owens Corning Corporation; FOAMULAR Extruded Polystyrene (XPS) Insulation: www.ocbuildingspec.com/#sle.
      c. Substitutions: See Section 016000 - Product Requirements.

2.03 FIBERBOARD INSULATION MATERIALS

A. Mineral Fiber Board Cavity Insulation Type 4A:
   Manufacturer: Rockwool CavityRock
   2. Type: mineral wool fiber insulation board.
   3. Edges: square.
   4. Size: 16" x 48".
   5. Thickness: as shown on drawings.
   6. Density : 6.2 lbs/ft³ (100 kg/m³) outer layer and 3.8 lbs/ft³ (61 kg/m³) inner layer
   7. Thermal resistivity (r-value): 4.3 per inch thickness per ASTM C 518.
   8. Water vapor permeance: 27.2 perm per ASTM E 96.
   9. ASTM compliance: ASTM C 612 Type IVB.

NOT FOR BIDDING

B. Mineral Fiber Board Insulation Type 6: Rigid or semi-rigid mineral fiber, ASTM C612 or ASTM C553; unfaced flame spread index of 0 (zero) when tested in accordance with ASTM E84.
   1. Smoke Developed Index: 450 or less, when tested in accordance with ASTM E84.
   2. Manufacturers:
      a. ROCKWOOL (ROXUL, Inc); CURTAINROCK 80: www.rockwool.com/#sle.
      b. ROCKWOOL (ROXUL, Inc); CURTAINROCK 40: www.rockwool.com/#sle.
      c. ROCKWOOL (ROXUL, Inc); ROXUL SAFE 65: www.rockwool.com/#sle.
      d. Substitutions: See Section 016000 - Product Requirements.

2.04 BATT INSULATION MATERIALS

A. Type 1 and Type 5 Mineral Fiber Batt Insulation: Flexible or semi-rigid preformed batt or blanket, complying with ASTM C665; friction fit; unfaced flame spread index of 0 (zero) when tested in accordance with ASTM E84.
   1. Smoke Developed Index: 0 (zero), when tested in accordance with ASTM E84.
   2. Manufacturers:
      a. Johns Manville; MinWool Sound Attenuation Fire Batt: www.jm.com/#sle.
      b. Thermafiber, Inc; SAFB: www.thermafiber.com/#sle.
      c. ROCKWOOL (ROXUL, Inc); AFB evo™: www.rockwool.com/#sle.
      d. Substitutions: See Section 016000 - Product Requirements.

2.05 ACCESSORIES

A. Insulation Fasteners: Impaling clip of nylon with washer retainer and clips, to be adhered to surface to receive insulation, length to suit insulation thickness and substrate, capable of securely and rigidly fastening insulation in place.

B. Adhesive: Type recommended by insulation manufacturer for application.

**PART 3 EXECUTION**

3.01 EXAMINATION

A. Verify that substrate, adjacent materials, and insulation materials are dry and that substrates are ready to receive insulation.

B. Verify substrate surfaces are flat, free of irregularities or materials or substances that may impede adhesive bond.

3.02 BOARD INSTALLATION AT FOUNDATION PERIMETER

A. Install boards vertically and/or horizontally on foundation perimeter as shown.
   1. Place boards to maximize adhesive contact.
   2. Install in running bond pattern.
   3. Butt edges and ends tightly to adjacent boards and to protrusions.

B. Cut and fit insulation tightly to protrusions or interruptions to the insulation plane.

3.03 BOARD INSTALLATION AT CAVITY WALLS

A. Install boards horizontally on walls.
   1. Place boards to maximize adhesive contact.
   2. Butt edges and ends tightly to adjacent boards and to protrusions.

B. Cut and fit insulation tightly to protrusions or interruptions to the insulation plane.

3.04 BOARD INSTALLATION UNDER CONCRETE SLABS

A. Place insulation under slabs on grade after base for slab has been compacted.

NOT FOR BIDDING

B. Cut and fit insulation tightly to protrusions or interruptions to the insulation plane.

C. Prevent insulation from being displaced or damaged while placing vapor retarder and placing slab.

3.05 BATT INSTALLATION

A. Install insulation in accordance with manufacturer's instructions.

B. Install in exterior wall and roof spaces without gaps or voids. Do not compress insulation.

C. Trim insulation neatly to fit spaces. Insulate miscellaneous gaps and voids.

D. Fit insulation tightly in cavities and tightly to exterior side of mechanical and electrical services within the plane of the insulation.

3.06 PROTECTION

A. Do not permit installed insulation to be damaged prior to its concealment.

**END OF SECTION**

NOT FOR BIDDING

# SECTION 072129
# SPRAYED ACOUSTICAL INSULATION

## PART 1 GENERAL

1.01 SECTION INCLUDES

A. Cellulose insulation applied to underside of structure.

1.02 REFERENCE STANDARDS

A. ASTM C518 - Standard Test Method for Steady-State Thermal Transmission Properties by Means of the Heat Flow Meter Apparatus; 2015.

B. ASTM C739 - Standard Specification for Cellulosic Fiber Loose-Fill Thermal Insulation; 2011.

C. ASTM E84 - Standard Test Method for Surface Burning Characteristics of Building Materials; 2016.

1.03 SUBMITTALS

A. See Section 013000 - Administrative Requirements, for submittal procedures.

B. Product Data: Provide data on materials, describing insulation properties.

C. Certificates: Certify that products of this section meet or exceed specified requirements.

D. Manufacturer's Installation Instructions: Indicate special procedures, perimeter conditions requiring special attention.

E. Manufacturer's Qualification Statement.

F. Submit manufacturer's written certification that product contains no asbestos, fiberglass or other man-made mineral fibers.

1.04 QUALITY ASSURANCE

A. Manufacturer Qualifications: Company specializing in manufacturing products specified in this section, with not less than three years of documented experience.

B. Installer Qualifications: Company specializing in performing the work of this section and approved by manufacturer.

1.05 MOCK-UP

A. Provide room mock-up, 10 feet long by 10 feet wide miniumum, illustrating ceiling construction.

B. Locate where directed.

C. Mock-up may remain as part of the Work.

1.06 DELIVERY, STORAGE AND HANDLING

A. Deliver in original, unopened containers bearing name of manufacturer, product identification and reference to U.L. testing.

B. Store materials dry, off ground, and under cover.

C. Protect liquid adhesive from freezing.

1.07 FIELD CONDITIONS

A. Maintain acceptable ambient and substrate surface temperatures prior to, during, and after installation of primer and insulation materials and overcoat.

B. Clips, hangers, supports, sleeves and other attachments to spray bases are to be placed by other trades prior to the application of sprayed insulation.

NOT FOR BIDDING

C. Ducts, piping, conduit or other suspended equipment shall not be positioned until after the application of sprayed insulation.

D. Roof penetrations to be installed prior to application.

**PART 2 PRODUCTS**

2.01 MANUFACTURERS

A. Cellulosic Fiber Sprayed Insulation:
   1. International Cellulose Corp; K-13 Spray-On-Systems: www.spray-on.com.
   2. Isolatek International, Cafco Heat-Shield: www.isolatek.com.
   3. Substitutions: See Section 016000 - Product Requirements.

2.02 MATERIALS

A. Cellulose Fiber Insulation: ASTM C739; treated cellulose fiber, color as selected from manufacturers standard range.
   1. Thickness: 2 inches, unless otherwise noted.
   2. Acoustical performance: NRC of 0.95 (ASTM C 423).

B. Material to have been tested in accordance with ASTM E 1042. Testing laboratory must be NVLAP accredited.

C. Product shall meet or exceed the following requirements:
   1. Bond strength shall be greater than 100 psf per ASTM E 736.
   2. Product shall be Class 1 Class A per ASTM E 84/UL 723.
   3. Non-corrosive per ASTM C 739.
   4. Bond Deflection per ASTM E 736 6" Deflection in 10' Span - No Spalling or Delamination.
   5. R-Value to be 3.75 per inch per ASTM C518.
   6. Comply with IBC 803.5/2009 IBC 803.10 stability requirements for interior finishes.
   7. Meet ASTM C 1149.

D. Product shall not contain any added Urea-Formaldehyde Resins.

2.03 ACCESSORIES

A. Primer: As required by insulation manufacturer.

**PART 3 EXECUTION**

3.01 EXAMINATION

A. Verify that surfaces are clean, dry, and free of matter that may inhibit adhesion.

B. Verify that ceiling hangers and supporting clips have been are installed correctly.

C. Verify other work on and within spaces to be insulated is complete prior to application.

3.02 PREPARATION

A. Mask and protect adjacent surfaces from overspray or damage.

B. Apply primer in accordance with manufacturer's instructions.

3.03 INSTALLATION

A. Install sprayed insulation in accordance with manufacturer's instructions.

B. Install sprayed insulation to a uniform monolithic density without voids.

C. Install to a minimum cured thickness of 2 inches.

NOT FOR BIDDING

3.04 PROTECTION

A. Do not permit subsequent construction work to disturb applied sprayed insulation.

**END OF SECTION**

NOT FOR BIDDING

# SECTION 072400
# EXTERIOR INSULATION AND FINISH SYSTEMS

## PART 1 GENERAL

1.01 SECTION INCLUDES

A. Soffit Vents and Control Joints.

B. Composite wall and soffit cladding of rigid insulation and reinforced finish coating over cementitious base coat (Class PM).

C. Incidental uses of same finish coating applied directly to masonry and cement board.

1.02 RELATED REQUIREMENTS

A. Section 076200 - Sheet Metal Flashing and Trim: Perimeter flashings.

B. Section 079200 - Joint Sealants: Sealing joints between EIFS and adjacent construction and penetrations through EIFS.

C. Section 092116 - Gypsum Board Assemblies: Cement Board substrates.

1.03 REFERENCE STANDARDS

A. ASTM B117 - Standard Practice for Operating Salt Spray (Fog) Apparatus; 2016.

B. ASTM B221 - Standard Specification for Aluminum and Aluminum-Alloy Extruded Bars, Rods, Wire, Profiles, and Tubes; 2014.

C. ASTM B221M - Standard Specification for Aluminum and Aluminum-Alloy Extruded Bars, Rods, Wire, Profiles, and Tubes (Metric); 2013.

D. ASTM C150/C150M - Standard Specification for Portland Cement; 2015.

E. ASTM C1397 - Standard Practice for Application of Class PB Exterior Insulation and Finish Systems (EIFS) and EIFS with Drainage; 2013.

F. ASTM D968 - Standard Test Methods for Abrasion Resistance of Organic Coatings by Falling Abrasive; 2015.

G. ASTM D2247 - Standard Practice for Testing Water Resistance of Coatings in 100% Relative Humidity; 2015.

H. ASTM D3273 - Standard Test Method for Resistance to Growth of Mold on the Surface of Interior Coatings in an Environmental Chamber; 2016.

I. ASTM E331 - Standard Test Method for Water Penetration of Exterior Windows, Skylights, Doors, and Curtain Walls by Uniform Static Air Pressure Difference; 2000 (Reapproved 2016).

J. ASTM E2486/E2486M - Standard Test Method for Impact Resistance of Class PB and PI Exterior Insulation and Finish Systems (EIFS); 2013.

K. ASTM G153 - Standard Practice for Operating Enclosed Carbon Arc Light Apparatus for Exposure of Nonmetallic Materials; 2013.

L. ASTM G155 - Standard Practice for Operating Xenon Arc Light Apparatus for Exposure of Nonmetallic Materials; 2013.

M. ICC-ES AC219 - Acceptance Criteria for Exterior Insulation and Finish Systems; 2009.

N. ICC-ES AC235 - Acceptance Criteria for EIFS Clad Drainage Wall Assemblies; 2004 (Editorially revised 2009).

O. NFPA 268 - Standard Test Method for Determining Ignitibility of Exterior Wall Assemblies Using a Radiant Heat Energy Source; 2012.

NOT FOR BIDDING

P. NFPA 285 - Standard Fire Test Method for Evaluation of Fire Propagation Characteristics of Exterior Non-Load-Bearing Wall Assemblies Containing Combustible Components; 2012.

1.04 SUBMITTALS

A. Product Data: Provide data on system materials, product characteristics, performance criteria, system limitations, and soffit vents.

B. Selection Samples: Submit manufacturer's standard range of samples illustrating available coating colors and textures.

C. Verification Samples: Submit actual samples of selected coating on specified substrate, minimum 12 inches square, illustrating project colors and textures.

D. Manufacturer's Installation Instructions: Indicate preparation required, installation techniques, and jointing requirements.

1.05 QUALITY ASSURANCE

A. Maintain copy of specified installation standard and manufacturer's installation instructions at project site during installation.

B. EIFS Manufacturer Qualifications: Provide EIFS products other than insulation from the same manufacturer with qualifications as follows:

1. Manufacturer of EIFS products for not less than 5 years.

C. Installer Qualifications: Company specializing in the type of work specified and with at least three years of documented experience and approved by manufacturer.

1.06 DELIVERY, STORAGE, AND HANDLING

A. Delivery: Deliver materials to project site in manufacturer's original, unopened containers with labels intact. Inspect materials and notify manufacturer of any discrepancies.

B. Storage: Store materials as directed by manufacturer's written instructions.

1.07 FIELD CONDITIONS

A. Do not prepare materials or apply EIFS under conditions other than those described in the manufacturer's written instructions.

B. Do not prepare materials or apply EIFS during inclement weather unless areas of installation are protected. Protect installed EIFS areas from inclement weather until dry.

C. Do not install coatings or sealants when ambient temperature is below 40 degrees F.

D. Do not leave installed insulation board exposed to sunlight for extended periods of time.

1.08 WARRANTY

A. See Section 017800 - Closeout Submittals, for additional warranty requirements.

B. Provide manufacturer's standard material warranty, covering a period of not less than 5 years.

**PART 2 PRODUCTS**

2.01 MANUFACTURERS

A. Manufacturers:

1. Basis of Design: Dryvit Systems, Inc; Dryvit Textured Acrylic Finish System (TAFS) Option 2; www.dryvit.com.
2. Substitutions: See Section 016000 - Product Requirements.

2.02 EXTERIOR INSULATION AND FINISH SYSTEM

A. Fire Characteristics:

NOT FOR BIDDING

1. Flammability: Pass, when tested in accordance with NFPA 285.
2. Ignitibility: No sustained flaming when tested in accordance with NFPA 268.

B. Water Penetration Resistance: No water penetration beyond the plane of the base coat/insulation board interface after 15 minutes, when tested in accordance with ASTM E331 at 6.24 psf differential pressure with tracer dye in the water spray; include in tested sample at least two vertical joints and one horizontal joint of same type to be used in construction; disassemble sample if necessary to determine extent of water penetration.

C. Salt Spray Resistance: No cracking, checking, crazing, erosion, blistering, peeling, delamination, or corrosion of finish coating after 300 hours exposure in accordance with ASTM B117, using at least three samples matching intended assembly, at least 4 by 6 inches in size.

D. Freeze-Thaw Resistance: No cracking, checking, crazing, erosion, blistering, peeling, delamination, or corrosion of finish coating when viewed under 5x magnification after 10 cycles, when tested in accordance with ICC-ES AC219 or ICC-ES AC235.

E. Weathering Resistance: No cracking, checking, crazing, erosion, blistering, peeling, delamination, or corrosion of finish coating when viewed under 5x magnification after 2000 hours of accelerated weathering conducted in accordance with ASTM G153 Cycle 1 or ASTM G155 Cycles 1, 5, or 9.

F. Water Degradation Resistance: No cracking, checking, crazing, erosion, blistering, peeling, delamination, or corrosion of finish coating after 14 days exposure, when tested in accordance with ASTM D2247.

G. Mildew Resistance: No growth supported on finish coating during 28 day exposure period, when tested in accordance with ASTM D3273.

H. Abrasion Resistance Of Finish: No cracking, checking or loss of film integrity when tested in accordance with ASTM D968 with 11.5 gallons of sand.

I. Impact Resistance: Construct system to provide the following impact resistance without exposure of broken reinforcing mesh, when tested in accordance with ASTM E2486/E2486M:
   1. Standard: 25 to 49 in-lb, for areas not indicated as requiring higher impact resistance.

2.03 MATERIALS

A. Finish Coating Top Coat: Water-based, air curing, acrylic or polymer-based finish with integral color and texture.
   1. Texture: Dryvit Systems, Inc, Standard Textures, with Dirt Pickup Resistance; Sandpebble Fine DPR; www.dryvit.com/#sle.

B. Primer
   Color Prime: Pigmented, acrylic based primer used to improve adhesion and uniformity of finish color.

C. Base Coat: Polymer-modified, fiber reinforced Portland cement coating.
   1. Portland Cement: ASTM C150/C150M, Type I or II.
   2. Base Coat Thickness: 1/4 inch, minimum.
   3. Manufacturers:
      a. Dryvit Primus or Genesis.
      b. Substitutions: See Section 016000 - Product Requirements.

D. Reinforcing Mesh: Balanced, open weave glass fiber fabric, treated for compatibility and improved bond with coating, weight, strength, and number of layers as required to meet required system impact rating.

NOT FOR BIDDING

2.04 ACCESSORY MATERIALS

A. Metal Flashings: As specified in Section 076200.

B. Trim: EIFS manufacturer's standard PVC or galvanized steel trim accessories, as required for a complete project and including starter track and drainage accessories.

C. Sealant Materials: Compatible with EIFS materials and as recommended by EIFS manufacturer.

D. Exterior Soffit Vents: One piece, perforated, ASTM B221 (ASTM B221M), 6063 alloy, T5 temper, aluminum, with plaster or EIFS edge and manufactured especially for soffit application. Provide continuous vent.
   1. Size: 3"
   2. Color: white.
   3. Fry Reglet Model DRM-625-V-300.
   4. Substitutions: See Section 016000 - Product Requirements.

**PART 3 EXECUTION**

3.01 GENERAL

A. Install in accordance with EIFS manufacturer's instructions and ASTM C1397.

B. Where different requirements appear in either document, comply with the most stringent.

C. Neither of these documents supercedes the provisions of the Contract Documents that define the contractual relationships between the parties or the scope of work.

3.02 EXAMINATION

A. Verify that substrate is sound and free of oil, dirt, other surface contaminants, efflorescence, loose materials, or protrusions that could interfere with EIFS installation and is of a type and construction that is acceptable to EIFS manufacturer. Do not begin work until substrate and adjacent materials are complete and thoroughly dry.

B. Verify that substrate surface is flat, with no deviation greater than 1/4 in when tested with a 10 ft straightedge.

3.03 INSTALLATION - GENERAL

A. Install in accordance with EIFS manufacturer's instructions and ASTM C1397.
   1. Where different requirements appear in either document, comply with the most stringent.
   2. Neither of these documents supercedes provisions of Contract Documents that defines contractual relationships between parties or scope of this work.

3.04 INSTALLATION - WATER-RESISTIVE BARRIER

A. Apply barrier coating as recommended by coating manufacturer; prime substrate as required before application.

B. Seal substrate transitions and intersections with other materials to form continuous water-resistive barrier on exterior of sheathing, using method recommended by manufacturer.

C. At door and window rough openings and other wall penetrations, seal water-resistive barrier and flexible flashings to rough opening before installation of metal flashings, sills, or frames, using method recommended by manufacturer.

D. Lap flexible flashing or flashing tape at least 2 inches on each side of joint or transition.

E. Exterior Soffit Vents: Install according to manufacturer's written instructions and in locations indicated on the drawings. Provide vent area indicated on drawings.

NOT FOR BIDDING

3.05 INSTALLATION - FINISH

A. Joints: Install control joints at spacings indicated on the drawings. Do not exceed 400 sq ft for areas defined by the placement of control joints.

B. Base Coat: Apply in thickness as necessary to fully embed reinforcing mesh, wrinkle free, including back-wrap at terminations of EIFS. Install reinforcing fabric as recommended by EIFS manufacturer.
   1. Lap reinforcing mesh edges and ends a minimum of 2-1/2 inches.
   2. Allow base coat to dry a minimum of 24 hours before next coating application.

C. Apply primer and finish coat after base coat has dried not less than 24 hours, embed finish aggregate, and finish to a uniform texture and color.

D. Finish Coat Thickness: As recommended by manufacturer.

E. Seal control and expansion joints within the field of exterior finish and insulation system, using procedures recommended by sealant and finish system manufacturer.

3.06 CLEANING

A. Clean EIFS surfaces and work areas of foreign material resulting from EIFS operations.

3.07 PROTECTION

A. Protect completed work from damage and soiling by subsequent work.

**END OF SECTION**

NOT FOR BIDDING

# SECTION 072500
# WEATHER BARRIERS

## PART 1 GENERAL

1.01 SECTION INCLUDES

A. Air Barriers: Materials that form a system to stop passage of air through exterior walls, joints between exterior walls and roof, and joints around frames of openings in exterior walls.

1.02 RELATED REQUIREMENTS

A. Section 030506- Underslab VaporBarrier.

B. Section 072640 - Spray Polyurethane Foam Insulating Air Barrier: Insulation and air barrier in exterior walls.

C. Section 076200 - Sheet Metal Flashing and Trim: Flashings installed in conjunction with air barriers.

D. Section 079200 - Joint Sealants: Sealing building expansion joints.

1.03 DEFINITIONS

A. Weather Barrier: Assemblies that form either water-resistive barriers, air barriers, or vapor retarders.

B. Air Barrier: Air tight barrier made of material that is relatively air impermeable but water vapor permeable, both to the degree specified, with sealed seams and with sealed joints to adjacent surfaces. Note: For the purposes of this specification, vapor impermeable air barriers are classified as vapor retarders.

C. Vapor Retarder: Air tight barrier made of material that is relatively water vapor impermeable, to the degree specified, with sealed seams and with sealed joints to adjacent surfaces.

1. Water Vapor Permeance: For purposes of conversion, 57.2 ng/(Pa s sq m) = 1 perm.

D. Water-Resistive Barrier: Water-shedding barrier made of material that is moisture-resistant, to the degree specified, intended to be installed to shed water, with sealed seams.

1.04 REFERENCE STANDARDS

A. ASTM D1970/D1970M - Standard Specification for Self-Adhering Polymer Modified Bituminous Sheet Materials Used as Steep Roofing Underlayment for Ice Dam Protection; 2013.

B. ASTM E96/E96M - Standard Test Methods for Water Vapor Transmission of Materials; 2014.

1.05 SUBMITTALS

A. See Section 013000 - Administrative Requirements, for submittal procedures.

B. Product Data: Provide data on material characteristics.

C. ABAA Field Quality Control Submittals: Submit third-party reports of testing and inspection required by ABAA QAP.

D. Manufacturer's Installation Instructions: Indicate preparation, installation methods, and storage and handling criteria.

E. ABAA Manufacturer Qualification: Submit documentation of current evaluation of proposed manufacturer and materials.

F. ABAA Installer Qualification: Submit documentation of current contractor accreditation and current installer certification; keep copies of each contractor accreditation and installer

NOT FOR BIDDING

certification on site during and after installation, and present on-site documentation upon request.

1.06 QUALITY ASSURANCE

A. Air Barrier Association of America (ABAA) Quality Assurance Program (QAP); www.airbarrier.org/#sle:
   1. Installer Qualification: Use accredited contractor, certified installers, evaluated materials, and third-party field quality control audit.
   2. Manufacturer Qualification: Use evaluated materials from a single manufacturer regularly engaged in air barrier material manufacture, and use secondary materials approved in writing by primary material manufacturer.

1.07 FIELD CONDITIONS

A. Maintain temperature and humidity recommended by the materials manufacturers before, during and after installation.

**PART 2 PRODUCTS**

2.01 WEATHER BARRIER ASSEMBLIES

A. Air Barrier:
   1. On outside surface of gypsum sheathing of exterior walls where Spray Polyurethane Foam Insulating Air Barrier is not indicated, use air barrier sheet, self-adhesive type.

2.02 AIR BARRIER MATERIALS (AIR BARRIER, VAPOR PERMEABLE, AND WATER-RESISTIVE)

A. Air Barrier Sheet (Walls): ASTM D1970.
   1. Type: Self-adhered vapor permeable, water resistive air barrier consisting of a reinforced, modified polyolefin tri-laminate film surface and patented permeable adhesive technology with split-back poly-release film.
   2. Thickness: 23 mil, nominal.
   3. Water Vapor Permeance: 29 perm, maximum, when tested in accordance with ASTM E96/E96M.
   4. Air Permeance: Pass (0.02 L/s/sq m), maximum, when tested in accordance with ASTM E2178.
   5. Manufacturers:
      a. Henry Company; Blueskin VP 160: www.henry.com/sle..
      b. Substitutions: See Section 016000 - Product Requirements.

2.03 SEALANTS

A. Primers, Cleaners, and Other Sealant Materials: As recommended by sealant manufacturer, appropriate to application, and compatible with adjacent materials.

2.04 ADHESIVES

A. Mastic Adhesive : Compatible with sheet seal and substrate, thick mastic of uniform knife grade consistency .

2.05 ACCESSORIES

A. Transition Membrane: Self-adhering, smooth surfaced SBS modified bitumen membrane, nominal 40 mil thickness, width as required, to detail all rough openings, changes in material substrates, and penetrations.
   1. Blueskin SA as manufactured by Henry Company Inc

B. Sheet Membrane Transition Strip Termination Sealant:

NOT FOR BIDDING

1. BES 925 Sealant by Henry Company Inc

C. Primer: Water based liquid primer for concrete, masonry, gypsum sheathing, wood, metal, and painted substrates;
   1. Aquatac as manufactured by Henry Company Inc.

D. Thinners and Cleaners: As recommended by material manufacturer.

**PART 3 EXECUTION**

3.01 EXAMINATION

A. Verify that surfaces and conditions are ready to accept the work of this section.

3.02 PREPARATION

A. Remove projections, protruding fasteners, and loose or foreign matter that might interfere with proper installation.

B. Clean and prime substrate surfaces to receive adhesives and sealants in accordance with manufacturer's instructions.

3.03 INSTALLATION

A. Install materials in accordance with manufacturer's instructions.

B. Water-Resistive Barriers: Install continuous barrier over surfaces indicated, with sheets lapped to shed water and with sealed seams and with sealed joints to adjacent surfaces.

C. Air Barriers: Install continuous air tight barrier over surfaces indicated, with sealed seams and with sealed joints to adjacent surfaces.

D. Apply sealants and adhesives within recommended application temperature ranges. Consult manufacturer if temperature is out of this range.

E. Self-Adhered Sheets:
   1. Prepare substrate in manner recommended by sheet manufacturer; fill and tape joints in substrate and between dissimilar materials.
   2. Lap sheets shingle-fashion to shed water and seal laps air tight.
   3. Once sheets are in place, press firmly into substrate with resilient hand roller; ensure that laps are firmly adhered with no gaps or fishmouths.
   4. Use same material, or other material approved by sheet manufacturer for the purpose, to seal to adjacent construction and as flashing.
   5. At wide joints, provide extra flexible membrane allowing joint movement.

F. Openings and Penetrations in Exterior Weather Barriers:
   1. Install flashing over sills, covering entire sill frame member, extending at least 5 inches onto weather barrier and at least 6 inches up jambs; mechanically fasten stretched edges.
   2. At openings to be filled with non-flanged frames, seal weather barrier to each side of opening framing, using flashing at least 9 inches wide, covering entire depth of framing.
   3. At head of openings, install flashing under weather barrier extending at least 2 inches beyond face of jambs; seal weather barrier to flashing.
   4. At interior face of openings, seal gap between window/door frame and rough framing, using joint sealant over backer rod.
   5. Service and Other Penetrations: Form flashing around penetrating item and seal to weather barrier surface.

3.04 FIELD QUALITY CONTROL

A. See Section 014000 - Quality Requirements, for additional requirements.

B. Coordination of ABAA Tests and Inspections:

NOT FOR BIDDING

1. Provide testing and inspection required by ABAA QAP.
2. Notify ABAA in writing of schedule for air barrier work, and allow adequate time for testing and inspection.
3. Cooperate with ABAA testing agency.
4. Allow access to air barrier work areas and staging.
5. Do not cover air barrier work until tested, inspected, and accepted.

C. Do not cover installed weather barriers until required inspections have been completed.

D. Obtain approval of installation procedures by the weather barrier manufacturer based on a mock-up installed in place, prior to proceeding with remainder of installation.

3.05 PROTECTION

A. Do not leave materials exposed to weather longer than recommended by manufacturer.

**END OF SECTION**

NOT FOR BIDDING

# SECTION 072640
# SPRAY POLYURETHANE FOAM INSULATING AIR BARRIER

## PART 1 - GENERAL

1.01 SECTION INCLUDES

A. This section includes the following:
   1. Materials and installation to bridge and seal the following air leakage pathways and gaps:
      a. Connections of the walls to the roof air barrier.
      b. Connections of the walls to the foundations.
      c. Openings and penetrations of window frames.
      d. Barrier envelope systems.
      e. Door frames.
      f. Piping, conduit, duct and similar penetrations
      g. Masonry ties, screws, bolts and similar penetrations.
      h. All other air leakage pathways in the building envelope.

1.02 PRODUCTS INSTALLED BUT NOT SUPPLIED UNDER THIS SECTION

A. Sheet metal flashings to be built into masonry are furnished under Section 076200.

1.03 RELATED SECTIONS

A. Section 042000 - Unit Masonry:
   1. Masonry backup walls
   2. Masonry veneer cavity walls.

B. Section 072100 - Building Insulation.

C. Section 079200 - Joint Sealants: Joint sealant materials and installation.

D. Section 081113- Door frames

E. Section 084313 Aluminum storefronts and entrances

1.04 PERFORMANCE REQUIREMENTS

A. Provide air/vapor barrier system constructed to perform as follows:
   1. A continuous air/vapor barrier system.
   2. Building thermal insulation.

B. System shall accommodate movements of building materials by providing expansion and control joints as required, with accessory air seal materials at such locations, changes in substrate and perimeter conditions.

C. Maximum Permissible Air Leakage Rates cfm/sf @ 0.3" w.g. (l/s.m2 @ 75 Pa)

1.05 SUBMITTALS

A. Provide submittals in accordance with Section 013000.

B. Submit shop drawings showing locations and extent of air/vapor barrier and details of all typical conditions, intersections with other envelope systems and materials, membrane flashings and counter-flashings, and details showing how gaps in the construction will be bridged, how inside and outside corners are negotiated and how miscellaneous penetrations such as conduits, pipes electric boxes and the like are sealed.

C. Submit manufacturer's product data sheets for each type of material, including manufacturer's printed instructions for evaluating, preparing, and treating substrate, temperature and other limitations of installation conditions, technical data, and tested physical and performance properties.

NOT FOR BIDDING

D. Submit manufacturer's installation instructions.

E. Provide evidence of testing by an accredited laboratory confirming material has been tested and conforms to the requirements of ASTM E2178, Standard for Air Barrier Materials.

F. Certification by air/vapor barrier manufacturer that products supplied comply with local regulations controlling use of volatile organic compounds (VOCs).

G. Certification of compatibility by air/vapor barrier manufacturer, listing all materials on the project that it connects to or that come in contact with it.

H. Submit two samples, 12 by 12 inch (300 by 300 mm) minimum size, of each air/vapor barrier material required for Project.

I. Submit test results of air permeability testing of primary air barrier material (ASTM E 2178-01).

J. Provide evidence of testing by an accredited laboratory confirming material has been tested and conforms to the requirements of ASTM E2357, Standard Test Method for Determining Air Leakage of Air Barrier Assemblies: Pass.

K. Provide evidence of testing by an accredited laboratory confirming material has been tested and conforms to the requirements of NFPA 285: Pass.

L. Quality Assurance Program: Submit evidence of current accreditation and certification under the Air Barrier Association of America's (ABAA) Quality Assurance Program. Submit accreditation number of manufacturer and certification number of installers at time of submittal.

1.06 QUALITY ASSURANCE

A. Installer Qualifications:

1. Each worker who is installing air barriers must be either a Certified Applicator or an installer who is registered with ABAA
2. Each Lead Certified Applicator can supervise a maximum of five registered installers. The Certified Applicator shall be thoroughly trained and experienced in the installation of air barriers of the types being applied. Lead Certified Applicators shall perform or directly supervise all air/vapor barrier work on the project.
3. Installers shall also be certified by ABAA/NECA (National Energy Conservation Association) and PSDI (Professional Skills Development Institute for energy conservation) and SPFA (Spray Polyurethane Foam Alliance as foam mechanics). Installers shall have their photo-identification certification cards in their possession and available on the project site, for inspection upon request.
4. Provide products that comply with all state and local regulations controlling use of volatile organic compounds (VOCs).
5. Preconstruction Meeting: Convene one week prior to commencing Work of this section, in accordance with Section 01 20 00 - Project Meetings.
6. Field-Constructed Mock-Ups: Prior to installation of air/vapor barrier, apply air/vapor barrier as follows to verify details under shop drawing submittals and to demonstrate tie-ins with adjoining construction, and other termination conditions, as well as qualities of materials and execution:
   a. Apply air/vapor barrier in field-constructed mock-ups of assemblies specified in Section 042000.
7. Cooperate and coordinate with the Owner's inspection and testing agency if required. Do not cover any installed air and vapor barrier unless it has been inspected, tested and approved per requirements.

NOT FOR BIDDING

8. Protect people and materials from over-spray and contact with chemicals and gases.

1.07 FIELD QUALITY ASSURANCE

A. Implement the ABAA Quality Assurance Program requirements. Cooperate with ABAA inspectors and independent testing and inspection agencies engaged by the Owner. Do not cover air barrier until it has been inspected, tested, and accepted.

1.08 MOCKUP

A. Provide spray polyurethane foam insulating air barrier as part of exterior wall assembly mockup. See Section 042000 and Drawings for requirements.

B. See Section 014000 - Quality Requirements for additional requirements.

C. Locate where directed.

D. Mock-up may not remain as part of the Work.

1.09 DELIVERY, STORAGE, AND HANDLING

A. Deliver materials to Project site in original packages with seals unbroken, labeled with manufacturer's name, product, date of manufacture, expiration date, and directions for storage.

B. Store materials in their original undamaged packages in a clean, dry, protected location and within temperature range required by air/vapor barrier manufacturer. Protect stored materials from direct sunlight.

C. Avoid spillage. Immediately notify Owner, Architect if spillage occurs and start clean up procedures.

D. Clean spills and leave area as it was prior to spill.

1.10 WASTE MANAGEMENT AND DISPOSAL

A. Place materials defined as hazardous or toxic waste in designated containers.

B. Ensure emptied containers are sealed and stored safely for disposal.

1.11 PROJECT CONDITIONS

A. Environmental Conditions: Apply air/vapor barrier within range of ambient and substrate temperatures recommended by air/vapor barrier manufacturer. Do not apply air/vapor barrier to a damp or wet substrate, unless the manufacturer specifically permits that for the product.
   1. Do not apply air/vapor barrier in snow, rain, fog, or mist.
   2. Do not apply air/vapor barrier when the temperature of substrate surfaces and surrounding air temperatures are below those recommended by the manufacturer.
   3. The product shall not be installed after the expiry date printed on the label of each container. The product has a shelf life of 6 months from the date of manufacture.

1.12 WARRANTY

A. System Warranty: Provide the manufacturer's three year system warranty, including the primary air/vapor barrier and installed accessory sealant and membrane materials which fail to achieve air tight and watertight seal, exhibit loss of adhesion or cohesion, or do not cure.

**PART 2 - PRODUCTS**

2.01 MATERIALS & MANUFACTURERS

A. Sprayed polyurethane foam material, when tested, shall meet the requirements of ULC S705.1-01 Standard for Thermal Insulation-Spray Applied Rigid Polyurethane Foam, Medium Density, Material- Specification.

NOT FOR BIDDING

B. A copy of an Evaluation Report (such as the CCMC Evaluation Report) or copies of the test reports from an accredited testing laboratory, for each physical property, indicating that the product meets the requirements of ULC S705.1-01 shall be made available upon request.

C. Material containers shall be labeled with the Evaluation Report number of the evaluation agency.

D. Design R-value as indicated in test report; minimum R6.9/inch.

E. Density as indicated in test report: minimum 1.7 pounds per cubic foot.

F. Smoke development as indicated in test report; less than 500 when tested under ULC S102.

G. Products that meet the preceding requirements:
   1. Basis-of-design product: Walltite closed cell spray foam polyurethane air/vapor barrier as manufactured by BASF (215-966-1168).

H. Other Manufacturers: Provide either the product identified as "Basis of Design" or an equivalent product of another manufacturer with approved submittal meeting the design criteria:
   1. Icynene: www.icynene.com

I. Substitutions: See Section 016000 - Product Requirements.
   1. For any product not identified as "Basis of Design", submit information as specified for substitutions.

2.02 AUXILIARY MATERIALS

A. Furnish auxiliary materials recommended by air/vapor barrier manufacturer for intended use and compatible with the air/vapor barrier.

B. Transition Membrane: Self-adhering, smooth surfaced SBS modified bitumen membrane, nominal 40 mil thickness, width as required, to detail all rough openings, changes in material substrates, and penetrations.
   1. Blueskin SA as manufactured by Henry Company Inc
   2. Butyl-based peel and stick membrane: Transition between air/vapor barrier membrane and TPO or EPDM membranes.
      a. Blueskin SA as manufactured by Henry Company Inc.
   3. Primer: Water based liquid primer for concrete, masonry, gypsum sheathing, wood, metal, and painted substrates;
      a. Aquatac as manufactured by Henry Company Inc.
   4. Mastic, Adhesives, and Tape: Liquid mastic and adhesives, and adhesive tapes approved by foamed in place air/vapor barrier manufacturer.
   5. Sheet Membrane Transition Strip Termination Sealant:
      a. BES 925 Sealant by Henry Company Inc.
   6. Sheet Membrane Sheet Membrane Air Barrier Perimeter Seal to Windows, Doors: Low modulus silicone sheet; provide manufacturer's standard system consisting of precured low-modulus silicone extrusion, in sizes to fit widths indicated, combined with a neutral-curing low modulus silicone sealant for bonding extrusions to substrates.
      a. Pecora Sil-Span.
      b. Dow 1-2-3 or equal.
   7. Provide sealants in accordance with Section 079200 - Joint Sealants. Comply with ASTM C920 and ASTM C920 classifications for type, grade, class, and uses.
      a. Silicone Sealant: natural cure, low modulus, to seal sheet membrane flashing to polyethylene face of sheet rubberized-asphalt barrier and to seal between and to non-bituminous sheet systems.

NOT FOR BIDDING

1) Acceptable materials:
   (a) Dow 790
   (b) Pecora 864

b. SPF (Sprayed Polyurethane Foam) Sealant: Provide one- or two-component, foamed-in-place, polyurethane foam sealant with the following characteristics:
   1) Density: 1.5 to 2.0 PCF.
   2) Flame Spread (ASTM E162): 25 or less.
   3) Initial R-Value (at 1 inch): Not less than 7.
   4) Acceptable materials:
      (a) Zerodraft Foam Sealant.
      (b) Zerodraft Insulating Air Sealant
      Zerodraft (Division of Canam Building Envelope Specialists Inc.), 125 Traders Blvd. E., Unit # 4, Mississauga, ON, L4Z 2H3 Tel. 1-877-27[illegible]-2626

c. Substrate Cleaner: Non-corrosive compatible with adjacent materials.

C. Intumescent Coating
   1. International Fireproof Technology Inc. DC-315: water-based, intumescent paint, conforming to the following:
      a. Product shall pass full scale fire resistance test with spray foam insulating air barrier in accordance with NFPA 286: 24 wet mils (thermal barrier).
      b. Finish: flat, grey color
      c. VOC Content: 47 g/L
      d. Volume Solids: 67%
      e. Flash Point: none
      f. Mechanism of cure: coalescence
      g. Reducer/cleaner: water

2.03 EQUIPMENT

A. The equipment used to spray the polyurethane foam material shall be in accordance with ULC S705.2-02 and the equipment manufacturer's recommendations for specific type of application.

B. Equipment settings are to be recorded on the Daily Work Record as required by the ULC S705.2-02 Installation standard.

C. Each proportioner unit to supply only one spray gun.

**PART 3 EXECUTION**

3.01 EXAMINATION

A. Examine substrates, areas, and conditions under which air/vapor barrier systems will be applied, with Installer present, for compliance with requirements. Verify that surfaces and conditions are suitable prior to commencing work of this section. Do not proceed with installation until unsatisfactory conditions have been corrected.

B. Ensure that:
   1. surfaces are sound, dry, even, and free of oil, grease, dirt, excess mortar or other contaminants
   2. concrete surfaces are cured and dry, smooth without large voids, spalled areas or sharp protrusions.
   3. masonry joints are flush and completely filled with mortar, and all excess mortar sitting on masonry ties has been removed.
   4. Verify substrate is visibly dry and free of moisture. Test for capillary moisture by plastic sheet method according to ASTM D4263.

NOT FOR BIDDING

5. Notify Architect in writing of anticipated problems using air/vapor barrier over substrate.

3.02 SURFACE PREPARATION

A. Clean, prepare, and treat substrate according to manufacturer's written instructions. Provide clean, dust-free, and dry substrate for air/vapor barrier application.

B. Prime ICBP metal substrates with conditioning primer when installing modified asphalt membrane transition membranes.

C. Prepare, treat, and seal vertical and horizontal surfaces at terminations and penetrations through air/vapor barrier and at protrusions according to air/vapor barrier manufacturer's written instructions.
   1. Verify that surfaces and conditions are suitable to accept work as outlined in this section.
   2. Commencement of work outlined in this section shall be deemed as acceptance of existing work and conditions.
   3. Examine joints before sealing to ensure configurations, surfaces and widths are suitable for spray polyurethane foam. Report in writing all defects stating the locations of joints deemed unacceptable for the application of the spray polyurethane foam.

3.03 PREPARATION

A. Protection:
   1. Mask and cover adjacent areas to protect from over spray.
   2. Ensure any required foam stop or back up material are in place to prevent over spray and achieve complete seal.
   3. Seal off existing ventilation equipment. Install temporary ducting and fans to ensure exhaust fumes. Provide for make up air.
   4. Erect barriers, isolate area and post warning signs to advise non-protected personnel to avoid the spray area.
   5. Surface Preparation
      a. Surfaces to receive foam insulation shall be clean, dry and properly fastened to ensure adhesion of the polyurethane foam to the substrate.
      b. Ensure that all work by other trades that may penetrate through the air barrier system is in place and complete.
      c. Ensure that surface preparation and any primers required conform to the manufacturer's instructions.
      d. Prepare surfaces by brushing, scrubbing. Scraping, or grinding to remove loose mortar, dust, oil, grease, oxidation, mill scale and other contaminants which will affect adhesion and integrity of the spray polyurethane foam. Wipe down metal surfaces to remove release agents or other non-compatible coatings, using clean sponges or rags soaked in a solvent compatible with the spray polyurethane foam. Ensure surfaces are dry before proceeding.
      e. Install transition membranes around and into all rough openings, to all materials penetrating the exterior wall to all applicable surfaces and ensure proper adhesion of the transition membranes to the substrate, capable of having spray polyurethane foam insulation.
      f. Install counter-flashings:
         1) Metal: Mechanically fasten metal counter-flashings with screws at 8” (200 mm) o.c.
         2) Membrane: Cut into and uncover only 3” of siliconized release paper along one edge of the counter-flashing membrane. Adhere membrane flashing to the pre-primed substrate a minimum of 3” and roll firmly in place.

NOT FOR BIDDING

g. Ensure veneer anchors are in place.

3.04 APPLICATION

A. Spray-application of polyurethane foam shall be installed in accordance with ULC S705.2-02 and the manufacturer's instructions.

B. Apply only when surfaces and environmental conditions are within limits prescribed by the material manufacturer and the ULC S705.2 Installation standard.

C. Apply in consecutive passes as recommended by manufacturer to thickness as indicated on drawings. Passes shall be not less than ½ inch and not greater than 2 inches.

D. Do not install spray polyurethane foam within 3 inches of heat emitting devices such as light fixtures and chimneys.

E. Finished surface of foam insulation to be free of voids and embedded foreign objects.

F. Remove masking materials and over spray from adjacent areas immediately after foam surface has hardened. Ensure cleaning methods do not damage work performed by other sections.

G. Trim, as required, any excess thickness that would interfere with the application of cladding/covering system by other trades.

H. Clean and restore surfaces soiled or damaged by work of this section. Consult with section of work soiled before cleaning to ensure methods used will not damage the work.

I. Do not permit adjacent work to be damaged by work of this section. Damage to work of this section caused by other sections shall be repaired by this section at the expense of the subcontractor causing the damage.

J. Complete connections to other components or repair any gaps, holes or other damage using material which conforms to ULC S710.1 Polyurethane Sealant Foam - One Component - Material or ULC S711.1 Polyurethane Sealant Foam - Two Components - Material and shall be installed in accordance with ULC S710.2 Polyurethane Sealant Foam - One component - Installation or ULC S711.2 Polyurethane Sealant Foam - Two Component - Installation, whichever is appropriate.

K. Where insulation is not protected with masonry veneer, install intumescent paint to required wet or dry mil thickness or coverage rate in accordance with manufacturer's instructions, by brush, roller, conventional or airless spray.

3.05 TOLERANCES

A. Maximum variation from indicated thickness: minus (-) ¼ inch; plus (+) ½ inch.

3.06 PROTECTION

A. Cover the spray polyurethane foam with a thermal barrier when installed on the interior of the building.

**END OF SECTION**

NOT FOR BIDDING

# SECTION 074213
# METAL WALL PANELS

## PART 1 - GENERAL

1.01 SECTION INCLUDES

A. Concealed and exposed fastener metal wall panels as part of the assembly described below.
   1. Metal Wall Panels over Masonry Wall System: Single-skin exposed fastener metal wall panels applied as exterior cladding over a masonry wall and spray-applied insulation. Metal wall panel installation specified in this Section includes secondary metal subgirt framing for panel attachment.
   2. Single-skin concealed fastener metal wall panels applied as exterior cladding over a framed wall and spray-applied insulation.

1.02 RELATED REQUIREMENTS

A. Division 04 Section "Unit Masonry"

B. Division 07 Section "Air Barriers": applied air, moisture, and water vapor control membrane.

C. Division 07 Section "Sheet Metal Flashing and Trim" for sheet metal copings, flashings, reglets and roof drainage items.

D. Division 07 Section "Joint Sealants" for field-applied joint sealants.

1.03 REFERENCES

A. American Architectural Manufacturer's Association (AAMA):
   1. AAMA 621 - Voluntary Specification for High Performance Organic Coatings on Coil Coated Architectural Hot Dipped Galvanized (HDG) and Zinc-Aluminum Coated Steel Substrates.

B. ASTM International (ASTM):
   1. ASTM A 653/A 653M - Specification for Steel Sheet, Zinc-Coated (Galvanized) or Zinc-Iron Alloy-Coated (Galvannealed) by the Hot-Dip Process.
   2. ASTM C 754 - Specification for Installation of Steel Framing Members to Receive Screw Attached Gypsum Panel Products.
   3. ASTM C 920 - Specification for Elastomeric Joint Sealants.
   4. ASTM C 1007 - Standard Specification for Installation of Load Bearing (Transverse and Axial) Steel Studs and Related Accessories.
   5. ASTM E 72 - Standard Test Methods of Conducting Strength Tests of Panels for Building Construction.

C. Sheet Metal and Air Conditioning Contractors National Association, Inc. (SMACNA): Architectural Sheet Metal Manual.

1.04 PERFORMANCE REQUIREMENTS

A. General: Provide metal wall panel assemblies meeting performance requirements as determined by application of specified tests by a qualified testing agency on manufacturer's standard assemblies.

B. Structural Performance: Provide metal wall panel assemblies capable of withstanding the effects of indicated loads and stresses within limits and under conditions indicated, per ASTM E 72:
   1. Wind Loads: Determine loads based on uniform pressure, importance factor, exposure category, and basic wind speed indicated on drawings.

NOT FOR BIDDING

2. Limits of Deflection: Metal wall panel assembly shall withstand scheduled wind pressure with the following allowable deflection:
   a. Maximum allowable deflection limited to L/180 deflection of panel perimeter normal to plane of wall with no evidence of failure.
3. Secondary Metal Framing: Design secondary metal framing for metal wall panel assembly according to AISI's "Standard for Cold-Formed Steel Framing - General Provisions."
4. Side Joint Disengagement: Panels must be designed and tested under Negative load per ASTM E 72.

C. Thermal Movements: Allow for thermal movements from variations in both ambient and internal temperatures. Accommodate movement of support structure caused by thermal expansion and contraction.

1.05 QUALITY ASSURANCE

A. Manufacturer/Source: Provide metal wall panel and panel accessories from a single manufacturer.

B. Manufacturer Qualifications: Approved manufacturer listed in this Section with minimum 10 years experience in manufacture of similar products in successful use in similar applications.
1. Approval of Comparable Products: Submit the following in accordance with project substitution requirements, within time allowed for substitution review:
   a. Product data, including certified independent test data indicating compliance with requirements.
   b. Sample submittal from similar project.
   c. Project references: Minimum of 5 installations not less than 5 years old, with Owner and Architect contact information.
   d. Sample warranty.
2. Substitutions following award of contract are not allowed except as stipulated in Division 01 General Requirements.
3. Approved manufacturers must meet separate requirements of Submittals Article.

C. Installer Qualifications: Experienced Installer with minimum of 5 years experience with successfully completed projects of a similar nature and scope.

1.06 ADMINISTRATIVE REQUIREMENTS

A. Preinstallation Meeting: Conduct preinstallation meeting at site attended by Construction Manager, Owner, Architect, manufacturer's representative, and other trade contractors.
1. Coordinate building framing in relation to metal wall panel assembly.
2. Coordinate installation of building air and water barrier behind metal wall panel assembly.
3. Coordinate window, door and louver, and other openings and penetrations of metal wall panel assembly.

1.07 ACTION SUBMITTALS

A. Product Data: Manufacturer’s data sheets, for specified products.
1. Include data indicating compliance with performance requirements, including load span tables tested for side joint disengagement under negative loads per ASTM E 72.

B. Shop Drawings: Provide shop drawings prepared by manufacturer or manufacturer's authorized Installer. Include full elevations showing openings and penetrations. Include details of each condition of installation and attachment. Provide details at a minimum scale 1-1/2-inch per foot of all required trim and extrusions needed for a complete installation.

NOT FOR BIDDING

1. Indicate points of supporting structure that must coordinate with metal wall panel assembly installation.

C. Samples for Initial Selection: For each product specified, provide representative color charts of manufacturer's full range of colors.

D. Samples for Verification: Provide 12-inch (300 mm) section of panel(s) showing finishes. Provide 12-inch (300 mm) long pieces of trim pieces and other exposed components.

1.08 INFORMATIONAL SUBMITTALS

A. Product Test Reports: Indicating compliance of products with requirements, from a qualified independent testing agency.

B. Qualification Information: For Installer firm.

C. Manufacturer's warranty: Submit sample warranty.

1.09 CLOSEOUT SUBMITTALS

A. Maintenance data.

1.10 MOCK-UP

A. Mock-Up: Provide metal panels, trim, copings, flashings, and supports for installation in mock-up of exterior wall.

B. See Section 014000 - Quality Requirements for additional information.

C. See Section 042000 - Unit Masonry and Drawings for requirements.
   1. Approved mock-up will become standard for appearance and workmanship.
   2. Mock-up may not remain as part of the completed work.
   3. Remove mock-up not incorporated into the work and dispose of debris.

1.11 DELIVERY, STORAGE, AND HANDLING

A. Protect metal wall panel products during shipping, handling, and storage to prevent staining, denting, deterioration of components or other damage.
   1. Deliver, unload, store, and erect metal wall panel products and accessory items without misshaping panels or exposing panels to surface damage from weather or construction operations.

1.12 WARRANTY

A. Special Manufacturer’s Warranty: On manufacturer’s standard form, in which manufacturer agrees to repair or replace components of metal wall panel assemblies that fail in materials and workmanship within two years from date of Substantial Completion.

B. Special Panel Finish Warranty: On manufacturer’s standard form, in which manufacturer agrees to repair or replace metal wall panels that evidence deterioration of finish within the following periods from the date of substantial completion:
   1. Warranty Period: 20 years.

**PART 2 - PRODUCTS**

2.01 MANUFACTURERS

A. Basis of Design:
   1. CENTRIA Architectural Systems; Moon Township, PA 15108; www.CENTRIA.com.
      a. Metal Wall Panels Type 1: Intercept Series

B. Other Manufacturers: Products meeting the performance and appearance must be submitted for approval prior to bidding. The following may be considered pending color and sample pre-approval, including accessories.

NOT FOR BIDDING

1. ATAS International, Inc.:6612 Snowdrift Road, Allentown, PA 18106. www.atas.com.
2. MBCI.

2.02 METAL WALL PANEL MATERIALS

A. Metallic-Coated Steel Face Sheet: Coil-coated, ASTM A 755/A 755M.
1. Aluminum-zinc alloy-coated Steel Sheet: ASTM A 792/A 792 M, Class AZ50 Grade 50 (Class AZM150, Grade 275), structural steel quality.
2. Face Sheet: Minimum 0.030 inch/22 gage (0.76 mm) nominal uncoated thickness.
3. Surface: Smooth.

2.03 CONCEALED FASTENER METAL WALL PANELS

A. Metal Wall Panels, General: Factory-formed, concealed fastener panels with interconnecting side joints, fastened to supports with concealed fasteners, with factory-applied sealant in side laps when required to meet performance requirements.

B. Horizontal Joints: Horizontal Joints with drip edge and sloped drain shelf to provide positive water shed away from Panel Joinery.

C. Metal Wall Panels Type 1: Closed-joint back-ventilated Rainscreen Panel with ¾"(19mm) wide reveals betweeen panels with independent panel attachment.
1. Basis of Design Product: CENTRIA, Intercept Entyre Panel System
2. Installation Sequence:
a. Bottom up
3. Installation Patterns:
a. Vertical and/or horizontal orientation
b. Running bond—vertically and horizontally
4. Panel Reveal Width:
a. 3/4" [19mm] Standard
5. Panel Depth:
a. 1 3/8" [35 mm] Standard

2.04 METAL WALL PANEL ACCESSORIES

A. Metal Wall Panel Accessories, General: Provide complete metal wall panel assembly incorporating trim, copings, fasciae, parapet caps, soffits, sills, inside and outside corners, and miscellaneous flashing. Provide manufacturer's factory-formed shims, flashings, gaskets, lap strips, closure strips, and caps for a complete installation. Fabricate accessories in accordance with SMACNA Manual.

B. Interior Corners: Structurally-bonded horizontal interior and exterior trimless corners matching metal wall panel material, profile, and factory-applied finish, fabricated and finished by metal wall panel manufacturer.
1. Welded, riveted, fastened, or field- fabricated corners do not meet the requirements of this specification.
2. Basis of Design: CENTRIA, MicroSeam Corners.

C. Formed Flashing and Trim: Match material, thickness, and color of metal wall panels.

D. Sealants: Type recommended by metal wall panel manufacturer for application, meeting requirements of Division 07 Section "Joint Sealants."

E. Flashing Tape: 4-inch wide self-adhering butyl flashing tape.

F. Fasteners: Self-tapping screws and other acceptable fasteners recommended by panel manufacturer. Where exposed fasteners cannot be avoided, supply corrosion-resistant fasteners with heads matching color of metal wall panels by means factory-applied coating.

NOT FOR BIDDING

2.05 SECONDARY METAL SUBGIRT FRAMING

A. Miscellaneous Framing Components, General: Cold-formed metallic-coated steel sheet, ASTM A 653/A 653M, G90 (Z180).
   1. Hat Channels: 0.053 inch/16 ga. (1.34 mm) minimum.
   2. Sill Channels: 0.053 inch/16 ga. (1.34 mm) minimum.

2.06 METAL WALL PANEL FINISHES

A. Exposed Coil-Coated Finish System:
   1. Fluoropolymer Two-Coat System: 0.8-mil primer with 0.8-mil 70 percent PVDF fluoropolymer color coat, AAMA 621.
      a. Basis of Design: CENTRIA Duragard.

B. Color:
   1. Exterior Surface: As selected by Architect from manufacturer's full color range, including Allura series.
   2. Interior Surface: Manufacturer's standard primer color.

**PART 3 - EXECUTION**

3.01 EXAMINATION

A. Examine metal wall panel substrate with Installer present. Inspect for erection tolerances and other conditions that would adversely affect installation of metal wall panels.

B. Wall Substrate: Confirm that wall substrate is within tolerances acceptable to metal wall panel system manufacturer.
   1. Maximum substrate and framing deviations from flat plane acceptable:
      a. 1/4-inch in 20 feet vertically or horizontally.
      b. 1/2-inch across building elevation.
      c. 1/8-inch in 5 feet.

C. Openings: Verify that window, door, louver and other penetrations match layout on shop drawings.

D. Air/Moisture Barriers: Confirm that work has been completed, inspected, and tested as required.

E. Correct out-of-tolerance work and other deficient conditions prior to proceeding with metal wall panel system installation.

3.02 SECONDARY FRAMING INSTALLATION

A. Secondary Metal Subgirt Framing: Install secondary metal framing components to tolerances indicated as shown on approved shop drawings. Install secondary metal framing and other metal panel supports per ASTM C 1007 and metal wall panel manufacturer's recommendations.

3.03 METAL WALL PANEL INSTALLATION

A. General: Install metal wall panels in accordance with approved shop drawings and manufacturer's recommendations. Install metal wall panels in orientation, sizes, and locations indicated. Anchor metal wall panels and other components securely in place. Provide for thermal and structural movement

B. Attach panels to metal framing using recommended clips, screws, fasteners, sealants, and adhesives indicated on approved shop drawings.
   1. Fasteners for Steel Wall Panels: Stainless-steel for exterior locations and locations exposed to moisture; carbon steel for interior use only.

NOT FOR BIDDING

2. Fasten metal wall panels to supports with fasteners and spacing recommended by manufacturer.
3. Provide weatherproof escutcheons for pipe and conduit penetrating exterior walls.
4. Dissimilar Materials: Where elements of metal wall panel system will come into contact with dissimilar materials, treat faces and edges in contact with dissimilar materials as recommended by manufacturer.

C. Joint Sealers: Install joint sealants where indicated on approved shop drawings.

3.04 ACCESSORY INSTALLATION

A. General: Install metal wall panel accessories with positive anchorage to building and provide for thermal expansion. Coordinate installation with flashings and other components.
1. Install related flashings and sheet metal trim per requirements of Division 07 Section "Sheet Metal Flashing and Trim."
2. Install components required for a complete metal wall panel assembly, including trim, copings, corners, lap strips, flashings, sealants, fillers, closure strips, and similar items.
3. Comply with performance requirements and manufacturer's written installation instructions.
4. Provide concealed fasteners except where noted on approved shop drawings.
5. Set units true to line and level as indicated.

3.05 FIELD QUALITY CONTROL

A. Manufacturer's Field Service: Engage a service representative authorized by metal wall panel manufacturer to inspect completed installation. Submit written report.

B. Correct deficiencies noted in manufacturer's report.

3.06 CLEANING AND PROTECTION

A. Remove temporary protective films. Clean finished surfaces as recommended by metal wall panel manufacturer. Clean weep holes and drainage channels of obstructions, dirt, and sealant. Maintain in a clean condition during construction.

B. Replace damaged panels and accessories that cannot be repaired by finish touch-up or minor repair.

**END OF SECTION**

NOT FOR BIDDING

# SECTION 075300
# ELASTOMERIC MEMBRANE ROOFING

## PART 1 GENERAL

1.01 SECTION INCLUDES

A. Elastomeric roofing membrane, adhered conventional application.

B. Insulation, flat and tapered.

C. Flashings.

D. Roofing stack boots, roofing expansion joints, and walkway pads.

1.02 RELATED REQUIREMENTS

A. Section 053100 - Steel Decking: Product requirements for acoustical insulation for deck flutes, for placement by this section.

B. Section 061000 - Rough Carpentry: Wood nailers and curbs.

C. Section 076200 - Sheet Metal Flashing and Trim: Counterflashings, reglets.

D. Section 077100 - Roof Specialties: Copings, fascia, prefabricated roofing expansion joint flashing; to be included in roofing system warranty.

E. Section 077200 - Roof Accessories: Roof-mounted units; prefabricated curbs.

F. Section 221006 - Plumbing Piping Specialties: Roof drains.

G. Section 264113 - Lightning Protection for Structures.

1.03 REFERENCE STANDARDS

A. ASTM C1289 - Standard Specification for Faced Rigid Cellular Polyisocyanurate Thermal Insulation Board; 2016.

B. ASTM D4637/D4637M - Standard Specification for EPDM Sheet Used in Single-Ply Roof Membrane; 2013.

C. FM DS 1-28 - Wind Design; 2007.

D. NRCA (RM) - The NRCA Roofing Manual; 2017.

E. UL (DIR) - Online Certifications Directory; current listings at database.ul.com.

1.04 ADMINISTRATIVE REQUIREMENTS

A. Preinstallation Meeting: Convene a preinstallation meeting one week before starting work of this section; require attendance by all affected installers; review preparation and installation procedures and coordination and scheduling necessary for related work.

1.05 SUBMITTALS

A. See Section 013000 - Administrative Requirements, for submittal procedures.

B. Product Data: Provide data indicating membrane materials, flashing materials, insulation, and fasteners.

C. Shop Drawings: Indicate joint or termination detail conditions, conditions of interface with other materials, setting plan for tapered insulation, and paver layout.

D. Manufacturer's Installation Instructions: Indicate membrane seaming precautions and perimeter conditions requiring special attention.

E. Manufacturer's Field Reports: Indicate procedures followed, ambient temperatures, humidity, and supplementary instructions given.

NOT FOR BIDDING

F. Installer's Qualification Statement.

G. Warranty: Submit manufacturer warranty and ensure forms have been completed in Owner's name and registered with manufacturer.

1.06 QUALITY ASSURANCE

A. Manufacturer Qualifications: Company specializing in manufacturing the products specified in this section with minimum five years of documented experience.

B. Installer Qualifications: Company specializing in performing the work of this section with minimum five years documented experience, and approved by manufacturer.

1.07 DELIVERY, STORAGE, AND HANDLING

A. Deliver materials in manufacturer's original containers, dry and undamaged, with seals and labels intact.

B. Store materials in weather protected environment, clear of ground and moisture.

C. Ensure storage and staging of materials does not exceed static and dynamic load-bearing capacities of roof decking.

D. Protect foam insulation from direct exposure to sunlight.

1.08 FIELD CONDITIONS

A. Do not apply roofing membrane during unsuitable weather.

B. Do not apply roofing membrane when ambient temperature is below 40 degrees F or above 90 degrees F.

C. Do not apply roofing membrane to damp or frozen deck surface or when precipitation is expected or occurring.

D. Do not expose materials vulnerable to water or sun damage in quantities greater than can be weatherproofed the same day.

E. Schedule applications so that no partially completed sections of roof are left exposed at end of workday.

1.09 WARRANTY

A. See Section 017800 - Closeout Submittals, for additional warranty requirements.

B. Special Project Warranty: Submit roofing Installer's warranty, on warranty form signed by Installer, covering Work of this Section, including all components of membrane roofing system such as roofing membrane, base flashing, roof insulation, and walkway products, for the following warranty period:

1. Warranty Period: Two years from date of Substantial Completion.

C. Manufacturer's Warranty: Manufacturer's Warranty standard form, without monetary limitation, in which manufacturer agrees to repair or replace components of membrane roofing system that fail in materials or workmanship within specified warranty period. Failure includes roof leaks.

1. Warranty Period: 25 years from date of Substantial Completion.
2. Coverage: Material and labor.
3. Include edge metal in Roofing System Warranty. See Section 077100.

**PART 2 PRODUCTS**

2.01 MANUFACTURERS

A. EPDM Membrane Materials:

NOT FOR BIDDING

1. Carlisle Roofing Systems, Inc: www.carlisle-syntec.com.
2. Firestone Building Products, LLC: www.firestonebpco.com.
3. Versico, a division of Carlisle Construction Materials Inc: www.versico.com/sle.
4. Substitutions: See Section 016000 - Product Requirements.

2.02 ROOFING

A. Elastomeric Membrane Roofing: One ply membrane, fully adhered, over insulation and coverboard.

B. Roofing Assembly Requirements:
1. Roof Covering External Fire Resistance Classification: UL (DIR) certified Class A.
2. Factory Mutual Classification: Class 1 and windstorm resistance of 1-90, in accordance with FM DS 1-28.

C. Acceptable Insulation Types - Constant Thickness Application:
1. Minimum 2 layers of polyisocyanurate board.

D. Acceptable Insulation Types - Tapered Application:
1. Uniform thickness polyisocyanurate board covered with tapered polyisocyanurate board.

2.03 ROOFING MEMBRANE AND ASSOCIATED MATERIALS

A. Membrane: Ethylene-propylene-diene-terpolymer (EPDM), non-reinforced; complying with minimum properties of ASTM D4637/D4637M.
1. Thickness: 0.060 inch (60 mil).
2. Sheet Width: 120 inch, minimum; factory fabricate into largest sheets possible.
3. Solar Reflectance: 0.75, minimum, initial, and 0.64, minimum, 3-year, certified by Cool Roof Rating Council.
4. Thermal Emittance: 0.84, minimum, initial, and 0.87, minimum, 3-year, certified by Cool Roof Rating Council.
5. Color: White.

B. Seaming Materials: Standard synthetic-rubber polymer primer and 6-inch wide minimum, butyl splice tape with release film.

C. Membrane Fasteners: As recommended by and approved by membrane manufacturer.

D. Flexible Flashing Material: Same material as membrane; complying with the following:
1. Thickness: 60 mil.
2. Tensile Strength: 1,200 psi.
3. Elasticity: 50 percent with full recovery without set.
4. Color: White.

2.04 COVER BOARD

A. Fiberglass Mat Faced Gypsum Roof Board:
1. Thickness: 5/8 inch.
2. Width: 4 feet.
3. Length: 8 feet.
4. Weight: 2.5 lb/sq. ft.
5. Surfacing: Fiberglass mat with non-asphaltic coating.
6. Flexural Strength, Parallel (ASTM C473): 100 lbf, minimum.
7. Flute Span (ASTM E661): 8 inches.
8. Permeance (ASTM E96): greater than 17 perms.
9. R-Value (ASTM C518): 0.67.
10. Water Absorption (ASTM C1177): Less than 10 percent of weight.

NOT FOR BIDDING

11. Compressive Strength (Applicable Sections of ASTM C472): 900 pounds per square inch.
12. Surface Water Absorption (ASTM C473): Not more than 2 grams.
13. Acceptable Products:
    a. DensDeck Prime, Georgia-Pacific Gypsum.

2.05 INSULATION

A. Polyisocyanurate Board Insulation: Rigid cellular foam, complying with ASTM C1289, Type II, Class 1, cellulose felt or glass fiber mat both faces; Grade 2 and with the following characteristics:
    1. Compressive Strength: 20 psi
    2. Board Size: 48 by 96 inch.
    3. Board Thickness (base layer): 1.7 inch minimum.
    4. Flat roof insulation thickness: 5" total thickness, two-layers.
    5. Tapered Board insulation: Slope as indicated; minimum thickness 5 inch; fabricate of fewest layers possible.
        a. Minimum slope: 1/4 inch per foot.
        b. Sumps at drains: 4'-0" square; 1/2" per foot slope.
    6. Board Edges: Square.

2.06 ACCESSORIES

A. Prefabricated Roofing Expansion Joint Flashing: Sheet butyl over closed-cell foam backing seamed to stainless steel flanges.

B. Stack Boots: Prefabricated flexible boot and collar for pipe stacks through membrane; same material as membrane.

C. Insulation Joint Tape: Glass fiber reinforced type as recommended by insulation manufacturer, compatible with roofing materials; 6 inches wide; self adhering.

D. Thinners and Cleaners: As recommended by adhesive manufacturer, compatible with membrane.

E. Membrane Adhesive: As recommended by membrane manufacturer, and:
    1. Provide low-VOC, solvent-based EPDM bonding adhesive that complies with Ozone Transport Commission (OTC) Model Rule, Single Ply Roofing Adhesives; www.otcair.org.

F. Membrane Adhesive Primer: As recommended by membrane manufacturer, and:
    1. Provide low-VOC, solvent-based EPDM adhesive primer that complies with Ozone Transport Commission (OTC) Model Rule, Single Ply Roofing Adhesive Primers; www.otcair.org.

G. Insulation Adhesive: As recommended by insulation manufacturer.

H. Walkway Pads: Suitable for maintenance traffic, contrasting color or otherwise visually distinctive from roof membrane.
    1. Composition: Roofing membrane manufacturer's standard.
    2. Size: As indicated.
    3. Surface Color: Black.

**PART 3 EXECUTION**

3.01 EXAMINATION

A. Verify that surfaces and site conditions are ready to receive work.

B. Verify deck is supported and secure.

NOT FOR BIDDING

C. Verify deck is clean and smooth, flat, free of depressions, waves, or projections, properly sloped and suitable for installation of roof system.

D. Verify deck surfaces are dry and free of snow or ice.

E. Verify that roof openings, curbs, and penetrations through roof are solidly set, and cant strips are in place.

3.02 METAL DECK PREPARATION

A. Install preformed acoustical glass fiber insulation strips specified in Section 053100 within roof deck flutes. Install in accordance with manufacturer's instructions.

3.03 INSULATION - UNDER MEMBRANE

A. Attachment of Insulation :
   1. Mechanically fasten first layer of insulation to deck in accordance with roofing manufacturer's instructions and Factory Mutual requirements.
      a. At areas with exposed structure below, size fasteners for a maximum ¾ inch penetration below deck, and locate in top flute of deck.
      b. At areas with acoustical deck, size fasteners so that they do not penetrate the bottom surface of the deck.
   2. Embed second layer of insulation into full bed of adhesive in accordance with roofing and insulation manufacturers' instructions.
      a. At contractor’s option, second layer of insulation may be mechanically fastened in areas without exposed ceilings.

B. Lay subsequent layers of insulation with joints staggered minimum 6 inch from joints of preceding layer.

C. Place tapered insulation to the required slope pattern in accordance with manufacturer's instructions.

D. On metal deck, place boards parallel to flutes with insulation board edges bearing on deck flutes.

E. Lay boards with edges in moderate contact without forcing. Cut insulation to fit neatly to perimeter blocking and around penetrations through roof.

F. Tape joints of insulation in accordance with roofing and insulation manufacturers' instructions.

G. At roof drains, use factory-tapered boards to slope down to roof drains over a distance of 24 inches.
   1. Trim surface of insulation where necessary at roof drains so completed surface is flush and does not restrict flow of water.

H. Do not apply more insulation than can be covered with membrane in same day.

I. Install cover board over insulation with long joints in continuous straight lines with end joints staggered between rows. Adhesive attach cover board, following manufacturer recommendations.
   1. For multilayer locations, lay subsequent coverboard layers with joints staggered minimum 6 inch from joints of preceding layer.

3.04 MEMBRANE APPLICATION

A. Apply elastomeric membrane roofing system in accordance with manufacturer's recommendations.

B. Roll out membrane, free from wrinkles or tears. Place sheet into place without stretching.

NOT FOR BIDDING

C. Shingle joints on sloped substrate in direction of drainage.

D. Fully Adhered Application: Apply adhesive to substrate and membrane at rate required by manufacturer. Fully embed membrane in adhesive except in areas directly over or within 3 inches of expansion joints. Fully adhere one roll before proceeding to adjacent rolls.
   1. Protect white surface from discoloration from bonding adhesive.
   2. Do not place bonding adhesive containers or lids on white membrane surface.

E. Overlap edges and ends and seal seams by contact tape, minimum 6 inches. Seal permanently waterproof. Apply uniform bead of sealant to joint edge.

F. At intersections with vertical surfaces:
   1. Extend membrane over cant strips and up a minimum of 8 inches onto vertical surfaces.
   2. Fully adhere flexible flashing over membrane and up to termination bar.

G. Around roof penetrations, seal flanges and flashings with flexible flashing.

H. Install roofing expansion joints where indicated. Make joints watertight.
   1. Install prefabricated joint components in accordance with manufacturer's instructions.

I. Coordinate installation of roof drains and related flashings.

J. Coordinate installation of associated counterflashings installed under other sections.

3.05 ROOF WALKWAY INSTALLATION

A. Flexible Walkways: Install walkway products in locations indicated. Adhere walkway products to substrate with compatible adhesive according to roofing system manufacturer's written instructions.

3.06 FIELD QUALITY CONTROL

A. See Section 014000 - Quality Requirements, for general requirements for field quality control and inspection.

B. Require site attendance of roofing and insulation material manufacturers weekly during installation of the Work.

3.07 CLEANING

A. See Section 017419 - Construction Waste Management and Disposal, for additional requirements.

B. Remove markings from finished surfaces.

C. In areas where finished surfaces are soiled by work of this section, consult manufacturer of surfaces for cleaning advice and comply with their documented instructions.

D. Repair or replace defaced or damaged finishes caused by work of this section.

3.08 PROTECTION

A. Protect installed roofing and flashings from construction operations.

B. Where traffic must continue over finished roof membrane, protect surfaces using durable materials.

**END OF SECTION**

NOT FOR BIDDING

# SECTION 076200
# SHEET METAL FLASHING AND TRIM

## PART 1 GENERAL

1.01 SECTION INCLUDES

A. Fabricated sheet metal items, including flashings, counterflashings, gutters, and downspouts.

B. Sealants for joints within sheet metal fabrications.

1.02 RELATED REQUIREMENTS

A. Section 042000 - Unit Masonry: Installation of flashing materials embedded in masonry.

B. Section 061000 - Rough Carpentry: Wood nailers for sheet metal work.

C. Section 072500 - Weather Barriers: Installation of weather barriers and interface with flashing materials.

D. Section 073113 - Asphalt Shingles: Non-metallic flashings associated with shingle roofing.

E. Section 077100 - Roof Specialties: Manufactured copings, flashings, and expansion joint covers.

F. Section 077200 - Roof Accessories: Manufactured metal roof curbs.

G. Section 079200 - Joint Sealants: Sealing non-lap joints between sheet metal fabrications and adjacent construction.

1.03 REFERENCE STANDARDS

A. ASTM A653/A653M - Standard Specification for Steel Sheet, Zinc-Coated (Galvanized) or Zinc-Iron Alloy-Coated (Galvannealed) by the Hot-Dip Process; 2015.

B. ASTM A666 - Standard Specification for Annealed or Cold-Worked Austenitic Stainless Steel Sheet, Strip, Plate, and Flat Bar; 2015.

C. ASTM B32 - Standard Specification for Solder Metal; 2008 (Reapproved 2014).

D. ASTM C920 - Standard Specification for Elastomeric Joint Sealants; 2014a.

E. ASTM D2178/D2178M - Standard Specification for Asphalt Glass Felt Used in Roofing and Waterproofing; 2015.

F. ASTM D4586/D4586M - Standard Specification for Asphalt Roof Cement, Asbestos-Free; 2007 (Reapproved 2012).

G. SMACNA (ASMM) - Architectural Sheet Metal Manual; 2012.

1.04 ADMINISTRATIVE REQUIREMENTS

A. Preinstallation Meeting: Convene one week before starting work of this section.

1.05 SUBMITTALS

A. See Section 013000 - Administrative Requirements, for submittal procedures.

B. Shop Drawings: Indicate material profile, jointing pattern, jointing details, fastening methods, flashings, terminations, and installation details.

C. Samples: Submit two samples 6 by 6 inch in size illustrating metal finish color.

1.06 QUALITY ASSURANCE

A. Perform work in accordance with SMACNA (ASMM) and CDA A4050 requirements and standard details, except as otherwise indicated.

B. Maintain one copy of each document on site.

NOT FOR BIDDING

C. Fabricator and Installer Qualifications: Company specializing in sheet metal work with 5 years of documented experience.

1.07 DELIVERY, STORAGE, AND HANDLING

A. Stack material to prevent twisting, bending, and abrasion, and to provide ventilation. Slope metal sheets to ensure drainage.

B. Prevent contact with materials that could cause discoloration or staining.

**PART 2 PRODUCTS**

2.01 SHEET MATERIALS

A. Pre-Finished Aluminum: ASTM B209 (ASTM B209M); 20 gage (0.032 inch) thick; plain finish shop pre-coated with fluoropolymer coating.
   1. Fluoropolymer Coating: High Performance Organic Finish, AAMA 2605; multiple coat, thermally cured fluoropolymer finish system.
   2. Color: As selected by Architect from manufacturer's full colors.

B. Stainless Steel: ASTM A666, Type 304 alloy, soft temper, 26 gage, (0.0156 inch) thick; smooth No. 4 - Brushed finish.

2.02 FLASHING TYPES

A. Flashing Type 1: Two-piece interlocking type:
   1. Material: Stainless steel.
   2. Configurations shall be as shown on drawings.
   3. Where cap flashings or counter flashings occur, they shall be of two-piece construction with a receiver having a special vertical locking slot that requires no malleting or bending to hold the insert member in place.
   4. Keyed or corrugated flashings are unacceptable.
   5. Where flashings do not turn up behind walls, terminate with a 1/4" hook dam.
   6. Thru-wall flashings at parapets shall be hemmed flush with the exposed face of face brick.
   7. Fasteners, mastic for sealing and attachment, etc., shall be as recommended by the manufacturer.

B. Flashing Type 2: Masonry thru-wall type:
   1. Stainless steel : ASTM A666 Type 304, soft temper, 0.015 inch (0.4 mm) thick; smooth No. 4 finish.
   2. Configurations shall be as shown on drawings.
   3. Installation: Refer to Section 042000 - Unit Masonry.

C. Flashing Type 3: Membrane roofing base flashing material as specified in Section 075300 - Elastomeric Membrane Roofing .

D. Flashing Type 4: Formed metal flashing (Other than Type 1):
   1. Material: Stainless steel.
   2. Configurations shall be as shown on drawings.

2.03 ACCESSORIES

A. Fasteners: Stainless steel, with soft neoprene washers.

B. Outside corner and inside corner material; manufacturer’s standard available units using:
   1. Stainless steel: 26 gauge stainless steel.

C. End dam: Product may be folded in line with the flashing material or utilize preformed end dams by manufacturer using:

NOT FOR BIDDING

1. Stainless steel: 26 gauge stainless steel

D. Protective Backing Paint: Asphaltic mastic, ASTM D4479 Type I.

E. Sealant to be Concealed in Completed Work: Type 3 as specified in Section 079200.

F. Sealant to be Exposed in Completed Work: Type 1 as specified in Section 079200.

G. Reglets: Surface mounted type, galvanized steel; face and ends covered with plastic tape.

H. Termination Bars: 1 inch wide x 1/8 inch thick; stainless steel.

2.04 FABRICATION

A. Form sections true to shape, accurate in size, square, and free from distortion or defects.

B. Form pieces in longest possible lengths.

C. Hem exposed edges on underside 1/2 inch; miter and seam corners.

D. Form material with flat lock seams, except where otherwise indicated; at moving joints, use sealed lapped, bayonet-type or interlocking hooked seams.

E. Fabricate corners from one piece with minimum 18 inch long legs; seam for rigidity, seal with sealant.

F. Fabricate vertical faces with bottom edge formed outward 3/4 inch and hemmed to form drip.

G. Fabricate flashings to allow toe to extend 4 inches over roofing membrane. Return and brake edges.

2.05 GUTTER AND DOWNSPOUT FABRICATION

A. Gutters: SMACNA (ASMM), Rectangular profile.
   1. Material: Pre-Finished Aluminum

B. Downspouts: Rectangular profile.
   1. Material: Pre-Finished Aluminum

C. Gutters and Downspouts: Sizes indicated.

D. Accessories:
   1. Anchorage Devices: In accordance with SMACNA (ASMM) requirements.
   2. Gutter Supports: Brackets.
   3. Downspout Supports: Brackets.

E. Splash Pads: Precast concrete type, of size and profiles indicated; minimum 3000 psi at 28 days, with minimum 5 percent air entrainment.

2.06 ACCESSORIES

A. Fasteners: Galvanized steel, with soft neoprene washers.

B. Primer: Zinc chromate type.

C. Concealed Sealants: Non-curing butyl sealant.

D. Exposed Sealants: ASTM C920; elastomeric sealant, with minimum movement capability as recommended by manufacturer for substrates to be sealed; color to match adjacent material.

E. Plastic Cement: ASTM D4586/D4586M, Type I.

**PART 3 EXECUTION**

3.01 EXAMINATION

A. Verify roof openings, curbs, pipes, sleeves, ducts, and vents through roof are solidly set, reglets in place, and nailing strips located.

NOT FOR BIDDING

B. Verify roofing termination and base flashings are in place, sealed, and secure.

3.02 PREPARATION

A. Install starter and edge strips, and cleats before starting installation.

B. Install surface mounted reglets true to lines and levels, and seal top of reglets with sealant.

C. Back paint concealed metal surfaces with protective backing paint to a minimum dry film thickness of 15 mil.

3.03 INSTALLATION

A. Conform to drawing details and to the following:
   1. SMACNA Architectural Sheet Metal Manual,

B. Insert flashings into reglets to form tight fit; secure in place with plastic wedges; seal flashings into reglets with sealant.

C. Secure flashings in place using concealed fasteners, and use exposed fasteners only where permitted..

D. Apply plastic cement compound between metal flashings and felt flashings.

E. Fit flashings tight in place; make corners square, surfaces true and straight in planes, and lines accurate to profiles.

F. Fasten cavity wall flashings to stud back-up with a non-corrosive termination bar and seal the top edge of the flashing with sealant.

G. Seal metal joints watertight.

H. Secure gutters and downspouts in place with concealed fasteners.

I. Set splash pads under downspouts.

3.04 FIELD QUALITY CONTROL

A. See Section 014000 - Quality Requirements, for field inspection requirements.

B. Inspection will involve surveillance of work during installation to ascertain compliance with specified requirements.

**END OF SECTION**

NOT FOR BIDDING

# SECTION 077100
# ROOF SPECIALTIES

## PART 1 GENERAL

1.01 SECTION INCLUDES

A. Manufactured roof specialties, including copings.

B. Roof expansion joint covers.

1.02 RELATED REQUIREMENTS

A. Section 074213 - Metal Wall Panels: Copings associated with metal wall panel systems

B. Section 075300 - Elastomeric Membrane Roofing: Roof warranty requirements

C. Section 077200 - Roof Accessories: Manufactured curbs and roof hatches

1.03 REFERENCE STANDARDS

A. ANSI/SPRI/FM 4435/ES-1 - Test Standard for Edge Systems Used with Low Slope Roofing Systems; 2017.

B. NRCA (RM) - The NRCA Roofing Manual; 2017.

1.04 SUBMITTALS

A. See Section 013000 - Administrative Requirements for submittal procedures.

B. Product Data: Provide data on shape of components, materials and finishes, anchor types and locations.

C. Shop Drawings: Indicate configuration and dimension of components, adjacent construction, required clearances and tolerances, and other affected work.

D. Samples: Submit two appropriately sized samples of coping and expansion joint cover.

E. Manufacturer's Installation Instructions: Indicate special procedures, fasteners, supporting members, and perimeter conditions requiring special attention.

1.05 WARRANTY:

A. Provide a roofing manufacturer's full system warranty to include roof edge systems.

B. See Section 075300 for warranty requirements.

C. Provide 20-year warranty for painted finishes, covering color fade, chalk and film integrity.

## PART 2 PRODUCTS

2.01 MANUFACTURERS

A. Roof Edge Flashings and Copings:
   1. Metal-Era Inc: www.metalera.com.
   2. OMG Roofing Products: www.omgroofing.com/#sle.
   3. Substitutions: See Section 016000 - Product Requirements.

B. Expansion Joint Covers:
   1. GAF: www.gaf.com/sle.
   2. Johns Manville: www.jm.com.
   3. MM Systems Corp: www.mmsystemscorp.com.
   4. Substitutions: See Section 016000 - Product Requirements.

C. Pipe and Penetration Flashings:
   1. Portals Plus: www.portalsplus.com.
   2. Substitutions: See Section 016000 - Product Requirements.

NOT FOR BIDDING

2.02 COMPONENTS

A. Roof Edge Flashings: Factory fabricated to sizes required; mitered, welded corners; concealed fasteners.
   1. Configuration: Fascia, and edge securement for roof membrane.
   2. Pull-Off Resistance: Tested in accordance with ANSI/SPRI/FM 4435/ES-1 using test methods RE-1 and RE-2 to positive and negative design wind pressure as defined by applicable local building code.
   3. Material: Formed aluminum sheet, 0.050 inch thick, minimum.
   4. Color: To be selected by Architect from manufacturer's standard range.
   5. Manufacturers:
      a. OMG Roofing Products; Terminedge EX: www.omgroofing.com/#sle.
      b. Metal-Era, Inc., Anchor-Tite Fascia: www.metalera.com.
      c. Substitutions: See Section 016000 - Product Requirements.

B. Copings: Factory fabricated to sizes required; mitered, welded corners; concealed fasteners.
   1. Configuration: Concealed hold down cleat at both legs; internal splice piece at joints of same material, thickness and finish as cap; concealed stainless steel fasteners.
   2. Pull-Off Resistance: Tested in accordance with ANSI/SPRI/FM 4435/ES-1 using test method RE-3 to positive and negative design wind pressure as defined by applicable local building code.
   3. Material: Formed aluminum sheet, 0.050 inch thick, minimum.
   4. Finish: 70 percent polyvinylidene fluoride.
   5. Color: To be selected by Architect from manufacturer's full range.
   6. Manufacturers:
      a. OMG Roofing Products; Permanap Coping: www.omgroofing.com/#sle.
      b. Metal-Era, Inc., Perma-Tite Coping: www.metalera.com.
      c. Substitutions: See Section 016000 - Product Requirements.

C. Expansion Joint Covers: Composite construction of 6 inch wide flexible compatible flashing of white color with closed cell urethane foam backing, each edge seamed to aluminum sheet metal flanges, designed for nominal joint width of 1 inch. Include special formed corners, tees, intersections, and wall flashings, each sealed watertight.

D. Pipe and Penetration Flashing: Base of rounded aluminum, compatible with specified roof system, and capable of accomodating pipes sized between 3/8 inch and 12 inch.

2.03 ACCESSORIES

A. Sealant for Joints in Linear Components: As recommended by component manufacturer.

B. Adhesive for Anchoring to Roof Membrane: Compatible with roof membrane and approved by roof membrane manufacturer.

2.04 FINISHES

A. PVDF (Polyvinylidene Fluoride) Coating: Superior Performance Organic Finish, AAMA 2605; multiple coat, thermally cured fluoropolymer finish system; color as indicated.

**PART 3 EXECUTION**

3.01 EXAMINATION

A. Verify that deck, curbs, roof membrane, base flashing, and other items affecting work of this Section are in place and positioned correctly.

NOT FOR BIDDING

3.02 INSTALLATION

A. Install components in accordance with manufacturer's instructions and NRCA (RM) applicable requirements.

B. Seal joints within components when required by component manufacturer.

C. Anchor components securely.

D. Coordinate installation of components of this section with installation of roofing membrane and base flashings.

E. Coordinate installation of sealants and roofing cement with work of this section to insure water tightness.

**END OF SECTION**

NOT FOR BIDDING

# SECTION 077200
# ROOF ACCESSORIES

## PART 1 GENERAL

1.01 SECTION INCLUDES

A. Curbs.

B. Equipment rails.

C. Roof penetrations mounting curbs.

D. Roof hatches, manual and automatic operation, including smoke vents.

1.02 RELATED REQUIREMENTS

A. Section 075300 - Elastomeric Membrane Roofing

B. Section 077100 - Roof Specialties: Other manufactured roof items.

1.03 PRICE AND PAYMENT PROCEDURES

A. See Section 012300 - Alternates, for alternates affecting the work of this section.

1.04 REFERENCE STANDARDS

A. 29 CFR 1910.23 - Ladders; current edition.

B. ASTM A653/A653M - Standard Specification for Steel Sheet, Zinc-Coated (Galvanized) or Zinc-Iron Alloy-Coated (Galvannealed) by the Hot Dip Process; 2015.

C. FM (AG) - FM Approval Guide; current edition.

D. UL (DIR) - Online Certifications Directory; current listings at database.ul.com.

1.05 SUBMITTALS

A. Product Data: Manufacturer's data sheets on each product to be used.
   1. Preparation instructions and recommendations.
   2. Storage and handling requirements and recommendations.
   3. Installation methods.
   4. Maintenance requirements.
   5. For smoke hatches, submit evidence of approval by evaluation agency specified.

B. Shop Drawings: Submit dimensioned, project specific shop drawings for each type of roof-mounted item.

C. Certificate: For smoke hatches, provide certificate of approval from authority having jurisdiction.

D. Warranty Documentation:
   1. Submit manufacturer warranty.
   2. Ensure that forms have been completed in Owner's name and registered with manufacturer.

1.06 DELIVERY, STORAGE, AND HANDLING

A. Store products in manufacturer's unopened packaging until ready for installation.

B. Store products under cover and elevated above grade.

1.07 WARRANTY

A. Correct defective Work within a two year period after Date of Substantial Completion.

NOT FOR BIDDING

**PART 2 PRODUCTS**

2.01 ROOF CURBS

A. Roof Curbs Mounting Assemblies: Factory fabricated hollow sheet metal construction, internally reinforced, and capable of supporting superimposed live and dead loads and designated equipment load with fully mitered and sealed corner joints welded or mechanically fastened, and integral counterflashing with top and edges formed to shed water.
   1. Roof Curb Mounting Substrate: Curb substrate consists of standing seam metal roof panel system.
   2. Sheet Metal Material:
      a. Aluminum: 0.080 inch minimum thickness, with 3003 alloy, and H14 temper.
   3. Sheet Metal: Hot-dip zinc coated steel sheet complying with ASTM A653/A653M, SS Grade 33; G90 coating designation; 18 gage, 0.048 inch thick.
   4. Fabricate curb bottom and mounting flanges for installation directly on metal roof panel system to match slope and configuration of system.
      a. Extend side flange to next adjacent roof panel seam and comply with seam configurations and seal connection, providing at least 6 inch clearance between curb and metal roof panel flange allowing water to properly flow past curb.
      b. Where side of curb aligns with metal roof panel flange attach fasteners on upper slope of flange to curb connection allowing water to flow past below fasteners, and seal connection.
      c. Maintain at least 12 inch clearance from curb and lap upper curb flange on underside of down sloping metal roof panel and seal connection.
      d. Lap lower curb flange over top of down sloping metal roof panel and seal connection.
   5. Provide layouts and configurations indicated on drawings.

B. Equipment Rail Curbs: Straight curbs on each side of equipment, with top of curbs horizontal and level with each other for equipment mounting.
   1. Height Above Finished Roof Surface: 8 inches, minimum.
   2. Height Above Roof Deck: 16 inches, minimum.

C. Pipe, Duct, or Conduit Mounting Curbs: Vertical posts, minimum 8 inches square unless otherwise indicated.
   1. Provide sliding channel welded along top edge with adjustable height steel bracket, fabricated to fit item supported.
   2. Height Above Finished Roof Surface: 8 inches, minimum.
   3. Height Above Roof Deck: 16 inches, minimum.

2.02 ROOF HATCHES AND VENTS, MANUAL AND AUTOMATIC OPERATION

A. Roof Hatch Manufacturers:
   1. Bilco Company; Model E-50TB: www.bilco.com/#sle.
   2. Substitutions: See Section 016000 - Product Requirements.

B. Smoke and Heat Vent Manufacturers:
   1. Bilco Company: www.bilco.com/#sle.
      a. Type SH2 (Acoustical): Model ACDSH 4896
   2. Substitutions: See Section 016000 - Product Requirements.

C. Roof Hatches and Smoke Vents: Factory-assembled aluminum frame and cover, complete with operating and release hardware.
   1. Style: Provide flat metal covers unless otherwise indicated.

NOT FOR BIDDING

2. Mounting: Provide frames and curbs suitable for mounting conditions as indicated on drawings.
3. Sound Rated Hatches: minimum STC of 46.
4. Thermally Broken Hatches: Added insulation to frame and cover; available in each manufacturer's standard, single leaf sizes; special sizes available upon request
5. For Ladder Access: Single leaf; 36 by 36 inches.
6. For Ships Ladder Access: Single leaf; 30 by 54 inches.

D. Smoke and Heat Vents (Stage): Where "smoke" or "smoke/heat" operation is indicated, provide the following additional features and also include manual operation for access.
1. Smoke Release Mechanism: Automatic opening on melting of replaceable UL (DIR) listed fusible link at 165 deg F.
2. UL (DIR) or FM (AG) listed as automatically operated smoke and heat vent.
3. Provide 120V, electrically operated curb-mounted resettable release mechanism. Include three-button push control station ('open', 'close', 'stop') for each smoke vent accessible from the stage floor, at location shown.
   a. Bilco Thermolatch II or equivalent product of other listed manufacturers.

E. Frames and Curbs: One-piece curb and frame with integral cap flashing to receive roof flashings; extended bottom flange to suit mounting.
1. Material: Mill finished aluminum, 11 gage, 0.0907 inch thick.
2. Insulation: Manufacturer's standard; 1 inch rigid glass fiber, located on outside face of curb.

F. Metal Covers: Flush, insulated, hollow metal construction.
1. Capable of supporting 40 psf live load.
2. Material: Mill finished aluminum; outer cover 11 gage, 0.0907 inch thick, liner 0.04 inch thick.
3. Insulation: Manufacturer's standard 1 inch rigid glass fiber.
4. Gasket: Neoprene, continuous around cover perimeter.

G. Safety Railing System (Roof Hatches): Manufacturer's standard accessory safety rail system mounted directly to curb.
1. Comply with 29 CFR 1910.23, with a safety factor of two.
2. Posts and Rails: Aluminum tube.
3. Gate: Same material as railing; automatic closing with latch.
4. Finish: Manufacturer's standard, factory applied finish.
5. Fasteners: Stainless steel, Type 316.
6. Manufacturers:
   a. BILCO Company; Bil-Guard 2.0: www.bilco.com/#sle.
   b. Substitutions: See Section 016000 - Product Requirements.

H. Hardware: Steel, zinc coated and chromate sealed, unless otherwise indicated or required by manufacturer.
1. Lifting Mechanisms: Compression or torsion spring operator with shock absorbers that automatically opens upon release of latch; capable of lifting covers despite 10 psf load.
2. Hinges: Heavy duty pintle type.
3. Hold open arm with vinyl-coated handle for manual release.
4. Latch: Upon closing, engage latch automatically and reset manual release.
5. Manual Release: Pull handle on interior.
6. Smoke Hatches: Manual release operation not to disturb automatic release mechanisms; easy resetting by Owner's maintenance personnel; provide latch designed to prevent

NOT FOR BIDDING

relatching unless automatic release mechanism has been properly reset for automatic operation.

7. Locking: Padlock hasp on interior.

**PART 3 EXECUTION**

3.01 EXAMINATION

A. Do not begin installation until substrates have been properly prepared.

B. If substrate preparation is the responsibility of another installer, notify Architect of unsatisfactory preparation before proceeding.

3.02 PREPARATION

A. Clean surfaces thoroughly prior to installation.

B. Prepare surfaces using methods recommended by manufacturer for achieving acceptable results for applicable substrate under project conditions.

3.03 INSTALLATION

A. Install in accordance with manufacturer's instructions, in manner that maintains roofing system weather-tight integrity.

3.04 PROTECTION

A. Protect installed products until completion of project.

B. Touch-up, repair or replace damaged products before Date of Substantial Completion.

**END OF SECTION**

NOT FOR BIDDING

# SECTION 078400
# FIRESTOPPING

## PART 1 GENERAL

1.01 SECTION INCLUDES

A. Firestopping systems.

B. Firestopping of all joints and penetrations in fire resistance rated and smoke resistant assemblies, whether indicated on drawings or not, and other openings indicated.

1.02 RELATED REQUIREMENTS

A. Section 078100 - Applied Fireproofing.

B. Section 092116 - Gypsum Board Assemblies: Gypsum wallboard fireproofing.

1.03 REFERENCE STANDARDS

A. ASTM E119 - Standard Test Methods for Fire Tests of Building Construction and Materials; 2016a.

B. ASTM E814 - Standard Test Method for Fire Tests of Penetration Firestop Systems; 2013a.

C. ASTM E1966 - Standard Test Method for Fire Resistive Joint Systems; 2007 (Reapproved 2011).

D. ASTM E2174 - Standard Practice for On-Site Inspection of Installed Firestops; 2014b.

E. ASTM E2393 - Standard Practice for On-Site Inspection of Installed Fire Resistive Joint Systems and Perimeter Fire Barriers; 2010a (Reapproved 2015).

F. ASTM E2307 - Standard Test Method for Determining Fire Resistance of Perimeter Fire Barriers Using Intermediate-Scale, Multi-story Test Apparatus; 2015b.

G. ASTM E2837 - Standard Test Method for Determining the Fire Resistance of Continuity Head-of-Wall Joint Systems Installed Between Rated Wall Assemblies and Nonrated Horizontal Assemblies; 2013.

H. ASTM G21 - Standard Practice for Determining Resistance of Synthetic Polymeric Materials to Fungi; 2015.

I. ITS (DIR) - Directory of Listed Products; current edition.

J. FM (AG) - FM Approval Guide; current edition.

K. UL 1479 - Standard for Fire Tests of Penetration Firestops; Current Edition, Including All Revisions.

L. UL 2079 - Standard for Tests for Fire Resistance of Building Joint Systems; Current Edition, Including All Revisions.

M. UL (DIR) - Online Certifications Directory; current listings at database.ul.com.

N. UL (FRD) - Fire Resistance Directory; current edition.

1.04 SUBMITTALS

A. See Section 013000 - Administrative Requirements, for submittal procedures.

B. Schedule of Firestopping: List each type of penetration, fire rating of the penetrated assembly, and firestopping test or design number.

C. Product Data: Provide data on product characteristics, performance ratings, and limitations.

D. Manufacturer's Installation Instructions: Indicate preparation and installation instructions.

E. Manufacturer's Certificate: Certify that products meet or exceed specified requirements.

NOT FOR BIDDING

1.05 QUALITY ASSURANCE

A. Fire Testing: Provide firestopping assemblies of designs that provide the scheduled fire ratings when tested in accordance with methods indicated.
   1. Listing in UL (FRD) or FM (AG) will be considered as constituting an acceptable test report.
   2. Valid evaluation report published by ICC Evaluation Service, Inc. (ICC-ES) at www.icc-es.org will be considered as constituting an acceptable test report.

B. Manufacturer Qualifications: Company specializing in manufacturing the products specified in this section with minimum three years documented experience.

C. Installer Qualifications: Company specializing in performing the work of this section and:
   1. Trained by manufacturer.
   2. Verification of minimum three years documented experience installing work of this type.

1.06 FIELD CONDITIONS

A. Comply with firestopping manufacturer's recommendations for temperature and conditions during and after installation; maintain minimum temperature before, during, and for three days after installation of materials.

**PART 2 PRODUCTS**

2.01 MANUFACTURERS

A. Firestopping Manufacturers:
   1. 3M Fire Protection Products: www.3m.com/firestop.
   2. Hilti, Inc; _____: www.us.hilti.com/#sle.
   3. Nelson FireStop Products: www.nelsonfirestop.com.
   4. Specified Technologies Inc: www.stifirestop.com/#sle.
   5. International Fireproof Technology, Inc. ; www.painttoprotect.com/.
   6. Substitutions: See Section 01 6000 - Product Requirements.

2.02 MATERIALS

A. Firestopping Materials: Any materials meeting requirements.

B. Mold and Mildew Resistance: Provide firestoppping materials with mold and mildew resistance rating of zero (0) in accordance with ASTM G21.

C. Primers, Sleeves, Forms, Insulation, Packing, Stuffing, and Accessories: Provide type of materials as required for tested firestopping assembly.

D. Fire Ratings: Refer to drawings for required systems and ratings.

2.03 FIRESTOPPING ASSEMBLY REQUIREMENTS

A. General:
   1. Provide firestopping composed of components that are compatible with each other, the substrates forming openings, and the items, if any, penetrating the firestopping under conditions of service and application, as demonstrated by the firestopping manufacturer based on testing and field experience.
   2. Provide components for each firestopping system that are needed to install fill material. Use only components specified by the firestopping manufacturer and approved by the qualified testing agency for the designated fire-resistance-rated systems.

B. Perimeter Fire Containment Firestopping: Use system that has been tested according to ASTM E2307 to have fire resistance F Rating equal to required fire rating of floor assembly.

NOT FOR BIDDING

1. Where floor assembly is not required to have a fire rating, provide systems that have been tested to show L Rating as indicated.

C. Head-of-Wall Joint System Firestopping at Joints Between Fire-Rated Wall Assemblies and Non-Rated Horizontal Assemblies: Use system that has been tested according to ASTM E2837 to have fire resistance F Rating equal to required fire rating of floor or wall, whichever is greater.
   1. Movement: Provide systems that have been tested to show movement capability as indicated.

D. Floor-to-Floor, Wall-to-Wall, and Wall-to-Floor Joints, Except Perimeter, Where Both Are Fire-Rated: Use system that has been tested according to ASTM E1966 or UL 2079 to have fire resistance F Rating equal to required fire rating of the assembly in which the joint occurs.
   1. Listing by FM (AG), ITS (DIR), UL (DIR), or UL (FRD) in their certification directories will be considered evidence of successful testing.

E. Through Penetration Firestopping: Use system that has been tested according to ASTM E814 to have fire resistance F Rating equal to required fire rating of penetrated assembly.
   1. Temperature Rise: Where penetration is not contained in a vertical cavity, provide systems that have been tested to show T Rating equal to F Rating, where required by code.
   2. Listing by FM (AG), ITS (DIR), UL (DIR), or UL (FRD) in their certification directories will be considered evidence of successful testing.

2.04 FIRESTOPPING SYSTEMS

A. Firestopping: Any material meeting requirements.
   1. Fire Ratings: Use system that is listed by FM (AG), ITS (DIR), or UL (FRD) and tested in accordance with ASTM E814, ASTM E119, or UL 1479 with F Rating equal to fire rating of penetrated assembly and minimum T Rating Equal to F Rating and in compliance with other specified requirements.

**PART 3 EXECUTION**

3.01 EXAMINATION

A. Verify openings are ready to receive the work of this section.

3.02 PREPARATION

A. Clean substrate surfaces of dirt, dust, grease, oil, loose material, or other materials that could adversely affect bond of firestopping material.

B. Remove incompatible materials that could adversely affect bond.

C. Install backing materials to prevent liquid material from leakage.

3.03 COORDINATION

A. Coordinate construction of openings, penetrations and construction joints to ensure that the fire stop systems are installed according to specified requirements.

B. Coordinate sizing of sleeves, openings, core-drilled holes, or cut openings to accommodate through-penetration fire stop systems. Coordinate construction and sizing of joints to ensure that fire-resistive joint systems are installed according to specified requirements.

C. Coordinate fire stopping with other trades so that obstructions are not placed in the way prior to the installation of the fire stop systems.

D. Consult with mechanical engineer, project manager, and damper manufacturer prior to installation of UL firestop systems that might hamper the performance of fire dampers as it pertains to duct work.

NOT FOR BIDDING

3.04 INSTALLATION

A. Install materials in manner described in fire test report and in accordance with manufacturer's instructions, completely closing openings.

B. Do not cover installed firestopping until inspected by authorities having jurisdiction.

C. Install labeling required by code.

3.05 FIELD QUALITY CONTROL

A. Independent Testing Agency: Inspection agency employed and paid by Owner, will examine penetration firestopping in accordance with ASTM E2174, and ASTM E2393.

B. Repair or replace penetration firestopping and joints at locations where inspection results indicate firestopping or joints do not meet specified requirements.

3.06 CLEANING

A. Clean adjacent surfaces of firestopping materials.

3.07 PROTECTION

A. Protect adjacent surfaces from damage by material installation.

**END OF SECTION**

NOT FOR BIDDING

# SECTION 079200
# JOINT SEALANTS

## PART 1 GENERAL

1.01 SECTION INCLUDES

A. Nonsag gunnable joint sealants.

B. Self-leveling pourable joint sealants.

C. Joint backings and accessories.

1.02 RELATED REQUIREMENTS

A. Section 071300 - Sheet Waterproofing: Sealing cracks and joints in waterproofing substrate surfaces using materials specified in this section.

B. Section 072500 - Weather Barriers: Sealants required in conjunction with air barriers and vapor retarders.

C. Section 078400 - Firestopping: Firestopping sealants.

D. Section 087100 - Door Hardware: Setting exterior door thresholds in sealant.

E. Section 088000 - Glazing: Glazing sealants and accessories.

F. Section 092116 - Gypsum Board Assemblies: Sealing acoustical and sound-rated walls and ceilings.

G. Section 092216 - Non-Structural Metal Framing: Sealing between framing and adjacent construction in acoustical and sound-rated walls and ceilings.

H. Section 093000 - Tiling: Sealant between tile and plumbing fixtures and at junctions with other materials and changes in plane.

1.03 REFERENCE STANDARDS

A. ASTM C661 - Standard Test Method for Indentation Hardness of Elastomeric-Type Sealants by Means of a Durometer; 2006 (Reapproved 2011).

B. ASTM C834 - Standard Specification for Latex Sealants; 2014.

C. ASTM C919 - Standard Practice for Use of Sealants in Acoustical Applications; 2012.

D. ASTM C920 - Standard Specification for Elastomeric Joint Sealants; 2014a.

E. ASTM C1193 - Standard Guide for Use of Joint Sealants; 2016.

F. ASTM C1248 - Standard Test Method for Staining of Porous Substrate by Joint Sealants; 2008 (Reapproved 2012).

G. ASTM C1311 - Standard Specification for Solvent Release Sealants; 2014.

H. ASTM C1521 - Standard Practice for Evaluating Adhesion of Installed Weatherproofing Sealant Joints; 2013.

I. ASTM D2240 - Standard Test Method for Rubber Property--Durometer Hardness; 2005 (Reapproved 2010).

1.04 SUBMITTALS

A. Product Data for Sealants: Submit manufacturer's technical data sheets for each product to be used, that includes the following.

1. Physical characteristics, including movement capability, VOC content, hardness, cure time, and color availability.
2. List of backing materials approved for use with the specific product.

NOT FOR BIDDING

3. Substrates that product is known to satisfactorily adhere to and with which it is compatible.
4. Substrates the product should not be used on.

B. Product Data for Accessory Products: Submit manufacturer's technical data sheet for each product to be used, including physical characteristics, installation instructions, and recommended tools.

C. Color Cards for Selection: Where sealant color is not specified, submit manufacturer's color cards showing standard colors available for selection.

D. Samples for Verification: Where custom sealant color is specified, obtain direction from Architect and submit at least two physical samples for verification of color of each required sealant.

E. Preinstallation Field Adhesion Test Plan: Submit at least two weeks prior to start of installation.

F. Field Quality Control Plan: Submit at least two weeks prior to start of installation.

G. Preinstallation Field Adhesion Test Reports: Submit filled out Preinstallation Field Adhesion Test Reports log within 10 days after completion of tests; include bagged test samples and photographic records.

H. Field Quality Control Log: Submit filled out log for each length or instance of sealant installed, within 10 days after completion of inspections/tests; include bagged test samples and photographic records, if any.

1.05 QUALITY ASSURANCE

A. Manufacturer Qualifications: Company specializing in manufacturing the products specified in this section with minimum three years documented experience.

B. Installer Qualifications: Company specializing in performing the work of this section and with at least three years of documented experience.

C. Testing Agency Qualifications: Independent firm specializing in performing testing and inspections of the type specified in this section.

D. Preinstallation Field Adhesion Test Plan: Include destructive field adhesion testing of one sample of each combination of sealant type and substrate, except interior acrylic latex sealants, and include the following for each tested sample.
1. Identification of testing agency.
2. Preinstallation Field Adhesion Test Log Form: Include the following data fields, with known information filled out.
   a. Test date.
   b. Copy of test method documents.
   c. Age of sealant upon date of testing.
   d. Test results, modeled after the sample form in the test method document.
   e. Indicate use of photographic record of test.

E. Field Quality Control Plan:
1. Visual inspection of entire length of sealant joints.
2. Non-destructive field adhesion testing of sealant joints, except interior acrylic latex sealants.
3. Destructive field adhesion testing of sealant joints, except interior acrylic latex sealant.

NOT FOR BIDDING

a. For each different sealant and substrate combination, allow for one test every 100 feet in the first 1000 linear feet, and one test per 1000 linear feet thereafter, or once per floor on each elevation.
b. If any failures occur in the first 1000 linear feet, continue testing at frequency of one test per 500 linear feet at no extra cost to Owner.

4. Field testing agency's qualifications.
5. Field Quality Control Log Form: Show same data fields as on Preinstallation Field Adhesion Test Log, with known information filled out and lines for multiple tests per sealant/substrate combinations; include visual inspection and specified field testing; allow for possibility that more tests than minimum specified may be necessary.

F. Field Adhesion Test Procedures:
1. Allow sealants to fully cure as recommended by manufacturer before testing.
2. Have a copy of the test method document available during tests.
3. Record the type of failure that occurred, other information required by test method, and the information required on the Field Quality Control Log.
4. When performing destructive tests, also inspect the opened joints for proper installation characteristics recommended by manufacturer, and report any deficiencies.
5. Deliver the samples removed during destructive tests in separate sealed plastic bags, identified with project, location, test date, and test results to Owner.
6. If any combination of sealant type and substrate does not show evidence of minimum adhesion or shows cohesion failure before minimum adhesion, report results to Architect.

G. Non-Destructive Field Adhesion Test: Test for adhesion in accordance with ASTM C1521, using Nondestructive Spot Method.

H. Destructive Field Adhesion Test: Test for adhesion in accordance with ASTM C1521, using Destructive Tail Procedure.
1. Sample: At least 18 inch long.
2. Minimum Elongation Without Adhesive Failure: Consider the tail at rest, not under any elongation stress; multiply the stated movement capability of the sealant in percent by two; then multiply 1 inch by that percentage; if adhesion failure occurs before the "1 inch mark" is that distance from the substrate, the test has failed.
3. If either adhesive or cohesive failure occurs prior to minimum elongation, take necessary measures to correct conditions and re-test; record each modification to products or installation procedures.

1.06 WARRANTY

A. Correct defective work within a five year period after Date of Substantial Completion.

B. Warranty: Include coverage for installed sealants and accessories that fail to achieve watertight seal , exhibit loss of adhesion or cohesion, or do not cure.

**PART 2 - PRODUCTS**

2.01 JOINT SEALANT APPLICATIONS

A. Scope:
1. Exterior Joints: Seal open joints, whether or not the joint is indicated on drawings, unless specifically indicated not to be sealed. Exterior joints to be sealed include, but are not limited to, the following items.
a. Wall expansion and control joints.
b. Joints between door, window, and other frames and adjacent construction.
c. Joints between different exposed materials.

NOT FOR BIDDING

d. Openings below ledge angles in masonry.
e. Other joints indicated below.

2. Interior Joints: Do not seal interior joints unless specifically indicated to be sealed. Interior joints to be sealed include, but are not limited to, the following items.
   a. Joints between door, window, and other frames and adjacent construction.
   b. Joints between plumbing fixtures and adjacent construction.
3. In sound-rated wall and ceiling assemblies, gaps at electrical outlets, wiring devices, piping, and other openings; between wall/ceiling and other construction; and other flanking sound paths.
4. Do not seal the following types of joints.
   a. Intentional weepholes in masonry.
   b. Joints indicated to be treated with manufactured expansion joint cover or some other type of sealing device.
   c. Joints where sealant is specified to be provided by manufacturer of product to be sealed.
   d. Joints where installation of sealant is specified in another section.
   e. Joints between suspended panel ceilings/grid and walls.

B. Exterior Joints: Use non-sag non-staining silicone sealant, Type 1, unless otherwise indicated.

C. Interior Joints: Use non-sag acrylic latex sealant, Type 2, unless otherwise indicated.
1. Interior Expansion and Control Joints: Polyurethane sealant; Type 1A.
2. Interior Joints at windows, storefront and curtain wall: Polyurethane sealant; Type 1A.
3. Fire-rated Construction: ASTM C 834, UL listed.
4. In Sound-Rated Assemblies: Acoustical sealant; Type 5.
5. Type 7 - Narrow Control Joints in Interior Concrete Slabs Exposed to View: Self-leveling polyurea sealant.
6. Interior Wet Areas: Type 6 - Mildew-Resistant Silicone Sealant: not expected to withstand continuous water immersion or traffic. Bathrooms, restrooms, kitchens, food service areas, and food processing areas; fixtures in wet areas include plumbing fixtures, food service equipment, countertops, cabinets, and other similar items.

2.02 JOINT SEALANTS - GENERAL

A. Sealant Types Summary:
1. Type 1: Non-Staining Silicone.
2. Type 1A: Polyurethane.
3. Type 2: Acrylic Emulsion Latex
4. Type 3: Non-Curing Butyl Sealant
5. Type 4: Fire resistant foam sealant: Refer to Section 078400 - Firestopping.
6. Type 5: Acoustical Sealant
7. Type 6: Mildew-Resistant Silicone Sealant
8. Type 7: Self-Leveling Polurea Sealant

2.03 NONSAG JOINT SEALANTS

A. Type 1 - Non-Staining Silicone Sealant: ASTM C920, Grade NS, Uses M and A; not expected to withstand continuous water immersion or traffic.
1. Movement Capability: Plus 100 percent, minus 50 percent, minimum.
2. Non-Staining To Porous Stone: Non-staining to light-colored natural stone when tested in accordance with ASTM C1248.
3. Dirt Pick-Up: Reduced dirt pick-up compared to other silicone sealants.
4. Color: To be selected by Architect from manufacturer's standard range.

NOT FOR BIDDING

5. Cure Type: Single-component, neutral moisture curing.
6. Service Temperature Range: Minus 65 to 180 degrees F.
7. Manufacturers:
   a. Dow Chemical Company; 795 Silicone Building Sealant: consumer.dow.com/en-us/industry/ind-building-construction.html/#sle.
   b. Sika Corporation; Sikasil WS-295: www.usa-sika.com/#sle.
   c. Pecora Corporation; 890NST: www.pecora.com.
   d. Substitutions: See Section 016000 - Product Requirements.

B. Type 1A - Polyurethane Sealant: ASTM C920, Grade NS, Uses M and A; single component; not expected to withstand continuous water immersion or traffic.
1. Movement Capability: Plus and minus 25 percent, minimum.
2. Hardness Range: 20 to 35, Shore A, when tested in accordance with ASTM C661.
3. Color: To be selected by Architect from manufacturer's standard range.
4. Service Temperature Range: Minus 40 to 180 degrees F.
5. Manufacturers:
   a. Pecora Corporation; DynaTrol 1-XL: www.pecora.com.
   b. Sika Corporation; Sikaflex-15 LM: www.usa-sika.com/#sle.
   c. Tremco Commercial Sealants & Waterproofing; Dymonic 100: www.tremcosealants.com/#sle.
   d. Substitutions: See Section 016000 - Product Requirements.

C. Type 2 - Acrylic Emulsion Latex: Water-based; ASTM C834, single component, non-staining, non-bleeding, non-sagging; not intended for exterior use.

D. Type 3 - Non-Curing Butyl Sealant: Solvent-based; ASTM C1311; single component, non-sag, non-skinning, non-hardening, non-bleeding; vapor-impermeable; intended for fully concealed applications.

E. Type 4: Fire resistant foam sealant: Refer to Section 07 8400 - Firestopping.

F. Type 5 - Acoustical Sealant for Concealed Locations: ASTM C 834, UL Listed.
1. Composition: Acrylic latex emulsion sealant.
2. Applications: Use for concealed locations only:
   a. Acoustical application: Sealant bead between top stud runner and structure and between bottom stud track and floor.
3. Products:
   a. Pecora Corporation; AC-20 FTR Acoustical and Insulation Sealant: www.pecora.com.
   b. Hilti, Inc.; CP 506 Smoke and Acoustical Sealant: www.us.hilti.com.
   c. USG Company; Sheetrock Brand Acoustical Sealant; www.usg.com.

G. Type 6 - Mildew-Resistant Silicone Sealant: ASTM C920, Grade NS, Uses M and A; single component, mildew resistant; not expected to withstand continuous water immersion or traffic.
1. Color: White.
2. Manufacturers:
   a. Pecora Corporation: www.pecora.com.
   b. Sika Corporation; Sikasil GP: www.usa-sika.com.

2.04 SELF-LEVELING SEALANTS

A. Type 7 - Semi-Rigid Self-Leveling Polyurea Joint Filler: Two-component, 100 percent solids; intended for filling cracks and control joints not subject to significant movement; rigid enough to support concrete edges under traffic.

NOT FOR BIDDING

1. Durometer Hardness, Type A: 75, minimum, after seven days when tested in accordance with ASTM D2240.
2. Color: To be selected by Architect from manufacturer's standard colors.
3. Joint Width, Minimum: 1/8 inch.
4. Joint Width, Maximum: 3/4 inch.
5. Joint Depth: Provide product suitable for joints from 1/8 inch to 1 inch in depth excluding space for backer rod.
6. Manufacturers:
   a. Adhesives Technology Corporation; Crackbond JF-311: www.atcepoxy.com/#sle.
   b. ARDEX Engineered Cements; ARDEX ARDISEAL RAPID PLUS: www.ardexamericas.com/#sle.
   c. Euclid Chemical Company; EUCO QWIKjoint UVR: www.euclidchemical.com/#sle.
   d. Substitutions: See Section 016000 - Product Requirements.

**PART 3 EXECUTION**

3.01 EXAMINATION

A. Verify that joints are ready to receive work.

B. Verify that backing materials are compatible with sealants.

C. Preinstallation Adhesion Testing: Install a sample for each test location indicated in the test plan.
   1. Test each sample as specified in PART 1 under QUALITY ASSURANCE article.
   2. Notify Architect of date and time that tests will be performed, at least 7 days in advance.
   3. Record each test on Preinstallation Adhesion Test Log as indicated.
   4. If any sample fails, review products and installation procedures, consult manufacturer, or take whatever other measures are necessary to ensure adhesion; re-test in a different location; if unable to obtain satisfactory adhesion, report to Architect.
   5. After completion of tests, remove remaining sample material and prepare joint for new sealant installation.

3.02 PREPARATION

A. Remove loose materials and foreign matter that could impair adhesion of sealant.

B. Clean joints, and prime as necessary, in accordance with manufacturer's instructions.

C. Perform preparation in accordance with manufacturer's instructions and ASTM C1193.

D. Mask elements and surfaces adjacent to joints from damage and disfigurement due to sealant work; be aware that sealant drips and smears may not be completely removable.

3.03 INSTALLATION

A. Perform work in accordance with sealant manufacturer's requirements for preparation of surfaces and material installation instructions.

B. Perform installation in accordance with ASTM C1193.

C. Perform acoustical sealant application work in accordance with ASTM C919.

D. Measure joint dimensions and size joint backers to achieve the following, unless otherwise indicated:
   1. Width/depth ratio of 2:1.
   2. Neck dimension no greater than 1/3 of the joint width.
   3. Surface bond area on each side not less than 75 percent of joint width.

NOT FOR BIDDING

E. Install bond breaker backing tape where backer rod cannot be used.

F. Install sealant free of air pockets, foreign embedded matter, ridges, and sags, and without getting sealant on adjacent surfaces.

G. Do not install sealant when ambient temperature is outside manufacturer's recommended temperature range, or will be outside that range during the entire curing period, unless manufacturer's approval is obtained and instructions are followed.

H. Nonsag Sealants: Tool surface concave, unless otherwise indicated; remove masking tape immediately after tooling sealant surface.

I. Concrete Floor Joint Filler: After full cure, shave joint filler flush with top of concrete slab.

3.04 FIELD QUALITY CONTROL

A. Perform field quality control inspection/testing as specified in PART 1 under QUALITY ASSURANCE article.

B. Non-Destructive Adhesion Testing: If there are any failures in first 100 linear feet, notify Architect immediately.

C. Destructive Adhesion Testing: If there are any failures in first 1000 linear feet, notify Architect immediately.

D. Remove and replace failed portions of sealants using same materials and procedures as indicated for original installation.

E. Repair destructive test location damage immediately after evaluation and recording of results.

3.05 POST-OCCUPANCY

A. Post-Occupancy Inspection: Perform visual inspection of entire length of project sealant joints at a time that joints have opened to their greatest width; i.e. at low temperature in thermal cycle. Report failures immediately and repair.

**END OF SECTION**

NOT FOR BIDDING

# SECTION 079513
# EXPANSION JOINT COVER ASSEMBLIES

## PART 1 GENERAL

1.01 SECTION INCLUDES

A. Expansion joint assemblies for masonry wall, interior wall and ceiling surfaces.

1.02 RELATED REQUIREMENTS

A. Section 042000 - Unit Masonry: Placement of joint cover assembly frames in masonry.

B. Section 077100 - Roof Specialties: Roof expansion and control joint covers.

C. Section 092116 - Gypsum Board Assemblies: Placement of expansion joint assemblies in gypsum board walls and ceilings.

1.03 REFERENCE STANDARDS

A. ASTM B221 - Standard Specification for Aluminum and Aluminum-Alloy Extruded Bars, Rods, Wire, Profiles, and Tubes; 2014.

B. ASTM B221M - Standard Specification for Aluminum and Aluminum-Alloy Extruded Bars, Rods, Wire, Profiles, and Tubes (Metric); 2013.

C. ASTM B308/B308M - Standard Specification for Aluminum-Alloy 6061-T6 Standard Structural Profiles; 2010.

D. ITS (DIR) - Directory of Listed Products; current edition.

E. UL (DIR) - Online Certifications Directory; current listings at database.ul.com.

1.04 SUBMITTALS

A. See Section 013000 - Administrative Requirements, for submittal procedures.

B. Product Data: Provide joint assembly profiles, profile dimensions, available colors and finish.

C. Shop Drawings: Indicate joint and splice locations, miters, layout of the work, affected adjacent construction.

D. Samples: Submit two samples 6 inch long, illustrating profile, dimension, color, and finish selected.

E. Manufacturer's Installation Instructions: Indicate rough-in sizes and required tolerances for item placement.

F. Maintenance Materials: Furnish the following for Owner's use in maintenance of project.
   1. Extra Resilient Joint Filler: 20 ft length and any special tools required for installation.

## PART 2 PRODUCTS

2.01 MANUFACTURERS

A. Expansion Joint Cover Assemblies:
   1. Construction Specialties, Inc; (Basis of Design): www.c-sgroup.com.
   2. MM Systems Corp: www.mmsystemscorp.com.
   3. Emseal: www.emseal.com.
   4. Substitutions: See Section 016000 - Product Requirements.

2.02 EXPANSION JOINT COVER ASSEMBLIES

A. Expansion Joint Cover Assemblies - General: Factory-fabricated and assembled; designed to completely fill joint openings, sealed to prevent passage of air, dust, water, smoke; suitable for traffic expected.

NOT FOR BIDDING

1. Joint Dimensions and Configurations: As indicated on drawings.
2. Joint Cover Sizes: Selected to suit joint width and configuration, based on manufacturer's published recommendations and limitations.
3. Lengths: Provide covers in full lengths required; avoid splicing wherever possible.
4. Anchors, Fasteners, and Fittings: Provided by cover manufacturer.

B. Resilient Seal Type Covers: Having flat exposed surface without crevices that could collect dirt; designed to withstand expected movement without extrusion of seal from joint assembly; for floors, provide style that is flush with top of floor covering; for exterior joints, weathertight.

C. Covers In Gypsum Board Assemblies: Provide style with anchoring wings that can be completely covered by joint compound.

D. Covers In Fire Rated Assemblies: Provide cover assembly having fire rating equivalent to that of assembly into which it is installed.
1. Acceptable Evaluation Agencies: UL (DIR) and ITS (DIR).

2.03 ARCHITECTURAL JOINT SYSTEMS FOR EXTERIOR WALLS

A. Exterior Expansion Joint Sealer: Factory-applied low-modulous silicone, acrylic-impregnated expanding foam sealant and closed-cell (EVA) foam combined in a unified, binary sealant system.
1. Size as required to provide weathertight seal when installed.

2.04 MATERIALS

A. Seal Material: Silicone.
1. Color: As selected by Architect from manufacturer's standard range.

B. All miters and changes in direction to be field fabricated.

C. Extruded Aluminum: ASTM B221 (ASTM B221M), 6063 alloy, T6 temper; or ASTM B308/B308M, 6061 alloy, T6 temper.
1. Exposed Finish Outdoors: Superior Performing Organic Coating: multiple coat, thermally cured polyvinylidene fluoride system; Kynar 500 or Hylar 5000..
2. Exposed Finish at Walls and Ceilings: Natural anodized.

D. Resilient Seals:
1. For Ceilings: Any resilient material, flush, pleated, or hollow gasket.
2. For Pedestrian Traffic Applications: EPDM rubber, Neoprene, or Santoprene; no PVC; Shore A hardness of 40 to 50 Durometer.
3. Color: as selected from manufacturers standard range.

E. Anchors and Fasteners: As recommended by cover manufacturer.

F. Ferrous Metal Anchors: Galvanized where embedded in concrete or in contact with cementitious materials.

G. Threaded Fasteners: Stainless steel.

H. Backing Paint for Aluminum Components in Contact with Cementitious Materials: Asphaltic type.

**PART 3 EXECUTION**

3.01 EXAMINATION

A. Verify that joint preparation and dimensions are acceptable and in accordance with manufacturer's requirements.

NOT FOR BIDDING

3.02 PREPARATION

A. Prepare substrates according to architectural joint system manufacturer's written instructions.

B. Repair concrete slabs and blockouts using manufacturer's recommended repair grout of compressive strength adequate for anticipated structural loadings.

C. Coordinate and furnish anchorages, setting drawings, and instructions for installing joint systems. Provide fasteners of metal, type, and size to suit type of construction indicated and to provide for secure attachment of joint systems.

3.03 INSTALLATION

A. Install components and accessories in accordance with manufacturer's instructions.

B. Align work plumb and level, flush with adjacent surfaces.

C. Cut and fit ends to accommodate thermal expansion and contraction of metal without buckling of frames.

D. Locate in continuous contact with adjacent surfaces

E. Rigidly anchor to substrate to prevent misalignment. Locate anchors at interval recommended by manufacturer, but not less than 3 inches from each end and not more than 24 inches o.c.

F. Seals in Metal Frames: Install elastomeric seals and membranes in frames to comply with manufacturer's written instructions. Install with minimum number of end joints.

1. Provide in continuous lengths for straight sections.
2. Seal transitions according to manufacturer's written instructions. Vulcanize or heat-weld field-spliced joints as recommended by manufacturer.
3. Installation: Mechanically lock seals into frames or adhere to frames with adhesive or pressure-sensitive tape as recommended by manufacturer.

G. Compression Seals: Apply adhesive or lubricant adhesive as recommended by manufacturer before installing compression seals.

H. Fire-Resistance-Rated Assemblies: Coordinate installation of architectural joint assembly materials and associated work so complete assemblies comply with assembly performance requirements.

1. Fire Barriers: Install fire barriers to provide continuous, uninterrupted fire resistance throughout length of joint, including transitions and field splices.

3.04 PROTECTION

A. Do not permit traffic over unprotected floor joint surfaces.

B. Provide strippable coating to protect finish surface.

3.05 SCHEDULE

A. Wall Joints at Exterior Walls:

Emseal, Model WFR2, or Construction Specialties, Inc., Model VF with fire barrier.

2. Joint width: 2"
3. Fire barrier: 2 hour rating

B. Wall Joints at Interior Walls:

1. Construction Specialties, Inc., Model FWF
2. Use complementing joint covers FWFC, FWFM as applicable
3. Joint width: 2"
4. Fire barrier: 2 hour rating

C. Wall Joints at Interior Ceilings:

NOT FOR BIDDING

1. Construction Specialties, Inc., Model FCF
2. Use complementing joint covers FWFC, FCFC, FWF as applicable
3. Joint width: 2"
4. Fire barrier: 2 hour rating

D. Roof Joints at EPDM Roof areas: See Section 077100 - Roof Specialties.

**END OF SECTION**

NOT FOR BIDDING

# SECTION 081113
# HOLLOW METAL DOORS AND FRAMES

## PART 1 GENERAL

1.01 SECTION INCLUDES

A. Non-fire-rated hollow metal doors and frames.

B. Hollow metal frames for wood doors.

C. Fire-rated hollow metal doors and frames.

D. Hollow metal borrowed lites glazing frames.

1.02 RELATED REQUIREMENTS

A. Section 087100 - Door Hardware.

B. Section 088000 - Glazing: Glass for doors and borrowed lites.

1.03 ABBREVIATIONS AND ACRONYMS

A. ANSI - American National Standards Institute.

B. HMMA - Hollow Metal Manufacturers Association.

C. NAAMM - National Association of Architectural Metal Manufacturers.

D. NFPA - National Fire Protection Association.

E. SDI - Steel Door Institute.

F. UL - Underwriters Laboratories.

1.04 REFERENCE STANDARDS

A. ADA Standards - Americans with Disabilities Act (ADA) Standards for Accessible Design; 2010.

B. ANSI/SDI A250.4 - Test Procedure and Acceptance Criteria for Physical Endurance for Steel Doors, Frames and Frame Anchors; 2011.

C. ANSI/SDI A250.8 - Specifications for Standard Steel Doors and Frames (SDI-100); 2014.

D. ASTM A653/A653M - Standard Specification for Steel Sheet, Zinc-Coated (Galvanized) or Zinc-Iron Alloy-Coated (Galvannealed) by the Hot-Dip Process; 2015.

E. ASTM A1008/A1008M - Standard Specification for Steel, Sheet, Cold-Rolled, Carbon, Structural, High-Strength Low-Alloy, High-Strength Low-Alloy with Improved Formability, Solution Hardened, and Bake Hardenable; 2016.

F. ASTM A1011/A1011M - Standard Specification for Steel, Sheet and Strip, Hot-Rolled, Carbon, Structural, High-Strength Low-Alloy, High-Strength Low-Alloy with Improved Formability, and Ultra-High Strength; 2015.

G. HMMA A156.115 - American National Standard for Hardware Preparation in Steel Doors and Steel Frames; 2014.

H. ICC A117.1 - Accessible and Usable Buildings and Facilities; 2009.

I. ITS (DIR) - Directory of Listed Products; current edition.

J. NAAMM HMMA 830 - Hardware Selection for Hollow Metal Doors and Frames; 2002.

K. NAAMM HMMA 831 - Hardware Locations for Hollow Metal Doors and Frames; 2011.

L. NAAMM HMMA 840 - Guide Specifications for Installation and Storage of Hollow Metal Doors and Frames; 2007.

NOT FOR BIDDING

M. NAAMM HMMA 861 - Guide Specifications for Commercial Hollow Metal Doors and Frames; 2006.

N. NFPA 80 - Standard for Fire Doors and Other Opening Protectives; 2016.

O. NFPA 105 - Standard for Smoke Door Assemblies and Other Opening Protectives; 2016.

P. NFPA 252 - Standard Methods of Fire Tests of Door Assemblies; 2012.

Q. SDI 117 - Manufacturing Tolerances for Standard Steel Doors and Frames; 2013.

R. UL (DIR) - Online Certifications Directory; current listings at database.ul.com.

S. UL 10C - Standard for Positive Pressure Fire Tests of Door Assemblies; Current Edition, Including All Revisions.

T. UL 1784 - Standard for Air Leakage Tests of Door Assemblies; Current Edition, Including All Revisions.

1.05 SUBMITTALS

A. Product Data: Materials and details of design and construction, hardware locations, reinforcement type and locations, anchorage and fastening methods, and finishes.

B. Shop Drawings: Details of each opening, showing elevations, glazing, frame profiles, and any indicated finish requirements.

C. Installation Instructions: Manufacturer's published instructions, including any special installation instructions relating to this project.

D. Manufacturer's Certificate: Certification that products meet or exceed specified requirements.

E. Manufacturer's Qualification Statement.

1.06 QUALITY ASSURANCE

A. Manufacturer Qualifications: Company specializing in manufacturing products specified in this section, with not less than three years documented experience.

1. Provide hollow metal frames from SDI Certified manufacturer.

B. Maintain at project site copies of reference standards relating to installation of products specified.

1.07 DELIVERY, STORAGE, AND HANDLING

A. Comply with NAAMM HMMA 840 or ANSI/SDI A250.8 (SDI-100) in accordance with specified requirements.

B. Protect with resilient packaging; avoid humidity build-up under coverings; prevent corrosion and adverse effects on factory applied painted finish.

**PART 2 PRODUCTS**

2.01 MANUFACTURERS

A. Hollow Metal Doors and Frames:

1. Ceco Door, an Assa Abloy Group company: www.assaabloydss.com.
2. De La Fontaine Inc: www.delafontaine.com.
3. Republic Doors: www.republicdoor.com.
4. Steelcraft, an Allegion brand: www.allegion.com/sle.
5. Technical Glass Products: www.tgpamerica.com.
6. Substitutions: See Section 016000 - Product Requirements.

2.02 DESIGN CRITERIA

A. Requirements for Hollow Metal Doors and Frames:

NOT FOR BIDDING

1. Steel used for fabrication of doors and frames shall comply with one or more of the following requirements; Galvannealed steel conforming to ASTM A653/A653M, cold-rolled steel conforming to ASTM A1008/A1008M, or hot-rolled pickled and oiled (HRPO) steel conforming to ASTM A1011/A1011M, Commercial Steel (CS) Type B for each.
2. Accessibility: Comply with ICC A117.1 and ADA Standards.

B. Materials
1. Doors and frames to be constructed from formed sheet steel or structural shapes and bars.
   a. Cold-Rolled Steel Sheet: ASTM A 1008/A 1008M, Commercial Steel (CS), Type B; suitable for exposed applications.
   b. Metallic-Coated Steel Sheet: ASTM A 653/A 653M, Commercial Steel (CS), Type B; with minimum G60 (Z180) or A60 (ZF180) metallic coating.
   c. Frame Anchors: ASTM A 653/A 653M, Commercial Steel (CS), Commercial Steel (CS), Type B; with minimum G60 (Z180) or A60 (ZF180) metallic coating.
2. Top and Bottom Edges: Reinforce tops and bottoms of doors with a continuous steel channel not less than 16 gauge, extending the full width of the door and welded to the face sheet. Doors with an inverted top channel to include a steel closure channel, screw attached, with the web of the channel flush with the face sheets of the door.
3. Door Edge Profile: Hinged edge square, and lock edge beveled.
4. Typical Door Face Sheets: Flush. Refer to Door Schedule for additional information.
5. Glazed Lights: Non-removable stops on non-secure side; sizes and configurations as indicated on drawings. Style: Manufacturer's standard.
6. Hardware Preparations, Selections and Locations: Comply with NAAMM HMMA 830 and NAAMM HMMA 831 or BHMA A156.115 and ANSI/SDI A250.8 (SDI-100) in accordance with specified requirements.
   a. Hinge Reinforcement: Minimum 7 gauge (3/16") plate 1-1/4" x 9" or minimum 14 gauge continuous channel with pierced holes, drilled and tapped.
   b. Hardware Reinforcement: Fabricate according to ANSI/SDI A250.6 with reinforcing plates from same material as door face sheets
7. Zinc Coating for Typical Exterior Locations: Provide metal components zinc-coated (galvanized) and/or zinc-iron alloy-coated (galvannealed) by the hot-dip process in accordance with ASTM A653/A653M, with manufacturer's standard coating thickness, unless noted otherwise for specific hollow metal doors and frames.

C. Combined Requirements: If a particular door and frame unit is indicated to comply with more than one type of requirement, comply with the specified requirements for each type; for instance, an exterior door that is also indicated as being sound-rated must comply with the requirements specified for exterior doors and for sound-rated doors; where two requirements conflict, comply with the most stringent.

03. FABRICATION

A. Fabricate hollow metal work to be rigid and free of defects, warp, or buckle. Accurately form metal to required sizes and profiles, with minimum radius for thickness of metal. Where practical, fit and assemble units in manufacturer's plant. When shipping limitations so dictate, frames for large openings are to be fabricated in sections for splicing or splining in the field by others.

B. Tolerances: Fabricate hollow metal work to tolerances indicated in ANSI/SDI A250.8.

NOT FOR BIDDING

## 2.04 HOLLOW METAL DOORS

A. Glazed Lites: Factory cut openings in doors with applied trim or kits to fit. Factory install glazing where indicated.

B. Astragals: Provide overlapping astragals as noted in door hardware sets in Division 08 Section "Door Hardware" on one leaf of pairs of doors where required by NFPA 80 for fire-performance rating or where indicated. Extend minimum 3/4 inch beyond edge of door on which astragal is mounted.

C. Continuous Hinge Reinforcement: Provide welded continuous 12 gauge strap for continuous hinges specified in hardware sets in Division 08 Section "Door Hardware".

D. Electrical Raceways: Provide hollow metal doors to receive electrified hardware with concealed wiring harness and standardized Molex™ plug connectors on both ends to accommodate up to twelve wires. Coordinate connectors on end of the wiring harness to plug directly into the electrified hardware and the through-wire transfer hardware or wiring harness specified in hardware sets in Division 08 Sections "Door Hardware" and "Access Control Hardware". Wire nut connections are not acceptable.

E. Door Finish: Factory primed and field finished.

F. Interior Doors, Non-Fire Rated:
   1. Based on SDI Standards: ANSI/SDI A250.8 (SDI-100).
      a. Level 3 - Extra Heavy-duty.
      b. Physical Performance Level A, 1,000,000 cycles; in accordance with ANSI/SDI A250.4.
      c. Model 2 - Seamless.
      d. Door Face Metal Thickness: 16 gage, 0.053 inch, minimum.
      e. Zinc Coating: A60/ZF180 galvannealed coating; ASTM A653/A653M, at wet locations.
   2. Door Thickness: 1-3/4 inch, nominal.
   3. Top and Bottom Closures: Flush with top of faces and edges.

G. Fire-Rated Doors:
   1. Based on SDI Standards: ANSI/SDI A250.8 (SDI-100).
      a. Level 3 - Extra Heavy-duty.
      b. Physical Performance Level A, 1,000,000 cycles; in accordance with ANSI/SDI A250.4.
      c. Model 2 - Seamless.
      d. Door Face Metal Thickness: 16 gage, 0.053 inch, minimum.
   2. Fire Rating: As indicated on Door Schedule, tested in accordance with UL 10C and NFPA 252 ("positive pressure fire tests").
   3. Temperature-Rise Rating (TRR) Across Door Thickness: In accordance with local building code and authorities having jurisdiction.
   4. Provide units listed and labeled by UL (DIR) or ITS (DIR).
      a. Attach fire rating label to each fire rated unit.
   5. Smoke and Draft Control Doors (Indicated with letter "S" on Drawings and/or Door Schedule): Self-closing or automatic closing doors in accordance with NFPA 80 and NFPA 105, with fire-resistance-rated wall construction rated the same or greater than the fire-rated doors, and the following;
      a. Maximum Air Leakage: 3.0 cfm/sq ft of door opening at 0.10 inch w.g. pressure, when tested in accordance with UL 1784 at both ambient and elevated temperatures.

NOT FOR BIDDING

b. Gasketing: Provide gasketing or edge sealing as necessary to achieve leakage limit.
c. Label: Include the "S" label on fire-rating label of door.

6. Door Thickness: 1-3/4 inch, nominal.
7. Top and Bottom Closures: Flush with top of faces and edges.

2.05 HOLLOW METAL FRAMES

A. Shipping Limitations: Where frames are fabricated in sections due to shipping or handling limitations, provide alignment plates or angles at each joint, fabricated of same thickness metal as frames.

B. Welded Frames: Weld flush face joints continuously; grind, fill, dress, and make smooth, flush, and invisible.
   1. Welded frames are to be provided with two steel spreaders temporarily attached to the bottom of both jambs to serve as a brace during shipping and handling. Spreader bars are for bracing only and are not to be used to size the frame opening.

C. Comply with standards and/or custom guidelines as indicated for corresponding door in accordance with applicable door frame requirements.

D. Frame Finish: Factory primed and field finished.

E. Interior Door Frames, Non-Fire Rated: Full profile/continuously welded type.
   1. Frame Metal Thickness: 16 gage, 0.053 inch, minimum.

F. Door Frames, Fire-Rated: Full profile/continuously welded type.
   1. Fire Rating: Same as door, labeled.
   2. Frame Metal Thickness: 16 gage, 0.053 inch, minimum.

G. Frames for Wood Doors: Comply with frame requirements in accordance with corresponding door.
   1. Frame Metal Thickness: 16 gage, 0.053 inch, minimum.

H. Borrowed Lites Glazing Frames: Construction and face dimensions to match door frames, and as indicated on drawings.
   1. Provide close tubular members with no visible face seams or joints, fabricated from same material as door frame.
   2. Fasten members at crossings and to jambs by butt welding.

I. Transom Bars: Fixed, of profile same as jamb and head.

J. Mortar Guards: Provide guard boxes at back of hardware mortises in frames at all hinges and strike preps regardless of grouting requirements.

K. Frames in Masonry Walls: Size to suit masonry coursing with head member 2 inch high to fill opening without cutting masonry units.

L. Frames Wider than 48 inches: Reinforce with steel channel fitted tightly into frame head, flush with top.
   1. Provide high frequency hinge reinforcements at door openings 48-inches and wider with mortise butt type hinges at top hinge locations.

M. Frames Installed Back-to-Back: Reinforce with steel channels anchored to floor and overhead structure.

N. Continuous Hinge Reinforcement: Provide welded continuous 12 gauge straps for continuous hinges specified in hardware sets in Division 08 Section "Door Hardware".

O. Provide countersunk, flat- or oval-head exposed screws and bolts for exposed fasteners unless otherwise indicated for removable stops, provide security screws at exterior locations.

NOT FOR BIDDING

P. Electrical Thru-Wiring: Provide hollow metal frames receiving electrified hardware with loose wiring harness (not attached to open throat components or installed in closed mullion tubes) and standardized Molex™ plug connectors on one end to accommodate up to twelve wires. Coordinate connectors on end of the wiring harness to plug directly into the electric through-wire transfer hardware or wiring harness specified in hardware sets in Division 08 Sections "Door Hardware" and "Access Control Hardware".

Q. Electrical Knock Out Boxes: Factory weld 18 gauge electrical knock out boxes to frame for electrical hardware preps; including but not limited to, electric through wire transfer hardware, electrical raceways and wiring harnesses, door position switches, electric strikes, magnetic locks, and jamb mounted card readers as specified in hardware sets in Division 08 Sections "Door Hardware" and "Access Control Hardware".
   1. Provide electrical knock out boxes with a dual 1/2-inch and 3/4-inch knockouts.
   2. Conduit to be coordinated and installed in the field (Division 26) from middle hinge box and strike box to door position box.
   3. Electrical knock out boxes to comply with NFPA requirements and for electrical door hardware as specified in hardware sets in Division 08 Section "Door Hardware".
   4. Electrical knock out boxes for continuous hinges should be located in the center of the vertical dimension on the hinge jamb.

R. Floor Anchors: Weld anchors to bottom of jambs and mullions with at least four spot welds per anchor.

S. Jamb Anchors: Provide number and spacing of anchors as follows:
   1. Masonry Type: Locate anchors not more than 18 inches from top and bottom of frame. Space anchors not more than 32 inches o.c. and as follows:
      a. Two anchors per jamb up to 60 inches high.
      b. Three anchors per jamb from 60 to 90 inches high.
      c. Four anchors per jamb from 90 to 120 inches high.
      d. Four anchors per jamb plus 1 additional anchor per jamb for each 24 inches or fraction thereof above 120 inches high.
   2. Stud Wall Type: Locate anchors not more than 18 inches from top and bottom of frame. Space anchors not more than 32 inches o.c. and as follows:
      a. Three anchors per jamb up to 60 inches high.
      b. Four anchors per jamb from 60 to 90 inches high.
      c. Five anchors per jamb from 90 to 96 inches high.
      d. Five anchors per jamb plus 1 additional anchor per jamb for each 24 inches or fraction thereof above 96 inches high.
      e. Two anchors per head for frames above 42 inches wide and mounted in metal stud partitions.

T. Door Silencers: Except on weatherstripped or gasketed doors, drill stops to receive door silencers. Silencers to be supplied by frame manufacturer regardless if specified in Division 08 Section "Door Hardware".

U. Bituminous Coating: Where frames are fully grouted with an approved Portland Cement based grout or mortar, coat inside of frame throat with a water based bituminous or asphaltic emulsion coating to a minimum thickness of 3 mils DFT, tested in accordance with UL 10C and applied to the frame under a 3rd party independent follow-up service procedure.

NOT FOR BIDDING

2.06 FINISHES

A. Prime Finishes: Doors and frames to be cleaned, and chemically treated to insure maximum finish paint adhesion. Surfaces of the door and frame exposed to view to receive a factory applied coat of rust inhibiting shop primer.
   1. Shop Primer: Manufacturer's standard, fast-curing, lead and chromate free primer complying with ANSI/SDI A250.10 acceptance criteria; recommended by primer manufacturer for substrate; and compatible with substrate and field-applied coatings.

2.07 ACCESSORIES

A. Glazing: As specified in Section 088000.

B. Removable Stops: Formed sheet steel, shape as indicated on drawings, butted corners, prepared for countersink style tamper proof screws.

C. Grout for Frames: Portland cement grout with maximum 4 inch slump for hand troweling; thinner pumpable grout is prohibited.

D. Silencers: Resilient rubber, fitted into drilled hole; provide three on strike side of single door, three on center mullion of pairs, and two on head of pairs without center mullions.

E. Temporary Frame Spreaders: Provide for factory- or shop-assembled frames.

**PART 3 EXECUTION**

3.01 EXAMINATION

A. Verify existing conditions before starting work.

B. Verify that opening sizes and tolerances are acceptable.

C. Verify that finished walls are in plane to ensure proper door alignment.

3.02 PREPARATION

A. Coat inside of frames to be installed in masonry or to be grouted, with bituminous coating, prior to installation.

B. Remove welded-in shipping spreaders installed at factory. Restore exposed finish by grinding, filling, and dressing, as required to make repaired area smooth, flush, and invisible on exposed faces.

C. Prior to installation, adjust and securely brace welded hollow metal frames for square, level, twist, and plumb condition.

D. Tolerances shall comply with SDI-117 "Manufacturing Tolerances Standard Steel Doors and Frames."

E. Drill and tap doors and frames to receive non-template, mortised, and surface-mounted door hardware.

3.03 INSTALLATION

A. Install doors and frames in accordance with manufacturer's instructions and related requirements of specified door and frame standards or custom guidelines indicated.

B. Install fire rated units in accordance with NFPA 80.

C. Coordinate frame anchor placement with wall construction.

D. Grout frames in masonry construction, using hand trowel methods; brace frames so that pressure of grout before setting will not deform frames.

E. Install door hardware as specified in Section 087100.

NOT FOR BIDDING

F. Comply with glazing installation requirements of Section 088000.

G. Hollow Metal Frames: Install hollow metal frames of size and profile indicated. Comply with ANSI/SDI A250.11 and NFPA 80 at fire rated openings.
   1. Set frames accurately in position, plumbed, leveled, aligned, and braced securely until permanent anchors are set. After wall construction is complete and frames properly set and secured, remove temporary braces, leaving surfaces smooth and undamaged. Shim as necessary to comply with installation tolerances.
   2. Floor Anchors: Provide floor anchors for each jamb and mullion that extends to floor, and secure with post-installed expansion anchors.
   3. Masonry Walls: Coordinate installation of frames to allow for solidly filling space between frames and masonry with mortar.
   4. Grout Requirements: Do not grout head of frames unless reinforcing has been installed in head of frame. Do not grout vertical or horizontal closed mullion members.

H. Hollow Metal Doors: Fit hollow metal doors accurately in frames within clearances specified below. Shim as necessary.

I. Prime-Coat and Painted Finish Touchup: Immediately after erection, sand smooth rusted or damaged areas of prime coat, or painted finishes, and apply touchup of compatible air drying, rust-inhibitive primer, zinc rich primer (exterior and galvanized openings) or finish paint.

3.04 TOLERANCES

A. Clearances Between Door and Frame: Comply with related requirements of specified frame standards or custom guidelines indicated in accordance with SDI 117 or NAAMM HMMA 861.
   1. Non-Fire-Rated Standard Steel Doors:
      a. Jambs and Head: 1/8 inch plus or minus 1/16 inch.
      b. Between Edges of Pair of Doors: 1/8 inch plus or minus 1/16 inch.
      c. Between Bottom of Door and Top of Threshold: Maximum 3/8 inch.
      d. Between Bottom of Door and Top of Finish Floor (No Threshold): Maximum 3/4 inch.
   2. Fire-Rated Doors: Install doors with clearances according to NFPA 80.

B. Maximum Diagonal Distortion: 1/16 inch measured with straight edge, corner to corner.

3.05 ADJUSTING AND CLEANING

A. Remove grout and other bonding material from hollow metal work immediately after installation.

B. Adjust for smooth and balanced door movement.

C. Test sound control doors for force to close, latch, and unlatch; adjust as necessary in compliance with requirements.

D. Final Adjustments: Check and readjust operating hardware items immediately before final inspection. Leave work in complete and proper operating condition. Remove and replace defective work, including hollow metal work that is warped, bowed, or otherwise unacceptable

3.06 SCHEDULE

A. Refer to Door and Frame Schedule on the drawings.

**END OF SECTION**

NOT FOR BIDDING

# SECTION 081416
# FLUSH WOOD DOORS

## PART 1 GENERAL

1.01 SECTION INCLUDES

A. Flush wood doors; flush configuration; fire rated, non-rated, and acoustical as scheduled.

1.02 RELATED REQUIREMENTS

A. Section 062000 - Finish Carpentry: Installing wood doors.

B. Section 081113 - Hollow Metal Doors and Frames.

C. Section 087100 - Door Hardware.

D. Section 088000 - Glazing.

1.03 REFERENCE STANDARDS

A. ANSI A135.4 - American National Standard for Basic Hardboard; 2012.

B. ASTM E90 - Standard Test Method for Laboratory Measurement of Airborne Sound Transmission Loss of Building Partitions and Elements; 2009 (Reapproved 2016).

C. ASTM E413 - Classification for Rating Sound Insulation; 2016.

D. NFPA 80 - Standard for Fire Doors and Other Opening Protectives; 2016.

E. NFPA 252 - Standard Methods of Fire Tests of Door Assemblies; 2012.

F. UL 10B - Standard for Fire Tests of Door Assemblies; Current Edition, Including All Revisions.

G. UL 10C - Standard for Positive Pressure Fire Tests of Door Assemblies; Current Edition, Including All Revisions.

H. UL 1784 - Standard for Air Leakage Tests of Door Assemblies; Current Edition, Including All Revisions.

I. WDMA I.S. 1A - Interior Architectural Wood Flush Doors; 2013.

1.04 SUBMITTALS

A. See Section 013000 - Administrative Requirements, for submittal procedures.

B. Product Data: Indicate door core materials and construction; veneer species, type and characteristics.

C. Shop Drawings: Show doors and frames, elevations, sizes, types, swings, undercuts, beveling, blocking for hardware, factory machining, factory finishing, cutouts for glazing and other details.

D. Samples: Submit two samples of door construction, 12 by 12 inch in size cut from top corner of door.

E. Samples: Submit two samples of door veneer, 12 by 12 inch in size illustrating wood grain, stain color, and sheen.

F. Certificate: Submit labels and certificates required by quality assurance and quality control programs.

G. Test Reports: Show compliance with specified requirements for the following:
   1. Sound-retardant doors and frames; sealed panel tests are not acceptable.

H. Manufacturer's Installation Instructions: Indicate special installation instructions.

I. Specimen warranty.

NOT FOR BIDDING

J. Warranty, executed in Owner's name.

1.05 QUALITY ASSURANCE

A. Manufacturer Qualifications: Company specializing in manufacturing the products specified in this section, with not less than three years of documented experience.

B. Installer Qualifications: Company specializing in performing work of the type specified in this section, with not less than three years of documented experience.

1.06 DELIVERY, STORAGE, AND HANDLING

A. Package, deliver and store doors in accordance with specified quality standard.

B. Accept doors on site in manufacturer's packaging. Inspect for damage.

C. Protect doors with resilient packaging sealed with heat shrunk plastic. Do not store in damp or wet areas; or in areas where sunlight might bleach veneer. Seal top and bottom edges with tinted sealer if stored more than one week. Break seal on site to permit ventilation.

1.07 PROJECT CONDITIONS

A. Coordinate the work with door opening construction, door frame and door hardware installation.

1.08 WARRANTY

A. Interior Doors: Provide manufacturer's warranty for the life of the installation.

B. Include coverage for delamination of veneer, warping beyond specified installation tolerances, defective materials, telegraphing core construction, and other possible defects.

**PART 2 PRODUCTS**

2.01 MANUFACTURERS

A. Wood Veneer Faced Doors:
   1. Graham Wood Doors: www.grahamdoors.com.
   2. Marshfield DoorSystems, Inc: www.marshfielddoors.com.
   3. Algoma Hardware.
   4. Oshkosh Architectural Door Company.
   5. VT Industries, Inc: www.vtindustries.com.
   6. Substitutions: See Section 016000 - Product Requirements.

2.02 DOORS

A. Doors: Refer to drawings for locations and additional requirements.
   1. Quality Standard: Custom Grade, Heavy Duty performance, in accordance with WDMA I.S. 1A.
   2. Wood Veneer Faced Doors: 5-ply unless otherwise indicated.

B. Interior Doors: 1-3/4 inches (44 mm) thick unless otherwise indicated; flush construction.
   1. Provide solid core doors at each location.
   2. Fire Rated Doors: Tested to ratings indicated on drawings in accordance with UL 10C - Positive Pressure; Underwriters Laboratories Inc (UL) or Intertek/Warnock Hersey (WHI) labeled without any visible seals when door is open.
   3. Sound Retardant Doors: Minimum STC of 45, calculated in accordance with ASTM E413, tested in accordance with ASTM E90.
   4. Wood veneer facing with factory transparent finish .

NOT FOR BIDDING

2.03 DOOR AND PANEL CORES

A. Non-Rated Solid Core and 20 Minute Rated Doors: Type structural composite lumber core (SCLC), plies and faces as indicated.

B. Fire-Rated Doors: Mineral core type, with fire resistant composite core (FD), plies and faces as indicated above; with core blocking as required to provide adequate anchorage of hardware without through-bolting.

C. Sound-Rated Doors: Equivalent to type, with particleboard core (PC) construction as required to achieve STC rating specified; plies and faces as indicated above.

2.04 DOOR FACINGS

A. Veneer Facing for Transparent Finish: Select white maple, veneer grade in accordance with quality standard indicated, quarter cut, with book match between leaves of veneer, running match of spliced veneer leaves assembled on door or panel face.
   1. Vertical Edges: Any option allowed by quality standard for grade.
   2. Pairs: Pair match each pair; set match pairs within 10 feet (3 m) of each other when doors are closed.

B. Facing Adhesive: Type I - waterproof or Type II - water resistant.

2.05 DOOR CONSTRUCTION

A. Fabricate doors in accordance with door quality standard specified.

B. Cores Constructed with stiles and rails:
   1. Provide solid blocks at lock edge and top of door for closer for hardware reinforcement.
   2. Provide solid blocking for other through-bolted hardware.

C. Factory machine doors for hardware other than surface-mounted hardware, in accordance with hardware requirements and dimensions.

D. Factory fit doors for frame opening dimensions identified on shop drawings, with edge clearances in accordance with specified quality standard.

E. Provide edge clearances in accordance with the quality standard specified.

2.06 FACTORY FINISHING - WOOD VENEER DOORS

A. Meet or exceed WDMA I.S. 1-A-04 specifications for a TR-6 catalyzed polyurethane finish system. Factory finish to be water based stain and UV curable polyester urethane finish system that complies with all applicable Federal and State regulations for Volatile Organic Compounds (VOC) and Hazardous Air Pollutants (HAP) emission limitations per the EPA Clean Air Act.

B. Finish work in accordance with WDMA I.S. 1A for grade specified and as follows:
   1. Transparent:
      a. System - TR-6, Catalyzed Polyurethane.
      b. Stain: As selected by Architect.
      c. Sheen: Satin.

C. Factory finish doors in accordance with approved sample.

D. Seal door top edge with color sealer to match door facing.

2.07 ACCESSORIES

A. Glazing: As specified in Section 088000.

B. Glazing Stops: Wood, of same species as door facing, mitered corners; prepared for countersink style tamper proof screws.

NOT FOR BIDDING

1. At fire-rated doors, veneer wrap fire-rated flush glazing bead with same species as door facing.
2. Where vision lite sizes exceed those tested for manufacturer's tested glazing bead, provide veneer-wrapped metal door lite frame by All Metal Stamping, Inc.: www.allmetalstamping.com, that meets opening requirements.
3. Verify that glazing stops do not interfere with mounting or operation of finish door hardware.

C. Door Hardware: As specified in Section 087100.

**PART 3 EXECUTION**

3.01 EXAMINATION

A. Verify existing conditions before starting work.

B. Verify that opening sizes and tolerances are acceptable.

C. Do not install doors in frame openings that are not plumb or are out-of-tolerance for size or alignment.

3.02 INSTALLATION

A. Install doors in accordance with manufacturer's instructions and specified quality standard.
   1. Install fire-rated doors in accordance with NFPA 80 requirements.

B. Factory-Finished Doors: Do not field cut or trim; if fit or clearance is not correct, replace door.

C. Use machine tools to cut or drill for hardware.

D. Coordinate installation of doors with installation of frames and hardware.

E. Coordinate installation of glazing.

F. Install door louvers plumb and level.

3.03 TOLERANCES

A. Conform to specified quality standard for fit and clearance tolerances.

B. Conform to specified quality standard for telegraphing, warp, and squareness.

C. Maximum Vertical Distortion (Bow): 1/8 inch (3 mm) measured with straight edge or taut string, top to bottom, over an imaginary 36 by 84 inches (915 by 2130 mm) surface area.

D. Maximum Width Distortion (Cup): 1/8 inch (3 mm) measured with straight edge or taut string, edge to edge, over an imaginary 36 by 84 inches (915 by 2130 mm) surface area.

3.04 ADJUSTING

A. Adjust doors for smooth and balanced door movement.

B. Adjust closers for full closure.

**END OF SECTION**

NOT FOR BIDDING

# SECTION 081613
# FRP FLUSH DOORS

## PART 1 - GENERAL

1.01 SECTION INCLUDES

A. Fiberglass reinforced polyester (FRP) flush doors in aluminum storefront frames.

1.02 RELATED SECTIONS

A. Section 087100 - Door Hardware.

B. Section 084100 - Metal Framed Storefronts

1.03 REFERENCES

A. AAMA 1503-98 - Thermal Transmittance and Condensation Resistance of Windows, Doors and Glazed Wall Sections.

B. ANSI A250.4 - Test Procedure and Acceptance Criteria for Physical Endurance for Steel Doors and Hardware Reinforcings.

C. ASTM B 117 - Operating Salt Spray (Fog) Apparatus.

D. ASTM B 209 - Aluminum and Aluminum-Alloy Sheet and Plate.

E. ASTM B 221 - Aluminum-Alloy Extruded Bars, Rods, Wire, Profiles, and Tubes.

F. ASTM D 256 - Determining the Pendulum Impact Resistance of Notched Specimens of Plastics.

G. ASTM D 543 - Evaluating the Resistance of Plastics to Chemical Reagents.

H. ASTM D 570 - Water Absorption of Plastics.

I. ASTM D 638 - Tensile Properties of Plastics.

J. ASTM D 790 - Flexural Properties of Unreinforced and Reinforced Plastics and Electrical Insulating Materials.

K. ASTM D 1621 - Compressive Properties of Rigid Cellular Plastics.

L. ASTM D 1623 - Tensile and Tensile Adhesion Properties of Rigid Cellular Plastics.

M. ASTM D 2126 - Response of Rigid Cellular Plastics to Thermal and Humid Aging.

N. ASTM D 2583 - Indentation Hardness of Rigid Plastics by Means of a Barcol Impressor.

O. ASTM D 5420 - Impact Resistance of Flat Rigid Plastic Specimens by Means of a Falling Weight.

P. ASTM D 6670-01 - Standard Practice for Full-Scale Chamber Determination of Volatile Organic Emissions from Indoor Materials/Products.

Q. ASTM E 84 - Surface Burning Characteristics of Building Materials.

R. ASTM E 90 - Laboratory Measurement of Airborne Sound Transmission Loss of Building Partitions.

S. ASTM E 283 - Determining the Rate of Air Leakage Through Exterior Windows, Curtain Walls, and Doors Under Specified Pressure Differences Across the Specimen.

T. ASTM E 330 - Structural Performance of Exterior Windows, Curtain Walls, and Doors by Uniform Static Air Pressure Difference.

U. ASTM E 331 - Water Penetration of Exterior Windows, Skylights, Doors, and Curtain Walls by Uniform Static Air Pressure Difference.

NOT FOR BIDDING

V. ASTM F 476 - Security of Swinging Door Assemblies.

W. SFBC PA 201 - Impact Test Procedures.

X. SFBC PA 203 - Criteria for Testing Products Subject to Cyclic Wind Pressure Loading.

Y. SFBC 3603.2 (b)(5) - Forced Entry Resistance Test.

1.04 PERFORMANCE REQUIREMENTS

A. General: Provide door assemblies that have been designed and fabricated to comply with specified performance requirements, as demonstrated by testing manufacturer's corresponding standard systems.

B. Air Infiltration: For a single door 3'-0" x 7'-0", test specimen shall be tested in accordance with ASTM E 283 at pressure differential of 6.24 psf. Door shall not exceed 0.90 cfm per linear foot of perimeter crack.

C. Water Resistance: For a single door 3'-0" x 7'-0", test specimen shall be tested in accordance with ASTM E 331 at pressure differential of 7.50 psf. Door shall not have water leakage.

D. Indoor air quality testing per ASTM D 6670-01: GREENGUARD Environmental Institute Certified including GREENGUARD for Children and Schools Certification.

E. Hurricane Test Standards, Single Door with Single-Point Latching:
   1. Uniform Static Load, ASTM E 330: Plus or minus 75 pounds per square foot.
   2. Forced Entry Test, 300 Pound Load Applied, SFBC 3603.2 (b)(5): Passed.
   3. Cyclic Load Test, SFBC PA 203: Plus or minus 50 pounds per square foot.
   4. Large Missile Impact Test, SFBC PA 201: Passed.

F. Swinging Door Cycle Test, Doors and Frames, ANSI A250.4: Minimum of 25,000,000 cycles.

G. Cycle Slam Test Method, NWWDA T.M. 7.09: Minimum 5,000,000 Cycles.

H. Swinging Security Door Assembly, Doors and Frames, ASTM F 476: Grade 40.

I. Salt Spray, Exterior Doors and Frames, ASTM B 117: Minimum of 500 hours.

J. Sound Transmission, Exterior Doors, STC, ASTM E 90: Minimum of 25.

K. Thermal Transmission, Exterior Doors, U-Value, AAMA 1503-98: Maximum of 0.29 BTU/hr x sf x degrees F. Minimum of 55 CRF value.

L. Surface Burning Characteristics, Class A Option On Interior Faces of FRP Exterior Panels and Both Faces of FRP Interior Panels, ASTM E 84:
   1. Flame Spread: Maximum of 25.
   2. Smoke Developed: Maximum of 450.

M. Impact Strength, FRP Doors and Panels, Nominal Value, ASTM D 256: 15.0 foot-pounds per inch of notch.

N. Tensile Strength, FRP Doors and Panels, Nominal Value, ASTM D 638: 14,000 psi.

O. Flexural Strength, FRP Doors and Panels, Nominal Value, ASTM D 790: 21,000 psi.

P. Water Absorption, FRP Doors and Panels, Nominal Value, ASTM D 570: 0.20 percent after 24 hours.

Q. Indentation Hardness, FRP Doors and Panels, Nominal Value, ASTM D 2583: 55.

R. Gardner Impact Strength, FRP Doors and Panels, Nominal Value, ASTM D 5420: 120 in-lb.

S. Abrasion Resistance, Face Sheet, Taber Abrasion Test, 25 Cycles at 1,000 Gram Weight with CS-17 Wheel: Maximum of 0.029 average weight loss percentage.

NOT FOR BIDDING

T. Stain Resistance, ASTM D 1308: Face sheet unaffected after exposure to red cabbage, tea, and tomato acid. Stain removed easily with mild abrasive or FRP cleaner when exposed to crayon and crankcase oil.

U. Chemical Resistance, ASTM D 543. Excellent rating.
   1. Acetic acid, Concentrated.
   2. Ammonium Hydroxide, Concentrated.
   3. Citric Acid, 10%.
   4. Formaldehyde.
   5. Hydrochloric Acid, 10%
   6. Sodium hypochlorite, 4 to 6 percent solution.

V. Compressive Strength, Foam Core, Nominal Value, ASTM D 1621: 79[illegible] psi.

W. Compressive Modulus, Foam Core, Nominal Value, ASTM D 1621: 370 psi.

X. Tensile Adhesion, Foam Core, Nominal Value, ASTM D 1623: 45.3 psi.

Y. Thermal and Humid Aging, Foam Core, Nominal Value, 158 Degrees F and 100 Percent Humidity for 14 Days, ASTM D 2126: Minus 5.14 percent volume change.

1.05 SUBMITTALS

A. Product Data: Submit manufacturer's product data, including description of materials, components, fabrication, finishes, and installation.

B. Shop Drawings: Submit manufacturer's shop drawings including elevations, sections, and details, indicating dimensions, tolerances, materials, fabrication, doors, panels, framing, hardware schedule, and finish.

C. Samples:
   1. Door: Submit manufacturer's sample of door showing face sheets, core, framing, and finish.
   2. Color: Submit manufacturer's samples of standard colors of doors and frames.

D. Test Reports: Submit certified test reports from qualified independent testing agency indicating doors comply with specified performance requirements.

E. Manufacturer's Project References: Submit list of successfully completed projects including project name and location, name of architect, and type and quantity of doors manufactured.

F. Maintenance Manual: Submit manufacturer's maintenance and cleaning instructions for doors, including maintenance and operating instructions for hardware.

G. Warranty: Submit manufacturer's warranty.

1.06 QUALITY ASSURANCE

A. Manufacturer's Qualifications:
   Continuously engaged in manufacturing of doors of similar type to that specified, with a minimum of 5 years successful experience.

1.07 DELIVERY, STORAGE, AND HANDLING

A. Delivery: Deliver materials to site in manufacturer's original, unopened containers and packaging, with labels clearly identifying opening door mark and manufacturer.

B. Storage: Store materials in clean, dry area indoors in accordance with manufacturer's instructions.

C. Handling: Protect materials and finish from damage during handling and installation.

NOT FOR BIDDING

1.08 WARRANTY

A. Warrant doors, frames, and factory hardware against failure in materials and workmanship, including excessive deflection, faulty operation, defects in hardware installation, and deterioration of finish or construction in excess of normal weathering.

B. Warranty Period: Ten years starting on date of shipment. In addition, a limited lifetime (while the door is in its specified application in its original installation) warranty covering: failure of corner joinery, core deterioration, delamination or bubbling of door skin.

**PART 2- PRODUCTS**

2.01 MANUFACTURER

A. Basis of specification: Model SL-17 Flush FRP Doors by Special-Lite, Inc., PO Box 6, Decatur, Michigan 49045. Toll Free (800) 821-6531. Phone (269) 423-7668. Fax (800) 423-7610. Web Site www.special-lite.com. E-Mail info@special-lite.com.

B. Substitutions: See Section 01600 - Product Requirements

C. Subject to compliance with requirements, the following manufacturers/products are also approved:
   1. Vale Doors Model V-250
   2. FRP Architectural Doors, Inc.

2.02 FRP FLUSH DOORS

A. Model: Flush Doors with fiberglass reinforced polyester (FRP) face sheets.

B. Door Opening Size: As indicated on the Drawings.

C. Construction:
   1. Door Thickness: 1-3/4 inches.
   2. Stiles and Rails: Aluminum Alloy 6063-T5, minimum of 2-5/16-inch depth.
   3. Corners: Mitered.
   4. Provide joinery of 3/8-inch diameter full-width tie rods through extruded splines top and bottom integral to standard tubular shaped stiles and rails reinforced to accept hardware as specified.
   5. Securing Internal Door Extrusions: 3/16-inch angle blocks and locking hex nuts for joinery.
   6. Finish extruded stiles and rails with integral reglets to accept face sheets. Lock face sheets into place to permit flush appearance.
   7. Extrude top and bottom rail legs for interlocking continuous weather bar.
   8. Meeting Stiles: Pile brush weatherseals. Extrude meeting stile to include integral pocket to accept pile brush weatherseals.
   9. Bottom of Door: Install bottom weather bar with nylon brush weatherstripping into extruded interlocking edge of bottom rail.

D. Face Sheet:
   1. Material: FRP, 0.120-inch thickness, finish color throughout.
   2. Protective coating: Abuse-resistant engineered surface. Provide FRP with protective coating, or equal.
   3. Texture: Pebble.

E. Color: To be selected from manufacturer's standard range.

F. Core:
   1. Material: Poured-in-place polyurethane foam.

NOT FOR BIDDING

2. Density: Minimum of 5 pounds per cubic foot.
3. R-Value: Minimum of 9.

G. Cutouts:
1. Manufacture doors with cutouts for required vision lites, louvers, and panels.
2. Factory install vision lites, louvers, and panels.

H. Hardware:
1. Premachine doors in accordance with templates from specified hardware manufacturer and hardware schedule.

2.03 MATERIALS

A. Aluminum Members:
1. Extrusions: ASTM B 221.
2. Sheet and Plate: ASTM B 209.
3. Alloy and Temper: As required by manufacturer for strength, corrosion resistance, application of required finish, and control of color.

B. Fasteners:
1. Material: Aluminum, 18-8 stainless steel, or other noncorrosive metal.
2. Compatibility: Compatible with items to be fastened.
3. Exposed Fasteners: Screws with finish matching items to be fastened.

2.04 FABRICATION

A. Sizes and Profiles: Required sizes for door and frame units, and profile requirements shall be as indicated on the Drawings.

B. Coordination of Fabrication: Field measure before fabrication and show recorded measurements on shop drawings.

C. Assembly:
1. Complete cutting, fitting, forming, drilling, and grinding of metal before assembly.
2. Remove burrs from cut edges.

D. Fit:
1. Maintain continuity of line and accurate relation of planes and angles.
2. Secure attachments and support at mechanical joints with hairline fit at contacting members.

2.05 ALUMINUM DOOR FRAMING SYSTEMS

A. Storefront Framing: See Section 084313: Aluminum-Framed Entrances and Storefronts.

2.06 HARDWARE

A. Premachine doors in accordance with templates from specified hardware manufacturers and hardware schedule.

2.07 VISION LITES

A. Factory Glazing: 1-inch glass tempered insulating units. See Section 088000.

B. Lites in Exterior Doors: Allow for thermal expansion.

C. Rectangular Lites:
1. Size: As indicated on the Drawings.
2. Factory glazed with screw-applied aluminum stops with paint finish to match perimeter door rails.

NOT FOR BIDDING

2.08 ALUMINUM FINISHES

A. Painted Finishes: Kynar 500 or Hylar 5000; 2-coat system; color: as selected feom manufacturers full range of (12) colors minimum..

**PART 3 - EXECUTION**

3.01 EXAMINATION

A. Examine areas to receive doors. Notify Architect of conditions that would adversely affect installation or subsequent use. Do not proceed with installation until unsatisfactory conditions are corrected.

3.02 PREPARATION

A. Ensure openings to receive frames are plumb, level, square, and in tolerance.

3.03 INSTALLATION

A. Install doors in accordance with manufacturer's instructions.

B. Install doors plumb, level, square, true to line, and without warp or rack.

C. Anchor frames securely in place.

D. Separate aluminum from other metal surfaces with bituminous coatings or other means approved by Architect.

E. Set thresholds in bed of mastic and backseal.

F. Install exterior doors to be weathertight in closed position.

G. Repair minor damages to finish in accordance with manufacturer's instructions and as approved by Architect.

H. Remove and replace damaged components that cannot be successfully repaired as determined by Architect.

3.04 FIELD QUALITY CONTROL

A. Manufacturer's Field Services: Manufacturer's representative shall provide technical assistance and guidance for installation of doors.

3.05 ADJUSTING

A. Adjust doors, hinges, and locksets for smooth operation without binding.

3.06 CLEANING

A. Clean doors promptly after installation in accordance with manufacturer's instructions.

B. Do not use harsh cleaning materials or methods that would damage finish.

3.07 PROTECTION

A. Protect installed doors to ensure that, except for normal weathering, doors will be without damage or deterioration at time of substantial completion.

**END OF SECTION**

NOT FOR BIDDING

# SECTION 081700
# INTEGRATED DOOR OPENING ASSEMBLIES

## PART 1 GENERAL

1.01 SECTION INCLUDES

A. Factory-assembled and factory-finished hollow metal doors and frames, including hardware for door opening assemblies.

1.02 RELATED REQUIREMENTS

A. Section 087100 - Door Hardware: Door hardware submittal requirements.

1.03 REFERENCE STANDARDS

A. ADA Standards - Americans with Disabilities Act (ADA) Standards for Accessible Design; 2010.

B. ANSI/SDI A250.8 - Specifications for Standard Steel Doors and Frames (SDI-100); 2014.

C. ANSI/SDI A250.10 - Test Procedure and Acceptance Criteria for Prime Painted Steel Surfaces for Steel Doors and Frames; 2011.

D. BHMA A156.3 - American National Standard for Exit Devices; 2014.

E. BHMA A156.32 - Integrated Door Opening Assemblies; 2014.

F. ICC A117.1 - Accessible and Usable Buildings and Facilities; 2009.

G. NFPA 80 - Standard for Fire Doors and Other Opening Protectives; 2016.

H. NFPA 252 - Standard Methods of Fire Tests of Door Assemblies; 2012.

1.04 SUBMITTALS

A. Product Data: Materials and details of design and construction, hardware locations, reinforcement type and locations, anchorage and fastening methods, and finishes.

B. Shop Drawings: Indicate details of each opening showing elevations, glazing, frame profiles, hardware, and different finish locations, if any.

C. Door Hardware Schedule: Provided at end of section and containing detailed list of each hardware item to be provided on each integrated door opening.

1. Refer to Section 087100 for additional submittal requirements.

D. Samples: Submit two samples of exposed door finish materials, in manufacturer's standard sizes, showing factory finishes and colors as selected.

E. Certificate: Certify that products of this section meet or exceed specified requirements.

F. Installation Instructions: Manufacturer's published instructions, including any special installation instructions relating to this project.

G. Manufacturer's Qualification Statement.

H. Installer's Qualification Statement.

I. Warranty Documentation: Submit manufacturer warranty and ensure that forms have been completed in Owner's name and registered with manufacturer.

1.05 QUALITY ASSURANCE

A. Manufacturer Qualifications: Company specializing in manufacturing the products specified in this section with minimum three years documented experience.

B. Installer Qualifications: Company specializing in performing work of the type specified and with minimum three years of documented experience.

NOT FOR BIDDING

1.06 DELIVERY, STORAGE, AND HANDLING

A. Deliver units preassembled and prefinished, with door hardware mounted and functioning, and packaged to protect contents from damage.

B. Store in a clean, dry, and ventilated space having controlled temperature and relative humidity between 30 and 60 percent and in accordance with manufacturer's written instructions.

C. Stack doors flat and off the floor to prevent warping.

1.07 WARRANTY

A. Provide manufacturer's standard warranty against defects in material and workmanship.
   1. For entire door opening assembly, provide five year warranty period after Date of Substantial Completion.
   2. Warranty shall be void unless units are stored in accordance with manufacturer's instructions prior to installation.

**PART 2 PRODUCTS**

2.01 MANUFACTURERS

A. Integrated Door Opening Assemblies Manufacturers:
   1. Adams Rite - The Rite Door, an Assa Abloy Group company: www.ritedoor.com.
   2. Syntegra Door Systems by Door Systems, Inc: www.doorsysinc.com/sle.
   3. Total Door Systems: www.totaldoor.com.
   4. Substitutions: See Section 016000 - Product Requirements.

2.02 ASSEMBLIES

A. Door, Frame, and Hardware Assemblies: Provide fully functional, factory-assembled and factory-finished door opening units, complete with door, frame, and hardware; complying with BHMA A156.32 and specified requirements.
   1. Accessibility: Comply with ICC A117.1 and ADA Standards.

B. Applications:
   1. Door opening assemblies include cross corridor and stairwell as indicated on drawings.
      a. Provide double door openings as indicated on drawings.
      b. Provide independent latching pairs.

2.03 PERFORMANCE REQUIREMENTS

A. Comply with requirements of local building code and authorities having jurisdiction, and the following:
   1. Force to Open Interior Swinging Egress Doors, Non-Fire Doors: Not more than 5 pounds.
   2. Force to Release Latch for Other Swinging Doors: Not more than 15 pounds to release latch, not more than 30 pounds to set door in motion, and not more than 15 pounds to swing door to full open position.
   3. Fire-Rated Doors: Comply with NFPA 80 and NFPA 252.
      a. Hourly Fire-Rating: As indicated on drawings.

2.04 COMPONENTS

A. Hollow Metal Doors: Doors complying with ANSI/SDI A250.8 construction requirements exceeding Level 3 and Physical Performance Level A, Model 1 - Full Flush; electrogalvanized prior to finishing; manufacturer's standard core and reinforcements.
   1. Door Thickness: 1-3/4 inches.
   2. Fire-Rated Doors: 16 gage, 0.053 inch thick faces and edges.

NOT FOR BIDDING

B. Hollow Metal Door Frames: Formed steel cased opening complying with ANSI/SDI A250.8 construction requirements exceeding Level 3 and Physical Performance Level A; electrogalvanized prior to finishing.

2.05 DOOR HARDWARE

A. Manufacturers: Door hardware manufacturers are as determined by manufacturer of Integrated Door Opening Assemblies in compliance with BHMA A156.32 requirements for applications indicated.

B. Flush Panel Exit Devices: Provide flush panel exit device, recessed into door; extruded aluminum, selected anodized finish; complying with BHMA A156.3, Grade 1.
   1. Projection From Face of Door: Maximum of 3/16 inch when door is open; minimum of 1-1/8 inch when closed.
   2. Face Insert: To match door finish.

2.06 FINISHES

A. Doors and Frames:
   1. Primed Frames: Rust-inhibiting, complying with ANSI/SDI A250.10, door manufacturer's standard.

**PART 3 EXECUTION**

3.01 EXAMINATION

A. Verify existing conditions before starting this Work.

B. Verify that opening sizes and tolerances are acceptable.

3.02 INSTALLATION

A. Install doors in accordance with manufacturer's requirements and the specified performance requirements.

B. Install fire rated units in accordance with NFPA 80.

C. Coordinate frame anchor placement with wall construction.

D. Touch up damaged factory finishes.

3.03 TOLERANCES

A. Clearances Between Door and Frame: As specified in ANSI/SDI A250.8.

B. Maximum Diagonal Distortion: 1/16 in measured with straight edge, corner to corner.

3.04 ADJUSTING

A. Adjust for smooth and balanced door movement.

**END OF SECTION**

NOT FOR BIDDING

# SECTION 083100
# ACCESS DOORS AND PANELS

## PART 1 GENERAL

1.01 SECTION INCLUDES

A. Wall and ceiling access door and frame units.

1.02 RELATED REQUIREMENTS

A. Section 099123 - Interior Painting: Field paint finish.

1.03 REFERENCE STANDARDS

A. UL (FRD) - Fire Resistance Directory; current edition.

1.04 SUBMITTALS

A. See Section 013000 - Administrative Requirements, for submittal procedures.

B. Product Data: Provide sizes, types, finishes, hardware, scheduled locations, and details of adjoining work.

C. Manufacturer's Installation Instructions: Indicate installation requirements.

D. Project Record Documents: Record actual locations of each access unit.

1.05 QUALITY ASSURANCE

A. Manufacturer Qualifications: Company specializing in manufacturing the products specified in this section with minimum three years documented experience.

## PART 2 PRODUCTS

2.01 ACCESS DOORS AND PANELS ASSEMBLIES

A. Wall-Mounted Units:
1. Location: As indicated on drawings.
2. Material: Steel.
3. Size: 24 inch by 24 inch.
4. Door/Panel: Hinged, standard duty, with tool-operated spring or cam lock and no handle.
5. Gypsum Board Mounting Criteria: Provide drywall bead frame with door surface flush with wall surface.
6. Masonry Mounting Criteria: Provide surface-mounted frame with door surface flush with frame surface.

B. Wall-Mounted Units in Wet Areas:
1. Location: As indicated on drawings.
2. Material: Steel, hot-dipped zinc, or zinc-aluminum-alloy coated.
3. Size: 24 inch by 24 inch.
4. Door/Panel: Hinged, standard duty, with tool-operated spring or cam lock and no handle.
5. Gypsum Board Mounting Criteria: Provide drywall bead frame with door surface flush with wall surface.
6. Masonry Mounting Criteria: Provide surface-mounted frame with door surface flush with frame surface.

2.02 WALL AND CEILING MOUNTED UNITS

A. Manufacturers:
1. ACUDOR Products Inc: www.acudor.com/#sle.
2. Babcock-Davis: www.babcockdavis.com/#sle.

NOT FOR BIDDING

3. Milcor, Inc: www.milcorinc.com.
4. Substitutions: See Section 016000 - Product Requirements.

B. Wall and Ceiling Mounted Units: Factory fabricated door and frame, fully assembled units with corner joints welded, filled and ground flush; square and without rack or warp; coordinate requirements with type of installation assembly being used for each unit.
1. Style: Exposed frame with door surface flush with frame surface.
a. Gypsum Board Mounting Criteria: Use drywall bead type frame.
2. Door Style: Single thickness with rolled or turned in edges.
3. Frames: 16 gage, 0.0598 inch, minimum thickness.
4. Single Steel Sheet Door Panels: 1/16 inch, minimum thickness.
5. Units in Fire-Rated Assemblies: Fire rating as required by applicable code for fire-rated assembly that access doors are being installed.
a. Provide products listed by UL (FRD) as suitable for purpose indicated.
b. Provide certificate of compliance from authorities having jurisdiction indicating approval of fire rated doors.
6. Steel Finish: Primed.
7. Primed and Factory Finish: Polyester powder coat color as selected by Architect from manufacturer's standard colors.
8. Hardware:
a. Hardware for Fire-Rated Units: As required for listing.
b. Hinges for Non-Fire-Rated Units: Concealed constant force closure spring type.

**PART 3 EXECUTION**

3.01 EXAMINATION

A. Verify that rough openings are correctly sized and located.

B. Begin installation only after substrates have been properly prepared, and if the responsibility of another installer, notify Architect of unsatisfactory preparation before proceeding.

3.02 PREPARATION

A. Clean surfaces thoroughly prior to proceeding with this work.

B. Prepare surfaces using methods recommended by manufacturer for applicable substrates in accordance with project conditions.

3.03 INSTALLATION

A. Install units in accordance with manufacturer's instructions.

B. Install frames plumb and level in openings, and secure units rigidly in place.

C. Position units to provide convenient access to concealed equipment when necessary.

**END OF SECTION**

NOT FOR BIDDING

# SECTION 083323
# OVERHEAD COILING DOORS

## PART 1 GENERAL

1.01 SECTION INCLUDES

A. Overhead coiling doors , operating hardware, fire-rated and exterior, electric operation.

B. Wiring from electric circuit disconnect to operator to control station.

1.02 RELATED REQUIREMENTS

A. Section 083326 - Overhead Coiling Grilles.

B. Section 087100 - Door Hardware: Cylinder cores and keys.

C. Section 260583 - Wiring Connections: Power to disconnect.

1.03 REFERENCE STANDARDS

A. ASTM A36/A36M - Standard Specification for Carbon Structural Steel; 2014.

B. ASTM A123/A123M - Standard Specification for Zinc (Hot-Dip Galvanized) Coatings on Iron and Steel Products; 2015.

C. ASTM A653/A653M - Standard Specification for Steel Sheet, Zinc-Coated (Galvanized) or Zinc-Iron Alloy-Coated (Galvannealed) by the Hot-Dip Process; 2015.

D. ITS (DIR) - Directory of Listed Products; current edition.

E. NEMA 250 - Enclosures for Electrical Equipment (1000 Volts Maximum); 2014.

F. NEMA ICS 2 - Industrial Control and Systems Controllers, Contactors and Overload Relays Rated 600 Volts; 2000 (R2005), with errata, 2008.

G. NEMA MG 1 - Motors and Generators; 2014.

H. NFPA 80 - Standard for Fire Doors and Other Opening Protectives; 2016.

I. NFPA 105 - Standard for Smoke Door Assemblies and Other Opening Protectives; 2016.

J. UL (DIR) - Online Certifications Directory; current listings at database.ul.com.

K. UL 325 - Standard for Door, Drapery, Gate, Louver, and Window Operators and Systems; Current Edition, Including All Revisions.

L. UL 1784 - Standard for Air Leakage Tests of Door Assemblies; Current Edition, Including All Revisions.

1.04 SUBMITTALS

A. Product Data: Provide, , electrical equipment, and component connections and details.

B. Shop Drawings: Indicate pertinent dimensioning, anchorage methods, hardware locations, and installation details.

C. Manufacturer's Installation Instructions: Indicate installation sequence and procedures, adjustment and alignment procedures.

D. Maintenance Data: Indicate lubrication requirements and frequency and periodic adjustments required.

E. Test reports specified below.

1.05 QUALITY ASSURANCE

A. Products Requiring Electrical Connection: Listed and classified by ITS (DIR), UL (DIR), or testing firm acceptable to authorities having jurisdiction as suitable for purpose specified.

NOT FOR BIDDING

B. Cycle Life: Standard construction for normal use of up to 20 cycles per day

**PART 2 PRODUCTS**

2.01 MANUFACTURERS

A. Overhead Exterior Coiling Doors:
   1. Cornell Iron Works, Inc; Product ESD30 Thermiser Max: www.cornelliron.com. is the Basis of Design.
   2. Other Approved manufacturers:
      a. The Cookson Company: www.cooksondoor.com.
      b. Wayne-Dalton, a Division of Overhead Door Corporation: www.wayne-dalton.com.
   3. Substitutions: See Section 016000 - Product Requirements.

B. Overhead Interior Coiling Fire Doors:
   1. Cornell Iron Works, Inc; Product ERD11 with SmokeShield: www.cornelliron.com is the Basis of Design.
   2. Other Approved manufacturers:
      a. The Cookson Company: www.cooksondoor.com/#sie
   3. Substitutions: See Section 016000 - Product Requirements.

2.02 COILING DOORS

A. Exterior Coiling Doors: Steel slat curtain, insulated.
   1. Capable of withstanding positive and negative wind loads of 20 psf, without undue deflection or damage to components.
   2. Air infiltration rate of less than 0.3 CFM/FT2 as tested per ASTM E283 and validated by an independent testing agency.
   3. Insulated Door Slat Material Requirements:
      a. Flame Spread Index of 0 and a Smoke Developed Index of 10 as tested per ASTM E84.
      b. Minimum Sound Transmission Class (STC) rating of 26 as tested per ASTM E90.
      c. Minimum R-value of 8.0 (U-factor of 0.125) as calculated using the ASHRAE Handbook of Fundamentals.
      d. Insulation to be CFC Free with an Ozone Depletion Potential (ODP) rating of zero.
   4. Slat Material: Galvanized Steel/Galvanized Steel: , Grade 40, ASTM A 653 galvanized steel, zinc coating.
   5. Nominal Slat Size: 2 inches wide x required length.
   6. Exterior Slat Finish: ASTM A 653 galvanized base coating treated with dual process rinsing agents in preparation of a chemical bonding, baked-on polyester base coat and a baked-on polyester finish coat.
   7. Interior slat finish: Coating System and phosphate treatment followed by baked-on polyester powder coat, color as selected by Architect from manufacturer's standard color range, minimum 2.5 mils (0.065 mm) cured film thickness; ASTM D-3363 pencil hardness: H or better.
   8. Endlocks: Fabricate interlocking sections with high strength nylon endlocks on alternate slats. Provide windlocks to meet specified wind load.
   9. Bottom Bar: Provide reinforced extruded aluminum interior face with full depth insulation and exterior skin slat to match curtain material and gauge. Minimum 4" tall.
   10. Air Infiltration Certification Label: affix to bottom bar.
   11. Guide, Angles: Primed steel.
      a. Provide thermal break.

NOT FOR BIDDING

b. Finish: powder coat, color as selected from manufacturer's standard range.

12. Counterbalance shaft assembly:
    a. Barrel: Steel pipe capable of supporting curtain load with maximum deflection of 0.03 inches per foot of width.
    b. Spring Balance: Oil-tempered, heat-treated steel helical torsion spring assembly designed for proper balance of door to ensure that maximum effort to operate will not exceed 25 lbs. Provide wheel for applying and adjusting spring torque.
13. Brackets:
    a. Fabricate from minimum 3/16 inch (5 mm) steel plate with permanently lubricated ball or roller bearings at rotating support points to support counterbalance shaft assembly and form end closures.
    b. Finish: powder coat, color as selected from manufacturer's standard range.
14. Hood Enclosure: Manufacturer's standard; galvanized steel.
    a. Finish: ASTM A 653 galvanized base coating treated with dual process rinsing agents in preparation of a chemical bonding, baked-on polyester base coat and a baked-on polyester finish coat.
15. Weatherstripping:
    a. Bottom bar: Replaceable, bulb-style, compressible EDPM gasket extending into guides.
    b. Guides: Replaceable vinyl strip on guides sealing against fascia side of curtain.
    c. Lintel seal: Double brush seal with EPDM sandwiched between the two brush seals at door header to impede air flow.
16. Electric operation.
17. Mounting: As indicated on drawings.
18. Locking:
    a. Master-keyable cylinder operable from coil side of bottom bar.
    b. Coordinate with owner's standard cylinder type.

B. Interior Fire-Rated Coiling Doors: Steel slat curtain; conform to NFPA 80.
1. 1-1/2 hour fire rating.
    a. Provide smoke and draft control door assemblies tested in accordance with UL 1784.
2. Provide product listed and labeled by ITS (DIR) or UL (DIR) as suitable for the purpose specified and indicated.
3. Oversized Openings: Provide certificate of compliance from authorities having jurisdiction indicating approval of fire rated units and operating hardware assembly.
4. Nominal Slat Size: 2 inches wide by required length.
5. Finish: Factory painted, color as selected from manufacturer's standard range.
6. Bottom Bar:
    a. 2 structural steel angles minimum 2”x2”x1/8”.
    b. Finish: Powder coat, color as selected from manufacturer's standard range.
7. Guides, Angles: Galvanized steel.
    a. Finish: Powder coat, color as selected from manufacturer's standard range.
8. Counterbalance Shaft Assembly
    a. Barrel: Steel pipe capable of supporting curtain load with maximum deflection of 0.03 inches per foot of width.
    b. Spring Balance: Oil-tempered, heat-treated steel helical torsion spring assembly designed for proper balance of door to ensure that maximum effort to operate will not exceed 25 lbs. Provide wheel for applying and adjusting spring torque.
9. Brackets:

NOT FOR BIDDING

a. Fabricate from minimum 1/4 inch steel plate with permanently lubricated ball or roller bearings at rotating support points to support counterbalance shaft assembly and form end closures.
b. Finish: Powder coat, color as selected from manufacturer's standard range.

10. Hood Enclosure: Manufacturer's standard; galvanized steel.
11. Combination Weather/Smoke Seals:
    a. Bottom Bar: Combination smoke seal/sensing edge.
    b. Guides and Head: Replaceable, UL-listed, brush smoke seals sealing against fascia side of curtain.
12. Fire Alarm Release Mechanism: Electric-motor operated from fire alarm system.
13. Motor Operation:
    a. AlarmGard Plus Advanced Fire Door Motor Operation with Chain Hoist and Battery Backup: UL, cUL listed NEMA 1 enclosure, horsepower as recommended by manufacturer, 115v single phase service. Provide a totally enclosed non ventilated motor, removable without affecting the setting of limit switches; thermal overload protection, planetary gear reduction, adjustable rotary limit switch mechanism and a transformer with 24v secondary output. All internal electrical components are to be prewired to terminal blocks.
        1) Provide a failsafe motor operated door assembly requiring no ancillary or externally mounted release devices, cables, chains, pulleys, reset handles or mechanisms.
        2) Equip operator with an emergency manual chain hoist assembly that provides emergency operation during non-alarm power failure.
        3) Provide an internal electrical failsafe release device that requires no additional wiring, external cables or mounting locations.
        4) Provide an internal solenoid brake mechanism to hold the door at any position during normal door operation.
        5) Provide logic for 1 fully monitored safety reversing devices such that the failure of any single monitored device will cause the motor operator to automatically revert to constant pressure to close.
        6) Electrically activate door system automatic closure by notification from central alarm system or extended power failure.
        7) Provide an automatic alarm closure selectable time delay of zero or ten seconds.
        8) Control automatic closure speed with an internal, totally enclosed, variable rate centrifugal governor without the use of electrical pulsation, constant rate viscosity, oscillation type or other exposed governing devices.
        9) Maintain automatic closure speed at not more than 9 inches per second.
        10) Enable safety edge function during alarm closing while power is present for 3 cycles. Enable door to rest upon obstruction following this sequence.
        11) Electrically reset internal failsafe release device and door operating system upon restoration of electrical power and upon clearing of the alarm signal without requiring human interaction.
        12) Provide selectable ability for the door system to automatically self-cycle to the fully open position following automatic reset without requiring human interaction
        13) Provide an integral, non-resettable cycle counter.
        14) Ensure that manual resetting of spring tension, release devices, linkages or mechanical dropouts will not be required.

NOT FOR BIDDING

15) Provide minimum #50 roller chain for drive connection from motor drive assembly to the door drive shaft.
16) Install system only with manufacturer supplied or specified fasteners.
17) Notify electrical contractor to mount control station(s) and supply the appropriate disconnect switch, all conduit and wiring per the door system wiring instructions.
18) Drop test and reset door system twice by all means of activation and comply fully with NFPA 80 Section 5.

14. Control Station
    a. Flush mounted, "Open/Close" key switch with cylinder (coordinate core with Owner standard), NEMA 1B.
15. Control Operation
    a. Momentary contact to close:
        1) Fail- safe, UL325-2010 Compliant Entrapment Protection for Motor Operation.
        2) Continuously monitored, wireless sensing/weather edge seal extending full width of door bottom bar.
16. Mounting: As indicated on drawings.

2.03 MATERIALS AND COMPONENTS

A. Curtain Construction: Interlocking slats.
    1. Slat Ends: Alternate slats fitted with end locks to act as wearing surface in guides and to prevent lateral movement.
    2. Curtain Bottom: Fitted with angles to provide reinforcement and positive contact in closed position.
    3. Smoke Seals: Provide brush or gasket type weatherstripping seals to prevent passage of smoke and hot gases in compliance with UL 1784 testing requirements.
    4. Weatherstripping (exterior doors): Moisture and rot proof, resilient type.
        a. Bottom Bar, Motor Operated Doors: Sensing/weather edge with neoprene astragal extending full width of door bottom bar.
        b. Guides: Replaceable vinyl strip on guides sealing against fascia side of curtain.
        c. Lintel Seal: Nylon brush seal fitted at door header to impede air flow.
        d. Hood: Neoprene/rayon baffle to impede air flow above coil.

B. Steel Slats: Minimum 20 gage (0.8 mm thick)ASTM A 653/A 653M galvanized steel sheet.
    1. Galvanizing: Minimum G90 coating.

C. Guide Construction: Continuous, of profile to retain door in place with snap-on trim, mounting brackets of same metal.

D. Hood Enclosure and Trim: Internally reinforced to maintain rigidity and shape.
    1. Minimum thickness; 24 gage, 0.0239 inch.
    2. ASTM A 653 galvanized base coating treated with dual process rinsing agents in preparation for chemical bonding, baked-on base coat and baked-on polyester finish coat.

E. Lock Hardware:
    1. Cylindrical Locking Mechanism: Latchset lock cylinder, specified in Section 087100.
    2. For motor operated units, additional lock or latching mechanisms are not required.

F. Roller Shaft Counterbalance: Steel pipe and helical steel spring system, capable of producing torque sufficient to ensure smooth operation of curtain from any position and capable of holding position at mid-travel; with adjustable spring tension; requiring 25 lb nominal force to operate.

NOT FOR BIDDING

2.04 ELECTRIC OPERATION

A. Electric Operators:
   1. Mounting: Side mounted.
   2. Motor Enclosure:
   3. Motor Rating: 1/2 hp; continuous duty.
   4. Motor Voltage: 120 volts, single phase, 60 Hz.
   5. Motor Controller: NEMA ICS 2, full voltage, reversing magnetic motor starter.
   6. Controller Enclosure: NEMA 250, Type 1.
   7. Opening Speed: 12 inches per second.
   8. Brake: Adjustable friction clutch type, activated by motor controller.
   9. Manual override in case of power failure.
   10. Refer to Section 260583 for electrical connections.

B. Control Station: Provide standard three button (Open-Close-Stop) momentary contact control device for each operator conforming to UL 325.
   1. 24 volt circuit.
   2. Surface mounted, at interior door jamb.
   3. Entrapment Protection Devices: Provide sensing devices and safety mechanisms conforming to UL 325.
      a. Primary Device: Provide electric sensing edge, wireless sensing, NEMA 1 photo eye sensors, or NEMA 4X photo eye sensors as required with momentary-contact control device.

C. Safety Edge: Located at bottom of coiling door, full width, electro-mechanical sensitized type, wired to stop and reverse door direction upon striking object, hollow neoprene covered.

**PART 3 EXECUTION**

3.01 EXAMINATION

A. Verify that opening sizes, tolerances and conditions are acceptable.

3.02 INSTALLATION

A. Install units in accordance with manufacturer's instructions.

B. Install fire-rated doors in accordance with NFPA 80.

C. Install smoke door assemblies in accordance with NFPA 105.

D. Use anchorage devices to securely fasten assembly to wall construction and building framing without distortion or stress.

E. Securely and rigidly brace components suspended from structure. Secure guides to structural members only.

F. Fit and align assembly including hardware; level and plumb, to provide smooth operation.

G. Coordinate installation of electrical service with Section 260583.

H. Complete wiring from disconnect to unit components.

I. Complete wiring from fire alarm system.

J. Install enclosure and perimeter trim.

3.03 TOLERANCES

A. Maintain dimensional tolerances and alignment with adjacent work.

B. Maximum Variation From Plumb: 1/16 inch.

NOT FOR BIDDING

C. Maximum Variation From Level: 1/16 inch.

D. Longitudinal or Diagonal Warp: Plus or minus 1/8 inch per 10 ft straight edge.

3.04 ADJUSTING

A. Adjust operating assemblies for smooth and noiseless operation.

3.05 CLEANING

A. Clean installed components.

B. Remove labels and visible markings.

**END OF SECTION**

NOT FOR BIDDING

# SECTION 083326
# OVERHEAD COILING GRILLES

## PART 1 GENERAL

1.01 SECTION INCLUDES

A. Overhead coiling metal grilles and operating hardware; electrically operated.

B. Wiring from electric circuit disconnect to operator and to control station.

C. Structural support tubes for overhead coiling grilles.

1.02 RELATED REQUIREMENTS

A. Section 083323 - Overhead Coiling Doors.

B. Section 087100 - Door Hardware: Cylinder cores and keys.

C. Section 092600 - Gypsum Board Assemblies.

D. Section 260583 - Wiring Connections: Power to disconnect.

1.03 REFERENCE STANDARDS

A. ASTM A123/A123M - Standard Specification for Zinc (Hot-Dip Galvanized) Coatings on Iron and Steel Products; 2015.

B. ASTM B221 - Standard Specification for Aluminum and Aluminum-Alloy Extruded Bars, Rods, Wire, Profiles, and Tubes; 2014.

C. ASTM B221M - Standard Specification for Aluminum and Aluminum-Alloy Extruded Bars, Rods, Wire, Profiles, and Tubes (Metric); 2013.

D. ITS (DIR) - Directory of Listed Products; current edition.

E. NEMA 250 - Enclosures for Electrical Equipment (1000 Volts Maximum); 2014.

F. NEMA ICS 2 - Industrial Control and Systems Controllers, Contactors and Overload Relays Rated 600 Volts; 2000 (R2005), with errata, 2008.

G. NEMA MG 1 - Motors and Generators; 2014.

H. UL (DIR) - Online Certifications Directory; current listings at database.ul.com.

I. UL 325 - Standard for Door, Drapery, Gate, Louver, and Window Operators and Systems; Current Edition, Including All Revisions.

1.04 SUBMITTALS

A. Product Data: Provide general construction component connections and details, and electrical equipment.

B. Shop Drawings: Indicate pertinent dimensioning, anchorage methods, hardware locations, and installation details.

C. Manufacturer's Installation Instructions: Indicate installation sequence and procedures, adjustment and alignment procedures.

D. Maintenance Data: Indicate lubrication requirements and frequency; periodic adjustments required; and other pertinent data.

1.05 QUALITY ASSURANCE

A. Provide certificate of compliance from authorities having jurisdiction indicating approval of grille and operating hardware assembly.

NOT FOR BIDDING

B. Products Requiring Electrical Connection: Listed and classified by Underwriters Laboratories Inc. or testing firm acceptable to the authority having jurisdiction, as suitable for the purpose specified and indicated.

**PART 2 PRODUCTS**

2.01 MANUFACTURERS

A. Overhead Coiling Grilles:
   1. Cornell Iron Works, Inc, (www.cornelliron.com) Visionaire ESG10 is the Basis of Design.
   2. Other Approved Manufacturers:
      a. The Cookson Company: www.cooksondoor.com.
      b. Wayne-Dalton, a Division of Overhead Door Corporation: www.waynedalton.com.
   3. Substitutions: See Section 016000 - Product Requirements.

2.02 GRILLES AND COMPONENTS

A. Grille: Aluminum; horizontal bar curtain, coiling on overhead counterbalanced shaft.
   1. Finish: Anodized, color as selected by Architect.
   2. Lock Devices: Lock and latch handle on outside.
   3. Electric operation.
   4. Mounting: Within framed opening and as indicated.

B. Curtain: Round horizontal bars connected with vertical links.
   1. Horizontal bars: 5/16 inch diameter.
   2. Bar spacing: 1 1/2 inch on center.
   3. Tube spacers: 1/2 inch diameter.
   4. Spacer spacing: 3 1/4 inch on center.
   5. Vertical links: 5/16 inch diameter.
   6. Link spacing: 9 inch on center.
   7. Bar Ends: Provide with nylon or wood pile runners for quiet operation.
   8. Bottom Bar: Back-to-back angles with tubular resilient cushion.

C. Guides: Extruded aluminum angles, tube mounted, of profile to retain grille in place with snap-on trim, mounting brackets of same metal.

D. Lock Hardware:
   1. Cylindrical Locking Mechanism: Latchset lock cylinder, specified in Section 087100.
   2. Latching Mechanism: Keyed cylinder locking into both jambs operable from both sides of curtain with motor interlock cutout switches.

E. Roller Shaft Counterbalance: Steel pipe and helical steel spring system, capable of producing torque sufficient to ensure smooth operation of curtain from any position and capable of holding position at mid-travel; with adjustable spring tension; requiring 25 lb (10 kg) nominal force to operate.

F. Structural supports: Provide manufacturer-designed structural support tubes.

2.03 MATERIALS

A. Aluminum: ASTM B221 (ASTM B221M).

2.04 ELECTRIC OPERATION

A. Operator, Controls, Actuators, and Safeties: Comply with UL 325; provide products listed by ITS (DIR), UL (DIR), or testing agency acceptable to authorities having jurisdiction.
   1. Provide interlock switches on motor operated units.

NOT FOR BIDDING

B. Electric Operators:
   1. Mounting: Side mounted.
   2. Motor Rating: 1/2 hp; continuous duty.
   3. Motor Voltage: 120 volts, single phase, 60 Hz.
   4. Motor Controller: NEMA ICS 2, full voltage, reversing magnetic motor starter.
   5. Controller Enclosure: NEMA 250 Type 1.
   6. Opening Speed: 12 inches per second.
   7. Brake: Adjustable friction clutch type, activated by motor controller.
   8. Manual override in case of power failure.
   9. Refer to Section 260583 for electrical connections.

C. Control Station: Provide standard three button (Open-Close-Stop) momentary contact control device for each operator conforming to UL 325.
   1. 24 volt circuit.
   2. Surface mounted, at interior door jamb.
   3. Entrapment Protection Devices: Provide sensing devices and safety mechanisms conforming to UL 325.
      a. Primary Device: Provide electric sensing edge, wireless sensing, NEMA 1 photo eye sensors, or NEMA 4X photo eye sensors as required with momentary-contact control device.

D. Safety Edge: Located at bottom of curtain, full width, electro-mechanical or pneumatic sensitized type, wired to stop or reverse operation upon striking object, hollow neoprene or rubber covered.

**PART 3 EXECUTION**

3.01 EXAMINATION

A. Verify that opening sizes, tolerances and conditions are acceptable.

3.02 INSTALLATION

A. Install grille unit assembly in accordance with manufacturer's instructions.

B. Install manufacturer-designed structural support tubes.

C. Securely and rigidly brace components suspended from structure. Secure guides to structural members only.

D. Fit and align assembly including hardware; level and plumb, to provide smooth operation.

E. Coordinate installation of electrical service with Section 260583.

F. Complete wiring from disconnect to unit components.

G. Install perimeter trim, closures and other standard accessories.

3.03 TOLERANCES

A. Maintain dimensional tolerances and alignment with adjacent work.

B. Maximum Variation From Plumb: 1/16 inch.

C. Maximum Variation From Level: 1/16 inch.

D. Longitudinal or Diagonal Warp: Plus or minus 1/8 inch per 10 ft straight edge.

3.04 ADJUSTING

A. Adjust grille, hardware and operating assemblies for smooth and noiseless operation.

NOT FOR BIDDING

3.05 CLEANING

A. Clean grille and components.

B. Remove labels and visible markings.

**END OF SECTION**

NOT FOR BIDDING

# SECTION 084123
# FIRE RATED ALUMINUM-FRAMED STOREFRONTS

## GENERAL

1.01 SUMMARY

A. Section includes:
   1. Fire rated glazing and framing systems for installation as wall systems in interior stair tower enclosures.
   2. Fire rated glazing and framing systems for installation as window systems in other fire separation assemblies.

1.02 RELATED SECTIONS:

A. Section 042000 - Unit Masonry

B. Section 088000 - Fire-rated glass and glazing

C. Section 092116 - Gypsum Board Assemblies

1.03 REFERENCES

A. American Architectural Manufacturers Association (AAMA)
   1. AAMA 2603-2002 - Voluntary Specification, Performance Requirements and Test Procedures for Pigmented Organic Coatings on Aluminum Extrusions and Panels.

B. American Society for Testing and Materials (ASTM):
   1. Fire safety related:
      a. ASTM E119: Methods for Fire Tests of Building Construction and Materials.
      b. ASTM E2010-01: Standard Test Method for Positive Pressure Fire Tests of Window Assemblies.
   2. Material related
      a. ASTM A 1008/A 1008M - Standard Specification for Steel, Sheet, Cold-Rolled, Carbon, Structural, High-Strength, Low Alloy, and High-Strength Low-Alloy with Improved Formability, Solution Hardened, and Bake Hardenable; 2007.
      b. ASTM A 1011/A 1011M - Standard Specification for Steel, Sheet and Strip, Hot-Rolled, Carbon, Structural, High-Strength Low-Alloy and High-Strength Low-Alloy with Improved Formability, and Ultra-High Strength; 2006b.
   3. American Welding Society (AWS)
      a. AWS D1.3 - Structural Welding Code - Sheet Steel;; 2007
   4. National Fire Protection Association (NFPA):
      a. NFPA 80: Fire Doors and Windows.
      b. NFPA 251: Fire Tests of Building Construction & Materials
      c. NFPA 257: Fire Test of Window Assemblies
   5. Underwriters Laboratories, Inc. (UL):
      a. UL 9: Fire Tests of Door Assemblies
      b. UL 10 B: Fire Tests of Door Assemblies
      c. UL 10 C: Positive Pressure Fire Tests of Window & Door Assemblies
      d. UL 263: Fire tests of Building Construction and Materials
      e. UL-752 Ratings of Bullet-Resistant Materials
   6. American National Standards Institute (ANSI):
      a. ANSI Z97.1: Standard for Safety Glazing Materials Used in Buildings
   7. Consumer Product Safety Commission (CPSC):
      a. CPSC 16 CFR 120: Safety Standard for Architectural Glazing Materials

NOT FOR BIDDING

1.04 PERFORMANCE REQUIREMENTS

A. Fire Rating Requirements
   1. Duration – Windows Capable of providing a fire rating for 60 minutes.
   2. Duration – Walls: Capable of providing a fire rating for 60 minutes.

1.05 SUBMITTALS

A. Submit in accordance with Section 013000.

B. Product Data: include laboratory test data.

C. Shop Drawings:
   1. Include plans, elevations and details of product showing component dimensions, framed opening requirements, dimensions, tolerances, and attachment to structure.
   2. Provide templates for the location of embeds and anchor locations required by adjoining work
   3. Glazing Schedule: Use same designations indicated on Drawings for glazed openings in preparing a schedule listing glass types and thicknesses for each size opening and location.
   4. Technical Information: Submit latest edition of manufacturer's product data providing product descriptions, technical data and installation instructions. Including blank warranty form.
   5. Installer Qualification Data: For firms and persons specified in "Quality Assurance" Article to demonstrate their capabilities and experience. Include lists of completed projects with project names and addresses, names and addresses of architects and owners, and other information specified.
   6. Manufacturer's Certificate
   7. Maintenance Data
   8. Warranties: Submit manufacturer's warranty and ensure that forms have been completed in the Owner's name and registered with the manufacturer.

1.06 QUALITY ASSURANCE

A. Installer Qualifications: An experienced installer who has completed glazing similar in material, design, and extent to that indicated for Project and whose work has resulted in construction with a record of successful in-service performance.

B. Source Limitations for Glazing Accessories: Obtain glazing accessories from one source for each product and installation method indicated.

C. Fire-Rated Window Assemblies: Assemblies complying with NFPA 80 that are listed and labeled by UL, for fire ratings indicated, based on testing according to NFPA 257, ASTM E119.

D. Fire-Rated Wall Assemblies: Assemblies complying with ASTM E119 that are classified and labeled by UL, for fire ratings indicated, based on testing in accordance with UL 263, ASTM E119.

E. Certification: Signed by manufacturers of glass and glazing products certifying that products furnished comply with requirements.
   1. Window assemblies shall be tested to the acceptance criteria of ASTM E2010-01, NFPA 257, UL 10-B, UL 10-C Standard methods for Fire Tests of Window Assemblies.
   2. Wall assemblies shall be tested to the acceptance criteria of ASTM E119, NFPA 251, UL 263 Standard Test Methods for Fire Tests of Building Construction and Materials.

NOT FOR BIDDING

3. Listings and Labels - Fire Rated Assemblies: Under current follow-up service by an approved independent agency maintaining a current listing or certification. Label assemblies accordance with limits of manufacturer's listing.

1.07 PRE-INSTALLATION MEETING

A. Conduct a pre-installation conference at least one week prior to the work of this section.

1.08 DELIVERY, STORAGE AND HANDLING

A. Deliver, store and handle under provisions specified by manufacturer.
1. At delivery inspect all containers for damage.
2. Examine glass and frame units for damage.
3. List all damage to containers on the shipping company's Bill of Lading.
4. Report damage to manufacturer immediately.
5. Store glazing materials and frame units in original packing containers
6. Do expose glazing material of frame units to sunlight and weather.
7. Do not store horizontally.
8. Place glass and frames upright, no less than 6 degrees from vertical.
9. Store all materials in dry conditions, off the ground.
10. Protect from construction activities.
11. Fully support Glass units along entire length
12. Glass and frame units must be separated by non abrasive pads such as cloth or cork.
13. Do not stack containers

1.09 PROJECT CONDITIONS

A. Obtain field measurements prior to fabrication of frame units. If field measurements will not be available in a timely manner coordinate planned measurements with the work of other sections.
1. Note whether field or planned dimensions were used in the creation of the shop drawings.

1.10 WARRANTY

A. Provide Manufacturer's limited five year warranty dated from Substantial Completion.

**PART 2 - PRODUCTS**

2.01 MANUFACTURERS FIRE RATED WALL ASSEMBLY

A. Manufacturer Glazing Material: See Section 088000.

B. Frame System: "Fireframes® Aluminum Series" fire-rated frame system as manufactured and supplied by Technical Glass Products, 8107 Bracken Place SE, Snoqualmie, WA 98065; phone (800.426.0279): www.fireglass.com.

C. Substitutions: See Section 01600.

2.02 PERFORMANCE REQUIREMENTS

A. System Description:
1. Steel fire-rated glazed wall and/or window system, dual aluminum cover cap format
a. Face width: 2"
b. Custom extruded aluminum cover caps
2. Duration – Windows Capable of providing a fire rating for 45 minutes.
3. Duration – Walls: Capable of providing a fire rating for 60 minutes.

2.03 MATERIALS - GLASS

A. See Section 088000.

NOT FOR BIDDING

## 2.04 MATERIALS –ALUMINUM FRAMES

A. Aluminum Framing System
   1. Steel Frame — The steel framing members are made of two halves, nom. 1.9 in. wide (48.3 mm) with a nom. minimum depth of 1.38 in. (35 mm) with lengths cut according to glazing size.
   2. Aluminum Trim — Supplied with the steel framing members. Nom. 2 in. (50.8 mm) wide with a nom. depth of 1.54 in. (39 mm) with lengths cut according to glazing size.
   3. Stainless Steel Standoffs — Supplied with the steel framing members. Nom 5/16 in. (8 mm) diameter with a nom. minimum depth of 1 1/8 in. (28 mm) with depth adjusted to match glass panel thickness.
   4. Stainless Steel Moment and Connecting Braces: — Supplied with the steel framing members. Nom 3/8 in. (10 mm) thick with a nom. minimum depth of 1 1/8 in. (28 mm) with depth adjusted to match glass panel thickness.
   5. Framing Member Fasteners — Supplied with the steel framing members. Screws are M6 x16mm Button Head Socket Cap Screws for frame assembly and #6 x 1” Pan Head Sheet Metal Screws for door installation.
   6. Glazing Gasket —
      a. Interior Gasketing-Supplied with the steel framing members. Nom. 3/4 in. (19 mm) x 3/16 (4.5 mm) black applied to the steel framing members to cushion and seal the glazing material when installed.

B. Aluminum: Alloy and temper recommended by manufacturer for type of use and finish indicated.
   1. Extruded Bars, Rods, Shapes, and Tubes: ASTM B 221 (ASTM B 221M).

C. Steel Reinforcement: With manufacturer's standard corrosion-resistant primer complying with SSPC-PS Guide No. 12.00 applied immediately after surface preparation and pretreatment. Select surface preparation methods according to recommendations in SSPC-SP COM and prepare surfaces according to applicable SSPC standard.
   1. Structural Shapes, Plates, and Bars: ASTM A 36/A 36M.
   2. Cold-Rolled Sheet and Strip: ASTM A 611.
   3. Hot-Rolled Sheet and Strip: ASTM A 570/A 570M.

D. Fasteners and Accessories: Manufacturer's standard corrosion-resistant, nonstaining, nonbleeding fasteners and accessories compatible with adjacent materials.
   1. Where fasteners are subject to loosening or turn out from thermal and structural movements, wind loads, or vibration, use self-locking devices.
   2. Reinforce members as required to receive fastener threads.

## 2.05 ACCESSORIES

A. Fasteners: Use fasteners fabricated from Type 304 or Type 316 stainless steel.

B. Glazing Gaskets:
   1. Glazing gaskets for interior or exterior applications: ASTM C 864 (extruded EPDM rubber that provides for silicone adhesion) or ASTM C1115 Standard Specification for Dense Elastomeric Silicone Rubber Gaskets and Accessories (extruded silicone).

C. Intumescent Tape: As supplied by frame manufacturer.

D. Setting Blocks: ¼” Calcium silicate.

E. Perimeter Anchors: Steel.

F. Flashings: As recommended by manufacturer; same material and finish as cover caps.

NOT FOR BIDDING

G. Silicone Sealant: One-Part Low Modulus, neutral cure High Movement-Capable Sealant: Type S; Grade NS; Class 25 with additional movement capability of 100 percent in extension and 50 percent in compression (total 150 percent); Use (Exposure) NT; Uses (Substrates) M, G, A, and O as applicable. (Use-O joint substrates include: Metal factory-coated with a high-performance coating; galvanized steel; ceramic tile.)
   1. Available Products:
      a. Dow Corning 790, 795 - Dow Corning Corp.
      b. Momentive
      c. Tremco

H. Intumescent Caulk: Single component, latex-based, intumescent caulk designed to stop passage of fire, smoke, and fumes through fire-rated separations; permanently flexible after cure; will not support mold growth; flame spread/smoke developed 10/10.
   1. Available Products:
      a. 3M CP-25 WP+

2.06 SLAG-WOOL-FIBER/ROCK-WOOL-FIBER INSULATION

A. See Section 072000, Type 6 Insulation.

2.07 FABRICATION

A. Field glaze window assemblies.

B. Fabrication Dimensions: Fabricate fire rated assembly to field dimensions.

C. Obtain approved Shop Drawings prior to fabrication.

2.08 FINISHES, GENERAL

A. Comply with NAAMM's "Metal Finishes Manual for Architectural and Metal Products" for recommendations for applying and designating finishes.

B. Finish frames after assembly.

C. Protect finishes on exposed surfaces from damage by applying a strippable, temporary protective covering before shipping.

D. Appearance of Finished Work: Variations in appearance of abutting or adjacent pieces are acceptable. Noticeable variations in the same piece are not acceptable.

2.09 FACTORY FINISHES

A. Finish after fabrication.

B. Appearance of Finished Work: Variations in appearance of abutting or adjacent pieces are acceptable. Noticeable variations in the same piece are not acceptable.

C. Steel or Aluminum Finishes:
   1. Powder-Coat Finish: Polyester Super Durable powder coating which meets AAMA 2604 for chalking and fading. Apply manufacturer's standard powder coating finish system applied to factory-assembled frames before shipping, complying with manufacturer's recommended instructions for surface preparation including pretreatment, application, and minimum dry film thickness.
   2. Color and Gloss: As selected by Architect from manufacturer's full range.

**PART 3 - EXECUTION**

3.01 EXAMINATION

A. Examine substrates and members to which the work of this section attaches or adjoins prior to frame installation.

NOT FOR BIDDING

B. Confirm openings are plumb, square and within allowable tolerances.

C. Notify Architect of any conditions which jeopardize the integrity of the proposed fire wall / window system.

D. Do not proceed until such conditions are corrected.

3.02 INSTALLATION

A. Install fire window or wall assembly in accordance with manufacturer's written instructions and the approved shop drawings.

B. Install fire safing / fire stopping at edges of system

C. Install glazing in strict accordance with fire resistant glazing material manufacturer's specifications. Field cutting or tampering is not permissible.

D. Do not install damaged frames or chipped glassing units.

E. Install plumb and true. Limit out of plumb or true to 1/8 inch in 10'-0" in any dimension.

3.03 REPAIR AND TOUCH UP

A. Limited to minor repair of small scratches. Use only manufacturer's recommended products.

1. Such repairs shall match original finish for quality of material and view.
2. Repairs and touch-up not visible from a distance of 5 feet Owner and Architect to approve.

B. Remove and replace glass that is broken, chipped, cracked, abraded, or damaged.

3.04 PROTECTION AND CLEANING

A. Protect glass from damage immediately after installation by attaching crossed streamers to framing held away from glass. Do not apply markers to glass surface`. Remove nonpermanent labels, and clean surfaces.

1. Do not clean with astringent cleaners. Use a clean “grit free” cloth and a small amount of mild soap and water or mild detergent.

B. Protect glass from contact with contaminating substances resulting from construction operations, including weld splatter. If, despite such protection, contaminating substances do come into contact with glass, remove them immediately as recommended by glass manufacturer.

C. Wash glass on both exposed surfaces in each area of Project not more than four days before date scheduled for inspections that establish date of Substantial Completion. Wash glass as recommended by glass manufacturer.

**END OF SECTION**

NOT FOR BIDDING

# SECTION 084126
# ALL-GLASS ENTRANCES

## PART 1 GENERAL

### 1.01 SUMMARY

A. Section Includes:
   1. Interior, swinging all-glass entrance doors.
   2. All-glass sidelites.
   3. Door hardware and accessories.

B. Reference Standards:
   1. American Architectural Manufacturers Association (AAMA): AAMA 611 Voluntary Specification for Anodized Architectural Aluminum.
   2. ASTM International (ASTM): ASTM C1048 Standard Specification for Heat-Strengthened and Fully Tempered Flat Glass.
   3. Builders Hardware Manufacturers Association (BHMA): ANSI/BHMA A156 Series.
   4. Code of Federal Regulations: 16 CFR 1201 Safety Standard for Architectural Glazing Materials.
   5. Glass Association of America (GANA): 1999 Fully Tempered Heavy Glass Door and Entrance Systems Design Guide.
      a. Table 3 - Recommended Maximum Interior or Exterior Swinging Door Sizes.
   6. International Code Council (ICC): ICC A117.1 Accessible and Usable Buildings and Facilities (ANSI).

### 1.02 PRE-INSTALLATION MEETINGS

A. Pre-installation Conference: Refer to Division 01 Section "Project Requirements".

### 1.03 SUBMITTALS

A. Product Data: For each type of all-glass entrance component specified. Details of construction relative to materials, dimensions of individual components, profiles, and finishes, including:
   1. Glass panels.
   2. Rail and Patch fittings.
   3. Closer and pivots.
   4. Door hardware and accessories.

B. Shop Drawings: Show details of fabrication and installation, including the following:
   1. Plans, elevations, and sections.
   2. Details of fittings.
   3. Hardware quantities, locations, and installation requirements.
   4. Anchorages and reinforcement.
   5. Glazing details.
   6. Door hardware locations, mounting heights, and installation requirements.

C. Samples for Verification: For each type of exposed finish indicated, prepared on Samples of size indicated below as required by Architect.
   1. Metal Finishes: 6-inch (150-mm) long sections of rail fittings.
   2. Glass: 12-inch (300 mm) square, showing exposed-edge finish and tint.

D. Entrance Door Hardware Schedule: Prepared by or under supervision of supplier, detailing fabrication and assembly of entrance door hardware, as well as procedures and diagrams.Coordinate final entrance door hardware schedule with doors, sidelites, transoms, and

NOT FOR BIDDING

related work to ensure proper size, thickness, hand, function, and finish of entrance door hardware.

E. Maintenance Data: For all-glass systems to include in maintenance manuals.

1.04 QUALITY ASSURANCE

A. Installer Qualifications: Engage an experienced installer to perform work of this Section who has specialized in installing all-glass entrances similar to those required for this Project and with a record of successful in-service performance.

B. Supplier and Installer Qualifications: Authorized or certified by manufacturer for installing, servicing, and warranting the product specified for the project.

C. Source Limitations: Obtain each type of all-glass entrance doors through one source from a single manufacturer.

D. Product Options: Drawings indicate size, profiles, and dimensional requirements of all-glass entrances and are based on the specific system indicated. Other manufacturers' systems with equal performance characteristics may be considered. Refer to Division 01 Section "Product Requirements."

1.05 PROJECT CONDITIONS

A. Field Measurements: Verify opening dimensions of all glass entrances by field measurements before fabrication and indicate measurements on Shop Drawings. Coordinate fabrication schedule with construction progress to avoid delaying the Work.

1.06 WARRANTY

A. General Warranty: The special warranty specified in this Article shall not deprive the Owner of other rights the Owner may have under other provisions of the Contract Documents and shall be in addition to, and run concurrent with, other warranties made by the Contractor under requirements of the Contract Documents.

B. Special Warranty: Submit a written warranty executed by the manufacturer agreeing to repair or replace components of all-glass entrances that fail in materials or workmanship within the specified warranty period. Failures include, but are not limited to, the following:

1. Structural failures.
2. Deterioration of metals, metal finishes, and other materials beyond normal weathering.
3. Failure of operating components to function normally.

C. General Warranty Period: Two years from date of Substantial Completion.

**PART 2 PRODUCTS**

2.01 PERFORMANCE REQUIREMENTS

A. General Performance: Comply with performance requirements specified, as determined by testing of all-glass entrances and storefronts representing those indicated for this Project without failure due to defective manufacture, fabrication, installation, or other defects in construction.

B. Accessibility Standards: Comply with applicable provisions in Accessibility Guidelines for Buildings and Facilities ICC (ANSI) A117.1 and requirements of authorities having jurisdiction.

2.02 MANUFACTURERS

A. Basis-of-Design Products: Subject to compliance with requirements, provide the named product, or the comparable product by one of the alternate specified manufacturers.

NOT FOR BIDDING

Comparable products are subject to review and approval through the submittal process specified.

B. Manufacturers (All Glass Doors):
   1. Basis of Design: ASSA ABLOY Glass Solutions (All Glass Door components): www.assaabloyglass.us.
   2. C.R. Laurence Co., Inc. (CRL): www.crlaurence.com
   3. Substitutions: See Section 016000.

2.03 ENTRANCE DOOR MATERIALS

A. Clear Glass: ASTM C 1048, Kind FT (fully tempered), Condition A (uncoated surfaces), Type I (transparent), Class 1 (clear) requirements. Provide products of thickness indicated that have been tested for surface and edge compression according to ASTM C 1048 and for impact strength according to CPSC 16 CFR, Part 1201 for Category II materials.
   1. Thickness: 1/2 inch (13 mm).
   2. Exposed Edges: Flat polished.
   3. Butt Edges: Flat polished.
   4. Corner Edges: Mitered.

B. Aluminum: Alloy and temper recommended by manufacturer for use and finish indicated, but not less than the strength and durability properties of ASTM B 221 (M), alloy 6063-T5.

C. Stainless-Steel Cladding: ASTM A 666, Type 302 or Type 304.

2.04 ENTRANCE DOOR COMPONENTS

A. Rails: Manufacturer's standard continuous horizontal fittings and as follows:
   1. Rail Locations: As follows:
      a. Door tops and bottoms.
      b. Sidelite tops. Provide with manufacturer's standard fixed-mounting system.
      c. Sidelite bottoms. Provide with manufacturer's standard fixed-mounting system.
   2. Top Rail Height: 4 inch tapered (102 mm).
   3. Top Rail Profile: Tapered no less than 60 degrees from horizontal.
   4. Bottom Rail Height: 4 inch tapered.
   5. Bottom Rail Profile: Tapered no less than 60 degrees from horizontal.
   6. One piece dry glazed compression system that accommodates 3/8” to 9/16” thick glass.
   7. End Caps: One-piece solid stainless steel, beveled.
   8. Material: Bright or satin stainless-steel-cladding.

B. Anchors and Fastenings: Manufacturer's standard concealed anchors and fastenings.

2.05 ENTRANCE DOOR HARDWARE

A. General: Heavy-duty entrance door hardware units in sizes, quantities, and types recommended by manufacturer for all-glass entrance systems indicated. For exposed parts, match metal and finish of patch fittings and rail fittings.

B. Refer to section 080671 “Door Hardware Schedule” for specific hardware sets.

C. Pivots: ANSI/BHMA A156.4, Grade 1.
   1. Bottom Pivots:
      a. End load type (bottom rails).
   2. Manufacturers:
      a. ASSA ABLOY Glass Solutions (GS) - PV and PF Series.

NOT FOR BIDDING

D. Door Pulls, Dummy and Mating Pulls: Door pushes and pulls of type and design specified in the Hardware Sets. Coordinate and provide proper width and height as required where conflicting hardware dictates.
   1. Minimum clearance of 2 1/2-inches from face of door unless otherwise indicated.
   2. Fasteners: Provide manufacturer's designated fastener type as indicated in hardware sets.
   3. Manufacturers:
      a. ASSA ABLOY Glass Solutions (GS) – RM3301-12.

E. Overhead Concealed Closers (Heavy Duty): Center hung, BHMA A156.4, Grade 2 units including arms, pivots, cover plates, mounting clips, and accessories required for complete installation. Provide separate closing and latching valves for closing speed, latch speed, backcheck.
   1. Compact cast iron closers capable of being fully concealed in the frame head for center hung applications.
   2. Size of Units: Comply with manufacturer's written recommendations for sizing of door closers depending on size of door, interior or exterior application, and exposure to weather, and anticipated frequency of use.
   3. Closer Accessories: Provide door closer accessories including custom spindles and templates as required for proper installation.
   4. Double acting, non-handed with spring power size 4.
   5. Manufacturers:
      a. ASSA ABLOY Glass Solutions (GS) - OHC 104 Series.

2.06 FABRICATION

A. General: Fabricate all-glass entrance components in sizes, profiles, and configurations indicated on Drawings.

B. Provide holes and cutouts in glass to receive hardware, fittings, and accessory fittings before tempering glass. Do not cut, drill, or make other alterations to glass after tempering.
   1. Fully temper glass using horizontal (roller-hearth) process, and fabricate so that when glass is installed, roll-wave distortion is parallel with bottom edge of door or lite.

C. Factory assemble components and factory install hardware and fittings to greatest extent possible.

2.07 FINISHES

A. General: Comply with NAAMM's "Metal Finishes Manual for Architectural and Metal Products" for recommendations relative to applying and designating finishes.

B. Protect mechanical finishes on exposed surfaces from damage by applying a strippable, temporary protective covering before shipment.

2.08 ALUMINUM FINISHES

A. Finish designations prefixed by AA conform to the system established by the Aluminum Association for designating aluminum finishes.

B. Clear Anodic Finish: AA-M21C22A41 (Mechanical Finish: smooth specular, buffed; Chemical Finish: etched, medium matte; Anodic Coating: Comply with AAMA 611.

**PART 3 EXECUTION**

3.01 EXAMINATION

A. Examine areas and conditions, with Installer present, for compliance with requirements for installation tolerances and other conditions affecting performance of the Work.

NOT FOR BIDDING

B. Proceed with installation only after unsatisfactory conditions have been corrected.

3.02 DOOR INSTALLATION

A. General: Comply with all-glass entrance manufacturer's written installation instructions and approved shop drawings.

B. Install all-glass door assemblies after other finishing operations have been completed. Coordinate installation of recesses housings with installation of adjacent finishes.

C. Set units level, plumb, and true to line, with uniform joints.

D. Maintain uniform clearances between adjacent components.

E. Set, seal, and grout floor closer cases as required to suit hardware and substrate indicated.

F. Install butt-joint sealants according to manufacturer's instructions and as specified in Section 079200 "Joint Sealants" to produce weathertight installation.

3.03 ADJUSTING AND CLEANING

A. Adjust all-glass entrance doors and hardware to produce smooth operation and tight fit at contact points and weather stripping.

B. Remove excess sealant and glazing compounds and dirt from surfaces.

3.04 PROTECTION

A. Provide final protection and maintain conditions, in a manner acceptable to manufacturer and Installer that ensure all-glass entrances are without damage or deterioration at the time of Substantial Completion.

**END OF SECTION**

NOT FOR BIDDING

# SECTION 084313
# ALUMINUM-FRAMED STOREFRONTS

## PART 1 GENERAL

1.01 SECTION INCLUDES

A. Aluminum-framed storefront, with vision glass.

B. Infill panels of metal and glass.

C. Aluminum doors and frames.

D. Weatherstripping.

1.02 RELATED REQUIREMENTS

A. Section 079200 - Joint Sealants: Sealing joints between frames and adjacent construction.

B. Section 084123 - Fire Rated Aluminum-Framed Storefronts

C. Section 087100 - Door Hardware: Hardware items other than specified in this section.

D. Section 088000 - Glazing: Glass and glazing accessories.

1.03 REFERENCE STANDARDS

A. AAMA CW-10 - Care and Handling of Architectural Aluminum From Shop to Site; 2015.

B. AAMA 503 - Voluntary Specification for Field Testing of Newly Installed Storefronts, Curtain Walls and Sloped Glazing Systems; 2014.

C. AAMA 609 & 610 - Cleaning and Maintenance Guide for Architecturally Finished Aluminum (Combined Document); 2015.

D. AAMA 1503 - Voluntary Test Method for Thermal Transmittance and Condensation Resistance of Windows, Doors and Glazed Wall Sections; 2009.

E. AAMA 2605 - Voluntary Specification, Performance Requirements and Test Procedures for Superior Performing Organic Coatings on Aluminum Extrusions and Panels (with Coil Coating Appendix); 2013.

F. ASCE 7 - Minimum Design Loads for Buildings and Other Structures; 2010, with 2013 Supplements and Errata.

G. ASTM B209 - Standard Specification for Aluminum and Aluminum-Alloy Sheet and Plate; 2014.

H. ASTM B209M - Standard Specification for Aluminum and Aluminum-Alloy Sheet and Plate (Metric); 2014.

I. ASTM B221 - Standard Specification for Aluminum and Aluminum-Alloy Extruded Bars, Rods, Wire, Profiles, and Tubes; 2014.

J. ASTM B221M - Standard Specification for Aluminum and Aluminum-Alloy Extruded Bars, Rods, Wire, Profiles, and Tubes (Metric); 2013.

K. ASTM E283 - Standard Test Method for Determining the Rate of Air Leakage Through Exterior Windows, Curtain Walls, and Doors Under Specified Pressure Differences Across the Specimen; 2004 (Reapproved 2012).

L. ASTM E330/E330M - Standard Test Method for Structural Performance of Exterior Windows, Doors, Skylights and Curtain Walls by Uniform Static Air Pressure Difference; 2014.

M. ASTM E331 - Standard Test Method for Water Penetration of Exterior Windows, Skylights, Doors, and Curtain Walls by Uniform Static Air Pressure Difference; 2000 (Reapproved 2016).

NOT FOR BIDDING

N. ASTM E783 - Standard Test Method for Field Measurement of Air Leakage Through Installed Exterior Windows and Doors; 2002 (Reapproved 2010).

O. ASTM E1105 - Standard Test Method for Field Determination of Water Penetration of Installed Exterior Windows, Skylights, Doors, and Curtain Walls, by Uniform or Cyclic Static Air Pressure Difference; 2015.

1.04 ADMINISTRATIVE REQUIREMENTS

A. Coordinate with installation of other components that comprise the exterior enclosure.

B. Preinstallation Meeting: Conduct a preinstallation meeting one week before starting work of this section; require attendance by all affected installers.

1.05 SUBMITTALS

A. See Section 013000 - Administrative Requirements, for submittal procedures.

B. Product Data: Provide component dimensions, describe components within assembly, anchorage and fasteners, glass and infill, internal drainage details.

C. Shop Drawings: Indicate system dimensions, framed opening requirements and tolerances, affected related work, expansion and contraction joint location and details, and field welding required.

D. Samples: Submit two samples 12 by 12 inches in size illustrating finished aluminum surface, glass, infill panels, glazing materials.

E. Manufacturer's Certificate: Certify that the products supplied meet or exceed the specified requirements.

F. Field Quality Control Submittals: Report of field testing for water penetration and air leakage.

G. Warranty: Submit manufacturer warranty and ensure forms have been completed in Owner's name and registered with manufacturer.

1.06 QUALITY ASSURANCE

A. Manufacturer Qualifications: Company specializing in performing work of type specified and with at least three years of documented experience.

B. Installer Qualifications: Company specializing in performing work of type specified and with at least three years of documented experience.

1.07 MOCK-UP

A. See Section 014000 - Quality Requirements, for general requirements for mock-ups.

B. Provide two (2) full-size storefront units for mock-up including all components occurring on project. Assemble to illustrate component assembly including glazing materials, weep drainage system, attachments, anchors, and perimeter sealant.

1. Refer to Drawings for additional information.

C. Locate on-site where directed by Architect; mock-up may not remain as part of the Work.

1.08 DELIVERY, STORAGE, AND HANDLING

A. Handle products of this section in accordance with AAMA CW-10.

B. Protect finished aluminum surfaces with wrapping. Do not use adhesive papers or sprayed coatings that bond to aluminum when exposed to sunlight or weather.

1.09 FIELD CONDITIONS

A. Do not install sealants when ambient temperature is less than 40 degrees F. Maintain this minimum temperature during and 48 hours after installation.

NOT FOR BIDDING

1.10 WARRANTY

A. Correct defective Work within a one year period after Date of Substantial Completion.

B. Provide five year manufacturer warranty against failure of glass seal on insulating glass units, including interpane dusting or misting. Include provision for replacement of failed units.

C. Provide twenty year manufacturer warranty against excessive degradation of exterior finish. Include provision for replacement of units with excessive fading, chalking, or flaking.

**PART 2 PRODUCTS**

2.01 BASIS OF DESIGN -- FRAMING FOR INSULATING GLAZING

A. Locations: All storefront locations in exterior building envelope and where insulating glass is scheduled.

B. Manufacturer and Product: Kawneer Trifab 451UT Storefront System: www.kawneer.com.

C. Storefront Framing System:

1. Description: Center set, exterior flush glazed; jambs and vertical mullions continuous; head, sill, intermediate horizontal attached by screw spline joinery.
2. Components: Manufacturer's standard extruded aluminum mullions, 90 degree corner posts, entrance door framing, and indicated shapes.
3. Dual Thermal Barrier: Provide dual continuous thermal barriers by means of poured and debridged pockets consisting of a two-part, chemically curing high density polyurethane which is bonded to the aluminum.
4. Vertical Mullion Dimensions: 2 inches wide by 4-1/2 inches deep.

D. Other Manufacturers: Provide either the product identified as "Basis of Design" or an equivalent product of another manufacturer with approved submittal meeting the design criteria..

1. YKK AP America Inc: www.ykkap.com.
2. Oldcastle Building Envelope: www.obe.com.
3. EFCO Corporation: www.efcocorp.com.

E. Substitutions: See Section 016000 - Product Requirements.

1. For any product not identified as "Basis of Design", submit information as specified for substitutions.

2.02 BASIS OF DESIGN -- FRAMING FOR NON-INSULATING GLAZING

A. Locations: Interior locations where single pane glass is scheduled.

B. Manufacturer and Product: Kawneer Trifab 451 Storefront System: www.kawneer.com.

C. Storefront Framing System:

1. Description: Center set, flush glazed; jambs and vertical mullions continuous; head, sill, intermediate horizontal attached by screw spline joinery.
2. Components: Manufacturer's standard extruded aluminum mullions, 90 degree corner posts, entrance door framing, glazing adapters, and indicated shapes.
3. Vertical Mullion Dimensions: 2 inches wide by 4-1/2 inches deep.

D. Other Manufacturers: Provide either the product identified as "Basis of Design" or an equivalent product of another manufacturer with approved submittal meeting the design criteria..

1. YKK AP America Inc: www.ykkap.com.
2. Oldcastle Building Envelope: www.obe.com.
3. EFCO Corporation: www.efcocorp.com.

NOT FOR BIDDING

E. Substitutions: See Section 016000 - Product Requirements.
   1. For any product not identified as "Basis of Design", submit information as specified for substitutions.

2.03 BASIS OF DESIGN -- SWINGING DOORS

A. Wide Stile, Insulating Glazing, Not Thermally-Broken:
   1. Basis of Design: Kawneer 500 Heavy Wall Entrances: www.kawneer.com.
   2. Thickness: 2 inches.
   3. Wall thickness: 3/16 inches.

B. Other Manufacturers: Provide either the product identified as "Basis of Design" or an equivalent product of another manufacturer with approved submittal meeting the design criteria..
   1. YKK AP America Inc: www.ykkap.com.
   2. Oldcastle Building Envelope: www.obe.com.
   3. EFCO Corporation: www.efcocorp.com.

C. Substitutions: See Section 016000 - Product Requirements.

2.04 STOREFRONT

A. Aluminum-Framed Storefront: Factory fabricated, factory finished aluminum framing members with infill, and related flashings, anchorage and attachment devices.
   1. Finish: Superior performing organic coatings.
      a. Factory finish all surfaces that will be exposed in completed assemblies.
      b. Touch-up surfaces cut during fabrication so that no natural aluminum is visible in completed assemblies, including joint edges.
      c. Coat concealed metal surfaces that will be in contact with cementitious materials or dissimilar metals with bituminous paint.
   2. Finish Color: As selected by Architect from manufacturer's standard line.
   3. Fabrication: Joints and corners flush, hairline, and weatherproof, accurately fitted and secured; prepared to receive anchors and hardware; fasteners and attachments concealed from view; reinforced as required for imposed loads.
   4. Construction: Eliminate noises caused by wind and thermal movement, prevent vibration harmonics, and prevent "stack effect" in internal spaces.
   5. System Internal Drainage: Drain to the exterior by means of a weep drainage network any water entering joints, condensation occurring in glazing channel, and migrating moisture occurring within system.
   6. Expansion/Contraction: Provide for expansion and contraction within system components caused by cycling temperature range of 170 degrees F over a 12 hour period without causing detrimental effect to system components, anchorages, and other building elements.
   7. Movement: Allow for movement between storefront and adjacent construction, without damage to components or deterioration of seals.
   8. Perimeter Clearance: Minimize space between framing members and adjacent construction while allowing expected movement.
   9. Air and Vapor Seal: Maintain continuous air barrier and vapor retarder throughout assembly, primarily in line with inside pane of glazing and inner sheet of infill panel and heel bead of glazing compound.

B. Performance Requirements for Thermally-Broken Storefront System:

NOT FOR BIDDING

1. Wind Loads: Design and size components to withstand the specified load requirements without damage or permanent set, when tested in accordance with ASTM E330/E330M, using loads 1.5 times the design wind loads and 10 second duration of maximum load.
   a. Design Wind Loads: Comply with requirements of ASCE 7.
   b. See structural drawings for lateral load design factors.
   c. Member Deflection: Limit member deflection to flexure limit of glass in any direction, with full recovery of glazing materials.
2. Water Penetration Resistance: No uncontrolled water on interior face, when tested in accordance with ASTM E331 at pressure differential of 10 psf. Fastener Heads must be seated and sealed against sill flashing or any fasteners that penetrate through the sill flashing.
3. Air Leakage Laboratory Test: Maximum of 0.06 cu ft/min sq ft of wall area, when tested in accordance with ASTM E283 at 6.27 psf pressure differential across assembly.
4. Condensation Resistance Factor of Framing: 66, minimum, measured in accordance with AAMA 1503.
5. Overall U-value Including Low-E Glazing: 0.36 Btu/(hr sq ft deg F), maximum.

2.05 COMPONENTS

A. Aluminum Framing Members: Tubular aluminum sections, thermally broken with interior section insulated from exterior, drainage holes and internal weep drainage system.
   1. Framing members for interior applications need not be thermally broken.
   2. Glazing Stops: Flush.

B. Glazing: As specified in Section 088000.

C. Infill Panels: Insulated, aluminum sheet face and back, with edges formed to fit glazing channel and sealed.
   1. Thickness: 1 inch (25 mm).
   2. Substrate: high density tempered hardboard and impact resistant layer
   3. Core: Rigid polyisocyanurate insulation.
   4. Interior and Exterior Finish: Superior performance organic coating, custom color to match Architect's sample.
   5. Manufacturers: Mapes Industries, Inc.

2.06 MATERIALS

A. Extruded Aluminum: ASTM B221 (ASTM B221M).

B. Sheet Aluminum: ASTM B209 (ASTM B209M).

C. Fasteners: Stainless steel.

D. Exposed Flashings: Aluminum sheet, 11 gage, 0.125 inch minimum thickness; finish to match framing members.

E. Sill Flashing Sealant: Silicone, compatible with flashing material.

F. Sealant for Setting Thresholds: Non-curing butyl type.

G. Glazing Gaskets: Type to suit application to achieve weather, moisture, and air infiltration requirements.

2.07 FINISHES

A. Superior Performing Organic Coatings: AAMA 2605 multiple coat, thermally cured polyvinylidene fluoride (PVDF) system.

NOT FOR BIDDING

1. Polyvinylidene fluoride (PVDF) multi-coat thermoplastic fluoropolymer coating system, including minimum 70 percent PVDF color topcoat and minimum total dry film thickness of 1.2 mil; color and gloss as selected from manufacturer's standard line.

**PART 3 EXECUTION**

3.01 EXAMINATION

A. Verify dimensions, tolerances, and method of attachment with other work.

B. Verify that wall openings and adjoining air and vapor seal materials are ready to receive work of this section.

3.02 INSTALLATION

A. Install wall system in accordance with manufacturer's instructions.

B. Attach to structure to permit sufficient adjustment to accommodate construction tolerances and other irregularities.

C. Provide alignment attachments and shims to permanently fasten system to building structure.

D. Align assembly plumb and level, free of warp or twist. Maintain assembly dimensional tolerances, aligning with adjacent work.

E. Provide thermal isolation where components penetrate or disrupt building insulation.

F. Install sill flashings. Extend extruded flashing continuous with splice joints; set in continuous bed of sealant. Turn up ends and edges; seal to adjacent work to form water tight dam.

G. Where fasteners penetrate sill flashings, make watertight by seating and sealing fastener heads to sill flashing.

H. Locate expansion mullions where indicated on reviewed shop drawings.

I. Pack fibrous insulation in shim spaces at perimeter of assembly to maintain continuity of thermal barrier.

J. Fill shim spaces at perimeter of assembly with low-rise foam insulation to maintain continuity of thermal barrier.

K. Set thresholds in bed of sealant and secure.

L. Install glass and infill panels in accordance with Section 088000, using glazing method required to achieve performance criteria.

M. Touch up minor damage to factory applied finish; replace components that cannot be satisfactorily repaired.

3.03 TOLERANCES

A. Maximum Variation from Plumb: 0.06 inch per 3 feet non-cumulative or 0.06 inch per 10 feet, whichever is less.

B. Maximum Misalignment of Two Adjoining Members Abutting in Plane: 1/32 inch.

3.04 FIELD QUALITY CONTROL

A. Provide field testing of installed storefront system by AAMA accredited independent laboratory in accordance with AAMA 503 during construction process and before installation of interior finishes.

1. Perform a minimum of one test of Storefront Elevation SF01. Test location:as directed by Architect.
2. Conduct tests prior to 10 percent completion of this work.

NOT FOR BIDDING

3. Field test for water penetration in accordance with ASTM E1105 with uniform static air pressure difference (Procedure A) not less than 6.67 psf.
    a. Maximum allowable rate of water penetration in 15-minute test is 0.5 ounce that is not contained in an area with provisions to drain to exterior, or collected on surface of interior horizontal framing member.
4. Field test for air leakage in accordance with ASTM E783 with uniform static air pressure difference of 6.20 psf.
    a. Maximum allowable rate of air leakage is 1.5 times specified rate of 0.06 cfm/sq ft.

B. Repair or replace storefront components that have failed designated field testing, and retest to verify performance complies with specified requirements.

3.05 CLEANING

A. Remove protective material from pre-finished aluminum surfaces.

B. Wash down surfaces with a solution of mild detergent in warm water, applied with soft, clean wiping cloths, and take care to remove dirt from corners and to wipe surfaces clean.

C. Upon completion of installation, thoroughly clean aluminum surfaces in accordance with AAMA 609 & 610.

3.06 PROTECTION

A. Protect installed products from damage until Date of Substantial Completion.

**END OF SECTION**

NOT FOR BIDDING

# SECTION 085674
# ACOUSTICALLY RATED CONTROL ROOM WINDOWS

## PART 1 GENERAL

1.01 SECTION INCLUDES

A. Single track, horizontal sliding window with a minimum acoustical laboratory rating of STC-35. No structural center post is acceptable. Center window panes shall have pile inserts at meeting stile to create a tight seal to each other when closed. All perimeter, intermediate and center stile interfaces shall be sealed with pile or neoprene weather-stripping. Sash shall be removable to the inside for cleaning.

B. Single glazed acoustical window shall be factory glazed and sealed. Window system shall include: glass, aluminum framing and trim, sound deadening treatments, desiccants and all accessory items as shown on the drawings and required for a complete installation, including caulking and anchorage to adjacent construction.

C. Low-iron, ultra clear glass in Projection Room.

1.02 RELATED REQUIREMENTS

A. Section 079200 - Joint Sealants: Perimeter sealants and backup materials

B. Section 088000 - Glazing

1.03 SUBMITTALS

A. See Section 01 3000 - Administrative Requirements, for submittal procedures.

B. Shop drawings of the glass, frame, hardware and seals showing major operating dimensions and cross-sections of windows and seals.

C. Certified test reports indicating the acoustical performance of the window meets the Sound Transmission Class (STC) performance called out in the schedule or drawings. Test data shall be produced from an accredited independent acoustical laboratory. Reports should indicate that the test was performed on the window assembly of the type to be supplied in conformance with the requirements of test method ASTM E90-75,81,85,87 (or most current year of test methodology). Test data shall indicate type of hardware used on the window. Manufacturer shall indicate whether additional treatment of the window frame, by the insertion of grout or high density glass/mineral fiber in the cavity between frame and wall, shall be necessary to meet the acoustical requirements of this specification. Acoustical consultant shall be the judge of technical acceptability of these data.

D. Written guarantee that the window is constructed in accordance with the laboratory tested window and free of defects in material and workmanship for a period of one year after installation.

1.04 FIELD CONDITIONS

A. Environmental Requirements: Ensure ambient and surface temperatures and joint conditions are suitable for installation of materials.

## PART 2 PRODUCTS

2.01 MANUFACTURERS

A. Series 450 by Mon-Ray, Inc., Minneapolis, MN 800-544-3646 www.monray.com

B. Series 9540 by Peerless Products, Inc., Shawnee Mission, KS 800-279-9999 www.peerlessproducts.com

C. Series 4100 by Wausau Windows, Wausau, WI 715-845-2161 www.wausauwindow.com

NOT FOR BIDDING

D. Substitutions: See Section 01 6000 - Product Requirements.

2.02 GLASS

A. Lite shall be clear 1" tempered insulating glass.

2.03 FRAMES

A. Frame shall be identical to that of the acoustically tested unit. Frame shall be free of defects impairing strength and durability. Approximate frame depth to be 4-1/2". Finish shall be selected by the Architect.

**PART 3 EXECUTION**

3.01 EXAMINATION

A. Verify existing conditions before starting work.

B. Verify dimensions, tolerances, and method of attachment with other work.

3.02 INSTALLATION

A. The acoustical window shall be installed under direct supervision of the manufacturer or his representative using skilled mechanics. Anchorage to the building structure shall be in accordance with approved Shop Drawings.

B. The perimeter of each window shall be caulked on both sides. The caulking shall be performed as a part of this work to insure overall performance of the window system.

3.03 ADJUSTING

A. Adjust operating sash and hardware to provide tight fit at contact points and seals for smooth operation and seal closure. Lubricate hardware and moving parts as necessary.

3.04 CLEANING

A. Clean surfaces in compliance with manufacturer's recommendations; remove excess mastic, mastic smears, foreign materials or other unsightly marks.

B. Clean metal surfaces, exercising care to avoid damage.

**END OF SECTION**

NOT FOR BIDDING

SECTION 087100

DOOR HARDWARE

PART 1 - GENERAL

1.1 SUMMARY

A. This Section includes commercial door hardware for the following:
   1. Swinging doors.
   2. Other doors to the extent indicated.

B. Door hardware includes, but is not necessarily limited to, the following:
   1. Mechanical door hardware.
   2. Electromechanical door hardware.
   3. Cylinders specified for doors in other sections.

C. Codes and References: Comply with the version year adopted by the Authority Having Jurisdiction.
   1. ANSI A117.1 - Accessible and Usable Buildings and Facilities.
   2. ICC/IBC - International Building Code.
   3. NFPA 70 - National Electrical Code.
   4. NFPA 80 - Fire Doors and Windows.
   5. NFPA 101 - Life Safety Code.
   6. NFPA 105 - Installation of Smoke Door Assemblies.
   7. State Building Codes, Local Amendments.

D. Standards: All hardware specified herein shall comply with the following industry standards:
   1. ANSI/BHMA Certified Product Standards - A156 Series
   2. UL10C – Positive Pressure Fire Tests of Door Assemblies

1.2 SUBMITTALS

A. Product Data: Manufacturer's product data sheets including installation details, material descriptions, dimensions of individual components and profiles, operational descriptions and finishes.

B. Door Hardware Schedule: Prepared by or under the supervision of supplier, detailing fabrication and assembly of door hardware, as well as procedures and diagrams. Coordinate the final Door Hardware Schedule with doors, frames, and related work to ensure proper size, thickness, hand, function, and finish of door hardware.
   1. Format: Comply with scheduling sequence and vertical format in DHI's "Sequence and Format for the Hardware Schedule."
   2. Organization: Organize the Door Hardware Schedule into door hardware sets indicating complete designations of every item required for each door or opening. Organize door hardware sets in same order as in the Door Hardware Sets at the end of Part 3. Submittals that do not follow the same format and order as the Door Hardware Sets will be rejected and subject to resubmission.
   3. Content: Include the following information:
      a. Type, style, function, size, label, hand, and finish of each door hardware item.

NOT FOR BIDDING

b. Manufacturer of each item.
c. Fastenings and other pertinent information.
d. Location of door hardware set, cross-referenced to Drawings, both on floor plans and in door and frame schedule.
e. Explanation of abbreviations, symbols, and codes contained in schedule.
f. Mounting locations for door hardware.
g. Door and frame sizes and materials.
h. Warranty information for each product.

4. Submittal Sequence: Submit the final Door Hardware Schedule at earliest possible date, particularly where approval of the Door Hardware Schedule must precede fabrication of other work that is critical in the Project construction schedule. Include Product Data, Samples, Shop Drawings of other work affected by door hardware, and other information essential to the coordinated review of the Door Hardware Schedule.

C. Shop Drawings: Details of electrified access control hardware indicating the following:
1. Wiring Diagrams: Upon receipt of approved schedules, submit detailed system wiring diagrams for power, signaling, monitoring, communication, and control of the access control system electrified hardware. Differentiate between manufacturer-installed and field-installed wiring. Include the following:
a. Elevation diagram of each unique access controlled opening showing location and interconnection of major system components with respect to their placement in the respective door openings.
b. Complete (risers, point-to-point) access control system block wiring diagrams.
c. Wiring instructions for each electronic component scheduled herein.
2. Electrical Coordination: Coordinate with related sections the voltages and wiring details required at electrically controlled and operated hardware openings.

D. Keying Schedule: After a keying meeting with the owner has taken place prepare a separate keying schedule detailing final instructions. Submit the keying schedule in electronic format. Include keying system explanation, door numbers, key set symbols, hardware set numbers and special instructions. Owner must approve submitted keying schedule prior to the ordering of permanent cylinders/cores.

E. Informational Submittals:
1. Product Test Reports: Indicating compliance with cycle testing requirements, based on evaluation of comprehensive tests performed by manufacturer and witnessed by a qualified independent testing agency.

F. Operating and Maintenance Manuals: Provide manufacturers operating and maintenance manuals for each item comprising the complete door hardware installation in quantity as required in Division 01, Closeout Submittals.

## 3. QUALITY ASSURANCE

A. Manufacturers Qualifications: Engage qualified manufacturers with a minimum 5 years of documented experience in producing hardware and equipment similar to that indicated for this Project and that have a proven record of successful in-service performance.

B. Installer Qualifications: A minimum 3 years documented experience installing both standard and electrified door hardware similar in material, design, and extent to that indicated for this Project and whose work has resulted in construction with a record of successful in-service performance.

C. Door Hardware Supplier Qualifications: Experienced commercial door hardware distributors with a minimum 5 years documented experience supplying both mechanical and

NOT FOR BIDDING

electromechanical hardware installations comparable in material, design, and extent to that indicated for this Project. Supplier recognized as a factory direct distributor by the manufacturers of the primary materials with a warehousing facility in Project's vicinity. Supplier to have on staff a certified Architectural Hardware Consultant (AHC) available during the course of the Work to consult with Contractor, Architect, and Owner concerning both standard and electromechanical door hardware and keying.

D. Integrated Wiegand, Wireless, and IP-Enabled Access Control Products Supplier Qualifications: Integrated access control products and accessories are required to be supplied and installed through current members of the ASSA ABLOY "Authorized Channel Partner" (ACP) and "Certified Integrator" (CI) programs. Suppliers are to be factory trained, certified prior to project bid, and a direct purchaser of the specified product. Installers are to be factory trained, certified prior to project bid, and are responsible for commissioning, servicing, and warranting the installed equipment specified for the project.

E. Source Limitations: Obtain each type and variety of door hardware specified in this section from a single source unless otherwise indicated.
   1. Electrified modifications or enhancements made to a source manufacturer's product line by a secondary or third party source will not be accepted.
   2. Provide electromechanical door hardware from the same manufacturer as mechanical door hardware, unless otherwise indicated.

F. Each unit to bear third party permanent label demonstrating compliance with the referenced standards.

G. Keying Conference: Conduct conference to comply with requirements in Division 01 Section "Project Meetings." Keying conference to incorporate the following criteria into the final keying schedule document:
   1. Function of building, purpose of each area and degree of security required.
   2. Plans for existing and future key system expansion.
   3. Requirements for key control storage and software.
   4. Installation of permanent keys, cylinder cores and software.
   5. Address and requirements for delivery of keys.

H. Pre-Submittal Conference: Conduct coordination conference in compliance with requirements in Division 01 Section "Project Meetings" with attendance by representatives of Supplier(s), Installer(s), and Contractor(s) to review proper methods and the procedures for receiving, handling and installing door hardware.
   1. Prior to installation of door hardware, conduct a project specific training meeting to instruct the installing contractors' personnel on the proper installation and adjustment of their respective products. Product training to be attended by installers of door hardware (including electromechanical hardware) for aluminum, hollow metal and wood doors. Training will include the use of installation manuals, hardware schedules, templates and physical product samples as required.
   2. Inspect and discuss electrical roughing-in, power supply connections, and other preparatory work performed by other trades.
   3. Review sequence of operation narratives for each unique access controlled opening.
   4. Review and finalize construction schedule and verify availability of materials.
   5. Review the required inspecting, testing, commissioning, and demonstration procedures

I. At completion of installation, provide written documentation that components were applied to manufacturer's instructions and recommendations and according to approved schedule.

NOT FOR BIDDING

1.4 DELIVERY, STORAGE, AND HANDLING

A. Inventory door hardware on receipt and provide secure lock-up and shelving for door hardware delivered to Project site. Do not store electronic access control hardware, software or accessories at Project site without prior authorization.

B. Tag each item or package separately with identification related to the final Door Hardware Schedule, and include basic installation instructions with each item or package.

C. Deliver, as applicable, permanent keys, cylinders, cores, access control credentials, software and related accessories directly to Owner via registered mail or overnight package service. Instructions for delivery to the Owner shall be established at the "Keying Conference".

1.5 COORDINATION

A. Templates: Obtain and distribute to the parties involved templates for doors, frames, and other work specified to be factory prepared for installing standard and electrified hardware. Check Shop Drawings of other work to confirm that adequate provisions are made for locating and installing hardware to comply with indicated requirements.

B. Door Hardware and Electrical Connections: Coordinate the layout and installation of scheduled electrified door hardware and related access control equipment with required connections to source power junction boxes, low voltage power supplies, detection and monitoring hardware, and fire and detection alarm systems.

C. Door and Frame Preparation: Doors and corresponding frames are to be prepared, reinforced and pre-wired (if applicable) to receive the installation of the specified electrified, monitoring, signaling and access control system hardware without additional in-field modifications.

1.6 WARRANTY

A. General Warranty: Reference Division 01, General Requirements. Special warranties specified in this Article shall not deprive Owner of other rights Owner may have under other provisions of the Contract Documents and shall be in addition to, and run concurrent with, other warranties made by Contractor under requirements of the Contract Documents.

B. Warranty Period: Written warranty, executed by manufacturer(s), agreeing to repair or replace components of standard and electrified door hardware that fails in materials or workmanship within specified warranty period after final acceptance by the Owner. Failures include, but are not limited to, the following:

1. Structural failures including excessive deflection, cracking, or breakage.
2. Faulty operation of the hardware.
3. Deterioration of metals, metal finishes, and other materials beyond normal weathering.
4. Electrical component defects and failures within the systems operation.

C. Standard Warranty Period: One year from date of Substantial Completion, unless otherwise indicated.

D. Special Warranty Periods:

1. Ten years for mortise locks and latches.
2. Five years for exit hardware.
3. Twenty five years for manual surface door closer bodies.
4. Five years for motorized electric latch retraction exit devices.
5. Two years for electromechanical door hardware.

NOT FOR BIDDING

1.7 MAINTENANCE SERVICE

A. Maintenance Tools and Instructions: Furnish a complete set of specialized tools and maintenance instructions as needed for Owner's continued adjustment, maintenance, and removal and replacement of door hardware.

PART 2 - PRODUCTS

2.1 SCHEDULED DOOR HARDWARE

A. General: Provide door hardware for each door to comply with requirements in Door Hardware Sets and each referenced section that products are to be supplied under.

B. Designations: Requirements for quantity, item, size, finish or color, grade, function, and other distinctive qualities of each type of door hardware are indicated in the Door Hardware Sets at the end of Part 3. Products are identified by using door hardware designations, as follows:

1. Named Manufacturer's Products: Product designation and manufacturer are listed for each door hardware type required for the purpose of establishing requirements. Manufacturers' names are abbreviated in the Door Hardware Schedule.

C. Substitutions: Requests for substitution and product approval for inclusive mechanical and electromechanical door hardware in compliance with the specifications must be submitted in writing and in accordance with the procedures and time frames outlined in Division 01, Substitution Procedures. Approval of requests is at the discretion of the architect, owner, and their designated consultants.

2.2 HANGING DEVICES

A. Hinges: ANSI/BHMA A156.1 certified butt hinges with number of hinge knuckles and other options as specified in the Door Hardware Sets.

1. Quantity: Provide the following hinge quantity:
   a. Two Hinges: For doors with heights up to 60 inches.
   b. Three Hinges: For doors with heights 61 to 90 inches.
   c. Four Hinges: For doors with heights 91 to 120 inches.
   d. For doors with heights more than 120 inches, provide 4 hinges, plus 1 hinge for every 30 inches of door height greater than 120 inches.
2. Hinge Size: Provide the following, unless otherwise indicated, with hinge widths sized for door thickness and clearances required:
   a. Widths up to 3’6”: 4-1/2” standard or heavy weight as specified.
   b. Sizes from 3’7” to 4’0”: 5” heavy weight.
3. Hinge Options: Comply with the following:
   a. Non-removable Pins: Provide set screw in hinge barrel that, when tightened into a groove in hinge pin, prevents removal of pin while door is closed; for the all out-swinging lockable doors.
4. Manufacturers:
   a. Hager Companies (HA) - CB Series.
   b. McKinney Products; ASSA ABLOY Architectural Door Accessories (MK) - TA Series.
   c. Stanley Hardware (ST) - CB Series.

NOT FOR BIDDING

2.3 POWER TRANSFER DEVICES

A. Electrified Quick Connect Transfer Hinges: Provide electrified transfer hinges with Molex™ standardized plug connectors and sufficient number of concealed wires (up to 12) to accommodate the electrified functions specified in the Door Hardware Sets. Connectors plug directly to through-door wiring harnesses for connection to electric locking devices and power supplies. Wire nut connections are not acceptable.
   1. Manufacturers:
      a. Hager Companies (HA) - ETW-QC (# wires) Option.
      b. McKinney Products; ASSA ABLOY Architectural Door Accessories (MK) - QC (# wires) Option.
      c. Stanley Hardware (ST) – C Option.

B. Concealed Quick Connect Electric Power Transfers: Provide concealed wiring pathway housing mortised into the door and frame for low voltage electrified door hardware. Furnish with Molex™ standardized plug connectors and sufficient number of concealed wires (up to 12) to accommodate the electrified functions specified in the Door Hardware Sets. Connectors plug directly to through-door wiring harnesses for connection to electric locking devices and power supplies. Wire nut connections are not acceptable.
   1. Manufacturers:
      a. Securitron (SU) - EL-CEPT Series.

C. Electric Door Wire Harnesses: Provide electric/data transfer wiring harnesses with standardized plug connectors to accommodate up to twelve (12) wires. Connectors plug directly to through-door wiring harnesses for connection to electric locking devices and power supplies. Provide sufficient number and type of concealed wires to accommodate electric function of specified hardware. Provide a connector for through-door electronic locking devices and from hinge to junction box above the opening. Wire nut connections are not acceptable. Determine the length required for each electrified hardware component for the door type, size and construction, minimum of two per electrified opening.
   1. Provide one each of the following tools as part of the base bid contract:
      a. McKinney Products; ASSA ABLOY Architectural Door Accessories (MK) - Electrical Connecting Kit: QC-R001.
      b. McKinney Products; ASSA ABLOY Architectural Door Accessories (MK) - Connector Hand Tool: QC-R003.
   2. Manufacturers:
      a. Hager Companies (HA) - Quick Connect.
      b. McKinney Products; ASSA ABLOY Architectural Door Accessories (MK) – QC-C Series.
      c. Stanley Hardware (ST) – WH Series.

2.4 DOOR OPERATING TRIM

A. Flush Bolts and Surface Bolts: ANSI/BHMA A156.3 and A156.16, Grade 1, certified.
   1. Flush bolts to be furnished with top rod of sufficient length to allow bolt retraction device location approximately six feet from the floor.
   2. Furnish dust proof strikes for bottom bolts.
   3. Surface bolts to be minimum 8” in length and U.L. listed for labeled fire doors and U.L. listed for windstorm components where applicable.
   4. Provide related accessories (mounting brackets, strikes, coordinators, etc.) as required for appropriate installation and operation.
   5. Manufacturers:

NOT FOR BIDDING

a. Door Controls International (DC).
b. Rockwood Products; ASSA ABLOY Architectural Door Accessories (RO).
c. Trimco (TC).

B. Coordinators: ANSI/BHMA A156.3 certified door coordinators consisting of active-leaf, hold-open lever and inactive-leaf release trigger. Model as indicated in hardware sets.
1. Manufacturers:
a. Door Controls International (DC).
b. Rockwood Products; ASSA ABLOY Architectural Door Accessories (RO).
c. Trimco (TC).

C. Door Push Plates and Pulls: ANSI/BHMA A156.6 certified door pushes and pulls of type and design specified in the Hardware Sets. Coordinate and provide proper width and height as required where conflicting hardware dictates.
1. Push/Pull Plates: Minimum .050 inch thick, size as indicated in hardware sets, with beveled edges, secured with exposed screws unless otherwise indicated.
2. Door Pull and Push Bar Design: Size, shape, and material as indicated in the hardware sets. Minimum clearance of 2 1/2-inches from face of door unless otherwise indicated.
3. Offset Pull Design: Size, shape, and material as indicated in the hardware sets. Minimum clearance of 2 1/2-inches from face of door and offset of 90 degrees unless otherwise indicated.
4. Fasteners: Provide manufacturer's designated fastener type as indicated in Hardware Sets.
5. Manufacturers:
a. Hiawatha, Inc. (HI).
b. Rockwood Products; ASSA ABLOY Architectural Door Accessories (RO).
c. Trimco (TC).

2.5 CYLINDERS AND KEYING

A. General: Cylinder manufacturer to have minimum (10) years experience designing secured master key systems and have on record a published security keying system policy.

B. Source Limitations: Obtain each type of keyed cylinder and keys from the same source manufacturer as locksets and exit devices, unless otherwise indicated.

C. Cylinders: Original manufacturer cylinders complying with the following:
1. Mortise Type: Threaded cylinders with rings and cams to suit hardware application.
2. Rim Type: Cylinders with back plate, flat-type vertical or horizontal tailpiece, and raised trim ring.
3. Lever-Lock Type: Cylinders with tailpieces to suit locks.
4. Mortise and rim cylinder collars to be solid and recessed to allow the cylinder face to be flush and be free spinning with matching finishes.
5. Keyway: Match Facility Standard.

D. Security Cylinders: ANSI/BHMA A156.5, Grade 1, patterned security cylinders and keys able to be used together under the same facility master or grandmaster key system. Cylinders are to be factory keyed.
1. Manufacturers:
a. Corbin Russwin (RU) - Pyramid PS Series.
b. No Substitution.

E. Keying System: Each type of lock and cylinders to be factory keyed.
1. Conduct specified "Keying Conference" to define and document keying system instructions and requirements.

NOT FOR BIDDING

2. Furnish factory cut, nickel-silver large bow permanently inscribed with a visual key control number as directed by Owner.
3. Existing System: Key locks to Owner's existing system.

F. Key Quantity: Provide the following minimum number of keys:
1. Change Keys per Cylinder: Two (2)
2. Master Keys (per Master Key Level/Group): Five (5).
3. Construction Keys (where required): Ten (10).
4. Construction Control Keys (where required): Two (2).
5. Permanent Control Keys (where required): Two (2).

G. Construction Keying: Provide temporary keyed construction cores.

H. Key Registration List (Bitting List):
1. Provide keying transcript list to Owner's representative in the proper format for importing into key control software.
2. Provide transcript list in writing or electronic file as directed by the Owner.

I. Key Control Cabinet: Provide a key control system including envelopes, labels, and tags with self-locking key clips, receipt forms, 3-way visible card index, temporary markers, permanent markers, and standard metal cabinet. Key control cabinet shall have expansion capacity of 150% of the number of locks required for the project.
1. Manufacturers:
a. Lund Equipment (LU).
b. MMF Industries (MM).
c. Telkee (TK).

2.6 MECHANICAL LOCKS AND LATCHING DEVICES

A. Mortise Locksets, Grade 1 (Heavy Duty): ANSI/BHMA A156.13, Series 1000, Operational Grade 1 certified. Locksets are to be manufactured with a corrosion resistant steel case and be field-reversible for handing without disassembly of the lock body.
1. Manufacturers:
a. Corbin Russwin Hardware (RU) – ML2000 Series.
b. No Substitution.

2.7 LOCK AND LATCH STRIKES

A. Strikes: Provide manufacturer's standard strike with strike box for each latch or lock bolt, with curved lip extended to protect frame, finished to match door hardware set, unless otherwise indicated, and as follows:
1. Flat-Lip Strikes: For locks with three-piece antifriction latchbolts, as recommended by manufacturer.
2. Extra-Long-Lip Strikes: For locks used on frames with applied wood casing trim.
3. Aluminum-Frame Strike Box: Provide manufacturer's special strike box fabricated for aluminum framing.

B. Standards: Comply with the following:
1. Strikes for Mortise Locks and Latches: BHMA A156.13.
2. Strikes for Bored Locks and Latches: BHMA A156.2.
3. Strikes for Auxiliary Deadlocks: BHMA A156.36.
4. Dustproof Strikes: BHMA A156.16.

NOT FOR BIDDING

2.8 CONVENTIONAL EXIT DEVICES

A. General Requirements: All exit devices specified herein shall meet or exceed the following criteria:

1. At doors not requiring a fire rating, provide devices complying with NFPA 101 and listed and labeled for "Panic Hardware" according to UL305. Provide proper fasteners as required by manufacturer including sex nuts and bolts at openings specified in the Hardware Sets.
2. Where exit devices are required on fire rated doors, provide devices complying with NFPA 80 and with UL labeling indicating "Fire Exit Hardware". Provide devices with the proper fasteners for installation as tested and listed by UL. Consult manufacturer's catalog and template book for specific requirements.
3. Except on fire rated doors, provide exit devices with hex key dogging device to hold the pushbar and latch in a retracted position. Provide optional keyed cylinder dogging on devices where specified in Hardware Sets.
4. Devices must fit flat against the door face with no gap that permits unauthorized dogging of the push bar. The addition of filler strips is required in any case where the door light extends behind the device as in a full glass configuration.
5. Energy Efficient Design: Provide lock bodies which have a holding current draw of 15mA maximum, and can operate on either 12 or 24 volts. Locks are to be field configurable for fail safe or fail secure operation.
6. Electromechanical Options: Subject to same compliance standards and requirements as mechanical exit devices, electrified devices to be of type and design as specified in hardware sets. Include any specific controllers when conventional power supplies are not sufficient to provide the proper inrush current.
7. Lever Operating Trim: Where exit devices require lever trim, furnish manufacturer's heavy duty escutcheon trim with threaded studs for thru-bolts.
   a. Lock Trim Design: As indicated in Hardware Sets, provide finishes and designs to match that of the specified locksets.
   b. Where function of exit device requires a cylinder, provide a cylinder (Rim or Mortise) as specified in Hardware Sets.
8. Vertical Rod Exit Devices: Where surface or concealed vertical rod exit devices are used at interior openings, provide as less bottom rod (LBR) unless otherwise indicated. Provide dust proof strikes where thermal pins are required to project into the floor.
9. Narrow Stile Applications: At doors constructed with narrow stiles, or as specified in Hardware Sets, provide devices designed for maximum 2” wide stiles.
10. Dummy Push Bar: Nonfunctioning push bar matching functional push bar.
11. Rail Sizing: Provide exit device rails factory sized for proper door width application.
12. Through Bolt Installation: For exit devices and trim as indicated in Door Hardware Sets.

B. Conventional Push Rail Exit Devices (Heavy Duty): ANSI/BHMA A156.3, Grade 1 certified panic and fire exit hardware devices furnished in the functions specified in the Hardware Sets. Exit device latch to be stainless steel, pullman type, with deadlock feature.

1. Manufacturers:
   a. Corbin Russwin Hardware (RU) - ED4000 / ED5000 Series.

C. Tube Steel Removable Mullions: ANSI/BHMA A156.3 removable steel mullions with malleable-iron top and bottom retainers and a primed paint finish.

1. Provide keyed removable feature where specified in the Hardware Sets.
2. Provide stabilizers and mounting brackets as required.
3. Provide electrical quick connection wiring options as specified in the hardware sets.
4. Manufacturers:

NOT FOR BIDDING

a. Corbin Russwin Hardware (RU) - 700/900 Series.

2.9 DOOR CLOSERS

A. All door closers specified herein shall meet or exceed the following criteria:
1. General: Door closers to be from one manufacturer, matching in design and style, with the same type door preparations and templates regardless of application or spring size. Closers to be non-handed with full sized covers including installation and adjusting information on inside of cover.
2. Standards: Closers to comply with UL-10C for Positive Pressure Fire Test and be U.L. listed for use of fire rated doors.
3. Cycle Testing: Provide closers which have surpassed 15 million cycles in a test witnessed and verified by UL.
4. Size of Units: Comply with manufacturer's written recommendations for sizing of door closers depending on size of door, exposure to weather, and anticipated frequency of use. Where closers are indicated for doors required to be accessible to the physically handicapped, provide units complying with ANSI/ICC/A117.1.
5. Closer Arms: Provide heavy duty, forged steel closer arms unless otherwise indicated in Hardware Sets.
6. Closers shall not be installed on exterior or corridor side of doors; where possible install closers on door for optimum aesthetics.
7. Closer Accessories: Provide door closer accessories including custom templates, special mounting brackets, spacers and drop plates as required for proper installation. Provide through-bolt and security type fasteners as specified in the hardware sets.

B. Door Closers, Surface Mounted (Heavy Duty): ANSI/BHMA A156.4, Grade 1 surface mounted, heavy duty door closers with complete spring power adjustment, sizes 1 thru 6; and fully operational adjustable according to door size, frequency of use, and opening force. Closers to be rack and pinion type, one piece cast iron or aluminum alloy body construction, with adjustable backcheck and separate non-critical valves for closing sweep and latch speed control. Provide non-handed units standard.
1. Manufacturer:
a. Norton Door Controls (NO) - 7500 Series.

2.10 DOOR STOPS AND HOLDERS

A. General: Door stops and holders to be of type and design as specified below or in the Hardware Sets.

B. Door Stops and Bumpers: ANSI/BHMA A156.16, Grade 1 certified door stops and wall bumpers. Provide wall bumpers, either convex or concave types with anchorage as indicated, unless other types of door stops are specified in Hardware Sets. Floor stops are not permitted. Where wall bumpers are not appropriate, provide overhead type stops and holders.
1. Manufacturers:
a. Hiawatha, Inc. (HI).
b. Rockwood Products; ASSA ABLOY Architectural Door Accessories (RO).
c. Trimco (TC).

C. Overhead Door Stops and Holders: ANSI/BHMA A156.6, Grade 1 certified overhead stops and holders to be surface or concealed types as indicated in Hardware Sets. Track, slide, arm and jamb bracket to be constructed of extruded bronze and shock absorber spring of heavy tempered steel. Provide non-handed design with mounting brackets as required for proper operation and function.

NOT FOR BIDDING

1. Manufacturers:
   a. Rixson Door Controls (RF).
   b. Rockwood Products; ASSA ABLOY Architectural Door Accessories (RO).
   c. Sargent Manufacturing (SA).

2.11 ARCHITECTURAL SEALS

A. General: Thresholds, weatherstripping, and gasket seals to be of type and design as specified below or in the Hardware Sets. Provide continuous weatherstrip gasketing on exterior doors and provide smoke, light, or sound gasketing on interior doors where indicated. At exterior applications provide non-corrosive fasteners and elsewhere where indicated.

B. Smoke Labeled Gasketing: Assemblies complying with NFPA 105 that are listed and labeled by a testing and inspecting agency acceptable to authorities having jurisdiction, for smoke control ratings indicated, based on testing according to UL 1784.
   1. Provide smoke labeled perimeter gasketing at all smoke labeled openings.

C. Fire Labeled Gasketing: Assemblies complying with NFPA 80 that are listed and labeled by a testing and inspecting agency acceptable to authorities having jurisdiction, for fire ratings indicated, based on testing according to UL-10C.
   1. Provide intumescent seals as indicated to meet UL10C Standard for Positive Pressure Fire Tests of Door Assemblies, and NFPA 252, Standard Methods of Fire Tests of Door Assemblies.

D. Sound-Rated Gasketing: Assemblies that are listed and labeled by a testing and inspecting agency, for sound ratings indicated.

E. Replaceable Seal Strips: Provide only those units where resilient or flexible seal strips are easily replaceable and readily available from stock maintained by manufacturer.

F. Manufacturers:
   1. National Guard Products (NG).
   2. Pemko Products; ASSA ABLOY Architectural Door Accessories (PE).
   3. Reese Enterprises, Inc. (RE).

2.12 ELECTRONIC ACCESSORIES

A. Wiegand Test Unit: Test unit verifies proper Wiegand output integrated card reader lock installation in the field by testing for proper wiring, card reader data integrity, and lock functionality including lock/unlock, door position, and request-to-exit status. 12 or 24VDC voltage adjustable operating as Fail Safe or Fail Secure.
   1. Manufacturers:
      a. Corbin Russwin Hardware (RU) – WT2 Wiegand Test Unit.

2.13 FABRICATION

A. Fasteners: Provide door hardware manufactured to comply with published templates generally prepared for machine, wood, and sheet metal screws. Provide screws according to manufacturers recognized installation standards for application intended.

2.14 FINISHES

A. Standard: Designations used in the Hardware Sets and elsewhere indicate hardware finishes complying with ANSI/BHMA A156.18, including coordination with traditional U.S. finishes indicated by certain manufacturers for their products.

NOT FOR BIDDING

B. Provide quality of finish, including thickness of plating or coating (if any), composition, hardness, and other qualities complying with manufacturer's standards, but in no case less than specified by referenced standards for the applicable units of hardware
C. Protect mechanical finishes on exposed surfaces from damage by applying a strippable, temporary protective covering before shipping.

PART 3 - EXECUTION

3.1 EXAMINATION
A. Examine scheduled openings, with Installer present, for compliance with requirements for installation tolerances, labeled fire door assembly construction, wall and floor construction, and other conditions affecting performance.
B. Notify architect of any discrepancies or conflicts between the door schedule, door types, drawings and scheduled hardware. Proceed only after such discrepancies or conflicts have been resolved in writing.

3.2 PREPARATION
A. Hollow Metal Doors and Frames: Comply with ANSI/DHI A115 series.
B. Wood Doors: Comply with ANSI/DHI A115-W series.

3.3 INSTALLATION
A. Install each item of mechanical and electromechanical hardware and access control equipment to comply with manufacturer's written instructions and according to specifications.
1. Installers are to be trained and certified by the manufacturer on the proper installation and adjustment of fire, life safety, and security products including: hanging devices; locking devices; closing devices; and seals.
B. Mounting Heights: Mount door hardware units at heights indicated in following applicable publications, unless specifically indicated or required to comply with governing regulations:
1. Standard Steel Doors and Frames: DHI's "Recommended Locations for Architectural Hardware for Standard Steel Doors and Frames."
2. Wood Doors: DHI WDHS.3, "Recommended Locations for Architectural Hardware for Wood Flush Doors."
3. Where indicated to comply with accessibility requirements, comply with ANSI A117.1 "Accessibility Guidelines for Buildings and Facilities."
4. Provide blocking in drywall partitions where wall stops or other wall mounted hardware is located.
C. Retrofitting: Install door hardware to comply with manufacturer's published templates and written instructions. Where cutting and fitting are required to install door hardware onto or into surfaces that are later to be painted or finished in another way, coordinate removal, storage, and reinstallation of surface protective trim units with finishing work specified in Division 9 Sections. Do not install surface-mounted items until finishes have been completed on substrates involved.
D. Thresholds: Set thresholds for exterior and acoustical doors in full bed of sealant complying with requirements specified in Division 7 Section "Joint Sealants."

NOT FOR BIDDING

E. Storage: Provide a secure lock up for hardware delivered to the project but not yet installed. Control the handling and installation of hardware items so that the completion of the work will not be delayed by hardware losses before and after installation.

3.4 FIELD QUALITY CONTROL

A. Field Inspection: Supplier will perform a final inspection of installed door hardware and state in report whether work complies with or deviates from requirements, including whether door hardware is properly installed, operating and adjusted.

3.5 ADJUSTING

A. Initial Adjustment: Adjust and check each operating item of door hardware and each door to ensure proper operation or function of every unit. Replace units that cannot be adjusted to operate as intended. Adjust door control devices to compensate for final operation of heating and ventilating equipment and to comply with referenced accessibility requirements.

3.6 CLEANING AND PROTECTION

A. Protect all hardware stored on construction site in a covered and dry place. Protect exposed hardware installed on doors during the construction phase. Install any and all hardware at the latest possible time frame.

B. Clean adjacent surfaces soiled by door hardware installation.

C. Clean operating items as necessary to restore proper finish. Provide final protection and maintain conditions that ensure door hardware is without damage or deterioration at time of owner occupancy.

3.7 DEMONSTRATION

A. Instruct Owner's maintenance personnel to adjust, operate, and maintain mechanical and electromechanical door hardware.

3.8 DOOR HARDWARE SETS

A. The hardware sets represent the design intent and direction of the owner and architect. They are a guideline only and should not be considered a detailed hardware schedule. Discrepancies, conflicting hardware and missing items should be brought to the attention of the architect with corrections made prior to the bidding process. Omitted items not included in a hardware set should be scheduled with the appropriate additional hardware required for proper application and functionality.

B. The supplier is responsible for handing and sizing all products and providing the correct option for the appropriate door type and material where more than one is presented in the hardware sets. Quantities listed are for each pair of doors, or for each single door.

C. Manufacturer's Abbreviations:

1. MK - McKinney
2. PE - Pemko
3. RI - RITE Door
4. RO - Rockwood
5. RU - Corbin Russwin

NOT FOR BIDDING

6. RF - Rixson
7. NO - Norton
8. SU - Securitron
9. OT - OTHER

## Hardware Sets

### Set: 0.0

Doors: 100J.B, 200, 201C, 201D

| | | | | |
|---|---|---|---|---|
| 0 | All Hardware | BY DOOR SUPPLIER | | 00 |

### Set: 1.0

| | | | | |
|---|---|---|---|---|
| 6 | Padlock | PL5040 2-3/8 CT6R | | RU |
| 1 | Cylinder Core | CR8027 CKC2 | 630 | RU |

Notes: Padlocks are to be turned over to the owner.

### Set: 1.1

Doors: 147C, 147D, E100C.A, E167D

| | | | | |
|---|---|---|---|---|
| 1 | Cylinder (type to suit) | 1080 (or) 3080 CT6R | 630 | RU |
| 1 | Cylinder Core | CR8027 CKC2 | 630 | RU |

Notes:
Balance of hardware by door supplier.

### Set: 2.0

Doors: 101B.A, 101B.B, 101B.C, 101B.D, 201B.A, 201B.B, 201B.C, 201B.D

| | | | | |
|---|---|---|---|---|
| | Continuous Hinge | D329 - DOOR HEIGHT | 630 | RI |
| 2 | Recessed Exit | D3676 | US32D | RI |
| 1 | Exit Device Trim | D3080-02 Cyl | US32D | RI |
| 1 | Cylinder (type to suit) | 1080 (or) 3080 CT6R | 630 | RU |
| 1 | Cylinder Core | CR8027 CKC2 | 630 | RU |
| 2 | Surface Closer | D-DCT-351PKT90 | EN | RI |
| 2 | Kick Plate | D-KP 10" high SA | US32D | RI |
| 2 | Electromagnetic Holder | D-MDH-310 900-XXX | 689 | RI |

NOT FOR BIDDING

| | | | | |
|---|---|---|---|---|
| 1 | Seal Kit | D-SS44-STK-DBZ | Dark Bronze | RI |
| 1 | Seal Kit | D-SS-STK-DBZ | Dark Bronze | RI |

Notes: All hardware in this set, except cylinders and cores, is furnished by the door supplier under Section 081700 – Integrated Opening Assemblies.
Connect holder to fire alarm system to release upon fire alarm/lockdown event.

**Set: 2.1**

Doors: 199A, 199B, 199C, 299B, 299C

| | | | | |
|---|---|---|---|---|
| 2 | Continuous Hinge | D329 - DOOR HEIGHT | 630 | RI |
| 2 | Recessed Exit | D-676 | US32D | RI |
| 2 | Trim | D308__02 PASSAGE FUNCTION* | US32D | RI |
| 2 | Surface Closer | D-DCT-351PKT90 | EN | RI |
| 2 | Kick Plate | D-KP 10" high SA | US32D | RI |
| 2 | Electromagnetic Holder | D-MDH-310 900-XXX | 689 | RI |
| 1 | Seal Kit | D-SS44-STK-DBZ | Dark Bronze | RI |
| 1 | Seal Kit | D-SS-STK-DBZ | Dark Bronze | RI |

Notes: All hardware in this set is furnished by the door supplier under Section 081700 – Integrated Opening Assemblies.
Connect holder to fire alarm system to release upon fire alarm/lockdown event.

**Set: 3.0**

Doors: E100A.A, E100N.A

| | | | | |
|---|---|---|---|---|
| 2 | Continuous Hinge | CFM__SLF-HD1 PT - DOOR HEIGHT | | PE |
| 1 | Removable Mullion | 907BKM - DOOR HEIGHT | | RU |
| 2 | Exit Device (rim, exit only) | ED5200 EO M92 | 630 | RU |
| 1 | Cylinder (type to suit) | 1080 (or) 3080 CT6R | 630 | RU |
| 1 | Cylinder Core | CR8027 CKC2 | 630 | RU |
| 2 | Door Pull | BF158 Mtg-Type 12XHD | US32D | RO |
| 2 | Surf Overhead Stop | 8-336 | 630 | RF |

NOT FOR BIDDING

| | | | | |
|---|---|---|---|---|
| 2 | Surface Closer | J7500 | 689 | NO |
| 1 | Threshold | 272A MSES25SS | | PE |
| 1 | Rain Guard | 346C | | PE |
| 1 | Gasketing | 5110BL | | PE |
| 2 | Sweep | 3452CNB | | PE |
| 2 | Frame Harness | QC-C1500P | | MK |
| 2 | Door Harness | QC-C___ - LENGTH TO SUIT | | MK |
| 2 | Electric Power Transfer | EL-CEPT | | SU |
| 2 | Door Contact Switch | BY SECURITY - PREP DOOR/FRAME | | OT |

Notes: Perimeter/meeting stile seals by frame/door supplier.

**Set: 3.1**

Doors: E100L.A

| | | | | |
|---|---|---|---|---|
| 2 | Continuous Hinge | CFM__SLF-HD1 PT - DOOR HEIGHT | | PE |
| 1 | Removable Mullion | 907BKM - DOOR HEIGHT | | RU |
| 2 | Exit Device (rim, exit only) | ED5200 EO M92 | 630 | RU |
| 1 | Cylinder (type to suit) | 1080 (or) 3080 CT6R | 630 | RU |
| 1 | Cylinder Core | CR8027 CKC2 | 630 | RU |
| 2 | Door Pull | BF158 Mtg-Type 12XHD | US32D | RO |
| 2 | Surf Overhead Hold Open | 8-X26 | 630 | RF |
| 2 | Surface Closer | J7500 | 689 | NO |
| 1 | Threshold | 272A MSES25SS | | PE |
| 1 | Rain Guard | 346C | | PE |
| 1 | Gasketing | 5110BL | | PE |
| 2 | Sweep | 3452CNB | | PE |
| 2 | Frame Harness | QC-C1500P | | MK |
| 2 | Door Harness | QC-C___ - LENGTH TO SUIT | | MK |
| 2 | Electric Power Transfer | EL-CEPT | | SU |
| 2 | Door Contact Switch | BY SECURITY - PREP DOOR/FRAME | | OT |

Notes: Perimeter/meeting stile seals by frame/door supplier.

NOT FOR BIDDING

**Set: 4.0**

Doors: E100A.B, E100N.B

| | | | | |
|---|---|---|---|---|
| 2 | Continuous Hinge | CFM__SLF-HD1 PT - DOOR HEIGHT | | PE |
| 1 | Removable Mullion | 907BKM - DOOR HEIGHT | | RU |
| 1 | Exit Device (rim, exit only) | ED5200 EO M92 | 630 | RU |
| 1 | Access Control Exit Device (SELP10) | ED5200N K157 MELR SELP10 IPS 24AD | 630 | RU |
| 2 | Cylinder (type to suit) | 1080 (or) 3080 CT6R | 630 | RU |
| 2 | Cylinder Core | CR8027 CKC2 | 630 | RU |
| 2 | Door Pull | BF158 Mtg-Type 12XHD | US32D | RO |
| 2 | Surf Overhead Stop | 8-536 | 630 | RF |
| 2 | Surface Closer | 7500 | 689 | NO |
| 1 | Threshold | 272A MSES25SS | | PE |
| 1 | Rain Guard | 346C | | PE |
| 1 | Gasketing | 5110BL | | PE |
| 2 | Sweep | 3452CNB | | PE |
| 2 | Frame Harness | QC-C1500P | | MK |
| 3 | Door Harness | QC-C___ - LENGTH TO SUIT | | MK |
| 2 | Electric Power Transfer | EL-CEPT | | SU |
| 2 | Door Contact Switch | BY SECURITY - PREP DOOR/FRAME | | OT |
| 1 | Lock Power | BY SECURITY | | |

Notes: Perimeter/meeting stile seals by frame/door supplier.
Electronic Operation: Valid card or key retracts latchbolt. Free egress at all times. In case of power loss, door remains locked and latched.

**Set: 4.1**

Doors: E100L.B

| | | | | |
|---|---|---|---|---|
| 2 | Continuous Hinge | CFM__SLF-HD1 PT - DOOR HEIGHT | | PE |
| 1 | Removable Mullion | 907BKM - DOOR HEIGHT | | RU |
| 1 | Exit Device (rim, exit only) | ED5200 EO M92 | 630 | RU |
| 1 | Access Control Exit Device (SELP10) | ED5200N K157 MELR SELP10 IPS 24AD | 630 | RU |

NOT FOR BIDDING

| | | | | |
|---|---|---|---|---|
| 2 | Cylinder (type to suit) | 1080 (or) 3080 CT6R | 630 | RU |
| 2 | Cylinder Core | CR8027 CKC2 | 630 | RU |
| 2 | Door Pull | BF158 Mtg-Type 12XHD | US32D | RO |
| 2 | Surf Overhead Hold Open | 8-X26 | 630 | RF |
| 2 | Surface Closer | J7500 | 689 | NO |
| 1 | Threshold | 272A MSES25SS | | PE |
| 1 | Rain Guard | 346C | | PE |
| 1 | Gasketing | 5110BL | | PE |
| 2 | Sweep | 3452CNB | | PE |
| 2 | Frame Harness | QC-C1500 | | MK |
| 3 | Door Harness | QC-C___ LENGTH TO SUIT | | MK |
| 2 | Electric Power Transfer | EL-CEPT | | SU |
| 2 | Door Contact Switch | BY SECURITY - PREP DOOR/FRAME | | OT |
| 1 | Lock Power | BY SECURITY | | |

Notes: Perimeter/meeting stile seals by frame/door supplier.
Electronic Operation: Valid card or key retracts latchbolt. Free egress at all times. In case of power loss, door remains locked and latched.

**Set: 5.0**

Doors: E100P, E100Q.B, E128, E148.B

| | | | | |
|---|---|---|---|---|
| 2 | Continuous Hinge | CFM__SLF-HD1 PT - DOOR HEIGHT | | PE |
| 1 | Removable Mullion | 907BKM - DOOR HEIGHT | | RU |
| 1 | Exit Device (rim, exit only) | ED5200 EO M92 | 630 | RU |
| 1 | Access Control Exit Device (SELP10) | ED5200N K157 MELR SELP10 IPS 24AD | 630 | RU |
| 2 | Cylinder (type to suit) | 1080 (or) 3080 CT6R | 630 | RU |
| 1 | Cylinder Core | CR8027 CKC2 | 630 | RU |
| 2 | Door Pull | BF158 Mtg-Type 12XHD | US32D | RO |
| 2 | Surface Closer | CPS7500 | 689 | NO |
| 1 | Threshold | 272A MSES25SS | | PE |
| 1 | Rain Guard | 346C | | PE |
| 1 | Gasketing | 5110BL | | PE |
| 2 | Sweep | 3452CNB | | PE |

NOT FOR BIDDING

| | | | | |
|---|---|---|---|---|
| 2 | Astragal | 297AS | | PE |
| 2 | Frame Harness | QC-C1500P | | MK |
| 3 | Door Harness | QC-C___ - LENGTH TO SUIT | | MK |
| 2 | Electric Power Transfer | EL-CEPT | | SU |
| 2 | Door Contact Switch | BY SECURITY - PREP DOOR/FRAME | | OT |
| 1 | Lock Power | BY SECURITY | | |

Notes: Perimeter seals by frame supplier.
Electronic Operation: Valid card or key retracts latchbolt. Free egress at all times. In case of power loss, door remains locked and latched.

**Set: 6.0**

Doors: E100J.A, E158

| | | | | |
|---|---|---|---|---|
| 1 | Continuous Hinge | CFM__SLF-HD1 PT - FLOOR HEIGHT | | PE |
| 1 | Access Control Exit Device (SELP10) | ED5200N K157 MELR SELP10 IPS 24AD | 630 | RU |
| 1 | Cylinder (type to suit) | 1080 (or) 3080 CT6R | 630 | RU |
| 1 | Cylinder Core | CR8027 CKC2 | 630 | RU |
| 1 | Door Pull | BF158 Mtg-Type 12XHD | US32D | RO |
| 1 | Surface Closer | CPS7500 | 689 | NO |
| 1 | Threshold | 279x224AFGT MSES25SS | | PE |
| 1 | Rain Guard | 346C | | PE |
| 1 | Sweep | 3452CNB | | PE |
| 1 | Frame Harness | QC-C1500P | | MK |
| 1 | Door Harness | QC-C___ - LENGTH TO SUIT | | MK |
| 1 | Electric Power Transfer | EL-CEPT | | SU |
| 1 | Door Contact Switch | BY SECURITY - PREP DOOR/FRAME | | OT |
| 1 | Lock Power | BY SECURITY | | |

Notes: Perimeter seals by frame supplier.
Electronic Operation: Valid card or key retracts latchbolt. Free egress at all times. In case of power loss, door remains locked and latched.

**Set: 7.0**

NOT FOR BIDDING

Doors: E146.A, E146.B

| | | | | |
|---|---|---|---|---|
| 1 | Continuous Hinge | CFM__SLF-HD1 - DOOR HEIGHT | | PE |
| 1 | Rim Exit Device, Exit Only | ED5200 EO M52 | 630 | RU |
| 1 | Cylinder (type to suit) | 1080 (or) 3080 CT6R | 630 | RU |
| 1 | Cylinder Core | CR8027 CKC2 | 630 | RU |
| 1 | Door Pull | BF158 Mtg-Type 12XHD | US32D | RO |
| 1 | Surf Overhead Stop | 8-336 | 630 | RF |
| 1 | Surface Closer | J7500 | 689 | NO |
| 1 | Threshold | 279x224AFGT MSES25SS | | PE |
| 1 | Rain Guard | 346C | | PE |
| 1 | Sweep | 3452CNB | | PE |
| 1 | Door Contact Switch | BY SECURITY - PREP DOOR/FRAME | | OT |

Notes: Perimeter/meeting stile seals by frame/door supplier.

**Set: 8.0**

| | | | | |
|---|---|---|---|---|
| 2 | Continuous Hinge | CFM__SLF-HD1 - DOOR HEIGHT | | PE |
| 1 | Removable Mullion | 907BKM - DOOR HEIGHT | | RU |
| 2 | Exit Device (rim, exit only) | ED5200 EO | 630 | RU |
| 1 | Cylinder (type to suit) | 1080 (or) 3080 CT6R | 630 | RU |
| 1 | Cylinder Core | CR8027 CKC2 | 630 | RU |
| 2 | Surf Overhead Stop | 8-336 | 630 | RF |
| 2 | Surface Closer | J7500 | 689 | NO |
| 1 | Threshold | 272A MSES25SS | | PE |
| 1 | Rain Guard | 346C | | PE |
| 1 | Gasketing | 5110BL | | PE |
| 2 | Sweep | 3452CNB | | PE |
| 2 | Door Contact Switch | BY SECURITY - PREP DOOR/FRAME | | OT |

Notes: Perimeter/meeting stile seals by frame/door supplier.

**Set: 9.0**

NOT FOR BIDDING

Doors: E148.A, E199B, E199C

| | | | | |
|---|---|---|---|---|
| 2 | Continuous Hinge | CFM__SLF-HD1 - DOOR HEIGHT | | PE |
| 1 | Removable Mullion | 907BKM - DOOR HEIGHT | | RU |
| 2 | Exit Device (rim, exit only) | ED5200 EO | 630 | RU |
| 1 | Cylinder (type to suit) | 1080 (or) 3080 CT6R | 630 | RU |
| 1 | Cylinder Core | CR8027 CKC2 | 630 | RU |
| 2 | Surface Closer | CPS7500 | 689 | NO |
| 1 | Threshold | 272A MSES25SS | | PE |
| 1 | Rain Guard | 346C | | PE |
| 1 | Gasketing | 5110SL | | PE |
| 2 | Sweep | 3452CNB | | PE |
| 2 | Astragal | 297ASS | | PE |
| 2 | Door Contact Switch | BY SECURITY - PREP DOOR/FRAME | | OT |

Notes: Perimeter seals by frame supplier.

**Set: 10.0**

Doors: E159, E162

| | | | | |
|---|---|---|---|---|
| 1 | Continuous Hinge | CFM__SLF-HD1 - DOOR HEIGHT | | PE |
| 1 | Exit Device (rim, exit only) | ED5200 EO | 630 | RU |
| 1 | Surface Closer | CPS7500 | 689 | NO |
| 1 | Threshold | 279x224AFGT MSES25SS | | PE |
| 1 | Rain Guard | 346C | | PE |
| 1 | Sweep | 3452CNB | | PE |
| 1 | Door Contact Switch | BY SECURITY - PREP DOOR/FRAME | | OT |

Notes: Perimeter seals by frame supplier.

**Set: 11.0**

Doors: E129A, E147B

| | | | | |
|---|---|---|---|---|
| 1 | Continuous Hinge | CFM__SLF-HD1 - DOOR HEIGHT | | PE |

NOT FOR BIDDING

| | | | | |
|---|---|---|---|---|
| 1 | Continuous Hinge | CFM__SLF-HD1 PT - DOOR HEIGHT | | PE |
| 1 | Dust Proof Strike | 570 | US26D | RO |
| 2 | Flush Bolt (manual) | 555 (or) 557 | US26D | RO |
| 1 | Card Reader Lock | ML20606 x SELP10-SEC 128X CT6R | 626 | RU |
| 1 | Cylinder Core | CR8027 CKC2 | 630 | RU |
| 2 | Surface Closer | CPS7500 | 689 | NO |
| 1 | Threshold | 279x224AFGT MSES25SS | | PE |
| 1 | Rain Guard | 346C | | PE |
| 2 | Sweep | 3452CNB | | PE |
| 1 | Astragal | S771C | | PE |
| 1 | Astragal | 357SP | | PE |
| 1 | Frame Harness | QC-C1500P | | MK |
| 1 | Door Harness | QC-C___ - LENGTH TO SUIT | | MK |
| 1 | Electric Power Transfer | EL-CEPT | | SU |
| 2 | Door Contact Switch | BY SECURITY - PREP DOOR/FRAME | | OT |
| 1 | Lock Power | BY SECURITY | | |

Notes: Perimeter/meeting stile seals by frame/door supplier.
Electronic Operation: Valid card unlocks outside lever or key retracts latchbolt. Free egress at all times. In case of power loss, door remains locked and latched.

**Set: 12.0**

Doors: E147A

| | | | | |
|---|---|---|---|---|
| 1 | Continuous Hinge | CFM__SLF-HD1 PT - DOOR HEIGHT | | PE |
| 1 | Card Reader Lock | ML20606 x SELP10-SEC 128X CT6R | 626 | RU |
| | Cylinder Core | CR8027 CKC2 | 630 | RU |
| 1 | Surface Closer | CPS7500T | 689 | NO |
| 1 | Threshold | 272A MSES25SS | | PE |
| 1 | Rain Guard | 346C | | PE |
| 1 | Sweep | 3452CNB | | PE |
| 1 | Frame Harness | QC-C1500P | | MK |
| 1 | Door Harness | QC-C___ - LENGTH TO SUIT | | MK |
| 1 | Electric Power Transfer | EL-CEPT | | SU |

NOT FOR BIDDING

| | | | | |
|---|---|---|---|---|
| 1 | Door Contact Switch | BY SECURITY - PREP DOOR/FRAME | | OT |
| 1 | Lock Power | BY SECURITY | | |

Notes: Perimeter/meeting stile seals by frame/door supplier.
Electronic Operation: Valid card unlocks outside lever or key retracts latchbolt. Free egress at all times. In case of power loss, door remains locked and latched.

**Set: 13.0**

Doors: E168.B

| | | | | |
|---|---|---|---|---|
| 2 | Continuous Hinge | CFM__HD1 - DOOR HEIGHT | | PE |
| 1 | Dust Proof Strike | 570 | US26D | RO |
| 2 | Flush Bolt (manual) | 555 (or) 557 | US26D | RO |
| 1 | Storeroom Lock | ML2057 128X CT6R | 626 | RU |
| 1 | Cylinder Core | CR8027 CKC2 | 630 | RU |
| 2 | Surface Closer | CPS7500 | 689 | NO |
| 1 | Threshold | 279x224AFGT MSES25SS | | PE |
| 1 | Rain Guard | 346C | | PE |
| 2 | Sweep | 3452CNB | | PE |
| 1 | Astragal | S771C | | PE |
| 1 | Astragal | 357SP | | PE |
| 2 | Door Contact Switch | BY SECURITY - PREP DOOR/FRAME | | OT |

Notes: Perimeter seals by frame supplier.

**Set: 14.0**

Doors: E168.A

| | | | | |
|---|---|---|---|---|
| | Continuous Hinge | CFM__HD1 - DOOR HEIGHT | | PE |
| 1 | Storeroom Lock | ML2057 128X CT6R | 626 | RU |
| 1 | Cylinder Core | CR8027 CKC2 | 630 | RU |
| 1 | Surface Closer | CPS7500 | 689 | NO |
| 1 | Threshold | 279x224AFGT MSES25SS | | PE |
| 1 | Rain Guard | 346C | | PE |
| 1 | Sweep | 3452CNB | | PE |

NOT FOR BIDDING

| | | | | |
|---|---|---|---|---|
| 1 | Door Contact Switch | BY SECURITY - PREP DOOR/FRAME | | OT |

Notes: Perimeter seals by frame supplier.

**Set: 15.0**

Doors: 102A

| | | | | |
|---|---|---|---|---|
| 1 | Continuous Hinge | CFM__SLF-HD1 PT - DOOR HEIGHT | | PE |
| 1 | Card Reader Lock | ML20606 x SELF 0-SEC 128[illegible] CT6R | 626 | RU |
| 1 | Cylinder Core | CR8027 CKC2 | 630 | RU |
| 1 | Surf Overhead Stop | 8-336 | 630 | RF |
| 1 | Surface Closer | J7500 | 689 | NO |
| 1 | Frame Harness | QC-CT[illegible]0P | | MK |
| 1 | Door Harness | QC-[illegible]___ - LENGTH TO SUIT | | MK |
| 1 | Electric Power Transfer | EL-CEPT | | SU |
| 1 | Door Contact Switch | BY SECURITY - PREP DOOR/FRAME | | OT |
| 1 | Lock Power | BY SECURITY | | |

Notes: Card reader and remote release deviceby security integrator.
Electronic Operation: Valid card or signal from remote release device unlocks outside lever or key retracts latchbolt. Free egress at all times. In case of power loss, door remains locked and latched.

**Set: 16.0**

Doors: 100B.A

| | | | | |
|---|---|---|---|---|
| 2 | Continuous Hinge | CFM__SLF-HD1 PT - DOOR HEIGHT | | PE |
| 1 | Removable Mullion | 907BKM - DOOR HEIGHT | | RU |
| 2 | Exit Device (rim, exit only) | ED5200 EO M92 | 630 | RU |
| 1 | Cylinder (type to suit) | 1080 (or) 3080 CT6R | 630 | RU |
| 1 | Cylinder Core | CR8027 CKC2 | 630 | RU |
| 2 | Door Pull | BF158 Mtg-Type 12XHD | US32D | RO |
| 2 | Surf Overhead Stop | 8-336 | 630 | RF |
| 2 | Surface Closer | J7500 | 689 | NO |

NOT FOR BIDDING

| | | | | |
|---|---|---|---|---|
| 1 | Gasketing | 5110BL | | PE |
| 2 | Frame Harness | QC-C1500P | | MK |
| 2 | Door Harness | QC-C___ - LENGTH TO SUIT | | MK |
| 2 | Electric Power Transfer | EL-CEPT | | SU |
| 2 | Door Contact Switch | BY SECURITY - PREP DOOR/FRAME | | OT |

Notes: Perimeter/meeting stile seals by frame/door supplier.

**Set: 17.0**

Doors: 100B.B

| | | | | |
|---|---|---|---|---|
| 2 | Continuous Hinge | CFM__SLF HD1 PT - DOOR HEIGHT | | PE |
| 1 | Removable Mullion | 907BK - DOOR HEIGHT | | RU |
| 1 | Exit Device (rim, exit only) | ED5200 EO M92 | 630 | RU |
| 1 | Access Control Exit Device (SELP10) | ED5200N K157 MELR SELP10 IPS 24AD | 630 | RU |
| 2 | Cylinder (type to suit) | 1080 (or) 3080 CT6R | 630 | RU |
| 2 | Door Pull | BF158 Mtg-Type 12XHD | US32D | RO |
| 2 | Surf Overhead Stop | 8-336 | 630 | RF |
| 2 | Surface Closer | J7500 | 689 | NO |
| 1 | Gasketing | 5110BL | | PE |
| 2 | Frame Harness | QC-C1500P | | MK |
| 3 | Door Harness | QC-C___ - LENGTH TO SUIT | | MK |
| 2 | Electric Power Transfer | EL-CEPT | | SU |
| 2 | Door Contact Switch | BY SECURITY - PREP DOOR/FRAME | | OT |
| 1 | Lock Power | BY SECURITY | | |

Notes: Perimeter/meeting stile seals by frame/door supplier.
Electronic Operation: Valid card, remote release signal or key retracts latchbolt. Free egress at all times. In case of power loss, door remains locked and latched.

**Set: 18.0**

Doors: 100N.A, 100N.B

| | | | | |
|---|---|---|---|---|
| 2 | Continuous Hinge | CFM__HD1 - DOOR | | PE |

NOT FOR BIDDING

| | | | | |
|---|---|---|---|---|
| | | HEIGHT | | |
| 2 | Push Bar & Pull | BF15847 T1 | US32D | RO |
| 2 | Surf Overhead Stop | 8-336 | 630 | RF |
| 2 | Surface Closer | J7500 | 689 | NO |

Notes: Perimeter/meeting stile seals by frame/door supplier.

**Set: 18.1**

Doors: 100L.A, 100L.B

| | | | | |
|---|---|---|---|---|
| 2 | Continuous Hinge | CFM__HD1 - DOOR HEIGHT | | PE |
| 2 | Push Bar & Pull | BF15847 T1 | US32D | RO |
| 2 | Surf Overhead Hold Open | 8-Y26 | 630 | RF |
| 2 | Surface Closer | J750 | 689 | NO |

Notes: Perimeter/meeting stile seals by frame/door supplier.

**Set: 19.0**

Doors: 100R.A, 100R.C, 158, 159, 162, 174D.A, 175

| | | | | |
|---|---|---|---|---|
| 6 | Hinge (heavy weight) | T4A3786 | US26D | MK |
| 1 | Removable Mullion | 907BKM - DOOR HEIGHT | | RU |
| 1 | Exit Device (rim, dummy trim) | ED5200 128950ET | 630 | RU |
| 1 | Exit Device (rim, nightlatch) | ED5200 128957ET | 630 | RU |
| 2 | Cylinder (type to suit) | 1080 (or) 3080 CT6R | 630 | RU |
| 2 | Cylinder Core | CR8027 CKC2 | 630 | RU |
| 2 | Surface Closer | R7500 (or) PR7500 | 689 | NO |
| 2 | Kick Plate | K1050 10" BEV | US32D | RO |
| 2 | Wall Stop | 409 | US32D | RO |
| 1 | Gasketing | S773BL | | PE |
| 1 | Gasketing | 5110BL | | PE |

**Set: 20.0**

Doors: 148

| | | | | |
|---|---|---|---|---|
| 6 | Hinge (heavy weight) | T4A3786 | US26D | MK |
| 1 | Removable Mullion | 907BKM - DOOR HEIGHT | | RU |

NOT FOR BIDDING

| | | | | |
|---|---|---|---|---|
| 1 | Exit Device (rim, dummy trim) | ED5200 128950ET | 630 | RU |
| 1 | Exit Device (rim, nightlatch) | ED5200 128957ET | 630 | RU |
| 2 | Cylinder (type to suit) | 1080 (or) 3080 CT6R | 630 | RU |
| 2 | Cylinder Core | CR8027 CKC2 | 630 | RU |
| 2 | Surface Closer | CPS7500 | 689 | NO |
| 2 | Kick Plate | K1050 10" BEV | US32D | RO |
| 1 | Gasketing | S773BL | | PE |
| 1 | Gasketing | 5110BL | | PE |
| 2 | Astragal | 297AS | | PE |

**Set: 21.0**

Doors: 174A.A, 174B.A, 201.A, 201.B

| | | | | |
|---|---|---|---|---|
| 3 | Hinge (heavy weight) | T4A3786 | US26D | MK |
| 1 | Exit Device (rim, nightlatch) | ED5200 128957ET | 630 | RU |
| 1 | Cylinder (type to suit) | 1080 (or) 3080 CT6R | 630 | RU |
| 1 | Cylinder Core | CR8027 CKC2 | 630 | RU |
| 1 | Surface Closer | CPS7500 (or) PR7500 | 689 | NO |
| 1 | Kick Plate | K1050 10" BEV | US32D | RO |
| 1 | Wall Stop | 409 | US32D | RO |
| 1 | Gasketing | S773BL | | PE |

**Set: 22.0**

Doors: 174A.A, 174C, 174D.B

| | | | | |
|---|---|---|---|---|
| 4 | Hinge (heavy weight) | T4A3786 | US26D | MK |
| 1 | Exit Device (rim, nightlatch) | ED5200 128957ET | 630 | RU |
| 1 | Cylinder (type to suit) | 1080 (or) 3080 CT6R | 630 | RU |
| 1 | Cylinder Core | CR8027 CKC2 | 630 | RU |
| 1 | Surface Closer | CPS7500 | 689 | NO |
| 1 | Kick Plate | K1050 10" BEV | US32D | RO |
| 1 | Gasketing | S773BL | | PE |

**Set: 23.0**

Doors: 100O

| | | | | |
|---|---|---|---|---|
| 6 | Hinge (heavy weight) | T4A3786 | US26D | MK |
| 1 | Removable Mullion | 907BKM - DOOR HEIGHT | | RU |
| 2 | Exit Device (rim, passage) | ED5200 128910ET | 630 | RU |

NOT FOR BIDDING

| | | | | |
|---|---|---|---|---|
| 1 | Cylinder (type to suit) | 1080 (or) 3080 CT6R | 630 | RU |
| 1 | Cylinder Core | CR8027 CKC2 | 630 | RU |
| 2 | Surface Closer | R7500 (or) PR7500 | 689 | NO |
| 2 | Kick Plate | K1050 10" BEV | US32D | RO |
| 2 | Electromagnetic Holder | 998M VOLTAGE/CURRENT TO SUIT | 689 | RF |
| 1 | Gasketing | S88BL | | PE |
| 1 | Gasketing | 5110BL | | PE |

**Set: 23.1**

Doors: 100S

| | | | | |
|---|---|---|---|---|
| 6 | Hinge (heavy weight) | T4A3786 | US26D | MK |
| 1 | Removable Mullion | 907BKM - DOOR HEIGHT | | RU |
| 1 | Exit Device (rim, dummy trim) | ED5200 128950ET | 630 | RU |
| 1 | Exit Device (rim, nightlatch) | ED5200 128957ET | 630 | RU |
| 2 | Cylinder (type to suit) | 1080 (or) 3080 CT6R | 630 | RU |
| 2 | Cylinder Core | CR8027 CKC2 | 630 | RU |
| 2 | Surface Closer | R7500 (or) PR7500 | 689 | NO |
| 2 | Kick Plate | K1050 10" BEV | US32D | RO |
| 2 | Electromagnetic Holder | 998M VOLTAGE/CURRENT TO SUIT | 689 | RF |
| 1 | Gasketing | S88BL | | PE |
| 1 | Gasketing | 5110BL | | PE |

Notes: Connect holder to fire alarm system to release upon fire alarm/lockdown event.

**Set: 24.0**

Doors: 299A

| | | | | |
|---|---|---|---|---|
| 6 | Hinge (heavy weight) | T4A3786 | US26D | MK |
| 1 | Removable Mullion | 907BKM - DOOR HEIGHT | | RU |
| 2 | Exit Device (rim, passage) | ED5200A 128910ET | 630 | RU |
| 1 | Cylinder (type to suit) | 1080 (or) 3080 CT6R | 630 | RU |
| 1 | Cylinder Core | CR8027 CKC2 | 630 | RU |
| 2 | Surface Closer | R7500 (or) PR7500 | 689 | NO |

NOT FOR BIDDING

| | | | | |
|---|---|---|---|---|
| 2 | Kick Plate | K1050 10" BEV | US32D | RO |
| 2 | Electromagnetic Holder | 980M VOLTAGE/CURRENT TO SUIT | 689 | RF |
| 1 | Gasketing | S88BL | | PE |
| 1 | Gasketing | 5110BL | | PE |
| 2 | Astragal | 297AS | | PE |

Notes: Connect holder to fire alarm system to release upon fire alarm.

**Set: 25.0**

Doors: 174.B

| | | | | |
|---|---|---|---|---|
| 2 | Continuous Hinge | CFM__HD__ - DOOR HEIGHT | | PE |
| 1 | Removable Mullion | 907BK__ - DOOR HEIGHT | | RU |
| 1 | Exit Device (rim, dummy trim) | ED5200 128950ET | 630 | RU |
| 1 | Exit Device (rim, nightlatch) | ED5200 128957ET | 630 | RU |
| 2 | Cylinder (type to suit) | 1080 (or) 3080 CT6R | 630 | RU |
| 2 | Cylinder Core | CR8027 CKC2 | 630 | RU |
| 2 | Surface Closer | CPS7500 | 689 | NO |
| 2 | Kick Plate | K1050 10" BEV | US32D | RO |
| 1 | Gasketing | S773BL | | PE |
| 1 | Gasketing | 5110BL | | PE |
| 2 | Astragal | 297AS | | PE |

**Set: 26.0**

Doors: 109, 131, 155B, 209, 231

| | | | | |
|---|---|---|---|---|
| 2 | Hinge (heavy weight) | T4A3786 | US26D | MK |
| 1 | Electric Hinge (heavy weight) | T4A3786-QC12 | US26D | MK |
| 1 | Card Reader Lock | ML20606 x SELP10-SEC 128X CT6R | 626 | RU |
| 1 | Cylinder Core | CR8027 CKC2 | 630 | RU |
| 1 | Surface Closer | R7500 (or) PR7500 | 689 | NO |
| 1 | Kick Plate | K1050 10" BEV | US32D | RO |
| 1 | Wall Stop | 409 | US32D | RO |
| 3 | Silencer | 608 (or) 609 | | RO |
| 1 | Frame Harness | QC-C1500P | | MK |
| 1 | Door Harness | QC-C___ - LENGTH | | MK |

NOT FOR BIDDING

| | | | | |
|---|---|---|---|---|
| | | TO SUIT | | |
| 1 | Door Contact Switch | BY SECURITY - PREP DOOR/FRAME | | OT |
| 1 | Lock Power | BY SECURITY | | |

Notes: Electronic Operation: Valid card unlocks outside lever or key retracts latchbolt. Free egress at all times. In case of power loss, door remains locked and latched.

**Set: 27.0**

Doors: 102

| | | | | |
|---|---|---|---|---|
| 2 | Hinge (heavy weight) | T4A3786 | US26D | MK |
| 1 | Electric Hinge (heavy weight) | TA3786-CC12 | US26D | MK |
| 1 | Card Reader Lock | ML20606 x SELP10-REC 128X CT6R | 626 | RU |
| 3 | Deadbolt | DL2212 CT6 | 626 | RU |
| 2 | Cylinder Core | CR8027 CKC2 | 630 | RU |
| 1 | Surface Closer | PR7500 (or) PR7500 | 689 | NO |
| 1 | Kick Plate | K1050 10" BEV | US32D | RO |
| 1 | Wall Stop | 409 | US32D | RO |
| 1 | Gasketing | S88BL | | PE |
| 1 | Frame Harness | QC-C1500P | | MK |
| 1 | Door Harness | QC-C___ - LENGTH TO SUIT | | MK |
| 1 | Door Contact Switch | BY SECURITY - PREP DOOR/FRAME | | OT |
| 1 | Lock Power | BY SECURITY | | |

Notes: Electronic Operation: Valid card unlocks outside lever or key retracts latchbolt. Free egress at all times. In case of power loss, door remains locked and latched.

**Set: 28.0**

Doors: 163, 167, 167A, 168

| | | | | |
|---|---|---|---|---|
| 6 | Hinge | TA2714 | US26D | MK |
| 1 | Dust Proof Strike | 570 | US26D | RO |
| 2 | Flush Bolt (manual) | 555 (or) 557 | US26D | RO |
| 1 | Storeroom Lock | ML2057 128X CT6R | 626 | RU |
| 1 | Cylinder Core | CR8027 CKC2 | 630 | RU |

NOT FOR BIDDING

| | | | | |
|---|---|---|---|---|
| 2 | Wall Stop | 409 | US32D | RO |
| 2 | Silencer | 608 (or) 609 | | RO |

**Set: 29.0**

Doors: 148A, 158A.C, 158C, 1L.A, 1L.B, 1L.C, 1L.D, 2L.A, 2L.B, 2L.C, 2L.D

| | | | | |
|---|---|---|---|---|
| 6 | Hinge | TA2714 | US26D | MK |
| 1 | Dust Proof Strike | 570 | US26D | RO |
| 2 | Flush Bolt (manual) | 555 (or) 557 | US26D | RO |
| 1 | Storeroom Lock | ML2057 128X CT6R | 626 | RU |
| 1 | Cylinder Core | CR8027 CKC2 | 630 | RU |
| 2 | Surf Overhead Stop | 10-X36 | 652 | RF |
| 2 | Silencer | 608 (or) 609 | | RO |

**Set: 30.0**

Doors: 173

| | | | | |
|---|---|---|---|---|
| 6 | Hinge | TA2714 | US26D | MK |
| 1 | Dust Proof Strike | 570 | US26D | RO |
| 1 | Flush Bolt | 2842 (or) 2942 | US26D | RO |
| 1 | Storeroom Lock | ML2057 128X CT6R | 626 | RU |
| 1 | Cylinder Core | CR8027 CKC2 | 630 | RU |
| 1 | Coordinator | 1700 | Black | RO |
| 2 | Surface Closer | R7500 (or) PR7500 | 689 | NO |
| 2 | Kick Plate | K1050 10" BEV | US32D | RO |
| 2 | Wall Stop | 409 | US32D | RO |
| 1 | Gasketing | S88BL | | PE |
| 1 | Astragal | S771C | | PE |
| 1 | Astragal | 357SP | | PE |

**Set: 31.0**

Doors: 124A

| | | | | |
|---|---|---|---|---|
| 6 | Hinge | TA2714 | US26D | MK |
| 1 | Dust Proof Strike | 570 | US26D | RO |
| 1 | Flush Bolt | 2842 (or) 2942 | US26D | RO |
| 1 | Storeroom Lock | ML2057 128X CT6R | 626 | RU |
| 1 | Cylinder Core | CR8027 CKC2 | 630 | RU |
| 1 | Coordinator | 1700 | Black | RO |
| 2 | Surface Closer | CLP7500 | 689 | NO |

NOT FOR BIDDING

| | | | | |
|---|---|---|---|---|
| 2 | Kick Plate | K1050 10" BEV | US32D | RO |
| 1 | Gasketing | S88BL | | PE |
| 1 | Astragal | S771C | | PE |
| 1 | Astragal | 357SP | | PE |

**Set: 32.0**

Doors: 101C, 101F, 102B, 102E.A, 102F, 102H.A, 102H.B, 102K, 117, 119, 122B, 127A, 127C, 128A, 128B, 129A, 132A, 132B, 139, 140, 141, 142, 144, 148C, 148K, 155A, 156, 156A, 157A, 157B, 158A.A, 158A.B, 158B.A, 158B.B, 161, 167C, 167D, 175B, 177, 180, 201A.B, 217, 219, 223A, 223B, 239, 241, 244A, 244B, 245, 246

| | | | | |
|---|---|---|---|---|
| 3 | Hinge | TA2714 | US26D | MK |
| 1 | Storeroom Lock | ML2057 128X CT6R | 626 | RU |
| 1 | Cylinder Core | CR8027 CKC2 | 630 | RU |
| 1 | Wall Stop | 409 | US32D | RO |
| 3 | Silencer | 608 (or) 609 | | RO |

**Set: 33.0**

Doors: 102G, 137A, 144A, 160, 165, 177A, 179

| | | | | |
|---|---|---|---|---|
| 3 | Hinge | TA2714 | US26D | MK |
| 1 | Storeroom Lock | ML2057 128X CT6R | 626 | RU |
| 1 | Cylinder Core | CR8027 CKC2 | 630 | RU |
| 1 | Surf Overhead Stop | 10-X36 | 652 | RF |
| 3 | Silencer | 608 (or) 609 | | RO |

**Set: 34.0**

Doors: 103, 104, 105, 106, 107, 108, 110, 111, 112, 113, 114, 118.A, 118.B, 124, 125, 127, 129, 130, 132, 133, 134, 136, 137, 153.A, 201A.A, 201B, 203, 204, 205, 206, 207, 208, 210, 211, 212, 213, 214, 218.A, 218.B, 224, 226, 227, 228, 229, 230, 232, 233, 234, 235, 236, 237, 240.A, 240.B

| | | | | |
|---|---|---|---|---|
| 3 | Hinge | TA2714 | US26D | MK |
| 1 | Storeroom Lock | ML2057 128X CT6R | 626 | RU |
| 1 | Cylinder Core | CR8027 CKC2 | 630 | RU |
| 1 | Surface Closer | PR7500 | 689 | NO |
| 1 | Kick Plate | K1050 10" BEV | US32D | RO |
| 1 | Wall Stop | 409 | US32D | RO |
| 3 | Silencer | 608 (or) 609 | | RO |

**Set: 34.1**

NOT FOR BIDDING

Doors: 115.A, 115.B, 128, 215.A, 215.B, 225.A, 225.B

| | | | | |
|---|---|---|---|---|
| 3 | Hinge | TA2714 | US26D | MK |
| 1 | Exit Device (rim, nightlatch) | ED5200 128957ET | 630 | RU |
| 1 | Cylinder Core | CR8027 CKC2 | 630 | RU |
| 1 | Surface Closer | PR7500 | 689 | NO |
| 1 | Kick Plate | K1050 10" BEV | US32D | RO |
| 1 | Wall Stop | 409 | US32D | RO |
| 3 | Silencer | 608 (or) 609 | | RO |

**Set: 35.0**

Doors: 147A

| | | | | |
|---|---|---|---|---|
| 3 | Hinge | TA2714 | US26D | MK |
| 1 | Storeroom Lock | ML2057 128X CT6R | 626 | RU |
| 1 | Cylinder Core | CR8027 CKC2 | 630 | RU |
| 1 | Surface Closer | CPS7500T | 689 | NO |
| 1 | Kick Plate | K1050 10" BEV | US32D | RO |
| 3 | Silencer | 608 (or) 609 | | RO |

Notes: INTERIOR STORAGE/MECH X KEY ACCESS (WD-HM/SINGLE)

**Set: 36.0**

Doors: 170.B, 198A, 222

| | | | | |
|---|---|---|---|---|
| 3 | Hinge | TA2714 | US26D | MK |
| 1 | Storeroom Lock | ML2057 128X CT6R | 626 | RU |
| 1 | Cylinder Core | CR8027 CKC2 | 630 | RU |
| 1 | Surface Closer | R7500 (or) PR7500 | 689 | NO |
| 1 | Kick Plate | K1050 10" BEV | US32D | RO |
| 1 | Wall Stop | 409 | US32D | RO |
| 1 | Gasketing | S88BL | | PE |

Notes: INTERIOR STORAGE/MECH X KEY ACCESS (WD-HM/SINGLE)

**Set: 37.0**

Doors: 101A, 101B, 101E, 101G

| | | | | |
|---|---|---|---|---|
| 3 | Hinge | TA2714 | US26D | MK |
| 1 | Passage Latch | ML2010 128X | 626 | RU |

NOT FOR BIDDING

| | | | | |
|---|---|---|---|---|
| 1 | Wall Stop | 409 | US32D | RO |
| 3 | Silencer | 608 (or) 609 | | RO |

**Set: 38.0**

Doors: 148L

| | | | | |
|---|---|---|---|---|
| 6 | Hinge | TA2714 | US26D | MK |
| 1 | Dust Proof Strike | 570 | US26D | RO |
| 2 | Flush Bolt (manual) | 555 (or) 557 | US26D | RO |
| 1 | Classroom Lock | ML2055 128X CT6R | 626 | RU |
| 1 | Cylinder Core | CR8027 CKC2 | 630 | RU |
| 1 | Surface Closer | R7500 (or) PR7500 | 689 | NO |
| 2 | Kick Plate | K1050 10" BEV | US32D | RO |
| 2 | Wall Stop | 409 | US32D | RO |
| 2 | Silencer | 608 (or) 609 | | RO |

**Set: 39.0**

Doors: 147B, 147E, 153.B, 157, 223, 224

| | | | | |
|---|---|---|---|---|
| 3 | Hinge | TA2714 | US26D | MK |
| 1 | Classroom Lock | ML2055 128X CT6R | 626 | RU |
| 1 | Cylinder Core | CR8027 CKC2 | 630 | RU |
| 1 | Surface Closer | R7500 (or) PR7500 | 689 | NO |
| 1 | Kick Plate | K1050 10" BEV | US32D | RO |
| 1 | Wall Stop | 409 | US32D | RO |
| 3 | Silencer | 608 (or) 609 | | RO |

**Set: 39.1**

Doors: 102I.A

| | | | | |
|---|---|---|---|---|
| 3 | Hinge | TA2714 | US26D | MK |
| 1 | Storeroom Lock | ML2057 128X CT6R | 626 | RU |
| 1 | Cylinder Core | CR8027 CKC2 | 630 | RU |
| 1 | Surface Closer | R7500 (or) PR7500 | 689 | NO |
| 1 | Kick Plate | K1050 10" BEV | US32D | RO |
| 1 | Electromagnetic Holder | 998M VOLTAGE/CURRENT TO SUIT | 689 | RF |
| 3 | Silencer | 608 (or) 609 | | RO |

NOT FOR BIDDING

Notes: Connect holder to fire alarm system to release upon fire alarm/lockdown event.

**Set: 40.0**

Doors: 101, 101H, 102E.B, 102I.B, 122.A, 123, 145A, 145B

| | | | | |
|---|---|---|---|---|
| 3 | Hinge | TA2714 | US26D | MK |
| 1 | Classroom Lock | ML2055 128X CT6R | 626 | RU |
| 1 | Cylinder Core | CR8027 CKC2 | 630 | RU |
| 1 | Surface Closer | R7500 (or) PR7500 | 689 | NO |
| 1 | Kick Plate | K1050 10" BEV | US32D | RO |
| 1 | Wall Stop | 409 | US32D | RO |
| 1 | Gasketing | S88BL | | PE |

**Set: 41.0**

Doors: 101D, 110A, 127B, 130A, 178, 210A, 230A

| | | | | |
|---|---|---|---|---|
| 3 | Hinge | TA2714 | US26D | MK |
| 1 | Privacy Lock | ML2060 128X MT3 M19V | 626 | RU |
| 2 | Kick Plate | K1050 10" BEV | US32D | RO |
| 1 | Wall Stop | 409 | US32D | RO |
| 3 | Silencer | 608 (or) 609 | | RO |

Notes: INTERIOR CLRM TOILET X PRIVACY (WD-HM/SINGLE)

**Set: 42.0**

Doors: 102C, 102D, 148F, 148H, 154, 167B

| | | | | |
|---|---|---|---|---|
| 3 | Hinge | TA2714 | US26D | MK |
| 1 | Privacy Lock | ML2060 128X MT3 M19V | 626 | RU |
| | Surface Closer | R7500 (or) PR7500 | 689 | NO |
| 2 | Kick Plate | K1050 10" BEV | US32D | RO |
| 1 | Wall Stop | 409 | US32D | RO |
| 3 | Silencer | 608 (or) 609 | | RO |

**Set: 43.0**

Doors: 164, 166

NOT FOR BIDDING

| | | | | |
|---|---|---|---|---|
| 3 | Hinge | TA2714 | US26D | MK |
| 1 | Privacy Lock | ML2060 128X MT3 M19V | 626 | RU |
| 1 | Surface Closer | CLP7500 | 689 | NO |
| 1 | Kick Plate | K1050 10" BEV | US32D | RO |
| 3 | Silencer | 608 (or) 609 | | RO |

**Set: 44.0**

Doors: 171, 172

| | | | | |
|---|---|---|---|---|
| 3 | Hinge | TA2714 | US26D | MK |
| 1 | Privacy Lock | ML2060 128X MT3 M19V | 626 | RU |
| 1 | Surface Closer | R7500 (or) PR7500 | 689 | NO |
| 1 | Kick Plate | K1050 10" BEV | US32D | RO |
| 1 | Wall Stop | 409 | US32D | RO |
| 1 | Gasketing | S88BL | | PE |

**Set: 45.0**

Doors: 148D, 148I, 176

| | | | | |
|---|---|---|---|---|
| 3 | Hinge (heavy weight) | T4A3786 | US26D | MK |
| 1 | Deadbolt | DL2217 CT6 | 626 | RU |
| 1 | Cylinder Core | CR8027 CKC2 | 630 | RU |
| 1 | Door Pull | BF Y110-RKW Mtg-Type 1 | US32D | RO |
| 1 | Push Plate | 70G (4 x 20) | US32D | RO |
| 1 | Surface Closer | R7500 (or) PR7500 | 689 | NO |
| 2 | Kick Plate | K1050 10" BEV | US32D | RO |
| 1 | Wall Stop | 409 | US32D | RO |
| 3 | Silencer | 608 (or) 609 | | RO |

**Set: 46.0**

Doors: 100P, 100R.B

| | | | | |
|---|---|---|---|---|
| 8 | Hinge (heavy weight) | T4A3786 | US26D | MK |
| 2 | Door Pull | BF Y110-RKW Mtg-Type 1 | US32D | RO |
| 2 | Push Plate | 70G (4 x 20) | US32D | RO |
| 2 | Surface Closer | CPS7500 | 689 | NO |
| 2 | Kick Plate | K1050 10" BEV | US32D | RO |

NOT FOR BIDDING

| | | | | |
|---|---|---|---|---|
| 1 | Gasketing | S773BL | | PE |
| 2 | Astragal | 297AS | | PE |

**Set: 47.0**

Doors: 174A.B, 174B.B

| | | | | |
|---|---|---|---|---|
| 3 | Hinge (heavy weight) | T4A3786 | US26D | MK |
| 1 | Door Pull | BF Y110-RKW Mtg Type 1 | US32D | RO |
| 1 | Push Plate | 70G (4 x 20) | US32D | RO |
| 1 | Surface Closer | R7500 (or PR7500) | 689 | NO |
| 1 | Kick Plate | K1050 10" REV | US32D | RO |
| 1 | Wall Stop | 409 | US32D | RO |
| 1 | Gasketing | S773BL | | PE |

END OF SECTION 087100

NOT FOR BIDDING

# SECTION 088000
# GLAZING

## PART 1 GENERAL

1.01 SECTION INCLUDES

A. Insulating glass units.

B. Glazing units.

C. Glazing compounds and accessories.

1.02 RELATED REQUIREMENTS

A. Section 081113 - Hollow Metal Doors and Frames: Glazed lites in doors and borrowed lites.

B. Section 081416 - Flush Wood Doors: Glazed lites in doors.

C. Section 081613 - FRP Flush Doors: Glazed lites in doors.

D. Section 084123 - Fire Rated Aluminum-Framed Storefronts: Glazing in fire-rated windows.

E. Section 084313 - Aluminum-Framed Storefronts: Glazing furnished as part of storefront assembly.

F. Section 088723 - Safety and Security Films applied to glazing.

1.03 REFERENCE STANDARDS

A. 16 CFR 1201 - Safety Standard for Architectural Glazing Materials; current edition.

B. ANSI Z97.1 - American National Standard for Safety Glazing Materials Used in Buildings, Safety Performance Specifications and Methods of Test; 2010.

C. ASTM C864 - Standard Specification for Dense Elastomeric Compression Seal Gaskets, Setting Blocks, and Spacers; 2005 (Reapproved 2015).

D. ASTM C920 - Standard Specification for Elastomeric Joint Sealants; 2014a.

E. ASTM C1036 - Standard Specification for Flat Glass; 2011.

F. ASTM C1048 - Standard Specification for Heat-Strengthened and Fully Tempered Flat Glass; 2012.

G. ASTM C1172 - Standard Specification for Laminated Architectural Flat Glass; 2014.

H. ASTM C1193 - Standard Guide for Use of Joint Sealants; 2016.

I. ASTM E119 - Standard Test Methods for Fire Tests of Building Construction and Materials; 2016a.

J. ASTM E1300 - Standard Practice for Determining Load Resistance of Glass in Buildings; 2016.

K. GANA (SM) - GANA Sealant Manual; 2008.

L. ICC (IBC) - International Building Code; 2015.

M. IGMA TM-3000 - North American Glazing Guidelines for Sealed Insulating Glass Units for Commercial & Residential Use; 1990 (2004).

N. ITS (DIR) - Directory of Listed Products; current edition.

O. NFPA 252 - Standard Methods of Fire Tests of Door Assemblies; 2012.

P. NFPA 257 - Standard on Fire Test for Window and Glass Block Assemblies; 2012.

Q. NFRC 100 - Procedure for Determining Fenestration Product U-factors; 2014.

NOT FOR BIDDING

R. NFRC 200 - Procedure for Determining Fenestration Product Solar Heat Gain Coefficient and Visible Transmittance at Normal Incidence; 2014.

S. NFRC 300 - Test Method for Determining the Solar Optical Properties of Glazing Materials and Systems; 2014.

T. UL (DIR) - Online Certifications Directory; current listings at database.ul.com.

U. UL 9 - Standard for Fire Tests of Window Assemblies; Current Edition, Including All Revisions.

V. UL 10B - Standard for Fire Tests of Door Assemblies; Current Edition, Including All Revisions.

W. UL 10C - Standard for Positive Pressure Fire Tests of Door Assemblies; Current Edition, Including All Revisions.

X. UL 263 - Standard for Fire Tests of Building Construction and Materials; Current Edition, Including All Revisions.

1.04 SUBMITTALS

A. Product Data on Insulating Glass Unit and Glazing Unit Glazing Types: Provide structural, physical and environmental characteristics, size limitations, special handling and installation requirements.

B. Product Data on Glazing Compounds and Accessories: Provide chemical, functional, and environmental characteristics, limitations, special application requirements, and identify available colors.

C. Samples: Submit two samples 12 by 12 inch in size of glass units.

D. Certificate: Certify that products of this section meet or exceed specified requirements.

E. Warranty Documentation: Submit manufacturer warranty and ensure that forms have been completed in Owner's name and registered with manufacturer.

1.05 QUALITY ASSURANCE

A. Perform Work in accordance with IGMA TM-3000 for glazing installation methods. Maintain one copy on site.

B. Manufacturer Qualifications: Company specializing in manufacturing the products specified in this section with minimum three years of documented experience.

C. Installer Qualifications: Company specializing in performing work of the type specified and with at least three years documented experience.

1.06 FIELD CONDITIONS

A. Do not install glazing when ambient temperature is less than 40 degrees F.

B. Maintain minimum ambient temperature before, during and 24 hours after installation of glazing compounds.

1.07 WARRANTY

A. See Section 017800 - Closeout Submittals, for additional warranty requirements.

B. Insulating Glass Units: Provide a ten (10) year manufacturer warranty to include coverage for seal failure, interpane dusting or misting, including replacement of failed units.

C. Laminated Glass: Provide a ten (10) year manufacturer warranty to include coverage for delamination, including replacement of failed units.

NOT FOR BIDDING

**PART 2 PRODUCTS**

2.01 MANUFACTURERS

A. Float Glass Manufacturers:
   1. Guardian Industries Corp: www.sunguardglass.com.
   2. Pilkington North America Inc: www.pilkington.com/na.
   3. PPG Industries, Inc: www.ppgideascapes.com.
   4. Substitutions: Refer to Section 016000 - Product Requirements.

B. Fire-Resistance-Rated Glass: Provide products as required to achieve indicated fire-rating period.
   1. Manufacturers:
      a. SAFTIFIRST, a division of O'Keeffe's Inc: www.safti.com/#sle.
      b. Technical Glass Products: www.fireglass.com/#sle.
      c. Substitutions: Refer to Section 016000 - Product Requirements.

C. Fire-Protection-Rated Glass: Provide products as required to achieve indicated fire-rating period.
   1. Manufacturers:
      a. SAFTIFIRST, a division of O'Keeffe's Inc: www.safti.com/#sle.
      b. Technical Glass Products: www.fireglass.com/#sle.
      c. Substitutions: Refer to Section 016000 - Product Requirements.

2.02 PERFORMANCE REQUIREMENTS - EXTERIOR GLAZING ASSEMBLIES

A. Provide type and thickness of exterior glazing assemblies to support assembly dead loads, and to withstand live loads caused by positive and negative wind pressure acting normal to plane of glass.
   1. Comply with ASTM E1300 for design load resistance of glass type, thickness, dimensions, and maximum lateral deflection of supported glass.
   2. Provide glass edge support system sufficiently stiff to limit the lateral deflection of supported glass edges to less than 1/175 of their lengths under specified design load.
   3. Glass thicknesses listed are minimum.

B. Vapor Retarder and Air Barrier Seals: Provide completed assemblies that maintain continuity of building enclosure vapor retarder and air barrier.
   1. In conjunction with vapor retarder and joint sealer materials described in other sections.

C. Thermal and Optical Performance: Provide exterior glazing products with performance properties as indicated. Performance properties are in accordance with manufacturer's published data as determined with the following procedures and/or test methods:
   1. Center of Glass U-Value: Comply with NFRC 100 using Lawrence Berkeley National Laboratory (LBNL) WINDOW 6.3 computer program.
   2. Center of Glass Solar Heat Gain Coefficient (SHGC): Comply with NFRC 200 using Lawrence Berkeley National Laboratory (LBNL) WINDOW 6.3 computer program.
   3. Solar Optical Properties: Comply with NFRC 300 test method.

2.03 GLASS MATERIALS

A. Float Glass: Provide float glass based glazing unless noted otherwise.
   1. Annealed Type: ASTM C1036, Type I - Transparent Flat, Class 1 - Clear, Quality-Q3.
   2. Heat-Strengthened and Fully Tempered Types: ASTM C1048, Kind HS and FT.
   3. Fully Tempered Safety Glass: Complies with ANSI Z97.1 and 16 CFR 1201 criteria.

NOT FOR BIDDING

4. Impact Resistant Safety Glass: Complies with ANSI Z97.1 and 16 CFR 1201 criteria; Class A/Category II.

B. Laminated Glass: Float glass laminated in accordance with ASTM C1172.
1. Laminated Safety Glass: Complies with ANSI Z97.1 - Class A or 16 CFR 1201 - Category II impact test requirements.
2. Polyvinyl Butyral (PVB) Interlayer: 0.030 inch thick, minimum.

2.04 BASIS OF DESIGN - INSULATING GLASS UNITS

A. Type 1 - Vision glazing, with Low-E coating.
1. Applications: Exterior insulating glass glazing unless otherwise indicated.
2. Space between lites filled with argon.
3. Total Thickness: 1 inch.
4. Thermal Transmittance (U-Value): 0.24, nominal.
5. Visible Light Transmittance (VLT): 62 percent, nominal.
6. Solar Heat Gain Coefficient (SHGC): 0.27, nominal.
7. Metal Edge Spacers: Stainless steel, bent and soldered corners.
8. Edge Seal:
a. Dual-Sealed System: Provide polyisobutylene sealant as primary seal applied between spacer and glass panes, and silicone, polysulfide, or polyurethane sealant as secondary seal applied around perimeter.
9. Color: Black.
10. Basis of Design - Guardian Glass, LLC: www.guardianglass.com.
11. Outboard Lite: Annealed float glass, 1/4 inch thick, minimum.
a. Low-E Coating: SunGuard SNX 62/27 on #2 surface.
12. Inboard Lite: Annealed float glass, 1/4 inch thick.
a. Coating: No coating on inboard lite.
b. Glass: Clear.

B. Type 1A -Sealed Insulating Glass Units: Safety glazing:
1. Applications: Provide this type of glazing in the following locations:
a. Glazed lites in exterior doors.
b. Glazed sidelights and panels next to doors.
c. Other locations required by applicable federal, state, and local codes and regulations.
d. Other locations indicated on the drawings.
2. Type: Same as Type 1 except use fully tempered float glass for both outboard and inboard lites.

C. Type 1B -Sealed Insulating Glass Units: Obscure glazing:
Applications: Provide this type of glazing in the following locations:
a. Exterior windows in gymnasium.
b. Other locations indicated on the drawings.
2. Type: Same asType 1 except use patterned obscure glass for inboard lite. Both inboard and outboard lites shall be laminated glass.
a. Pattern: No. 62

D. Type 2 - Spandrel glazing.
1. Applications: Exterior spandrel glazing unless otherwise indicated.
2. Space between lites filled with argon.
3. Basis of Design - Guardian Glass, LLC: www.guardianglass.com.
4. Outboard Lite: Heat-strengthened float glass, 1/4 inch thick, minimum.

NOT FOR BIDDING

a. Tint: Clear.
b. Coating: Same as on vision units, on #2 surface.

5. Inboard Lite: Fully tempered float glass, 1/4 inch thick.
   a. Tint: Clear.
   b. Opacifier: Ceramic frit, on #3 surface.
   c. Opacifier Color: as selected by Architect from manufacturer's full range.
   d. Coating: OpaciCoat 300.
6. Total Thickness: 1 inch.

E. Other Manufacturers: Provide either the product identified as "Basis of Design" or an equivalent product of another acceptable manufacturer.

F. Substitution Procedures: See Section 016000 - Product Requirements.
   1. For any product not identified as "Basis of Design", submit information as specified for substitutions.

2.05 GLAZING UNITS

A. Type 3 - Monolithic Interior Vision Glazing:
   1. Applications: Interior glazing unless otherwise indicated.
   2. Glass Type: Fully tempered float glass.
   3. Tint: Clear.
   4. Thickness: 1/4 inch, nominal.
   5. Locations: Interior vision panels, doors and sidelights.
   6. Type 3A: Same as Type 3 except use patterned obscure glass.
      a. Pattern: No. 62

B. Type 4 - Fire-Resistance-Rated Glazing: Type, thickness, and configuration of glazing that contains flame, smoke, and blocks radiant heat, as required to achieve indicated fire-rating period of 60 minutes.
   1. Applications:
      a. Glazing in fire-rated window assembly.
      b. Other locations as indicated on drawings.
   2. Provide products listed by ITS (DIR) or UL (DIR) and approved by authorities having jurisdiction.
   3. Safety Glazing Certification: 16 CFR 1201 Category II.
   4. Glazing Method: As required for fire rating.
   5. Fire-Rating Period: 60 minutes.
   6. Nominal Thickness: 1-1/8 inch.
   7. Markings for Fire-Resistance-Rated Glazing Assemblies: Provide permanent markings on fire-resistance-rated glazing in compliance with ICC (IBC), local building code, and authorities having jurisdiction.
      a. "W" - meets wall assembly criteria of ASTM E119 or UL 263 fire test standards.
      b. "D" - meets fire door assembly criteria of NFPA 252, UL 10B, or UL 10C fire test standards.
      c. "H" - meets fire door assembly hose stream test of NFPA 252, UL 10B, or UL 10C fire test standards.
      d. "T" - meets temperature rise of not more than 450 degrees F above ambient at end of 30 minutes fire exposure in accordance with NFPA 252, UL 10B, or UL 10C fire test standards.
      e. "XXX" - placeholder that represents fire-rating period, in minutes.
   8. Manufacturers:

NOT FOR BIDDING

a. SAFTIFIRST, a division of O'Keeffe's Inc; SuperLite II-XL 60: www.safti.com/#sle.
b. Technical Glass Products; Pilkington Pyrostop 60: www.fireglass.com/#sle.
c. Substitutions: Refer to Section 016000 - Product Requirements.

C. Type 5 - Fire-Protection-Rated Glazing: Type, thickness, and configuration of glazing that contains flame, smoke, and does not block radiant heat, as required to achieve indicated fire-rating period of 45 minutes.
1. Applications:
a. Glazing in fire-rated door assembly.
b. Glazing in fire-rated window assembly.
c. Other locations as indicated on drawings.
2. Provide products listed by ITS (DIR) or UL (DIR) and approved by authorities having jurisdiction.
3. Safety Glazing Certification: 16 CFR 1201 Category II.
4. Glazing Method: As required for fire rating.
5. Fire-Rating Period: 45 minutes.
6. Markings for Fire-Protection-Rated Glazing Assemblies: Provide permanent markings on fire-protection-rated glazing in compliance with ICC (IBC), local building code, and authorities having jurisdiction
a. "D" - meets fire door assembly criteria of NFPA 252, UL 10B, or UL 10C fire test standards.
b. "OH" - meets fire window assembly criteria including hose stream test of NFPA 257, or UL 9 fire test standards.
c. "H" - meets fire door assembly hose stream test of NFPA 252, UL 10B, or UL 10C fire tests standards.
d. "XXX" - placeholder that represents fire-rating period, in minutes.
7. Products:
a. Technical Glass Products; Pilkington Pyrostop 45: www.fireglass.com
b. Safti-First SuperLite II-XL 45: safti.com
c. Substitutions: See Section 016000.

D. Type 6 - Fire-Rated Safety Glazing - 20 minute:
1. Applications: Provide this type of glazing in the following locations:
a. Glazed lites in doors having a 20 minute fire rating.
b. Other locations indicated on the drawings.
2. Manufacturer and Product:
a. Technical Glass Products Fireglass20: www.fireglass.com
b. Safti-First SuperLite I-W: safti.com: safti.com
c. Substitutions: See Section 016000.
3. Fire Rating: 20 minutes, without hose stream test.
4. Type: fire-rated and impact safety-rated glazing material.
5. Thickness: 1/4 inch (6 mm).
6. Impact safety rating: ANSI Z97.1 and CPSC 16CFR1201 (Cat I and II)
7. Glazing Method: As required for fire rating.

2.06 GLAZING COMPOUNDS

A. Butyl Sealant: Single component; ASTM C920, Grade NS, Class 12-1/2, Uses M and A, Shore A hardness of 10 to 20; black color.

NOT FOR BIDDING

B. Polysulfide Sealant: Two component; chemical curing, non-sagging type; ASTM C920, Type M, Grade NS, Class 25, Uses M, A, and G; with cured Shore A hardness range of 15 to 25; color as selected.

C. Silicone Sealant: Single component; neutral curing; capable of water immersion without loss of properties; non-bleeding, non-staining; ASTM C920, Type S, Grade NS, Class 25, Uses M, A, and G; with cured Shore A hardness range of 15 to 25; clear color.

2.07 ACCESSORIES

A. Setting Blocks: Silicone, with 80 to 90 Shore A durometer hardness; ASTM C864 Option II. Length of 0.1 inch for each square foot of glazing or minimum 4 inch by width of glazing rabbet space minus 1/16 inch by height to suit glazing method and pane weight and area.

B. Spacer Shims: Neoprene, 50 to 60 Shore A durometer hardness; ASTM C864 Option II. Minimum 3 inch long by one half the height of the glazing stop by thickness to suit application, self adhesive on one face.

C. Glazing Tape, Back Bedding Mastic Type: Preformed, butyl-based 100 percent solids compound with integral resilient spacer rod applicable to application indicated; 5 to 30 cured Shore A durometer hardness; coiled on release paper; black color.
   1. Width: As required for application.
   2. Thickness: As required for application.

D. Glazing Gaskets: Resilient silicone extruded shape to suit glazing channel retaining slot; color black.

**PART 3 EXECUTION**

3.01 VERIFICATION OF CONDITIONS

A. Verify that openings for glazing are correctly sized and within tolerances, including those for size, squareness, and offsets at corners.

B. Verify that surfaces of glazing channels or recesses are clean, free of obstructions that may impede moisture movement, weeps are clear, and support framing is ready to receive glazing system.

C. Verify that sealing between joints of glass framing members has been completed effectively.

D. Proceed with glazing system installation only after unsatisfactory conditions have been corrected.

3.02 PREPARATION

A. Clean contact surfaces with appropriate solvent and wipe dry immediately before glazing. Remove coatings that are not tightly bonded to substrates.

B. Seal porous glazing channels or recesses with substrate compatible primer or sealer.

C. Prime surfaces scheduled to receive sealant where required for proper sealant adhesion.

3.03 INSTALLATION, GENERAL

A. Install glazing in compliance with written instructions of glass, gaskets, and other glazing material manufacturers, unless more stringent requirements are indicated, including those in glazing referenced standards.

B. Install glazing sealants in accordance with ASTM C1193, GANA (SM), and manufacturer's instructions.

C. Do not exceed edge pressures around perimeter of glass lites as stipulated by glass manufacturer.

NOT FOR BIDDING

D. Set glass lites of system with uniform pattern, draw, bow, and similar characteristics.

E. Set glass lites in proper orientation so that coatings face exterior or interior as indicated.

F. Prevent glass from contact with any contaminating substances that may be the result of construction operations such as, and not limited to the following; weld splatter, fire-safing, plastering, mortar droppings, etc.

3.04 INSTALLATION - DRY GLAZING METHOD (GASKET GLAZING)

A. Application - Exterior and/or Interior Glazed: Set glazing infills from either the exterior or the interior of the building.

B. Place setting blocks at 1/4 points with edge block no more than 6 inch from corners.

C. Rest glazing on setting blocks and push against fixed stop with sufficient pressure on gasket to attain full contact.

D. Install removable stops without displacing glazing gasket; exert pressure for full continuous contact.

3.05 INSTALLATION - PRESSURE GLAZED SYSTEMS

A. Application - Exterior Glazed: Set glazing infills from exterior side of building.

B. Place setting blocks at 1/4 points with edge block no more than 6 inch from corners.

C. Rest glazing on setting blocks and push against fixed stop with sufficient pressure on gasket to attain full contact.

D. Install pressure plates without displacing glazing gasket; exert pressure for full continuous contact.

E. Install cover plate.

3.06 FIELD QUALITY CONTROL

A. Glass and Glazing product manufacturers to provide field surveillance of the installation of their products.

B. Monitor and report installation procedures and unacceptable conditions.

3.07 CLEANING

A. Remove excess glazing materials from finish surfaces immediately after application using solvents or cleaners recommended by manufacturers.

B. Remove non-permanent labels immediately after glazing installation is complete.

C. Clean glass and adjacent surfaces after sealants are fully cured.

D. Clean glass on both exposed surfaces not more than 4 days prior to Date of Substantial Completion in accordance with glass manufacturer's written recommendations.

3.08 PROTECTION

A. Remove and replace glass that is damaged during construction period prior to Date of Substantial Completion.

**END OF SECTION**

NOT FOR BIDDING

# SECTION 088723
# SAFETY AND SECURITY FILMS

## PART 1 GENERAL

1.01 SECTION INCLUDES

A. Glazing film applied to new glazing assemblies.

B. New Glazing: Factory or shop install film to glazing before installation in frames.

C. Glazing assemblies to receive film are indicated on drawings.

1.02 RELATED REQUIREMENTS

A. Section 088000 - Glazing: New glazing to received film.

1.03 SUBMITTALS

A. See Section 013000 - Administrative Requirements, for submittal procedures.

B. Product Data: Manufacturer's data sheets on each product to be used, including:
   1. Record of product certification for safety requirements.
   2. Preparation instructions and recommendations.
   3. Storage and handling requirements and recommendations.
   4. Installation methods.

C. Samples: For each film product to be used, minimum size 4 inches by 6 inches, representing actual product, color, and patterns.

D. Test Reports: Detailed reports of full-scale chamber tests to specified criteria, using assemblies identical to those required for this project.

E. Specimen Warranty.

1.04 QUALITY ASSURANCE

A. Manufacturer Qualifications: Glazing film manufacturer specializing in manufacture of safety glazing films with minimum 10 years successful experience.

B. Installer Qualifications: Certified by glazing film manufacturer.

1.05 DELIVERY, STORAGE AND HANDLING

A. Store products in manufacturer's unopened packaging until ready for installation.

B. Store and dispose of solvent-based materials, and materials used with solvent-based materials, in accordance with requirements of authorities having jurisdiction.

1.06 FIELD CONDITIONS

A. Maintain environmental conditions (temperature, humidity, and ventilation) within limits recommended by manufacturer for optimum results. Do not install products under environmental conditions outside manufacturer's absolute limits.

1.07 WARRANTY

A. Provide 10 year manufacturer's replacement warranty to cover film against peeling, cracking, discoloration, and deterioration.

## PART 2 PRODUCTS

2.01 MANUFACTURERS

A. 3M Window Film: www.solutions.3m.com/#sle.

B. Substitutions: See Section 016000 - Product Requirements.

NOT FOR BIDDING

2.02 SAFETY AND SECURITY GLAZING FILM

A. Clear security film with frame attachment.
   1. Provide at glazed entrances, including glazed doors, sidelites, and transoms.
   2. Basis-of-design:
      a. 3M Scotchshield Safety & Security Window Film Ultra S800.
      b. 3M Impact Protection Profile Attachment System.

2.03 MATERIALS

A. Accessory Materials: As recommended or required by film manufacturer.

B. Glass Cleaner: As recommended by glazing film manufacturer.

**PART 3 EXECUTION**

3.01 EXAMINATION

A. Examine glass and frames. Verify that existing conditions are adequate for proper application and performance of film.

B. Verify glass is not cracked, chipped, broken, or damaged.

C. Verify that frames are securely anchored and free of defects.

3.02 PREPARATION

A. Clean glass of dust, dirt, paint, oil, grease, mildew, mold, and other contaminants that would inhibit adhesion.

B. Immediately prior to applying film, thoroughly wash glass with neutral cleaning solution.

C. Protect adjacent surfaces.

D. Do not begin installation until substrates have been properly prepared.

3.03 INSTALLATION

A. Install in accordance with manufacturer's instructions, without air bubbles, wrinkles, streaks, bands, thin spots, pinholes, or gaps, as required to achieve specified performance.

B. Accurately cut film with straight edges to required sizes allowing 1/16 inch to 1/8 inch gap at perimeter of glazed panel unless otherwise required by anchorage method.

C. Seams: Seam film only as required to accommodate material sizes; form seams vertically without overlaps and gaps; do not install with horizontal seams.

D. Clean glass and anchoring accessories following installation. Remove excess sealants and other glazing materials from adjacent finished surfaces.

E. Remove labels and protective covers.

3.04 PROTECTION

A. Protect installed products until completion of project.

B. Touch-up, repair or replace damaged products before Date of Substantial Completion.

**END OF SECTION**

NOT FOR BIDDING

# SECTION 090561
# COMMON WORK RESULTS FOR FLOORING PREPARATION

## PART 1 GENERAL

1.01 SECTION INCLUDES

A. This section applies to floors identified in contract documents that are receiving the following types of floor coverings:
   1. Resilient tile and sheet.
   2. Carpet tile.
   3. Thin-set ceramic tile and porcelain tile.
   4. Terrazzo tile.

B. Preparation of new concrete floor slabs for installation of floor coverings.

C. Testing of concrete floor slabs for moisture and alkalinity (pH).

D. Remediation of concrete floor slabs due to unsatisfactory moisture or alkalinity (pH) conditions.
   1. Contractor shall perform all specified remediation of concrete floor slabs. If such remediation is indicated by testing agency's report and is due to a condition not under Contractor's control or could not have been predicted by examination prior to entering into the contract, a contract modification will be issued.

E. Patching compound.

F. Remedial floor coatings.

1.02 RELATED REQUIREMENTS

A. Section 033000 - Cast-in-Place Concrete: Limitations on curing requirements for new concrete floor slabs.

1.03 PRICE AND PAYMENT PROCEDURES

A. Unit Price for Remedial Floor Coating or Sheet Membrane: Do not include the cost of the floor coating or underlayment in the base bid; state on the bid form the unit price per square foot for the floor coating or underlayment, installed, in the event such remediation is required.
   1. Base the unit price on the assumption that the floor area to be treated is primarily open, not divided into rooms and corridors.
   2. Base the unit price on a total quantity of 10,000 square feet.

1.04 REFERENCE STANDARDS

A. ASTM C109/C109M - Standard Test Method for Compressive Strength of Hydraulic Cement Mortars (Using 2-in. or (50-mm) Cube Specimens); 2016a.

B. ASTM C472 - Standard Test Methods for Physical Testing of Gypsum, Gypsum Plasters and Gypsum Concrete; 1999 (Reapproved 2014).

C. ASTM F710 - Standard Practice for Preparing Concrete Floors to Receive Resilient Flooring; 2011.

D. ASTM F1869 - Standard Test Method for Measuring Moisture Vapor Emission Rate of Concrete Subfloor Using Anhydrous Calcium Chloride; 2011.

E. ASTM F2170 - Standard Test Method for Determining Relative Humidity in Concrete Floor Slabs Using in situ Probes; 2016a.

NOT FOR BIDDING

1.05 ADMINISTRATIVE REQUIREMENTS

A. Coordinate scheduling of cleaning and testing, so that preliminary cleaning has been completed for at least 24 hours prior to testing.

1.06 SUBMITTALS

A. Floor Covering and Adhesive Manufacturers' Product Literature: For each specific combination of substrate, floor covering, and adhesive to be used; showing:
   1. Moisture and alkalinity (pH) limits and test methods.
   2. Manufacturer's required bond/compatibility test procedure.

B. Remedial Materials Product Data: Manufacturer's published data on each product to be used for remediation.
   1. Manufacturer's qualification statement.
   2. Manufacturer's statement of compatibility with types of flooring applied over remedial product.
   3. Test reports indicating compliance with specified performance requirements, performed by nationally recognized independent testing agency.
   4. Manufacturer's installation instructions.
   5. Specimen Warranty: Copy of warranty to be issued by coating manufacturer and certificate of underwriter's coverage of warranty.

C. Testing Agency's Report:
   1. Description of areas tested; include floor plans and photographs if helpful.
   2. Summary of conditions encountered.
   3. Moisture and alkalinity (pH) test reports.
   4. Copies of specified test methods.
   5. Recommendations for remediation of unsatisfactory surfaces.
   6. Submit report to Architect.
   7. Submit report not more than two business days after conclusion of testing.

D. Adhesive Bond and Compatibility Test Report.

1.07 QUALITY ASSURANCE

A. Moisture and alkalinity (pH) testing shall be performed by an independent testing agency employed and paid by Contractor.

B. Testing Agency Qualifications: Independent testing agency experienced in the types of testing specified.
   1. Submit evidence of experience consisting of at least 3 test reports of the type required, with project Owner's project contact information.

C. Contractor's Responsibility Relating to Independent Agency Testing:
   1. Provide access for and cooperate with testing agency.
   2. Confirm date of start of testing at least 10 days prior to actual start.
   3. Allow at least 4 business days on site for testing agency activities.
   4. Achieve and maintain specified ambient conditions.
   5. Notify Architect when specified ambient conditions have been achieved and when testing will start.

D. Remedial Coating Installer Qualifications: Company specializing in performing work of the type specified in this section, trained by or employed by coating manufacturer, and able to provide at least 3 project references showing at least 3 years' experience installing moisture emission coatings.

NOT FOR BIDDING

1.08 DELIVERY, STORAGE, AND HANDLING

A. Deliver, store, handle, and protect products in accordance with manufacturer's instructions and recommendations.

B. Deliver materials in manufacturer's packaging; include installation instructions.

C. Keep materials from freezing.

1.09 FIELD CONDITIONS

A. Maintain ambient temperature in spaces where concrete testing is being performed, and for at least 48 hours prior to testing, at not less than 65 degrees F or more than 85 degrees F.

B. Maintain relative humidity in spaces where concrete testing is being performed, and for at least 48 hours prior to testing, at not less than 40 percent and not more than 60 percent.

**PART 2 PRODUCTS**

2.01 MATERIALS

A. Patching Compound: Floor covering manufacturer's recommended product, suitable for conditions, and compatible with adhesive and floor covering. In the absence of any recommendation from flooring manufacturer, provide a product with the following characteristics:

1. Cementitious moisture-, mildew-, and alkali-resistant compound, compatible with floor, floor covering, and floor covering adhesive, and capable of being feathered to nothing at edges.
2. Compressive Strength: 3000 psi, minimum, after 28 days, when tested in accordance with ASTM C109/C109M or ASTM C472, whichever is appropriate.

B. Remedial Floor Coating: Single or multi-layer coating or coating/overlay combination intended by its manufacturer to resist water vapor transmission to degree sufficient to meet flooring manufacturer's emission limits, resistant to the level of alkalinity (pH) found, and suitable for adhesion of flooring without further treatment.

1. Thickness: As required for application and in accordance with manufacturer's installation instructions.
2. Products:
   a. Schonox SLG moisture mitigation system.
   b. Substitutions: See Section 016000 - Product Requirements.

**PART 3 EXECUTION**

3.01 CONCRETE SLAB PREPARATION

A. Perform following operations in the order indicated:

1. Preliminary cleaning.
2. Moisture vapor emission tests; 3 tests in the first 1000 square feet and one test in each additional 1000 square feet, unless otherwise indicated or required by flooring manufacturer.
3. Internal relative humidity tests; in same locations as moisture vapor emission tests, unless otherwise indicated.
4. Alkalinity (pH) tests; in same locations as moisture vapor emission tests, unless otherwise indicated.
5. Specified remediation, if required.
6. Patching, smoothing, and leveling, as required.
7. Other preparation specified.
8. Adhesive bond and compatibility test.

NOT FOR BIDDING

9. Protection.

B. Remediations:
   1. Active Water Leaks or Continuing Moisture Migration to Surface of Slab: Correct this condition before doing any other remediation; re-test after correction.
   2. Excessive Moisture Emission or Relative Humidity: If an adhesive that is resistant to the level of moisture present is available and acceptable to flooring manufacturer, use that adhesive for installation of the flooring; if not, apply remedial floor coating or remedial sheet membrane over entire suspect floor area.
   3. Excessive Alkalinity (pH): If remedial floor coating is necessary to address excessive moisture, no additional remediation is required; if not, if an adhesive that is resistant to the level present is available and acceptable to the flooring manufacturer, use that adhesive for installation of the flooring; otherwise, apply a skim coat of specified patching compound over entire suspect floor area.

3.02 PRELIMINARY CLEANING

A. Clean floors of dust, solvents, paint, wax, oil, grease, asphalt, residual adhesive, adhesive removers, film-forming curing compounds, sealing compounds, alkali salts, excessive laitance, mold, mildew, and other materials that might prevent adhesive bond.

B. Do not use solvents or other chemicals for cleaning.

3.03 MOISTURE VAPOR EMISSION TESTING

A. Where the floor covering manufacturer's requirements conflict with either the referenced test method or this specification, comply with the manufacturer's requirements.

B. Where this specification conflicts with the referenced test method, comply with the requirements of this section.

C. Test in accordance with ASTM F1869 and as follows.

D. Plastic sheet test and mat bond test may not be substituted for the specified ASTM test method, as those methods do not quantify the moisture content sufficiently.

E. In the event that test values exceed floor covering manufacturer's limits, perform remediation as indicated. In the absence of manufacturer limits, perform remediation if test values exceed 3 pounds per 1000 square feet per 24 hours.

F. Report: Report the information required by the test method.

3.04 INTERNAL RELATIVE HUMIDITY TESTING

A. Where the floor covering manufacturer's requirements conflict with either the referenced test method or this specification, comply with the manufacturer's requirements.

B. Where this specification conflicts with the referenced test method, comply with the requirements of this section.

C. Test in accordance with ASTM F2170 Procedure A and as follows.

D. Testing with electrical impedance or resistance apparatus may not be substituted for the specified ASTM test method, as the values determined are not comparable to the ASTM test values and do not quantify the moisture content sufficiently.

E. In the event that test values exceed floor covering manufacturer's limits, perform remediation as indicated. In the absence of manufacturer limits, perform remediation if any test value exceeds 75 percent relative humidity.

F. Report: Report the information required by the test method.

NOT FOR BIDDING

3.05 ALKALINITY TESTING

A. Where the floor covering manufacturer's requirements conflict with either the referenced test method or this specification, comply with the manufacturer's requirements.

B. The following procedure is the equivalent of that described in ASTM F710, repeated here for the Contractor's convenience.

1. Use a wide range alkalinity (pH) test paper, its associated chart, and distilled or deionized water.
2. Place several drops of water on a clean surface of concrete, forming a puddle approximately 1 inch in diameter. Allow the puddle to set for approximately 30 seconds, then dip the alkalinity (pH) test paper into the water, remove it, and compare immediately to chart to determine alkalinity (pH) reading.
3. Use of a digital pH meter with probe is acceptable; follow meter manufacturer's instructions.

C. In the event that test values exceed floor covering manufacturer's limits, perform remediation as indicated. In the absence of manufacturer limits, perform remediation if alkalinity (pH) test value is over 10.

3.06 PREPARATION

A. See individual floor covering section(s) for additional requirements.

B. Comply with requirements and recommendations of floor covering manufacturer.

C. Fill and smooth surface cracks, grooves, depressions, control joints and other non-moving joints, and other irregularities with patching compound.

D. Do not fill expansion joints, isolation joints, or other moving joints.

3.07 ADHESIVE BOND AND COMPATIBILITY TESTING

A. Comply with requirements and recommendations of floor covering manufacturer.

3.08 APPLICATION OF REMEDIAL FLOOR COATING

A. Comply with requirements and recommendations of coating manufacturer.

3.09 PROTECTION

A. Cover prepared floors with building paper or other durable covering.

**END OF SECTION**

NOT FOR BIDDING

# SECTION 092116
# GYPSUM BOARD ASSEMBLIES

## PART 1 GENERAL

1.01 SECTION INCLUDES

A. Performance criteria for gypsum board assemblies.

B. Metal stud wall framing.

C. Metal channel ceiling framing.

D. Gypsum sheathing.

E. Cementitious backing board.

F. Gypsum wallboard.

G. Joint treatment and accessories.

1.02 RELATED REQUIREMENTS

A. Section 054000 - Cold-Formed Metal Framing: Exterior wind-load-bearing metal stud framing.

B. Section 061000 - Rough Carpentry: Wood blocking product and execution requirements.

C. Section 072100 - Thermal Insulation: Acoustic insulation.

D. Section 078400 - Firestopping: Top-of-wall assemblies at fire rated walls.

E. Section 079200 - Joint Sealants: Sealing acoustical gaps in construction other than gypsum board or plaster work.

1.03 REFERENCE STANDARDS

A. AISI S100-12 - North American Specification for the Design of Cold-Formed Steel Structural Members; American Iron and Steel Institute; 2012.

B. ANSI A118.9 - American National Standard Specifications for Test Methods and Specifications for Cementitious Backer Units; 1999 (Reaffirmed 2016).

C. ASTM A653/A653M - Standard Specification for Steel Sheet, Zinc-Coated (Galvanized) or Zinc-Iron Alloy-Coated (Galvannealed) by the Hot-Dip Process; 2015.

D. ASTM C475/C475M - Standard Specification for Joint Compound and Joint Tape for Finishing Gypsum Board; 2015.

E. ASTM C645 - Standard Specification for Nonstructural Steel Framing Members; 2014.

F. ASTM C754 - Standard Specification for Installation of Steel Framing Members to Receive Screw-Attached Gypsum Panel Products; 2017.

G. ASTM C840 - Standard Specification for Application and Finishing of Gypsum Board; 2016.

H. ASTM C954 - Standard Specification for Steel Drill Screws for the Application of Gypsum Panel Products or Metal Plaster Bases to Steel Studs From 0.033 in. (0.84 mm) to 0.112 in. (2.84 mm) in Thickness; 2015.

I. ASTM C1002 - Standard Specification for Steel Self-Piercing Tapping Screws for Application of Gypsum Panel Products or Metal Plaster Bases to Wood Studs or Steel Studs; 2016.

J. ASTM C1047 - Standard Specification for Accessories For Gypsum Wallboard and Gypsum Veneer Base; 2014a.

K. ASTM C1177/C1177M - Standard Specification for Glass Mat Gypsum Substrate for Use as Sheathing; 2013.

NOT FOR BIDDING

L. ASTM C1278/C1278M - Standard Specification for Fiber-Reinforced Gypsum Panel; 2007a (Reapproved 2015).

M. ASTM C1280 - Standard Specification for Application of Exterior Gypsum Panel Products for Use as Sheathing; 2013a.

N. ASTM C1325 - Specification for Non-Asbestos Fiber-Mat Reinforced Cementitious Backer Units; 2017.

O. ASTM C1396/C1396M - Standard Specification for Gypsum Board; 2014.

P. ASTM C1629/C1629M - Standard Classification for Abuse-Resistant Nondecorated Interior Gypsum Panel Products and Fiber-Reinforced Cement Panels; 2015.

Q. ASTM C1658/C1658M - Standard Specification for Glass Mat Gypsum Panels; 2015.

R. ASTM D3273 - Standard Test Method for Resistance to Growth of Mold on the Surface of Interior Coatings in an Environmental Chamber; 2016.

S. ASTM E90 - Standard Test Method for Laboratory Measurement of Airborne Sound Transmission Loss of Building Partitions and Elements; 2009 (Reapproved 2016).

T. ASTM E413 - Classification for Rating Sound Insulation; 2016.

U. GA-216 - Application and Finishing of Gypsum Board; 2016.

V. GA-226 - Application of Gypsum Board to Form Curved Surfaces; Gypsum Association; 2016.

W. UL (FRD) - Fire Resistance Directory; current edition.

1.04 SUBMITTALS

A. Product Data: Provide data on metal framing, gypsum board, glass mat faced gypsum board, accessories, and joint finishing system.

B. Product Data: Provide manufacturer's data on partition head to structure connectors, showing compliance with requirements.

C. Test Reports: For stud framing products that do not comply with ASTM C645 or ASTM C754, provide independent laboratory reports showing maximum stud heights at required spacings and deflections.

1.05 QUALITY ASSURANCE

A. Installer Qualifications: Company specializing in performing gypsum board installation and finishing, with minimum five years of documented experience.

**PART 2 PRODUCTS**

2.01 GYPSUM BOARD ASSEMBLIES

A. Provide completed assemblies complying with ASTM C840 and GA-216.
   1. See PART 3 for finishing requirements.

B. Interior Partitions: Provide completed assemblies with the following characteristics:
   1. Acoustic Attenuation: STC as indicated calculated in accordance with ASTM E413, based on tests conducted in accordance with ASTM E90.

C. Shaft Walls at HVAC Shafts: Provide completed assemblies with the following characteristics:
   1. Air Pressure Within Shaft: Sustained loads of 5 lbf/sq ft with maximum mid-span deflection of L/240.
   2. Acoustic Attenuation: STC of 35-39 calculated in accordance with ASTM E413, based on tests conducted in accordance with ASTM E90.

NOT FOR BIDDING

D. Fire Rated Assemblies: Provide completed assemblies with the following characteristics:
   1. UL Assembly Numbers: Provide construction equivalent to that listed for the particular assembly in the current UL (FRD).
      a. Refer to Drawings for UL Assembly Numbers.

2.02 METAL FRAMING MATERIALS

A. Manufacturers - Metal Framing, Connectors, and Accessories:
   1. Clarkwestern Dietrich Building Systems LLC: www.clarkdietrich.com.
   2. Marino: www.marinoware.com.
   3. Substitutions: See Section 016000 - Product Requirements.

B. Non-Loadbearing Framing System Components: ASTM C645; galvanized sheet steel, of size and properties necessary to comply with ASTM C754 for the spacing indicated, with maximum deflection of wall framing of L/240 at 5 psf.
   1. Steel Sheet Components: Comply with ASTM A1003 requirements for metal unless otherwise indicated.
   2. Protective coating: ASTM A653/A653M G40 hot-dip galvanized unless otherwise noted.
   3. Studs: "C" shaped with flat or formed webs with reinforcing ribs.
      a. Minimum Base-Metal Thickness: 0.019 inches (20 ga equivalent), in addition to the minimum thickness required by performance requirements for horizontal deflection.
      b. Depth: As indicated on Drawings.
   4. Ceiling Channels: C-shaped.
   5. Furring: Hat-shaped sections, minimum depth of 7/8 inch.

C. Loadbearing Studs for Application of Gypsum Board: As specified in Section 054000.

D. Shaft Wall Studs and Accessories: ASTM C645; galvanized sheet steel, of size and properties necessary to comply with ASTM C754 and specified performance requirements.

E. Ceiling Hangers: Type and size as specified in ASTM C754 for spacing required.

F. Partition Head to Structure Connections: Provide mechanical anchorage devices that accommodate deflection using slotted holes, screws and anti-friction bushings, preventing rotation of studs while maintaining structural performance of partition.
   1. Structural Performance: Maintain lateral load resistance and vertical movement capacity required by applicable code, when evaluated in accordance with AISI S100-12.
   2. Material: ASTM A653/A653M steel sheet, SS Grade 50/340, with G60/Z180 hot dipped galvanized coating.
   3. Provide components UL-listed for use in UL-listed fire-rated head of partition joint systems specified in Section 078400.
   4. Provide mechanical anchorage devices as described above that accommodate deflection while maintaining the fire-rating of the wall assembly.

G. Grid Suspension Systems: Steel grid system of main tees and support bars connected to structure using hanging wire.
   1. Products:
      a. USG Corporation; Drywall Suspension System: www.usg.com/#sle.
      b. Substitutions: See Section 016000 - Product Requirements.

2.03 BOARD MATERIALS

A. Manufacturers - Gypsum-Based Board:
   1. CertainTeed Corporation: www.certainteed.com.
   2. Georgia-Pacific Gypsum: www.gpgypsum.com.

NOT FOR BIDDING

3. National Gypsum Company: www.nationalgypsum.com/#sle.
4. USG Corporation: www.usg.com.
5. Substitutions: See Section 016000 - Product Requirements.

B. Gypsum Wallboard: Paper-faced gypsum panels as defined in ASTM C1396/C1396M; sizes to minimize joints in place; ends square cut.
1. Application: Use for vertical surfaces and ceilings, 8'-0" and higher, unless otherwise indicated. Use for inner layer of multi-layer applications, unless otherwise indicated.
2. Mold Resistance: Score of 10, when tested in accordance with ASTM D3273.
   a. Mold resistant board is required at all locations.
3. At Assemblies Indicated with Fire-Rating: Use type required by indicated tested assembly; if no tested assembly is indicated, use Type X board, UL or WH listed.
4. Thickness:
   a. Vertical Surfaces: 5/8 inch.
   b. Ceilings: 5/8 inch.
5. Mold Resistant Paper Faced Products:
   a. National Gypsum Company; Gold Bond XP Gypsum Board.
   b. CertainTeed Corporation; ProRoc Brand Moisture & Mold Resistant Gypsum Board..
   c. Lafarge North America Inc; Mold Defense Drywall.
   d. USG Corporation; Sheetrock Brand Mold Tough Gypsum Panels.
   e. Substitutions: See Section 016000 - Product Requirements.

C. Abuse Resistant Wallboard:
1. Application: All locations, 8'-0" and below, except Gymnasium.
2. Surface Abrasion: Level 3, minimum, when tested in accordance with ASTM C1629/C1629M.
3. Indentation: Level 1, minimum, when tested in accordance with ASTM C1629/C1629M.
4. Soft Body Impact: Level 2, minimum, when tested in accordance with ASTM C1629/C1629M.
5. Mold Resistance: Score of 10, when tested in accordance with ASTM D3273.
6. Paper-Faced Type: Gypsum wallboard as defined in ASTM C1396/C1396M.
7. Unfaced Type: Interior fiber-reinforced gypsum panels as defined in ASTM C1278/C1278M.
8. Type: Fire resistance rated Type X, UL or WH listed.
9. Thickness: 5/8 inch.
10. Edges: Tapered.
11. Paper-Faced Products:
    a. CertainTeed Corporation; Extreme Abuse Resistant Drywall with M2Tech.
    b. National Gypsum Company; Gold Bond Hi-Abuse XP Gypsum Board.
    c. USG; Fiberock Aqua-Tough Interior Panel.
    d. Substitutions: See Section 016000 - Product Requirements.

D. Impact Resistant Wallboard:
1. Application: Gypsum board partitions in Gymnasium.
2. Surface Abrasion: Level 3, minimum, when tested in accordance with ASTM C1629/C1629M.
3. Indentation: Level 1, minimum, when tested in accordance with ASTM C1629/C1629M.
4. Soft Body Impact: Level 3, minimum, when tested in accordance with ASTM C1629/C1629M.

NOT FOR BIDDING

5. Hard Body Impact: Level 3, minimum, when tested in accordance with ASTM C1629/C1629M.
6. Mold Resistance: Score of 10, when tested in accordance with ASTM D3273.
7. Paper-Faced Type: Gypsum wallboard as defined in ASTM C1396/C1396M.
8. Unfaced Type: Interior fiber-reinforced gypsum panels as defined in ASTM C1278/C1278M.
9. Type: Fire resistance rated Type X, UL or WH listed.
10. Thickness: 5/8 inch.
11. Edges: Tapered.
12. Paper-Faced Products:
    a. CertainTeed Corporation; Extreme Impact Resistant Drywall with M2Tech.
    b. National Gypsum Company; Gold Bond Hi-Impact XP Gypsum Board.
    c. USG Sheetrock Brand Mold Tough VHI Firecode X Panels.
    d. Substitutions: See Section 016000 - Product Requirements.

E. Backing Board For Wet Areas:
1. Application: Surfaces behind tile in wet areas including shower room tile installations.
2. Application: Exterior soffits where textured acrylic finish systems are indicated.
3. ANSI Cement-Based Board: Non-gypsum-based; aggregate Portland cement panels with glass fiber mesh embedded in front and back surfaces complying with ANSI A118.9 or ASTM C1325.
    a. Thickness: 1/2 inch.
    b. Products:
        1) Custom Building Products; WonderBoard: www.custombuildingproducts.com.
        2) National Gypsum Company; PermaBase Cement Board: www.nationalgypsum.com/#site.
        3) USG Corporation; Durock Brand Cement Board: www.usg.com.
        4) Substitutions: See Section 016000 - Product Requirements.

F. Backing Board For Non-Wet Areas: Water-resistant gypsum backing board as defined in ASTM C1396/C1396M; sizes to minimum joints in place; ends square cut.
1. Application: Vertical surfaces behind thinset tile, except in wet areas.
2. Mold Resistance: Score of 10, when tested in accordance with ASTM D3273.
3. At Assemblies Indicated with Fire-Rating: Use type required by indicated tested assembly; if no tested assembly is indicated, use Type X board, UL or WH listed.
4. Type: Type X, in locations indicated.
5. Type X Thickness: 5/8 inch.
6. Edges: Tapered.
7. Products:
    a. National Gypsum Company; Gold Bond Hi-Abuse XP Gypsum Board.
    b. Georgia-Pacific Gypsum LLC; DensShield Tile Backer..
    c. USG; Fiberock Aqua-Tough Interior Panel..
    d. Substitutions: See Section 016000 - Product Requirements.

G. Exterior Sheathing Board: Sizes to minimize joints in place; ends square cut.
1. Application: Exterior sheathing, unless otherwise indicated.
2. Mold Resistance: Score of 10, when tested in accordance with ASTM D3273.
3. Glass Mat Faced Sheathing: Glass mat faced gypsum substrate as defined in ASTM C1177/C1177M.
4. Core Type: Type X, as indicated.

NOT FOR BIDDING

5. Type X Thickness: 5/8 inch.
6. Edges: Square.
7. Glass Mat Faced Products:
   a. CertainTeed Corporation; GlasRoc Type X Exterior Sheathing.
   b. Georgia-Pacific Gypsum; DensGlass Sheathing.
   c. National Gypsum Company; Gold Bond eXP Sheathing.
   d. Substitutions: See Section 016000 - Product Requirements.

H. Shaftwall and Coreboard: Type X; 1 inch thick by 24 inches wide, tongue-and-groove long edges, ends square cut.
   1. Glass Mat Faced Type: Glass mat shaftliner gypsum panel or glass mat coreboard gypsum panel as defined in ASTM C1658/C1658M.
   2. Mold Resistance: Score of 10, when tested in accordance with ASTM D3273.
   3. Products:
      a. Georgia-Pacific Gypsum; DensGlass Ultra Shaftliner (mold-resistant).
      b. National Gypsum Company; Gold Bond Brand eXP Shaftliner.
      c. USG Corporation; Sheetrock Gypsum Liner Panels--Enhanced (mold-resistant)..
      d. Substitutions: See Section 016000 - Product Requirements.

2.04 ACCESSORIES

A. Acoustic Insulation: As specified in Section 072100.

B. Acoustic Sealant: As specified in Section 072100: Type 5.

C. Finishing Accessories: ASTM C1047, paper-faced galvanized steel, unless noted otherwise.
   1. Types: As detailed or required for finished appearance.

D. Decorative Metal Trim:
   1. Material: Extruded aluminum alloy 6063-T5 temper.
   2. Finish: Anodized, clear.
   3. Type: Profile as selected from manufacturer's standard range.
   4. Reveal Trim:
      a. Shapes and configurations: As indicated on Drawings.
      b. Products:
         1) Fry Reglet Architectural Metals: www.fryreglet.com..
         2) Substitutions: See Section 016000 - Product Requirements.

E. Vertical Closure Between Partitions and Window Mullions: Extruded aluminum partition closures, pre-assembled and spring loaded to provide a tight fit for vertical junctures of partitions and window walls:
   1. Extruded aluminum extrusions: 6063-T5 temper
      a. Finish: Acrylic-Polyester powder coat, as selected from manufacturer's standard colors.
   2. Acoustical insulation: batt, factory-installed.
   3. Manufacturer and Product: Mullion Mate Series 30, Gordon Inc.: www.gordon-inc.com.
   4. Accessories: Provide partition end caps, aluminum extrusions to match partition thickness.

F. Joint Materials: ASTM C475/C475M and as recommended by gypsum board manufacturer for project conditions.
   1. Tape: 2 inch wide, creased paper tape for joints and corners, except as otherwise indicated.
   2. Chemical hardening type compound.

NOT FOR BIDDING

G. High Build Drywall Surfacer: Vinyl acrylic latex-based coating for spray application, designed to take the place of skim coating and separate paint primer in achieving Level 5 finish.
   1. Products:
      a. CertainTeed Corporation; Level V Wall and Ceiling Primer/Surfacer with M2Tech: www.certainteed.com/#sle.
      b. USG Sheetrock Brand Tuff-Hide Primer-Surfacer.
      c. Substitutions: See Section 016000 - Product Requirements.

H. Screws for Fastening of Gypsum Panel Products to Cold-Formed Steel Studs Less than 0.033 inch in Thickness and Wood Members: ASTM C1002; self-piercing tapping screws, corrosion resistant.

I. Screws for Fastening of Gypsum Panel Products to Steel Members from 0.033 to 0.112 inch in Thickness: ASTM C954; steel drill screws, corrosion resistant.

J. Anchorage to Substrate: Tie wire, nails, screws, and other metal supports of type and size to suit application; to rigidly secure materials in place.

**PART 3 EXECUTION**

3.01 EXAMINATION

A. Verify that project conditions are appropriate for work of this section to commence.

3.02 SHAFT WALL INSTALLATION

A. Shaft Wall Framing: Install in accordance with manufacturer's installation instructions.
   1. Fasten runners to structure with short leg to finished side, using appropriate power-driven fasteners at not more than 24 inches on center.
   2. Install studs at spacing required to meet performance requirements.

B. Shaft Wall Liner: Cut panels to accurate dimension and install sequentially between special friction studs.
   1. On walls over sixteen feet high, screw-attach studs to runners top and bottom.
   2. Seal perimeter of shaft wall and penetrations with acoustical sealant.

3.03 FRAMING INSTALLATION

A. Metal Framing: Install in accordance with ASTM C754 and manufacturer's instructions.

B. Suspended Ceilings and Soffits: Space framing and furring members at 16 inches on center.
   1. Level ceiling system to a tolerance of 1/1200.
   2. Laterally brace entire suspension system.

C. Studs: Space studs as required by performance requirements for horizontal deflection, 16 inches on center maximum.
   1. Extend partition framing to underside of structure as indicated.
   2. Partitions Terminating at Structure: Attach top runner to structure, maintain clearance between top of studs and structure, and connect studs to track using specified mechanical devices in accordance with manufacturer's instructions; verify free movement of top of stud connections; do not leave studs unattached to track.

D. Openings: Reinforce openings as required for weight of doors or operable panels, using not less than double studs at jambs.

E. Standard Wall Furring: Install at concrete and masonry walls scheduled to receive gypsum board, not more than 4 inches from floor and ceiling lines and abutting walls. Secure in place on alternate channel flanges at maximum 24 inches on center.
   1. Orientation: Horizontal.

NOT FOR BIDDING

2. Spacing: At 16 inches on center.

F. Acoustic Furring: Where indicated, install resilient sound isolation clips at maximum 24 inches on center, and in accordance with manufacturer's instructions. Locate joints over framing members.

G. Blocking: Install wood blocking for support of:
1. Framed openings.
2. Wall mounted cabinets.
3. Plumbing fixtures.
4. Toilet partitions.
5. Toilet accessories.
6. Wall mounted door hardware, including wall stops.
7. Handrails and wall brackets.
8. Display cases, markerboards, tack boards.
9. TV and monitor mounts.

3.04 ACOUSTIC ACCESSORIES INSTALLATION

A. Acoustic Insulation: Place tightly within spaces, around cut openings, behind and around electrical and mechanical items within partitions, and tight to items passing through partitions.

B. Acoustic Sealant: Install in accordance with manufacturer's instructions.
1. Place two beads continuously on substrate before installation of perimeter framing members.
2. Place continuous bead at perimeter of each layer of gypsum board.
3. Seal around all penetrations by conduit, pipe, ducts, and rough-in boxes, except where firestopping is provided.

3.05 BOARD INSTALLATION

A. Comply with ASTM C840, GA-216, and manufacturer's instructions. Install to minimize butt end joints, especially in highly visible locations.

B. Single-Layer Non-Rated: Install gypsum board parallel to framing, with ends and edges occurring over firm bearing.

C. Double-Layer Non-Rated: Use gypsum board for first layer, placed perpendicular to framing or furring members, with ends and edges occurring over firm bearing. Place second layer parallel to framing or furring members. Offset joints of second layer from joints of first layer.

D. Fire-Rated Construction: Install gypsum board in strict compliance with requirements of assembly listing.

E. Exterior Sheathing: Comply with ASTM C1280. Install sheathing vertically, with edges butted tight and ends occurring over firm bearing.
1. Seal joints, cut edges, and holes with water-resistant sealant.

F. Exterior Soffits: Install cementitious backing boards perpendicular to framing, with staggered end joints over framing members or other solid backing.
1. Seal joints, cut edges, and holes with water resistant sealant.

G. Cementitious Backing Board: Install over steel framing members where indicated, in accordance with ANSI A108.11-SystemDeleted and manufacturer's instructions.

H. Installation on Metal Framing: Use screws for attachment of gypsum board.

I. Curved Surfaces: Apply gypsum board to curved substrates in accordance with GA-226.

NOT FOR BIDDING

3.06 INSTALLATION OF TRIM AND ACCESSORIES

A. Control Joints: Place control joints consistent with lines of building spaces and as indicated.
   1. Not more than 30 feet apart on walls and ceilings over 50 feet long.

B. Corner Beads: Install at external corners, using longest practical lengths.

C. Edge Trim: Install at locations where gypsum board abuts dissimilar materials.

D. Decorative Trim: Install at locations shown on drawings and in accordance with manufacturer's instructions.

E. Exterior Soffit Vents: Install according to manufacturer's written instructions and in locations indicated on the drawings. Provide vent area specified.

3.07 JOINT TREATMENT

A. Glass Mat Faced Gypsum Board and Exterior Glass Mat Faced Sheathing: Use fiberglass joint tape, bedded and finished with chemical hardening type joint compound.

B. Paper Faced Gypsum Board: Use paper or fiberglass joint tape, bedded with chemical hardening type joint compound and finished with chemical hardening type joint compound.

C. Finish gypsum board in accordance with levels defined in ASTM C840, as follows:
   1. Level 5: Walls and ceilings to receive paint finish or wall coverings, in the following locations:
      a. Lobby
      b. Auditorium Lobby
      c. Auditorium
   2. Level 4: Walls and ceilings to receive paint finish or wall coverings, unless otherwise indicated.
   3. Level 2: In utility areas, behind cabinetry, and on backing board to receive tile finish.
   4. Level 1: Fire rated wall areas above finished ceilings, whether or not accessible in the completed construction.

D. Tape, fill, and sand exposed joints, edges, and corners to produce smooth surface ready to receive finishes.
   1. Feather coats of joint compound so that camber is maximum 1/32 inch.
   2. Taping, filling and sanding is not required at base layer of double layer applications.

E. Where Level 5 finish is indicated, spray apply high build drywall surfacer over entire surface after joints have been properly treated; achieve a flat and tool mark-free finish.

3.08 TOLERANCES

A. Maximum Variation of Finished Gypsum Board Surface from True Flatness: 1/8 inch in 10 feet in any direction.

**END OF SECTION**

NOT FOR BIDDING

# SECTION 093000
# TILING

## PART 1 GENERAL

1.01 SECTION INCLUDES

A. Tile for floor applications.

B. Tile for wall applications.

C. Tile for showers.

D. Cementitious backer board as tile substrate.

E. Stone thresholds.

F. Non-ceramic trim.

1.02 RELATED REQUIREMENTS

A. Section 079200 - Joint Sealants: Sealing joints between tile work and adjacent construction and fixtures.

B. Section 090561 - Common Work Results for Flooring Preparation.

C. Section 092116 - Gypsum Board Assemblies: Installation of tile backer board.

D. Section 096633 - Cement Terrazzo Tiles to be installed using thinset tile method.

1.03 PRICE AND PAYMENT PROCEDURES

A. See Section 012300 - Alternates, for alternates affecting the work of this section.

1.04 REFERENCE STANDARDS

A. ANSI A108/A118/A136 - American National Standard Specifications for the Installation of Ceramic Tile (Compendium); 2017.

B. ANSI A108.1a - American National Standard Specifications for Installation of Ceramic Tile in the Wet-Set Method, with Portland Cement Mortar; 2014.

C. ANSI A108.1b - American National Standard Specifications for Installation of Ceramic Tile on a Cured Portland Cement Mortar Setting Bed with Dry-Set or Latex-Portland Cement Mortar; 1999 (Reaffirmed 2010).

D. ANSI A108.1c - Specifications for Contractors Option: Installation of Ceramic Tile in the Wet-Set Method with Portland Cement Mortar or Installation of Ceramic Tile on a Cured Portland Cement Mortar Bed with Dry-Set or Latex-Portland Cement; 1999 (Reaffirmed 2010).

E. ANSI A108.4 - American National Standard Specifications for Installation of Ceramic Tile with Organic Adhesives or Water Cleanable Tile-Setting Epoxy Adhesive; 2009 (Revised).

F. ANSI A108.5 - American National Standard Specifications for Installation of Ceramic Tile with Dry-Set Portland Cement Mortar or Latex-Portland Cement Mortar; 1999 (Reaffirmed 2010).

G. ANSI A108.6 - American National Standard Specifications for Installation of Ceramic Tile with Chemical Resistant, Water Cleanable Tile-Setting and -Grouting Epoxy; 1999 (Reaffirmed 2010).

H. ANSI A108.8 - American National Standard Specifications for Installation of Ceramic Tile with Chemical Resistant Furan Resin Mortar and Grout; 1999 (Reaffirmed 2010).

I. ANSI A108.9 - American National Standard Specifications for Installation of Ceramic Tile with Modified Epoxy Emulsion Mortar/Grout; 1999 (Reaffirmed 2010).

NOT FOR BIDDING

J. ANSI A108.10 - American National Standard Specifications for Installation of Grout in Tilework; 1999 (Reaffirmed 2010).

K. ANSI A108.11 - American National Standard Specifications for Interior Installation of Cementitious Backer Units; 2010 (Reaffirmed 2016).

L. ANSI A108.12 - American National Standard for Installation of Ceramic Tile with EGP (Exterior glue plywood) Latex-Portland Cement Mortar; 1999 (Reaffirmed 2010).

M. ANSI A108.13 - American National Standard for Installation of Load Bearing, Bonded, Waterproof Membranes for Thin-Set Ceramic Tile and Dimension Stone; 2005 (Reaffirmed 2010).

N. ANSI A118.7 - American National Standard Specifications for High Performance Cement Grouts for Tile Installation; 2010 (Revised).

O. ANSI A118.15 - American National Standard Specifications for Improved Modified Dry-Set Cement Mortar ; 2012.

P. ANSI A137.1 - American National Standard Specifications for Ceramic Tile; 2013.1.

Q. TCNA (HB) - Handbook for Ceramic, Glass, and Stone Tile Installation; 2015.

1.05 ADMINISTRATIVE REQUIREMENTS

A. Preinstallation Meeting: Convene a preinstallation meeting one week before starting work of this section; require attendance by affected installers.

1.06 SUBMITTALS

A. Product Data: Provide manufacturers' data sheets on tile, mortar, grout, and accessories. Include instructions for using grouts and adhesives.

B. Shop Drawings: Indicate tile layout, patterns, color arrangement, perimeter conditions, junctions with dissimilar materials, control and expansion joints, thresholds, ceramic accessories, and setting details.

C. Samples: Mount tile and apply grout on two plywood panels, minimum 18 by 18 inches in size illustrating pattern, color variations, and grout joint size variations.

D. Maintenance Data: Include recommended cleaning methods, cleaning materials, and stain removal methods.

1.07 QUALITY ASSURANCE

A. Maintain one copy of and ANSI A108/A118/A136 and TCNA (HB) on site.

B. Manufacturer Qualifications: Company specializing in manufacturing the types of products specified in this section, with minimum five years of documented experience.

C. Installer Qualifications:
   1. Company specializing in performing tile installation, with minimum of five years of documented experience.

1.08 MOCK-UP

A. See Section 014000 - Quality Requirements, for general requirements for mock-up.

B. Construct tile mock-up where indicated on drawings, incorporating all components specified for the location.
   1. Minimum size of mock-up is indicated on drawings.
   2. Approved mock-up may remain as part of the Work.

NOT FOR BIDDING

1.09 DELIVERY, STORAGE, AND HANDLING

A. Protect adhesives from freezing or overheating in accordance with manufacturer's instructions.

1.10 FIELD CONDITIONS

A. Do not install solvent-based products in an unventilated environment.

B. Maintain ambient and substrate temperature of 50 degrees F during installation of mortar materials.

**PART 2 PRODUCTS**

2.01 TILE

A. Porcelain Mosaic Tile, Type MFT-1: ANSI A137.1, standard grade.
   1. Size: 2 by 2 inch, nominal.
   2. Surface Finish: Unglazed.
   3. Color(s): As indicated on drawings.
   4. Products:
      a. Dal-Tile Corporation; Keystones: www.daltile.com/#sle.

B. Porcelain Floor Tile, Type PFT-1: ANSI A137.1, standard grade.
   1. Size: 12 by 24 inch, nominal.
   2. Thickness: 5/16 inch, nominal.
   3. Surface Finish: Unglazed.
   4. Color(s): As indicated on drawings.
   5. Trim Units: Matching bullnose, double bullnose, cove base, and cove shapes in sizes coordinated with field tile.
   6. Products:
      a. Dal-Tile Corporation; Volume 1.0: www.daltile.com/#sle.

C. Porcelain Floor Tile, Type PFT-1: ANSI A137.1, standard grade.
   1. Size: 12 by 24 inch, nominal.
   2. Thickness: 5/16 inch, nominal.
   3. Surface Finish: Unglazed.
   4. Color(s): As indicated on drawings.
   5. Trim Units: Matching bullnose, double bullnose, cove base, and cove shapes in sizes coordinated with field tile.
   6. Products:
      Dal-Tile Corporation; Volume 1.0: www.daltile.com/#sle.

D.

E. Porcelain Wall Tile, Type PWT-1: ANSI A137.1, standard grade.
   1. Sizes: as indicated on drawings.
   2. Surface Finish: Unpolished.
   3. Color(s): As indicated on drawings.
   4. Trim Units: Matching bullnose and cove shapes in sizes coordinated with field tile.
   5. Products: Basis of Design: Garden State Tile.
      a. Sands.

F. Porcelain Wall and Floor Tile, Type [PWT-2, PWT-3, PWT-4]: ANSI A137.1, standard grade.
   1. Sizes: as indicated on drawings.
   2. Thickness: 5/16"
   3. Surface Finish: Unpolished

NOT FOR BIDDING

4. Color(s): As indicated on drawings.
5. Trim Units: Matching bullnose and cove shapes in sizes coordinated with field tile.
6. Products: Basis of Design: Daltile.
   a. Volume 1.0.

G. Porcelain Wall and Floor Tile, Type [PWT-5]: ANSI A137.1, standard grade.
1. Sizes: as indicated on drawings.
2. Thickness: 5/16"
3. Surface Finish: Unpolished
4. Color(s): As indicated on drawings.
5. Products: Basis of Design: Daltile.
   a. Multitude.

H. Ceramic Wall Tile [CWT-1]
1. Size: 4 X 12 inch nominal
2. Thickness: 3/8 inch
3. Color(s): As indicated on drawings
4. Product: Basis of Design: Daltile Colorwheel Collection - Linear
   a. Finish: Light Polished

I. Ceramic Wall Tile [CWT-2]
1. Size: 8 X 24 inch nominal
2. Thickness: 3/8 inch
3. Color(s): As indicated on drawings
4. Product: Basis of Design: Daltile Colorwheel Collection - Linear
   a. Finish: Light Polished

2.02 TRIM AND ACCESSORIES

A. Non-Ceramic Trim: Brushed stainless steel, style and dimensions to suit application, for setting using tile mortar or adhesive.
1. Basis of Design: Schluter-Systems: www.schluter.com
   a. RONDEC
      1) Brushed Stainless Steel
      2) Finish cap and end trim
2. Applications:
   a. Inside corners
   b. Outside corners
   c. Top edge

B. Thresholds: Marble, white or gray, honed finish; width as shown by full width of wall or frame opening; 3/4 inch thick; beveled one long edge with radiused corners on top side; without holes, cracks, or open seams.

2.03 SETTING MATERIALS

A. Latex -Portland Cement (LHT) Large and Heavy Tile Mortar : ANSI A118.4/118.15.
1. Applications: Use this type of bond coat where indicated with tiles with facial dimension of 15” or greater.
2. Products:
   a. Custom Building Products; Pro-Lite Premium LHT Mortar.
   b. Custom Building Products; MegsLite Crack Prevention Mortar.
   c. Mapei, Ultraflex 3.

NOT FOR BIDDING

## 2.04 MORTAR BED MATERIALS

A. Mortar Bed Materials: Packaged Portland cement mix , sand, latex additive, and water.
   1. Products:
      a. Custom Building Products; Thick Bed Mortar.
         www.custombuildingproducts.com
      b. Mapei; Modified Mud Bed/ Mud Bed Mix
      c. Substitutions: See Section 016000 - Product Requirements.

## 2.05 GROUTS

A. High Performance Grout: ANSI A118.7 polymer modified cement grout.
   1. Applications: Use this type of grout where indicated and where no other type of grout is indicated.
   2. Use sanded grout for joints 1/8 inch wide and larger; use unsanded grout for joints less than 1/8 inch wide.
   3. Color(s): As selected by Architect from manufacturer's full line.
   4. Products:
      a. Custom Building Products; Prism Color Consistent Grout.
      b. Mapei; Ultracolor Plus

## 2.06 MAINTENANCE MATERIALS

A. Tile Sealant: 100% Silicone Caulk complying with ASTM C920, Class 25, moisture and mildew resistant type.
   1. Applications: Between tile and plumbing fixtures; at control joints.
   2. Color(s): As selected by Architect from manufacturer's full line.
   3. Products:
      a. Custom Building Products 100 Silicone Caulk.
      b. Approved equal product.

B. Grout Sealant: Manufacturer's standard product for sealing grout joints that does not change color or appearance of grout.
   1. Products:
      a. Bonsal, W.R., Company; Grout Sealer.
      b. Bostik; CeramaSeal Grout Sealer.
      c. C-Cure; Penetrating Sealer 978.
      d. MAPEI Corporation; KER 003, Silicone Spray Sealer for Cementitious Tile Grout.
      e. Summitville Tiles, Inc.; SL-15, Invisible Seal Penetrating Grout and Tile Sealer.
      f. TEC Specialty Products Inc.; TA-256 Penetrating Silicone Grout Sealer."
      g. Aqua Mix; Sealers Choice Gold.

## 2.07 ACCESSORY MATERIALS

A. Premium Latex Based Waterproofing and Crack Isolation Membrane; fast setting, flexible, thin, load-bearing, waterproofing membrane system consisting of a premixed, quick-drying liquid latex, complying with ANSI A118.10 and ANSI A118.12; and having IAMPO certification as a shower pan liner.
   1. Products:
      a. MAPEI, "AquaDefense".
      b. Custom Building Products; Red Gard.

NOT FOR BIDDING

**PART 3 EXECUTION**

3.01 EXAMINATION

A. Verify that sub-floor surfaces are smooth and flat within the tolerances specified for that type of work and are ready to receive tile.

B. Verify that wall surfaces are smooth and flat within the tolerances specified for that type of work, are dust-free, and are ready to receive tile.

C. Verify that sub-floor surfaces are dust-free and free of substances that could impair bonding of setting materials to sub-floor surfaces.

D. Cementitious Subfloor Surfaces: Verify that substrates are ready for tiling installation by testing for moisture and alkalinity (pH).
   1. Test in accordance with Section 090561.
   2. Obtain instructions if test results are not within limits recommended by tiling material manufacturer and setting material manufacturer.

E. Verify that required floor-mounted utilities are in correct location.

3.02 PREPARATION

A. Protect surrounding work from damage.

B. Vacuum clean surfaces and damp clean.

C. Seal substrate surface cracks with filler.

3.03 INSTALLATION - GENERAL

A. Install tile and thresholds and grout in accordance with applicable requirements of ANSI A108.1a through ANSI A108.13, manufacturer's instructions, and TCNA (HB) recommendations.

B. Lay tile to pattern indicated. Do not interrupt tile pattern through openings.

C. Cut and fit tile to penetrations through tile, leaving sealant joint space. Form corners and bases neatly. Align floor joints.

D. Place tile joints uniform in width, subject to variance in tolerance allowed in tile size. Make grout joints without voids, cracks, excess mortar or excess grout, or too little grout.

E. Form internal angles square and external angles bullnosed.

F. Install non-ceramic trim in accordance with manufacturer's instructions.

G. Install thresholds where indicated.

H. Sound tile after setting. Replace hollow sounding units.

I. Keep control and expansion joints free of mortar, grout, and adhesive.

J. Prior to grouting, allow installation to completely cure; minimum of 48 hours.

K. Grout tile joints unless otherwise indicated. Use standard grout unless otherwise indicated.

L. At changes in plane and tile-to-tile control joints, use tile sealant instead of grout, with either bond breaker tape or backer rod as appropriate to prevent three-sided bonding.

3.04 INSTALLATION - FLOORS - THIN-SET METHODS

A. Over interior concrete substrates, install in accordance with The Tile Council of North America Handbook Method F122 and F-122A, with Latex/Polymer Modified Portland Cement Mortar and Polymer Modified Tile grout, unless otherwise indicated.

B. Waterproofing Membrane: Install as recommended by manufacturer.

NOT FOR BIDDING

3.05 INSTALLATION - FLOORS - MORTAR BED METHODS

A. Over interior concrete substrates for shower areas, install in accordance with TCNA (HB) Method F121, with latex/polymer modified portland cement mortar and polymer modified grout.

B. Waterproofing Membrane: Install as recommended by manufacturer .

C. Mortar Bed Thickness: 1-1/4 inch, unless otherwise indicated.

3.06 INSTALLATION - SHOWER WALLS

A. At tiled walls install in accordance with The Tile Council of North America Handbook Method B415, mortar bed floor, and W244, thin-set over cementitious backer unit walls.

B. Grout with polymer-modified grout.

3.07 INSTALLATION - WALL TILE

A. Over coated glass mat backer board on studs, install in accordance with TCNA (HB) Method W245, with latex/polymer modified portland cement mortar and polymer modified grout.

1. Extend waterproof membrane 18 inches high at base of walls in toilet and locker rooms.

B. Over interior concrete and masonry install in accordance with TCNA (HB) Method W202, with latex/polymer modified portland cement mortar and polymer modified grout.

1. Extend waterproof membrane 18 inches high at base of walls in toilet and locker rooms.

3.08 GROUTING

A. Follow grout manufacturer's recommendations as to grouting procedures and precautions.

B. Remove all grout haze, observing both tile and grout manufacturer's recommendations as to use of acid and chemical cleaners.

C. Rinse tile work thoroughly with clear water before and after chemical cleaners.

D. Polish surface of tile work with soft cloth.

3.09 PROTECTION, CLEANING AND GROUT SEALING

A. Do not permit traffic over finished floor surface for 4 days after installation.

B. Apply to clean, completed tile walls and floors a protective coat of neutral cleaner solution, 1 part cleaner to 1 part water.

C. Cover tile floors with heavy-duty, non-staining construction paper, masked in place.

D. Prior to final acceptance of tile work, remove paper and rinse protective coat of neutral cleaner from all the surfaces.

E. Clean tile and grout surfaces.

F. Apply grout sealant according to manufacturer's directions.

**END OF SECTION**

NOT FOR BIDDING

# SECTION 095100
# ACOUSTICAL CEILINGS

## PART 1 GENERAL

1.01 SECTION INCLUDES

A. Suspended metal grid ceiling system.

B. Acoustical units.

C. Accessories

1.02 RELATED REQUIREMENTS

A. Section 07 9200 - Joint Sealants: Acoustical sealant.

B. Section 211300 - Fire-Suppression Sprinkler Systems: Sprinkler heads in ceiling system.

C. Section 233700 - Air Outlets and Inlets: Air diffusion devices in ceiling.

D. Section 265100 - Interior Lighting: Light fixtures in ceiling system.

E. Section 275116 - Public Address Systems: Speakers in ceiling system.

F. Section 284600 - Fire Detection and Alarm: Fire alarm components in ceiling system.

1.03 REFERENCE STANDARDS

A. ASTM C635/C635M - Standard Specification for the Manufacture, Performance, and Testing of Metal Suspension Systems for Acoustical Tile and Lay-in Panel Ceilings; 2013a.

B. ASTM C636/C636M - Standard Practice for Installation of Metal Ceiling Suspension Systems for Acoustical Tile and Lay-In Panels; 2013.

C. ASTM E580/E580M - Standard Practice for Installation of Ceiling Suspension Systems for Acoustical Tile and Lay-in Panels in Areas Subject to Earthquake Ground Motions; 2014.

D. ASTM E1264 - Standard Classification for Acoustical Ceiling Products; 2014.

E. ASTM E1264 - Standard Classification for Acoustical Ceiling Products; 2014.

1.04 ADMINISTRATIVE REQUIREMENTS

A. Sequence work to ensure acoustical ceilings are not installed until building is enclosed, sufficient heat is provided, dust generating activities have terminated, and overhead work is completed, tested, and approved.

B. Do not install acoustical units until after interior wet work is dry.

1.05 SUBMITTALS

A. See Section 013000 - Administrative Requirements, for submittal procedures.

B. Product Data: Provide data on suspension system components, acoustical units, and other related components.

C. Samples: Submit two samples 12 x 12 inch (305 x 305 mm) or of size illustrating material and finish of acoustical units.

D. Manufacturer's Installation Instructions: Indicate special procedures, perimeter conditions requiring special attention, and related work.

E. Maintenance Materials: Furnish the following for Owner's use in maintenance of project.

1. See Section 016000 - Product Requirements, for additional provisions.
2. Extra Acoustical Units: 100 sq ft of each type and size.

NOT FOR BIDDING

1.06 QUALITY ASSURANCE

A. Suspension System Manufacturer Qualifications: Company specializing in manufacturing the products specified in this section with minimum three years documented experience.

B. Acoustical Unit Manufacturer Qualifications: Company specializing in manufacturing the products specified in this section with minimum three years documented experience.

1.07 FIELD CONDITIONS

A. Maintain uniform temperature of minimum 60 degrees F, and maximum humidity of 40 percent prior to, during, and after acoustical unit installation.

1.08 PROJECT CONDITIONS

A. Sequence work to ensure acoustical ceilings are not installed until building is enclosed, sufficient heat is provided, dust generating activities have terminated, and overhead work is completed, tested, and approved.

B. Install acoustical units after interior wet work is dry.

**PART 2 PRODUCTS**

2.01 MANUFACTURERS

A. Acoustic Tiles/Panels:
   1. Armstrong World Industries, Inc: www.armstrong.com.
   2. CertainTeed Corporation: www.certainteed.com.
   3. USG: www.usg.com.
   4. Substitutions: See Section 016000 - Product Requirements.

B. Suspension Systems:
   1. Same as for acoustical units.
   2. Substitutions: See Section 016000 - Product Requirements.

2.02 ACOUSTICAL UNITS

A. Acoustical Units - General: ASTM E1264, Class A.

B. Acoustical Panel Type 1: Painted mineral fiber, ASTM E1264 Type III, with the following characteristics:
   1. Size: 24 by 24 inches.
   2. Thickness: 3/4 inches.
   3. Composition: Wet formed.
   4. NRC Range:.70 , determined as specified in ASTM E 1264.
   5. Ceiling Attenuation Class (CAC): 35, determined as specified in ASTM E1264.
   6. Edge: Square.
   7. Surface Color: White.
   8. Suspension System: Exposed grid Type 1.
   9. Products:
      a. USG - Radar ClimaPlus High NRC/CAC Item No. 22521.
      b. Armstrong Fine Fissured 1713.
      c. Substitutions: See Section 016000 - Product Requirements.
   10. Location: Classrooms and Offices- typical, unless otherwise noted

C. Acoustical Panels Type 2: Painted mineral fiber, ASTM E 1264 Type 1 with the following characteristics:
   1. Size: 24 by 24 inches.
   2. Thickness: 5/8 inches.

NOT FOR BIDDING

3. Composition: Wet formed.
4. NRC Range:.50 to.60, determined as specified in ASTM E1264.
5. Ceiling Attenuation Class (CAC): 38, determined as specified in ASTM E1264.
6. Edge: Square.
7. Surface Color: White.
8. Surface Pattern: fine texture.
9. Product:
   a. Armstrong Dune 1772.
   b. USG Olympia 4211.
10. Suspension System: Exposed grid Type 1 .
11. Location: Student corridors, other areas as noted.

D. Acoustical Panels Type 2A: Painted mineral fiber, ASTM E 1264 Type 1 with the following characteristics:
1. Size: 24 by 24 inches.
2. Thickness: 3/4 inches.
3. Composition: Wet formed.
4. NRC Range:.50 to.60, determined as specified in ASTM E1264.
5. Ceiling Attenuation Class (CAC): 33, determined as specified in ASTM E1264.
6. Edge: Square.
7. Surface Color: White.
8. Surface Pattern: coarse texture.
9. Product:
   a. Armstrong Armatuff 861.
   b. USG Rock Face ClimaPlus 56735.
10. Suspension System: Exposed grid Type 2 .
11. Location: Toilet Rooms, other areas as noted.

E. Acoustical Panels Type 3: Painted mineral fiber, ASTM E 1264 Type 1 with the following characteristics:
1. Size: 24 by 24 inches.
2. Thickness: 7/8 inches.
3. Composition: Wet formed.
4. NRC Range:.80 to.85, determined as specified in ASTM E1264.
5. Ceiling Attenuation Class (CAC): 35, determined in accordance with ASTM E1264.
6. Edge: Square.
7. Surface Color: White.
8. Surface Pattern: fine texture.
9. Product:
   a. Armstrong : Health Zone Ultima High NRC, Item No 1445
   b. USG: Mars ClimaPlus Healthcare, Item No. 86152
10. Suspension System: Exposed grid Type 2.
11. Location: Kitchen, and as noted.

F. Acoustical Panels Type 4: Painted mineral fiber, ASTM E1264 Type III, with the following characteristics:
1. Size: 24 x 24 inches.
2. Thickness: 7/8 inches.
3. Composition: Wet formed.
4. Light Reflectance:.85 percent, determined as specified in ASTM E1264.

NOT FOR BIDDING

5. NRC Range:.75 , determined as specified in ASTM E 1264.
6. Ceiling Attenuation Class (CAC): 35, determined as specified in ASTM E1264.
7. Edge: SLT.
8. Surface Color: White.
9. Surface Pattern: fine texture.
10. Suspension System: Exposed grid Type 1.
11. Products:
    a. Armstrong : Cirrus High NRC, Item No 574
    b. USG - Eclipse High NRC, Propduct No. 563
12. Location: as shown.

G. Acoustical Panels Type 5: Painted fiberglass, ASTM E1264, Type: XII.
1. Size: 24 x 24 inches.
2. Thickness: 1 inch.
3. Light Reflectance: 0.90.
4. NRC Range: 0.95 minimum.
5. Edge: Reveal.
6. Surface Color: White.
7. Suspension System: Exposed grid Type 1, with perimeter trim.
8. Products:
    a. Certainteed Symphony F.
9. Location: Auditorium ceilings, and as noted.

H. Acoustical Panels Type 6: Painted fiberglass plank, ASTM E1264, Type: XII.
1. Size: 24 x 96 inches.
2. Thickness: 1 inch.
3. Light Reflectance: 0.90.
4. NRC: 0.95 minimum.
5. Edge: Reveal edge.
6. Surface Color: White.
7. Suspension System: Exposed grid Type 1, with perimeter trim.
8. Products:
    a. Certainteed Symphony F.
9. Location: West entry corridor, and as noted.

2.03 SUSPENSION SYSTEM(S) AND PERIMETER TRIM

A. Metal Suspension Systems - General: Complying with ASTM C635/C635M; die cut and interlocking components, with stabilizer bars, clips, splices, perimeter moldings, and hold down clips as required.

B. Exposed Steel Suspension System Type 1: Formed galvanized steel, commercial quality cold rolled; intermediate-duty.
1. Profile: Tee; 15/16 inch wide face.
2. Construction: Double web.
3. Finish: White painted.
4. Product: Prelude XL by Armstrong; DX by USG

C. Exposed Steel Suspension System Type 2: Where this designation is indicated, provide acoustical panel ceiling suspension system complying with the following:
1. Products:
    a. ZXLA; USG

NOT FOR BIDDING

b. Prelude Plus; Armstrong

2. Wide-Face, Capped, Double-Web, Hot-Dip Galvanized-Steel Suspension System: Main and cross runners roll formed from cold-rolled steel sheet hot-dip galvanized according to ASTM A 653/A 653M, G60 (Z180) coating designation, with pre-finished, 15/16-inch-(24-mm-) wide, aluminum caps on flanges; other characteristics as follows:
   a. Aluminum Cap Finish: Painted white.

D. Perimeter Trim:
   1. General: nominal 6" high, extruded aluminum, factory mitered profile.
   2. Manufacturers and products:
      a. CertainTeed Terminus Straight Perimeter Trim, with square corner post.
      b. Armstrong Axiom Classic Trim.
      c. USG Compasso Elite
      d. Substitutions: See Section 016000 - Product Requirements.
   3. Finish: as selected from manufacturer's standard range.

2.04 ACCESSORIES

A. Support Channels and Hangers: Galvanized steel; size and type to suit application, seismic requirements, and ceiling system flatness requirement specified.

B. Perimeter Moldings: Same material and finish as grid.
   1. At Exposed Grid: Provide L-shaped molding for mounting at same elevation as face of grid.

C. Acoustical Insulation: Specified in Section 072100.

D. Acoustical Sealant For Perimeter Moldings: Non-hardening, non-skinning, for use in conjunction with suspended ceiling system.
   1. Acoustical Sealant for Exposed and Concealed Joints: Manufacturer's standard non-sag, paintable, non-staining latex sealant complying with ASTM C 834 and the following requirements:
      a. Product is effective in reducing airborne sound transmission through perimeter joints and openings in building construction as demonstrated by testing representative assemblies according to ASTM E 90.
   2. Available Products: Subject to compliance with requirements, products that may be incorporated into the Work include, but are not limited to, the following:
      a. Acoustical Sealant for Exposed and Concealed Joints:
         1) PL Acoustical Sealant; Chemrex, Inc., Contech Brands.
         2) AC-20 FTR Acoustical and Insulation Sealant; Pecora Corp.
         3) SHEETROCK Acoustical Sealant; United States Gypsum Co.

E. Touch-up Paint: Type and color to match acoustical and grid units.

F. Fiberglass Edge Sealant: For re-sealing cut fiberglass edges.

G. Stabilizer bars: for plank acoustical tile installations.

**PART 3 EXECUTION**

3.01 EXAMINATION

A. Verify existing conditions before starting work.

B. Verify that layout of hangers will not interfere with other work.

3.02 PREPARATION

A. Install after major above-ceiling work is complete.

NOT FOR BIDDING

B. Coordinate the location of hangers with other work.

3.03 INSTALLATION - SUSPENSION SYSTEM

A. Install suspension system in accordance with ASTM C636/C636M, ASTM E580/E580M, and manufacturer's instructions and as supplemented in this section.

B. Rigidly secure system, including integral mechanical and electrical components, for maximum deflection of 1:360.

C. Locate system on room axis according to reflected ceiling plans.

D. Install after major above-ceiling work is complete. Coordinate the location of hangers with other work.

E. Hang suspension system independent of walls, columns, ducts, pipes and conduit. Where carrying members are spliced, avoid visible displacement of face plane of adjacent members.

F. Where ducts or other equipment prevent the regular spacing of hangers, reinforce the nearest affected hangers and related carrying channels to span the extra distance.

G. Do not support components on main runners or cross runners if weight causes total dead load to exceed deflection capability.

H. Support fixture loads using supplementary hangers located within 6 inches of each corner, or support components independently.

I. Do not eccentrically load system or induce rotation of runners.

J. Install edge moldings and trim of type indicated at perimeter of acoustical ceiling area and where necessary to conceal edges of acoustical panels.

1. Apply acoustical sealant in a continuous ribbon concealed on back of vertical legs of moldings before they are installed.
2. Screw attach moldings to substrate at intervals not more than 16 inches (400 mm) o.c. and not more than 3 inches (75 mm) from ends, leveling with ceiling suspension system to a tolerance of 1/8 inch in 12 feet (3 mm in 3.6 m). Miter corners accurately and connect securely.
3. Do not use exposed fasteners, including pop rivets, on moldings and trim.

K. Form expansion joints. Form to accommodate plus or minus 1 inch movement. Maintain visual closure.

L. Suspend ceiling hangers from building's structural members and as follows:

1. Install hangers plumb and free from contact with insulation or other objects within ceiling plenum that are not part of supporting structure or of ceiling suspension system.
2. Splay hangers only where required to miss obstructions; offset resulting horizontal forces by bracing, counter splaying, or other equally effective means.
3. Where width of ducts and other construction within ceiling plenum produces hanger spacings that interfere with location of hangers at spacings required to support standard suspension system members, install supplemental suspension members and hangers in form of trapezes or equivalent devices. Size supplemental suspension members and hangers to support ceiling loads within performance limits established by referenced standards and publications.
4. Secure wire hangers to ceiling suspension members and to supports above with a minimum of three tight turns. Connect hangers directly either to structures or to inserts, eye screws, or other devices that are secure; that are appropriate for substrate; and that will not deteriorate or otherwise fail due to age, corrosion, or elevated temperatures.

NOT FOR BIDDING

5. Do not support ceilings directly from permanent metal forms or floor deck. Fasten hangers to cast-in-place hanger inserts, powder-actuated fasteners, or drilled-in anchors that extend through forms into concrete.
6. Do not attach hangers to steel deck tabs.
7. Do not attach hangers to steel roof deck. Attach hangers to structural members.
8. Space hangers not more than 48 inches (1200 mm) o.c. along each member supported directly from hangers, unless otherwise indicated; and provide hangers not more than 8 inches (200 mm) from ends of each member.

M. Install suspension system runners so they are square and securely interlocked with one another. Remove and replace dented, bent, or kinked members.

N. Install special brake-metal shapes at window heads so that they are square and finished to provide a precise fit. Do not use exposed fasteners.

3.04 INSTALLATION - ACOUSTICAL UNITS

A. Install acoustical units in accordance with manufacturer's instructions.

B. Fit acoustical units in place, free from damaged edges or other defects detrimental to appearance and function.

C. Lay directional patterned units with pattern parallel to longest room axis.

D. Fit border trim neatly against abutting surfaces.

E. Install units after above-ceiling work is complete.

F. Install acoustical units level, in uniform plane, and free from twist, warp, and dents.

G. Cutting Acoustical Units:
1. Cut to fit irregular grid and perimeter edge trim.
2. Make field cut edges of same profile as factory edges.
3. Double cut and field paint exposed reveal edges.

H. Where round obstructions, bullnose concrete block corners, and other similar conditions occur, provide preformed closures to match perimeter molding.

I. Install hold-down clips on panels within 20 ft of an exterior door, and the following locations:
1. Locker Rooms

3.05 TOLERANCES

A. Maximum Variation from Flat and Level Surface: 1/8 inch in 10 feet.

B. Maximum Variation from Plumb of Grid Members Caused by Eccentric Loads: 2 degrees.

**END OF SECTION**

NOT FOR BIDDING

# SECTION 096429
# WOOD STRIP FLOORING

## PART 1 GENERAL

1.01 SECTION INCLUDES

A. Wood strip flooring, nailed:
   1. Athletic wood flooring over resilient sleeper system at Gymnasium.

B. Hardboard flooring over resilient sleeper system and accessories at Stage.

C. Secondary subflooring.

D. Resilient sleepers system.

E. Sheet vapor retarder.

F. Wall base.

G. Surface finishing and game markings.

H. Protective covering.

1.02 RELATED REQUIREMENTS

A. Section 033000 - Concrete: Recessed concrete subfloor surface and formed depressions for deep floor sockets, inserts, and installation of vapor barrier.

B. Section 030506 - Under-slab Vapor Barrier: Vapor barrier material installed below concrete slab.

1.03 REFERENCE STANDARDS

A. MFMA (SPEC) - Guide Specifications for Maple Flooring Systems; Maple Flooring Manufacturers Association; current edition.

B. MFMA PUR - Performance Uniformity Requirements

C. ASTM E 96 - Standard Test Methods for Water Vapor Transmission of Materials

D. APA - Plywood product standards; Plywood design specification; Plywood as a resilient floor underlayment; Steps to construct a solid, squeak-free floor system;

E. DIN – Performance Standard 18032 Part 2

F. MFMA - Floor Finish List and Specifications

G. MFMA - Grading Rules

H. WSFI - Recommendations for the Correct Preparation, Finishing, and Testing of Concrete Subfloor Surfaces to Receive Wood Flooring.

1.04 SUBMITTALS

A. See Section 01 3000 - Administrative Requirements, for submittal procedures.

B. Submit the following for approval prior to placing materials orders, any fabrication, or installation:
   1. Manufacturer's product data sheets, specifications, performance data for each type of wood flooring and finish system materials, with manufacturer's installation instructions and recommended maintenance procedures.
   2. Wood flooring and finish system manufacturers' standard written guarantees covering defects in materials and workmanship, clearly defining the terms included in the coverage.

NOT FOR BIDDING

3. Submit 1 electronic copy of shop drawings for review. Fabrication shall not commence until the Theatre Consultant and the Architect determine that the shop drawings are in compliance with the design intent of the Contract Documents. Shop drawings shall be revised and resubmitted as required.

C. Shop drawings shall include the following:
1. Measured plan drawing indicating all critical dimensions. Field verify all dimensions prior to installation.
2. Measured plan indicating placement of sleepers and staggering of substrate and surface layers as related to sleeper placement.
3. Section showing base, and section showing transitions with abutting flooring materials.
4. Details indicating expansion provisions.
5. Indicate location, size, design, and color of game markings.

D. Construction sample: Provide a finished 24 by 24 inch section of completed flooring utilizing actual system, demonstrating actual materials and finish coats.
1. Submit one sample for each type of finish and alternate finish specified, for final selection.

E. Installation Instructions: Indicate standard and special installation procedures.

F. Maintenance Data: At the completion of the installer's work provide 3 copies of a maintenance data binder, 2 for the owner and one for the Theatre Consultant. Binders shall include manufacturer's product data for all materials used in the floor construction and finishing, manufacturer's recommended maintenance procedures, and recommended maintenance materials. Materials shall be provided in printed and electronic (PDF) versions and bound in a three-ring binder and adequately labeled. Provide the electronic copies on thumb drives.

1.05 QUALITY ASSURANCE

A. Perform work of this section in accordance with MFMA (SPEC).

B. Manufacturer Qualifications: Company specializing in manufacturing products specified in this section with minimum three years documented experience.

C. Installer qualifications:
1. An experienced installer who has completed stage/athletic flooring similar in material, design, and extent to that indicated for this Project and whose work has resulted in flooring installations with a record of successful in-service performance.
2. Installer should cite references with contact information from previous stage/athletic flooring installations.
3. Installer specializing in applying the work of this Section with a minimum of 5 years documented experience of the type of flooring system specified.
4. Installer shall perform work in accordance with APA and MFMA standards.

D. Single Subcontractor Responsibility: Subcontract entire floor system to a single firm for undivided responsibility. Obtain flooring of each type from single manufacturer or source, to ensure match of color, pattern, texture and quality.

1.06 FIELD CONDITIONS

A. Do not install wood flooring until wet construction work is complete and ambient air at installation space has moisture content stabilized at maximum moisture content of 40 percent.

B. Provide heat, light, and ventilation prior to installation.

C. Store materials in area of installation for minimum period of 24 hours prior to installation.

NOT FOR BIDDING

D. Maintain minimum room temperature of 65 degrees F for a period of two days prior to delivery of materials to installation space, during installation, and after installation.

**PART 2 PRODUCTS**

2.01 FLOOR SYSTEMS

A. Manufacturers: Subject to compliance with the requirements specified herein, manufacturers offering products which may be incorporated in the work include the following:
   1. Basis of Design: Robbins, Inc., Wausau, WI: www.robbinsfloor.com.
   2. Subject to compliance with requirements, the products by the following manufacturers are also acceptable:
      a. Horner Flooring Company, Inc., Dollar Bay, MI,
      b. Aacer Sports Flooring, Peshtigo, WI,
   3. Substitutions: See Section 01 6000 - Materials and Equipment.

B. Gymnasium Flooring:
   1. Basis-of-Design Product: Subject to compliance with requirements, provide Robbins, Inc., product "Bio-Channel Star" or equivalent product by one of the following manufacturers:
      a. Horner Flooring Company, Inc.
      b. Aacer Sports Flooring
      c. Action Floor Systems : AnchorFlex Anchored Resilient
   2. Strip Flooring
      a. Northern hard maple, 2-1/4" (57mm) width x 25/32" (20mm) thick, 2nd & Better, T&G and end matched, kiln dried, random length
      b. Preservative treatment: Clear, penetrating, water-repellant wood preservative that protects against mold, mildew, staining and decay fungi; complying with MFMA's written recommendations and applied by imersion.
   3. Subfloor:
      a. Nominal 3/4" x 24" x 96" subfloor sheathing with factory-prepared anchor slots.
   4. Resilience Layer: 9/16" Profiled Zero/G Shock Pad.
   5. Vapor barrier: 6-mil polyethylene
   6. Anchors: Metal channel with anchor spike.
   7. Finishing Material:
      a. Oil modified polyurethane sealer and finish.
      b. Gameline paint shall be recommended by the finishing materials manufacturer and be compatible with the finish.

C. Stage Floor:
   1. Basis-of-Design Product: Subject to compliance with requirements, provide Robbins, Inc., product "Bio-Channel Classic". Other approved manufacturers include:
      a. Horner Flooring Company, Inc.; Multi-Purpose Channel", "low profile" version
      b. Aacer Sports Flooring; Anchored Power Sleeper SE"
      c. Action Floor Systems : Power Channel, Anchored Resilient, with flooring and subflooring as noted below.
   2. Flooring: 1/4 inch nominal thickness wet-dry process, S2S (smooth two sides), oil-tempered hardboard.
      a. Manufacturer's reference:
         1) S2S Phenolic Bonded Hardboard Panel, Georgia Pacific, Philips, WI Plant
         2) Signature S2S Panel, Decorative Panels International, Toledo, Ohio
         3) Smooth Two Sides Hardboard Panel, D&M Lumber Products Co, Brooklyn, NY

NOT FOR BIDDING

3. Paper slip sheet: Red Rosin Paper. Install between subfloor and hardboard.
4. Subflooring: 2 layers 3/4 inch nominal thickness EWA rated STURD-I-FLOOR, tongue and groove plywood, exposure durability classified, EXPOSURE I , touch-sanded.
5. Flooring Channels: Resilient channels consisting of a 1-1/2 by 2-5/8 inch wood engineered wood sleeper with EPDM cushion attached, factory encased in a steel channel. Sleeper must be free to move vertically within steel channel confines to assure proper uniformity of resiliency and function.
   a. EPDM Cushion: minimum 7/16 inch (11 mm) thick double-trapezoidal shaped EPDM rubber with reverse cavity having non-coextensive lower and upper surfaces.
6. Vapor Retarder: Black polyethylene sheet, 6 mil thick; 2 inch wide tape for joint sealing.
7. Fasteners:
   a. Channel anchors: Minimum 1-1/4 inch (35mm) long steel power driven shot anchors, as required to penetrate and be retained in concrete with appropriate size charge for securing wood sleepers to concrete. Longer anchors may be required depending on shim thickness. Anchors shall be driven through predetermined anchor holes in resilient channel and shall be driven through the shimming material.
   b. Subflooring: Ring or screw-type subflooring nails, or other fasteners as recommended by the flooring manufacturer, for plywood to plywood attachment.
   c. Hardboard: Flat head wood screws, 1 1/4 inches long, countersunk into hardboard sheet. Fasteners shall be anodized black.

2.02 ACCESSORIES

A. Wall base:
   1. Stage: Steel angle base, 4 by 4 inches. Base shall be securely attached to wall to withstand an upwards load of 50 pounds per linear foot. A gap between the base and the wall shall be maintained at one-quarter of an inch by bushings to allow for venting.
   2. Gymnasium: Heavy duty, molded, 3" x 4" vented cove base with pre-molded outside corners.

B. Expansion Strip: Serviceed Products neoprene rubber, produced and recommended for this use. Material shall be firm enough to resist abuse and compression, but suitably compressible to permit floor expansion. Provide continuously full depth of floor and subfloor at juncture of floor to vertical surface not covered by base or threshold.

C. Shim Strips:
   1. Plywood or hardwood shim strips. Thickness as required to achieve overall system thickness and levelness. Type as recommended by manufacturer.
   2. If required buildup is less than 2”, resilient channel shall be anchored to the concrete through the shims.
   3. If required buildup exceeds 2”, shims shall be anchored to the concrete independently from resilient channel and channel shall be attached to shims using a #14 deck screw, or as recommended by the manufacturer. Shims shall be 4 inches by 4 inches minimum.

D. Filler for patching, smoothing and leveling subfloors and underlayment: Portland cement-based latex underlayment acceptable to flooring manufacturer, equal to the following:
   1. Ardex, Inc., products “Feather Flash” and “Ardex SD-P”.
   2. Quikrete Companies, product “Fast-Set Underlayment 1248”.
   3. Silpro Masonry Systems Inc., product “Masco Latex Cement”.

NOT FOR BIDDING

**PART 3 EXECUTION**

3.01 EXAMINATION

A. Verify concrete substrate has cured for at least 60 days. Test concrete with 3 percent solution of phenolphtalein in grain alcohol for dryness. Do not proceed with installation until substrate passes dryness test, immediately notify Architect of unacceptable substrate conditions.

B. Verify that permanent heat, light, and ventilation is complete and operational prior to installation.

C. Inspect all substrate surfaces and verify that they are in proper condition to receive the work of this Section. Verify that concrete substrate surfaces are smooth and flat to plus or minus 1/8 inch over a radius of 10 feet, free of scaling, oil, grease, dust, and foreign substance.

D. All discrepancies shall be reported in writing.

E. Commencement of installation means acceptance of site conditions by the installer.

3.02 PREPARATION

A. Comply with flooring manufacturer's requirements for preparation of substrate to receive wood flooring.

B. Remove sub-floor ridges and bumps. Fill minor or local low spots, cracks, joints, holes, and other defects with subfloor filler to achieve smooth, flat, hard surface. Prohibit traffic until filler is cured.

C. Thoroughly vacuum clean all receiving surfaces before commencing installation work.

D. Open bundles of flooring, and permit the pieces to properly acclimatize prior to installing same.

3.03 SLEEPER INSTALLATION

A. Install in accordance with manufacturer's instructions.

B. Install polyethylene vapor barrier with joints lapped a minimum of 6 inches.

C. Place resilient sleepers 16 inches on center, end to end, staggering end joints in adjacent rows. Anchor channels at predetermined locations using power actuated or pneumatic anchoring methods. Sleepers will be placed perpendicular to the proscenium opening or the intended direction of the hardboard, where applicable.

D. Install acoustical insulation between sleeper channels and at expansion voids as shown on architectural plans.

E. Install first layer of plywood subfloor with 4-foot edges parallel to sleeper channels and secure 6 inches on center into channel sleepers. The ends of the sheets shall land on sleepers. Install second layer of plywood subfloor at 90 degrees to first layer.

F. Install plywood with a 1/16" gap on non-grooved sides and 1/8" gap on grooved sides, between sheets to allow for expansion of the material.

G. Sheathing Paper: Place over wood subfloor; lap edges and ends 2 inches, staple in place.

3.04 WOOD STRIP FLOORING INSTALLATION:

A. Install in accordance with manufacturer's, MFMA, and NOFMA instructions; predrill and blind nail to sleepers.

B. Lay flooring parallel to length of room areas. Verify alignment as work progresses.

C. Arrange flooring with end matched grain set flush and tight.

NOT FOR BIDDING

D. Terminate flooring at centerline of door openings where adjacent floor finish is dissimilar; provide divider strips and transition strips in accordance with flooring manufacturer's recommendations and as indicated..

E. Install edge strips at unprotected or exposed edges, and where flooring terminates.

F. Secure edge strips before installation of flooring with stainless steel screws.

G. Install flooring tight to floor access covers.

H. Provide 2 inch expansion space at fixed walls and other interruptions.

I. Finishing:
   1. Mask off adjacent surfaces before beginning sanding.
   2. Sand flooring to smooth even finish with no evidence of sander marks. Take precautions to contain dust. Remove dust by vacuum.
   3. Apply finish in accordance with floor finish manufacturer's instructions.
   4. Apply filler and three finish coats.
   5. Apply first coat, allow to dry, then buff lightly with steel wool to remove irregularities. Vacuum clean and wipe with damp cloth before applying succeeding coat.
   6. Lightly buff between coats with steel wool and vacuum clean before applying succeeding coat.
   7. Apply colored game lines 2 inches wide and logo to layout indicated on drawings.
   8. Apply last coat of finish.

3.05 HARDBOARD FLOORING INSTALLATION

A. Hardboard shall be laid with 8-foot edges parallel to proscenium and perpendicular to bio-channel.

B. Install hardboard with a 1/16” gap on all sides between sheets to allow for expansion of the material.

C. Fasten hardboard with screws spaced at 6 inches on center along edges, and 12 inches within the panels. Hold back screws from perimeter of the room so that they are accessible when the base is installed.

D. Unless otherwise indicated, lay flooring symmetrical about proscenium or room centerline, as applicable. Fit neatly at vertical interruptions. Provide for expansion at vertical surfaces.

E. Install wood subfloor so that it is properly secured, is smooth and flat to plus or minus 1/8 inch in a radius of 10 feet, and is free of foreign substances.

F. After installation, but prior to finishing, verify the finished surface is smooth and flat to plus or minus 1/8 inch in a radius of 10 feet, via laser guided survey. Provide the survey information to the Architect and the Theatre Consultant.

G. Hardboard Finishing:
   1. Allow installed floor to acclimate to ambient conditions for at least 10 days before finishing. Protect finish surface during this period against damage and wear with tarps or other sacrificial coverings.
   2. Mask off adjacent surfaces and take precautions to contain fumes.
   3. Thoroughly vacuum-clean all surfaces and other finish surfaces within space, clean surfaces completely free from dust, and dry-mop with a tack cloth-clad mop.
   4. Hardboard flooring shall be finished with:
      a. Primer: One coat of Zinsser Bull’s Eye 1-2-3, Deep Tint Base (02030) - Lamp Black universal colorant, maximum amount recommended by manufacturer or 6 fl. Oz per gallon, whichever is greater.

NOT FOR BIDDING

b. Topcoat: Two coats of Coronado Paint SuperKote 5000 Acrylic Traffic Marking Paint (66) - Matte Black

H. Alternate hardboard flooring finish (1):
1. Primer: One coat of Pittsburgh Paints SEALGRIP 100% Acrylic Universal Primer-Sealer (17-922), Deep Tint Base - Lamp Black universal colorant, maximum amount recommended by manufacturer or 6 fl. Oz per gallon, whichever is greater.
2. Topcoat: Two coats of California Paints Wear-All Multi-Purpose Acrylic Latex Enamel (528XX) Deep Tint Base - Lamp Black universal colorant, maximum amount recommended by manufacturer or 6 fl. Oz per gallon, whichever is greater.

I. Alternate hardboard flooring finish (2):
1. Primer: One coat of Zinsser Bull's Eye 1-2-3, Deep Tint Base (02030) - Lamp Black universal colorant, maximum amount recommended by manufacturer or 6 fl. Oz per gallon, whichever is greater.
2. Finish and Top Coats: Two coats of Benjamin Moore Latex Floor and Patio Enamel (122), Matte Finish - Lamp Black universal colorant, maximum amount recommended by manufacturer or 6 fl. Oz per gallon, whichever is greater.
3. Allow each coat to completely dry, as per manufacturer's recommendations and ambient conditions, prior to application of next coat.

3.06 CLEANING

A. Clean and polish floor surfaces in accordance with manufacturer's instructions.

3.07 PROTECTION

A. Prohibit traffic on floor finish for 5 days after installation.

B. Place protective coverings over finished floors; do not remove coverings until Substantial Completion.
1. Protect flooring against damage and wear with red rosin paper with taped joints during remainder of construction period to ensure that flooring and finish are without damage or deterioration at time of substantial completion.

3.08 COMMISSIONING

A. The Contractor shall work with the General Contractor or Construction Manager to arrange for a commissioning period for the work in this Section. The commissioning period shall take place at least 2 months before the first scheduled rehearsal onstage.

3.09 OWNER'S ACCEPTANCE

A. The Owner will accept the work in this Section upon the satisfactory completion of all punch list items.

B. Prior to final acceptance, the Owner reserves the right to use any completed portion of the work in this Section at no additional cost, unless said use poses a potential hazard to personnel or risks damage to the work in this Section or the work of others.

C. The Warranty period shall commence upon final acceptance by the Owner.

**END OF SECTION**

NOT FOR BIDDING

# SECTION 096500
# RESILIENT FLOORING

## PART 1 GENERAL

1.01 SECTION INCLUDES

A. Resilient sheet flooring.

B. Resilient tile flooring.

C. Resilient base.

D. Resilient stair accessories.

E. Installation accessories.

1.02 RELATED REQUIREMENTS

A. Section 033000 - Cast-in-Place Concrete: Restrictions on curing compounds for concrete slabs and floors.

B. Section 090561 - Common Work Results for Flooring Preparation: Independent agency testing of concrete slabs, cleaning, and preparation.

C. Section 090561 - Common Work Results for Flooring Preparation: Concrete slab moisture and alkalinity testing and remediation procedures.

1.03 PRICE AND PAYMENT PROCEDURES

A. See Section 012300 - Alternates, for alternates affecting the work of this section.

1.04 REFERENCE STANDARDS

A. ASTM E648 - Standard Test Method for Critical Radiant Flux of Floor-Covering Systems Using a Radiant Heat Energy Source; 2014c.

B. ASTM F1066 - Standard Specification for Vinyl Composition Floor Tile; 2004 (Reapproved 2014).

C. ASTM F1344 - Standard Specification for Rubber Floor Tile; 2015.

D. ASTM F1700 - Standard Specification for Solid Vinyl Floor Tile; 2013a.

E. ASTM F1861 - Standard Specification for Resilient Wall Base; 2008 (Reapproved 2012).

F. ASTM F1913 - Standard Specification for Vinyl Sheet Floor Covering Without Backing; 2004 (Reapproved 2014).

G. ASTM F2169 - Standard Specification for Resilient Stair Treads; 2015.

H. NFPA 253 - Standard Method of Test for Critical Radiant Flux of Floor Covering Systems Using a Radiant Heat Energy Source; 2015.

1.05 SUBMITTALS

A. Product Data: Provide data on specified products, describing physical and performance characteristics; including sizes, patterns and colors available; and installation instructions.

B. Shop Drawings: Indicate seaming plans and floor patterns.

C. Selection Samples: Submit manufacturer's complete set of color samples for Architect's initial selection.

D. Verification Samples: Submit two samples, 6 by 6 inch in size illustrating color and pattern for each resilient flooring product specified.

E. Concrete Subfloor Test Report: Submit a copy of the moisture and alkalinity (pH) test reports.

NOT FOR BIDDING

F. Certification: Prior to installation of flooring, submit written certification by flooring manufacturer and adhesive manufacturer that condition of sub-floor is acceptable.

G. Maintenance Data: Include maintenance procedures, recommended maintenance materials, and suggested schedule for cleaning, stripping, and re-waxing.

H. Maintenance Materials: Furnish the following for Owner's use in maintenance of project.
   1. Extra Flooring Material: 100 square feet of each type and color.
   2. Extra Wall Base: 50 linear feet of each type and color.
   3. Extra Stair Materials: Quantity equivalent to 5 percent of each type and color.

1.06 QUALITY ASSURANCE

A. Manufacturer Qualifications: Company specializing in manufacturing specified flooring with minimum three years documented experience.
   1. Installer Qualifications: Company specializing in installing specified flooring with minimum three years documented experience.

1.07 DELIVERY, STORAGE, AND HANDLING

A. Upon receipt, immediately remove any shrink-wrap and check materials for damage and the correct style, color, quantity and run numbers.

B. Store all materials off of the floor in an acclimatized, weather tight space.

C. Maintain temperature in storage area between 55 degrees F and 90 degrees F.

D. Protect roll materials from damage by storing on end.

E. Do not double stack pallets.

1.08 FIELD CONDITIONS

A. Store materials for not less than 48 hours prior to installation in area of installation at a temperature of 70 degrees F to achieve temperature stability. Thereafter, maintain conditions above 55 degrees F.

**PART 2 PRODUCTS**

2.01 SHEET FLOORING

A. Vinyl Sheet Flooring: Type SV-1, SV-2: Homogeneous without backing, with color and pattern throughout full thickness.
   1. Manufacturers:
      a. Armstrong, Medintech/Medintone, with Diamond 10® Coating .
   2. Description: Unbacked, nonlayered, homogeneous sheet vinyl flooring, protected by a diamond-infused UV-cured polyurethane finish.
      a. Colors and pattern detail shall be dispersed uniformly throughout the thickness of the product.
      b. Color pigments:insoluble in water and resistant to cleaning agents and light.
   3. Minimum Requirements: Comply with ASTM F1913.
   4. Critical Radiant Flux (CRF): Minimum 0.45 watt per square centimeter, when tested in accordance with ASTM E648 or NFPA 253.
   5. Thickness: 0.080 inch nominal.
   6. Sheet Width: 79 inch minimum.
   7. Seams: Heat welded.
   8. Color: As indicated on drawings.

B. Welding Rod: Solid bead in material compatible with flooring, produced by flooring manufacturer for heat welding seams, and in color matching field color.

NOT FOR BIDDING

2.02 TILE FLOORING

A. Vinyl Composition Tile - Type VCT-1 through VCT-7: Homogeneous, with color extending throughout thickness.
   1. Manufacturers:
      a. Armstrong World Industries, Inc; Standard Excelon - Imperial Texture: www.armstrong.com/#sle.
      b. Substitutions: See Section 016000 - Product Requirements.
   2. Minimum Requirements: Comply with ASTM F1066, Class 2 Through Pattern.
   3. Critical Radiant Flux (CRF): Minimum 0.45 watt per square centimeter, when tested in accordance with ASTM E648 or NFPA 253.
   4. Size: 12 by 12 inch.
   5. Thickness: 0.125 inch.
   6. Color: As indicated on drawings.

B. Luxury Vinyl Tile (LVT-1): Printed film type, with transparent or translucent wear layer.
   1. Manufacturers:
      a. Tandus Centiva; Contour series.
      b. Substitutions: See Section 016000 - Product Requirements.
   2. Minimum Requirements: Comply with ASTM F1700, of Class corresponding to type specified.
   3. Critical Radiant Flux (CRF): Minimum 0.45 watt per square centimeter, when tested in accordance with ASTM E648 or NFPA 253.
   4. Sizes: as indicated.
   5. Wear Layer Thickness: 0.03 inch (20 mil).
   6. Total Thickness: 0.120 inch.
   7. Color: As indicated on drawings.

C. Quartz Tile - Type QT-1, QT-2, QT-3: Printed film type, with transparent or translucent wear layer; acoustic interlayer or backing.
   1. Manufacturers:
      a. Altro Flooring; Altro Quartz Tile: www.altrofloors.com.
      b. Substitutions: See Section 016000 - Product Requirements.
   2. Description: Homogeneous combination of high quality vinyl, calcium carbonate, and fine and naturally weathered quartz. Altro Quartz Tile meets the requirements of ASTM F1066, Class l, Type A
   3. Minimum Requirements: ASTM F1066, Class l, Type A
   4. Critical Radiant Flux (CRF): Minimum 0.45 watt per square centimeter, when tested in accordance with ASTM E648.
   5. Square Tile Size: 24 by 24 inch, nominal.
   6. Thickness: 0.08 inch, 2 mm.
   7. Color: As indicated on drawings.

D. Rubber Tile (RTF-1): Type I- Homogeneous, color and pattern throughout thickness;
   1. Manufacturers:
      a. Burke Flooring; Endura Line: www.burkeflooring.com/#sle.
      b. Johnsonite, a Tarkett Company; Minerality Resilient Rubber Floor Tiles: www.johnsonite.com.
      c. Roppe Corp: www.roppe.com..
      d. Substitutions: See Section 016000 - Product Requirements.

NOT FOR BIDDING

2. Minimum Requirements: Comply with ASTM F1344, of Class corresponding to type specified.
3. Critical Radiant Flux (CRF): Minimum 0.45 watt per square centimeter, when tested in accordance with ASTM E648 or NFPA 253.
4. Size: 24 by 24 inch.
5. Total Thickness: 0.125 inch.
6. Texture: match stair treads.
7. Color: as selected.
8. Location: Use for stair landings.

2.03 STAIR COVERING

A. Stair Treads (RST-1): Rubber; full width and depth of stair tread in one piece, tapered thickness.
   1. Manufacturers:
      a. Burke Flooring: www.burkeflooring.com.
      b. Johnsonite, a Tarkett Company: www.johnsonite.com.
      c. Roppe Corp: www.roppe.com.
      d. Substitutions: See Section 016000 - Product Requirements.
   2. Minimum Requirements: Comply with ASTM F2169, Type TS, rubber, vulcanized thermoset.
   3. Critical Radiant Flux (CRF): Minimum 0.45 watt per square centimeter, when tested in accordance with ASTM E648 or NFPA 253.
   4. Thickness: 0.210 inches, tapering to 0.113 inches.
   5. Nosing: Square.
   6. Striping: 2 inch wide contrasting color rubber strips.
   7. Pattern: Johnsonite "Bamboo" surface texture, or equivalent texture from other listed manufacturers..
   8. Color: as selected.

B. Stair Risers (RR-1): Full height and width of tread in one piece, matching treads in material and color.
   1. Manufacturers:
      a. Burke Flooring: www.burkeflooring.com.
      b. Johnsonite, a Tarkett Company: www.johnsonite.com.
      c. Roppe Corp: www.roppe.com.
      d. Substitutions: See Section 016000 - Product Requirements.
   2. Thickness: 0.125 inch.

C. Rubber Nosing (RN-1)
   1. Manufacturers:
      a. Burke Flooring: www.burkeflooring.com.
      b. Johnsonite, a Tarkett Company: www.johnsonite.com.
      c. Roppe Corp: www.roppe.com.

2.04 RESILIENT BASE

A. Resilient Base Type RB-1, RB-2, RB-3, RB-4: ASTM F1861, Type TS rubber, vulcanized thermoset; top set Style B, Cove.
   1. Manufacturers:
      a. Johnsonite, a Tarkett Company: www.johnsonite.com.
      b. Substitutions: See Section 016000 - Product Requirements.

NOT FOR BIDDING

2. Height: 4 inch (typical, unless otherwise noted).
3. Thickness: 0.125 inch.
4. Finish: Satin.
5. Color: As indicated on drawings.

B. Millwork Rubber Base, Type MRB-1:
1. ASTM F-1861 Standard Specification for Resilient Wall Base, Type TP, and Group 1.
2. Manufacturer and Product: Johnsonite Reveal.
a. Substitutions: See Section 01 6000 - Product Requirements.
3. Configuration: 1/4" (6.35mm) thick by 6" (152 mm) height with a 45° angular top and a 7/32" (5.5mm) wide surface reveal

2.05 ACCESSORIES

A. Subfloor Filler: White premix latex; type recommended by adhesive material manufacturer.

B. Primers, Adhesives, and Seam Sealer: Waterproof; types recommended by flooring manufacturer.

C. Moldings, Transition and Edge Strips: Same material as flooring.

**PART 3 EXECUTION**

3.01 EXAMINATION

A. Verify that surfaces are flat to tolerances acceptable to flooring manufacturer, free of cracks that might telegraph through flooring, clean, dry, and free of curing compounds, surface hardeners, and other chemicals that might interfere with bonding of flooring to substrate.

B. Verify that wall surfaces are smooth and flat within the tolerances specified for that type of work, are dust-free, and are ready to receive resilient base.

C. Cementitious Subfloor Surfaces: Verify that substrates are ready for resilient flooring installation by testing for moisture and alkalinity (pH).
1. Test in accordance with Section 090561.
2. Obtain instructions if test results are not within limits recommended by resilient flooring manufacturer and adhesive materials manufacturer.

3.02 PREPARATION

A. Prepare floor substrates for installation of flooring in accordance with Section 090561.

3.03 INSTALLATION - GENERAL

A. Starting installation constitutes acceptance of sub-floor conditions.

B. Install in accordance with manufacturer's written instructions.

C. Adhesive Applied Installation:
1. Spread only enough adhesive to permit installation of materials before initial set.
2. Fit joints and butt seams tightly.
3. Set flooring in place, press with heavy roller to attain full adhesion.

D. Where type of floor finish, pattern, or color are different on opposite sides of door, terminate flooring under centerline of door.

E. Install edge strips at unprotected or exposed edges, where flooring terminates, and where indicated.
1. Resilient Strips: Attach to substrate using adhesive.

F. Scribe flooring to walls, columns, cabinets, floor outlets, and other appurtenances to produce tight joints.

NOT FOR BIDDING

G. Install flooring in recessed floor access covers, maintaining floor pattern.

3.04 INSTALLATION - SHEET FLOORING

A. Lay flooring with joints and seams parallel to longer room dimensions, to produce minimum number of seams. Lay out seams to avoid widths less than 1/3 of roll width; match patterns at seams.

B. Cut sheet at seams in accordance with manufacturer's instructions.

C. Seal seams by heat welding.

3.05 INSTALLATION - TILE FLOORING

A. Mix tile from container to ensure shade variations are consistent when tile installed, unless otherwise indicated in manufacturer's installation instructions.

B. Lay flooring with joints and seams parallel to building lines to produce symmetrical pattern.

C. Install plank tile with a random offset of at least 6 inches from adjacent rows.

3.06 INSTALLATION - RESILIENT BASE

A. Fit joints tightly and make vertical. Maintain minimum dimension of 18 inches between joints.

B. Miter or scribe internal corners. At external corners, 'V' cut back of base strip to 2/3 of its thickness and fold. At exposed ends, use premolded units.

C. Install base on solid backing. Bond tightly to wall and floor surfaces.

3.07 INSTALLATION - STAIR COVERINGS

A. Install stair coverings in one piece for full width and depth of tread.

B. Adhere over entire surface. Fit accurately and securely.

3.08 CLEANING

A. Remove excess adhesive from floor, base, and wall surfaces without damage.

B. Clean in accordance with manufacturer's written instructions.

3.09 INITIAL MAINTENANCE OF TILE FLOORING

A. Provide initial sealing and polishing of resilient tile flooring, following manufacturer's published maintenance instructions.

B. Provide minimum 1 coat of sealer and 2 coats of initial polish immediately after installation, followed by minimum 4 more coats of polish after 5 days.

C. Protect flooring during all construction activities.

**END OF SECTION**

NOT FOR BIDDING

# SECTION 096566
# RESILIENT ATHLETIC FLOORING

## PART 1 GENERAL

1.01 SECTION INCLUDES

A. Rubber sheet flooring, adhesively installed.

B. Accessories.

1.02 RELATED REQUIREMENTS

A. Section 033000 - Cast-in-Place Concrete: Restrictions on curing compounds for concrete slabs and floors.

B. Section 090561 - Common Work Results for Flooring Preparation: Independent agency testing of concrete slabs, cleaning, and preparation.

C. Section 090561 - Common Work Results for Flooring Preparation: Concrete slab moisture and alkalinity testing and remediation procedures.

D. Section 096500 - Resilient Flooring.

1.03 REFERENCE STANDARDS

1.04 SUBMITTALS

A. Product Data: Manufacturer's printed data sheets for products specified.

B. Selection Samples: Manufacturer's color charts for flooring materials specified and game line paints, indicating full range of colors and textures available.

C. Verification Samples: Actual flooring material specified, not less than 12 inch square, mounted on solid backing.

1.05 QUALITY ASSURANCE

A. Installer Qualifications: An experienced installer certified in writing by the flooring manufacturer to be qualified for installation of specified flooring system.

1.06 DELIVERY, STORAGE, AND HANDLING

A. Deliver materials to project site in unopened containers clearly labeled with manufacturer's name and identification of contents.

B. Store materials in dry and clean location until needed for installation. During installation, handle in a manner that will prevent marring and soiling of finished surfaces.

1.07 FIELD CONDITIONS

A. Maintain temperature in spaces to receive adhesively installed resilient flooring within range of 70 to 95 degrees F for not less than 48 hours before the beginning of installation and for not less than 48 hours after installation has been completed. Subsequently, do not allow temperature in installed spaces to drop below 50 degrees F or to go above 100 degrees F.

## PART 2 PRODUCTS

2.01 PREFORMED ATHLETIC FLOORING

A. RUBBER GYM FLOOR, Typr RGF-1: Prefabricated resilient rubber athletic flooring, calendered and vulcanized with a base of natural and synthetic rubbers, stabilizing agents and pigmentation.

1. Product: Phthalate-free, halogen-free, heavy metal-free, formaldehyde-free, isocyanate-free and BPA-free.

a. Sport Impact as manufactured by Mondo; www.mondousa.com.

NOT FOR BIDDING

b. Powerdek Fleck as manufactured by Connor Sports; www.connorsports.com.
2. Thickness: 0.25 inch (6 mm); wear layer: 0.125 inch (3 mm).
3. Roll width: 6 ft (1.86 m)
4. Colors: Selected from standard, solid background colors with random marbleization throughout wear layer.
5. Surface Texture: Smooth.
6. Manufactured in two layers which are vulcanized together. The shore hardness of the top layer will be greater than that of the other layers; shore hardness of layers to be recommended by the Manufacturer and the limits specified.
7. Substitutions: See Section 016000 - Product Requirements.

2.02 ACCESSORIES

A. Leveling Compound: Latex-modified cement formulation as recommended by flooring manufacturer for substrate conditions.

B. Flooring Adhesive: Waterproof; types recommended by flooring manufacturer.

**PART 3 EXECUTION**

3.01 EXAMINATION

A. Examine substrates for conditions detrimental to installation of athletic flooring. Proceed with installation only after unsatisfactory conditions have been corrected.

B. Verify that surfaces are flat to tolerances acceptable to flooring manufacturer, free of cracks that might telegraph through flooring, clean, dry and free of curing compounds, surface hardeners, and other chemicals that might interfere with bonding of athletic flooring to substrate.

C. Cementitious Sub-floor Surfaces: Verify that substrates are dry enough and ready for resilient flooring installation by testing for moisture and pH.
1. Test in accordance with Section 090561.
2. Obtain instructions if test results are not within limits recommended by resilient flooring manufacturer and adhesive materials manufacturer.

3.02 PREPARATION

A. Prepare floor substrates for installation of flooring in accordance with Section 090561.

3.03 INSTALLATION

A. Starting installation constitutes acceptance of sub-floor conditions.

B. Comply with manufacturer's recommendations.

C. Resilient Sheet Flooring:
1. Unroll flooring and allow to relax before beginning installation.
2. Mix adhesive thoroughly and apply to substrate with notched trowel. Roll flooring into fresh adhesive, overlapping end seams and double cutting, butting factory edges and compression fitting.
3. Roll entire flooring surface with steel roller to assure adhesion to substrate and eliminate air bubbles.
4. Immediately remove any adhesive from flooring surface, using chemical recommended by flooring manufacturer.
5. Weld seams using techniques and equipment recommended by manufacturer.
6. Lay out game lines using tape and taping machine approved by flooring manufacturer. Apply game line paint with roller, and allow to dry before removing tape.

NOT FOR BIDDING

7. Apply transparent top coat over flooring if recommended by manufacturer, to achieve a uniform finished appearance.

3.04 CLEANING

A. Clean flooring using methods recommended by manufacturer.

3.05 PROTECTION

A. Protect finished athletic flooring from construction traffic to ensure that it is without damage upon Date of Substantial Completion.

**END OF SECTION**

NOT FOR BIDDING

# SECTION 096616
# PRECAST CEMENT TERRAZZO TREADS AND LANDINGS

## PART 1 - GENERAL

1.01 SECTION INCLUDES

A. Precast Terrazzo Treads and Landings

B. Setting material, grouts, sealants and caulks

C. Installation of precast terrazzo stairs, base, sills, etc.

1.02 RELATED SECTIONS

A. Section 055100: Installation of steel stairs to receive precast terrazzo .

B. Section 093000: Installation of terrazzo tile by the thin-set method.

1.03 PRICE AND PAYMENT PROCEDURES

A. See Section 012300 - Alternates, for alternates affecting the work of this section.

1.04 REFERENCES

A. American Society for Testing and Materials (ASTM)

B. ASTM C-150

C. ASTM C-33

D. ASTM C-140

E. ASTM C-293

F. ASTM C-1028

G. National Terrazzo and Mosaic Association, Inc. (NTMA)

H. Federal Register Part III 28 CFR Part 36

1.05 SUBMITTALS

A. Submit in accordance with provisions of Section 00 1300.

B. Shop Drawings

1. Submit shop drawings of all precast terrazzo items showing detailed sections and profile for all precast items. Details shall show all reinforcing and special hardware for fastening.

C. Samples:

1. Submit samples, 6" x 6" size, for all colors.

D. Submit two copies of NTMA maintenance literature.

1.06 PERFORMANCE REQUIREMENTS:

A. Compressive Strength 4000 p.s.i.

B. Flexural Strength 600 p.s.i.

C. Certification: Suppliers shall furnish certification attesting that materials meet specification requirements.

1.07 QUALITY ASSURANCE

A. NTMA Standards: Comply with specified provisions and recommendations of the National Terrazzo & Mosaic Association, Inc. (NTMA).

NOT FOR BIDDING

B. Manufacturer's Instructions: In addition to specified requirements, comply with precast terrazzo manufacturer's instructions and recommendations for substrate preparation, materials storage, mixing and application, finishing and curing.

C. Qualifications: Precast Terrazzo Manufacturer and Trade Contractor must have a minimum of 5 years of successful experience on projects of similar magnitude and complexity to that indicated project.

1.08 DELIVERY, STORAGE AND HANDLING

A. Packaging and Shipping: Precast terrazzo to be palletized and shrink wrapped, delivered in original unopened packaging.

B. Storage and Protection: Precast terrazzo to be stored indoors, sheltered from moisture original packaging. Protect from damage by other trades.

1.09 WARRANTY

A. Manufacturer/Installer shall warrant installed system for a period of 2 years from date of substantial completion against failure of workmanship and material.

**PART 2 - PRODUCTS**

2.01 MANUFACTURERS

A. Basis of Design:
   1. Wausau Tile, Inc.

B. Substitutions will be considered under the provisions of Section 016000.
   1. Other manufacturer's shall comply with minimum levels of material specifications and detailing indicated on the drawings of specified herein.

2.02 MATERIALS

A. Portland Cement: ASTM C-150 Specifications for Portland Cement.

B. Aggregates: All aggregates to meet ASTM C-33 specifications, cleaned and properly graded to size. Aggregate shall be blended to meet individual project requirements.

C. Marble chips, size to conform with NTMA gradation standards.

D. Coloring; Pigments used shall be inorganic, resistant to alkalinity and used per manufacturer's recommendations.

E. Reinforcement and Hardware:
   1. To conform with NTMA and Manufacturer's design.
   2. Reinforce precast with deformed rods or wire mesh or both as recommended by precast terrazzo manufacturer.

F. Abrasive Inserts: Shall consist of silica sand and black epoxy, three lines.

G. Caulks & Sealants:
   1. Urethane or Polyurethane Sealant
   2. Color to be selected by Architect from manufacturers standard colors.

H. Cleaner: Liquid neutral chemical cleaner, with pH factor between 7 and 8, of formulation recommended by sealer manufacture for type of precast terrazzo used and complying with NTMA requirements.

I. Sealer: Colorless, slip and stain-resistant penetrating sealer with pH factor between 7 and 8, that does not affect color or physical properties of precast terrazzo surface. Flash point (ASTM D56): 80 degrees F, Minimum.

NOT FOR BIDDING

2.03 MANUFACTURED UNITS

A. Sizing Tolerances:
   1. All units to conform to shop drawings with a 1/16" tolerance in dimension.

B. Precast Surfaces and Edges:
   1. All exposed edges to be ground and polished with a minimum of 1/16" bevel.

C. All finished surfaces to be ground and polished, free of holes and to have overall uniformity in matrix and aggregate.

D. All precast terrazzo finished surfaces to be sealed with a sealer approved by manufacturer.

**PART 3 - EXECUTION**

3.01 INSPECTION

A. Examine areas to receive precast terrazzo for the following:
   1. Defects in existing work.
   2. Deviations beyond allowable tolerances for the substrate.
   3. Start work only when all defects have been corrected by others.

3.02 INSTALLATION

A. Setting:
   1. Set accurately as shown on approved shop drawings. Setting methods are:
      a. Thin Set
      b. Weld
      c. Bolt
   2. Alignment of precast should be straight and true to all dimensions and may not vary more than 1/8" in length, height or width.
   3. Install anchors as shown on details.
   4. Fill joints between with manufacturer -approved caulk or as specified.

3.03 PROTECTION

A. Protect the finished terrazzo work from damage by other trades.

B. Seal terrazzo finished surfaces with a sealer approved by manufacturer.

**END OF SECTION**

NOT FOR BIDDING

# SECTION 096633
# CEMENT TERRAZZO TILES

## PART 1 - GENERAL

1.01 SUMMARY

A. Types of terrazzo tile work included:
   1. Terrazzo tile floor tile.

B. Polishing and finishing maintenance materials

1.02 RELATED REQUIREMENTS

A. Section 033000 - Cast-In-Place Concrete: Substrate.

B. Section 090561 - Common Work Results for Flooring Preparation: Independent agency testing of concrete slabs, cleaning, and preparation.

C. Section 090561 - Common Work Results for Flooring Preparation: Concrete slab moisture and alkalinity testing and remediation procedures.

D. Section 093000 - Tiling: Setting materials.

E. Section 096616 - Precast terrazzo stair and base.

1.03 REFERENCES

A. American Society for Testing and Materials (ASTM)
   1. ASTM C-33
   2. ASTM C-140
   3. ASTM C-150
   4. ASTM C-293
   5. ASTM C-373
   6. ASTM C-482
   7. ASTM C-485
   8. ASTM C-499
   9. ASTM C-502
   10. ASTM C-609
   11. ASTM C-648
   12. ASTM C-650
   13. ASTM C-674
   14. ASTM C-1243
   15. ASTM C-1378

B. American National Standards Institute (ANSI)
   1. ANSI A108.1 thru A108.17
   2. ANSI A118.1 thru A118.15
   3. ANSI A137.1 section 9.6

C. National Terrazzo and Mosaic Association (NTMA)

D. Tile Council of North America (TCNA) Handbook - latest edition

1.04 QUALITY ASSURANCE

A. Setting and Grouting Materials: Provide materials obtained from one source for each type and color of grout and setting materials.

B. NTMA Standards: Comply with specified provisions and recommendations of NTMA.

C. TCNA Standards: Comply with specifications under the current Handbook for Tile Installation.

NOT FOR BIDDING

D. Manufacturer to supply written Terrazzo Tile Protocol, upon request.

1.05 DELIVERY, STORAGE, AND HANDLING

A. Packaging and Shipping: Terrazzo tile to be delivered in original unopened packaging with legible manufacturer identification including size, color, manufacture date and job number.

B. Storage and Protection: Terrazzo tile is to be stored indoors in a climate controlled environment, sheltered from moisture and in the original packaging. Tile must be protected from damage by other trades.

1.06 WARRANTY

A. Terrazzo tile flooring and accessories are warranted against product defects for two years from date of delivery.

**PART 2 - PRODUCTS**

2.01 MANUFACTURER

A. Basis of Design: Wausau Tile, Inc., as distributed by:
Wausau Tile, Inc.
9001 Business Hwy 51
Rothschild, WI. 54474
www.wausautile.com

B. Substitutions: See Section 01 6200 - Product Requirements.

2.02 MATERIALS

A. Portland Cement: ASTM C-150 specifications for Portland Cement

B. Aggregates: ASTM C-33
1. The aggregates used have a class shade range as per ASTM test C609 from V1 rating to V2 rating.

C. Coloring: Pigments used shall be inorganic, resistant to alkalinity, and used per manufacturer's recommendations.

D. Color Blending: The aggregates used have a natural color range. This can cause slight variances in overall color. Tiles should be blended at the job site from several cartons/pallets during installation.

E. Applied Initial Protectant:
1. Apply Scotchgard™ Stone Floor Protector to the terrazzo tile prior to packaging.

2.03 MANUFACTURED UNITS

A. Pressed Cement Terrazzo Tiles
1. Size:11-13/16" x 11-13/16" x 1/2" nominal, 7.0 lbs. (approx.)
2. TRF-1 through TRF-3: Wausau Tectura Designs

B. Chamfered face edges

C. Surfaces to be uniform in appearance and free of blemishes.

D. Color: AS NOTED ON FINISH SCHEDULE
1. If manufacturer other than the basis of design, is to provide custom color blends to match those identified for the basis of design identified on the drawings

E. Finish/Texture:
1. Factory Polish or Honed.
2. Back of tile: Ground flat and free from protrusions.

NOT FOR BIDDING

2.04 FABRICATION

A. Mechanically vibrated in molds.

B. Hydraulically pressed by 900-ton/3250 psi press.

C. Steam-cured with 100 percent humidity for 18 hours at 140 degrees F.

D. Factory finish: In-line back and face grinding.

E. Factory applied initial protectant.

F. Packaged and palletized.

2.05 SOURCE QUALITY CONTROL

A. Inspections at manufacturer:
   1. Documented inspection of terrazzo tile quality control tests.
   2. Testing is performed on the 7th day and the 28th day after the tile has been pressed.
      a. Compression - ASTM C140 > 8,000 psi
      b. Absorption - ASTM C 140 < 5%
      c. Flexural - ASTM C 293 > 1000 psi
      d. Specular Gloss Testing at 60 degrees - ASTM D523
      e. Stain testing / initial protection testing

B. Test Results
   1. Independent Test Lab completed and verified the following data:
      a. ASTM C373 Water Absorption - Passes (Semi-Vitreous)
      b. ASTM C482 Bond Strength - > 300 psi.
      c. ASTM C485 Warpage Edge +/- .001% or .002 in.
      d. ASTM C485 Warpage Diagonal +/- .003% or .010 in.
      e. ASTM C499 Nominal Size - range of .029 in.
      f. ASTM C499 Thickness range of .029 in.
      g. ASTM C502 Wedging +/- .023% or .028 in.
      h. ASTM C609 Color Uniformity - V1 - V2
      i. ASTM C648 Breaking Strength - > 500 lbf.
      j. ASTM C650 Resistance to Chemical Substance- not affected
      k. ASTM C674 Flexural properties - > 1000 psi.
      l. ASTM C1243 Deep Abrasion Wear - passes (meets p3 standards)
      m. ASTM C1378 Resistance to staining - not affected
      ANSI A137.1 Section 9.6.1 "Wet Dynamic Coefficient of Friction (DCOF)"
         1) Average Polished Finish = .46
         2) Average Honed Finish = .54

2.06 SETTING MATERIALS

A. Refer to Sectio 093000 - Tiling for setting materials.

**PART 3 - EXECUTION**

3.01 INSTALLATION

A. Refer to Section 093000 - Tiling for tile installation.

B. All installations of terrazzo tile shall comply with the appropriate Installation Method as depicted in the current edition of the Tile Council of North America Handbook for Ceramic, Glass, and Stone Tile Installation.

NOT FOR BIDDING

C. All materials used for installation of terrazzo tile must comply with the appropriate ANSI 118 and ISO 13007 standards and specifications.
   1. Setting materials manufacturer's printed installation instructions are to be followed in every instance.
   2. ANSI A-118.4 and ISO C2S1 mortars or better are recommended.

D. A minimum of 95 percent thin-set coverage is recommended on the back of the terrazzo tile. The corners of the tile must have good mortar support to prevent cracking. Back buttering is recommended to reach these requirements.

E. Appropriate ANSI A-108 installation specifications that correspond with the selected TCNA Installation Method are to be followed. This includes Substrate and Surface Inspections, Location and Frequency of EJ171 Movement Joint Guidelines, Placement Techniques, and Grouting Procedures.

F. Color Blending: Blend tiles at the job site from several cartons/pallets during installation.

G. Minimum grout joint width: 1/8 inch.

H. When using a heavy pigmented grout, use a grout release be applied prior to grouting. Test area to ensure the grout release was adequately applied.

I. If a slight grout haze occurs, remove using 3M™ Eraser Pad 3600 Pink pad with water and 3M™ Neutral Cleaner.

J. If a more difficult stain occurs, use a Scotch-Brite™ Doodlebug™ Easy Erasing Pad 4610 with water and 3M™ Neutral Cleaner.

3.02 CLEANING

A. Dust mop or vacuum to remove sand, dust and other contaminants off the surface

B. Damp mop lightly soiled floors with Neutral Cleaner per the manufacture's recommendations.

C. For more aggressive cleaning use a mechanical buffer or auto scrubber along with a 3M™ Red Buffer Pad 5100 and Neutral Cleaner per the manufacturer's recommendations.
   1. For cleaning combined with light polishing, the Scotch-Brite™ Purple Diamond Pad Plus may be used on an auto scrubber.

D. Clean up all spills immediately.
   1. If a stain occurs, see manufacturer's technical bulletin titled Repair of Etch or Stained Terrazzo Tiles to assist with the repair.
   2. Do not use acidic cleaners, cleaners that contain citrus (d-limonene), 2-butoxyethanol (butyl cellusolve), amine based cleaners, isopropyl alcohol, solvent based cleaners, degreasers, or non-neutral cleaners
   3. Do not use spray buff products or chemical dust mop treatments.

**END OF SECTION**

NOT FOR BIDDING

# SECTION 096700
# SEAMLESS FLOORING

## PART 1 GENERAL

1.01 SECTION INCLUDES

A. Fluid-applied flooring and base.

1.02 RELATED REQUIREMENTS

A. Section 079200 - Joint Sealants: Sealing joints between fluid-applied flooring and adjacent construction and fixtures.

B. Section 093000 - Tiling: Mortar bed substrate for resinous flooring inwalk-in coves.

C. Section 090561 - Common Work Results for Flooring Preparation: Floor cleaning and preparation.

D. Section 090561 - Common Work Results for Flooring Preparation: Concrete slab moisture and alkalinity testing and remediation procedures.

1.03 PRICE AND PAYMENT PROCEDURES

A. See Section 012300 - Alternates, for alternates affecting the work of this section.

1.04 REFERENCE STANDARDS

A. ASTM D570 - Standard Test Method for Water Absorption of Plastics; 1998 (Reapproved 2010).

B. ASTM D638 - Standard Test Method for Tensile Properties of Plastics; 2014.

C. ASTM D 695 - Standard Test Method for Compressive Properties of Rigid Plastics; 2008.

D. ASTM D905 - Standard Test Method for Strength Properties of Adhesive Bonds in Shear by Compression Loading; 2008 (Reapproved 2013).

E. ASTM D4060 - Standard Test Method for Abrasion Resistance of Organic Coatings by the Taber Abraser; 2014.

F. ASTM E96/E96M - Standard Test Methods for Water Vapor Transmission of Materials; 2014.

G. ASTM E648 - Standard Test Method for Critical Radiant Flux of Floor-Covering Systems Using a Radiant Heat Energy Source; 2014c.

H. ASTM F710 - Standard Practice for Preparing Concrete Floors to Receive Resilient Flooring; 2011.

1.05 SUBMITTALS

A. Product Data: Provide data on specified products, describing physical and performance characteristics; sizes, patterns and colors available.

B. Samples for verification: Submit two samples, 4 x 4 inch in size illustrating color and pattern for each floor material for each color specified.

C. Manufacturer's Installation Instructions: Indicate special procedures.

D. Applicator's Qualification Statement.

E. Maintenance Data: Include maintenance procedures, recommended maintenance materials, procedures for stain removal, repairing surface, and suggested schedule for cleaning.

1.06 QUALITY ASSURANCE

A. Manufacturer Qualifications: Company specializing in manufacturing products specified in this section with minimum five years documented experience.

NOT FOR BIDDING

B. Applicator Qualifications: Company specializing in performing the work of this section.
   1. Minimum five years of documented experience.
   2. Approved by manufacturer.

C. Supervisor Qualifications: Trained by product manufacturer, under direct full time supervision of manufacturer's own foreman.

1.07 MOCK UP

A. Construct mock-up(s) of fluid applied flooring to serve as basis for evaluation of texture and workmanship.
   1. Number of Mock-Ups to be Prepared: One per product type.
   2. Use same materials and methods for use in the work.
   3. Locate where directed.

B. Obtain approval of mock-up by Architect before proceeding with work.

C. Approved mock-up may remain as part of the Work.

1.08 DELIVERY, STORAGE, AND HANDLING

A. Store resin materials in a dry, secure area.

B. Store materials for three days prior to installation in area of installation to achieve temperature stability.

1.09 FIELD CONDITIONS

A. Maintain minimum temperature in storage area of 55 degrees F.

B. Store materials in area of installation for minimum period of 24 hours prior to installation.

C. Maintain ambient temperature required by manufacturer 72 hours prior to, during, and 24 hours after installation of materials.

**PART 2 PRODUCTS**

2.01 FLUID-APPLIED FLOORING SYSTEMS

A. Seamless Flooring and Base
   1. Physical Characteristics:
      a. Critical Radiant Flux: Minimum of 0.22 watts/sq cm, when tested in accordance with ASTM E 648.
      b. Tensile Strength: 1,000 psi, when tested in accordance with ASTM D 638.
      c. Compressive Strength: 5,000 psi (34.45 MPa) , when tested in accordance with ASTM C 579.
      d. Abrasion Resistance: Maximum weight loss of.03 g/1000 cycles, when tested in accordance with ASTM D 4060.
      e. Impact Resistance: >160 in/lb; no cracking, chipping or delamination, when tested with Gardner Impact Tester.
   2. Manufacturers and Products
      a. Type RF-1:
         1) Stonhard; Product: Stontec UTF: www.stonhard.com
            (a) 2mm urethane flake broadcast flooring system with integral cove base where noted
            (b) Primer as required by manufacturer.
            (c) Undercoat: A three-component, polyaspartic urethane resin, aliphatic isocyanate and filler.
            (d) Aggregate: Brightly colored, quartz broadcast aggregate

NOT FOR BIDDING

(e) Color Flake Broadcast Layer: Brightly colored vinyl flakes.
(f) Sealer: Stonseal CA7, a two-component, UV resistant, aliphatic polyaspartic urethane sealer.

2) Crossfield Dex-O-Tex Tek Crete SLCF

b. Manufacturers and products Type RF-2:

1) Stonhard; Product: Stonshield UTS: www.stonhard.com
(a) self-priming, textured, four-component, polyurethane mortar and broadcast system consisting of a urethane-urea binder, pigments, powders and quartz aggregates
(b) Thickness: nominal 1/4 in. (6 mm).
(c) Mortar: Stonclad UT, four-component multi-functional urethane urea slurry.
(d) Aggregate: brightly colored quartz broadcast aggregate.
(e) Color Flake Broadcast Layer: Brightly colored vinyl flakes.
(f) Undercoat and Sealer: Stonseal CA7, a two-component, UV resistant, aliphatic polyaspartic urethane sealer..

2) Crossfield Dex-O-Tex Tek Crete SLCQ

2.02 ACCESSORIES

A. Divider Strips: Zinc, 1/8 inch thick, height to match flooring thickness, with anchoring features; color as selected.

B. Control Joint Strips: Match divider strips; 1/8 inch nominal width, 1/8 inch wide neoprene filler strip between side strips, with anchoring features, strip height to suit flooring thickness.

C. Base Caps: Zinc with projecting base of 1/8 inch; color as selected from manufacturer's standard range.

D. Subfloor Filler: type recommended by flooring material manufacturer.

E. Primer: Type recommended by fluid-applied flooring manufacturer.

**PART 3 EXECUTION**

3.01 EXAMINATION

A. Verify that subfloor surfaces are smooth and flat within the tolerances specified for that type of work and are ready to receive flooring.

B. Verify that wall surfaces are smooth and flat within the tolerances specified for that type of work, are dust free, and are ready to receive flooring.

C. Verify that subfloor surfaces are dust-free and free of substances that could impair bonding of materials to subfloor surfaces.

D. Cementitious Subfloor Surfaces: Verify that substrates are ready for fluid-applied flooring installation by testing for moisture and alkalinity (pH).

1. Test in accordance with Section 090561.
2. Obtain instructions if test results are not within limits recommended by fluid-applied flooring manufacturer.
3. Follow moisture and alkalinity remediation procedures in Section 090561.

E. Verify that required floor-mounted utilities are in correct location.

3.02 PREPARATION

A. Remove subfloor ridges and bumps. Fill low spots, cracks, joints, holes, and other defects with subfloor filler.

NOT FOR BIDDING

B. Apply, trowel, and float filler to achieve smooth, flat, hard surface. Grind irregularities above the surface level. Prohibit traffic until filler is cured.

C. Vacuum clean substrate.

D. Apply primer to surfaces required by flooring manufacturer.

3.03 INSTALLATION - ACCESSORIES

A. Accurately saw cut substrate to install divider strips.

B. Install strips straight and level to locations indicated.

C. Install fillet strips at base of walls where flooring is to be extended up wall as base.

D. Install terminating cap strip at top of base; attach securely to wall substrate.

3.04 INSTALLATION - FLOORING

A. Apply in accordance with manufacturer's instructions.

B. Apply each coat to minimum thickness required by manufacturer.

C. Finish to smooth level surface.

D. Mortar: Mix mortar material according to manufacturer's recommended procedures. Uniformly spread mortar over substrate at manufacturer's recommended height using specially designed trowel and or Screed box.

E. Undercoat: Remove any surface irregularities by lightly abrading and vacuuming the floor surface. Mix and apply undercoat with strict adherence to manufacturer's installation procedures and coverage rates.

F. Broadcast: Immediately broadcast quartz silica aggregate into the undercoat using manufacturer's specially designed spray hopper. Strict adherence to manufacturer's installation procedures and coverage rates is imperative.

G. Apply topcoat in number of coats indicated for flooring system and at spreading rates recommended in writing by manufacturer.

H. Cove at vertical surfaces. Base height: 6" unless otherwise indicated.

3.05 TERMINATIONS

A. Chase edges to "lock" the flooring system into the concrete substrate along lines of termination.

B. Penetration Treatment: Lap and seal the flooring system onto the perimeter of the penetrating item by bridging over compatible elastomer at the interface to compensate for possible movement.

C. Trenches: Continue flooring system into trenches to maintain monolithic protection. Treat cold joints to assure bridging of potential cracks.

D. Treat floor drains by chasing the flooring system to lock in place at point of termination.

3.06 JOINTS AND CRACKS

A. Treat control joints to bridge potential cracks and to maintain monolithic protection.

B. Treat cold joints and construction joints to bridge potential cracks and to maintain monolithic protection on horizontal and vertical surfaces as well as horizontal and vertical interfaces.

C. Discontinue floor coating system at vertical and horizontal contraction and expansion joints by installing backer rod and compatible sealant after coating installation is completed. Provide sealant type recommended by manufacturer for traffic conditions and chemical exposures to be encountered.

NOT FOR BIDDING

3.07 PROTECTION

A. Prohibit traffic on floor finish for 48 hours after installation.

B. Barricade area to protect flooring until fully cured.

**END OF SECTION**

NOT FOR BIDDING

# SECTION 096813
# TILE CARPETING

## PART 1 GENERAL

1.01 SECTION INCLUDES

A. Carpet tile, fully adhered.

1.02 RELATED REQUIREMENTS

A. Section 033000 - Cast-in-Place Concrete: Restrictions on curing compounds for concrete slabs and floors.

B. Section 090561 - Common Work Results for Flooring Preparation: Independent agency testing of concrete slabs, cleaning, and preparation.

C. Section 090561 - Common Work Results for Flooring Preparation: Concrete slab moisture and alkalinity testing and remediation procedures.

D. Section 096816 - Sheet Carpeting: Broadloom carpet.

1.03 REFERENCE STANDARDS

A. ASTM D2859 - Standard Test Method for Ignition Characteristics of Finished Textile Floor Covering Materials; 2006 (Reapproved 2011).

B. ASTM E648 - Standard Test Method for Critical Radiant Flux of Floor-Covering Systems Using a Radiant Heat Energy Source; 2014c.

C. CRI 104 - Standard for Installation of Commercial Carpet; 2015.

D. CRI (GLP) - Green Label Plus Testing Program - Certified Products; www.carpet-rug.org; current edition.

E. NFPA 253 - Standard Method of Test for Critical Radiant Flux of Floor Covering Systems Using a Radiant Heat Energy Source; 2015.

1.04 SUBMITTALS

A. Product Data: Provide data on specified products, describing physical and performance characteristics; sizes, patterns, colors available, and method of installation.

B. Samples: Submit two carpet tiles illustrating color and pattern design for each carpet color selected.

C. Manufacturer's Installation Instructions: Indicate special procedures.

D. Maintenance Data: Include maintenance procedures, recommended maintenance materials, and suggested schedule for cleaning.

E. Maintenance Materials: Furnish the following for Owner's use in maintenance of project.

1. See Section 016000 - Product Requirements, for additional provisions.

Extra Carpet Tiles: Quantity equal to 5 percent of total installed of each color and pattern installed.

1.05 QUALITY ASSURANCE

A. Manufacturer Qualifications: Company specializing in manufacturing specified carpet tile with minimum three years documented experience.

B. Installer Qualifications: Company specializing in installing carpet tile with minimum three years documented experience and approved by carpet tile manufacturer.

NOT FOR BIDDING

1.06 FIELD CONDITIONS

A. Store materials in area of installation for minimum period of 24 hours prior to installation.

**PART 2 PRODUCTS**

2.01 MATERIALS

A. Carpet Tile Type CT-1: Tufted, manufactured in one color dye lot.
   1. Manufacturer: Tandus Centiva
   2. Product: Nova.
   3. Tile Size: 24 x 24 inch, nominal.
   4. Pile Thickness: 0.083 inch.
   5. Dye method: 100% solution dyed.
   6. Color: as indicated.
   7. Critical Radiant Flux: Minimum of 0.22 watts/sq cm, when tested in accordance with ASTM E648 or NFPA 253.
   8. Surface Flammability Ignition: Pass ASTM D2859 (the "pill test").
   9. Primary Backing Material: Synthetic non-woven.
   10. Secondary Backing Material: Modular.
   11. Face Weight: 14 oz/sq yd.

B. Carpet Tile Type CT-2, CT-3: Tufted, manufactured in one color dye lot.
   1. Product: Relic and Memento manufactured by Mannington.
   2. Tile Size: 12 x 48 inch, nominal.
   3. Pile Thickness: 0.114 inch.
   4. Dye method: 100% solution dyed.
   5. Color: as indicated.
   6. Critical Radiant Flux: Minimum of 0.45 watts/sq cm, when tested in accordance with ASTM E 648 or NFPA 253.
   7. Surface Flammability Ignition: Pass ASTM D 2859 (the "pill test").
   8. Primary Backing Material: Modular.
   9. Weight: 20 oz/sq yd.

C. Textile Composite Floor (TCT-1):
   1. Manufacturers:
      a. J+J Flooring; Kinetex
      b. Substitutions: See Section 016000 - Product Requirements.
   2. Critical Radiant Flux (CRF): Minimum 0.45 watt per square centimeter, when tested in accordance with ASTM E648 or NFPA 253.
   3. Dye method: Solution dyed.
   4. Size: 18 by 36 inch.
   5. Weight: 4.5 oz - 5.2 oz/square ft
   6. Color: as selected.

2.02 ACCESSORIES

A. Sub-Floor Filler: White premix latex; type recommended by flooring material manufacturer.

B. Edge Strips: Rubber, color as selected.

C. Adhesives:
   1. Compatible with materials being adhered; maximum VOC content of 50 g/L; CRI (GLP) certified; in lieu of labeled product, independent test report showing compliance is acceptable.

NOT FOR BIDDING

**PART 3 EXECUTION**

3.01 EXAMINATION

A. Verify that subfloor surfaces are smooth and flat within tolerances specified for that type of work and are ready to receive carpet tile.

B. Verify that subfloor surfaces are dust-free and free of substances that could impair bonding of adhesive materials to subfloor surfaces.

C. Cementitious Subfloor Surfaces: Verify that substrates are ready for flooring installation by testing for moisture and alkalinity (pH).
   1. Test in accordance with Section 090561.

D. Verify that required floor-mounted utilities are in correct location.

3.02 PREPARATION

A. Prepare floor substrates for installation of flooring in accordance with Section 090561.

3.03 INSTALLATION

A. Starting installation constitutes acceptance of sub-floor conditions.

B. Install carpet tile in accordance with manufacturer's instructions.

C. Blend carpet from different cartons to ensure minimal variation in color match.

D. Cut carpet tile clean. Fit carpet tight to intersection with vertical surfaces without gaps.

E. Lay carpet tile in square pattern, with pile direction alternating to next unit, set parallel to building lines, unless otherwise indicated.

F. Locate change of color or pattern between rooms under door centerline.

G. Fully adhere carpet tile to substrate.

H. Trim carpet tile neatly at walls and around interruptions.

I. Complete installation of edge strips concealing exposed edges.

3.04 CLEANING

A. Remove excess adhesive without damage, from floor, base, and wall surfaces.

B. Clean and vacuum carpet surfaces.

**END OF SECTION**

NOT FOR BIDDING

# SECTION 096816
# SHEET CARPETING

## PART 1 GENERAL

1.01 SECTION INCLUDES

A. Carpet, direct-glued.

B. Accessories.

1.02 RELATED REQUIREMENTS

A. Section 033000 - Cast-in-Place Concrete: Restrictions on curing compounds for concrete slabs and floors to receive adhesive-applied carpet.

B. Section 090561 - Common Work Results for Flooring Preparation: Independent agency testing of concrete slabs, removal of existing floor coverings, cleaning, and preparation.

C. Section 096813 - Tile Carpeting.

1.03 REFERENCE STANDARDS

A. ASTM D2859 - Standard Test Method for Ignition Characteristics of Finished Textile Floor Covering Materials; 2006 (Reapproved 2011).

B. ASTM E648 - Standard Test Method for Critical Radiant Flux of Floor-Covering Systems Using a Radiant Heat Energy Source; 2014c.

C. CRI 104 - Standard for Installation of Commercial Carpet; 2015.

D. CRI (GL) - Green Label Testing Program - Certified Products; Current Edition.

E. NFPA 253 - Standard Method of Test for Critical Radiant Flux of Floor Covering Systems Using a Radiant Heat Energy Source; 2015.

1.04 SUBMITTALS

A. See Section 013000 - Administrative Requirements, for submittal procedures.

B. Product Data: Provide data on specified products, describing physical and performance characteristics; sizes, patterns, colors available, and method of installation.

C. Samples: Submit two samples 24 by 24 inch in size illustrating color and pattern for each carpet material specified.

D. Maintenance Data: Include maintenance procedures, recommended maintenance materials, and suggested schedule for cleaning.

E. Maintenance Materials: Furnish the following for Owner's use in maintenance of project.

1. See Section 016000 - Product Requirements, for additional requirements.
   Extra Carpet: 100 sq ft of each type, color, and pattern installed.

1.05 QUALITY ASSURANCE

A. Manufacturer Qualifications: Company specializing in manufacturing specified carpet with minimum three years documented experience.

B. Installer Qualifications: Company specializing in installing carpet with minimum three years documented experience.

1.06 FIELD CONDITIONS

A. Store materials in area of installation for minimum period of 24 hours prior to installation.

B. Maintain minimum 70 degrees F ambient temperature 24 hours prior to, during and 24 hours after installation.

NOT FOR BIDDING

C. Ventilate installation area during installation and for 72 hours after installation.

**PART 2 PRODUCTS**

2.01 CARPET

A. Carpet, Type BC-1:
1. Product: Wavelength manufactured by Mohawk.
2. Roll Width: 12 ft.
3. Color: as indicated.
4. Pattern: as indicated.
5. Critical Radiant Flux: Minimum of 0.22 watts/sq cm, when tested in accordance with ASTM E648 or NFPA 253.
6. Surface Flammability Ignition: Pass ASTM D2859 (the "pill test").
7. Gage: 1/12 inch.
8. Stitches: 9.7 per inch.
9. Dye Method: Solution Dyed / Yarn Dyed
10. Pile Weight: 20.0 oz/sq yd.
11. Substitutions: See Section 016200 - Product Requirements.

2.02 ACCESSORIES

A. Sub-Floor Filler: Type recommended by carpet manufacturer.

B. Adhesives:
1. Compatible with materials being adhered; maximum VOC content of 50 g/L; CRI (GL) certified.

C. Seam Adhesive: Recommended by carpet manufacturer.

D. Carpet Adhesive: Recommended by carpet manufacturer.

**PART 3 EXECUTION**

3.01 EXAMINATION

A. Verify that subfloor surfaces are smooth and flat within the tolerances specified for that type of work and are ready to receive carpet.

B. Verify that wall surfaces are smooth and flat within the tolerances specified for that type of work, are dust-free, and are ready to receive carpet.

C. Verify that subfloor surfaces are dust-free and free of substances that could impair bonding of adhesives to subfloor surfaces.

D. Cementitious Subfloor Surfaces: Verify that substrates are ready for flooring installation by testing for moisture and alkalinity (pH).
1. Test in accordance with Section 090561.
2. Obtain instructions if test results are not within limits recommended by flooring material manufacturer and adhesive materials manufacturer.
3. Follow moisture and alkalinity remediation procedures in Section 090561.

E. Verify that required floor-mounted utilities are in correct location.

3.02 PREPARATION

A. Prepare floor substrates for installation of flooring in accordance with Section 090561.

3.03 INSTALLATION - GENERAL

A. Starting installation constitutes acceptance of sub-floor conditions.

NOT FOR BIDDING

B. Install carpet in accordance with manufacturer's instructions and CRI 104 (Commercial).

C. Verify carpet match before cutting to ensure minimal variation between dye lots.

D. Lay out carpet and locate seams in accordance with shop drawings.
   1. Locate seams in area of least traffic, out of areas of pivoting traffic, and parallel to main traffic.
   2. Do not locate seams perpendicular through door openings.
   3. Align run of pile in same direction as anticipated traffic and in same direction of adjacent pieces.
   4. Locate change of color or pattern between rooms under door centerline.
   5. Provide monolithic color, pattern, and texture match within any one area.

E. Install carpet tight and flat on subfloor, well fastened at edges, with a uniform appearance.

3.04 DIRECT-GLUED CARPET

A. Double cut carpet seams, with accurate pattern match. Make cuts straight, true, and unfrayed. Apply seam adhesive to cut edges of woven carpet immediately.

B. Apply contact adhesive to floor uniformly at rate recommended by manufacturer. After sufficient open time, press carpet into adhesive.

C. Apply seam adhesive to the base of the edge glued down. Lay adjoining piece with seam straight, not overlapped or peaked, and free of gaps.

D. Roll with appropriate roller for complete contact of adhesive to carpet backing.

E. Trim carpet neatly at walls and around interruptions.

3.05 INSTALLATION ON STAIRS

A. Use one piece of carpet for each tread and the riser below. Apply seam adhesive to all cut edges.

B. Install carpet with pile direction in the length of the stair.

C. Adhere carpet tight to stair treads and risers.

3.06 CLEANING

A. Remove excess adhesive from floor and wall surfaces without damage.

B. Clean and vacuum carpet surfaces.

**END OF SECTION**

NOT FOR BIDDING

# SECTION 098400
# ACOUSTIC ROOM COMPONENTS

## PART 1 GENERAL

1.01 SECTION INCLUDES

A. Fabric-covered fiberglass core panels and mounting accessories.

B. Barrel Shaped Ceiling Diffusers.

1.02 RELATED REQUIREMENTS

A. Section 061000 - Rough Carpentry

B. Section 062000 - Finish Carpentry

C. Section 095100 - Acoustical Ceilings and Suspension Systems

D. Section 099000 - Paints and Coatings

1.03 SUBMITTALS

A. Product Data: Manufacturer's printed data sheets for products specified.

1. Provide manufacturer's product specifications and installation instructions for acoustical panels and attachment system. Include manufacturer's recommendations for cleaning the fabric on all the acoustical panels, including precautions against materials and methods that may be detrimental to finishes and acoustical performance.

B. Shop Drawings: Fabrication and installation details, panel layout, and fabric orientation. Shop drawings shall indicate at large scale, all locations of acoustical panels. Submit profiles, sizes and reinforcing and anchorage devices, for securing to adjacent materials.

C. Submit certificate of compliance to specified acoustical and fire performance criteria, signed by an officer of the panel manufacturer and attach independent laboratory test results for each product used, showing that the products supplied as components and complete assemblies, meet or exceed the specified requirements.

D. Selection Samples: Manufacturer's color charts for fabric covering, indicating full range of fabrics, colors, and patterns available.

E. Verification Samples: Fabricated samples of each type of panel specified; 24 by 24 inch, showing construction, edge details, and fabric covering, with exposed color and texture and mounting clip and trim to be expected in completed work.

F. Submit samples of all different types of mounting devices, extrusions, etc. for use in this project.

G. Test Reports: Certified test data from an independent test agency verifying that panels meet specified requirements for acoustical and fire performance.

1.04 QUALITY ASSURANCE

A. Manufacturer Qualifications: Company with not less than 5 years of experience in manufacturing acoustical products similar to those specified.

B. Installation by firm with not less than three years of successful experience in installation of acoustical panels similar to requirements for this project. The installing contractor shall shall have a written document signed by the manufacturer verifying manufacturer's approval of the referenced contractor to install the acoustical products that are the responsibilty of that contractor.

C. Provide acoustical panels which have been tested, rated and labeled by U.L. for indicated ratings as listed in "Classification Building Materials Index" by U.L.

NOT FOR BIDDING

1. Fire Performance Characteristics: Provide acoustic wall panels with surface-burning characteristics as determined by testing panel components in accordance with ASTM E84 test procedures
   a. ASTM E-84 Classification Class "A" or "1"
   b. Flame Spread: 25 or less
   c. Smoke Developed: 450 or less

D. Acoustical Performance Characteristics: Provide acoustic wall panels with acoustical absorption characteristics as indicated in Part 2, which have been determined by testing fully assembled production material in accordance with ASTM C 423 (Type "A" mounting as defined by ASTM E-795) by a testing organization acceptable to authorities having jurisdiction.

E. All fabric finishes specified for acoustic panels shall be tested in accordance with ASTM D6207 - Standard Test Method for Dimensional Stability of Fabrics to Changes in Humidity and Temperature

F. All acoustical wall and ceiling panels of the same type shall be purchased from a single supplier.

1.05 WARRANTY

A. Written guarantee that panels are constructed in accordance with the acoustical laboratory tested product and will be free of defects in material and workmanship for a period of one year after installation.

B. Provide warranty above for a period of five years for acoustic room components.

1.06 DELIVERY, STORAGE, AND HANDLING

A. Protect acoustical panels from moisture during shipment, storage, and handling. Deliver in factory-wrapped bundles; do not open bundles until panels are needed for installation, cartoned or crated to provide protection during transit and job storage, properly tagged and identified.

B. Inspect acoustical panels upon delivery for damage. Minor damages may be repaired provided refurbished items are equal in all respects to new work and acceptable to Architect; otherwise, remove and replace damaged items as directed.

C. Store panels flat, in dry, well-ventilated space; do not stand panels on end. Protect products from damage that may be caused by exposure to water, moisture, chemicals, direct sunlight, or infestation.

D. Protect panel edges from damage. On site storage shall be such as to assure that all panels and associated materials are protected from damage, and storage area is climatically controlled to normal operational levels.

E. Comply with manufacturer's recommendations.

1.07 PROJECT CONDITIONS

A. Project Environmental Requirements: Prior to unpacking or installing, ensure that the installation area is fully enclosed and protected from moisture and direct sunlight. Ensure that the building's mechanical systems are fully operational and will not be turned off again even for testing and balancing of the mechanical systems. Coordinate with other trades to ensure that all work above or behind surfaces is complete and that all wet and dusty trades have completed work.

B. Product Acclimatization: If recommended by manufacturer, allow both the installation area and the components to stabilize in temperature and humidity levels that are representative of the

NOT FOR BIDDING

final temperature and humidity levels expected after building completion and occupation following manufacturer's instructions. Do not install products if the humidity exceeds 65%.

**PART 2 PRODUCTS**

2.01 MANUFACTURERS

A. Fabric-Covered Acoustical Panels:
   1. Basis of Design: Conwed: Ladysmith, WI 800-932-2383 www.conwed.com.
   2. Golterman & Sabo: www.gsacoustics.com
   3. Armstrong World Industries, Inc., Lancaster, PA 717-397-0611: www.armstrong.com
   4. Decoustics Limited: www.decoustics.com, P.O. Box 615, Getzville, NY,14068-0615 (800)387-3809
   5. Kinetics Noise Control, Interiors Division, Dublin, OH 614-889-0480: www.kineticsnoise.com
   6. AVL Systems, Inc., 5540 SW 6th Place, Ocala, FL 34474: www.AVLonline.com
   7. Substitutions: See Section 016000 - Product Requirements.

B. Barrel Ceiling Sound Diffuser Panels:
   1. Basis of Design: Barrel Ceiling Diffuser Panels by Acoustical Solutions Inc., 2420 Grenoble Road, Richmond, VA 23294 804-346-8355 www.acousticalsolutions.com
   2. Kinetics Noise Control, Interiors Division, Dublin, OH 614-889-0480 www.kineticsnoise.com
   3. RPG Diffuser Systems, Inc., 651-C Commerce Drive, Upper Marlboro, MD 20774 301-249-0044 www.rpginc.com
   4. AVL Systems, Inc., 5540 SW 6th Place, Ocala, FL 34474: www.AVLonline.com
   5. Substitutions: See Section 016000 - Product Requirements.

2.02 FABRIC-COVERED ACOUSTICAL PANELS

A. Materials, Glass Fiber Core Panels - Middle School Cafeteria and Gymnasium:
   1. IR Series, Conwed Design; 2 inch thickness,unless otherwise noted.
   2. Glass-fiber board core, 6 to 7 lb/cu. ft. density.
   3. Tackable, impact-resistant, high-density face layer: 1/8 inch thick layer molded glass-fiberboard with min. density of 16 to 18 lb/cu. ft.
   4. Edges: Beveled.
   5. Fabric; Guilford of Maine.

B. Materials, Glass Fiber Core Panels - Auditorium and Rehearsal Rooms:
   1. Respond RS Series,Conwed Design; 2 inch thickness,unless otherwise noted.
   2. Edges shall be chemically hardened to withstand moderate impact during installation and ongoing maintenance. Chemically hardened edges will be profiled as shown on the architectural drawings.
   3. The panel shall be constructed of 6 to 7 lb./cu.ft (96 to 112 kg/cu.m.) density acoustically absorptive core of 1" (25mm), 1 ½" (38mm), 2" (50mm), 3" (75mm), or 4" (100mm) thickness, and finished as detailed in this section, as indicated, and scheduled. Panels shall be tackable.
   4. Core shall be free of surface defects and sanded as required to a uniform thickness, which will not vary by more than +/- 0.03" (1.0mm).
   5. Panel core dimensions shall be accurate to a tolerance of +/- 0.06" (1.6mm).
   6. Fabric finish shall be bonded to or stretch applied over the panel face, bonded to the panel edges and returned a minimum of one inch (25mm) on the back of the panel. The finish shall be flat and wrinkle free and fully tailored at corners with no exposed darting. All

NOT FOR BIDDING

finishes shall be tested for suitability (ASTM D6207) and approved for use by the panel manufacturer prior to procurement and fabrication.

7. Acoustical performance: Noise Reduction Coefficient (NRC): Per the below table when tested in accordance with ASTM C423 for Type A mounting, per ASTM E795. Panels shall have noise reduction coefficient values of the following when tested using an acoustically transparent fabric.

| Panel | | | Frequency (Hz) | | | | | | |
|---|---|---|---|---|---|---|---|---|---|
| Type | Thickness | Finish | 125 | 250 | 500 | 1000 | 2000 | 4000 | NRC |
| A | 1" (25mm) | Fabric | 0.03 | 0.42 | 0.91 | 1.08 | 1.06 | 0.98 | 0.85 |
| A | 2" (50mm) | Fabric | 0.31 | 0.94 | 1.12 | 1.07 | 1.03 | 1.00 | 1.05 |
| A | 3" (75mm) | Fabric | 0.31 | 1.13 | 1.36 | 1.30 | 1.24 | 1.2[illegible] | 1.25 |
| A | 4" (100mm) | Fabric | 0.46 | 1.21 | 1.40 | 1.31 | 1.24 | 1.24 | 1.30 |

8. Mounting: Installation shall be either by use of slide and engage clips ("Z"-clips), either into a DWC-7 anti-rattle wall clip or into continuous wall track. Panel clips (DPC-3) and wall clips (DWC-7 or continuous wall track)) shall be a minimum 20 gauge satin-coat steel with wall clips mechanically mounted to the back of the panels. All fasteners (wall anchors, screws, adhesive, etc.) are to be supplied by the installing contractor.
9. Finish: Fabric Covering: Seamless fabric facing material, for stretched covering of core material, selected by Architect.
   a. Patterns: Where fabric with directional or repeating patterns or fabric with directional weave is used, mark for installation in same direction.

2.03 BARREL CEILING SOUND DIFFUSER PANELS

A. Materials:
   1. One-piece rigid E-glass
   2. Panel Shape and Size: As scheduled and indicated.
   3. Mounting: Suitable for support by heavy-duty T-bar ceiling suspension system.

B. Finish: Fabric wrapped, color as selected by Architect.

C. Location: Rehearsal Room.

2.04 FABRICATION OF FABRIC-COVERED ACOUSTICAL PANELS

A. Fabric Wrapped, General: Fabricate panels to sizes and configurations indicated, with fabric facing installed without sagging, wrinkles, blisters, or visible seams.
   1. For panels suspended from ceiling, provide fabric covering both sides, with seams only at panel edges.

B. Tolerances: Fabricate to finished tolerance of plus or minus 1/16 inch (1.6 mm) for thickness, overall length and width, and squareness from corner to corner.

2.05 ACCESSORIES

A. Fabric Wrapped Acoustical Wall Units:
   1. Back-Mounting Accessories: Manufacturer's standard accessories for concealed support for each panel type, designed to allow panel removal, and as follows:
      a. Two-part clip and base-support bracket or rail system; brackets or rails designed to support full weight of panels and clips designed for lateral support, with one part mechanically attached to back of panel and the other attached to substrate.
      b. If the above is not available for a specific panel, metal impaling clips designed to support full weight of panels, mechanically attached to substrate and adhesively bonded to back of panels.

NOT FOR BIDDING

c. In all cases mounting systems are to be concealed and approved by manufacturer for proper performance.

B. Diffuser Panels

1. Manufacturer's standard accessories for concealed support for each panel type, designed to allow panel removal; fixing clips, furring strips, brackets, or rails as standard for manufacturer's concealed mounting systems.

a. In all cases mounting systems are to be concealed and approved by manufacturer for proper performance.

2. Ceiling Suspension Accessories: For panels supported from ceiling suspension grids, and accessories required for manufacturer's standard concealed mounting method.

a. Provide additional galvanized wire of vertical members to support additional weight of panels, as required.

**PART 3 EXECUTION**

3.01 EXAMINATION

A. Examine substrates for conditions detrimental to installation of acoustical panels. Proceed with installation only after unsatisfactory conditions have been corrected.

B. Panels shall be allowed to stabilize on site 24 hours prior to installation.

C. Protection: Protect all floor, wall and ceiling finishes against possible damage prior to commencing installation and during installation.

D. Do not install acoustical panels until space is enclosed and weather-proof, wet-work in space is completed and dry work above ceilings is completed and until ambient conditions of temperature and humidity will be continuously maintained at values near those indicated for final occupancy.

E. Coordinate with Other Work: Support all light fixtures, HVAC air inlet/outlet devices, speakers, signage, sprinkler heads, piping, etc. independently from panels. Contractor shall not use panels to support the weight of any other building element or component.

3.02 INSTALLATION

A. General:

1. Installation shall be in accordance with local code requirements, manufacturers instructions, and as shown on approved shop drawings, or detail sheets. Installer shall provide for shimming and adjustments as required to maintain consistent alignment of joints and of finished panel faces, and to ensure unstressed clip and mounting locations.

2. Installation shall be by factory-trained personnel or manufacturer's representatives.

B. Mounting Prefabricated Wood Fiber Acoustical Panels or Diffuser Panels:

1. Panels must only be handled by persons who are equipped as recommended by manufacturer including provisions for wearing clean light-weight gloves.

2. Install acoustical panels in locations indicated, following installation recommendations of panel manufacturer. Align panels accurately, with edges plumb and top edges level. Scribe to fit accurately at adjoining work and penetrations. Finished surfaces are to be mounted on the exposed side.

3. Lay ceiling diffuser panels in ceiling suspension grid specified under Section 09 5100 in accordance with provisions of that Section and and per panel manufacturer's instructions and recommendations.

C. Install panels and diffusers to construction tolerances of plus or minus 1/16 inch (1.6 mm) for the following:

NOT FOR BIDDING

1. Plumb and level.
2. Flatness.
3. Width of joints.

3.03 ADJUSTING

A. Following initial installation, adjust mounting hardware or suspension system so that removable panels can be removed easily, yet stay safely secured upon replacement. Adjust panels so that surfaces are aligned, flush and level or plumb and gaps in between units are of a consistent width and straight.

3.04 CLEANING

A. Clean fabric facing or other surface upon completion of installation from dust and other foreign materials, following manufacturer's instructions.

B. Remove surplus materials, trimmed portions of panels, and debris resulting from installation.

3.05 PROTECTION

A. Provide protection of installed acoustical panels until completion of the work.

B. Replace panels that cannot be cleaned and repaired to satisfaction of the Architect.

C. After installation, protect planks against dirt, water, changes in humidity and contact.

3.06 DEMONSTRATION

A. Demonstrate to the building owner or to the owner's representative the safe and proper method for removing and replacing all types of accessible panels.

B. Supply the building owner or the owner's representative with any special tools provided by the manufacturer required to unlatch safety hardware on accessible panels.

**END OF SECTION**

NOT FOR BIDDING

# SECTION 099000
# PAINTS AND COATINGS

## PART 1 GENERAL

1.01 SECTION INCLUDES

A. Surface preparation.

B. Field application of paints, stains, and other coatings.

C. Surfaces to be finished are indicated in this section and on the Drawings.

1.02 RELATED REQUIREMENTS

A. Section 05 5000 - Metal Fabrications: Shop-primed items.

B. Section 05 5100 - Metal Stairs: Shop-primed items.

C. Section 09 0190 - Coating Restoration

1.03 REFERENCE STANDARDS

A. 40 CFR 59, Subpart D - National Volatile Organic Compound Emission Standards for Architectural Coatings; U.S. Environmental Protection Agency; current edition.

1.04 SUBMITTALS

A. Product Data: Provide complete list of all products to be used, with the following information for each:

1. Manufacturer's name, product name and/or catalog number, and general product category (e.g. "alkyd enamel").

B. Certification: By manufacturer that all paints and coatings comply with VOC limits specified.

C. Samples: Submit one paper "drawdown" sample, 8-1/2 by 11 inches in size, illustrating colors selected for each finishing product specified.

1. Where sheen is specified, submit samples in only that sheen.

1.05 QUALITY ASSURANCE

A. Applicator Qualifications: Company specializing in performing the work of this section with minimum 5 years experience.

B. Material Safety Data Sheets: At project site maintain file of MSDS sheets for each product used; become familiar with and follow manufacturer's stated application and safety requirements.

1.06 MOCK-UP

A. Provide wall panel, 8 feet long by 10 feet wide, illustrating coating color, texture, and finish.

B. Locate where directed.

C. Mock-up may remain as part of the Work.

1.07 DELIVERY, STORAGE, AND HANDLING

A. Deliver products to site in sealed and labeled containers; inspect to verify acceptability.

B. Container Label: Include manufacturer's name, type of paint, brand name, lot number, brand code, coverage, surface preparation, drying time, cleanup requirements, color designation, and instructions for mixing and reducing.

C. Paint Materials: Store at minimum ambient temperature of 45 degrees F and a maximum of 90 degrees F, in ventilated area, and as required by manufacturer's instructions.

NOT FOR BIDDING

1.08 FIELD CONDITIONS

A. Do not apply materials when surface and ambient temperatures are outside the temperature ranges required by the paint product manufacturer.

B. Follow manufacturer's recommended procedures for producing best results, including testing of substrates, moisture in substrates, and humidity and temperature limitations.

C. Do not apply exterior coatings during rain or snow, or when relative humidity is outside the humidity ranges required by the paint product manufacturer.

D. Minimum Application Temperatures for Latex Paints: 45 degrees F for interiors; 50 degrees F for exterior; unless required otherwise by manufacturer's instructions.

E. Provide lighting level of 80 ft candles measured mid-height at substrate surface.

1.09 EXTRA MATERIALS

A. Supply 1 gallon of each color; store where directed.

B. Label each container with color in addition to the manufacturer's label.

**PART 2 PRODUCTS**

2.01 MANUFACTURERS

A. Provide all paint and coating products used in any individual system from the same manufacturer.

B. Provide all paint and coating products from the same manufacturer to the greatest extent possible.

C. In the event that a single manufacturer cannot provide all specified products, minor exceptions will be permitted provided approval by Architect is obtained using the specified procedures for substitutions.

D. Paints: Acceptable manufacturers are limited to the following:
   1. Benjamin Moore & Co: www.benjaminmoore.com.
   2. Sherwin-Williams: www.sherwin-williams.com.

2.02 MATERIALS - GENERAL

A. Volatile Organic Compound (VOC) Content:
   1. Provide coatings that comply with the most stringent requirements specified in the following:
      a. 40 CFR 59, Subpart D--National Volatile Organic Compound Emission Standards for Architectural Coatings.
      b. Ozone Transport Commission (OTC) Model Rule, Architectural, Industrial, and Maintenance Coatings; www.otcair.org; specifically:
         1) Opaque, Flat: 50 g/L, maximum.
         2) Opaque, Nonflat: 150 g/L, maximum.
         3) Opaque, High Gloss: 250 g/L, maximum.
         4) Varnishes: 350 g/L, maximum.
      c. Architectural coatings VOC limits of State in which the project is located.
   2. Determination of VOC Content: Testing and calculation in accordance with 40 CFR 59, Subpart D (EPA Method 24), exclusive of colorants added to a tint base and water added at project site; or other method acceptable to authorities having jurisdiction.

B. Provide ready mixed paints and coatings .

NOT FOR BIDDING

C. Provide materials that are compatible with one another and the substrates indicated under conditions of service and application, as demonstrated by manufacturer based on testing and field experience.

2.03 PAINT SYSTEMS

A. Provide Premium Grade systems (2 top coats).

B. Provide colors as directed by Architect.
   1. Allow for minimum of five colors for each system, unless otherwise indicated, without additional cost to Owner.
   2. Extend colors to surface edges; colors may change at any edge as directed by Architect.

2.04 EXTERIOR PAINT SYSTEMS

A. SYSTEM E-1:
   1. Substrate: Structural Steel and Metal Fabrications:
   2. Applications include but are not limited to miscellaneous metal boxes and structural steel.
   3. Manufacturers and products:
      a. Sherwin Williams:
         1) 1st Coat: S-W Pro Industrial Pro-Cryl Universal Primer, B66-310 Series
         2) 2nd Coat: S-W A-100 Exterior Latex Gloss, A8 Series
         3) 3rd Coat: S-W A-100 Exterior Latex Gloss, A8 Series
      b. Benjamin Moore:
         1) 1st Coat: Moore PO6 Super Spec HP Alkyd Metal Primer
         2) 2nd Coat: 096 MoorGlo Acrylic Semi-Gloss House Paint
         3) 3rd Coat: 096 MoorGlo Acrylic Semi-Gloss House Paint

B. SYSTEM E-2:
   1. Substrate: Hollow metal door frames:
   2. Finish: Semi-Gloss.
   3. Manufacturers and Products:
      a. Sherwin Williams:
         1) 1st Coat: DTM Acrylic Primer/Finish, B66W1
         2) 2nd Coat:DTM Acrylic Gloss Coating, B66W100
         3) 3rd Coat:DTM Acrylic Gloss Coating, B66W100
      b. Benjamin Moore:
         1) 1st Coat: Moorcraft Super Spec DTM Alkyd Satin, Z163
         2) 2nd Coat:Moorcraft Super Spec Urethane Gloss Enamel, Z22
         3) 3rd Coat: Moorcraft Super Spec Urethane Gloss Enamel, Z22

C. SYSTEM E-3:
   1. Substrate: Galvanized Metal, Not Chromate Passivated:
   2. Applications include but are not limited to railings, lintels and bollards.
   3. Manufacturers and Products:
      a. Sherwin Williams:
         1) 1st Coat:S-W Pro Industrial Pro-Cryl® Primer, B66-310 Series
         2) 2nd Coat:S-W ProMar® 200 Latex Semi-Gloss, B31W2200 Series
         3) 3rd Coat:S-W ProMar® 200 Latex Semi-Gloss, B31W2200 Series
      b. Benjamin Moore:
         1) 1st Coat: Moore P04 Super Spec HP Acrylic Metal Primer
         2) 2nd Coat:Moore N096 MoorGlo Acrylic Semi-Gloss House Paint
         3) 3rd Coat:Moore N096 MoorGlo Acrylic Semi-Gloss House Paint

NOT FOR BIDDING

2.05 INTERIOR PAINT SYSTEMS

A. SYSTEM I-1:
   1. Substrate: Concrete Masonry Units
   2. Manufacturers and Products:
      a. Sherwin Williams:
         1) 1st Coat:S-W PrepRite® Block Filler, B25W25
         2) 2nd Coat:S-W ProMar® 200 Latex Semi-Gloss, B20W2200 Series
         3) 3rd Coat:S-W ProMar® 200 Latex Semi-Gloss, B20W2200 Series
      b. Benjamin Moore:
         1) 1st Coat:Moore 160 Super Spec Latex Block Filler
         2) 2nd Coat:333 Regal AquaGlo Acrylic Semi-Gloss Enamel
         3) 3rd Coat:333 Regal AquaGlo Acrylic Semi-Gloss Enamel

B. SYSTEM I-2
   1. Substrate: Concrete Masonry Units (Epoxy paint, Semi-gloss finish)
   2. Manufacturers and Products:
      a. Sherwin Williams:
         1) 1st Coat:S-W Heavy Duty Block Filler, B42W46
         2) 2nd Coat:S-W Pro Industrial HB/ Water based Epoxy, B71W111/B71W100 Series
         3) 3rd Coat:S-W Pro Industrial HB/ Water based Epoxy, B71W111/B71W100 Series
      b. Benjamin Moore:
         1) 1st Coat: Super Spec HP Waterborne Epoxy Block Filler P31
         2) 2nd Coat:Super Spec HP Acrylic Epoxy Coating P43
         3) 3rd Coat:Super Spec HP Acrylic Epoxy Coating P43

C. SYSTEM I-3
   1. Substrate: Structural Steel and Metal Fabrications:
   2. FInish: Semi-Gloss.
   3. Manufacturers and Products:
      a. Sherwin Williams:
         1) 1st Coat: S-W Pro Industrial Pro-Cryl® Primer, B66-310 Series
         2) 2nd Coat: S-W ProMar® 200 Latex Semi-Gloss, B31W2200 Series
         3) 3rd Coat: S-W ProMar® 200 Latex Semi-Gloss, B31W2200 Series
      b. Benjamin Moore:
         1) 1st Coat: Moore P04 Super Spec HP Acrylic Metal Primer
         2) 2nd Coat:N333 Regal AquaGlo Acrylic Semi-Gloss Enamel
         3) 3rd Coat: N333 Regal AquaGlo Acrylic Semi-Gloss Enamel

D. SYSTEM I-4
   1. Substrate: Hollow metal door frames:
   2. Finish: Gloss.
   3. Manufacturers and Products:
      a. Sherwin Williams:
         1) 1st Coat: DTM Acrylic Primer/Finish, B66W1
         2) 2nd Coat: S-W Pro Industrial Acrylic Semi-Gloss Coating, B66-650 Series.
         3) 3rd Coat: S-W Pro Industrial Acrylic Semi-Gloss Coating, B66-650 Series.
      b. Benjamin Moore:

NOT FOR BIDDING

1) 1st Coat: Corotech Acrylic Metal Primer V110.
2) 2nd Coat:Corotech Acrylic DTM Enamel Semi-Gloss V331.
3) 3rd Coat: Corotech Acrylic DTM Enamel Semi-Gloss V331.

E. SYSTEM I-5
1. Substrate: Galvanized Metal, Not Chromate Passivated:
2. Applications include but are not limited to railings and exposed ductwork.
3. Manufacturers and Products:
a. Sherwin WIlliams:
1) 1st Coat:S-W Pro Industrial Pro-Cryl® Primer, B66-310 Series
2) 2nd Coat:S-W ProMar® 200 Latex Semi-Gloss, B31W2200 Series
3) 3rd Coat:S-W ProMar® 200 Latex Semi-Gloss, B31W2200 Series
b. Benjamin Moore:
1) 1st Coat: Moore P04 Super Spec HP Acrylic Metal Primer
2) 2nd Coat:N333 Regal AquaGlo Acrylic Semi-Gloss Enamel
3) 3rd Coat:N333 Regal AquaGlo Acrylic Semi-Gloss Enamel

F. SYSTEM I-6
1. Substrate: Woodwork (Opaque Semi-Gloss Finish):
2. Manufacturers and Products:
a. Sherwin Williams:
1) 1st Coat: S-W Premium Wall & Wood Primer, B28W8111
2) 2nd Coat: S-W Pro Industrial 0 VOC Semi-Gloss Acrylic B66W651 Series
3) 3rd Coat:S-W Pro Industrial 0 VOC Semi-Gloss Acrylic B66W651 Series
b. Benjamin Moore:
1) 1st Coat: Moore 0-3 Fresh Start 100 percent Acrylic Primer Sealer
2) 2nd Coat:N333 Regal Acrylic Latex Semi-Gloss Enamel
3) 3rd Coat: N333 Regal Acrylic Latex Semi-Gloss Enamel

G. SYSTEM I-7
1. Substrate: Woodwork (Transparent, Not Floors or Stairs):
2. Applications include but are not limited to paneling and trim:
3. Manufacturers and Products:
a. Sherwin Williams:
1) Stain: S-W Minwax 250 VOC Oil Stain
2) Sealer: Sher-Wood Natural Wood Filler
3) 2nd Coat: S-W Wood Classics® Waterborne Polyurethane Varnish, Satin
4) 3rd Coat: S-W Wood Classics® Waterborne Polyurethane Varnish, Satin
b. Benjamin Moore:
1) Stain: Moore 234 Benwood Alkyd Wood Stain
2) Sealer: Moore 413 Benwood Quick-Dry Alkyd Sanding Sealer
3) 2nd Coat: 423 Benwood Stays Clear Acrylic Low Lustre Polyurethane
4) 3rd Coat: 423 Benwood Stays Clear Acrylic Low Lustre Polyurethane

H. SYSTEM I-8
1. Substrate: Wood Floors (Transparent Finish):
2. Manufacturers and Products:
a. Sherwinn Williams:
1) 1st Coat:Minwax 250 Wood Finish Stain
2) 2nd Coat:Minwax High Build Polyurethane Varnish
3) 3rd Coat:Minwax High Build Polyurethane Varnish

NOT FOR BIDDING

b. Benjamin Moore:
1) 1st Coat: Penetrating Oil Stain
2) 2nd Coat:Permathane Satin Urethane
3) 3rd Coat:Permathane Satin Urethane

I. SYSTEM I-9
1. Substrate: Wood Stage (Opaque Finish):
2. Manufacturers and Products:
a. Sherwinn Williams:
1) 1st Coat:ProMar 200 Alkyd Undercoater 49
2) 2nd Coat:ProMar Alkyd Semi-Gloss B34WZ1101
3) 3rd Coat:ProMar Alkyd Semi-Gloss B34WZ1101
b. Benjamin Moore:
1) 1st Coat: Alkyd Enamel Underbody 135
2) 2nd Coat:Satin Impervo 235
3) 3rd Coat:Satin Impervo 235

J. SYSTEM I-10
1. Substrate: Gypsum Board (Satin Finish):
2. Applications include ceilings, soffits, and bulkheads.
3. Manufacturers and Products:
a. Sherwin Williams:
1) 1st Coat:S-W PrepRite 200 Int. Latex Primer, B28 Series
2) 2nd Coat:S-W ProMar® 200 Latex Eggshell, B20Series
3) 3rd Coat:S-W ProMar® 200 Latex Semi-Gloss, B31Series
b. Benjamin Moore:
1) 1st Coat: Moore P04 Super Spec HP Acrylic Metal Primer
2) 2nd Coat:N319 Regal Acrylic Latex Eggshell Finish Enamel
3) 3rd Coat:N319 Regal Acrylic Latex Eggshell Finish Enamel

K. SYSTEM I-11
1. Substrate: Gypsum Board (Epoxy Finish):
2. Applications include walls (typical).
3. Manufacturers and Products:
a. Sherwin Williams:
1) 1st Coat:PrepRite 200 Int Latex Primer
2) 2nd Coat:ProIndustrial Precat. WB Epoxy, S-G, Series K45
3) 3rd Coat:ProIndustrial Precat. WB Epoxy, S-G, Series K46
b. Benjamin Moore:
1) 1st Coat: Benjamin Moore Ultra Spec 500 Interior Latex Primer N534
2) 2nd Coat: Corotech Pre-Catalyzed Waterborne Epoxy Eggshell V342
3) 3rd Coat: Corotech Pre-Catalyzed Waterborne Epoxy Eggshell V342

L. SYSTEM I-12
1. Substrate: Concrete Floor (Sealed):
2. Manufacturers and Products:
a. W. R. Meadows:
1) 1st Coat:CS-309/30 Concrete Curing and Sealing Compound

M. SYSTEM I-13
1. Chroma Key Finish

NOT FOR BIDDING

2. Manufacturer and product:
   a. Rosco Laboratories Inc., 52 Harbor View, Stamford, CT, USA, 06902
      1) 1st Coat: Rosco Tough Prime
      2) 2nd Coat: #05711 Chroma Key Green
      3) 3rd Coat: #05711 Chroma Key Green
      4) Over new plaster apply preliminary coat of primer, then 1st Coat noted above.
         (a) Preliminary Coat: S-W PrepRite 200 Int. Latex Primer, B28 Series

**PART 3 EXECUTION**

3.01 SCOPE -- SURFACES TO BE FINISHED

A. Paint all exposed surfaces except where indicated not to be painted or to remain natural; the term "exposed" includes areas visible through permanent and built-in fixtures when they are in place.

B. Paint the surfaces described in PART 2, indicated on the Drawings, and as follows:
   1. If a surface, material, or item is not specifically mentioned, paint in the same manner as similar surfaces, materials, or items, regardless of whether colors are indicated or not.
   2. Paint surfaces behind movable equipment and furnishings the same as similar exposed surfaces.
   3. Paint surfaces to be concealed behind permanently installed fixtures, equipment, and furnishings, using primer only, prior to installation of the permanent item.
   4. Paint back sides of access panels and removable and hinged covers to match exposed surfaces.
   5. Finish top, bottom, and side edges of exterior doors the same as exposed faces.
   6. Paint all insulated and exposed pipe, conduit, boxes, insulated and exposed ducts, hangers, brackets, collars and supports, mechanical equipment, and electrical equipment occurring in finished areas to match background surfaces, unless otherwise indicated.
   7. Paint shop-primed mechanical and electrical items occurring in finished areas.
   8. Remove unfinished louvers, grilles, covers, and access panels on mechanical and electrical components and paint separately.
   9. Paint interior surfaces of air ducts and convector and baseboard heating cabinets with flat, nonspecular black paint where visible through registers, grilles, or louvers.
   10. Paint dampers exposed behind louvers, grilles, to match face panels.
   11. Paint both sides and edges of plywood backboards for electrical and telephone equipment before installing equipment.

C. Do Not Paint or Finish the Following Items:
   1. Items fully factory-finished unless specifically noted; factory-primed items are not considered factory-finished.
   2. Items indicated to receive other finish.
   3. Items indicated to remain naturally finished.
   4. Fire rating labels, equipment serial number and capacity labels, and operating parts of equipment.
   5. Polished and brushed stainless steel items.
   6. Brick, precast concrete, integrally colored plaster.
   7. Polished and brushed stainless steel, anodized aluminum, bronze, terne, and lead.
   8. Acoustical materials.
   9. Concealed piping, ductwork, and conduit.

NOT FOR BIDDING

3.02 EXAMINATION

A. Verify that surfaces are ready to receive Work as instructed by the product manufacturer.

B. Examine surfaces scheduled to be finished prior to commencement of work. Report any condition that may potentially affect proper application.

C. Test shop-applied primer for compatibility with subsequent cover materials; report incompatible primer conditions and submit recommended changes for Architect's approval.

D. Measure moisture content of surfaces using an electronic moisture meter. Do not apply finishes unless moisture content of surfaces are below the following maximums:
   1. Plaster and Gypsum Board: 12 percent.
   2. Masonry, Concrete, and Concrete Unit Masonry: 12 percent.
   3. Interior Wood: 15 percent, measured in accordance with ASTM D4442.

E. Measure the ph factor of concrete, masonry, and mortar before starting any finishing process.
   1. Report results in writing to Architect before starting work.
   2. If results of test indicates need for remedial action, provide written description of remedial action. If a different primer or paint system is required, state the total cost of the change. Do not proceed with remedial action or change without receiving written authorization from Architect.

3.03 PREPARATION

A. Prepare surfaces as follows for the applicable surface and coating; if multiple preparation treatments are specified, use as many as necessary for best results; where external standards are referenced for preparation (e.g. SSPC standards), prepare as specified in those standards; comply with coating manufacturer's specific preparation methods or treatments, if any.

B. Coordinate painting work with cleaning and preparation work so that dust and other contaminants do not fall on newly painted, wet surfaces.

C. Surface Appurtenances: Prior to preparing surfaces or finishing, remove electrical plates, hardware, light fixtures, light fixture trim, escutcheons, machined surfaces, fittings, and similar items already installed that are not to be painted.
   1. If removal is impractical or impossible because of the size or weight of the item, provide surface-applied protection before preparation and finishing.
   2. After completing painting in each space or area, reinstall items removed using workers skilled in the trades involved.

D. Surfaces: Correct defects and clean surfaces which affect work of this section.

E. Marks: Seal with shellac those which may bleed through surface finishes.

F. Impervious Surfaces: Remove mildew by scrubbing with solution of tetra-sodium phosphate and bleach. Rinse with clean water and allow surface to dry.

G. Concrete, Cement Plaster and Unit Masonry Surfaces to be Painted: Remove dirt, loose mortar, scale, salt or alkali powder, and other foreign matter. Remove oil and grease with a solution of tri-sodium phosphate; rinse well and allow to dry. Remove stains caused by weathering of corroding metals with a solution of sodium metasilicate after thoroughly wetting with water. Allow to dry.

H. Gypsum Board Surfaces to be Painted: Fill minor defects with filler compound. Spot prime defects after repair.

I. Galvanized Surfaces to be Painted: Remove surface contamination and oils and wash with solvent. Apply coat of etching primer.

NOT FOR BIDDING

J. Uncoated Steel and Iron Surfaces to be Painted: Remove grease, mill scale, weld splatter, dirt, and rust. Where heavy coatings of scale are evident, remove by hand wire brushing or sandblasting; clean by washing with solvent. Apply a treatment of phosphoric acid solution, ensuring weld joints, bolts, and nuts are similarly cleaned. Prime paint entire surface; spot prime after repairs.

K. Shop-Primed Steel Surfaces to be Finish Painted: Sand and scrape to remove loose primer and rust. Feather edges to make touch-up patches inconspicuous. Clean surfaces with solvent. Prime bare steel surfaces. Re-prime entire shop-primed item.

L. Interior Wood Items to Receive Transparent Finish: Sand wood to obtain a uniform appearance before immediately starting work. Wipe off dust and grit prior to sealing. Seal knots, pitch streaks, and sappy sections with sealer. Fill nail holes and cracks after sealer has dried; sand lightly between coats. Prime concealed surfaces with gloss varnish reduced 25 percent with thinner.

M. Metal Doors to be Painted: Prime metal door top and bottom edge surfaces.

3.04 APPLICATION

A. Apply products in accordance with manufacturer's instructions using the preparation, products, sheens, textures, and colors as indicated.
   1. Remove, refinish, or repaint work not complying with requirements.

B. Do not apply finishes over dirt, rust, scale, grease, moisture, scuffed surfaces, or other conditions detrimental to formation of a durable coating film; do not apply finishes to surfaces that are not dry.

C. Use applicators and methods best suited for substrate and type of material being applied and according to manufacturer's instructions.

D. Minimum Coating Thickness: Apply paint materials no thinner than manufacturer's recommended spreading rate; provide total dry film thickness of entire system as recommended by manufacturer.
   1. Number of coats and film thickness required are the same regardless of application method.
   2. If undercoats, stains, or other conditions show through final coat of paint, apply additional coats until paint film is of uniform finish, color, and appearance.
   3. Give special attention to ensure edges, corners, crevices, welds, and exposed fasteners receive dry film thickness equivalent to that of flat surfaces.

E. Apply finish to completely cover surfaces with uniform appearance without brush marks, runs, sags, lap, ropiness, holidays, spotting, cloudiness, or other surface imperfections.
   1. Before applying finish coats, apply a prime coat of material recommended by manufacturer, unless the surface has been prime coated by others; where evidence of suction spots or unsealed areas in first coat appear, recoat primed and sealed surfaces to ensure finish coat with no burn through or other defects due to insufficient sealing.
   2. Apply first coat to surface that has been cleaned, pretreated, or otherwise prepared as soon as practical after preparation and before subsequent surface deterioration.
   3. Do not apply succeeding coats until the previous coat has cured as recommended by manufacturer.
   4. Do not recoat until paint has dried to where it feels firm, does not deform or feel sticky under moderate thumb pressure, and application of another coat will not cause the undercoat to lift or lose adhesion.

NOT FOR BIDDING

5. If manufacturer's instructions recommend sanding to produce a smooth, even surface, sand between coats.
6. Before applying next coat vacuum clean surfaces of loose particles. Use tack cloth to remove dust and particles just prior to applying next coat.
7. Pigmented (Opaque) Finishes: Provide smooth, opaque surface of uniform finish, color, appearance, and coverage.

3.05 FIELD QUALITY CONTROL

A. See Section 01 4000 - Quality Requirements, for general requirements for field inspection.

B. Owner will provide field inspection.

3.06 CLEANING AND PROTECTION

A. Collect waste material which may constitute a fire hazard, place in closed metal containers, and remove daily from site.

B. At the end of each workday, remove empty cans, rags, rubbish, and other discarded paint materials from site.

C. Protect other work, whether being painted or not, against damage by painting. Correct damage by cleaning, repairing or replacing, and repainting as approved by Architect.

D. Provide "Wet Paint" signs to protect newly painted finishes. Remove temporary protective wrappings provided by others to protect their work after completing painting operations.

E. At completion of construction activities of other trades, touch up and restore damaged or defaced painted surfaces.

**END OF SECTION**

NOT FOR BIDDING

# SECTION 101101
# VISUAL DISPLAY BOARDS AND DISPLAY CASES

## PART 1 GENERAL

1.01 SECTION INCLUDES

A. Markerboards

B. Tackboards

C. Tackstrips

D. Display Cases.

1.02 RELATED REQUIREMENTS

A. Section 061000 - Rough Carpentry: Blocking and supports.

1.03 REFERENCE STANDARDS

A. ANSI A135.4 - American National Standard for Basic Hardboard; 2012.

B. ANSI A208.1 - American National Standard for Particleboard; 2009.

C. ASTM A424/A424M - Standard Specification for Steel, Sheet, for Porcelain Enameling; 2009a.

1.04 SUBMITTALS

A. Product Data: Provide manufacturer's data on markerboard, tackboard, tackboard surface covering, trim, and accessories.

B. Shop Drawings: Indicate wall elevations, dimensions, joint locations, special anchor details.

C. Samples: Submit color charts for selection of color and texture of markerboard, tackboard, tackboard surface covering, and trim.

D. Test Reports: Show conformance to specified surface burning characteristics requirements.

E. Manufacturer's printed installation instructions.

1.05 QUALITY ASSURANCE

A. Manufacturer Qualifications: Company specializing in manufacturing the products specified in this section with minimum three years documented experience.

1.06 WARRANTY

A. Provide five year warranty for markerboard to include warranty against discoloration due to cleaning, crazing or cracking, and staining.

## PART 2 PRODUCTS

2.01 MANUFACTURERS

A. Visual Display Boards:

1. Claridge Products and Equipment, Inc: www.claridgeproducts.com.
2. Nelson Adams NACO : www.nelsonadamsnaco.com/
3. Polyvision Corporation; Product Polyvision 500 Series P3 ceramicsteel boards: is the Basis of Design: www.polyvision.com.
   a. Fabricators shall be limited to those approved by manufacturer.
   b. Approved manufacturer/fabricator: ABC School Equipment/Platinum Visual Systems
4. Substitutions: See Section 016000 - Product Requirements.

NOT FOR BIDDING

## 2.02 VISUAL DISPLAY BOARDS

A. Markerboards: Porcelain enamel on steel, laminated to core.
   1. Color: As selected from manufacturer's full range.
   2. Steel Face Sheet Thickness: 24 gage, 0.0239 inch .
   3. Core: Particleboard, 1/2 inch thick, laminated to face sheet.
   4. Backing: Aluminum foil, laminated to core.
   5. Size: As indicated on drawings.
   6. Frame: Extruded aluminum, with concealed fasteners.
   7. Frame Profile: Box chalktray with end closures; 1 1/2" perimeter trim
   8. Frame Finish: Anodized, natural.
   9. Accessories: Provide chalk tray and map rail with 2" tack strip, hanging devices for audio-visual aids, flag holders.

B. Tackboards: Composition cork.
   1. Cork Thickness: 1/4 inch.
   2. Color: As selected from manufacturer's full range.
   3. Backing: Hardboard, 1/4 inch thick, laminated to tack surface.
   4. Size: As indicated on drawings.
   5. Frame: Same type and finish as for markerboard.
   6. Frame Profile: 1 1/2" perimeter trim.
   7. Frame Finish: Anodized, natural.

C. Combination Units and Units Made of More Than One Panel: Factory-assembled markerboards and tackboards in a single frame, of materials specified above.
   1. Join panels of different construction with H-shaped extruded aluminum molding finished to match frame.
   2. Join panels of similar construction with butt joints, aligned and secured with steel spline concealed in edge of core.
   3. Configuration: As indicated on drawings.
   4. Units Too Large to Ship Assembled: Fully assembled in factory, then disassembled for shipping.

D. Corridor Tack Strips:
   1. Tack strips: Polyvision 2" Aluminum Display Rail with composition cork.
   2. Color: As selected from manufacturer's standard colors.
   3. Quantity: as shown.

## 2.03 MATERIALS

A. Porcelain Enameled Steel Sheet: ASTM A424/A424M, Type I, Commercial Steel, with fired-on vitreous finish.

B. Hardboard for Chalk Surface: ANSI A135.4, Tempered type.

C. Particleboard: ANSI A208.1; wood chips, set with waterproof resin binder, sanded faces.

D. Foil Backing: Aluminum foil sheet, 0.005 inch thick.

E. Adhesives: Type used by manufacturer.

## 2.04 DISPLAY CASES - RECESSED

A. Display Cases: Claridge 370 Series, size as scheduled.
   1. Equivalent products of Polyvision are also acceptable.

B. Back: plywood with composition color cork tack surfaces, same as for tackboards.

NOT FOR BIDDING

C. Top, Sides, and Bottom : Veneer Core Plywood: ¾" thick 7 ply white maple veneer core plywood, Grade A, transparent factory finish.

D. Shelf Standards: 5/8-inch by 7/16-inch steel with anachrome finish and slots in 1-inch increments.

E. Glass (shelving and doors): ASTM C 1048, FT (fully tempered), Type I.
   1. Thickness: 6 mm (1/4 inch nominal).
   2. Color: Clear.

F. Glass shelving: provide 3 rows per case.

G. Aluminum Perimeter Trim: 6063-T5 alloy, 3-1/2" aluminum trim, mitered, with reinforced corners and mechanical fasteners
   1. Finish: Powder-coated, color as selected by architect from standard RAL colors.

H. Sliding Door Locks: chrome plated, one per set of doors.

I. Lights: LED lighting - see Electrical.

2.05 DISPLAY CASES - SURFACE MOUNTED

A. Display Cases: Claridge Premiere Series, size as scheduled.
   1. Equivalent products of Polyvision are also acceptable.

B. Back: plywood with composition color cork tack surfaces, same as for tackboards.

C. Top and Bottom : Veneer Core Plywood: ¾" thick 7 ply white maple veneer core plywood, Grade A, transparent factory finish.

D. Sides: 6 mm (1/4 inch nominal) tempered glass, ASTM C 1048, FT (fully tempered), Type I.

E. Shelf Standards: 5/8-inch by 7/16-inch steel with anachrome finish and slots in 1-inch increments.

F. Glass (shelving and doors): ASTM C 1048, FT (fully tempered), Type I.
   1. Thickness: 6 mm (1/4 inch nominal).
   2. Color: Clear.

G. Glass shelving: provide 3 rows per case.

H. Aluminum Perimeter Trim: 6063-T5 alloy, 1-1/2" x 2" extruded aluminum tube; mitered, with reinforced corners and mechanical fasteners
   1. Finish: Powder-coated, color as selected by architect from standard RAL colors.

I. Sliding Door Locks: chrome plated, one per set of doors.

J. Lights: LED lighting - see Electrical.

2.06 ACCESSORIES

A. Map Rail: Extruded aluminum, manufacturer's standard profile, with cork insert and runners for accessories; 2 inch wide, full width of frame.

B. Map Supports: Formed aluminum sliding hooks and roller brackets to fit map rail. Provide (2) per board.

C. Flag Holders: For 2" map rail, with rail clamp. Inside diameter of flag tube: 1/2". Provide (1) per board.

D. Temporary Protective Cover: Sheet polyethylene, 8 mil thick.

E. Cleaning Instruction Plate: Provide instructions for chalkboard cleaning on a metal plate fastened to perimeter frame near chalkrail.

NOT FOR BIDDING

F. Chalk Tray: Aluminum, manufacturer's standard profile, one piece full length of chalkboard, molded ends, concealed fasteners, same finish as frame.

G. Mounting Brackets: Concealed.

**PART 3 EXECUTION**

3.01 EXAMINATION

A. Verify that field measurements are as indicated.

B. Verify that internal wall blocking is ready to receive work and positioning dimensions are as indicated on shop drawings.

C. Verify flat wall surface for frameless adhesive-applied boards.

3.02 INSTALLATION

A. Install boards in accordance with manufacturer's instructions.

B. Install with top of chalk tray at 32 inches above finished floor, unless otherwise noted.

C. Secure units level and plumb.

D. Butt Joints: Install with tight hairline joints.

3.03 CLEANING

A. Clean board surfaces in accordance with manufacturer's instructions.

B. Cover with protective cover, taped to frame.

C. Remove temporary protective cover at Date of Substantial Completion.

3.04 DISPLAY CASE SCHEDULE

| Room | Type | Quantity | Size | Notes |
|---|---|---|---|---|
| 100B | Display, recessed | 4 | 8’-0”w x 4’-0”h x 1’-4” d | 1 |
| 100M | Display, surface mounted | 4 | 4’-0” w x 4'-0”h x 1’-4”d | 1 |

Notes:

1. See electrical for lighting.

**END OF SECTION**

NOT FOR BIDDING

# SECTION 102113.19
# PLASTIC TOILET COMPARTMENTS

## PART 1 GENERAL

1.01 SECTION INCLUDES

A. Solid plastic toilet compartments.

B. Urinal screens.

1.02 RELATED REQUIREMENTS

A. Section 061000 - Rough Carpentry: Blocking and supports.

B. Section 102800 - Toilet Accessories.

1.03 REFERENCE STANDARDS

A. ASTM A666 - Standard Specification for Annealed or Cold-Worked Austenitic Stainless Steel Sheet, Strip, Plate, and Flat Bar; 2015.

B. NFPA 286 - Standard Methods of Fire Tests for Evaluating Contribution of Wall and Ceiling Interior Finish to Room Fire Growth; 2015.

1.04 ADMINISTRATIVE REQUIREMENTS

A. Coordination: Coordinate the work with placement of support framing and anchors in walls and ceilings.

1.05 SUBMITTALS

A. See Section 013000 - Administrative Requirements for submittal procedures.

B. Product Data: Provide data on panel construction, hardware, and accessories.

C. Shop Drawings: Indicate partition plan, elevation views, dimensions, details of wall and floor supports, door swings.

D. Samples: Submit two samples of partition panels, 4 x 4 inch in size illustrating panel finish, color, and sheen.

1.06 QUALITY ASSURANCE

A. Manufacturer Qualifications: A company regularly engaged in manufacture of products specified in this section and whose products have been in satisfactory use under similar service conditions for not less than 5 years.

B. Installer Qualifications: A company regularly engaged in installation of products specified in this Section, with a minimum of 5 years experience.

## PART 2 PRODUCTS

2.01 MANUFACTURERS

A. Solid Plastic Toilet Compartments:

1. All American Metal Corp - AAMCO: www.allamericanmetal.com/#sle.
2. Metpar Corp: www.metpar.com/#sle.
3. Basis of Design: Scranton Products (Santana/Comtec/Capital): www.scrantonproducts.com/#sle.
4. Substitutions: Section 016000 - Product Requirements.

NOT FOR BIDDING

2.02 PLASTIC TOILET COMPARTMENTS

A. Solid Plastic Toilet Compartments: Factory fabricated doors, pilasters, and divider panels made of solid molded high density polyethylene (HDPE); floor-mounted headrail-braced; tested and passed in accordance with NFPA 286.
   1. Color and Finish: Metallic Series, Stainless-Rotary Brushed.
   2. Doors:
      a. Thickness: 1 inch.
      b. Width: 24 inch.
      c. Width for Handicapped Use: 36 inch, out-swinging.
      d. Height: 66 inch.
   3. Panels:
      a. Thickness: 1 inch.
      b. Height: 66 inch.
   4. Pilasters:
      a. Thickness: 1 inch.
      b. Width: As required to fit space; minimum 3 inch.
   5. Urinal Screens: To match compartments; mounted to wall with continuous panel brackets.
      a. Thickness: 1 inch.
      b. Depth: 18 inches.
      c. Height: 55 inch.

2.03 ACCESSORIES

A. Pilaster Shoes: Stainless steel, satin finish, 3 inches high; concealing floor fastenings.
   1. Provide adjustment for floor variations with screw jack through steel saddles integral with pilaster.

B. Head Rails: Extruded aluminum, anti-grip profile.

C. Wall and Pilaster Brackets: Stainless steel; continuous type.
   1. Urinal screen wall brackets: Continuous, extruded aluminum.

D. Attachments, Screws and Bolts: Stainless steel, tamper proof type.
   1. For attaching panels and pilasters to brackets: stainless steel tamper resistant torx head set bolts.

E. Hinges: Stainless steel; satin finish.
   1. Continuous-type hinge at all locations, self closing at accessible compartments.

F. Door Hardware: Stainless steel; polished finish, unless otherwise noted.
   Door Latch: Slide type with exterior emergency access feature.
   2. Door Strike and Keeper with Rubber Bumper: Mount on pilaster in alignment with door latch. Provide extruded aluminum strikes, full height of door panel.
   3. Provide door pull for outswinging doors.
   4. Provide additional door pull at interior of outswinging doors of accessible stalls.
   5. Coat Hook with Rubber Bumper: One per compartment, mounted on door.

**PART 3 EXECUTION**

3.01 EXAMINATION

A. Verify that field measurements are as indicated.

B. Verify correct spacing of and between plumbing fixtures.

NOT FOR BIDDING

C. Verify correct location of built-in framing, anchorage, and bracing.

3.02 INSTALLATION

A. Install partitions secure, rigid, plumb, and level in accordance with manufacturer's instructions.

B. Maintain 3/8 inch to 1/2 inch space between wall and panels and between wall and end pilasters.

C. Attach panel brackets securely to walls using anchor devices.

D. Attach panels and pilasters to brackets. Locate head rail joints at pilaster center lines.

E. Field touch-up of scratches or damaged finish will not be permitted. Replace damaged or scratched materials with new materials.

3.03 TOLERANCES

A. Maximum Variation From True Position: 1/4 inch.

B. Maximum Variation From Plumb: 1/8 inch.

3.04 ADJUSTING

A. Adjust and align hardware to uniform clearance at vertical edge of doors, not exceeding 3/16 inch.

B. Adjust adjacent components for consistency of line or plane.

**END OF SECTION**

NOT FOR BIDDING

# SECTION 102123
# CUBICLE CURTAINS

## PART 1 - GENERAL

1.01 SECTION INCLUDES

A. The fabrication, furnishing, delivery, and installation of cubicle curtains.

B. The work of this section shall include, but not necessarily be limited to the following:
   1. Cubicle curtains in Nurse area.

1.02 GENERAL REQUIREMENTS

A. Field Conditions: All bidders shall fully inform themselves of the conditions under which the work is to be performed. No additional compensation shall be allowed for any labor or item the bidder could have been fully informed of prior to the bid date

1.03 QUALITY ASSURANCE

A. Installer Qualifications: An experienced installer who has completed installation of curtains similar in material, design, and extent to that indicated for this Project and whose work has resulted in construction with a record of successful in-service performance.

B. Fire-Test-Response Characteristics: Provide curtains with the fire-test-response characteristics indicated, as determined by testing identical products per test method indicated below by UL or a testing and inspecting agency acceptable to authorities having jurisdiction. Permanently attach label to each fabric of curtain assembly indicating whether fabric is inherently and permanently flame resistant, or treated with flame retardant chemicals, and whether it will require retreatment after designated time period or cleaning.
   1. Flame resistance ratings : passes NFPA 701

C. Cubicle curtains: Anti-Microbial Characteristics: 'No Growth' per ASTM G 21 results for fungi ATCC9642, ATCC 9644, ATCC 9645.

1.04 SUBMISSIONS

A. Drawings: Submit component and installation drawings and schedules showing all information necessary to fully explain the features, appearance, function, fabrication and installation.

B. Curtain Samples for Initial Selection: Manufacturer's color charts showing the full range of colors, textures, and patterns available, together with 12-inch- square sample (any color) of each type fabric.

C. Product Certificates: Signed by manufacturers of curtains certifying that products furnished comply with requirements. Give name of flame-retardant chemical used, identification of applicator, treatment method, application date, allowable life span for treatment, and details of any restrictions and limitations.
   1. Schedule: Prior to the commencement of the installation work, the Contractor shall submit an outline of the proposed schedule and requirements for approval.

1.05 PROJECT CONDITIONS

A. Field Measurements: Verify curtain openings and dimensions of other construction by field measurements before fabrication and indicate measurements on Shop Drawings. Coordinate fabrication schedule with construction progress to avoid delaying the Work

## PART 2 - PRODUCTS

2.01 CUBICLE CURTAINS AND TRACK.

A. Approved manufacturers: Maharam; Interspec; Architex; Carnegie

NOT FOR BIDDING

B. Curtains:
   1. Fabric: 100% flame retardant polyester.
   2. Width: Equal to respective track length, plus minimum 20% fullness.
   3. Length: equal to floor to ceiling length, with 20 “heading mesh, minus 10” (above floor)
   4. Mesh shall be serged to face fabric, turned and stitched with double needle lock stitch no less than 1/2" in width.
   5. Bottom and side hems: Fabric is double folded 1 1/2” and sewn with double needle lock stitch.
   6. Vertical Seams: Seams are serged together and sewn with double needle lock stitch minimum ½” wide.
   7. Heading mesh: Provide 20” mesh, no snag, tightly woven selvedge, minimum 75% open, ½” diagonal; with 1.25 “ grommet band at top edge. Color : Beige.
   8. Curtain grommets: #2 two rolled-edge, rust proof, nickel plated brass, spaced no more than 6” o/c. and machined into top header.
   9. Track:
      a. Extruded Aluminum track : 1 3/8” wide x ¾” high.
      b. Curve track: factory fabricated as required.
      c. Finish: white, baked enamel.
   10. Track accessories.
      a. Provide all required accessories to match track. End stops - removable.
      b. Fasteners: stainless steel.
   11. Curtain carriers.
      a. Two nylon rollers, nylon axle and tangle free nylon swivel stem with chrome plated steel hook.

**PART 3 - EXECUTION**

3.01 INSTALLATION – CUBICLE CURTAINS

A. Install tracks level and plumb per manufacture’s instructions.

B. Type: surface mounted on ceiling grid.

C. Provide adequate carriers for installation, plus 10% extra as attic stock.

3.02 LOCATION

A. Nurse Area

3.03 CLEAN UP

A. The Contractor shall be responsible for clean up, including removal of packing materials etc. and the protection of surfaces or equipment provided by other contractors.

B. Manuals and instruction in the care and maintenance of curtains shall be provided in accordance with Part 1 of this Specification.

**END OF SECTION**

NOT FOR BIDDING

# SECTION 102601
# CORNER GUARDS

## PART 1 GENERAL

1.01 SECTION INCLUDES

A. Corner guards.

1.02 RELATED REQUIREMENTS

A. Section 061000 - Rough Carpentry: Blocking for corner guard anchors.

1.03 REFERENCE STANDARDS

A. ASTM E84 - Standard Test Method for Surface Burning Characteristics of Building Materials; 2016.

B. ASTM E119 - Standard Test Methods for Fire Tests of Building Construction and Materials; 2016a.

1.04 SUBMITTALS

A. Product Data: Indicate physical dimensions, features, anchorage details, and rough-in measurements.

B. Samples for Initial Selection: For each type of impact-resistant wall protection unit indicated.

C. Material Test Reports: For each impact-resistant plastic material.

D. Maintenance Data: Include recommended methods and frequency of maintenance for maintaining optimum condition of plastic covers under anticipated traffic and use conditions. Include precautions against using cleaning materials and methods that may be detrimental to plastic finishes and performance.

1.05 QUALITY ASSURANCE

A. Installer Qualifications: An employer of workers trained and approved by manufacturer.

B. Source Limitations: Obtain impact-resistant wallprotection units through one source from a single manufacturer.

C. FireTestResponse Characteristics: Provide impactresistant, plastic wallprotection units with surfaceburning characteristics as determined by testing identical products per ASTM E 84, NFPA 258, or UL 723 by UL or another testing and inspecting agency acceptable to authorities having jurisdiction.

1.06 DELIVERY, STORAGE, AND HANDLING

A. Store impact-resistant wall protection units in original undamaged packages and containers inside well-ventilated area protected from weather, moisture, soiling, extreme temperatures, and humidity.

B. Maintain room temperature within storage area at not less than 70 deg F (21 deg C) during the period plastic materials are stored.

C. Keep plastic sheet material out of direct sunlight.

D. Store plastic wallprotection components for a minimum of 72 hours, or until plastic material attains a minimum room temperature of 70 deg F (21 deg C).

## PART 2 PRODUCTS

2.01 MANUFACTURERS

A. Corner Guards:

NOT FOR BIDDING

1. Basis of Design: Construction Specialties, Inc: www.c-sgroup.com.
2. Inpro: www.inprocorp.com/#sle.
3. Substitutions: See Section 016000 - Product Requirements.

2.02 COMPONENTS

A. Corner Guards - Stainless Steel:
1. Material: Type 304 stainless steel, No. 4 finish, 16 gage, 0.053 inch thick.
2. Width of Wings: 3-1/2 inches.
3. Corner: Radiused, 3/16"
4. Length: One piece.
5. Location: Outside corners in Kitchen areas.

B. Corner Guards - Surface Mounted:
1. Material: High impact vinyl with full height extruded aluminum retainer.
2. Performance: Resist lateral impact force of 100 lbs at any point without damage or permanent set.
3. Surface Burning Characteristics: Provide assemblies with flame spread index of 25 or less and smoke developed index of 450 or less, when tested in accordance with ASTM E84.
4. Width of Wings: 3 inches.
5. Height: 6'-0"
6. Corner: Radiused.
7. Color: As selected from manufacturer's standard colors.
8. Length: One piece.
9. Basis of Design: Construction Specialties Acrovyn SM-20.
10. Location: As indicated.

2.03 FABRICATION

A. Fabricate components with tight joints, corners and seams.

B. Pre-drill holes for attachment.

C. Form end trim closure by capping and finishing smooth.

**PART 3 EXECUTION**

3.01 EXAMINATION

A. Verify that rough openings, concealed blocking, and anchors are correctly sized and located.

B. Verify that field measurements are as indicated on drawings.

3.02 INSTALLATION

A. Install components in accordance with manufacturer's instructions, level and plumb, secured rigidly in position to wall framing members only.

B. Position corner guard 0 inches above finished floor to 72 inches high.

**END OF SECTION**

NOT FOR BIDDING

# SECTION 102800
# TOILET ACCESSORIES

## PART 1 GENERAL

1.01 SECTION INCLUDES

A. Commercial toilet accessories.

B. Electric hand dryers.

1.02 RELATED REQUIREMENTS

A. Section 06 1000 - Rough Carpentry: Concealed supports for accessories, including in wall framing and plates and above ceiling framing.

B. Section 102113.19 - Plastic Toilet Compartments.

1.03 REFERENCE STANDARDS

A. ASTM A269/A269M - Standard Specification for Seamless and Welded Austenitic Stainless Steel Tubing for General Service; 2015.

B. ASTM A653/A653M - Standard Specification for Steel Sheet, Zinc-Coated (Galvanized) or Zinc-Iron Alloy-Coated (Galvannealed) by the Hot-Dip Process; 2015.

C. ASTM A666 - Standard Specification for Annealed or Cold-Worked Austenitic Stainless Steel Sheet, Strip, Plate, and Flat Bar; 2015.

D. ASTM C1036 - Standard Specification for Flat Glass; 2011.

E. ASTM C1048 - Standard Specification for Heat-Strengthened and Fully Tempered Flat Glass; 2012.

1.04 ADMINISTRATIVE REQUIREMENTS

A. Coordinate the work with the placement of internal wall reinforcement and reinforcement of toilet partitions to receive anchor attachments.

1.05 SUBMITTALS

A. See Section 013000 - Administrative Requirements, for submittal procedures.

B. Product Data: Submit data on accessories describing size, finish, details of function, and attachment methods.

## PART 2 PRODUCTS

2.01 MANUFACTURERS

A. Basis of Design Products listed are made by Bobrick Washroom Equipment, Inc., www.bobrick.com.

B. Other Approved Manufacturers for Commercial Toilet Accessories:
   1. Bradley Corporation: www.bradleycorp.com.
   2. Substitutions: Section 016000 - Product Requirements.

C. Electric Hand/Hair Dryers:
   1. Excel Dryer: www.exceldryer.com/#sle.
   2. Substitutions: Section 016000 - Product Requirements.

2.02 MATERIALS

A. Accessories - General: Shop assembled, free of dents and scratches and packaged complete with anchors and fittings, steel anchor plates, adapters, and anchor components for installation.

B. Keys: Provide 2 keys for each accessory to Owner; master key lockable accessories.

NOT FOR BIDDING

C. Stainless Steel Sheet: ASTM A666, Type 304.

D. Stainless Steel Tubing: ASTM A269/A269M, Grade TP304 or TP316.

E. Galvanized Sheet Steel: Hot-dipped galvanized steel sheet, ASTM A653/A653M, with G90/Z275 coating.

F. Mirror Glass: Tempered safety glass, ASTM C1048; and ASTM C1036 Type I, Class 1, Quality Q2, with silvering as required.

G. Adhesive: Two component epoxy type, waterproof.

H. Fasteners, Screws, and Bolts: Hot dip galvanized; tamper-proof; security type.

I. Expansion Shields: Fiber, lead, or rubber as recommended by accessory manufacturer for component and substrate.

2.03 FINISHES

A. Stainless Steel: Satin finish, unless otherwise noted.

2.04 TOILET ACCESSORIES

A. Item A: Mirrors: Stainless steel framed, 6 mm thick laminated glass mirror.
   1. Product: Bobrick B-290 series, manufactured by Bobrick.
   2. Size: As shown.
   3. Frame: 3/4 inchangle shapes, with mitered and welded and ground corners, and tamperproof hanging system; No.4 finish.

B. Item B: Toilet Paper Dispenser: Triple roll, surface mounted, for coreless type rolls; provided by vendor, installed by contractor.
   1. Products:
      a. Hillyard Product No. PAP42627.

C. Item C: NOT USED.

D. Item D: Roll Towel Dispenser: Single roll, surface mounted bracket type, black translucent plastic cover; provided by vendor, installed by contractor.
   1. Products:
      a. Hillyard Product No. PAP42819.

E. Item E: Sanitary Napkin Disposal Unit: Stainless steel, surface-mounted, self-closing door, locking bottom panel with full-length stainless steel piano-type hinge, removable receptacle.
   1. Product: B-270 manufactured by Bobrick.

F. Item F: Soap Dispenser: Manual soap dispenser, wall-mounted, surface, with black plastic cover and vertical tank and working parts; push type soap valve, check valve, and window gage refill indicator.
   1. Products:
      a. Hillyard Product No. HIL22281.
   2. Provided by vendor, installed by Contractor.

G. Item G: Grab Bars: Stainless steel, 1-1/4 inches outside diameter, minimum 0.05 inch wall thickness, nonslip grasping surface finish, concealed flange mounting; 1-1/2 inches clearance between wall and inside of grab bar.
   1. Product: B-5806.99 series manufactured by Bobrick.
   2. Length and configuration: As indicated on drawings.

H. Item H: Electric Hand Dryer:
   1. Product: XLerator Automatic Hand Dryer.

NOT FOR BIDDING

a. Model: XL-W: Surface mounted with white metal cover.
b. Electrical: 120v. 60 Hz.
c. Cover: Die-cast zinc alloy; One-piece, heavy-duty, rib-reinforced, lightweight, unbreakable, rustproof; all exposed surfaces shall be bright chrome plated or finished with chip-proof, electrostatically applied epoxy paint.
d. Provide stainless steel ADA recess kit
e. Provide noise reduction nozzle

2. Stainless Steel Backsplash: Provide stainless steel sheet behind electric hand dryer, extending from top of hand dryer to top of wall base, 16 inches wide, with hemmed edges and conccealed fasteners.

I. Item I: Waste Receptacle: Wall-mounted, stainless steel, continuously welded bottom pan, seamless exposed flanges, and hemmed top edge.
1. Liner: Removable, heavy-duty vinyl liner, attached at a minimum of 4 points with stainless steel grommets and hooks.
2. Minimum capacity: 12 3/4 gallons.
3. Product: B-277 manufactured by Bobrick.

J. Item J: Combination Utility Shelf/Mop and Broom Holder: 0.05 inch thick stainless steel, Type 304, with 1/2 inch returned edges, 0.06 inch steel wall brackets.
1. Hooks: Two, 0.06 inch stainless steel rag hooks at shelf front.
2. Mop/broom holders: Three spring-loaded rubber cam holders at shelf front.
3. Length: Manufacturer's standard length for number of holders/hooks.
4. Locations : Provide (1) Utility Shelf/Mop and Broom Holder in each Jan./Custodial Closet.

K. Item K: NOT USED.

L. Item L: Heavy-Duty Shower Curtain Rod
1. Product: Bobrick Model B-2[illegible]7, 72" length; cut to length as required.

M. Item M: Stainless Steel Shower Curtain Hooks
1. Product: Bobrick Model 204-1

N. Item N: Vinyl Shower Curtains
1. Product: Bobrick Models 204-2 and 204-3.

O. Item P: Robe Hook
1. Product: Bobrick Model B-76717.

P. Item Q: Folding Shower Seat: Wall-mounted surface; welded tubular seat frame, structural support members, hinges and mechanical fasteners of Type 304 stainless steel, rectangular seat.
1. Seat: Phenolic or polymeric composite one-piece seat or seat slats, of color as selected.
2. Size: ADA compliant.
3. Product: Model 9562 manufactured by Bradley Corp..

**PART 3 EXECUTION**

3.01 EXAMINATION

A. Verify existing conditions before starting work.

B. Verify exact location of accessories for installation.

C. For electrically-operated accessories, verify that electrical power connections are ready and in the correct locations.

D. Verify that field measurements are as indicated on drawings.

NOT FOR BIDDING

3.02 PREPARATION

A. Deliver inserts and rough-in frames to site for timely installation.

B. Provide templates and rough-in measurements as required.

3.03 INSTALLATION

A. Install accessories in accordance with manufacturers' instructions in locations indicated drawings.

B. Install plumb and level, securely and rigidly anchored to substrate.

C. Mounting Heights: As required by accessibility regulations, unless otherwise indicated.

3.04 PROTECTION

A. Protect installed accessories from damage due to subsequent construction operations.

**END OF SECTION**

NOT FOR BIDDING

# SECTION 104400
# FIRE PROTECTION SPECIALTIES

## PART 1 GENERAL

1.01 SECTION INCLUDES

A. Fire extinguishers.

B. Fire extinguisher cabinets.

C. Accessories.

1.02 RELATED REQUIREMENTS

A. Section 061000 - Rough Carpentry: Wood blocking product and execution requirements.

B. Section 211200 - Fire-Suppression Standpipes: Valve cabinet enclosure for standpipes.

1.03 REFERENCE STANDARDS

A. NFPA 10 - Standard for Portable Fire Extinguishers; 2013.

B. UL (DIR) - Online Certifications Directory; current listings at database.ul.com.

1.04 SUBMITTALS

A. Product Data: Provide extinguisher ratings and classifications.

B. Shop Drawings: Indicate locations of cabinets and cabinet physical dimensions.

C. Manufacturer's Installation Instructions: Indicate special criteria and wall opening coordination requirements.

D. Manufacturer's Certificate: Certify that products meet or exceed specified requirements.

E. Maintenance Data: Include test, refill or recharge schedules and re-certification requirements.

1.05 FIELD CONDITIONS

A. Do not install extinguishers when ambient temperature may cause freezing of extinguisher ingredients.

## PART 2 PRODUCTS

2.01 MANUFACTURERS

A. Fire Extinguishers, Fire Extinguisher Cabinets and Accessories:
   1. JL Industries, Inc: www.jlindustries.com.
   2. Larsen's Manufacturing Co: www.larsensmfg.com.
   3. Potter-Roemer: www.potterroemer.com.
   4. Elkhart.
   5. Substitutions: See Section 016000 - Product Requirements.

2.02 FIRE EXTINGUISHERS

A. Fire Extinguishers - General: Comply with product requirements of NFPA 10 and applicable codes, whichever is more stringent.

B. Dry Chemical Type Fire Extinguishers: Cast steel tank, with pressure gage.
   1. Class ABC.
   2. Size 10 pound multi-purpose.
   3. Finish: Baked enamel, color as selected..

C. K Type Extinguiser: Provide Wet Chemical (WC- 6L) Class K fire extinguishers with standard bracket in kitchen. (Maximum travel distance from cooking fire hazard to extinguisher = 30')

NOT FOR BIDDING

1. Provide three (3) K Type Extinguishers (min).
2. Approved manufacturers: JL Industries, Larsen's, or Elkhart.

2.03 FIRE EXTINGUISHER CABINETS

A. Metal: Formed primed steel sheet.

B. Cabinet Configuration: Recessed.
1. Size to accommodate accessories.
2. Exterior nominal dimensions of 12 inch wide x 27 inch high x 8 inch deep.
3. Trim: Flat.
4. Provide cabinet enclosure with right angle inside corners and seams, and with formed perimeter trim and door stiles.

C. Door: 1/2 inch thick, reinforced for flatness and rigidity; latch. Hinge doors for 180 degree opening with continuous piano hinge.

D. Door Style and lock: Recess mounted, vertical duo style, 18 gauge pressed steel construction with Duo-Panel doors and emergency safety locks (such as Larsen Loc/Safe-T-lok).

E. Verify that cabinets are sized to accommodate extinguishers.

F. Door Glazing: Float glass, clear, 1/8 inch thick, and set in resilient channel glazing gasket.

G. Lettering: Vertical, die cut, red.

H. Cabinet Mounting Hardware: Appropriate to cabinet, with pre-drilled holes for placement of anchors.

I. Weld, fill, and grind components smooth.

J. Finish of Cabinet Exterior Trim and Door: No. 4 - Brushed stainless steel.

K. Finish of Cabinet Interior: White enameled channel.

2.04 ACCESSORIES

A. Extinguisher Brackets: Formed steel, chrome-plated.

2.05 ADDITIONAL EQUIPMENT

A. Provide 4 Dry Chemical Type fire extinguishers and cabinets in addition to those shown on contract documents.

2.06 FIRE BLANKET CABINET

A. Fire Blanket Cabinet:
1. Dimensions: 24 x 11 x 6 inches
2. Material and finish: 22 ga. steel; red powdercoat finish
3. Lettering on cabinet: white; “FIRE BLANKET”

B. Fire Blanket: 62 x 80 inches, 70% wool, meeting the Flammable Fabrics Act: Flammability of Clothing Textiles, Title 16, CFR1610

C. Manufacturers:
1. Windy City Cabinet: www.windycitycabinet.com <http://www.windycitycabinet.com>
2. Other manufacturers listed in Article 2.01.

2.07 OTHER EQUIPMENT

A. AED Cabinets: Philips Model PFE7024D
1. Surface-Mount with Audible Alarm and Strobe Light
2. Provide flexible 3D wall sign

B. Quantity: 4

NOT FOR BIDDING

C. Epinephrine Cabinet/AED Combo: MacGill Model 16284
   1. Surface-mounted non-locking cabinet with door siren
   2. Provide 3D wall sign
   3. Quantity: 2

**PART 3 EXECUTION**

3.01 EXAMINATION

A. Verify existing conditions before starting work.

B. Verify rough openings for cabinet are correctly sized and located.

3.02 INSTALLATION

A. Install in accordance with manufacturer's instructions.

B. Install cabinets plumb and level in wall openings.

C. Secure rigidly in place.

D. Place extinguishers in cabinets.

**END OF SECTION**

NOT FOR BIDDING

# SECTION 105100
# METAL LOCKERS

## PART 1 GENERAL

1.01 SECTION INCLUDES

A. Metal bases, tops, filler panels, and related components.

B. Locker benches.

1.02 RELATED REQUIREMENTS

A. Section 033000 - Cast-in-Place Concrete: Concrete base construction.

B. Section 061000 - Rough Carpentry: Wood blocking and nailers.

1.03 REFERENCE STANDARDS

A. ASTM A 1008 - Standard Specification for Steel Sheet, Carbon, Cold-Rolled, Commercial Quality.

B. ASTM A653/A653M - Standard Specification for Steel Sheet, Zinc Coated (Galvanized) or Zinc-Iron Alloy-Coated (Galvannealed) by the Hot-Dip Process; 2015.

1.04 SUBMITTALS

A. Product Data: Manufacturer's published data on locker construction, sizes and accessories.

B. Shop Drawings: Indicate locker plan layout and numbering plan.

C. Samples: Submit two samples 12 by 12 inches in size of each color scheduled.

D. Manufacturer's Installation Instructions: Indicate component installation assembly.

1.05 DELIVERY, STORAGE, AND HANDLING

A. Protect locker finish and adjacent surfaces from damage.

## PART 2 PRODUCTS

2.01 MANUFACTURERS

A. Metal Lockers:
   1. ASI Lockers: www.asilockers.com
   2. Lyon Workspace Products: www.lyonworkspace.com.
   3. Penco Products, Inc: www.pencoproducts.com.
   4. Substitutions: See Section 016000 - Product Requirements.

2.02 MATERIALS

A. Sheet Steel: ASTM A1008, commercial grade, stretcher level, phosphatized; to the following minimum thicknesses:
   1. Body and Shelf: 16 gage.
   2. Door: 14 gage.
   3. Sloping Top: 18 gage.
   4. Trim: 18 gage. (vertical and/or recess)

B. Locker Benches: Free standing type; bench top of laminated maple species wood, stained, sealed and varnished; pedestals of painted steel.

2.03 LOCKER UNITS

A. Metal Lockers - Type 'A'
   1. Basis of Design: ASI Storage Solutions Competitor Collection
   2. Type of Lockers: Welded.

NOT FOR BIDDING

3. Double Tier:
   a. Height: 72 inches (1828 mm).
   b. Size: 12 inches (305 mm) wide by 18 inches (305 mm) deep.
4. Base: Install lockers on concrete bases.
5. Material: Steel parts shall be mild cold tolled commercial quality steel, ASTM A1008.
6. Finish: Steel surfaces shall be power washed, phosphate treated and finished with an electrostatically applied 2 mm thick hybrid epoxy/polyester powder coating and baked.
7. Construction: Lockers shall be built on a unitized principle with common intermediate uprights separating units.
8. Door Frames: 16 gauge formed in a channel shape. Vertical members shall have additional flange to provide a continuous door strike. Cross frame members, 16 gauge channel shaped
   a. Single Tier Lockers: Include intermediate cross frames.
9. Doors: 14 gauge with diamond perforations, channel shaped on both the lock and hinge side, with angle formations across the top and bottom.
   a. Single tier lockers shall have an additional 16 gauge full height reinforcement channel
10. Ventilation: Locker sides and doors 20 inches (508 mm) or higher shall be perforated with diamond-shaped openings 3/4 inch (19 mm) wide by 1 1/2 inches (38 mm) high in a quantity and pattern to ensure maximum ventilation and maintain structural strength. Doors less than 20 inches (508 mm) high shall have small diamond-shaped perforations 7/16 inch (11 mm) wide by 15/16 inch (24 mm) high.
11. Body:
    a. Backs: 18 gauge.
    b. Bottoms, Tops, Sides, and Shelves: 16 gauge.
    c. Bolt spacing shall not exceed 9 inches (228 mm) o.c.
12. Hinges: Full length 16 gauge continuous piano type, riveted to both door and frame.
13. Handles: One-piece 20 gauge deep drawn stainless steel cup designed to accommodate locks.
14. Latching: A 11 gauge frame hook shall be secured to the fame. The frame shall have a padlock hasp protruding through the recessed handle. A rubber silencer shall be firmly secured to the frame at each latch hook.
15. Interior Equipment:
    a. Single tier lockers 48 inches (1.219 m) or higher shall have a shelf.
    b. Single tier lockers less than 18 inches (467 mm) deep shall have three wall hooks and one ceiling hook.
    c. Double Tier lockers shall have three wall hooks and one ceiling hook
16. Number Plates: Each locker shall have a polished aluminum number plate riveted to door face with black numerals 1/2 inch (12 mm) high.
17. Assembly:
    a. Factory Assembled.
18. Accessories:
    a. Continuous sloped top with end fillers.

B. Metal Lockers - Type 'B'
   1. Basis of Design: ASI Storage Solutions Traditional Collection.
   2. Type of Lockers: Knocked Down.
   3. Double Tier:
      a. Height: 72 inches (1828 mm).

NOT FOR BIDDING

b. Size: 12 inches (305 mm) wide by 12 inches (305 mm) deep.

4. Base: Install lockers on concrete bases.
5. Material: Steel parts shall be mild cold rolled commercial quality steel, ASTM A1008.
6. Finish: Steel surfaces shall be power washed, phosphate treated and finished with an electrostatically applied 2 mm thick hybrid epoxy/polyester powder coating and baked.
7. Construction: Lockers shall be built on a unitized principle with common intermediate uprights separating units.
8. Door Frames: 16 gauge formed in a channel shape. Vertical members shall have additional flange to provide a continuous door strike. Cross frame members, 16 gauge channel shaped.
   a. Double Tier Lockers: Include intermediate cross frames.
9. Doors: Knocked Down: 16 gauge with louvers, channel shaped on both the lock and hinge side, with angle formations across the top and bottom.
10. Body:
    a. Bottoms: 16 gauge.
    b. Tops, Sides and Shelves, Knocked Down: 24 gauge.
    c. Backs: 18 gauge.
    d. Bolt spacing shall not exceed 9 inches (228 mm) o.c.
11. Hinges: Full length 16 gauge continuous piano type, riveted to both door and frame.
12. Handles: One-piece 20 gauge deep drawn stainless steel cup designed to accommodate locks.
13. Latching: 1-3 Tiers Lifting trigger 14 gauge steel attached to the latching channel. Trigger shall have a padlock eye for use with 9/32 inch (7 mm) diameter padlock shackle. Doors to have latch clip engaging frame at three points on doors over 42 inches (1.067 m) high and two points on all other doors. Locking device to be positive automatic type, whereby locker door may be locked when open, then closed without unlocking.
14. A rubber silencer shall be firmly secured to the frame at each latch hook.
15. Interior Equipment:
    a. Double Tier lockers shall have three wall hooks and one ceiling hook
16. Number Plates: Each locker shall have a polished aluminum number plate riveted to door face with black numerals1/2 inch (12 mm) high.
17. Assembly:
    a. Knocked Down: All locker components shall be assembled with nuts and bolts.
18. Accessories:
    Continuous sloped top with end fillers.

2.04 LOCKER COMPONENTS

A. Doors: Hollow edge construction, 1-3/16 inch thick, welded construction, channel reinforced top and bottom with intermediate stiffener ribs, grind and finish edges smooth.

B. Recessed stainless steel handle with latch arrangement for locks & number plate. Provide quiet operation by encasing exposed portion of the lifting trigger in a molded ABS thermoplastic cover that provides isolation from metal-to-metal contact and be contained in a formed 20 gauge stainless steel recessed pocket; or similar means.

C. Number Plates: Provide rectangular shaped aluminum plates. Form numbers of block font style with ADA designation, in contrasting color.

D. Fabricate sloped metal tops, ends and closure pieces.

E. Provide perforated end panels and filler strips.

NOT FOR BIDDING

2.05 ACCESSORIES

A. Locker Benches: Free standing type; 1-1/4 inch bench top of laminated maple species wood, stained, sealed and varnished; pedestals of painted steel, maximum 60 inch spacing.
   1. Sizes: As shown.
   2. ADA Locker Bench:
      a. Provide one (1) per locker room.
      b. Size: 48 x 24 inches, with hardwood back.

2.06 FINISHING

A. Paint locker units in colors to be selected from manufacturer's standard color selection.

**PART 3 EXECUTION**

3.01 EXAMINATION

A. Verify that prepared bases are in correct position and configuration.

B. Verify bases and embedded anchors are properly sized.

3.02 INSTALLATION

A. Install in accordance with manufacturer's instructions.

B. Install lockers plumb and square.

C. Place and secure on locker base. Minimum pull out force 200lbs.

D. Bolt adjoining locker units together to provide rigid installation.

E. Install end panels, filler panels, sloped tops, miscellaneous panels, and other necessary related components.

F. Install accessories.

G. Replace components that do not operate smoothly.

3.03 CLEANING

A. Clean locker interiors and exterior surfaces.

3.04 SCHEDULES

| Room | Locker Type 'A' | Locker Type 'B' | |
|---|---|---|---|
| Boys Locker 148I | x | | |
| Girls Locker 148D | x | | |
| Locker 176 | | x | |
| Locker/Break/Stor 167 | | x | |
| | | | |

1. Refer to Drawings for quantities.

**END OF SECTION**

NOT FOR BIDDING

# SECTION 107500
# FLAGPOLES

## PART 1 GENERAL

1.01 SECTION INCLUDES

A. Aluminum Flagpoles.

1.02 RELATED REQUIREMENTS

A. Section 033000: Concrete base and foundation construction.

1.03 REFERENCE STANDARDS

A. AASHTO M 36 - Standard Specification for Corrugated Steel Pipe, Metallic Coated, for Sewers and Drains; 2014.

B. ASTM A123/A123M - Standard Specification for Zinc (Hot-Dip Galvanized) Coatings on Iron and Steel Products; 2015.

C. ASTM B221 - Standard Specification for Aluminum and Aluminum-Alloy Extruded Bars, Rods, Wire, Profiles, and Tubes; 2014.

D. ASTM B221M - Standard Specification for Aluminum and Aluminum-Alloy Extruded Bars, Rods, Wire, Profiles, and Tubes (Metric); 2013.

E. NAAMM FP 1001 - Guide Specifications for Design Loads of Metal Flagpoles; 2007.

1.04 SUBMITTALS

A. See Section 013000 - Administrative Requirements for submittal procedures.

B. Product Data: Provide data on poles, accessories, and configurations.

C. Shop Drawings: Indicate detailed dimensions, base details, anchor requirements, and imposed loads.

D. Maintenance Data: Provide lubrication and periodic maintenance requirement schedules.

1.05 QUALITY ASSURANCE

A. Designer Qualifications: Design flagpole foundation under direct supervision of a Professional Structural Engineer experienced in design of this Work and licensed Delaware.

1.06 DELIVERY, STORAGE, AND HANDLING

A. Spiral wrap flagpole with protective covering and pack in protective shipping tubes or containers.

B. Protect flagpole and accessories from damage or moisture.

## PART 2 PRODUCTS

2.01 MANUFACTURERS

A. Flagpoles:

1. American Flagpole: www.americanflagpole.com/#sle.
2. Concord Industries, Inc: www.concordindustries.com/#sle.
3. Pole-Tech Co, Inc: www.poletech.com/#sle.
4. Substitutions: See Section 016000 - Product Requirements.

2.02 FLAGPOLES

A. Flagpoles: Designed in accordance with NAAMM FP 1001.

1. Material: Aluminum.
2. Design: Cone tapered.

NOT FOR BIDDING

3. Mounting: Ground mounted type.
4. Nominal Height: 40 ft; measured from top of base.
5. Halyard: Interior type .

B. Performance Requirements:
1. Flagpole With Flag Flying: Resistant without permanent deformation to 90 miles/hr wind velocity; non-resonant, safety design factor of 2.5.

2.03 POLE MATERIALS

A. Aluminum: ASTM B221 (ASTM B221M), 6063 alloy, T6 temper.

2.04 ACCESSORIES

A. Finial Ball: Stainless steel, 6 inch diameter.

B. Internal Revolving Truck Assembly: Cast aluminum two-piece enclosed body, revolving, non-fouling design, single aluminum pulley mounted inside hood, stainless steel roller bearings, brass exit bushing for wire cable, and threaded aluminum spindle for attach ment to top of pole.

C. Internal Halyard Winch System: Provide one (1) complete internal halyard 1/8" stainless steel wire cable assembly with plastic coated counterweight and bead eye sling assembly. A manually operated mechanical winch having automatic brake system and operated with a removable hand crank will be concealed inside the flagpole behind flush access door having a cylinder lock.

D. Halyard Flag Snaps: Provide two (2) stainless steel swivel snap hooks with neoprene covers.

E. Flash Collar: Provide Spun Aluminum Collar to match flagpole.

F. Primer: Zinc chromate type.

2.05 MOUNTING COMPONENTS

A. Foundation Tube Sleeve: AASHTO M36M, corrugated 16 gage, 0.0598 inch steel, galvanized, depth of 42 inches, .

B. Pole Base Attachment: Flush steel base with base cover.

2.06 FINISHING

A. Metal Surfaces in Contact With Concrete: Asphaltic paint.

B. Concealed Steel Surfaces: Galvanized to ASTM A123/A123M requirements.

C. Aluminum: Mill finish.

**PART 3 EXECUTION**

3.01 EXAMINATION

A. Verify that concrete foundation is ready to receive work and dimensions are as indicated on shop drawings.

3.02 PREPARATION

A. Coat metal sleeve surfaces below grade and surfaces in contact with dissimilar materials with asphaltic paint.

3.03 INSTALLATION

A. Install flagpole, base assembly, and fittings in accordance with manufacturer's instructions.

B. Fill foundation tube sleeve with sand, and compact.

C. Install foundation plate and centering wedges for flagpoles base set in concrete base and fasten.

NOT FOR BIDDING

3.04 TOLERANCES

A. Maximum Variation From Plumb: 1 inch.

3.05 ADJUSTING

A. Adjust operating devices so that halyard and flag function smoothly.

**END OF SECTION**

NOT FOR BIDDING

# SECTION 114000
# FOODSERVICE EQUIPMENT

## PART 1 GENERAL

### 1.01 DESCRIPTION

A. Scope: Furnish all labor, materials, services, equipment and appliances required to provide and deliver all foodservice equipment hereinafter specified into the building, uncrate, assemble, hang, set-in-place, level, and completely install, exclusive of final utility connections.

B. Related Work Specified Elsewhere:

1. All plumbing, electrical and ventilating work required in conjunction with commercial foodservice equipment including rough-in to points indicated on mechanical drawings, and final connections from rough-in points, electrical service to points of connection and final connections shall be by Divisions 22, 23 and 26.
2. Refrigeration work will be done by the Kitchen Equipment Contractor except for electrical and plumbing connections to and between compressors, blower coils, controls, etc. These final connections shall be by Divisions 22 and 26.
3. All traps, steam traps, grease traps, line strainers, tail pieces, valves, mixing valves, backflow preventor, stops, shut-offs, and fittings necessary for equipment specified will be furnished and installed under mechanical contract by Division 22 unless specifically called for otherwise under each item.
4. All line and disconnect switches, safety cut-offs and fittings, convenience boxes or other electrical controls, fittings and connections will be furnished and installed under electrical contract by Division 26, unless specifically indicated otherwise in the item specifications. Starting switches for certain specified pieces of foodservice equipment are to be provided by Kitchen Equipment Contractor. Those starting switches, if furnished loose as standard by Foodservice Manufacturers (other than fabricated items), shall be mounted and wired complete under Division 26.
5. Any sleeves or conduit required for refrigeration, syrup tubing, or carbonation tubing will be furnished and installed under Division 22.
6. Unless specifically called for in the Item Specifications, ventilating fans and all duct work between same and ceiling rough-in openings, and from same to discharge opening in building will be furnished and installed by Division 22.

### 1.02 DEFINITIONS

A. All references to the terms "Contractor", "Kitchen Equipment Contractor", or "K.E.C." in the specifications and/or on the drawings shall be defined to mean the Kitchen Equipment Contractor.

B. All references to the term "Owner" in the specifications and/or on the drawings shall be defined to mean the Owner or Owner's designated representative and the Foodservice Equipment Consultant.

C. All references to the term "Consultant" or "Foodservice Equipment Consultant" in the specifications and/or on the drawings shall be defined to mean **NYIKOS ASSOCIATES, INC.** its employees, and authorized representatives and is referred to throughout the contract documents as if singular in number and masculine in gender.

D. The phrase "The K.E.C. shall" or "by the K.E.C.", as applicable, is understood to be included as a part of each sentence, paragraph or article of these specifications unless otherwise indicated or specified.

NOT FOR BIDDING

1.03 QUALITY ASSURANCE

A. Qualification of Suppliers:
   1. Commercial foodservice equipment suppliers shall submit satisfactory evidence of compliance with the following qualifications and conditions to be approved.
      a. Successful completion of jobs of comparable scope.
      b. Have manufacturer's authorization to distribute and install specified factory items of equipment.
      c. Maintain a permanent staff experienced in the installation of foodservice equipment and preparation of professional style rough-in drawings and brochures.
      d. Maintain or have access to fabrication shop meeting N.S.F. requirements. If other than foodservice equipment suppliers own fabrication shop, obtain Consultant approval of fabrication shop desired to be used.
      e. Maintain or have access to a readily available stock of repair and replacement parts, together with authorized service personnel.

B. Qualification of Fabricators:
   1. Fabricators shall be an N.S.F. approved organization with trained personnel and facilities to properly design, detail and fabricate equipment in accordance with the specifications and standard details contained herein.
   2. Custom fabricated equipment shall bear the National Sanitation Foundation seal of approval and listed as such under N.S.F. Standards No. 2 and No. 33.
   3. Only one (1) fabricator shall be used for this project, and all equipment will be fabricated at the same shop. Where units cannot be fully shop-fabricated, complete fabrication at project site.
   4. Acceptable fabricators are:
      a. Pro Stainless, Inc., Keyser, WV
      b. Commercial Stainless, Inc., Bloomsburg, PA
      c. Keystone Custom Fabricators, Inc.; Elizabeth, PA.
      d. Southern Equipment Fabricators, Inc.; Columbia, SC
      e. Stainless Unlimited, Inc.; Waldorf, MD
      f. Other fabricators, as approved by Consultant.

C. Qualification of Manufacturers:
   1. Manufacturers shall be regularly engaged in the production of items furnished and shall have demonstrated the capability to furnish similar equipment that performs the functions specified or indicated herein.

D. Standard Products:
   1. Materials, products, and equipment furnished under this contract shall be the standard items of manufacturers regularly engaged in the production of such materials, products, and equipment and shall be of the manufacturer's latest design that complies with the specifications which have been produced and used successfully on other projects and in similar applications.
   2. Discrepancies within contract documents should immediately be brought to the attention of the Consultant in writing for clarification prior to fabrication or ordering of standard items.

1.04 PLANS & SPECIFICATIONS

A. Specifications and drawings have been prepared to form the basis for procurement, erection, start-up and adjustment of all equipment in this contract. Plans and specifications shall be considered as mutually explanatory and work required by one, but not the other, shall be performed as though required by both. Items required by one, but not by the other shall be provided as though required by both. Work shall be accomplished as called for in specifications and shown on drawings, so that all items of equipment shall be completely functional for

NOT FOR BIDDING

purpose for which they were designed. When there is any discrepancy between drawings and specifications, drawings shall govern. Bidders should seek clarification in writing of any discrepancies from the Consultant prior to bidding.

1.05 SUBMITTALS

A. General Requirements:
   1. Assemble and submit all shop drawings, rough-in drawings, brochures, color samples, etc. as a complete package. There will be no review of partial submittals.
   2. Any and all costs, to all trades and parties involved, arising from delay of project due to non-submittal of the complete package by the K.E.C. within a reasonable time period shall be borne solely by the K.E.C.
   3. Identify each submittal by project name, date, contractor, submittal name, and any other necessary information to distinguish it from other submittals.

B. Shop Drawings:
   1. Submit shop drawings electronically in PDF format, drawn on sheets equal in size to Contract Documents of equipment specified for custom fabrication including all accessories attached to each item.
   2. Drawings shall be detailed and fully dimensioned to a minimum scale of 3/4"=1'-0" for plan and elevation views, and 1-1/2"=1'-0" for sections, based on the floor plan(s) and following item specifications. Drawings will be checked for thoroughness, accuracy, completeness, neatness, and returned for corrections, if necessary.

C. Rough-in Drawings:
   1. Submit rough-in drawings electronically in PDF format, drawn on sheets equal in size to Contract Documents of detailed arrangement plans professionally prepared from architects dimensioned plans (not traced from Contract Documents) at a minimum scale of 1/4"=1'-0".
   2. Equipment Layout Plan showing arrangement of all items specified and identified on schedule of equipment listing item number, description, quantity, manufacturer, model number, and remarks.
   3. Ventilation Plan showing dimensioned locations of all duct openings for ventilators and dishmachines identifying size, c.f.m. required (exhaust and supply), static pressures, and connection heights.
   4. Plumbing/Electrical Plans showing dimensioned locations, sizes, elevations and capacities of all utility services required for each item of equipment in relation to finished walls, columns, and heights above finished floor.
   5. Special Conditions Plan showing exact dimensions and details of all masonry bases, floor depressions, critical partition locations/heights, wall openings, reinforcing for wall and/or ceiling mounted equipment, and conduit locations for soda and compressed gas lines.

D. Equipment Brochures:
   1. Submit electronic files in PDF format of manufacturer's illustrations and technical data for approval prior to procurement. All items of Standard Manufacture shall be submitted, including items purchased to be built into fabricated equipment. Each illustration shall be marked to accurately describe the item to be furnished as specified. Include all deviations from standard information (i.e., voltage, phase, load, etc.).
   2. Include a separate information sheet ahead of each illustration sheet showing all service connection sizes, electrical requirements, loads, consumptions, and all accessories specified.
   3. Manufacturer's suggested schematic drawings for connection of mechanical and electrical services for such items as booster heaters, disposers, or any other item of equipment that may require the same.

NOT FOR BIDDING

E. Miscellaneous Shop Drawings:
   1. Submit electronic files in PDF format of manufactured equipment specified requiring clarification and approval such as, walk-in cooler/freezer drawings, ventilator drawings, utility raceway drawings, and refrigeration system drawings.

F. Operation and Maintenance Manuals:
   1. Submit electronic files in PDF format for all mechanically operated equipment of standard manufacture. Include operating and cleaning/maintenance instructions, parts listing, recommended parts inventory listing and purchase source, copy of warranties, and similar applicable information.
   2. Brochure covers shall bear the job name, date, and name of contractor.

G. Manufacturer's List:
   1. The K.E.C. shall submit electronic files in PDF format a list of all manufacturer's representatives of the food service equipment such as convection ovens, ranges, etc., and their authorized service agencies' addresses and telephone numbers, to be presented after submission of manufacture data.

H. Samples:
   1. Samples of materials, products, and fabrication methods, shall be submitted for approval upon request at no additional cost, before proceeding with work.

I. Re-submission Requirements:
   1. Shop Drawings:
      a. Revise initial drawings as required and resubmit in accordance with submittal procedures.
      b. Indicate on drawings all changes which have been made in addition to those requested by Consultant.
   2. Product Data and Samples:
      a. Submit new data and samples as required for initial submittal.
      b. Make all re-submittals within fourteen (14) working days from date of Consultants previous action.

J. Approvals:
   1. After approval of the submittals listed above, furnish as many prints and copies as are required for the various trades, the Owner, the Architect, and the Consultant.
   2. The approval of the shop drawings will be general and shall not relieve the K.E.C. of responsibility for proper fitting, finishing, quantities, and erection of work in strict accordance with the contract requirements, nor does it relieve him of the responsibility of furnishing material and workmanship not indicated on approved shop drawings but required for the completion of his work.
   3. Approval by the Consultant and/or Owner of the manufacturer's data submitted by the K.E.C. does not waive the responsibility of K.E.C. to furnish each item of equipment in complete compliance with the specifications and drawings. Discrepancies between Contract Documents and furnished equipment shall be corrected even after approval and installation of this equipment at no additional cost to the Owner.

1.06 PRODUCT DELIVERY, STORAGE AND HANDLING

A. Delivery:
   1. Equipment shall be delivered to the job site only after the building is weather-safe and vandal-safe.

B. Storage:
   1. Store equipment in an area convenient to the point of installation in such a way that it is protected from the weather and job hazards.

NOT FOR BIDDING

C. Protection:
   1. Wrapping and protective coatings shall remain on all items until ready for use and in the case of stainless steel items, until installation is complete and the job is ready for cleaning.

D. Damage:
   1. All responsibility shall rest with the K.E.C. for any damage or loss incurred prior to final acceptance. Such items as may be lost or damaged shall immediately be replaced or repaired to a new condition to the complete satisfaction of and at no additional cost to the Owner.

1.07 JURISDICTION TRADE AGREEMENTS AND RESTRICTIONS

A. Include the work specified, shown or reasonably infer able as part of foodservice equipment. Portions of this work may be subcontracted to those qualified to do such work, as may be necessary because of jurisdictional trade agreements and restrictions.

1.08 REGULATIONS AND CODES

A. Except as otherwise indicated, each item of equipment shall comply with the latest current edition of the following standards as applicable to the manufacture, fabrication, and installation of the work in this section.
   1. N.S.F. Standards: Comply with National Sanitation Foundation Standards and criteria, and provide N.S.F. "Seal of Approval" on each manufactured item and major items of custom-fabricated work.
   2. U.L. Standards: For electrical components and assemblies, provide either U.L. labeled products or, where no labeling service is available, provide a complete index of the components used as selected from the U.L. "Recognized Component Index".
   3. A.N.S.I. Standards: For gas-burning equipment, comply with A.N.S.I. Z21-Series standards. Comply with A.N.S.I. B57.1 for compressed gas cylinder connections and with applicable standards of the Compressed Gas Association for water connection air gaps and vacuum breakers.
   4. A.G.A.: All gas-fired equipment shall be A.G.A. Approved, equipped to operate on the type gas available at the job site and shall contain 100% automatic safety shut-off devices.
   5. N.F.P.A. Standards: Comply with N.F.P.A. Bulletin 96 for exhaust systems and with N.F.P.A. Bulletins 17 & 96, and U.L. 300 for fire extinguishing systems.
   6. A.S.M.E. Code: Comply with A.S.M.E. boiler code requirements for steam generating and steam heated equipment. Provide A.S.M.E. inspection, stamps, and certification of registration with National Board.
   7. National Electric Code: Comply with N.E.C. Volume 5 for electrical wiring and devices included with foodservice equipment.
   8. All authorities having jurisdiction over this type of equipment and/or installation.
   9. Where specifications and/or drawings require mechanical, electrical or refrigeration work to be performed, such work shall be done in strict conformance to other portions of the Base Building Specification which sets forth standards for this type of work.
   10. Where there exists two standards or codes for one type of work, the stricter method shall govern.

1.09 WARRANTIES

A. Warrantee in writing all equipment and fabrication against defects and workmanship for a period of two (2) years from date of acceptance.
   1. Each piece of mechanical equipment shall be listed, together with the authorized service and repair agency whom the Owner will call should malfunctions occur within the two-year (2) guarantee period.

NOT FOR BIDDING

B. Refrigeration system compressors shall be warranted for five (5) years by the manufacturer. Free refrigeration service, including parts and labor, shall be furnished for two (2) years from date of acceptance, unless otherwise specified.

1.10 JOB CONDITIONS

A. Visit the job site to field check actual wall dimensions and roughing-in and shall be responsible for fabricating and installing the equipment in accordance with the available space and utility services as they exist on the job site.

B. Check all door openings, passageways, elevators, etc., to be sure that the equipment can be conveyed to its proper location within the building and if necessary, check the possibility of holding wall erection, placement of doorjambs, windows, etc. for the purpose of moving the equipment to its proper location with the Contractor. Any removal and rebuilding of walls, partitions, doorjambs, etc. necessary to place the equipment, or if caused by incorrect information on the Contractor's drawings, shall be done at the expense of the K.E.C., at no additional cost to the Owner.

C. Notify the Consultant and Owner before fabrication of equipment of any discrepancies between plans and specifications and actual conditions on the job.

D. Before finished floors, walls, and/or ceilings are in place, physically check the location of all "rough-ins" at the job site. Report discrepancies in writing.

E. Any changes required after fabrication has been started to ensure equipment accurately fitting the space as it exists and conforming to actual field dimensions on the job shall be made at no additional cost to the Owner.

F. If special hoisting equipment and operators are required, include such cost as part of the bid for this work.

1.11 CHANGES IN THE WORK

A. The Owner reserves the right to require reasonable modification to be made in the routing of work and relocation of equipment. This specifically refers to conditions where interference occurs or where more desirable accessibility can be obtained or whose materials cannot be installed because of structural or mechanical conditions encountered. Such changes shall be made at no additional cost to the Owner.

1.12 PATENTS

A. Hold harmless and save the Owner and its officers, consultants, servants and employees from liability of any nature or kind, including costs and expenses for or on account of any copyrighted, patented, or un-patented invention, process, trademark, design, device, material, article, or appliance manufactured or used in the performance of the contract, including its use by the Owner, unless otherwise specifically stipulated in the Contract Documents.

B. If the Contractor has information that the process or article specified is an infringement of a patent, he shall be responsible for such loss unless he promptly gives such information to the Owner in writing. The contract price shall include all royalties or costs arising from the use of any or all of the above which are, in any way, involved in the contract.

1.13 CONTRACTOR'S WARRANTY

A. The Contractor represents and warrants:
   1. That he is financially solvent and that he is experienced in and competent to perform the types of work or to furnish the plans, materials, supplies or equipment, to be so performed or furnished by him.
   2. That he is familiar with all Federal, State, municipal, and department laws, ordinances, orders, and regulations, which may, in any way, affect the work of those employed therein,

NOT FOR BIDDING

including, but not limited to, any special acts relating to the work or to the project of which it is a part.

3. That such temporary and permanent work required by the contract as is to be done by him can be satisfactorily constructed and used for the purpose for which it is intended and that such construction will not injure any person or damage any property.
4. That he has carefully examined the plans, specifications, addenda, if any, and the site of the work and that, from his own investigations, he has satisfied himself as to the nature and location of the work, the character, quality, and quantity of materials likely to be encountered, the character of equipment and other facilities needed for the performance of the work, the general and local conditions, and all other materials which may, in any way, affect the work or its performance.
5. That he has satisfied himself as to the existing openings and accesses to the foodservice area through which his equipment shall be required to pass and that he is responsible for his equipment being delivered in as many sections as necessary to conform to the available space dictated by these existing limitations.

1.14 SUBSTITUTIONS

A. Bids submitted shall be for the specific manufacturer and model, size, capacity, and accessories, as specified or shown on the drawings.

B. The K.E.C. may quote upon brands and models of equipment other than those specified as a substitute, but he must also bid the primary item. In the event that it is desired to request approval of substitute material, product, article, process, or item of equipment in lieu of that which is specified, submit a written request at the time of submitting bid on a separate sheet attached to, but not part of, the base bid, setting forth the proposed substitution in detail, including an itemized analysis of the addition or deduction in the amount of the contract, if any, which will result if the substitution is approved. Each such request shall include a complete description of the proposed substitute, the name of the material or equipment for which it is to be substituted, drawings, cuts, performance and test data and any other data or information necessary for a complete evaluation.

C. The Contractor shall be held responsible for additional costs to himself or any other prime contractor for changes required to install materials, devices, equipment, etc., which the Contractor has substituted for that specified.

D. The Owner reserves the right to award a contract or contracts based upon the inclusion or exclusion of one or more of the alternate estimates. The description of all workmanship and materials under the various headings of the specifications shall have the same meaning and force when applied to similar workmanship and materials in the alternate. If the descriptions are not specific, the workmanship shall be the best quality and the materials the best commercial grade.

E. Whenever any product is specified in the Contract Documents by reference to the name, trade name, make, or catalog number of any manufacturer or supplier, the intent is not to limit competition but to establish a standard of quality which is necessary for the project. Products of other manufacturers meeting the established criteria will be considered. However, please take note that the plumbing, electrical, steam, heating, ventilating, and air-conditioning drawings prepared by the consulting engineers, have been engineered based on the first product named under each item number designation. Therefore, any other product which is submitted for approval in lieu of the primary item specified, shall conform to the rough-in requirements established for the first product named, as well as physical size and building construction requirements.

F. Any equipment listed, which is not in accordance with the provisions of these specifications, will be rejected. If the Contractor fails to submit for approval within the specified time the list

NOT FOR BIDDING

of equipment as required herein, the Consultant shall then have the right to make the final equipment selection. The selection made by the Consultant shall strictly conform to these specifications and will be final and binding, and the items shall be furnished and installed by the Contractor without change in the contract price at the time of completion.

G. It shall be the responsibility of the K.E.C. to prove that substitutions are equal to specified items. **NYIKOS ASSOCIATES, INC.** as the Owner's representative, shall be the determining authority as to the acceptability or equality of the substitutions. No substitutions shall be approved after bids are received.

1.15 DESIGN/MODEL CHANGE, DISCONTINUED ITEMS

A. All equipment specified shall be of latest design. Any improvements made in design and construction of prefabricated items before equipment is actually delivered to the project site, shall be incorporated in equipment, at no additional cost, provided such incorporation does not delay delivery date of equipment.

B. In the event of an item being discontinued after specified and prior to delivery to project site, the K.E.C. shall be responsible for notifying the Consultant in writing of the discontinued item and request an alternate of equal performance, including all accessories at no additional cost to the Owner.

**PART 2 PRODUCTS**

2.01 GENERAL

A. The equipment and its component parts shall be new and unused. All items of standard manufactured equipment shall be current models at the time of delivery. All parts subject to wear, breakage, or distortion shall be accessible for adjustment, replacement, and repair.

B. Means shall be provided to ensure adequate lubrication for all moving parts. All oil holes, grease fittings, and filler caps shall be accessible without the use of tools.

C. The design of the equipment shall be such as to provide for safe and convenient operation. Covers or other safety devices shall be provided for all items of equipment presenting safety hazards. Such guards or safety devices shall not present substantial interference to the operation of the equipment. All guards shall provide easy access to the guarded parts.

D. Trim shall not be an acceptable substitute for accuracy and neatness. When trim is required and accepted by the Consultant and the Owner in lieu of rejection of items of equipment, it shall be the K.E.C.'s responsibility to provide same at no additional cost.

E. Unless otherwise specified herein, no material lighter than #20 gauge shall be incorporated into the work. All gauges for sheet iron and sheet steel shall be U.S. Standard Gauges, and finished equipment gauge thickness shall not vary more than 5% plus or minus from the thickness indicated below.

| GAUGE | THICKNESS | GAUGE | THICKNESS |
|---|---|---|---|
| #10 | 0.1406 | #16 | 0.0625 |
| #12 | 0.1094 | #18 | 0.0500 |
| #14 | 0.0781 | #20 | 0.0375 |

F. Materials or work described in words which have a well known and acceptable trade meaning shall be held to refer to such accepted meanings.

G. Adhesives and sealants applied within the building waterproofing envelope: Comply with low-emitting requirements in Division 01 Section “Indoor Air Quality Requirements.”

H. Composite Wood and Laminating Adhesives (shop and field applied): Contain no added urea formaldehyde resins.

NOT FOR BIDDING

## 2.02 MATERIALS

A. Refrigeration Systems:

1. Self-contained:
   a. Whether the units be top-mounted or cabinet-mounted, they shall be started by the K.E.C. and shall be tested for maintenance of temperature.
   b. All units shall be furnished with condensate evaporators.
2. Remote: Provide and install complete refrigeration system(s), charged, started, and operating properly, according to the Item Specifications and the following.
   a. Single stage compressors with air-cooled condensers operating within the recommended range of suction discharge pressure of economical operation and within the required capacity.
   b. All units shall be new and factory assembled, to operate with the refrigerant specified. Refrigerant R-404A shall be used for all medium and low temperature applications. Due to the unsettled nature of refrigerants, no refrigerant shall be used with a phase-out date of less than ten (10) years from the date of installation.
   c. Compressors shall be accessible hermetic type, Copeland or approved equal, and shall be equipped with high-low pressure control, liquid line drier, sight glass, suction and discharge vibration eliminator, and head pressure control.
   d. The system shall have a factory mounted and pre-wired control panel complete with main fused disconnect, compressor circuit breakers, contactors, and time clocks wired for single point power connection.
   e. The supporting frame shall be constructed of structural steel, fully welded, and protected against rust and corrosion with one (1) coat primer, and two (2) coats paint, unless otherwise specified.
   f. Systems specified for outdoor installation shall be fully protected in a weather-proofed housing with louvered front panel and hinged top, constructed to resist rust and corrosion, and furnished with low ambient controls. Crankcase heater shall be provided with every compressor.
3. Where specifications call for pre-piped lines (i.e., from a fixture to a valve compartment, etc.), provide such work in strict conformance with other sections of the specifications which set forth standards for this type of work or in conformity with the requirements of the Board of Fire Underwriters or ASHRAE Standards, whichever is greater.
4. Each refrigeration item specification is written to provide minimum specifications and scope of work. All refrigeration equipment shall be designed and installed to maintain the following general temperatures unless otherwise specified.

| TYPE | | REFRIGERATORS | FREEZERS |
|---|---|---|---|
| a. | Walk-In | +35º F./1.7º C. | -10º F./-23.3º C. |
| b. | Reach-In | +35º F./1.7º C. | -10º F./-23.3º C. |
| c. | Undercounter | +35º F./1.7º C. | -10º F./-23.3º C. |
| d. | Fabricated | +35º F./1.7º C. | -10º F./-23.3º C. |
| e. | Cold Pans | +0º F./-17.8º C. | |
| f. | Work Rooms | +50º F./10º C. | |

5. Provide (including payment if subcontracted) all electrical and refrigeration components needed by the completed system and complete (or have completed by the respective trades) all connections of and to said components.
6. An evaporator coil defrost system shall be provided and installed by the K.E.C. on all refrigeration systems designed to operate at an evaporator coil temperature of less than +35º F. Evaporator coil units provided without electric defrost feature shall be installed with a solenoid valve in the liquid line, controlled by the time clock so as to shut off the flow of refrigerant and allow the compressor to pump down and shut off by activation of

NOT FOR BIDDING

the pressure control switch.

7. Verify the requirements of and provide any or all additional refrigeration specialty(s) or component(s) required or recommended by the manufacturer for proper operation under the specific operating conditions and location of each system specified.
8. Verify and provide manufacturer's certification that the equipment selection hereinafter specified for each refrigeration system is properly sized and shall meet the operating requirements set forth for each system regarding maintaining specified operating temperature, hours of compressor running time, and system pressures and velocities as recommended by the equipment manufacturer(s).
9. All refrigeration systems shall be installed and wired in strict conformance with the manufacturer's instructions and recommendations.

B. Motors and Heating Elements:

1. Motors up to and including 1/2 HP shall be wired for 120 volt, single phase service. Motors larger than 1/2 HP shall be wired for 208 volt, single or three phase service as indicated. Motors shall be of the drip-proof, splash-proof, or totally enclosed type, having a continuous duty cycle and ball bearings, except small timing motors which may have sleeve bearings. All motors shall have windings impregnated to resist moisture. Motors located where subject to deposits of dust, lint, or other similar matter shall be of the totally enclosed type. Motors shall have ample power to operate the machines for which designated under full load operating conditions without exceeding their nameplate ratings. Insulation shall be N.E.M.A. Class B or better.
2. Heating elements having a connected load up to and including 1,000 watts shall be wired for 120 or 208 volt, single phase service, or as indicated on the drawings.
   a. Any heating element larger than 1,000 watts or any combination of elements in one fixture totaling more than 1,000 watts shall be wired for 208 volt single or three phase service, as indicated on the drawings.
   b. Fixtures having multiple heating elements may be wired for three phase service with the load balanced as equally as possible within the fixture.

C. Switches and Controls:

1. Provide recognized commercial grade signals, "on-off" pushbuttons or switches, and other speed and temperature controls as required for operation of each item, complete with pilot lights and permanent graphics, conspicuously labeled, to assist the user of each item.
2. Mount switches and controls directly adjacent the piece of equipment for which it involves, on operator's side of counter body apron, out of view to the public.
3. Provide on or for each motor-driven appliance or electrical heating or control unit, a suitable control switch or starter of the proper type and rating and in accordance with Underwriter's Code wherever such equipment is not built in. All other line switches, safety cut-outs, control panels, fuse boxes, other control fittings and connections, when not an integral part of the unit or furnished loose by the manufacturer will be furnished and installed by the Electrical Contractor, unless otherwise specified. All electrical controls, switches, or devices provided loose for field installation as a part of the item specified shall be installed in the field by the Contractor unless otherwise specified.
4. Appliances shall be furnished complete with motors, driving mechanisms, starters, and controllers, including master switches, timers, cut-outs, reversing mechanisms, and other electrical equipment if and as applicable.

D. Cover Plates:

1. All controls mounted on vertical surfaces of fixtures shall be set into recessed die stamped stainless steel cups, or mounted onto removable cover plates in such a fashion as to not protrude or interfere with the operation of each item.
2. Cover plates shall be furnished and installed for all electrical outlets, receptacles, switches

NOT FOR BIDDING

and controls furnished by the K.E.C., and shall match the material and finish of the equipment to which they will be fastened.

E. Wiring and Conduit:
   1. Wiring shall be properly protected in N.E.M.A. and U.L. approved metal enclosures. Only rigid steel conduit shall be used, zinc coated where unexposed and chrome plated where exposed. All wiring shall be run concealed wherever possible.
   2. All equipment furnished under this contract shall be so wired, wound, or constructed so as to conform with the electrical characteristics at the job site.
   3. Wiring and connection diagrams shall be furnished with electrically operated machines and for all electrically wired fabricated equipment.
   4. Furnish all foodservice equipment completely wired internally using wire and conduit suitable for a wet location. Where an Electrician's services are required, the work shall be done in the K.E.C.'s factory or at his expense at the job site at no additional cost to the Owner. Provide all electrical outlets and receptacles required to be mounted on or in fabricated equipment and interconnect to a master circuit breaker panel with all wires neatly tagged showing item number, voltage characteristics, and load information. Final connection shall be made by the Electrical Contractor.

F. Cords, Plugs, and Receptacles:
   1. The Electrical Contractor shall provide three- or four-wire, grounding-type receptacles for all wall and floor mounted outlets to be used for plug-in equipment with characteristics as noted on the drawings. Provide "Hubbell" three wire or four-wire grounding-type connectors and neoprene cords installed on each item of plug-in equipment, as indicated on drawings and item specifications.
   2. K.E.C. shall coordinate with the Electrical Contractor so that the receptacles provided will match the specific plugs provided as part of the plug-in equipment. Any changes in cords and plugs required in the field due to lack of coordination between the Electrical Contractor and the K.E.C. shall be the latter's responsibility.
   3. Reduce the length of all cords furnished with the specified equipment to a suitable or appropriate length so they do not interfere with other equipment or operations.
   4. Pedestal receptacles that are part of fabricated equipment exposed to view, shall be similar to T&S Model No. B-1508DD single face, single gang or Model No. B-1528DD single face, double gang.

G. Water Inlets:
   1. Water inlets shall be located above the positive water level wherever possible to prevent siphoning of liquids into the water supply system. Wherever conditions shall require a submerged inlet, a suitable type of check valve (except in jurisdictions where check valves are prohibited) and vacuum breaker shall be placed on the fixture to form a part of same to prevent siphoning. Where exposed to view, piping and fittings shall be chrome-plated.

H. Drain Lines:
   1. Plumbing Contractor shall provide and install indirect waste lines from equipment which will discharge into floor drains or safe wastes in accordance with Plumbing Rough-In Plans, chrome-plated where exposed. Extend to a point at least 1" (or as required by local codes) above the rim of the floor drain, cut bottom on 45° angle and secure in position.
   2. All horizontal piping lines shall be run at the highest possible elevation and not less than 6" above finished floor, through equipment where possible.
   3. No exposed piping in or around fixtures or in other conspicuous places shall show tool marks of more than one thread at the fitting.
   4. All steam operating valves on or in fabricated and purchased foodservice equipment shall be provided with composition hand wheels, which shall remain reasonably cool in service.

NOT FOR BIDDING

5. Provide suitable pressure regulating valves for all equipment with such components that might reasonably be expected to be affected over a period of time by adverse pressure conditions.

I. Faucets, Valves and Fittings:
1. All sinks shall be fitted with chromium plated, swing spout faucets of same manufacturer throughout as follows, or otherwise specified in Item Specifications.
   a. Prep and Utility Sinks:
      1.) Splash-Mounted:
         a.) T&S Brass and Bronze Works, Inc., Model B-231 with aerator.
         b.) Fisher Manufacturing Company, Model 3253 with aerator.
      2.) Deck-Mounted:
         a.) T&S Brass and Bronze Works, Inc., Model B-221 with aerator.
         b.) Fisher Manufacturing Company, Model 3313 with aerator.
   b. Pot Sinks:
      1.) Splash-Mounted:
         a.) T&S Brass and Bronze Works, Inc., Model B-230.
         b.) Fisher Manufacturing Company, Model 3214.
2. Pre-Rinse Assemblies:
   a. Splash-Mounted:
      1.) T&S Brass and Bronze Works, Inc., Model B-113-BJ with B-109 wall bracket.
      2.) Fisher Manufacturing Company, Model 2210 with 2902-12 wall bracket.
   b. Deck-Mounted:
      1.) T&S Brass and Bronze Works, Inc., Model B-113-BJ with B-510 mixing valve and B-109 wall bracket.
      2.) Fisher Manufacturing Company, Model 2810 with 2805-CV mixing valve and 2902-12 wall bracket.
3. Vacuum Breakers:
   a. General Use:
      1.) Fisher Manufacturing Company, Model 3990-8000.
   b. Disposers:
      1.) Splash-Mounted:
         a.) T&S Brass and Bronze Works, Inc., Model B-455.
         b.) Fisher Manufacturing Company, Model 3990.
      2.) Deck-Mounted:
         a.) T&S Brass and Bronze Works, Inc., Model B-456.
         b.) Fisher Manufacturing Company, Model 3991.
4. Trough Inlets:
   a. Fisher Manufacturing Company, Model No. 2905.
5. Other specialty faucets, pre-rinse assemblies, vacuum breakers, and trough inlets, as specified under Item Specifications.
6. All sink compartments shall be fitted with 2" NPT male, chrome-plated, brass rotary waste valves complete with overflow assemblies and stainless steel strainers.
   a. Prep and General Utility Sinks:
      1.) Fisher Manufacturing Company, Model No. 6100.
   b. Pot Sinks:
      1.) Fisher Manufacturing Company, Model No. 6102.
7. Refer to Division 22 for all other fittings.

J. Metals and Alloys:
1. Stainless steel sheets shall conform to ASTM 240, Type 302, Condition A, 18-8, of U.S. Standard Gauges as previously indicated under paragraph 2.1.E.

NOT FOR BIDDING

a. All exposed surfaces shall have a No. 4 finish. A No. 2B finish shall be acceptable on surfaces of equipment not exposed to view.
b. All sheets shall be uniform throughout in color, finish, and appearance.
c. Rolled shapes shall be of cold rolled type conforming to ASTM A36.

2. Stainless steel tubing and pipe shall be Type 304, 18-8, having a No. 4 finish, and shall conform to either ASTM A213 if seamless or ASTM A249 if welded.
3. Where galvanized metal is specified, it shall be copper-bearing galvanized iron, cold-rolled, stretcher leveled, bonderized, re-rolled to insure a smooth surface, and used in the largest possible sizes with as few joints as necessary.
4. Galvanizing shall be applied to rolled shapes in conformance with ASTM A123, and to sheets in conformance with ASTM A526, coating designation G-90.

K. Castings:
1. Castings shall consist of corrosion resisting metal (white metal) containing not less than 30% nickel. All castings shall be rough ground, polished, and buffed to bright lustre and free from pit marks, runs, checks, burrs, and other imperfections. In lieu of corrosion resisting metal castings, die-stamped or cast 18-8 stainless steel will be acceptable.

L. Hardware and Casters:
1. All hardware shall be of heavy-duty type, satin finished chromium plated brass, cast or forged or highlighted stainless steel of uniform design. All hardware shall be a well-known brand, and shall be identified by the manufacturer's name and model number for easy replacement of broken or worn parts.
2. Casters on custom-built equipment shall be heavy-duty type, ball bearing, solid or disc wheel, with grease-proof rubber, neoprene or polyurethane tire. Wheel shall be 5" diameter, minimum width of tread 1-3/16", minimum capacity per caster 250 pounds, unless otherwise noted.
a. Solid material wheels are to be provided with stainless steel rotating wheel guard.
b. All casters shall have sealed wheel and swivel bearings, polished plated finish and be N.S.F. approved.
c. All equipment specified with casters shall have a minimum of two (2) with brakes installed on opposite corners, unless otherwise noted.

M. Locks:
1. When specified, doors and drawers of all custom fabricated or manufactured equipment shall be provided with cylinder locks, disc tumbler type with stainless steel faceplate as manufactured by Standard-Keil Mfg. Co., or approved equal.
a. Provide two (2) sets of keys for each lock.
b. All locks shall be keyed alike, except at cashiers stations or unless otherwise specified.

N. Thermometers:
1. All fabricated refrigerated compartments shall be fitted with exterior mounted, adjustable, dial or digital thermometers with flush bezels, and shall be calibrated after installation.

O. Sealants:
1. Sealant, wherever required, shall conform to ASTM C 920; Type S Grade NS, Class 25, Use Nt, with characteristics that when fully cured and washed meets requirements of Food and Drug Administration Regulation 21 CFR 177.2600 and N.S.F. RTV-732 for use in areas where it comes in contact with food.
2. Dow-Corning #780 or General Electric "Silastic", or approved equal, in either clear or approved color to match surrounding surfaces and applied in accordance with sealant manufacturers recommendations for a smooth, sealed finish.

P. Millwork:

NOT FOR BIDDING

1. All millwork materials shall be free from defects impairing strength, durability, or appearance; straight and free from warpage; and of the best grade for their particular function. All wood shall be well seasoned, kiln dried, and shall have an average moisture content of 8%, a max. of 10% and a min. of 5%.
2. Plywood and other woodwork of treatable species, where so required by code, shall be fire-retardant treated to result in a flame spread rating of 25 or less with no evidence of significant progressive combustion when tested for 30 minutes duration under ASTM E84 and shall bear the testing laboratory mark on the surface to be concealed.
3. Concealed softwood or hardwood lumber shall be of poplar, douglas fir, basswood, red oak, birch, maple, beech or other stable wood and shall be select or better grade, unselected for color and grain, surfaced four sides, square-edged, and straight. Basswood may be used where fire-retardant materials are required.
4. Plywood for transparent finish shall conform to U.S. Product Standard PS-51-71, Type I (fully waterproofed bond), with architectural grade face veneers of species as specified, free of all pin knots, patches, color streaks and spots, sapwood, and other defects. Plywood designated to have plywood cores shall be of either 5 or 7 ply construction. Plywood so designated on the drawings and plywood not otherwise shown shall have a particle board core, cross banding of veneers, and face and back veneers. Particle board cores shall have a 45 pound density, except where the fire retardant treatment requires cores of lesser density.
5. Face veneers shall be matched for color and grain to produce balance and continuity of character. Mineral streaks and other discolorations, worm holes, ruptured grain, loose texture, doze, or shake will not be permitted. Face veneer leaves on each surface shall be full-length, book-matched, center-matched, and sequence-matched. Surfaces shall be sequence and blueprint matched. Veneers not otherwise indicated shall be plain sliced. Backing veneers for concealed surfaces shall be of a species and thickness to balance the pull of the face veneers.
6. Hardwood plywood for painted surfaces shall conform to U.S. Product Standard PS-51-71, Type I, and shall have sound birch, maple or other approved close grain hardwood faces suitable for a paint finish.
7. Perforated hardboard shall be a tempered hardboard, 1/4" thick, conforming to Federal Specification LLL-B-810B, Type I, SIS, Finish B (primed), Design B (perforated), with 1/4" diameter hole spaced on 1" centers both ways.
8. Plywood for laminate assemblies shown or specified with plywood core shall be of the 5 or 7 ply construction with sanded close-grain hardwood face and back veneers, laminated with waterproof glue, in thickness shown, conforming to U.S. Product Standard PS-51-71.
9. Particle board for plastic laminate assemblies shown or specified with particle board wood core shall conform to U.S. Product Standard CS-236-66, Type 1, or 2, Grade B (45 pound density), class 2: except where fire-retardant treatment is required the density shall conform to the treatment requirements.

Q. Plastic Laminate:

1. Plastic laminate surfaces shall be laminated with thermosetting decorative sheets of the color, pattern, and style as selected by the Architect.
   a. Horizontal surfaces shall be laminated with sheets conforming to Federal Specification L-P-508F, Style D, Type I (general purpose), Grade HP, Class 1, 1/16" thick, satin finish, with rough sanded backs.
   b. Vertical surfaces shall be laminated with sheets conforming to Federal Specification L-P-598F, Style D, Type II, (vertical Surface), Grade HP, Class 1, non-forming, satin finish, 1/32" thick or heavier.
   c. Curved surfaces shall be laminated from sheets conforming to Federal Specification L-P-508F, Style D, Type III (post-forming), Grade HP, Class 1, satin finish.

NOT FOR BIDDING

d. Balance sheets for backs in concealed locations shall be either reject material of the same type and thickness as the general purpose grade facing or may be .020" thick laminate backing sheets conforming to Federal Specification L-P-00508E, Style ND, Type V (backing sheet), Grade HP.

2. Adhesives:
   a. For application of plastic laminate to wood substrates of horizontal surfaces shall be a phenolic, resorcinol, or melamine adhesive conforming to Federal Specification MMM-A-181C, producing a waterproof bond.
   b. For applying plastic laminate to vertical surfaces shall be either a waterproof type or a water-resistant type such as a modified urea-formaldehyde resin liquid glue conforming to Federal Specification MMM-A-188C.
   c. Contact adhesive will not be acceptable.

R. Solid Surfacing:
1. Homogeneous solid sheets of filled polyester and acrylic resin complying with material and performance requirements of ANSI Z124.3, for Type 5 or Type 6, without a pre-coated finish.
2. Install as directed by manufacturer of specified material for commercial foodservice use for the areas and with the units specified and shown.
a. Especially isolate heated drop-in units per solid surfacing manufacturer's direction. This includes any blocking, insulation, reflective tape, additional layers of material, s/s collar, etc.
3. Structural support for ½" thick countertop must not allow more than 6" void in any direction; for 3/4" an 8" void is maximum.
4. Provide additional support around all drop-in and countertop mounted equipment to preclude future deflection of material, especially at heated units.
5. Countertop edges must be built up to 1-1/2" with same material (or as specified). Unsupported overhanging edges must not exceed 2".
6. Typical manufacturers:
   a. DuPont "Corian".
   b. Formica "Surell".
   c. Wilsonart "Gibraltar".

2.03 FABRICATION AND MANUFACTURE

A. Materials and Workmanship:
1. Unless otherwise specified or shown on drawings, all materials shall be new, of best quality, perfect, and without flaws. Material shall be delivered and maintained on the job in an undamaged condition.
2. Fabrication shall be equal to the standards of manufacture used by all first class equipment manufacturers, performed by qualified, efficient, and skilled mechanics of the trades involved.
3. All items of standard equipment shall be the latest model at time of delivery.
4. All fabricated work shall be the product of one manufacturer of uniform design and finish.
5. Each fabricated item of equipment shall include all necessary reinforcing, bracing, and welding with the proper number and spacing of uprights and cross members for strength.
6. Wherever standard sheet sizes will permit, the tops of all tables, shelves, exterior panels of cabinet type fixtures, and all doors and drainboards shall be constructed of a single sheet of metal.
7. Except where required to be removable, all flat surfaces shall be secured to vertical and horizontal bracing members by welding or other approved means to eliminate all buckle, warp, rattle, and wobble. All equipment not braced in a rigid manner and which is subject to rattle and wobble shall be unacceptable, and the K.E.C. shall add additional bracing in

NOT FOR BIDDING

an approved manner to achieve acceptance.

B. Sanitary Construction:
   1. All fabricated equipment shall be constructed in strict compliance with the standards of the National Sanitation Foundation as outlined in their Bulletin on Food Service Equipment entitled "Standard No. 2" dated October 1952, and in compliance with the local and State Public Health Regulations in which the installation will occur.
   2. All fabricated equipment shall bear the N.S.F. "Seal of Approval".

C. Construction Methods:
   1. Welding:
      a. All welding shall be the heliarc method with welding rod of the same composition as the sheets or parts welded. Welds shall be complete, strong, and flush with excess metal ground off and joints finished smooth to match adjoining surfaces; free of mechanical imperfections such as gas holes, pits, cracks, etc., and shall be continuously welded so that the fixtures shall appear as one-piece construction. Butt welds made by spot solder and finished by grinding shall not be acceptable.
      b. Spot welds shall have a maximum spacing of 3". Tack welds shall be of at least 1/4" length, and spaced no greater than 4" from center to center. Weld spacing at the ends of the channel battens shall not exceed 2" centers.
      c. In no case shall soldering be considered as a replacement for welding, nor shall any soldering operation be done where dependence is placed on stability and strength of the joint.
      d. Fixtures shall be shop fabricated of one piece and shipped to the job completely assembled wherever possible. Equipment too large to transport or enter the building in one piece shall be constructed so that the field joints can be welded at the job site.
      e. All exposed joints shall be ground flush with adjoining material and finished to harmonize therewith. Wherever material has been sunk or depressed by welding operation, depression shall be suitably hammered and peened flush with the adjoining surface and ground to eliminate low spots. In all cases the grain of rough grinding shall be removed by successive fine polishing operations.
      f. All unexposed welded joints on undershelves of tables or counters of stainless steel shall be suitably coated at the factory with an approved metallic-based paint.
      g. After galvanized steel members have been welded, all welds and areas where galvanizing has been damaged shall have a zinc dust coating applied in conformance with Military Specification Number MIL-P-26915.
   2. Joints:
      Butt joints and contact joints, wherever they occur, shall be close fitting and shall not require a filler. Wherever break bends occur, they shall be free of undue extrudence and shall not be flaky, scaly, or cracked in appearance; where such breaks do mar the uniform surface appearance of the material, all such marks shall be removed by suitable grinding, polishing, and finishing. Wherever sheared edges occur, they shall be free of burrs, fins, and irregular projections and shall be finished to obviate all danger of laceration when the hand is drawn over them. In no case shall overlapping materials be acceptable where miters or bullnosed edges occur.
      b. Field welded joints shall be ground smooth without dips and irregularities and finished to match original finish.
   3. Bolt, Screw and Rivet Construction:
      a. All exposed surfaces shall be free from bolt and screw heads. When bolts are required, they shall be of the concealed type and be of similar composition as the metal to which they are applied.
      b. Where bolt or screw threads on the interior of fixtures are visible or may come into

NOT FOR BIDDING

contact with hands or wiping cloths, they shall be capped with a stainless steel or chrome acorn nut and stainless steel lock washer.

c. If rivets are used to fasten rear paneling to the body of the fixture, such rivets shall be stainless steel. In no case shall iron rivets be used.

4. Sound Deadening:
   a. Schnee Butyl-Sealant 1/2" wide rope continuously between all frame members and underside of stainless steel table tops, overshelves and undershelves.
   b. Tighten stud bolts for maximum compression of sealant.
5. Hi-Liting:
   a. All horizontal edges of stainless steel tops, splashes, tops of raised rolled rims and edges of all exposed doors, handles and shelf edges shall be hi-lited in uniform design by grinding with abrasive not coarser than #240 grit, then polishing with compound to a uniform mirror finish.
6. Polishing:
   a. The grain of polishing shall run in the same direction on all horizontal and on all vertical surfaces of each item of fabricated equipment except in the case where the finish of the horizontal sections of each shall terminate in a mitered edge.
   b. Where sinks and adjacent drainboards are equipped with backsplash, the grain of the polishing shall be consistent in direction throughout the length of the backsplash and sink compartment
7. Finishes:
   a. Paint and coatings shall be of an N.S.F. approved type suitable for use in conjunction with foodservice equipment. Such paint or coating shall be durable, non-toxic, non-dusting, non-flaking and mildew resistant, shall comply with all governing regulations, and shall be applied in accordance with the manufacturers recommendations.
   b. All exterior, galvanized parts, exposed members of framework, and wrought steel pipe where specified to be painted shall be cleaned, primed with rust inhibiting primer, de-greased, and finished with two (2) coats of glossy enamel grey hammertone paint, unless otherwise noted.
   c. Where baked enamel finishes are specified, they shall be oven baked on the fixtures for a minimum of 1-1/2 hours at a minimum temperature of 300º Fahrenheit.
   d. Fabricated equipment shall be spray coated with plastic suitable for protecting the equipment during transport and installation. The coating shall be easily removable after the equipment installation is complete at the job site, and final clean-up has begun.

D. Construction:
1. Legs:
   a. All tubular stands for open base tables, sinks, or dishtables shall have legs constructed of 1-5/8" O.D. stainless steel tubing, with 1-1/4" O.D., #16 gauge stainless steel crossbracing running between legs at a point 10" above finished floor.
   b. All joints between legs and crossbracing shall be welded and ground smooth, full 360°F.
   c. The top end of legs shall be closely fitted into fully-enclosed stainless steel conical gussets no less than 3" high, similar to Klein #481-58 or #483-58, or approved equal.
   d. Gussets shall be fully welded to framing reinforcing members, so that, set screw is not visible from front.
   e. Legs without crossrails will not be accepted.
   f. Legs shall be spaced at not more than 5'-6" on centers, unless otherwise specified.
2. Feet:

NOT FOR BIDDING

a. All tubular legs will be swedged for appearance and close fit to United Show Case #BF-158, or approved equal, fully enclosed, stainless steel bullet-shaped foot.
   1.) The foot shall be threaded into a collar and completely welded inside the tubular leg to permit a maximum adjustment of 2" without any thread exposure.
   2.) Threads shall be National Course Series Class 2 fit or better, machined to prevent end play when foot is at maximum adjustment.
   3.) The bullet-shaped foot shall have slightly rounded bottom to protect the floor, and a minimum bearing surface of 3/4" diameter of stainless steel-to-floor contact.
   4.) Bottom of tubular leg shall be finished off smoothly to provide a sanitary fitting and prevent the accumulation of grease or other debris.
b. Cabinet type fixtures shall be mounted on 8" high die-stamped, sanitary, two-piece stainless steel legs no less than 2-3/4" in diameter at the top, Component Hardware #A72-0811, or approved equal.
   1.) The bottom fully enclosed, stainless steel, bullet-shaped foot threads up into the inside of the upper member, with a male threaded 5/8" bushing to permit maximum adjustment of 2" without thread exposure.
   2.) The upper section shall be stamped in a neat design with a flared inverted shoulder and fully welded to a base plate designed for anchoring to the channel underbracing.

3. Table Tops:
   a. Tables shall be constructed of stainless steel and of a thickness not less than #14 gauge with 1-3/4" by 120º rolled edge or as otherwise specified and detailed.
   b. All corners shall be bull-nosed and of the same radius as rolled edges.
   c. Joints where required shall be butt-welded and ground smooth to present a uniform one-piece appearance.
   d. All tops shall be reinforced on the underside with a fully welded framework of 1-1/2"x1-1/2"x1/8" galvanized steel angles with the framing extending around the top perimeter and crossbraced on 24" maximum centers.
   e. 1"x4"x1" galvanized or stainless steel, fully welded, cross channel, closed end members placed at each pair of legs with one (1) channel running lengthwise will also be acceptable.
   f. All tops shall be reinforced so that there will be no noticeable deflection.
   g. Metal tops where adjacent to walls or other items of equipment, shall be constructed with integral, coved, back and/or endsplashes as required and specified in accordance with the standard details contained herein. Close all ends of splashes.

4. Enclosed Bases:
   a. All enclosed bases or cabinet bodies shall be of seamless #18 gauge stainless steel construction, enclosed on the ends and sides as required and called for under each item.
   b. Ends of body shall terminate at front or operator's side in a 2" wide mullion, vertical, and completely enclosed. All intermediate mullions shall be completely enclosed.
   c. The bases shall be reinforced at the top with a framework of 1-1/2"x1-1/2"x1/8" galvanized angles, with all corners mitered and welded solid.
   d. Underside of top shall be reinforced with channels and gussets where necessary. Additional angles and cross members shall be provided to reinforce shelves and support tops under heavy tabletop equipment.
   e. Where sinks or other drop-in equipment occur, provide additional reinforcing extending crosswise, both sides of opening.
   f. In the case of fixtures fitting against or between walls, the bodies shall be set in 1" or 2" from the wall line, with the tops continuing to the wall line with integral, coved

NOT FOR BIDDING

splashes as specified. Extend vertical face of body to the wall line only. This will permit adjustment to wall irregularities. Vertical trim strips will not be accepted.

g. Bodies shall be fitted with counter style stainless steel legs as hereinbefore specified.

5. Drawers:
   a. Drawers, where specified, shall have removable pan inserts of #18 gauge stainless steel, and shall be approximately 20"x20"x5" deep unless otherwise specified.
      1.) Perimeter top edge shall be flanged out 1/2".
      2.) All interior horizontal corners shall be rounded on a 1" radius, and all interior vertical corners shall be rounded on a 2" radius.
   b. Fronts shall be double pan #16 gauge stainless steel construction, 1" thick, insulated with a semi-rigid, fiberglass board, unfaced, having a three-pound density.
      1.) The top of the drawer face shall be formed as an integral pull by breaking the front pan back on a 45º angle 1", then straight up 1", back to front 1", and then down at the front 3/4".
      2.) Drawer front shall have all edges and corners ground smooth with a radius edge pull.
      3.) Provide hard rubber button bumpers attached to rear of drawer face at each corner.
   c. The drawer shall have an all welded frame of 1"x1", #16 gauge stainless steel angles sized to fit the removable pan insert.
   d. Drawers shall operate on #14 gauge full-extension slides with stainless steel roller bearings with hardened and ground race ways, Component Hardware, S52 Series, or approved equal. Slides shall be pitched approximately 3/8" per foot to permit self closing action.
   e. Drawers shall be adequately and neatly fitted to the guides to permit easy operation without rattle or binding.
   f. Slides and frame shall be reinforced to support a dead weight of 150 pounds when drawer is fully extended.
   g. Adjustable stops shall be provided for each drawer at the fully-opened position, and be readily liftable by hand for easy removal of drawer.
   h. All drawers not mounted inside a cabinet body shall be completely enclosed in an #18 gauge stainless steel box-type enclosure and suspended from angle framing under the fixture top. The housing bottom shall be flanged and welded to an #18 gauge stainless steel reinforcing channel extending across the open end.
6. Sliding Doors:
   a. Sliding doors shall be of the double pan type, with the exterior pan constructed of #18 gauge stainless steel with all four sides channeled and corners welded. The interior pan shall be similarly constructed of #20 gauge stainless steel, set into the exterior pan, and welded in place.
   b. All doors shall be insulated with semi-rigid fiberglass board, un-faced, having a three-pound density. Styrofoam shall not be acceptable.
   c. Doors 18" wide or greater, shall have internally welded 4" wide reinforcing channels to prevent warpage.
   d. Each door shall be fitted with a positive flush-type stainless steel pull, Standard-Kiel #1262-1014-1283 recessed handle, or approved equal.
   e. In the back of each door install a 1"x1", #16 gauge stainless steel angle stop welded in a suitable location to prevent the doors from overpassing the flush pulls.
   f. Doors in the closed position shall overlap each other by no more than 2".
   g. Each door shall be fitted with two (2), 1-3/8" ball bearing sheaves fastened to 1"x1/8" stainless steel bar stock welded to the top corners of each door for suspending on an overhead #16 gauge stainless steel channel track. The hangers shall be tapped for

NOT FOR BIDDING

1/4"-20 thumb screw vertical locks which prevent the doors from jumping the track in operation while permitting easy removal for cleaning without tools.

h. Insure that the bottom of the doors are positively and continuously guided to assure proper alignment and passing regardless of the position of each door.

i. Provide hard rubber bumpers for doors to close against to insure quiet operation.

7. Hinged Doors:
   a. Hinged doors shall be of the same materials and construction as sliding doors previously specified.
   b. Hinges shall be heavy duty, stainless steel, removable type, and fastened by tapping into 1/4"x3/4" stainless steel bar stock inside the door pan and behind the door jamb.
   c. The door face shall be flush with the cabinet body when fully closed.
   d. Size widths of doors equally when installed in pairs, or in series with other pairs, with no door being greater than 36" in width.
   e. Doors shall be held closed by permanent magnetic closure devices of an approved type and of sufficient strength to hold the doors shut. Install two (2) per door (minimum), mounted to the door jamb, top and bottom, with opposing chrome-plated steel plates securely fastened to the inner panel of the doors.
8. Undershelves:
   a. All open base tables shall be provided with full-length undershelves of #16 gauge stainless steel fully welded to legs with all joints ground smooth and polished.
   b. Front edge shall turn down 1-1/2" and under 1/2".
   c. Turn up rear and ends 2", with integral coved radius, when specified.
   d. If required by width, provide 1-1/2"x1-1/2"x1/8" galvanized angle bracing mounted to underside, full length.
9. Interior Shelves:
   a. All interior shelves within cabinet bodies, enclosed bases and overhead cabinets, shall be of #16 gauge stainless steel.
   b. Removable shelves shall be constructed in equal sections, and rest in 1-1/2"x1-1/2"x1/8" stainless steel angle frame. Cove all horizontal corners in accordance with N.S.F. requirements.
   c. Stationary shelves shall have 2" turn-up on back and ends, and continuously welded to cabinet body, polished and ground smooth to form a one-piece interior free of any crevices.
   d. Front edge shall turn down 1-1/2" and under 1/2", and finished with "z" bar forming completely enclosed edge for maximum strength and sanitation.
   e. Provide 1-1/2"x1-1/2"x1/8" angle bracing mounted to underside, full length.
10. Elevated Shelves:
   a. Shelves over equipment not adjacent to a wall shall be mounted on 1" diameter #16 gauge stainless steel tubular standards neatly fitted with stainless steel base flanges, unless otherwise specified.
   b. The top of the tubular standards shall be completely welded to #14 gauge stainless steel support channels, full width of overshelf.
   c. Inside the tubular standard, and welded to same, provide 1/2" diameter steel tension rod extended through countertop and securely anchored to lower framework reinforcing with nuts and lock washers in such a manner as to assure a stable, sway-free structure.
   d. If required by width, provide 1-1/2"x1-1/2"x1/8" stainless steel angle bracing mounted to underside, full length.
   e. Cantilevered shelves, when called for, shall be #16 gauge stainless steel supported on #14 gauge stainless steel brackets welded to 1-5/8" O.D. stainless steel tubular standards extending through the backsplash, and fully welded to the table framework.

NOT FOR BIDDING

Provide Klein #481-SH welded sleeves where standards penetrate backsplash.

11. Wall Shelves:
    a. Open wall shelves shall be constructed of #16 gauge stainless steel with back and ends turned up 2", positioned 2" out from face of wall, with all corners welded, and supported on #14 gauge stainless steel brackets.
    b. Brackets shall be flanged inward beneath the shelf and at the wall 1-1/2" with intersecting flanges completely welded, and attached to shelf with studs welded to the underside and bolted with stainless steel lock washers and chrome-plated cap nuts.
    c. Each bracket shall be fastened to the wall with a minimum of two (2) 1/4"-20 stainless steel bolts anchored securely by means of toggles or expansion shields.
12. Sinks:
    a. All sinks shall be the size and shape as shown on drawings, and constructed of #14 gauge stainless steel with backs, bottoms and fronts formed of one continuous sheet and the ends welded in place.
    b. Sinks shall have all corners, both vertical and horizontal, coved on a 3/4" radius electrically welded, ground smooth and polished. Soldered in filleted corners will not be acceptable.
    c. Multiple compartment sinks shall be divided with double wall, #14 gauge stainless steel partitions with a 1/2" radius on top and all corners rounded as other corners, continuously welded, ground smooth and polished.
    d. The bottom of each compartment shall be creased to a die stamped recess, tapered and shaped to receive a lever type waste without the use of solder, rivets, or welding.
    e. Provide #14 gauge stainless steel waste lever angle bracket mounted to underside of compartment at front.
    f. The front and exposed ends of sinks shall be fabricated with a 1-1/2", 180 degree rolled edge. The back and end adjacent to walls or other fixtures shall be turned up with integral coved edge 2" high and returned 2-1/2" at the top on a 45º angle. Cap ends of all exposed splashes.
    g. Unless otherwise specified, two (2) faucet holes on 8" centers shall be provided, located over the centerline of partitions between compartments, 2-1/2" down from splash break.
    h. Gussets for legs shall be fully welded all around to #12 gauge stainless steel triangular plates fully welded to underside of sink.
    i. Sinks fabricated into working surfaces shall be constructed of the same material and in like manner to sinks specified above, except rolled edge and backsplash shall be omitted and the bowl shall be completely welded integral and flush with the working surface. Where basket type wastes are called for, they shall be fitted with removable seats.
    j. Where sink bowls are exposed, the exterior shall also be polished to a #4 finish.
13. Sink Drainboards:
    a. Drainboards shall be constructed of the same material as the sinks and shall be welded integral to same.
    b. The front portion of drainboards shall continue the 1-1/2", 180º rolled edge of sink bowls on a continuous and level horizontal plane.
    c. The surface of the drainboard shall pitch from 2-1/2" at the end furthest from the sink, to 3" at the bowl; or 1/8" per foot. In addition, the bottom surface shall be dished toward the center for complete drainage.
    d. The backsplash of the drainboard shall match the rear of the sink contour and shall be welded integral thereto, running parallel to the floor.
    e. Drainboards shall be reinforced on the underside with a framework of 1"x4"x1" stainless steel channel underbracing placed at each pair of legs, with exposed ends

NOT FOR BIDDING

capped, and one (1) channel running lengthwise.

f. Where disposer cones are fabricated into drainboards, additional 1"x4"x1" stainless steel channels shall be welded into the top framing, spanning the drainboard from front-to-back on both sides of the cone and located not more than 3" to either side.

g. Disposer control panels or switches shall be supported beneath drainboards, when specified, by means of a #12 gauge stainless steel mounting bracket.

14. Dishtable Tops:

a. Dishtables shall be constructed of #14 gauge stainless steel with all corners, both vertical and horizontal, coved on a 3/4" radius electrically welded, ground smooth and polished. Solder in filleted corners will not be acceptable.

b. Fronts and exposed ends shall be fabricated with a 3" high, 1-1/2" 180° rolled edge with rounded corners. The back and ends adjacent to walls or other fixtures shall be turned up with integral coved edge 12" high and returned 2-1/2" at the top on a 45º angle. Cap ends of all exposed splashes.

c. All tops shall slope 1/8" per foot (minimum).

d. Dishtables shall be reinforced on the underside with a framework of 1"x4"x1" stainless steel channel underbracing placed at each pair of legs, with exposed ends capped, and one (1) channel running lengthwise fully welded between front-to-back channels.

e. Where tops fit into dishmachines, they shall turn down and into, forming a sealed watertight fit, and attached according to dishmachine manufacturers instructions.

f. On each side of dishmachine, tables shall be provided with integral splash shields as part of the backsplash.

g. Silicon filling of gaps caused by poor fit will not be acceptable.

h. On corner-type door machines, provide #14 gauge stainless steel wall-mounted, splash panel to protect adjacent wall, full width of door opening.

15. Cafeteria Style Counters:

a. All counters shall be constructed as previously specified under Enclosed Bases.

b. Provide top and bottom framing for each counter food pan, cold pan, coffee urn, ice cream unit, ice bin, dish dispenser, etc., whether a drop-in unit or a cutout for a portable unit.

c. Where plate shelves occur, frame horizontally 8-1/2" back from counter edge or as design dictates, and at bottom of shelf at counteredge.

d. The countertop shall be constructed of #14 gauge stainless steel, as previously specified, with all joints welded, ground and polished.

e. Fronts and exposed ends shall be stainless steel, plastic laminate or other material as noted in the Item Specifications.

f. All display glass shelving shall be 1/4" polished plate glass and fully trimmed with #18 gauge stainless steel formed channels. Top shelves shall be the same width as the shelf below. Shelves shall be supported on 5/8" square, #16 gauge stainless steel perimeter tubing fully welded to 1-1/4" square, #16 gauge stainless steel tubing uprights.

g. Provide appropriate adjustable glass sneeze or breath guards trimmed in stainless steel along front, entire length, mounted in Klein 4465-A brackets.

h. Protector shelf over hot food wells shall be #16 gauge stainless steel supported on 1-1/4" square, #16 gauge stainless steel tubing uprights, with 1/4" polished plate glass front and end panels trimmed in #18 gauge stainless steel channels. When specified for self-service, mount bottom edge of front panel 8" above countertop.

i. All display and protector shelves shall be furnished with full-length fluorescent lights wired to on/off switch in counter apron, with lamps and protective shields. Conceal all wiring in tubular uprights.

NOT FOR BIDDING

j. Refer to Item Specification for changes, as required.
k. Counter shall be internally wired complete by the K.E.C., and in such a way as to meet the requirements of the Electrical Code of the job location.

2.04 EQUIPMENT

A. All items listed on the Contract Documents under the heading "Equipment Schedule" shall be furnished in strict accordance with the foregoing specifications and with the following detailed Itemized Specifications.

B. Manufacturer's names and model numbers are shown establishing quality, size, and finish required, representing the Owner's and Consultant's requirements and basis for bid. Equipment is listed hereinafter with same item numbers as shown on Contract Documents.

**PART 3 EXECUTION**

3.01 INSPECTION

A. Before beginning the installation of foodservice equipment, the spaces and existing conditions shall be examined by the K.E.C. and any deficiencies, discrepancies, or unsatisfactory conditions for proper installation of foodservice equipment shall be reported to the Architect in writing.
1. Do not proceed with installation until unsatisfactory conditions have been corrected in a manner satisfactory to the installer.
2. Beginning installation shall constitute acceptance of the area.

3.02 PREPARATION

A. Foodservice equipment drawings are diagrammatic and intended to show layout, arrangement, mechanical and electrical requirements.

B. Field verify all measurements at the building prior to fabrication of custom equipment. Coordinate measurements and dimensions with rough-in and space requirements.

3.03 INSTALLATION

A. The K.E.C. shall coordinate his delivery schedule with the Contractor to ensure adequate openings in the building to receive the equipment.

B. Equipment shall be unpacked, fully assembled and set level in position for final connections. Parts shipped loose but required for connection shall be properly tagged and shall be accompanied by the necessary installation instructions.

C. Provide a competent, experienced foreman to supervise installation and final connections with other trades.

D. Remote Refrigeration Systems:
1. All refrigeration work where applicable to this contract shall be accomplished in an approved manner, using finest quality fittings, controls, valves, etc.
2. Refrigeration items shall be started up, tested, adjusted, and turned over to the Owner in first class condition and left running in accordance with the manufacturer's instructions.
3. Refrigeration lines and hook-ups shall be completed by the K.E.C. with the exception of electric, water, and drain line final connections unless otherwise specified.
4. All copper tubing shall be refrigerant grade A.C.R. or type "L".
5. Silver solder and/or Sil-Fos shall be used for all refrigerant piping. Soft solder is not acceptable.
6. All refrigerant lines in pipe sleeves or conduit shall be effectively caulked at ends to prevent entrance of water or vermin and at penetrations through walls or floors.
7. All tubing shall be securely anchored with clamps, and suspended lines shall be supported with adjustable hangers at 6'-0" o.c. maximum.

NOT FOR BIDDING

8. Wrap drain line in freezer compartment(s) with approved heat-tape for final connection by Electrical Contractor.

E. Sealing and Caulking:
1. Prior to the application of sealant, all surfaces shall be thoroughly cleaned and de-greased.
2. Apply around each unit of permanent installation at all intersections with walls, floors, curbs or other permanent items of equipment.
3. Joints shall be air-tight, water-tight, vermin-proof, and sanitary for cleaning purposes.
4. In general, joints shall be not less than 1/8" wide, with backer rod to shape sealant bead properly at 1/4" depth. Shape exposed surfaces of sealant slightly concave, with edges flush with faces of materials at joint.
5. At internal corner joints, apply sealant or gaskets to form a sanitary cove, of not less than 3/8" radius.
6. Provide sealant-filled joints up to 3/4" in joint width. Trim strips for wider joints shall be set in a bed of sealant and attached with stainless steel fasteners, 4" o.c. or less, to insure suitable fastening and prevent buckling of the metals fastened.

F. Cutting:
1. All cutting, fitting, or patching required during installation shall be accomplished by the K.E.C., at his own expense, so as to make the work conform to the plans and specifications.
2. The K.E.C. shall not cut or otherwise alter, except with the consent of the Owner, the work of any other Contractor.
3. Provide cut-outs in foodservice equipment where required to run plumbing, electric, or steam lines through equipment items for final connections.

3.04 FIELD QUALITY CONTROL

A. Inspection:
1. Provide access to shop fabrication areas during normal working hours to facilitate inspection of the equipment during construction, by the Architect or his authorized representative.
2. Errors found during these inspections shall be corrected to the extent required within the scope of the plans, specifications, and approved drawings.

B. Start-Up and Testing:
1. Delay start-up of foodservice equipment until service lines have been tested, balanced, and adjusted for pressure, voltage, and similar considerations; and until water and steam lines have been cleaned and treated for sanitation.
2. Before testing, lubricate each equipment item in accordance with manufacturer's recommendations.
3. Supply a trained person or persons who shall start up all equipment, test and make adjustments as necessary, resulting in each item of equipment, including controls and safety devices, performing in accordance with the manufacturer's specifications.
4. All gas-fired equipment shall be checked by the local gas company as to calibration, air adjustments, etc., and adjustments made as required.
5. Repair or replace any equipment found to be defective in its operation, including items which are below capacity or operating with excessive noise or vibration.

C. Demonstration:
1. Provide an operating demonstration of all equipment at a time of Owner's convenience, to be held in the presence of authorized representatives of the Architect and Owner.
2. Provide a follow-up kitchen demonstration three (3) months after the initial demonstration or kitchen opening. K.E.C. to coordinate scheduling with manufacturer’s representatives.
3. Demonstration shall be performed by manufacturer's representative knowledgeable in all

NOT FOR BIDDING

aspects of his equipment.

4. During the demonstration, instruct the Owner's operating personnel in the proper operation and maintenance of the equipment.
5. Furnish complete, bound, operation/maintenance manuals and certificates of warranty for all items of equipment provided, in accordance with Article 1.5 Submittals, Paragraph F, at this demonstration time.

3.05 ADJUST AND CLEAN

A. Upon completion of installation and tests, clean and sanitize foodservice equipment and leave in condition ready for use in food service.

B. Remove all protective coverings, and thoroughly clean equipment both internally and externally with stainless steel cleaner.

C. Make and check final adjustments required for proper operation of the equipment.

D. Restore finishes marred during installation to remove abrasions, dents and other damages. Polish stainless steel surfaces, and touch-up painted surfaces with original paint.

E. Clean up all refuse, rubbish, scrap materials, and debris caused by the work of this Section, and put the site in a neat, orderly, and broom-clean condition.

3.06 ITEMIZED EQUIPMENT

**ITEM #1: UTILITY CART, MOBILE**

QUANTITY: Two (2)
MANUFACTURER: Lakeside Manufacturing Company
MODEL NO.: 544 (N058)
PERTINENT DATA: 700-Lb. Capacity, Three Shelf, N.S.F. Model
UTILITIES REQ'D: ----
ALTERNATE MFRS.: Steril-Sil; Paper Products

Furnish and set-in-place per Equipment Plan, Sheets K-101; Manufacturer's Instructions and the following:

1. All four (4) casters swivel-type.

**ITEM #2: SHELVING, MOBILE**

QUANTITY: One (1)
MANUFACTURER: InterMetro Industries Corporation
MODEL NO.: MetroMaxQ (N058)
PERTINENT DATA: Five-Tier High, Free-Standing, Polymer
UTILITIES REQ'D: ----
ALTERNATE MFRS.: Eagle Group

Furnish and set-in-place per Equipment Plan, Sheet K-101; Manufacturer's Instructions and the following:

<u>Bread Room</u>:

1. One (1) #MQ2448G section; 24" W x 48" L x 5-tier high.

NOT FOR BIDDING

**ITEM #2: (Continued)**

2. Four (4) #MQ74UPE posts for stem casters, 73-3/16" high.

3. Two (2) #5MPX polyurethane swivel casters with bumpers.

4. Two (2) #5MPBX polyurethane swivel casters with brakes and bumpers.

5. Plastic wedge lock connectors, quantity as required.

6. Locate bottom shelf @ 12" A.F.F.; space remaining shelves equally.

**ITEM #3: WALK-IN COOLER/FREEZER**

QUANTITY: One (1)
MANUFACTURER: Thermo-Kool
MODEL NO.: Indoor Installation (N058)
PERTINENT DATA: 4" Thick Durathane Construction - Class I; NSF Construction
UTILITIES REQ'D: 1750W, 120V, 1PH; (2) 3/4" IW
ALTERNATE MFRS.: Kolpak; ThermalRite; Bally

Furnish and set-in-place per Equipment Plan, Sheet K-101; Building Conditions Plan, Sheet K-102; Manufacturer's Shop Drawing and the following:

1. Two Section Unit: 29'-9 1/2" L x 12'-6 1/4" W x 8'-6" H. Interior width: Cooler – 12'-8 1/4", Freezer – 16'-1 1/4".

2. Exterior Finish:
   -- 26 GA stucco embossed galvanized steel where unexposed.
   -- 20 GA stucco embossed stainless steel where exposed.

3. Interior Finish:
   -- White acrylic enamel baked-on .040 stucco embossed aluminum walls.
   -- White acrylic enamel baked on 26 GA smooth galvanized steel ceiling.

4. Interior Floor:
   -- 4" prefabricated floor panels installed in 6" deep floor recess over hot asphalt paper or 6 MIL polyethylene sheets on building floor slab per Detail, Sheet K-102.
   -- 2" setting bed with two (2) layers of wire reinforcing mesh fabric and quarry tile floor material with 6" high integral coved base, both interior and exterior of box, installed over prefabricated floor panel by Flooring Contractor.

5. Entrance Door:
   -- Two (2) flush-mounted, self-closing, right-hand hinged doors, with 34" x 76" net opening.
   -- Polished chrome camlift hinges with lift-off capability. One (1) extra hinge per door, three (3) total.
   -- Kason #1236 polished chrome lever-action handle with knob-turn release and cylinder lock.
   -- Kason #09440004 polished chrome mortise dead-bolt lock, factory mounted.
   -- Hydraulic door closer.
   -- Standard 2" diameter dial indicating thermometer factory mounted, each compartment.

NOT FOR BIDDING

**ITEM #3: (Continued)**

- -- 36" high aluminum diamond tread kickplates, interior and exterior of door, frame and jamb.
- -- 14" x 24" heated observation windows, both compartments.
- -- Undercut doors for quarry tile floor.
- -- Foot treadle door opener.
- -- Kason #1806 LED light fixture with high-impact plastic cover centered over door opening to avoid conflict with shelving, each compartment. Extend wiring in conduit, foamed within door panel header, to junction box mounted on top of walk-in ceiling, each compartment.
- -- Kason #907 interior door handle, factory mounted, with concealed metal backing plate.
- -- Round vinyl door bumper mounted to front exterior face to protect handle from puncturing wall when door in full open position.
- -- Engraved phenolic plastic compartment sign - 12" long x 2" high; white in color with 1" high blue CAPITAL letters mounted on each door above observation window; (1) - COOLER, (1) - FREEZER.
- -- 12-gauge heavy-duty stainless steel heated threshold, each compartment.

6. Heated pressure relief port in freezer, ceiling mounted.

7. Five (5) Kason #1810L21248LB 48" long LED light fixtures with shatter-proof high impact plastic covers centrally-mounted to walk-in ceiling per Detail Sheet K-104; two (2) for the cooler, three (3) for the freezer. Fixtures to be shipped loose and mounted by K.E.C. Final connection by Electrical Contractor. K.E.C. to seal and insulate with silicone sealant all knock-outs in fixture casing to prevent moisture infiltration.

8. One (1) #TK4700 walk-in monitor system with #TK4 light control and panic button factory mounted in each door panel and interwired with building monitoring system, as required by Electrical Contractor. Provide engraved identification label mounted above each alarm.

9. Provide and install trim strips of matching exterior finish between ends of walk-in panels and building walls from finish floor to 6" above finish ceiling; verify finished ceiling height.

10. Provide and install closure panels of matching exterior finish between top of walk-in and finish ceiling per Detail Sheet K-102; K.E.C. to verify finished ceiling height.

11. All electrical conduit shall be run concealed above walk-in ceiling, per Detail Sheet K-104.

12. Evaporator coil drain lines shall be run to floor drain with "P"-trap on exterior of box by K.E.C. Pitch drain lines 1" per foot of horizontal run.

13. Black flexible "Armaflex" insulation applied to exposed drain lines and fittings within interior of box by K.E.C.

14. Spiral heat tape applied to drain line within interior of freezer compartment prior to application of insulation by K.E.C. Drain line heating cable shall be installed for continuous 24-hour operation.

15. Coordinate location of sprinkler head drops and provide penetrations, where necessary.

16. Seal and insulate all openings to prevent infiltration of warm air into cooler/freezer compartments.

NOT FOR BIDDING

**ITEM #3: (Continued)**

17. Accessories:
    - -- One (1) Kolpak #HAR-C2-N1 air shield mounted vertically on the hinge side of doorjamb inside each walk-in compartment. Electrical Contractor to provide power receptacle and final connection.
    - -- #16 ga. stainless steel hat-channel bumper rail with closed ends installed to front face of walk-in, full-length, mounted @ 36" A.F.F. Provide 1/8" diamond tread kickplate from top of finish floor coved base to bottom of bumper rail. Align bumper rail with 36" high aluminum kickplate on doors.
    - -- 6" high 1/8" thick aluminum cove baseboard, to be installed where panels are exposed at kitchen side, fastened with countersink screws and seal with gray-color silicone sealant to finish floor and walk-in panels.

18. Quality Inspection Requirement:
    - -- Walk-In shall be completely erected at the manufacturer's facility prior to shipment and a quality control inspection performed on the assembled structure. A digital photograph of factory assembled walk-in shall be provided for the K.E.C. permanent records and included in the operation and maintenance manuals.

**ITEM #4: COOLER REFRIGERATION SYSTEM**

| | |
|---|---|
| QUANTITY: | One (1) |
| MANUFACTURER: | ColdZone |
| MODEL NO.: | CFO150E4S-E (No. 58) |
| PERTINENT DATA: | Uni-Pak, Air Cooled, Outdoor Installation, , Remote, With EcoNet® Intelligent Control |
| UTILITIES REQ'D: | 10.3A, 208V, 3PH |
| ALTERNATE MFRS.: | RDT; Omni Temp; Bally |

Furnish and install per Equipment Plan, Sheet K-101; Manufacturer's Shop Drawing and the following:

1. Condensing Unit: Factory Pre-Assembled, Scroll, Medium Temperature, R-448A.

2. System located outdoors on roof. Curb with pitch-pocket furnished and installed by General Contractor. See roof plan for exact location.

3. Complete winterization package and condensing unit weatherproof cover.

4. Overall size: 28.25" L x 40" W x 19" H.

5. Weight: 205 lbs.

6. Evaporator Coil with High-Efficiency EC Motors: Low-Profile, End-Mount Type, Model CL6A117SDARE; 1.6A, 120V, 1PH
    - -- System to operate at +35°F.
    - -- Furnished complete with thermostat, solenoid and expansion valves factory mounted ready for final connection by Refrigeration Contractor.
    - -- EcoNet® Intelligent Control with remote monitoring and diagnostics.
    - -- Furnish Cat5 cable and interwire to building monitoring system by Electrical Contractor.

NOT FOR BIDDING

**ITEM #4: (Continued)**

7. Complete refrigeration system warrantee: five (5) years for the compressor, Two (2) years for the condensing unit, and Two (2) years for all parts of the evaporator coil.

8. Factory installed main-fused disconnect switch.

**ITEM #5: FREEZER REFRIGERATION SYSTEM**

| | |
|---|---|
| QUANTITY: | One (1) |
| MANUFACTURER: | ColdZone |
| MODEL NO.: | CFO500L4S-E (N058) |
| PERTINENT DATA: | Uni-Pak, Air Cooled, Outdoor Installation, Remote, With EcoNet® Intelligent Control |
| UTILITIES REQ'D: | 20.1A, 208V, 3PH |
| ALTERNATE MFRS.: | RDT; OmniTemp; Bally |

Furnish and install per Equipment Plan, Sheet K-101; Manufacturer's Shop Drawing and the following:

1. Condensing Unit: Factory Pre-Assembled, Scroll, Low Temperature, R-448A.

2. System located outdoors on roof. Curb with pitch-pocket furnished and installed by General Contractor. See roof plan for exact location.

3. Complete winterization package and condensing unit weatherproof cover.

4. Overall size: 33" L x 44" W x 35" H.

5. Weight: 352 lbs.

6. Evaporator Coil with High-Efficiency EC Motors: Low-Profile, End-Mount Type, Model CL6E142DDARE; 1.5A, 208V, 1PH (Fan); 14.3A, 208V, 1PH (Defrost Heater)
   -- System to operate at -10°F.
   -- Furnished complete with thermostat, solenoid and expansion valves factory mounted ready for final connection by Refrigeration Contractor.
   -- EcoNet® Intelligent Control with remote monitoring and diagnostics.
   -- Furnish Cat5 cable and interwire to building monitoring system by Electrical Contractor.

7. Complete refrigeration system warrantee: five (5) years for the compressor, Two (2) years for the condensing unit, and Two (2) years for all parts of the evaporator coil.

8. Factory installed main-fused disconnect switch.

NOT FOR BIDDING

**ITEM #6: DUNNAGE RACK, MOBILE**

QUANTITY: Two (2)
MANUFACTURER: InterMetro Industries Corporation
MODEL NO.: MetroMax i (N058)
PERTINENT DATA: Open-Grid Shelf Mat, Heavy-Duty, Metroseal 3™ Epoxy-Coated
UTILITIES REQ'D: ----
ALTERNATE MFRS.: Eagle Group

Furnish and set-in-place per Equipment Plan, Sheet K-101; Manufacturer's Instructions and the following:

Cooler:

1. One (1) #MHP55K3 unit; 24" W x 48" L.

Freezer:

1. One (1) #MHP55K3 unit; 24" W x 48" L.

**ITEM #7: SHELVING, MOBILE**

QUANTITY: Seventeen (17)
MANUFACTURER: InterMetro Industries Corporation
MODEL NO.: MetroMax i (N058)
PERTINENT DATA: Four-Tier High, Open-Grid Shelf Mat, Polymer
UTILITIES REQ'D: ----
ALTERNATE MFRS.: Eagle Group

Furnish and set-in-place per Equipment Plan, Sheet K-101; Manufacturer's Instructions and the following:

Cooler:

1. Four (4) #MX2442G sections; 24" W x 42" L x 4-tier high.

2. Three (3) #MX2454G sections; 24" W x 54" L x 4-tier high.

3. Twenty-eight (28) #MX63UP polymer posts for stem casters, 61-3/16" high.

4. Fourteen (14) #5MPX polyurethane swivel casters with bumpers.

5. Fourteen (14) #5MPBX polyurethane swivel casters with brakes and bumpers.

6. Plastic wedge lock connectors, quantity as required.

7. Locate bottom shelf @ 12" A.F.F.; space remaining shelves equally.

Freezer:

1. Eight (8) #MX2442G sections; 24" W x 42" L x 4-tier high.

NOT FOR BIDDING

**ITEM #7: (Continued)**

2. Two (2) #MX2448G sections; 24" W x 48" L x 4-tier high.

3. Forty (40) #MX63UP polymer posts for stem casters, 61-3/16" high.

4. Twenty (20) #5MPX polyurethane swivel casters with bumpers.

5. Twenty (20) #5MPBX polyurethane swivel casters with brakes and bumpers.

6. Plastic wedge lock connectors, quantity as required.

7. Locate bottom shelf @ 12" A.F.F.; space remaining shelves equally.

**ITEM #8: DUNNAGE RACK, MOBILE**

QUANTITY: One (1)
MANUFACTURER: InterMetro Industries Corporation
MODEL NO.: MetroMax i (N058)
PERTINENT DATA: Open-Grid Shelf Mat, Heavy-Duty, Metroseal 3™ Epoxy-Coated
UTILITIES REQ'D: ----
ALTERNATE MFRS.: Eagle Group

Furnish and set-in-place per Equipment Plan, Sheet K-101; Manufacturer's Instructions and the following:

Dry Storage:

1. One (1) #MHP55K3 unit; 24" W x 48" L.

**ITEM #9: SHELVING, MOBILE**

QUANTITY: Twelve (12)
MANUFACTURER: InterMetro Industries Corporation
MODEL NO.: MetroMaxQ (N058)
PERTINENT DATA: Five-Tier High, Free-Standing, Polymer
UTILITIES REQ'D: ----
ALTERNATE MFRS.: Eagle Group

Furnish and set-in-place per Equipment Plan, Sheet K-101; Manufacturer's Instructions and the following:

Dry Storage:

1. One (1) #MQ2442G section; 24" W x 42" L x 5-tier high.

2. Eleven (11) #MQ2448G sections; 24" W x 48" L x 5-tier high.

3. Forty-eight (48) #MQ74UPE posts for stem casters, 73-3/16" high.

NOT FOR BIDDING

**ITEM #9: (Continued)**

4. Twenty-four (24) #5MPX polyurethane swivel casters with bumpers.

5. Twenty-four (24) #5MPBX polyurethane swivel casters with brakes and bumpers.

6. Plastic wedge lock connectors, quantity as required.

7. Locate bottom shelf @ 12" A.F.F.; space remaining shelves equally.

**ITEM #10: HAND SINK**

QUANTITY: Four (4)
MANUFACTURER: Eagle Foodservice Equipment Company
MODEL NO.: HSA-10-FAW-LRS (N058)
PERTINENT DATA: Wall Mounted, Wrist Action Faucet
UTILITIES REQ'D: 1/2" HW, 1/2" CW, 1-1/2" W
ALTERNATE MFRS.: Advance/Tabco

Furnish and set-in-place per Equipment Plan, Sheet K-101; Manufacturer's Instructions and the following:

1. Complete sink assembly consisting of: gooseneck faucet, p-trap, tailpiece and basket drain.

2. Accessories:
   -- #606215 skirt assembly, each unit.
   -- Integral right and left stainless steel splash shield, each unit.

**ITEM #11: SOAP & TOWEL DISPENSER -- (N.I.K.E.C. – SPECIFIED BY ARCHITECT)**

QUANTITY: Four (4)

**ITEM #12: PREP SINK**

QUANTITY: One (1)
MANUFACTURER: Custom Fabricated
MODEL NO: #14 GA Stainless Steel
PERTINENT DATA: 7'-3" Long x 2'-6" Wide x 2'-10" High
UTILITIES REQ'D: 1/2" HW, 1/2" CW, (2) 1-1/2" IW
ALTERNATE MFRS.: Eagle, Pro-Stainless, CSI; Keystone

Fabricate and set-in-place per Equipment Plan, Sheet K-101; Fabrication Detail, Sheet K-501A; and the following:

1. Front and left end edge rolls per Detail 1.02B.

2. 13" high back and right end splash per Detail 1.04A.

NOT FOR BIDDING

**ITEM #12: (Continued)**

3. Framework per Detail 1.05.

4. Legs per Detail 1.07.

5. Stainless steel undershelf on both ends per Detail 1.11.

6. Sound-deaden underside of sinks and drainboards with NSF-approved sound dampening material.

7. Accessories:
   -- One (1) T&S #B-0231 backsplash-mounted swing spout faucet with #B-0159-1 aerator.
   -- Two (2) T&S #B-3950-01 twist waste valves with overflow assemblies and #010387-45 basket strainers.

8. Item will remain shrink-wrapped until ready for final connection by Plumbing Contractor. Immediately following completion of final connections, K.E.C. shall re-shrink-wrap tubs or provide removable panel to avoid use by construction trades.

**ITEM #13: UTILITY RACEWAY**

QUANTITY: One (1)
MANUFACTURER: Captive-Aire
MODEL NO.: UDW (N058)
PERTINENT DATA: Wall Mounted
UTILITIES REQ'D: 50.0A, 120/208V, 3PH; 3/4" HW, 1" CW; 2" Natural Gas @ 2,350 MBH
ALTERNATE MFRS.: Avtec; Gaylord, Candy

Furnish and install per Equipment Plan, Sheet K-101; Raceway Detail Drawing, Sheet K-502; Manufacturer's Shop Drawing and the following:

1. All components and labor necessary for a complete system manufactured in accordance with NEC latest edition, NEMA, NFPA No. 54, Uniform Plumbing Code, ASME, OSHA using only U.L. Listed certified components.

2. 25'-0" long x 1'-0" wide x 6'-8" high with risers, completely pre-wired and pre-plumbed to one (1) final connection point for electric, hot water, cold water and gas.

3. System shall extend up to bottom edge of Ventilator, Item #14. All connections shall face down on horizontal member.

4. Risers on each end with 2" penetration into ventilator at 6'-8" A.F.F.

5. 5'-2" overall height less risers with peaked top.

6. Riser, top, endcaps and raceway exterior panels shall be constructed of No. 16 gauge No. 304 stainless steel with a No. 4 mill finish. Removable panels shall be constructed of No. 18 gauge stainless steel.

NOT FOR BIDDING

**ITEM #13: (Continued)**

7. Removable link plates constructed of No. 16 gauge stainless steel.

8. Electrical compartment shall be completely enclosed with stainless steel housing accessible by the removal of link plates. Internal electrical feeder shall be conductor cable wireway having balanced load and phases and with connection lugs for main service. Branch circuit wiring for each electrical connection shall be phase identified and sized in accordance with circuit breaker rated capacity. Raceway shall provide electrical, water and gas service for items #16, #18, #20 and #21.

9. Provide 12" long interchangeable 16 gauge stainless steel link connection plate for each electrical connection equipped with individual circuit breaker(s) installed in breaker panel mounted in left-hand riser, and grounding type receptacle with twist-lock feature or pre-wired flexible sealtite conduit.

10. On each connection plate provide U.L. listed GFIC ground fault interrupter circuits and matching power supply cords on each 120-volt single phase connection.

11. Hot water and cold water plumbing compartment shall be isolated from electrical compartment. All piping and disconnects in system shall be color coded.

12. All hot and cold water piping, including individual branch pipe connection, shall be hard temper type "L" copper tubing with copper sweat type solder fittings. At each individual connection, provide A.G.A approved flexible hose(s) with two-wall brass and stainless steel construction with quick-disconnect fittings.

13. At each individual gas branch connection, provide 1/4-turn ball valve and 48" long Dormont PVC coated AGA and NSF approved flexible hose with SnapFast quick-disconnect device and double SwivelMAX gas connectors.

14. Provide each mobile piece of equipment with an A.G.A. recognized restraining device protecting respective gas disconnect assemblies and connectors.

15. Provide fire/fuel shut-off for electric and gas equipment per NFPA No. 96. System shall require one final connection by Electrical Contractor from fire protection system. Provide manual gas reset station with audio and visual alarms.

16. Electronic gas solenoid valve factory installed at each in-coming gas service ready for final connection per local codes by Plumbing Contractor; inter-wired by Electrical Contractor.

17. Provide matching cord sets for all electric equipment, ten (10) total.

18. Neoprene bumper strips, full-length.

19. System fabricated in four (4) sections, assembled in field to present integral, one-piece, appearance.

20. Provide shunt-type circuit breaker main electrical disconnect mounted in right-hand riser for 50.0A, 120/208V, 3PH service.

21. Factory System Design Verification (SDV) shall be performed after all inspections are complete. SDV report shall be available once completed.

NOT FOR BIDDING

**ITEM #13: (Continued)**

22. Raceway shall be of same manufacturer as Ventilator, Item #14.

23. U.L. listed, solid-state control panel mounted in left-hand riser end, with the following integral accessories:
    -- Ventilator start/stop station with adjustable time-delay to exhaust residual heat.
    -- Ventilator light switch, pre-wired in 10ft. flexible conduit ready for connection to light

24. Accessories;
    -- Three (3) #QTI1+CR Optipure Water Treatment Systems, dual-cartridge, factory-installed and housed within riser. Provide independent pre-piped water lines to service points for Item #21: Combi-Oven. Provide 14" x 18" clear Lexan viewport in front riser panel to monitor pressure gauge and filter bowl.
    -- Watts #LF7R dual check valve for each water drop.
    -- Stainless steel filler panel between UDS risers.

**ITEM #14: VENTILATOR**

| | |
|---|---|
| QUANTITY: | One (1) |
| MANUFACTURER: | Captive-Aire |
| MODEL NO.: | 6630-ND2-PSP-F (N058) |
| PERTINENT DATA: | Wall Mounted, With Fire Protection System |
| UTILITIES REQ'D: | 4,800 CFM Exhaust; 3,800 CFM Supply; 350W, 120V, 1PH (Lights); 20A, 120V, 1PH, 24-Hour Dedicated Service (Fire Protection System) |
| ALTERNATE MFRS.: | Avtec; Gaylord; Caddy |

Furnish and install per Equipment Plan, Sheet K-101; Ventilator Detail Drawing, Sheet K-503; Manufacturer's Shop Drawing and the following:

1. 5'-6" Wide x 24'-0" Long x 2'-6" High, with bottom edge mounted at 6'-8" A.F.F. Length comprised of two (2) 12'-0" long sections. Entire unit constructed of 18 GA - 304 stainless steel #4 mill finish with liquid tight all welded external continuous seams and joints per N.F.P.A. 96, U.L. and State of Delaware Codes.

2. Fourteen (14) U.L. Listed, NSF-Approved, U.L. Listed recessed Allanson round LED light fixtures, seven (7) equally spaced each section, pre-wired to common junction box.

3. Matching stainless steel perimeter closure panels to finished ceiling; K.E.C. to verify ceiling height.

4. Surface fire protection system nozzles and piping to be installed at manufacturer's factory at time of fabrication. All exposed pipe and fittings shall be chrome-plate or stainless steel.

5. Hanger rods and support system from structure above by Contractor. K.E.C. to coordinate method and location with other trades.

6. Stainless steel hanger brackets.

7. Integral 12" wide space at rear of ventilator to accommodate Utility Raceway, Item #13.

NOT FOR BIDDING

**ITEM #14: (Continued)**

8. Stainless steel U.L. Classified 20" captrate solo grease filters with hook.

9. Semi-concealed stainless steel grease trough sloped to removable grease cups.

10. HVAC Contractor to provide tempered supply air during winter months: 60º F - 65º F.

11. Factory System Design Verification (SDV) shall be performed after all inspections are complete. SDV report shall be available once completed.

12. Ventilator shall be of same manufacturer as Utility Raceway, Item #13.

13. Accessories:
    - -- 12" wide utility cabinet mounted on left end with factory pre-piped Ansul R-102 fire suppression system and electrical pre-wire package #SC-31110FP with light and fan switches.
    - -- One (1) Ansul Model K01-2 hand-held fire extinguisher, 1.6 gallon, wall-mounted.
    - -- Six-month and twelve-month inspections, servicing, and replacement of components as per NFPA-96 Latest Edition.

**ITEM #15: SPARE NUMBER**

**ITEM #16: PIZZA OVEN**

QUANTITY: One (1)
MANUFACTURER: Lincoln Foodservice Products, LLC
MODEL NO.: 1180FPG2 (N058)
PERTINENT DATA: Lincoln Impinger II, Conveyorized, Double-Stack, 56" Oven Length
UTILITIES REQ'D: (2)7.0A, 120V, 1PH; (2)3/4" Natural Gas @ 40MBH
ALTERNATE MFR.: Turbo Chef

Furnish and set-in-place per Equipment Plan, Sheet K-101, Manufacturer's Instructions and the following:

1. Double-Stacked package includes the following;
   - -- (2) complete ovens with glass access window, Fastbake finger set-up, take-off shelves and high-stand with casters.

2. Electrical and mechanical services supplied through Utility Raceway, Item #13.

**ITEM #17: SPARE NUMBER**

NOT FOR BIDDING

## ITEM #18: RANGE, MOBILE

QUANTITY: One (1)
MANUFACTURER: Garland/U.S. Range
MODEL NO.: MST4S-E (N058)
PERTINENT DATA: Heavy-Duty Gas Range with Storage Base, (2) Open Burners, Master Series, Electronic Ignition, Flame Failure Protection
UTILITIES REQ'D: 0.1A, 120V, 1PH; 3/4" Natural Gas @ 70MBH
ALTERNATE MFRS.: Southbend

Furnish and set-in-place per Equipment Plan, Sheet K-101; Manufacturer's Instructions and the following:

1. Accessories:
   -- Four (4) heavy-duty 5" diameter polyurethane swivel casters, front two (2) with brakes.
   -- Stainless steel front and both sides.
   -- ¾" rear gas connection. Cap and cover manifold ends.
   -- 17" wide Model #M17LPBG, 10" low-profile backguard.
   -- Pressure regulator.

2. Mechanical and electrical services supplied through Utility Raceway, Item #13.

## ITEM #19: FLOOR TROUGH

QUANTITY: One (1)
MANUFACTURER: IMC Teddy Foodservice Corporation
MODEL NO.: ASFT-2436-SQAS (N058)
PERTINENT DATA: Anti-Spill, 14 GA S/S, Serrated Top, Anti-Slip Grating
UTILITIES REQ'D: 4" W
ALTERNATE MFRS.: Gates; Eagle

Furnish and install per Equipment Plan, Sheet K-101; Manufacturer's Instructions and the following:

1. 3'-0" long x 2'-0" wide, constructed and installed per Detail, Sheet K-102.

2. #SQAS-24 anti-slip serrated stainless steel subway style removable floor grate in equal sections, the less than 30 lbs. and/or 20" long.

3. Bottom of trough pitched to integral stainless steel waste cup with removable perforated stainless steel basket.

4. Top of trough installed flush with top of kitchen finished floor.

5. Unit furnished by K.E.C.; installed by Plumbing Contractor.

NOT FOR BIDDING

## ITEM #20: TILTING KETTLE, 30-GALLON

QUANTITY: One (1)
MANUFACTURER: Crown
MODEL NO.: GLT-30 (N058)
PERTINENT DATA: Floor Mounted, Self-Contained, 2/3-Jacketed
UTILITIES REQ'D: 2.0A, 120V, 1PH; ½" HW, ½" CW, 2" IW; 3/4" Natural Gas @ 100MBH
ALTERNATE MFR.: Cleveland

Furnish and set-in-place per Equipment Plan, Sheet K-101; Manufacturer's Instructions and the following:

1. Accessories:
   - -- One (1) 2" tangent draw-off valve with strainer.
   - -- One (1) kettle brush utensil kit.
   - -- One (1) pan support.
   - -- One (1) food strainer.
   - -- One (1) spring assist hinged cover.
   - -- One (1) contour measuring strip.
   - -- One (1) double pantry faucet with swing spout and bracket.
   - -- One (1) permanent etched interior markings.

2. Electrical and mechanical services supplied through Utility Raceway, Item #13.

## ITEM #21: COMBI OVEN, MOBILE

QUANTITY: Three (3)
MANUFACTURER: Rational Cooking Systems, Inc.
MODEL NO.: SCC WE 62NG/SCC WE 102 NG (N058)
PERTINENT DATA: Combi-Duo, Full Size, Self-Contained, SelfCooking Center® with Care Control
UTILITIES REQ'D: 3.7A, 208V, 1PH; 3/4" CW, 2" IW; 3/4" Natural Gas @ 106 MBH (SCC WE 62NG); 3.9A, 208V, 1PH; 3/4" CW, 2" IW; 3/4" Natural Gas @ 151 MBH (SCC WE 102NG)
ALTERNATE MFR.: None

Furnish and set-in-place per Equipment Plan, Sheet K-101; Manufacturer's Instructions and the following:

1. Accessories: (each unit)
   - -- National Certified Installation (RCI).
   - -- Installation kit.
   - -- Chef Assistance Program.
   - -- One (1) #60.71.933 Combi-Duo stacking kit, mobile.
   - -- Twenty (20) #6019.1150 stainless steel 12" x 20" fry baskets.
   - -- Ten (10) #6010.2101 stainless steel 24" x 20" wire racks.
   - -- Dormont Safety-Set equipment placement system.
   - -- One (1) #QTI1+CR Optipure Water Treatment System, dual-cartridge. Ship to Utility Raceway manufacturer for factory installation.

2. Electrical and mechanical services provided thru Utility Raceway, Item #13.

NOT FOR BIDDING

## ITEM #22: WORKTABLE WITH DROP-IN HAND SINK

QUANTITY: One (1)
MANUFACTURER: Custom Fabricated
MODEL NO.: #14 GA Stainless Steel
PERTINENT DATA: 7'-6" Long x 3'-0" Wide x 3'-0" High
UTILITIES REQ'D: 1/2" HW, 1/2" CW, 1-1/2" W
ALTERNATE MFRS.: Eagle; Pro-Stainless; CSI; Keystone

Fabricate and set-in-place per Equipment Plan, Sheet K-101; Fabrication Detail, Sheet K-501A, and the following:

1. Perimeter edge rolls per Detail 1.02M.

2. Framework per Detail 1.05.

3. Legs per Detail 1.07. Flanged feet on each corner leg.

4. Stainless steel undershelf per Detail 1.11.

5. One (1) stainless steel drawer assembly per Detail 1.14, Type 1 with lock.

6. Worktable per Detail 2.01.

8. Provide cut-out in top for drop-in hand sink.

9. Sound-deaden underside of tabletop and sink with NSF-approved sound dampening material.

10. Accessories:
    -- One (1) Eagle #HWB-T drop-in hand sink with soap and towel dispenser.

## ITEM #23: WORKTABLE WITH SINK

QUANTITY: One (1)
MANUFACTURER: Custom Fabricated
MODEL NO.: #14 GA Stainless Steel
PERTINENT DATA: 10'-0" Long x 2'-6" Wide x 3'-0" High
UTILITIES REQ'D: 1/2" HW, 1/2" CW, 1-1/2" IW
ALTERNATE MFRS.: Eagle; Pro-Stainless; CSI; Keystone

Fabricate and set-in-place per Equipment Plan, Sheet K-101; Fabrication Detail, Sheet K-501A, and the following:

1. Perimeter edge rolls per Detail 1.02M.

2. Framework per Detail 1.05.

3. Legs per Detail 1.07. Flanged feet on each corner leg.

4. Stainless steel undershelf per Detail 1.11.

NOT FOR BIDDING

**ITEM #23: (Continued)**

5. Two (2) stainless steel drawer assemblies per Detail 1.14, Type I with locks.

6. Full-length table-mounted, double-sided utensil rack per Detail 1.18B.

7. Worktable per Detail 2.01.

8. 18" x 18 " x 10" deep utility sink per Detail 3.04 with stainless steel waste lever angle bracket fully welded to underside of sink.

9. Sound-deaden underside of tabletop and sink with NSF-approved sound dampening material.

10. Accessories:
    -- One (1) T&S #B-325 deck-mounted swing-spout gooseneck faucet with #B-199-2 aerator.

**ITEM #24: PASS-THRU REFRIGERATOR, MOBILE**

QUANTITY: Four (4)
MANUFACTURER: Victory
MODEL NO.: RS-2D-S1-PT-HD (N058)
PERTINENT DATA: Two-Section, Self-Contained, Stainless Steel Interior/Exterior
UTILITIES REQ'D: 10.7A, 120V, 1PH
ALTERNATE MFRS.: Continental; Traulsen

Furnish and set-in-place per Equipment Plan, Sheet K-101; Manufacturer's Instructions and the following:

1. Half-height doors hinged per Equipment Plan, both sides. Glass doors on kitchen side, solid doors on serving side.

2. Cylinder door locks, keyed-alike.

3. Type A tray slide assembly for 18"x26" sheet pans with 2" spacing, each compartment.

4. Exterior mounted digital thermometer installed on kitchen side.

5. Plastic laminate finish factory applied to door fronts on serving side only, color as selected by Architect; K.E.C. to verify

6. 5" diameter heavy-duty swivel casters, two (2) with brakes.

7. Cord and plug set.

NOT FOR BIDDING

## ITEM #25: PASS-THRU HEATED CABINET, MOBILE

QUANTITY: Four (4)
MANUFACTURER: Victory
MODEL NO.: HS-1D-1-PT-HD (N058)
PERTINENT DATA: One-Section, Self-Contained, Stainless Steel Interior/Exterior
UTILITIES REQ'D: 6.3A, 208V, 1PH
ALTERNATE MFRS.: Continental; Traulsen

Furnish and set-in-place per Equipment Plan, Sheet K-101; Manufacturer's Instructions and the following:

1. Half-height doors hinged per Equipment Plan, both sides. Glass doors on kitchen side, solid doors on serving side.

2. Cylinder door locks, keyed-alike.

3. Universal tray slide assembly installed on 5" centers in lieu of wire shelves, five (5) pair per compartment, ten (10) pair total, each unit.

4. Exterior mounted digital thermometer installed on kitchen side.

5. Plastic laminate finish factory applied to door fronts on serving side only, color as selected by Architect; K.E.C. to verify

6. 5" diameter heavy-duty swivel casters, two (2) with brakes.

7. Cord and plug set with matching receptacle furnished and installed by Electrical Contractor.

## ITEM #26: WORKTABLE

QUANTITY: One (1)
MANUFACTURER: Custom Fabricated
MODEL NO.: #14 GA Stainless Steel
PERTINENT DATA: 10'-0" Long x 2'-6" Wide x 3'-0" High
UTILITIES REQ'D: 1/2" HW, 1/2" CW, 1-1/2" IW
ALTERNATE MFRS.: Eagle; Pro-Stainless; CSI; Keystone

Fabricate and set-in-place per Equipment Plan, Sheet K-101; Fabrication Detail, Sheet K-501A and the following:

1. Front and right end edge roll per Detail 1.02M.

2. 6" high back and left end splash per Detail 1.04A.

3. Framework per Detail 1.05.

4. Legs per Detail 1.07.

5. Stainless steel undershelf per Detail 1.11.

NOT FOR BIDDING

**ITEM #26: (Continued)**

6. Two (2) stainless steel drawer assemblies per Detail 1.14, Type I, with locks.

7. Worktable per Detail 2.01.

8. Sound-deaden underside of tabletop with NSF-approved sound dampening material.

**ITEM #27: HOT LUNCH SERVING COUNTER**

| | |
|---|---|
| QUANTITY: | One (1) |
| MANUFACTURER: | EcoMark by The Delfield Co. |
| MODEL NO.: | Stainless Steel Construction, Solid Surface Extended Top, Laminated Front & Exposed Side |
| PERTINENT DATA: | 10'-0" Long x 3'-9" Wide x 2'-10" High |
| UTILITIES REQ'D: | ---- |
| ALTERNATE MFR.: | SelectLine by Low-Temp Industries; Essence by Multiteria; BSI |

Fabricate and set-in-place per Equipment Plan, Sheet K-101; Fabrication Detail, Sheet K-501B, Manufacturer's Shop Drawing and the following:

1. Base cabinet constructed of stainless steel all-welded angle frame per Detail 4.02.

2. Stainless steel front and end paneling per Detail 4.05A. Front panels with decorative accent; design and color as selected by Architect, K.E.C. to verify.

3. Heavy-duty counter legs per Detail 1.08. Stainless steel skirting on front and exposed end.

4. Solid surface top: color as selected by Architect, K.E.C. to verify.

5. Provide cut-out in top for Item #27A: Hot Food Well.

6. 8" plate shelf on server's side set 10" below countertop with closed ends.

7. 12" wide x 72" long x ½" thick Richlite™ removable and reversible cutting board.

8. Louvered hinged doors per Detail 4.27, with locks.

9. All electrical components shall be pre-wired at fabricator's shop to circuit breaker panel located per Detail, Sheet K-104.

NOT FOR BIDDING

## ITEM #27a: HOT FOOD WELLS

QUANTITY: One (1)
MANUFACTURER: Hatco Corporation
MODEL NO.: HWBI-4DA (N058)
PERTINENT DATA: Four-Well, Drop-In, Manifold Drain, Auto-Fill
UTILITIES REQ'D: 23.2A, 208V, 1PH; 1/2″ CW, 1" IW
ALTERNATE MFR.: The Delfield Company; Atlas Metal; LTI

Furnish and install Hot Lunch Serving Counter per Equipment Plan, Sheet K-101; Manufacturer's Shop Drawing and the following:

1. Ship control panel loose for mounting into counter facia by Fabricator.

2. Accessories:
   -- Four (4) Vollrath Company #30040, 12x20x 4" deep stainless steel pans.
   -- Four (4) Vollrath Company #77200 full size solid dome covers.

## ITEM #27b: FOOD PROTECTOR

QUANTITY: One (1)
MANUFACTURER: BSI, LLC
MODEL NO.: ZG9930 (N058)
PERTINENT DATA: ZGuard, Single-Tier, Adjustable Hinged Panels, NSF 2 Compliant
UTILITIES REQ'D: 160W, 120V, 1PH
ALTERNATE MFR.: Premier Metal and Glass; FlexiShield by The Delfield Co.

Furnish and install on Hot Lunch Serving Counter per Equipment Plan, Sheet K-101; Fabrication Detail, Sheet K-501B; Manufacturer's Shop Drawing and the following:

1. 1" diameter round tubing uprights with brushed stainless steel finish. K.E.C. to verify with Architect.

2. Overall length as shown on plan.

3. Accessories:
   -- Full length LED light fixture and heat lamp. Conceal wiring in uprights and extend to remote switch mounted in counter facia at server side.
   -- 1/2" tempered glass top.
   -- 1/4" tempered glass end panels.

4. Mount securely to top of Item #27: Hot Lunch Serving Counter with undercounter flange mount.

5. Furnish fully detailed shop drawings for review and approval by local health code agency.

NOT FOR BIDDING

## ITEM #27c: HEATED SANDWICH MERCHANDISER

QUANTITY: One (1)
MANUFACTURER: Hatco Corporation
MODEL NO.: HZMH-42D (N058)
PERTINENT DATA: Single Service, Countertop, Dual Slant Shelf
UTILITIES REQ'D: 12.1A, 120/208V, 1PH
ALTERNATE MFR.: APW Wyott

Furnish and set-in-place per Equipment Plan, Sheet K-101; Manufacturer's Instructions and the following:

1. Accessories:
   -- Flip-up doors on customer's side, each shelf.
   -- Designer color inset panels, color as selected by Architect, K.E.C. to verify.
   -- #DS-ITC indicating temperature control.

2. Cord and plug set.

## ITEM #28: PIZZA SERVING COUNTER

QUANTITY: One (1)
MANUFACTURER: EcoMark by The Delfield Co.
MODEL NO.: Stainless Steel Construction, Solid Surface Extended Top, Laminated Front & Exposed Side
PERTINENT DATA: 10'-0" Long x 3'-9" Wide x 2'-10" High
UTILITIES REQ'D: ----
ALTERNATE MFR.: SelectLine by Low Temp Industries; Essence by Multiteria; BSI

Fabricate and set-in-place per Equipment Plan, Sheet K-101; Fabrication Detail, Sheet K-501B, Manufacturer's Shop Drawing and the following:

1. Base cabinet constructed of stainless steel all-welded angle frame per Detail 4.02.

2. Stainless steel front and end paneling per Detail 4.05A. Front panels with decorative accent; design and color as selected by Architect, K.E.C. to verify.

3. Heavy-duty counter legs per Detail 1.08. Stainless steel skirting on front and exposed end.

4. Solid surface top: color as selected by Architect, K.E.C. to verify.

5. Provide cut-outs in top for Item #28a: Heated Shelf.

6. 8" plate shelf on server's side set 10" below countertop with closed ends.

7. Louvered hinged doors per Detail 4.27, with locks.

8. All electrical components shall be pre-wired at fabricator's shop to circuit breaker panel located per Detail, Sheet K-104.

NOT FOR BIDDING

**ITEM #28a: HEATED SHELF**

QUANTITY: Two (2)
MANUFACTURER: Hatco Corporation
MODEL NO.: GRSBF-42-I (N058)
PERTINENT DATA: Thermostat Controlled, Drop-In W/Flush Top
UTILITIES REQ'D: 885W, 120V, 1PH
ALTERNATE MFR.: Vollrath; LTI

Furnish and install in Pizza Serving Counter per Equipment Plan, Sheet K-101; Manufacturer's Instructions and the following:

1. Recess controls in counter apron, server's side.

**ITEM #28b: FOOD PROTECTOR**

QUANTITY: Two (2)
MANUFACTURER: BSI, LLC
MODEL NO.: ZG9930 (N058)
PERTINENT DATA: ZGuard, Single-Tier Adjustable Hinged Panels, NSF 2 Compliant
UTILITIES REQ'D: 160W, 120V, 1PH
ALTERNATE MFR.: Premier Metal and Glass; FlexiShield by The Delfield Co.

Furnish and install on Pizza Serving Counter per Equipment Plan, Sheet K-101; Fabrication Detail, Sheet K-501B; Manufacturer's Shop Drawing and the following:

1. 1" diameter round tubing uprights with brushed stainless steel finish. K.E.C. to verify with Architect.

2. Overall lengths shown on plan.

3. Accessories:
   -- Full-length single heat and light combo. Conceal wiring in uprights and extend to remote switch mounted in counter facia.
   -- 1/2" tempered glass top.
   -- 1/4" tempered glass end panels.

4. Mount securely to top of Item #28: Pizza Serving Counter with undercounter flange mount.

5. Furnish fully detailed shop drawings for review and approval by local health code agency.

NOT FOR BIDDING

## ITEM #29: DELI SERVING COUNTER

QUANTITY: One (1)
MANUFACTURER: EcoMark by The Delfield Co.
MODEL NO.: Stainless Steel Construction, Solid Surface Extended Top, Laminated Front & Exposed Side
PERTINENT DATA: 10'-0" Long x 3'-9" Wide x 2'-10" High
UTILITIES REQ'D: ----
ALTERNATE MFR.: SelectLine by Low-Temp Industries; Essence by Multiteria; BSI

Fabricate and set-in-place per Equipment Plan, Sheet K-101; Fabrication Detail, Sheet K-501B, Manufacturer's Shop Drawing and the following:

1. Base cabinet constructed of stainless steel all-welded angle frame per Detail 4.02.

2. Stainless steel front and end paneling per Detail 4.05A. Front panels with decorative accent; design and color as selected by Architect, K.E.C. to verify.

3. Heavy-duty counter legs per Detail 1.08. Stainless steel skirting on front and exposed end.

4. Solid surface top: color as selected by Architect, K.E.C. to verify.

5. Provide cut-out in top for Item #29a: Hot/Cold Food Well and Item #29c: Refrigerated Display Merchandiser.

6. 8" plate shelf on server's side set 10" below countertop with closed ends.

7. 10" wide x 72" long x ½" thick Richlite™ removable and reversible cutting board.

8. Louvered hinged doors per Detail 4.27.

9. All electrical components shall be pre-wired at fabricator's shop to circuit breaker panel located per Detail, Sheet K-104.

## ITEM #29a: COMBINATION HOT/COLD FOOD WELLS

QUANTITY: One (1)
MANUFACTURER: Hatco Corporation
MODEL NO.: HCWBI-5DA (N058)
PERTINENT DATA: Five-Well, Drop-In, Manifold Drain, Auto-Fill
UTILITIES REQ'D: 6.0KW, 120/208V, 1PH; 1/2″ CW, 3/4" IW
ALTERNATE MFR.: The Delfield Co.; Atlas Metal; LTI

Furnish and install Hot/Cold Food Counter per Equipment Plan, Sheet K-101; Manufacturer's Shop Drawing and the following:

1. Ship control panel loose for mounting into counter facia by Fabricator.

NOT FOR BIDDING

**ITEM #29a: (Continued)**

2. Accessories:
   -- Five (5) Vollrath Company #30040, 12x20x 4" deep stainless steel pans.
   -- Five (5) Vollrath Company #77200 full size solid dome covers.

**ITEM #29b: FOOD PROTECTOR**

QUANTITY: One (1)
MANUFACTURER: BSI, LLC
MODEL NO.: ZG9930 (N058)
PERTINENT DATA: ZGuard, Single-Tier, Adjustable Hinged Panels, NSF 2 Compliant
UTILITIES REQ'D: 160W, 120V, 1PH
ALTERNATE MFR.: Premier Metal and Glass; FlexiShield by The Delfield Co.

Furnish and install on Hot/Cold Food Serving Counter per Equipment Plan, Sheet K-101; Fabrication Detail, Sheet K-501B; Manufacturer's Shop Drawing and the following:

1. 1" diameter round tubing uprights with brushed stainless steel finish. K.E.C. to verify with Architect.

2. Overall length as shown on plan.

3. Accessories:
   -- Full-length LED light fixture. Conceal wiring in uprights and extend to remote switch mounted in counter facia.
   -- 1/2" tempered glass top.
   -- 1/4" tempered glass end panels.

4. Mount securely to top of Item #29. Deli Serving Counter with undercounter flange mount.

5. Furnish fully detailed shop drawings for review and approval by local health code agency.

**ITEM #29c: REFRIGERATED DISPLAY MERCHANDISER**

QUANTITY: One (1)
MANUFACTURER: Structural Concepts
MODEL NO.: NE3627RSSV (N058)
PERTINENT DATA: Slide-in, Self-Contained, Rear-Loading
UTILITIES REQ'D: 16.0A, 120V, 1PH
ALTERNATE MFRS.: RPI, Federal

Furnish and set-in-place per Equipment Plan, Sheet K-101; Manufacturer's Instructions, and the following:

1. Accessories:
   -- Shelf lights.
   -- Night curtain, retractable, non-locking.

NOT FOR BIDDING

**ITEM #29c: (Continued)**

-- 5-year compressor warranty.
-- Clear glass rear sliding doors with locks.

2. Cord and plug set.

3. Mount securely to top of Item #29: Deli Serving Counter.

**ITEM #30: SOUP & SALAD SERVING COUNTER**

QUANTITY: One (1)
MANUFACTURER: EcoMark by The Delfield Co.
MODEL NO.: Stainless Steel Construction, Solid Surface Extended Top, Laminated Front & Exposed Side
PERTINENT DATA: 10'-0" Long x 3'-9" Wide x 2'-10" High
UTILITIES REQ'D: ----
ALTERNATE MFR.: SelectLine by Low-Temp Industries; Essence by Multiteria; BSI

Fabricate and set-in-place per Equipment Plan, Sheet K-101, Fabrication Detail, Sheet K-501B, Manufacturer's Shop Drawing and the following:

1. Base cabinet constructed of stainless steel all-welded angle frame per Detail 4.02.

2. Stainless steel front and end paneling per Detail 4.05A. Front panels with decorative accent; design and color as selected by Architect, K.E.C. to verify.

3. Heavy-duty counter legs per Detail 1.08. Stainless steel skirting on front and exposed end.

4. Solid surface top: color as selected by Architect, K.E.C. to verify.

5. Provide cut-out in top for Item #30a: Cold Food Well.

6. 8" plate shelf on server's side set 10" below countertop with closed ends.

7. Louvered hinged doors per Detail 4.27, with locks.

8. All electrical components shall be pre-wired at fabricator's shop to circuit breaker panel located per Detail, Sheet K-104.

**ITEM #30a: REFRIGERATED COLD PAN**

QUANTITY: One (1)
MANUFACTURER: Hatco Corporation
MODEL NO.: CWB-4 (N058)
PERTINENT DATA: (4)-Pan Capacity, Drop-In, Self-Contained
UTILITIES REQ'D: 8.7A, 120V, 1PH; 1" IW
ALTERNATE MFR.: The Delfield Company; Atlas Metal; LTI

NOT FOR BIDDING

**ITEM #30a: (Continued)**

Furnish and install in Soup & Salad Counter per Equipment Plan, Sheet K-101; Manufacturer's Shop Drawing and the following:

1. Accessories:
   -- Stainless steel adapter bars for half-size pans.
   -- Eight (8) Vollrath #90242 half-size pans.
   -- #CWB-4SLANT slant option.

**ITEM #30b: FOOD PROTECTOR**

QUANTITY: One (1)
MANUFACTURER: BSI, LLC
MODEL NO.: ZG9930 (N058)
PERTINENT DATA: ZGuard, Single-Tier, Adjustable Hinged Panels, NSF 2 Compliant
UTILITIES REQ'D: 160W, 120V, 1PH
ALTERNATE MFR.: Premier Metal and Glass; FlexiShield by The Delfield Co.

Furnish and install on Soup/Salad Serving Counter per Equipment Plan, Sheet K-101; Fabrication Detail, Sheet K-501B; Manufacturer's Shop Drawing and the following:

1. 1" diameter round tubing uprights with brushed stainless steel finish. K.E.C. to verify with Architect.

2. Overall length as shown on plan.

3. Accessories:
   -- Full-length LED light fixture. Conceal wiring in uprights and extend to remote switch mounted in counter facia.
   -- 1/2" tempered glass top.
   -- 1/4" tempered glass end panels.

4. Mount securely to top of Item #30: Soup/Salad Serving Counter with undercounter flange mount.

5. Furnish fully detailed shop drawings for review and approval by local health code agency.

**ITEM #30c: HEATED SANDWICH MERCHANDISER**

QUANTITY: One (1)
MANUFACTURER: Hatco Corporation
MODEL NO.: HZMH-42D (N058)
PERTINENT DATA: Single Service, Countertop, Dual Slant Shelf
UTILITIES REQ'D: 12.1A, 120/208V, 1PH
ALTERNATE MFR.: APW Wyott

Furnish and set-in-place per Equipment Plan, Sheet K-101; Manufacturer's Instructions and the following:

NOT FOR BIDDING

**ITEM #30c: (Continued)**

1. Accessories:
   -- Flip-up doors on customer's side, each shelf.
   -- Designer color inset panels, color as selected by Architect, K.E.C. to verify.
   -- #DS-ITC indicating temperature control.

2. Cord and plug set.

**ITEM #31: CASHIER STAND, MOBILE**

QUANTITY: Two (2)
MANUFACTURER: EcoMark by The Delfield Co.
MODEL NO.: Stainless Steel Construction, Extended Solid Surface Top, Laminated Front & Exposed Side
PERTINENT DATA: 4'-6" Long x 4'-6" Wide x 2'-10" High
UTILITIES REQ'D: ----
ALTERNATE MFR.: SelectLine by Low-Temp Industries; Essence by Multiteria; BSI

Fabricate and set-in-place per Equipment Plan, Sheet K-101; Fabrication Detail, Sheet K-501B, Manufacturer's Shop Drawing and the following:

1. Base cabinet constructed of stainless steel all-welded angle frame per Detail 4.02.

2. 5" diameter heavy-duty polyurethane swivel casters, two (2) with brakes. Stainless steel skirting on front and exposed end.

3. Stainless steel front and end paneling per Detail 4.05A. Front panels with decorative accent; design and color as selected by Architect, K.E.C. to verify.

4. Solid surface top; color as selected by Architect, K.E.C. to verify.

5. Provide cut-out in top with grommet for power cord access to receptacle in floor.

6. Provide cut-out in top for Item #32: Drop-In Ice Cream Merchandiser.

7. Cashier's drawer assembly with stainless steel pull and cylinder lock sized for removable compartmented plastic cash tray and lock; Indiana Cash Drawer Co., Model #5-BT.

**ITEM #32: DROP-IN ICE CREAM MERCHANDISER**

QUANTITY: Two (2)
MANUFACTURER: Silver King
MODEL NO.: SKED123-TL-1-BA1 (N058)
PERTINENT DATA: Drop-In, Hinged Lid
UTILITIES REQ'D: 2.7A, 120V, 1PH
ALTERNATE MFRS.: ColorPoint by Low-Temp Industries

NOT FOR BIDDING

**ITEM #32: (Continued)**

Furnish and set-in-place per Equipment Plan, Sheet K-101; Manufacturer's Instructions and the following:

1. Accessories:
   -- #10315-08 lock bar kit, each unit.

2. Cord and plug set.

**ITEM #33: CASH REGISTER -- (N.I.C. – FURNISHED BY OWNER)**

QUANTITY: Four (4)

**ITEM #34: POT WASHING SINK**

QUANTITY: One (1)
MANUFACTURER: Custom Fabricated
MODEL NO.: #14 GA Stainless Steel
PERTINENT DATA: 10'-3" Long x 2'-6" Wide x 2'-10" High
UTILITIES REQ'D: (2) 3/4" HW, (2) 3/4" CW, (3) 3/4" IW
ALTERNATE MFRS.: Eagle, Pro-Stainless, CSI; Keystone

Fabricate and set-in-place per Equipment Plan, Sheet K-101; Fabrication Detail, Sheet K-501A; and the following:

1. Front and end edge rolls per Detail 1.03B.

2. 13" high back splash per Detail 1.04A.

3. Framework per Detail 1.05.

4. Legs per Detail 1.07.

5. Crossbracing per Detail 1.10.

6. Stainless steel undershelf on both ends per Detail 1.11.

7. Two (2) table-mounted stainless steel overshelf with stainless steel sliding pot hooks per Detail 1.12.

8. Pot sink and drainboards per Detail 3.01.

9. Sound-deaden underside of sinks and drainboards with NSF-approved sound dampening material.

10. Accessories:
    -- One (1) T&S #B-290 backsplash mounted swing spout faucet.
    -- One (1) T&S #B-0133-ADF-12-BJ pre-rinse spray faucet with 12" swing-spout add-on faucet, 6" wall bracket and backflow preventer.

NOT FOR BIDDING

**ITEM #34: (Continued)**

-- Three (3) T&S #B-3950-01 twist handle drains with rear-connected over-flows and basket strainers.

11. Item will remain shrink-wrapped until ready for final connection by Plumbing Contractor. Immediately following completion of final connections, K.E.C. shall re-shrink-wrap tubs or provide removable panel to avoid use by construction trades.

**ITEM #35: SOILED DISHTABLE**

QUANTITY: One (1)
MANUFACTURER: Custom Fabricated
MODEL NO.: #14 GA Stainless Steel
PERTINENT DATA: 7'-0"± Long x 2'-6" Wide x 2'-10" High
UTILITIES REQ'D: 1/2" HW, 1/2" CW, 1-1/2" IW
ALTERNATE MFRS.: Eagle, Pro-Stainless, CSI; Keystone

Fabricate and set-in-place per Equipment Plan, Sheet K-101; Fabrication Detail, Sheet K-501A; and the following:

1. Front and right end edge roll per Detail 1.02B.

2. 13" high back and partial right endsplash per Detail 1.04A.

3. Framework per Detail 1.05.

4. Legs per Detail 1.07.

5. Crossbracing per Detail 1.10.

6. Soiled dishtable per Detail 2.02.

7. Table trough at entrance to dishmachine per Detail 2.03.

8. Weld collar adapter to underside of sink for Disposer, Item #36.

9. Stainless steel disposer switch bracket.

10. 2-0" long table-mounted single-sided slanted glass rack shelf per Detail 2.17.

11. 20" wide x 8" deep integral pre-rinse sink with one-piece removable #22 gauge perforated stainless steel scrap basket with 1" diameter fully welded tubular cross-rails set flush with tabletop. Raise deck at rear of sink 6" for deck-mounted pre-rinse spray and extend to opening of dishmachine to act as rack guide.

12. Provide stainless steel crossrails below for storage of 20" x 20" dish/glass racks.

13. Sound-deaden underside of drainboard with NSF-approved sound dampening material.

NOT FOR BIDDING

**ITEM #35: (Continued)**

14. Accessories:
    -- One (1) T&S #B-133 backsplash-mounted pre-rinse spray with built-in back flow preventer and #B-109 wall bracket.

**ITEM #36: DISPOSER**

QUANTITY: One (1)
MANUFACTURER: In-Sink-Erator
MODEL NO.: SS-200-7-MRS (N058)
PERTINENT DATA: #7 Collar Adapter Assembly
UTILITIES REQ'D: 2.0 HP, 480V, 3PH; 1/2" CW, 2" W
ALTERNATE MFRS.: Salvajor

Furnish and install per Equipment Plan, Sheet K-101; Manufacturer's Instructions and the following:

1. Manual reverse switch mounted on 14 GA stainless steel bracket.

2. Weld No. 7 collar adapter to underside of pre-rinse sink Item #35.

3. Accessories:
    -- One (1) T&S Model #B-455 vacuum breaker in lieu of standard unit.

**ITEM #37: DISHMACHINE**

QUANTITY: One (1)
MANUFACTURER: Hobart Corporation
MODEL NO: AM15T (N058)
PERTINENT DATA: Fully-Automatic, High-Temp, Door-Type, With Built-in Booster Heater (70°F Rise), Tall Chamber
UTILITIES REQ'D: 23.7A, 480V, 3PH; 10.0A, 120V, 1PH; 3/4"HW (140°F.), 1/2"CW (Drain Water Cooling Kit), 2" IW
ALTERNATE MFR.: Champion, Jackson, Meiko

Furnish and set-in-place per Equipment Plan, Sheet K-101; Manufacturer's Instructions and the following:

1. Factory installed vacuum breaker.

2. Soap dispensing system and rinse additive system by chemical vendor.

3. Stainless steel feet, frame, legs and front panel.

4. Electric tank heat.

5. Straight-thru installation.

6. Accessories:
    -- Two (2) #DISHRAK-PEG20 peg-type dish racks.

NOT FOR BIDDING

**ITEM #37: (Continued)**

-- Two (2) #DISHRAK-COM20 combination-type dish racks.
-- One (1) #DWT1 drain water tempering kit.
-- One (1) built-in booster heater.
-- One (1) #WTRHAM-ARREST water hammer arrestor kit with brass pressure regulator valve.
-- One (1) #SPEC-KIT single-point electrical connection.
-- Two (2) #RACK-6PAN 6-pan rack to hold sheet pans.

**ITEM #38: CONDENSATE CANOPY**

QUANTITY: One (1)
MANUFACTURER: Captive-Aire
MODEL NO: 4230-VHB-G (N058)
PERTINENT DATA: Stainless Steel, Exhaust Only Canopy
UTILITIES REQ'D: 525 CFM; 3/4" IW
ALTERNATE MFR.: Avtec; Gaylord, Caddy

Fabricate and install per Equipment Plan, Sheet K-101; Canopy Details, Sheet K-503; Manufacturer's Shop Drawing and the following:

1. 3'-6" wide x 3'-6" long x 2'-6" high with bottom edge mounted at 6'-8" A.F.F. Entire unit constructed of 18 GA type 304 stainless steel with #4 finish on all exposed surfaces.

2. 2" wide full-perimeter integral gutter with 1½" turn-up and 3/4" stainless steel drain connection.

3. Integral stainless steel rod hanger brackets, each corner.

4. Stainless steel duct tap collar with removable aluminum mesh filter.

5. Stainless steel perimeter closure panels to finished ceiling by K.E.C.; verify ceiling height.

6. Accessories:
   -- #18GA stainless steel wall flashing from bottom edge of hood to top of finish floor base. Extend full length of hood body. Attach to wall with non-exposed fasteners.

**ITEM #39: CLEAN DISHTABLE**

QUANTITY: One (1)
MANUFACTURER: Custom Fabricated
MODEL NO.: #14 Gauge Stainless Steel Construction
PERTINENT DATA: 4'-6"± L x 2'-6" W x 2'-10" H
UTILITIES REQ'D: ----
ALTERNATE MFRS.: Eagle, Pro-Stainless, CSI; Keystone

Fabricate and set-in-place per Equipment Plan, Sheet K-101; Fabrication Detail, Sheet K-501A; and the following:

1. Front and left end edge roll per Detail 1.02B.

NOT FOR BIDDING

**ITEM #39: (Continued)**

2. 13" high backsplash per Detail 1.04A.

3. Framework per Detail 1.05.

4. Legs per Detail 1.07.

5. Stainless steel undershelf per Detail 1.11.

6. Dishtable per Detail 2.02.

7. Sound deaden underside of drainboard with NSF-approved sound dampening material.

**ITEM #40: MOP SINK & RACK**

QUANTITY: One (1)
MANUFACTURER: Eagle Group
MODEL NO.: F1916 (N058)
PERTINENT DATA: Floor Mounted, Stainless Steel
UTILITIES REQ'D: 1/2" HW, 1/2" CW, 2" W
ALTERNATE MFRS.: Advance/Tabco; IMC/Teddy

Furnish and set-in-place per Equipment Plan, Sheet K-101; Manufacturer's Instructions and the following:

1. Accessories:
   -- One (1) #312690 service sink wall faucet.
   -- One (1) #321561 mop holder.
   -- One (1) #312689 hose and bracket assembly.

2. K.E.C. to furnish #16 gauge stainless steel wall flashing along two (2) walls adjacent sink, 48" high. Attach to wall with non-exposed fasteners and seal to wall and sink.

**ITEM #41: POT & PAN SHELVING, MOBILE**

QUANTITY: One (1)
MANUFACTURER: InterMetro Industries Corporation
MODEL NO.: MetroMax i (N058)
PERTINENT DATA: Four-Tier High, Open-Grid Shelf Mat, Polymer
UTILITIES REQ'D: ----
ALTERNATE MFRS.: Eagle Group

Furnish and set-in-place per Equipment Plan, Sheet K-101; Manufacturer's Instructions and the following:

1. One (1) #MX2448G section; 24" W x 48" L x 4-tier high.

2. Four (4) #MX63UP polymer posts, 63" high.

NOT FOR BIDDING

**ITEM #41: (Continued)**

3. Two (2) #5MPX polyurethane swivel casters with bumpers.

4. Two (2) #5MPBX polyurethane swivel casters with brakes and bumpers.

5. Plastic wedge lock connectors, quantity as required.

6. Locate bottom shelf @ 12" A.F.F.; space remaining shelves equally.

7. Accessories:
   -- One (1) #XTR2448XE tray drying rack.
   -- Five (5) #MXD24-8 shelf dividers.

**ITEM #42: WORKTABLE**

QUANTITY: One (1)
MANUFACTURER: Custom Fabricated
MODEL NO.: #14 GA Stainless Steel
PERTINENT DATA: 7'-6" Long x 3'-0" Wide x [illegible]'-0" High
UTILITIES REQ'D: 1/2" HW, 1/2" CW, 1-1/2" HW
ALTERNATE MFRS.: Eagle Group; Pro-Stainless; CSI; Keystone

Fabricate and set-in-place per Equipment Plan, Sheet K-101; Fabrication Detail, Sheet K-501A and the following:

1. Front and end edge roll per Detail 1.02M.

2. 6" high backsplash per Detail 1.04A.

3. Framework per Detail 1.05.

4. Legs per Detail 1.07.

5. Stainless steel undershelf per Detail 1.11.

6. One (1) stainless steel drawer assembly per Detail 1.14, Type I, with lock.

7. Worktable per Detail 2.01.

NOT FOR BIDDING

**ITEM #43: RETRACTABLE CORD REEL**

QUANTITY: Four (4)
MANUFACTURER: APC Group Inc.
MODEL NO.: Kitchen Leash (N058)
PERTINENT DATA: Ceiling-Mounted, With Adjustable Stop, Non-GFI Receptacle
UTILITIES REQ'D: 20.0A, 120V, 1PH
ALTERNATE MFRS.: Hubell

Furnish and install per Equipment Plan, Sheet K-101; Manufacturer's Instructions and the following:

1. Electrical Contractor to furnish and install GFCI type breaker at kitchen electrical panel board.

**ITEM #44: MICROWAVE STEAMER OVEN**

QUANTITY: One (1)
MANUFACTURER: Panasonic
MODEL NO.: NE2180 (N058)
PERTINENT DATA: 2,100 Watts, Large Oven Capacity, Stainless Steel Interior/Exterior; Sonic Steamer®
UTILITIES REQ'D: 20.0A, 208V, 1PH
ALTERNATE MFRS.: None

Furnish and set-in-place per Equipment Plan, Sheet K-101; Manufacturer's Instructions and the following:

1. Cord and plug set.

**ITEM #45: SLICER**

QUANTITY: One (1)
MANUFACTURER: Bizerba
MODEL NO.: GSP HD 1150 (N058)
PERTINENT DATA: Automatic 3- Speed Carriage Drive, 13" Diameter Blade
UTILITIES REQ'D: 3.6A, 120V, 1PH
ALTERNATE MFRS.: Hobart

Furnish and set-in-place per Equipment Plan, Sheet K-101; Manufacturer's Instructions and the following:

1. Accessories:
   -- Product fence set.
   -- Vegetable chute with stomper.
   -- 4½ legs.
   -- #B56-BZ-1 26" 31.75" high stainless steel equipment stand with retractable casters.

2. Cord and plug set.

NOT FOR BIDDING

**ITEM #46: MIXER, 20-QUART**

QUANTITY: One (1)
MANUFACTURER: Hobart Corporation
MODEL NO.: HL200-1STD (N058)
PERTINENT DATA: Bench Model, Standard Finish with Timer, Legacy Series
UTILITIES REQ'D: 1/2 HP, 120V, 1PH
ALTERNATE MFRS.: Varimixer, Doyon

Furnish and set-in-place per Equipment Plan, Sheet K-101; Manufacturer's Instructions and the following:

1. Pre-configured 120V/1PH mixer with standard accessory package consisting of: 20-qt. stainless steel bowl, 20-qt. aluminum "B" beater and 20-qt. stainless steel "D" wire whip.

2. Accessories:
   -- One (1) #EDDOUGH-ALU20H "ED" Dough Hook.
   -- One (1) #SPLASH-LEX020 lexan splash cover.
   -- One (1) Piper Products #MX-29-TSS stainless steel mixer stand with heavy-duty swivel casters with polyurethane tires.

3. Cord and plug set.

**ITEM #47: FOOD PROCESSOR**

QUANTITY: One (1)
MANUFACTURER: Robot Coupe USA, Inc.
MODEL NO.: R-652VV (N058)
PERTINENT DATA: Continuous Feed Hopper, Dual Purpose, Variable Speed, 7-Qt. Bowl
UTILITIES REQ'D: 15.0A, 120V, 1PH
ALTERNATE MFRS.: Hobart

Furnish and set-in-place per Equipment Plan, Sheet K-101; Manufacturer's Instructions and the following:

1. Standard food processor package consisting of: food processor, 7-qt. stainless steel bowl, continuous feed vegetable preparation attachment, (1) #28058 1/8" grating disc and (1) #28064 1/8" slicing disc.

2. Accessories:
   -- One (1) #R255 disc rack.
   -- One (1) #R199 Robo-Cart equipment stand.

3. Cord and plug

NOT FOR BIDDING

## ITEM #48: FRUIT SECTIONIZER

QUANTITY: One (1)
MANUFACTURER: Sunkist
MODEL NO.: S-105
PERTINENT DATA: 3-in-1, 2 HALVES scored in 3 wedges ea., NSF Listed
UTILITIES REQ'D: ----
ALTERNATE MFRS.: Vollrath

Furnish and set-in-place per Equipment Plan, Sheet K-101; Manufacturer's Instructions and the following:

1. Accessories:
   -- 6 slice Blade cup, w/cover, fits S-10 (S-4B)
   -- Plunger slicer, fits part S-04, 6 wedge blade cup (S-10)
   -- 8 wedge blade cup (S-29B)
   -- Apple Plunger, fits S-32 (S-33, S-32)
   -- Apple corer cup, fits S-33 (S-32B)
   -- Plastic production stand (S-31)

## ITEM #49: ICE MACHINE/BIN

QUANTITY: One (1)
MANUFACTURER: Manitowoc
MODEL NO.: IYT0620A/B420 (K058)
PERTINENT DATA: Air-Cooled, 575-LB. Maker, 383-LB. Bin, Half-Dice Cube Size
UTILITIES REQ'D: 12.2A, 120V, 1PH; ¼" CW, ½" IW (Maker Drain), ¾" IW (Bin Drain)
ALTERNATE MFRS.: Ice-O-Matic; Scotsman

Furnish and set-in-place per Equipment Plan, Sheet K-101; Manufacturer's Instructions and the following:

1. Stainless steel exterior finish, ice machine and bin.

2. Accessories:
   -- One (1) Everpure #EV9324-21 InsurIce i2000² Single water filter system with Everpure #EV9554-26 Coarse Filter, mounted on manufacturer's common wall bracket.
   -- 6" high stainless steel legs with adjustable bullet feet.
   -- Custom fabricated stainless steel ice scoop holder mounted to right-hand side of bin per Detail Sheet K-501.

3. Backflow preventor installed on incoming water line by Plumbing Contractor.

4. Cord and plug with matching receptacle furnished and installed by Electrical Contractor.

NOT FOR BIDDING

**ITEM #50: MILK COOLER, MOBILE**

QUANTITY: Two (2)
MANUFACTURER: Continental
MODEL NO.: MC4-SS-D/OOLP (N058)
PERTINENT DATA: 49" Wide, Dual Access, Forced-Air, 12-Crate Capacity
UTILITIES REQ'D: 7.4A, 120V, 1PH
ALTERNATE MFRS.: Traulsen

Furnish and set-in-place per Equipment Plan, Sheet K-101; Manufacturer's Instructions and the following:

1. Stainless steel exterior and interior.

2. Cord and plug set.

3. Cylinder lid lock.

4. Swivel casters with brakes.

5. Accessories:
   -- #5-222 corner bumpers.
   -- Foot pedal floor lock.
   -- Digital thermometer.
   -- Laminate finish to match Serving Counter.
   -- Modified low profile evaporator center down duct.

**ITEM #51: MENU BOARD -- (N.I.C. - FURNISHED BY OWNER)**

QUANTITY: Two (2)

**ITEM #52: SHELVING, MOBILE**

QUANTITY: One (1)
MANUFACTURER: InterMetro Industries Corporation
MODEL NO.: MetroMaxQ (N058)
PERTINENT DATA: Five-Tier High, Free-Standing, Polymer
UTILITIES REQ'D: ----
ALTERNATE MFRS.: Eagle Group

Furnish and set-in-place per Equipment Plan, Sheet K-101; Manufacturer's Instructions and the following:

1. One (1) #MQ1836G section; 18" W x 36" L x 5-tier high.

2. Four (4) #MQ74UPE posts for stem casters, 73-3/16" high.

3. Two (2) #5MPX polyurethane swivel casters with bumpers.

4. Two (2) #5MPBX polyurethane swivel casters with brakes and bumpers.

NOT FOR BIDDING

**ITEM #52: (Continued)**

5. Plastic wedge lock connectors, quantity as required.

6. Locate bottom shelf @ 12" A.F.F.; space remaining shelves equally.

**ITEM #53: WASHER -- (N.I.C. – FURNISHED BY OWNER)**

QUANTITY: One (1)

**ITEM #54: DRYER -- (N.I.C. – FURNISHED BY OWNER)**

QUANTITY: One (1)

(END OF FOODSERVICE ITEMIZED SPECIFICATIONS)

NOT FOR BIDDING

# STANDARD DETAILS

NOT FOR BIDDING

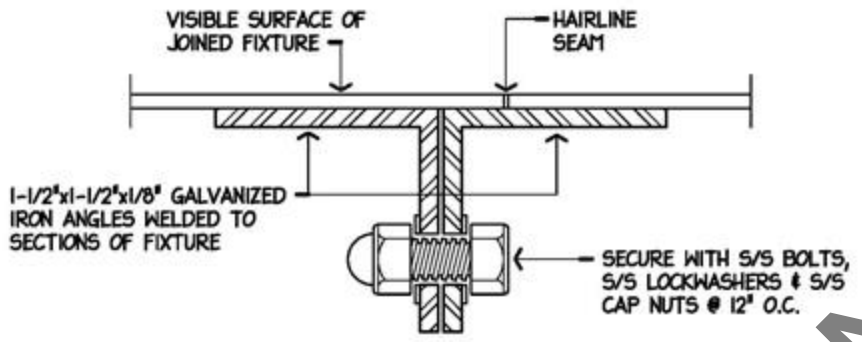


NOTE! JOINED SECTIONS SHALL BE DRAWN TOGETHER LEAVING ONLY A HAIRLINE SEAM.

**A. BOLT DRAWN JOINT**

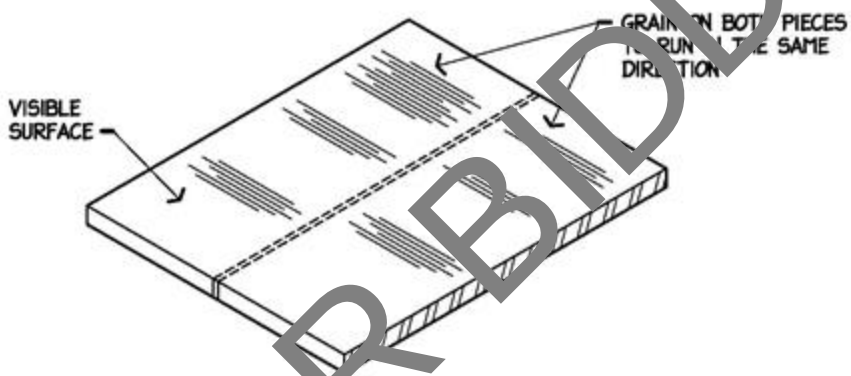


NOTE! ON FIXTURES SPECIFIED WITH WELDED FIELD JOINTS, WELDS SHALL BE CONTINUOUS, GROUND & POLISHED LEAVING NO VISIBLE EVIDENCE OF WELD.

**B. WELDED BUTT JOINT**

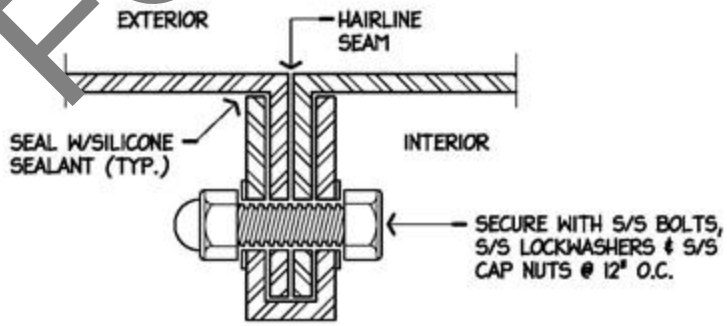


NOTE! JOINED SECTIONS SHALL BE DRAWN TOGETHER LEAVING ONLY A HAIRLINE SEAM.

**C. RAISED CAP SEAM - KNUCKLE JOINT**

| NYIKOS ASSOCIATES, INC. Food Facilities Design/Consulting | DESCRIPTION: FIELD JOINTS & ASSEMBLY | STANDARD DTL: 1.01 |
|---|---|---|

NOT FOR BIDDING

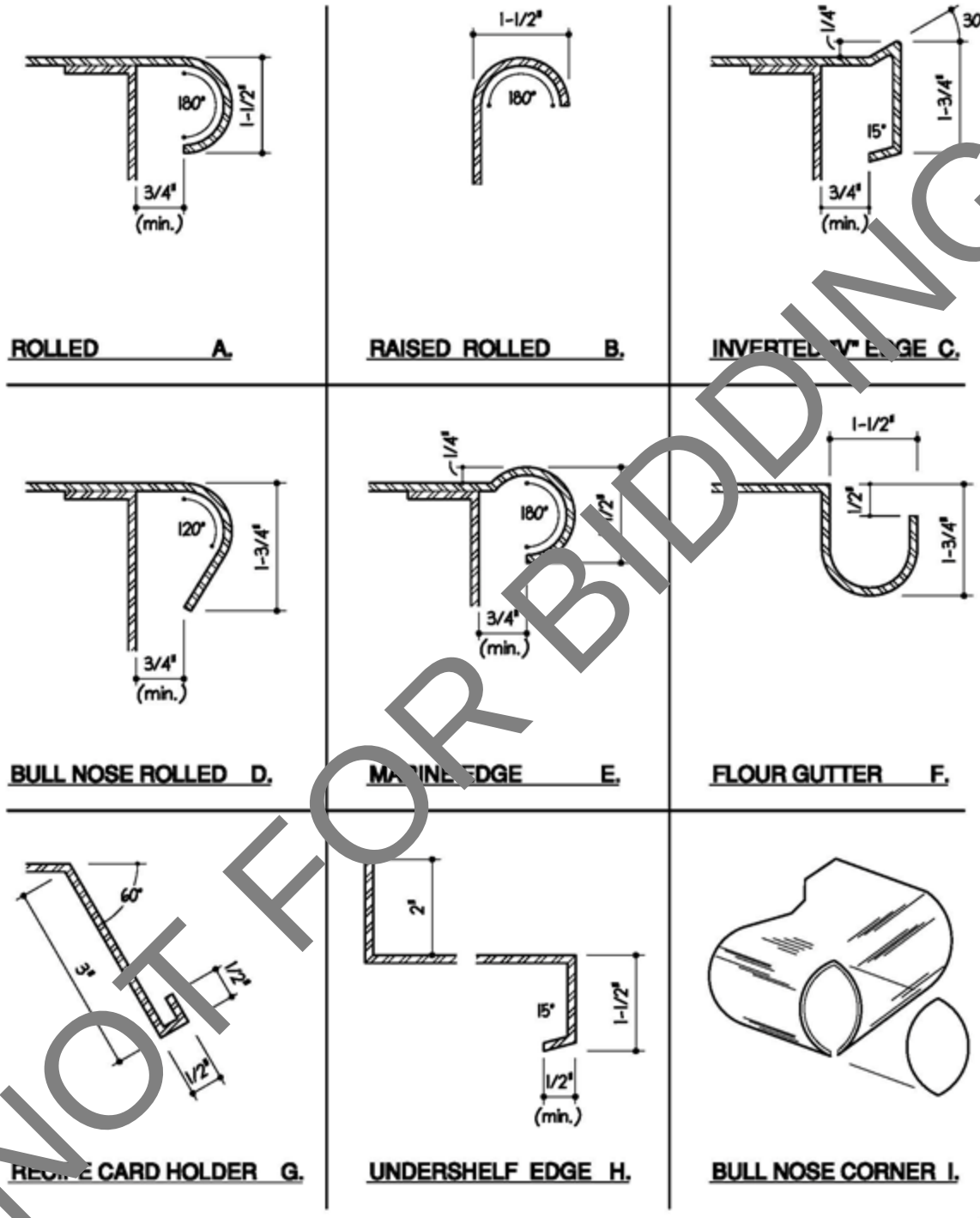


NYIKOS ASSOCIATES, INC.
Food Facilities Design/Consulting

DESCRIPTION: EDGES

STANDARD DTL: 1.02

NOT FOR BIDDING

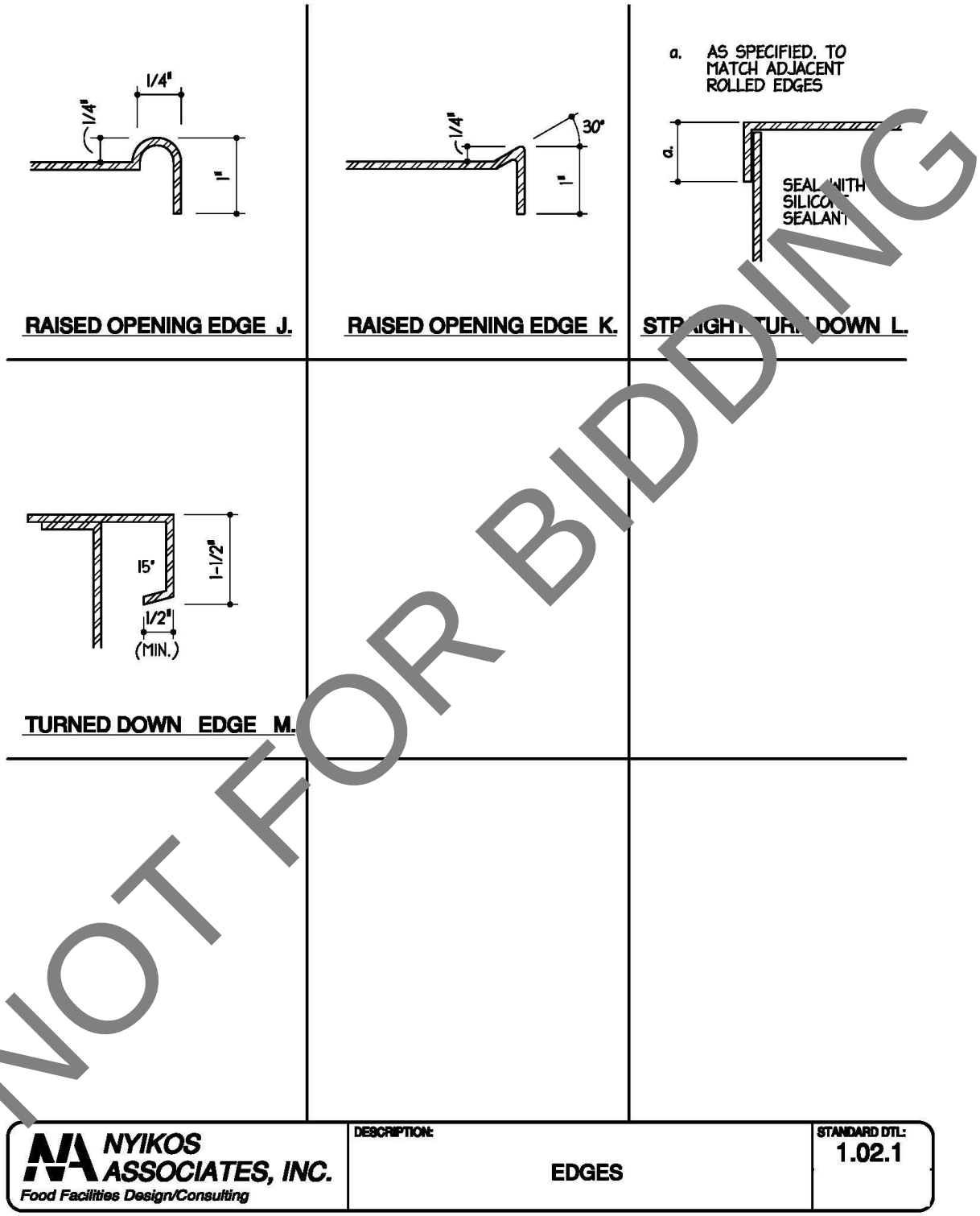


NOT FOR BIDDING

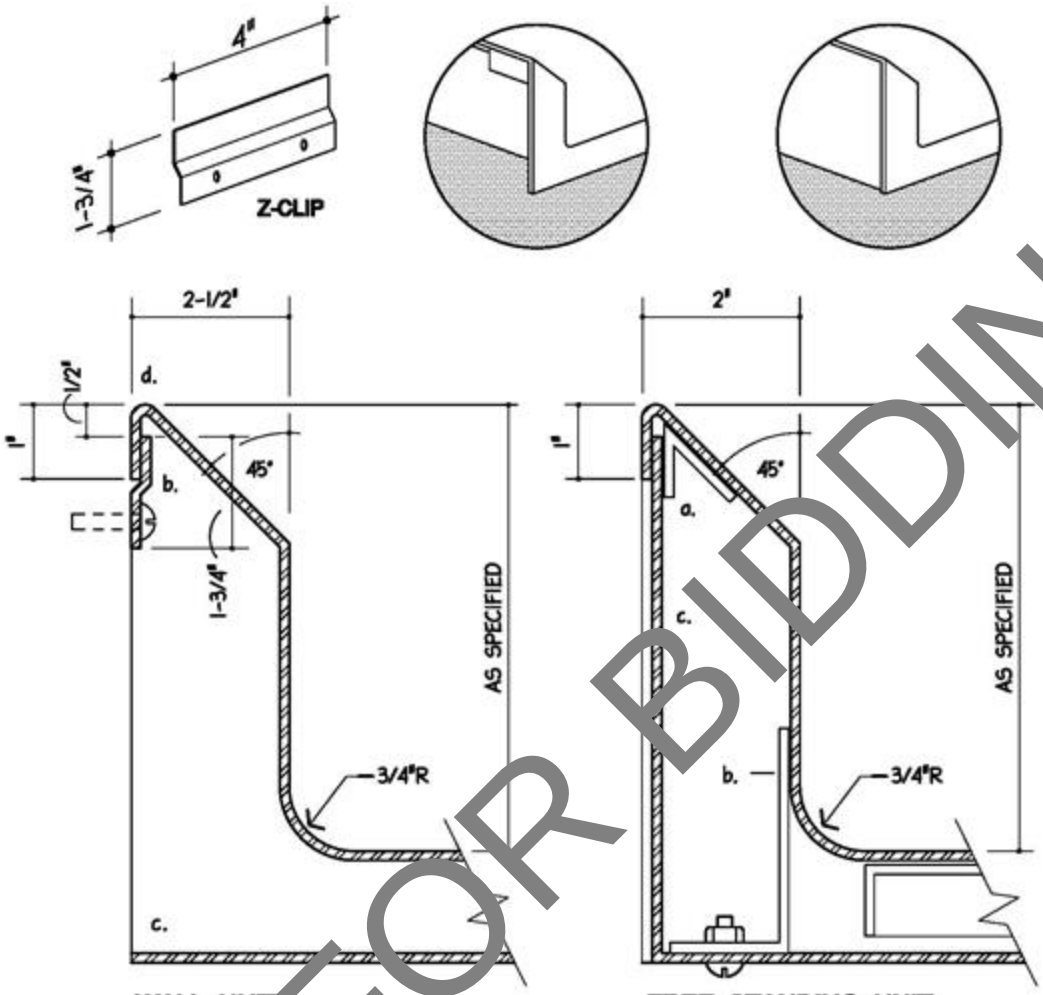


**WALL UNIT**

**DETAIL A**

a. 2-1/2" AT SINK TO ALLOW FOR CONNECTED OVERFLOW

b. 12 GA. S/S CLIPS, 4" LONG, FASTENED TO EACH WALL END OF EACH UNIT @ 4'-0" ON CENTER. SECURE TO WALL W/A MINIMUM OF TWO 1/4"x20 S/S TOGGLE BOLTS OR EXPANSION SHIELDS.

c. EXPOSED ENDS TO BE FULLY WELDED CLOSED.

d. SEAL ALL AROUND TO WALL WITH SILICONE SEALANT.

**FREE STANDING UNIT**

**DETAIL B**

a. 1"x1"x14 GA. S/S x1-1/2"LONG RETAINING CLIP WELDED IN PLACE. ONE AT EACH END OF UNIT AND 12" ON CENTER.

b. 2-1/2"x1-1/2x1-1/2" 14 GA.S/S CLIP WELDED TO SPLASH. ONE AT OF EACH UNIT @ 12" ON CENTER.

c. 14 GA S/S PANEL SECURED TO CLIPS W/ S/S OVALHEAD BOLT. WELD NUT TO CLIP.

d. EXPOSED ENDS TO BE FULLY WELDED.

| NYIKOS ASSOCIATES, INC. Food Facilities Design/Consulting | DESCRIPTION: BACKSPLASHES | STANDARD DTL: 1.04 |
|---|---|---|

NOT FOR BIDDING

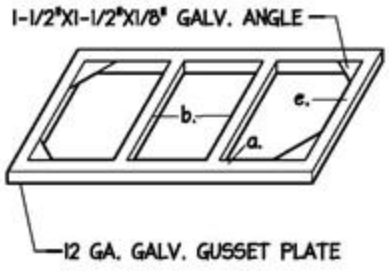


TABLES

A.

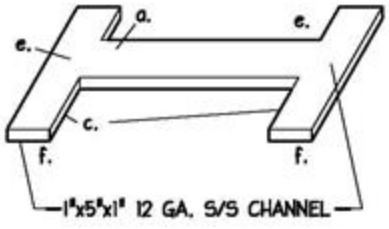


DISHTABLES

B.

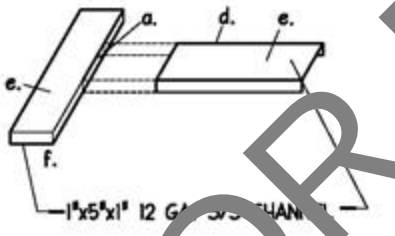


SINK DRAINBOARDS

C.

a. FULLY WELDED CONSTRUCTION.

b. ANGLE LOCATION - ENDS; SIDES OF TOP INSETS; INTERMEDIATES 2' ON CENTER.

c. CHANNEL LOCATION - ENDS AND INTERMEDIATE MAXIMUM 6'-6" O.C.

d. ADD CENTER CHANNEL WHEN DRAINBOARD LENGHT EXCEEDS 5'-6".

e. SECURE TOP TO FRAMEWORK WITH WELDED STUDS, S/S LOCKWASHERS AND CAP NUTS.

f. CLOSE CHANNEL AT FRONT ONLY.

| NYIKOS ASSOCIATES, INC. Food Facilities Design/Consulting | DESCRIPTION: TABLE & DRAINBOARD FRAMEWORK | STANDARD DTL: 1.05 |
|---|---|---|

NOT FOR BIDDING

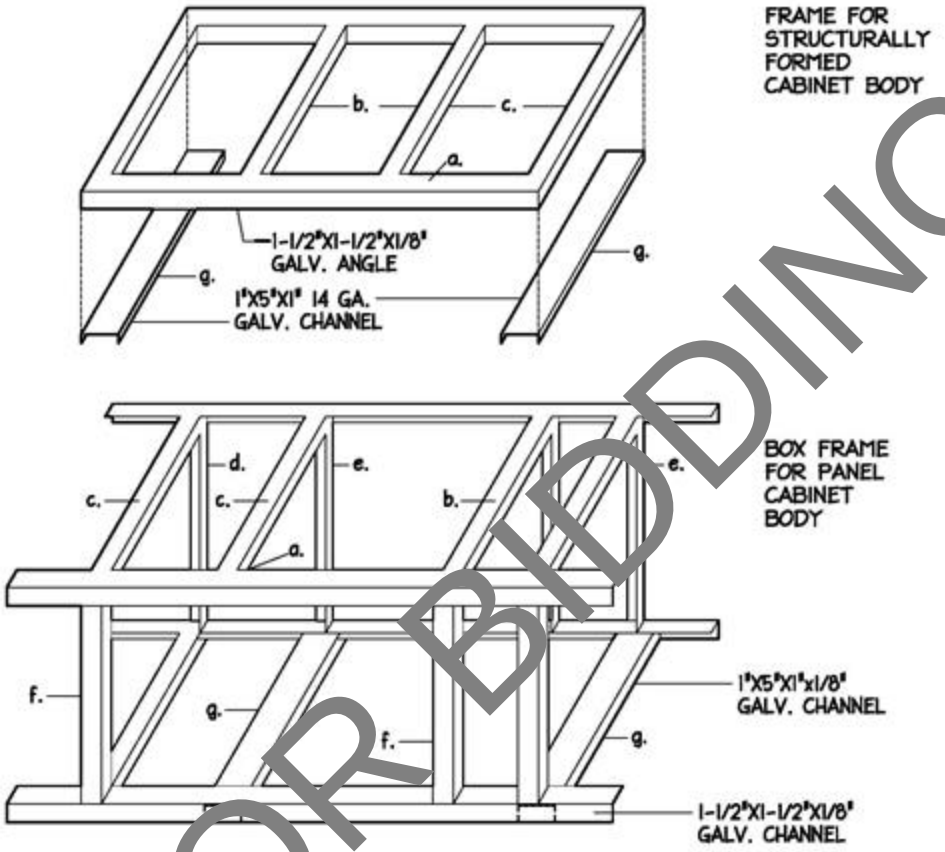


a. FULLY WELDED CONSTRUCTION.

b. SECURE TOP TO FRAMEWORK WITH WELDED STUDS, S/S LOCKWASHERS, AND CAP UNITS. MAXIMUM 18" ON CENTER.

c. TOP ANGLE LOCATION - ENDS; SIDES OF TOP INSETS; UNDER HEAVY EQUIPMENT LEGS; INTERMEDIATES 24" ON CENTER.

d. BACK ANGLE LOCATION - ENDS; INTERMEDIATE MAXIMUM 5'-6" ON CENTER.

e. CAFETERIA FRONT ANGLE (CHANNEL) LOCATION - ENDS; INTERMEDIATES TO CORRESPOND TO PILASTERS, SLIDE BRACKETS, PANEL SPACING, MAXIMUM 4'-0" ON CENTER. REF: STDS.-4.01 THRU 4.04.

f. WORK SIDE ANGLE LOCATION - ENDS; SIDE OF OPENINGS; INTERMEDIATES MAXIMUM 5'-6" ON CENTER.

g. BOTTOM LEG CHANNEL LOCATION - ENDS; INTERMEDIATES CORRESPOND TO FRONT PANEL SPACING; PILASTERS, SLIDE BRACKETS. MAXIMUM 5'-6" ON CENTER.

| NYIKOS ASSOCIATES, INC. Food Facilities Design/Consulting | DESCRIPTION: COUNTER FRAMEWORK | STANDARD DTL: 1.06 |
|---|---|---|

NOT FOR BIDDING

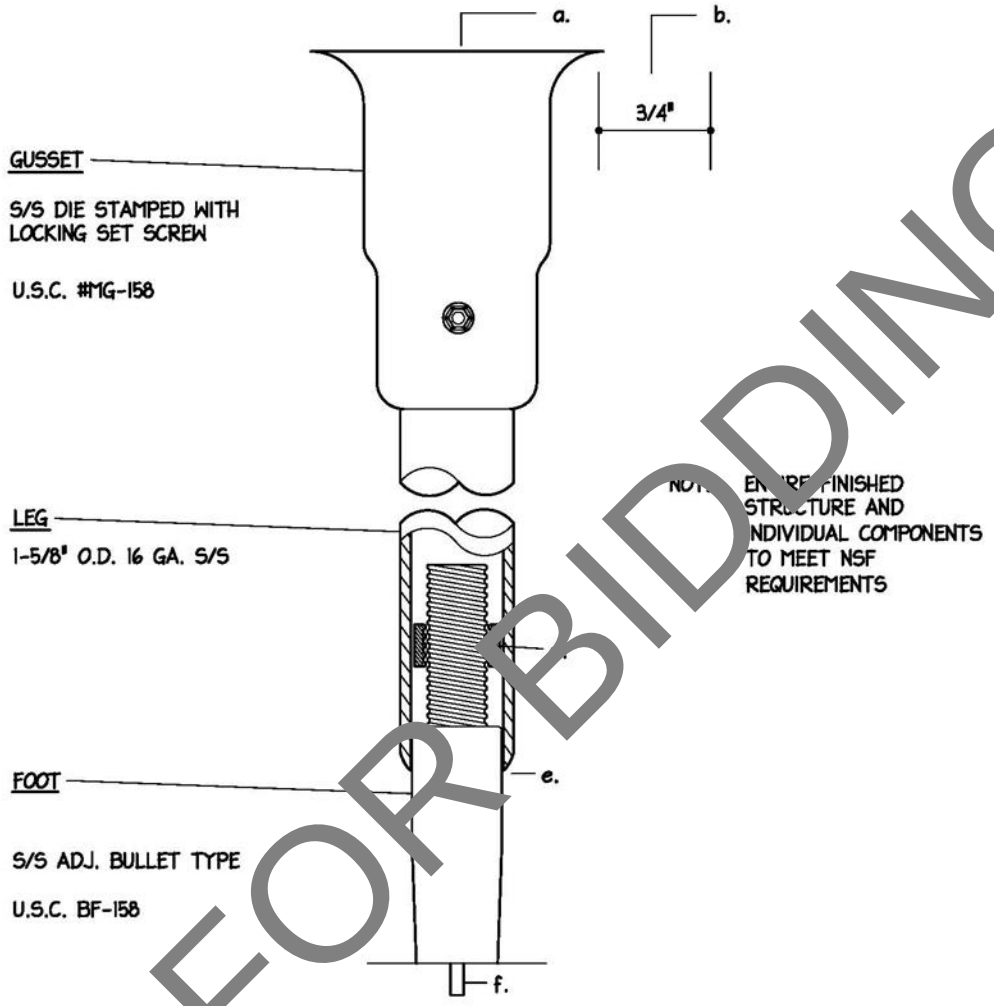


a. FULLY WELD GUSSET TO FRAMEWORK OR SINK
b. 3/4" MINIMUM CLEARANCE ALL AROUND
c. SET SCREW NOT VISIBLE TO WORKING SIDE OF EQUIPMENT.
d. MAXIMUM 1/32" CLEARANCE BETWEEN LEG AND FOOT
e. FOOT SET AT MIDPOINT TO ALLOW 1" ADJUSTMENT UP AND 1" DOWN. WITHOUT THREAD EXPOSURE.
f. LEGS UNSUPPORTED LATERALLY BY CROSSBACKING OR UNDERSHELVES SHALL BE PINNED TO FLOOR USING 1/4" DIA. X 1/2" PINS WELDED TO FOOT AND SET IN MATCHING HOLES IN THE FLOOR.

| NYIKOS ASSOCIATES, INC. Food Facilities Design/Consulting | DESCRIPTION: TABLE & SINK LEGS | STANDARD DTL: 1.07 |
|---|---|---|

NOT FOR BIDDING

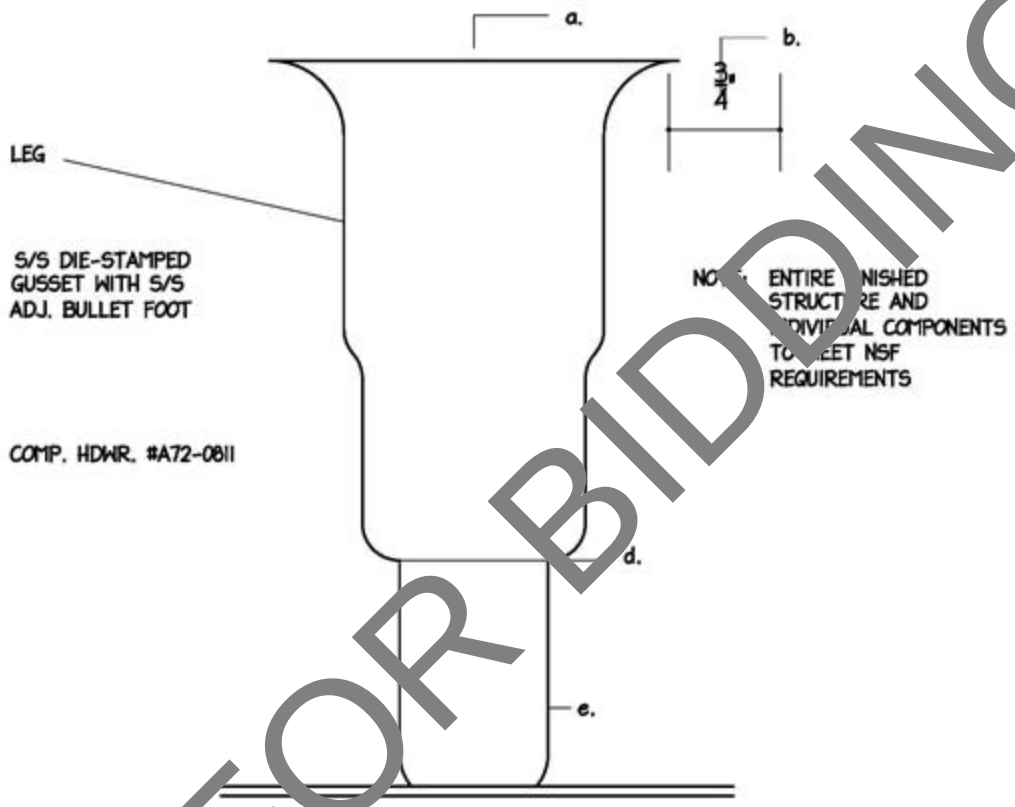


a. FULLY WELD TO FRAMEWORK CHANNEL

b. 3/4" MINIMUM CLEARANCE ALL AROUND

d. MAXIMUM 1/32" CLEARANCE BETWEEN LEG AND FOOT

e. FOOT SET AT MIDPOINT TO ALLOW 1" ADJUSTMENT UP AND 1" DOWN. WITHOUT THREAD EXPOSURE.

| NYIKOS ASSOCIATES, INC. Food Facilities Design/Consulting | DESCRIPTION: COUNTER LEGS | STANDARD DTL: 1.08 |
|---|---|---|

NOT FOR BIDDING

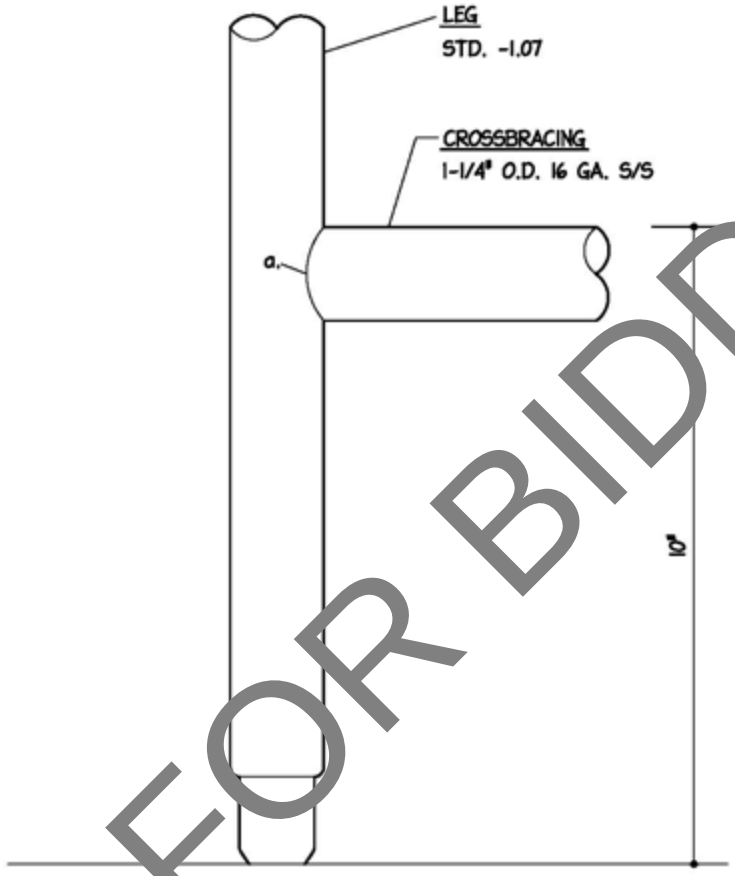


a. FULLY WELD, GRIND SMOOTH AND POLISH.

NOT FOR BIDDING

| NYIKOS ASSOCIATES, INC. Food Facilities Design/Consulting | DESCRIPTION: CROSSBRACING | STANDARD DTL: 1.10 |
|---|---|---|

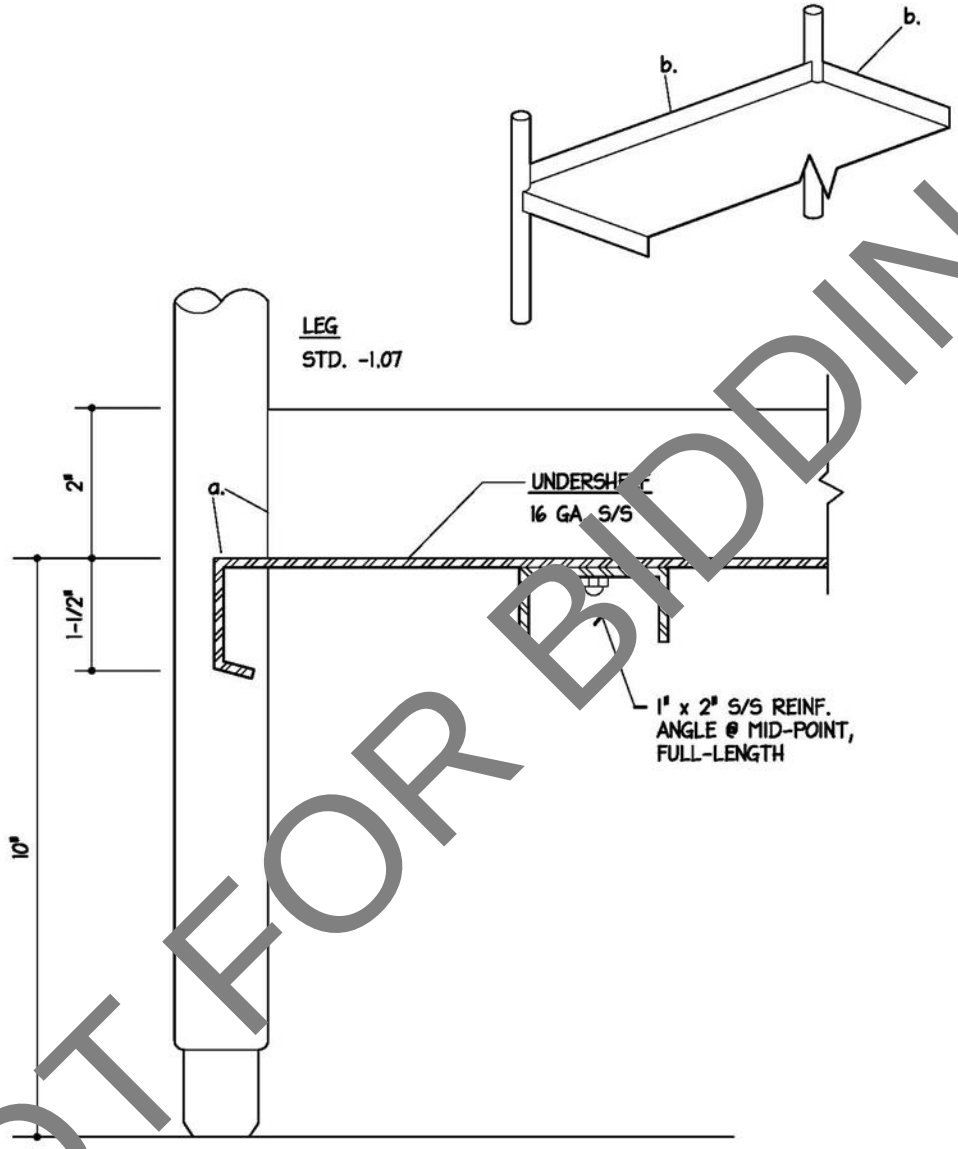


a. FULLY WELD, GRIND SMOOTH AND POLISH.

b. WHEN SPECIFIED, TURN REAR AND ENDS UP 2".

NOT FOR BIDDING

| NYIKOS ASSOCIATES, INC. Food Facilities Design/Consulting | DESCRIPTION: UNDERSHELF | STANDARD DTL: 1.11 |
|---|---|---|

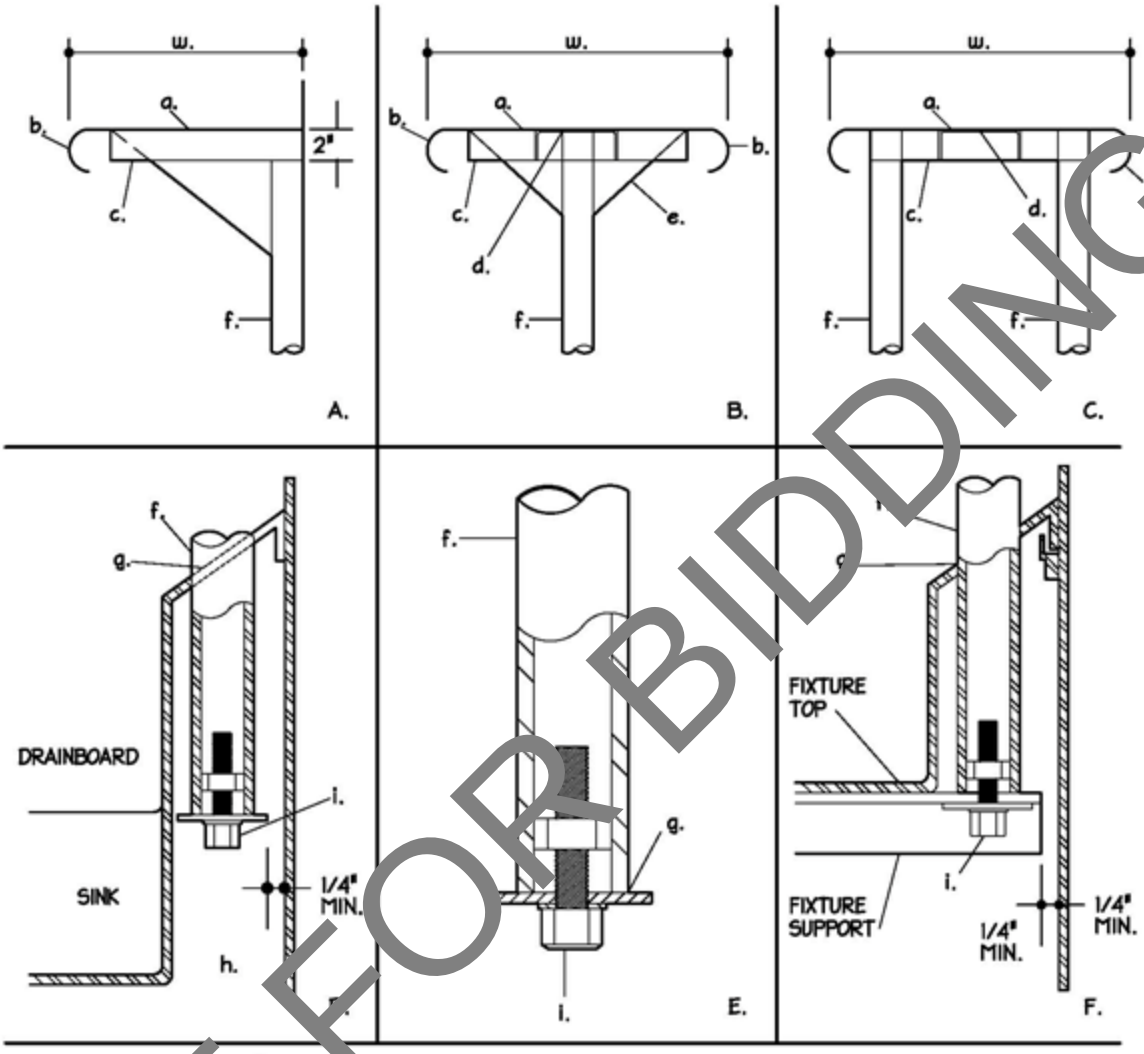


16 GA S/S SHELF
b. STD.- 1.02 EDGE
c. 1-1/3"x 1" 14 GA. S/S CROSS CHANEL
d. 1"x 3"x 1" 14 GA. S/S LENGTHWISE CHANNEL WHEN LENGTH BETWEEN SUPPORTS EXCEEDS 42"
14 GA. S/S BRACKETS FULLY WELDED TO SUPPORT AND CHANNEL..
. 1-1/4" O.D. 16 GA. S/S UPRIGHT. MAXIMUM 5'-0" ON CENTER.
g. TIGHT FIT. SEAL WITH SILICONE SEALANT.
h. 1-1/2"x 1-1/2" 12 GA. S/S CLIPS WELDED TO REAR OF SPLASH AT DRAINBOARD HEIGHT.
i. 3/8"x 16 S.S. HEX HEAD BOLT, S/S NUT & S/S LOCKWASHER. NUT WELDED IN TUBE.
w. WIDTH AS SPECIFIED.

| NYIKOS ASSOCIATES, INC. Food Facilities Design/Consulting | DESCRIPTION: OVERSHELVES & SUPPORTS | STANDARD DTL: 1.12 |
|---|---|---|

NOT FOR BIDDING

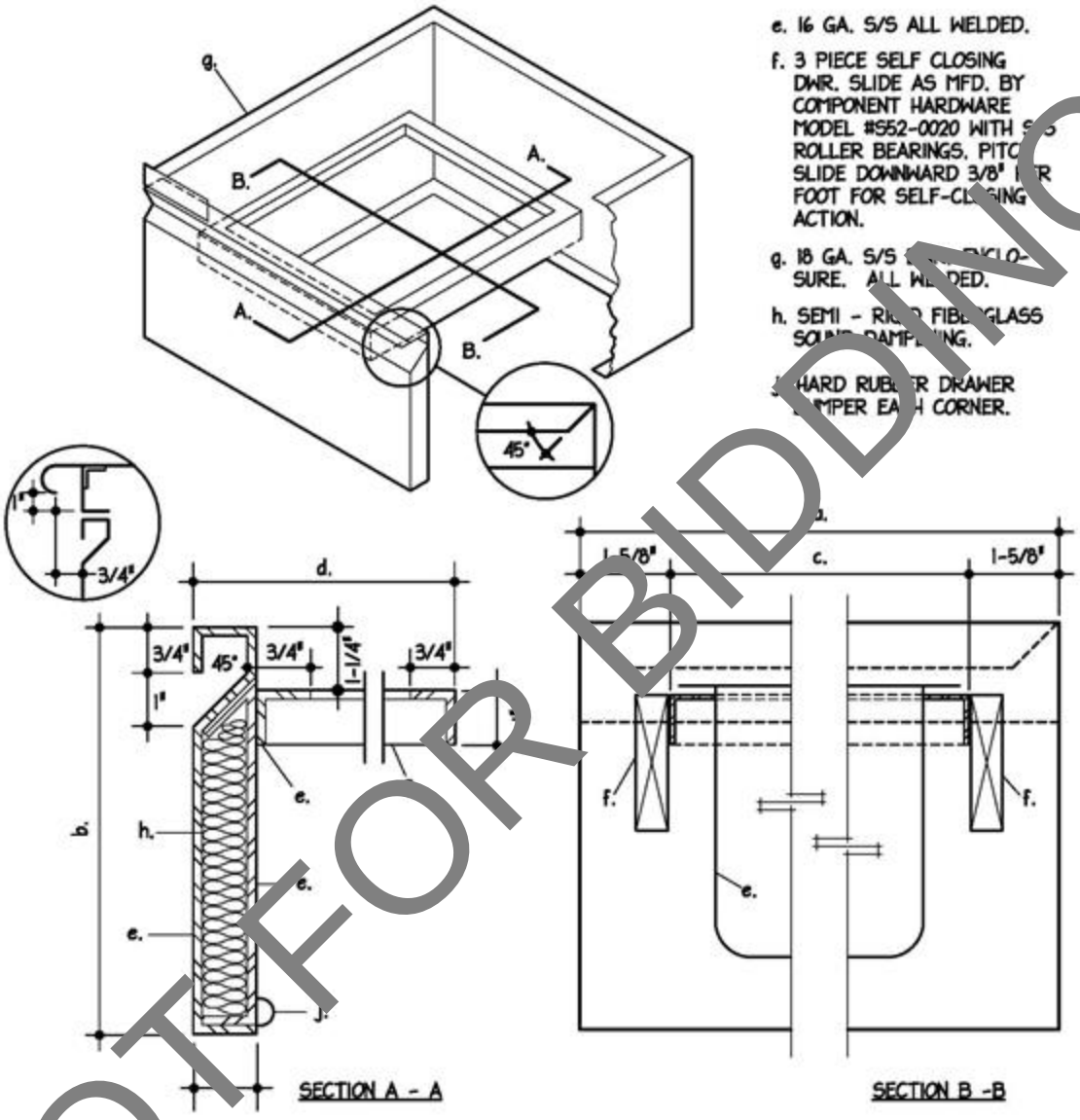


i. PROVIDE DIE - STAMPED #18 GA. S/S DWR. PANS AS FOLLOWS:

| TYPE | NO. | PANS | a. | b. | c. | d. |
|---|---|---|---|---|---|---|
| I | 1 | 20x20x5 DP. | 25 | 7-1/2 | 21-3/4 | 22-3/4 |
| II | 1 | 20x20x8 DP. | 25 | 10-1/2 | 21-3/4 | 22-3/4 |
| III | 1 | 12x20x4 DP. | 25 | 6-1/2 | 21-3/4 | 14-1/2 |
| IV | 2 | 12x20x4 DP. | 28 | 6-1/2 | 26-1/4 | 22-1/2 |
| V | 1 | 12x20x4 DP. | 17 | 13-1/2 | 13-1/2 | 22-1/2 |

NYIKOS ASSOCIATES, INC.
Food Facilities Design/Consulting

DESCRIPTION: DRAWERS

STANDARD DTL: 1.14

NOT FOR BIDDING

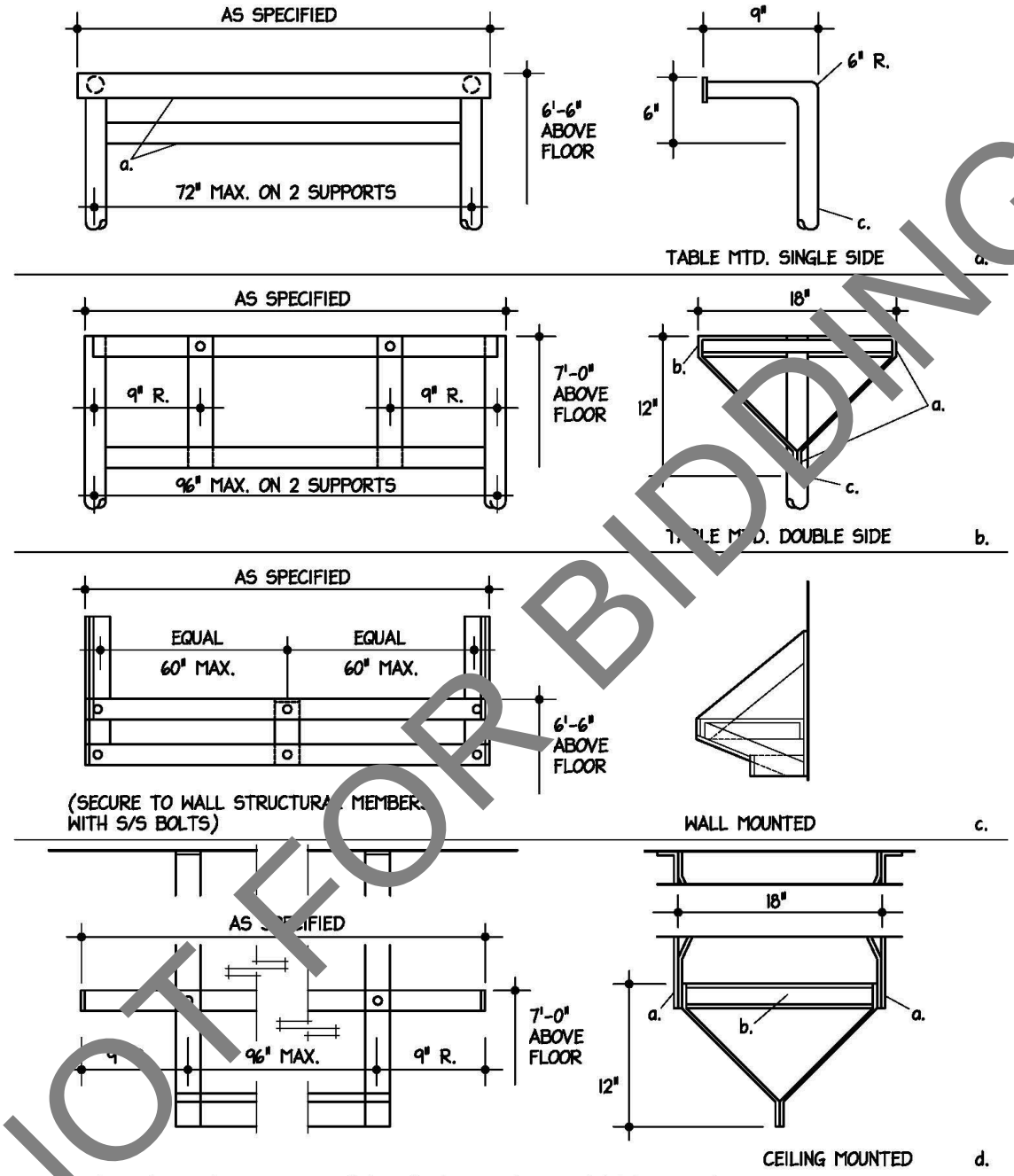


RACKS TO BE ALL WELDED CONSTRUCTION, GROUND SMOOTH AND POLISHED

a. BANDS - 1/4"x2 S/S BAR.
b. SPREADERS - 1" O.D. 16 GA. S/S.
c. UPRIGHTS - 1-5/8" O.D. 16 GA. S/S.
d. HOOKS - S/S DOUBLE PRONG SNAP-OVER STANDARD KEIL - #1576-1010-1351, 6" O/C.

| NYIKOS ASSOCIATES, INC. Food Facilities Design/Consulting | DESCRIPTION: POT RACKS | STANDARD DTL: 1.18 |
|---|---|---|

NOT FOR BIDDING

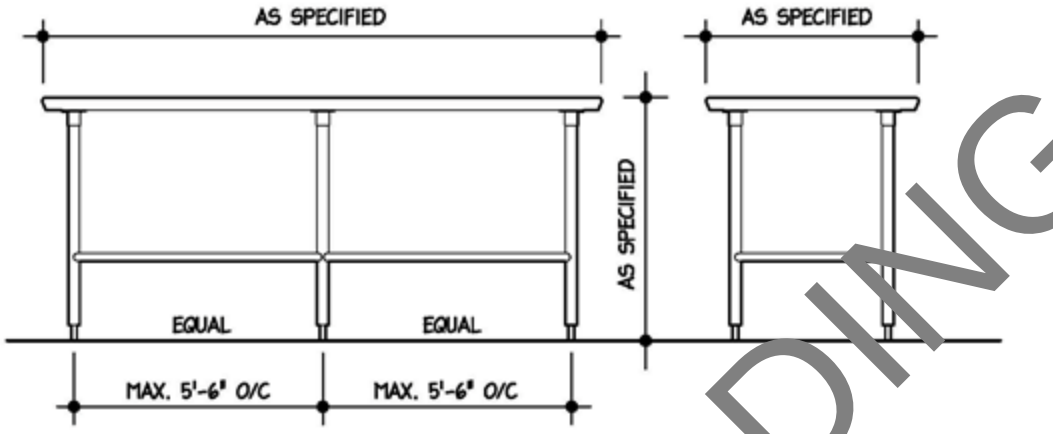


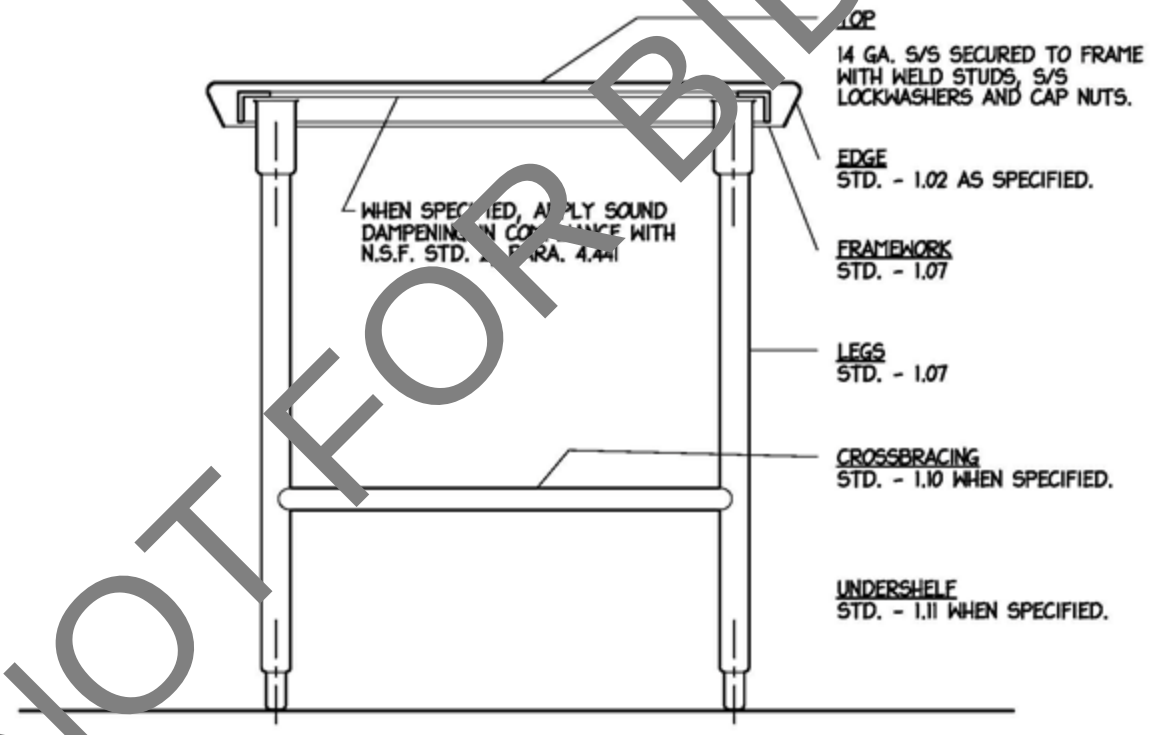


NOT FOR BIDDING

| NYIKOS ASSOCIATES, INC. Food Facilities Design/Consulting | DESCRIPTION: WORKTABLE | STANDARD DTL: 2.01 |
|---|---|---|

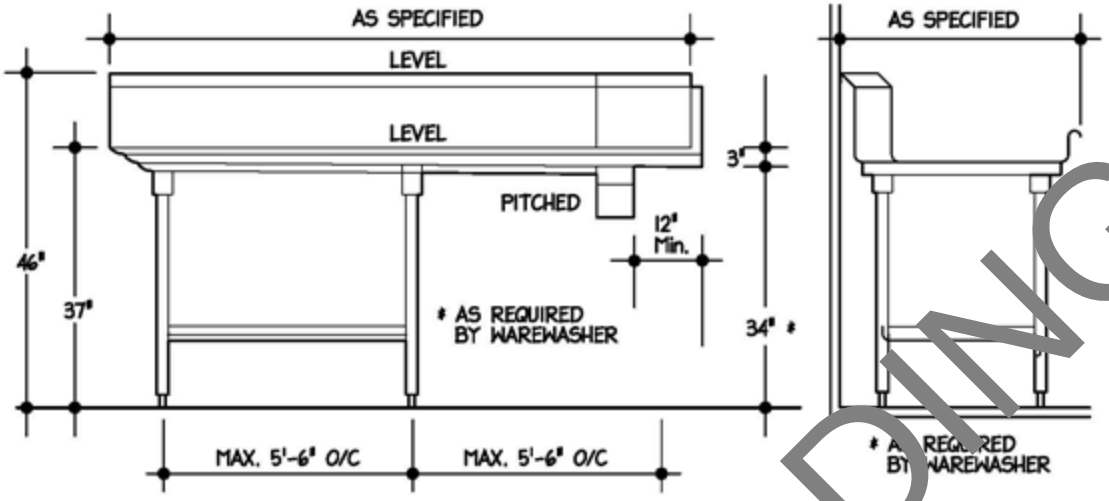


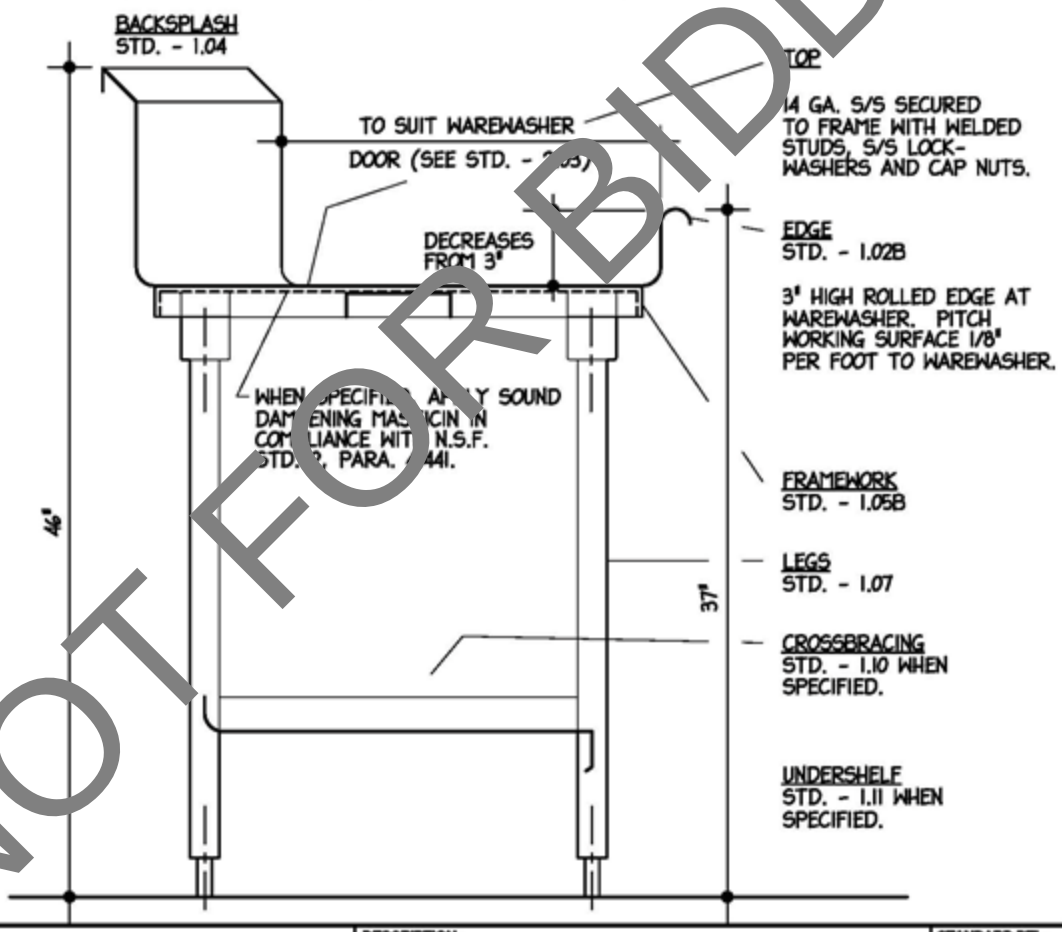


NYIKOS ASSOCIATES, INC.
Food Facilities Design/Consulting

DESCRIPTION: DISHTABLE

STANDARD DTL: 2.02

NOT FOR BIDDING

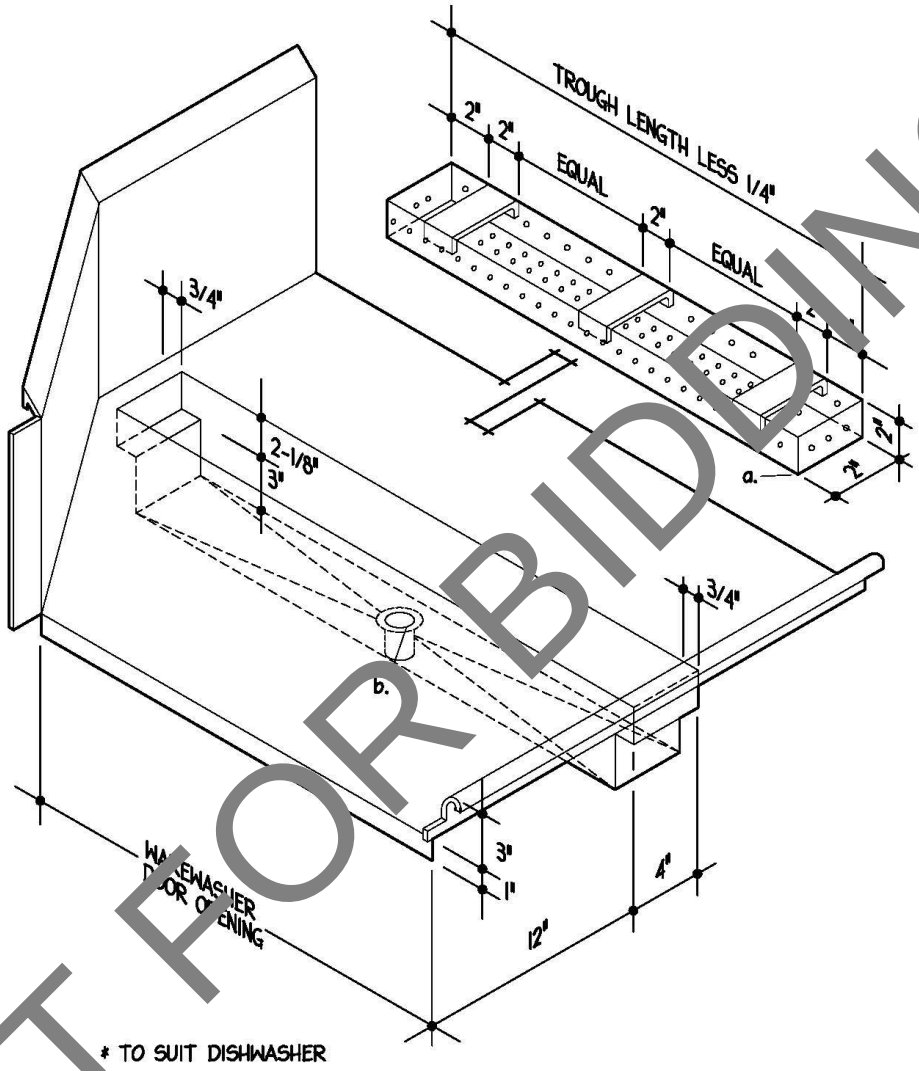


a. BASKET - 16 GA. PERFORATED S/S, ALL WELDED CONSTRUCTION.
b. WASTE - 1-1/2" CHROME PLATED BRASS DRAIN -- STANDARD-KEIL #1816-1812-1368

| NYIKOS ASSOCIATES, INC. Food Facilities Design/Consulting | DESCRIPTION: WAREWASHER CONNECTION AND TABLE TROUGH | STANDARD DTL: 2.03 |
|---|---|---|

NOT FOR BIDDING

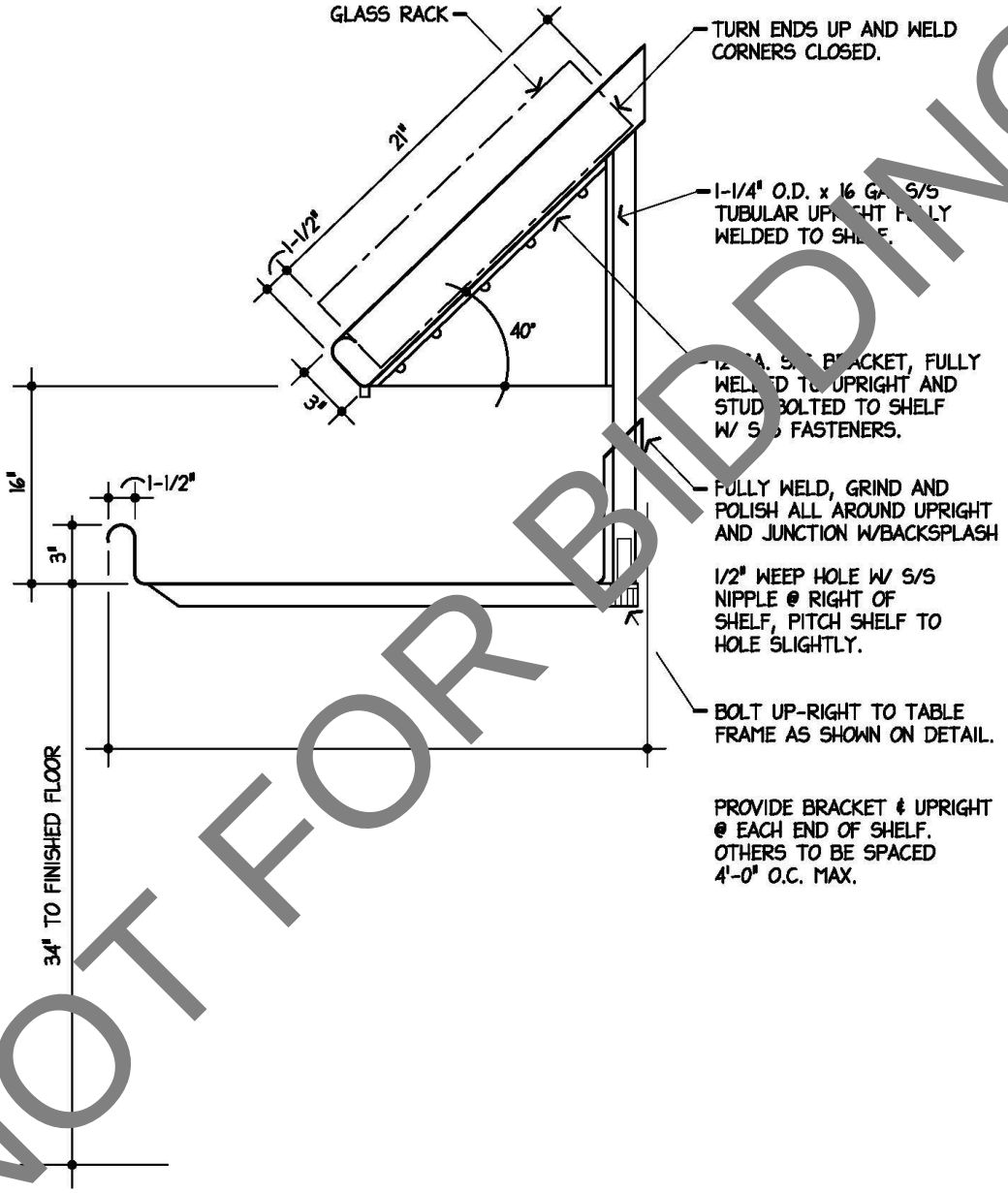


NOT FOR BIDDING

| NYIKOS ASSOCIATES, INC. Food Facilities Design/Consulting | DESCRIPTION: TABLE MOUNTED RACKING SHELF | STANDARD DTL: 2.17 |
|---|---|---|

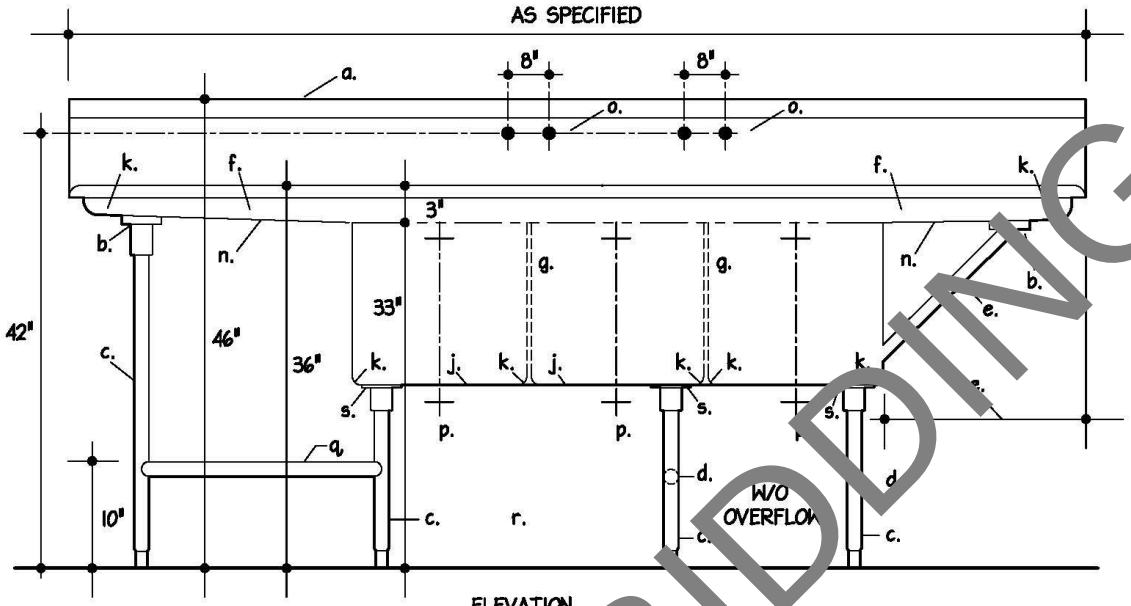


a. MATERIAL - 14 GA. S/S.
b. STD. - 1.05c.
c. STD. - 1.07
d. STD. - 1.10

CONTINUED ON STD.- 3.01.1

NYIKOS ASSOCIATES, INC.
Food Facilities Design/Consulting

DESCRIPTION: SINKS AND DRAINBOARDS

STANDARD DTL: 3.01

NOT FOR BIDDING

e. DRAINBOARDS UP TO 24" IN LENGTH REQUIRE NO LEGS OR BRACES. DRAINBOARDS 25" TO 30" REQUIRE 1" O.D. 16 GA. S/S BRACE. DRAINBOARDS OVER 30" REQUIRE LEGS AND CHANNEL FRAMEWORK.

f. DRAINBOARDS SHALL PITCH TO SINK 1/8" PER FOOT OF LENGTH TO PROVIDE COMPLETE DRAINING WITHOUT POOLING. THE 3" HIGH RAISED ROLLED RIM AT THE SINK SHALL DECREASE IN HEIGHT TOWARD THE OUTER ENDS OF THE DRAINBOARD.

g. PARTITIONS BETWEEN COMPARTMENTS TO BE DOUBLE WALLED CONSTRUCTION WITH ROUNDED TOP, ALL WELDED INTEGRAL WITH SINK BODY.

h. BACK, BOTTOM, AND FRONT SHALL BE ONE CONTINUOUS PIECE WITH ENDS WELDED INTEGRAL, WITHOUT OVERLAPPING JOINTS OR OPEN SPACES, BETWEEN COMPARTMENTS.

i. WASTES SHALL BE SEATED IN DIE STAMPED DEPRESSIONS WITHOUT USE OF SOLDER, RIVETS OR WELDING. INSTALLED COMPONENTS SHALL BE FLUSH WITH SURROUNDING SURFACE.

j. EACH SINK COMPARTMENT TO BE PITCHED AND CREASED TO WASTE TO ASSURE COMPLETE DRAINING WITHOUT POOLING.

k. ENTIRE UNIT SHALL BE ALL WELDED COVE CORNERED CONSTRUCTION WITH VERTICAL AND HORIZONTAL AND INTERIOR CORNERS HAVING 3/4" RADIUS.

l. STD.- 1.02 b EDGE.

m. STD. - 1.04a. BACKSPLASH.

n. UNDERSIDE OF DRAINBOARDS AND SINKS TO BE SPRAYED WITH SOUND DAMPENING IN COMPLIANCE WITH N.S.F. STD. 2 PARA 4.441 WHEN SPECIFIED.

o. FAUCETS - T&S MODEL B-232 WITH AERATOR B-199, REMOVABLE MONEL SEATS AND 1/2" I.P.S. MALE INLETS.

p. WASTES - 2" NICKEL PLATED BRONZE ROTARY HANDLE WASTE S/S STRAINER PLATE WITH CHROME WITH CHROME PLATED BRASS CONNECTED OVERFLOW, STANDARD- KIEL HARDWARE MFG. CO. #1770-1015-1000.

q. REAR CROSS BRACING ONLY.

r. NOT FRONT AND REAR LENGTHWISE CROSSBRACIG UNDER SINKS.

s. 12 GAUGE STAINLESS STEEL 6"x 6" TRIANGULAR SUPPORT PLATE WELDED TO UNDERSIDE OF SINKS.

t. WOTH AS SPECIFIED.

NOT FOR BIDDING

| NYIKOS ASSOCIATES, INC. Food Facilities Design/Consulting | DESCRIPTION: SINK AND DRAINBOARDS | STANDARD DTL: 3.01.1 |
|---|---|---|

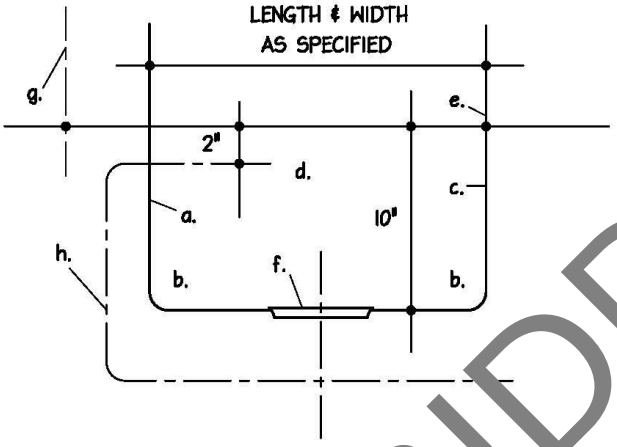


TYPICAL SECTION

a. MATERIAL - 14 GA. S/S

b. ENTIRE UNIT SHALL BE ALL WELDED COVE CORNERED CONSTRUCTION WITH VERTICAL AND HORIZONTAL AND INTERIOR CORNERS HAVING A 3/4" RADIUS.

c. TWO SIDES AND BOTTOM SHALL BE ONE CONTINUOUS PIECE WITH ENDS WELDED INTEGRAL WITHOUT OVERLAPPING JOINTS.

d. PARTITIONS BETWEEN COMPARTMENTS TO BE DOUBLE WALLED CONSTRUCTION WITH ROUNDED TOP, ALL WELDED INTEGRAL WITH SINK.

e. FULLY WELD SINK TO TOP WITHOUT OVERLAPPING JOINTS.

f. WASTES SHALL BE SEATED IN DIE STAMPED DEPRESSIONS WITHUOT USE OF SOLDER RIVETS OR WELDING . INSTALLED COMPONENTS SHALL BE FLUSH WITH SURROUNDING SURFACE.

g. FAUCET - T&S MODEL B-222 FAUCET WITH B-199 AERATOR, REMOVABLE MONEL SEATS AND 1/2" IPS MALE INLETS.

h. WASTES - 1-1/2" NICKEL PLATED BRONZE ROTARY HANDLE WASTE AND S/S STRAINER PLATE WITH CHROME PLATED BRASS CONNECTED OVERFLOW, STANDARD-KEIL HARDWARE COMPANY NO. #1770-1015-1000.

| NYIKOS ASSOCIATES, INC. Food Facilities Design/Consulting | DESCRIPTION: COUNTER TOP SINKS | STANDARD DTL: 3.04 |
|---|---|---|

NOT FOR BIDDING

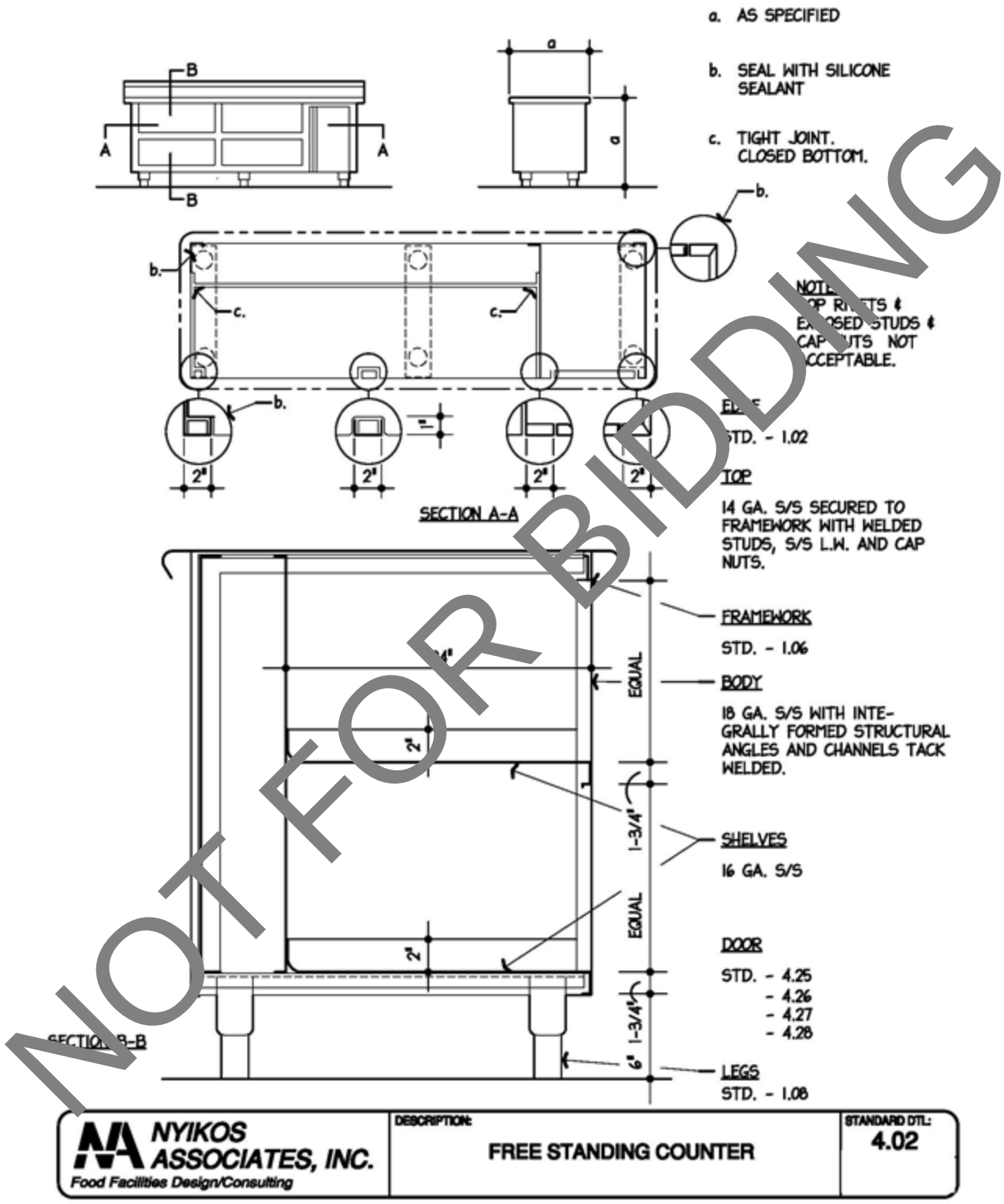


NOT FOR BIDDING

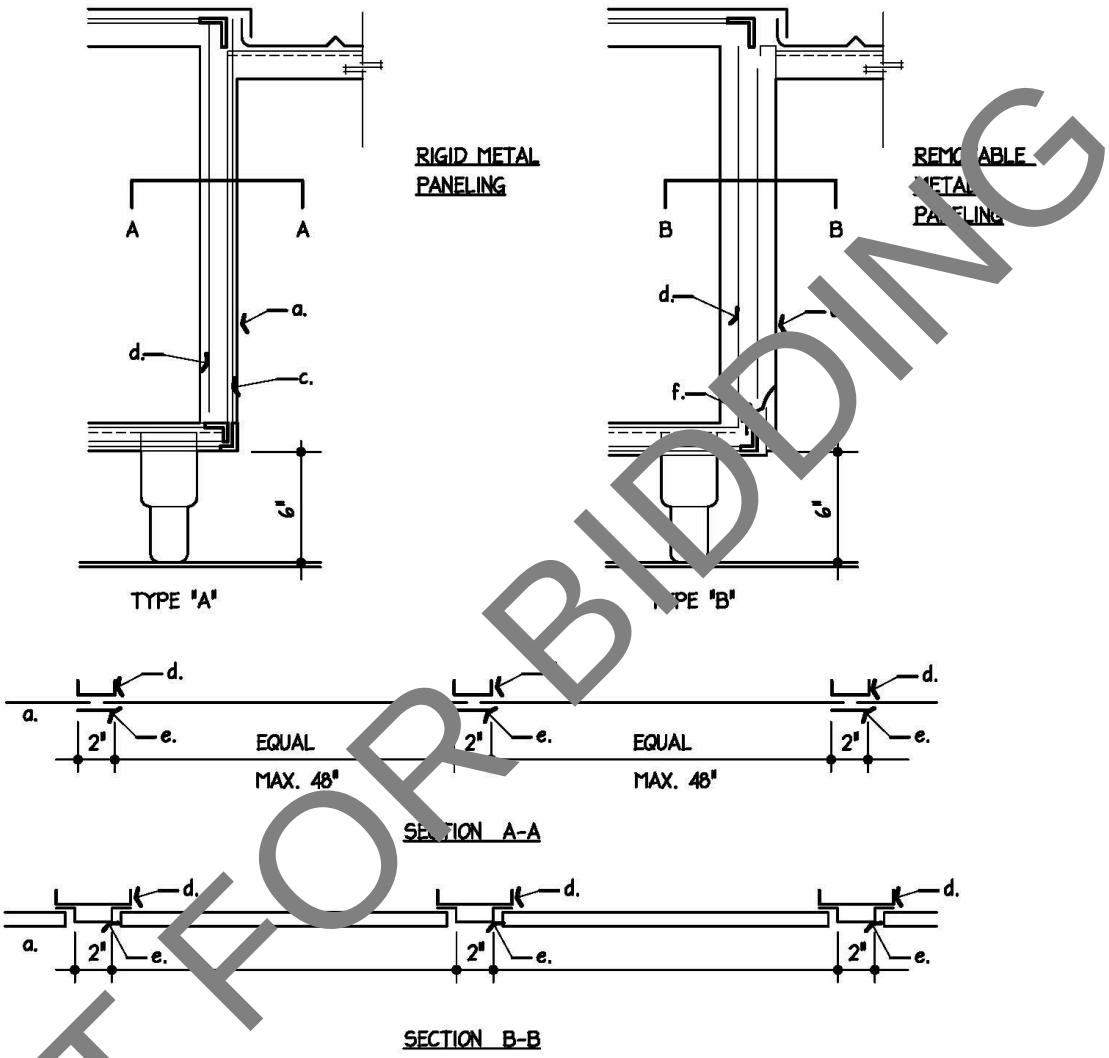


a. PANELING - 18 GA. S/S (18 GA. GALV. W/BONDED COVERING WHEN SPECIFIED).
b. 1"x2"x1" 14 GA. GALV. CHANNEL FULLY WELDED TO FRAMEWORK.
c. " 12 GA. S/S MULLIONS SECURED WITH WELDED STUDS, S/S LOCKWASHERS AND CAP NUTS.
d. 1"x4"x1" 14 GA. GALV. CHANNEL FULLY WELDED TO FRAMEWORK.
e. 1"x1"x2"x1"x1" 14 GA. S/S HAT CHANNEL (MULLIONS) SECURED WITH WELDED STUDS, S/S LOCKWASHERS AND CAP NUTS.
f. S/S CLIP.

| NYIKOS ASSOCIATES, INC. Food Facilities Design/Consulting | DESCRIPTION: CAFETERIA COUNTER FRONT PANELING METAL | STANDARD DTL: 4.05 |
|---|---|---|

NOT FOR BIDDING

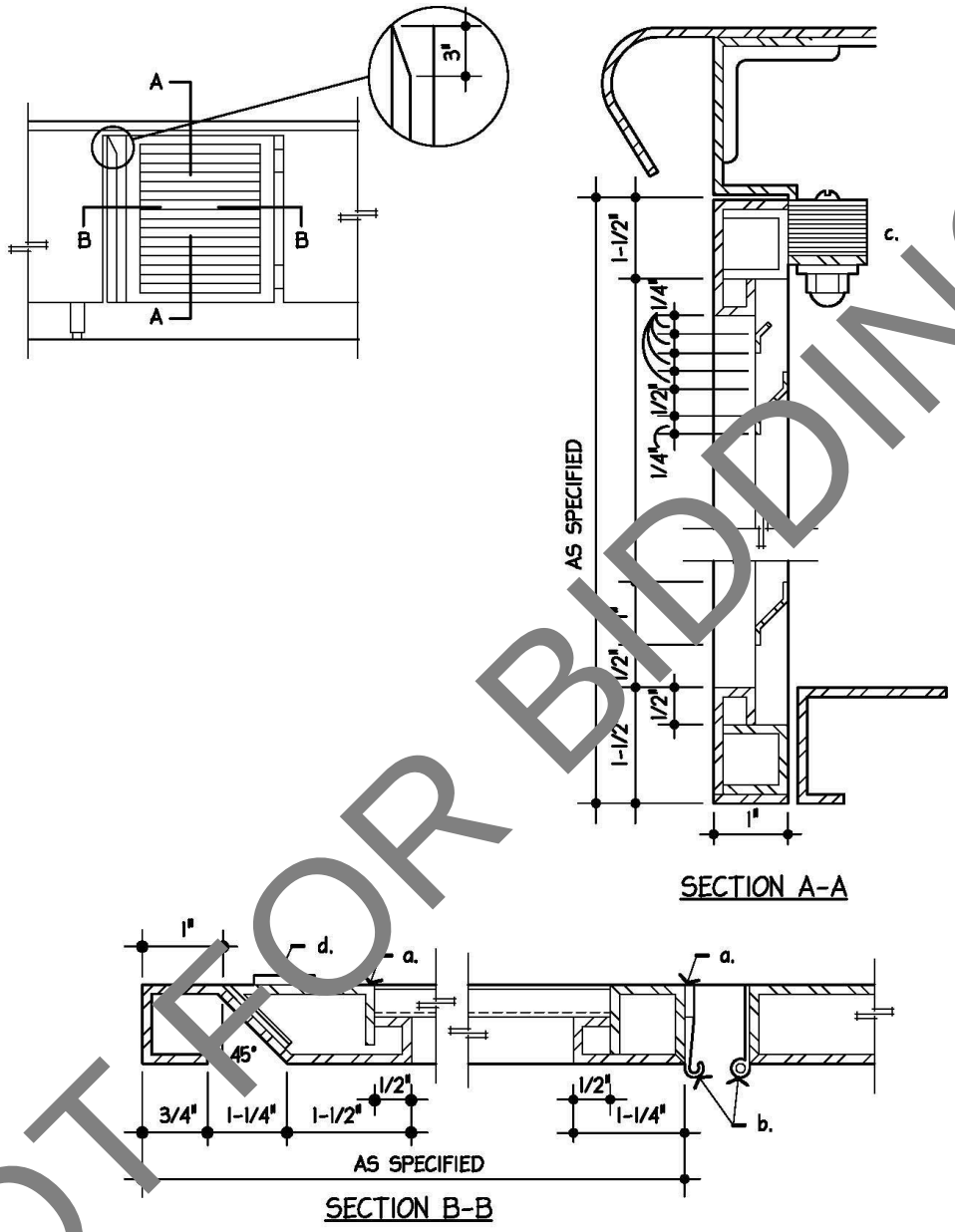


a. 18 GA. S/S GA. 18 GA. S/S EXTERIOR AND INTERIOR PANS TACK WELDED.
b. HEAVY-DUTY S/S CLIP JOINT HINGE AS MFD. BY KEELAN HARDWARE. SET IN FLUSH WITH SURFACE OF DOOR AND JAMB AND WELDED IN PLACE. RE: STD. - 4.26.
c. STANDARD-KEIL #2932-1010-3000 MAGNETIC CATCH MOUNTED FLUSH IN CUT OUT ON 1" TURN DOWN.
d. STEEL PLATE FOR MAGNETIC CATCH TACK WELDED TO INTERIOR DOOR PAN.

| NYIKOS ASSOCIATES, INC. Food Facilities Design/Consulting | DESCRIPTION: HINGED LOUVERED DOORS | STANDARD DTL: 4.27 |
|---|---|---|

**(END OF SECTION 114000)**

NOT FOR BIDDING

# SECTION 115213
# PROJECTION SCREENS

## PART 1 GENERAL

1.01 SECTION INCLUDES

A. Front projection screen assemblies and related work.

1.02 RELATED REQUIREMENTS

A. Section 055000 - Metal Fabrications: Supports for suspended projection screens.

B. Section 061000 - Rough Carpentry: Wood blocking in walls and ceilings.

C. Section 092116 - Gypsum Board Assemblies: Suspended gypsum board ceilings for recessed screens, and openings in gypsum board partitions for projection screens.

D. Div 26 - Equipment Wiring: Electrical supply, conduit, and wiring for electric motor operated projection screens.

1.03 SUBMITTALS

A. Product Data: Manufacturer's catalog cuts and descriptive information on each product to be used, including:
   1. Preparation instructions and recommendations.
   2. Storage and handling requirements and recommendations.
   3. Installation methods.
   4. Wiring diagrams for motor operators and actuators, and controls and switches.

B. Shop Drawings: For custom installations, indicate dimensions, verified field measurements, mounting details, and interface with adjacent construction.

C. Manufacturer's Qualification Statement.

D. Installer's Qualification Statement.

E. Operation and Maintenance Data: Provide manufacturer's operation and maintenance instructions.

F. Warranty: Submit manufacturer warranty and ensure that forms have been completed in Owner's name and registered with manufacturer.

1.04 QUALITY ASSURANCE

A. Manufacturer Qualifications: Company specializing in manufacturing products specified in this section, with not less than five years of documented experience.

B. Installer Qualifications: Company specializing in performing work of the type specified and with at least three years of documented experience.

1.05 DELIVERY, STORAGE, AND HANDLING

A. Deliver projection screens to project site in manufacturer's original unopened packaging, and inspect for damage and proper size before accepting delivery.

B. Store in a protected, clean, dry area with temperature maintained above 50 degrees F, and stack in accordance with manufacturer's recommendations.

C. Acclimate screens to building temperatures for 24 hours prior to installation, in accordance with manufacturer's recommendations.

1.06 FIELD CONDITIONS

A. Maintain interior of building between 60 degrees F and 75 degrees F during and after installation of projection screens.

NOT FOR BIDDING

1.07 WARRANTY

A. Provide one year manufacturer warranty for projection screen assembly, projection screen fabric, rigid projection screen, projection screen motor and related components.

**PART 2 PRODUCTS**

2.01 MANUFACTURERS

A. Provide products manufactured under each projection screen type.

B. Substitutions: See Section 016000 - Product Requirements.

2.02 FRONT PROJECTION SCREENS, ELECTRICALLY OPERATED - TYPE P-1

A. General: Provide manufacturer's standard UL-listed and marked units consisting of case, screen, motor, controls, mounting accessories and other components as required for a complete installation and complying with requirements indicated for screen surface, controls and for case, motor and screen under description of operation and type.

B. Location: Auditorium

C. Installation type - above ceiling

D. Basis of specification: Da-Lite Advantage Deluxe Electrical.

1. Viewing Surface of Screen:
   a. Matte white viewing surface with minimum gain characteristics complying with FS GG-S-00172D(1) for Type A screen surface.
   b. Edge treatment: 2" Black masking borders.
2. Screen Case: Extruded aluminum with self-trimming flange. Case shall be designed to receive mounting hardware and is sized to suit projection screen.
   a. Case Finish: Powder coated white.
   b. Case Closure Door: Include automatically operated, hinged powder coated aluminum finish screen closure door on case bottom.
   c. Case Access Door: Hinged, powder coated aluminum finish screen access door on case bottom for maintenance access.
3. Screen Controls: Remotely control operation of each screen as follows:
   a. Single Motor: Low Voltage Control (LVC), built-in.
   b. End-Mounted-Motor-Operated Screens, open
      1) Motor: Instant reversing, gear drive motor of size and capacity recommended by screen manufacturer, with permanently lubricated ball bearings, automatic thermal overload protection, preset limit switches to automatically stop screen in "up" and "down" position, and positive stop action to prevent coasting; mounted in motor compartment in the following location and remotely controlled as indicated. Mount motor on end of screen as indicated.
4. Screen: Mildew- and flame-resistant glass fiber fabric with vinyl-coated viewing surface complying with requirements indicated, with top edge mounted on, and securely anchored to, rigid metal roller supported by self-aligning bearings in brackets.
5. Size of viewing surface: 120" x 160".
6. Drop length: Provide 3'- 4' extra drop length of dimension. Field verify requirements to provide screen bottom height of 42" above finished floor.

**PART 3 EXECUTION**

3.01 EXAMINATION

A. Verify that substrate is finished and ready to accept screen installation.

NOT FOR BIDDING

B. If substrate preparation is the responsibility of another installer, notify Architect of unsatisfactory preparation before proceeding.

C. Verify that openings for recessed screens are correctly sized.

D. Verify that entrances to installation area are sized to permit entry of rigid screen.

E. Verify type and location of electrical connections.

F. Do not install projection screens until climate control systems are in place and interior painting and other finishes are completed.

3.02 PREPARATION

A. Coordinate screen installation with installation of projection systems.

B. Coordinate installation with adjacent construction and fixtures, including ceilings, walls, lighting, fire suppression, and registers and grilles.

3.03 INSTALLATION

A. Install in accordance with manufacturer's instructions, using manufacturer's recommended hardware for relevant substrates.

B. Do not field cut screens.

C. Install screens in mountings as specified and as indicated on drawings.

D. Install multiple screens in accordance with drawings and manufacturer's instructions. Verify that screens are aligned horizontally and vertically, and that spacing between screens is uniform and of minimum size.

E. Handle rigid screen materials with care to avoid damage. Use equipment only on uncoated side.

F. Install plumb and level.

G. Install electrically operated screens ready for connection to power and control systems by others.

H. When installing electrical masking, do not damage underlying screen.

I. Adjust projection screens and related hardware in accordance with manufacturer's instructions for proper placement and operation.

J. Test electrical screens for proper working condition. Adjust as needed.

K. Test masking systems for proper format control. Adjust as needed.

3.04 PROTECTION

A. Protect installed products until completion of project.

B. Touch up, repair, or replace damaged products before Date of Substantial Completion.

**END OF SECTION**

NOT FOR BIDDING

# SECTION 115415
# KILNS

## PART 1 - GENERAL

1.01 SECTION INCLUDES

A. Electric Kilns.

B. Downdraft ventilation system

C. Accessories.

1.02 RELATED SECTIONS

A. Section 260519 - Low-Voltage Electrical Power Conductors and Cables: Services and connections to kilns and ventilation systems.

1.03 DESIGN REQUIREMENTS

A. Install kiln in well-ventilated, sheltered area. Do not permit temperature to exceed 105 degrees F while kiln is in use.

B. Provide a minimum of 18 inches between kiln and adjacent walls, other kilns, shelving, and other obstructions. When installing multiple kilns in the same room, ensure that the control boxes on the kilns are not facing adjacent kilns.

C. Locate kiln in a room or space with a bare concrete floor. If a bare concrete floor is not available provide a non-combustible substrate and two inches of masonry below the kiln extending a minimum of 12 inches beyond the outside dimensions of the kiln.

D. If installing kilns in a room or space with a fire suppression system, do not place kilns in such a manner so as to cause sprinkler heads to go off.

E. If installing kilns in proximity to a marine environment, locate the kilns indoors and protect from exposure to damp air to avoid corrosion.

1.04 SUBMITTALS

A. Submit under provisions of Section 013300.

B. Product Data: Submit for kilns, ventilation systems, and accessories. Include product data, installation instructions, and manufacturer's recommendations.

C. Shop Drawings: Submit for kilns. Include plans indicating space required and relationship to work of other sections.

D. Operating and Maintenance Data: For kilns and ventilation systems to include in maintenance manuals.

E. Warranties: Special warranties specified in this section.

1.05 QUALITY ASSURANCE

A. Source Limitations: Obtain kilns, ventilation systems, and accessories through one source from a single manufacturer. Kiln and ventilation system to be UL listed as a system.

B. Regulatory Requirements: Comply with provisions of the following product certifications:

1. NFPA: Provide kilns and ventilation systems listed and labeled as defined in NFPA 70, Article 100, by a testing agency acceptable to authorities having jurisdiction, and marked for intended use.

2. UL and NEMA: Provide electrical components required as part of kilns and ventilation systems that are listed and labeled by UL and that comply with applicable NEMA standards.

NOT FOR BIDDING

1.06 DELIVERY, STORAGE AND HANDLING

A. Deliver kilns, ventilation systems, and accessories in manufacturer's original packaging with protective covering intact.

B. Do not stack other items on top of packaged kilns during transportation and storage. Stack kilns with top end up.

C. Utilize equipment capable of moving the kiln and packaging without damage and install kilns into location.

D. Protect from damage due to weather, excessive temperature, and construction operations.

1.07 WARRANTY

A. Special Warranties: Manufacturer's standard form in which manufacturer of each kiln specified agrees to repair or replace kilns that fail in materials or workmanship within specified warranty period. Warranty includes labor for repair or replacement.

1. Kiln: Two-year limited warranty.

**PART 2 - PRODUCTS**

2.01 MANUFACTURERS

A. Basis-of-Design Product: The design for kilns, ventilation systems, and accessories is Skutt Kilns, 6441 SE Johnson Creek Blvd, Portland, OR 97206-9535, Telephone: 503-774-6000, Fax: 503-774-7833, Web Site: www.skutt.com.

B. Substitutions will be considered under provisions of Section 01 6000.

2.02 ELECTRIC KILNS

A. Electric Kilns: Skutt Model No. KM-1027-3 electric kilns with components, options, and accessories needed to comply with requirements and provide complete functional kilns including the following components.

1. Kiln stand.
2. Kiln floor or slab.
3. Fire brick.
4. Kiln elements.
5. Ring latch.
6. Chest handle.
7. Lid with lifter and latch.
8. Control box.
9. Thermocouple.
10. Controller touch pad.
11. Peep plugs.

B. Factory prewire kilns for electrical switching devices and computer interface system. Factory predrill holes in the kiln lid and floor for the downdraft ventilation system.

1. Electrical characteristics: 208v, 3 phase, 31.7 amps

C. Other Approved Manufacturers:

1. Paragon Kilns; www.paragonweb.com.
2. Model: TNF-24-3.

2.03 DOWNDRAFT VENTILATION SYSTEM

A. Downdraft Ventilation System: Skutt "EnviroVent 2-inch negative pressure downdraft ventilation system; capable of removing hazardous fumes only, not heat. System to consist of the following components:

NOT FOR BIDDING

1. Blower motor with six (6) ft power cord and in-line switch.
2. 8 x 12 inch mounting plate.
3. Eight (8) ft x three (3) inch flexible aluminum duct.
4. Spring-loaded plenum cup assembly.
5. Blower inlet tube.
6. Blower discharge tube.
7. Plenum spring.
8. Three (3) to four (4) inch connector.
9. Floor mounting plate.
10. Mounting hardware.

B. System fits a single top-loading, multi-sided, electric kiln with a chamber size less than 12 cu ft. Provide a dual intake kit to vent a single kiln over 12 cu ft or two (2) kilns with chamber volumes each under 12 cu ft. Maximum chamber volume that can be vented with one (1) motor is 24 cu ft.

C. Electrical Switching Device: Skutt "EnviroLink" electrical switching device utilizing a programmable power output in the controller to turn the downdraft ventilation system on and off.

2.04 ACCESSORIES

A. Angled Touchpad Mount: Skutt "Easyview" Angled Touchpad; permits easy viewing and programming of kiln controls.

B. Computer Interface System (CIS): Computer interface system including required software and hardware to connect a computer to the kiln controller.

C. Furniture Kits: Kit includes shelves and one (1) or more posts. Kits are designed to fire to Cone 10 temperatures.

**PART 3 - EXECUTION**

3.01 EXAMINATION

A. Examine substrates, areas, and conditions where kilns, ventilation systems, and accessories, for compliance with requirements that affect installation and with requirements for installation tolerances. Notify the Architect in writing of conditions detrimental to proper completion of the work. Do not proceed with work until unsatisfactory conditions have been corrected.

3.02 PREPARATION

A. Downdraft Ventilation System:

1. Ensure that kiln stand is a minimum of eight inches high. If stand is lower than eight inches high, either shim legs to increase distance from floor to eight inches or replace stand with one that is eight inches high.
2. If kiln does not have factory drilled holes, provide number, size of holes as recommended by the manufacturer for the specific kiln model. Locate holes in accordance with manufacturer's recommendations.

3.03 INSTALLATION

A. Install in strict accordance with manufacturer's written installation instructions and recommendations. Coordinate installation with adjacent work to ensure proper clearances.

B. Install units in final locations after finishes have been completed in each area. Verify that clearances are adequate to properly operate equipment.

C. Set units level, plumb, properly aligned, and securely in place.

NOT FOR BIDDING

D. See Division 26 sections for electrical requirements.

E. Downdraft Ventilation System:
   1. Assemble and install system components on kiln in accordance with manufacturer's written instructions.
   2. Install the blower and motor assembly on the wall in a location that is close enough for the flexible aluminum duct to reach the kiln without overstretching the duct. Where wall-mounting is not possible, mount the vent motor on the floor or above the ceiling.

3.04 CLEANING AND PROTECTION

A. Test kilns, ventilation systems, and accessories to verify proper operation. Make necessary adjustments.

B. Verify that accessories required have been furnished and installed.

C. Remove packing material and leave kilns in clean condition, ready for operation.

**END OF SECTION**

NOT FOR BIDDING

# SECTION 116113
# ORCHESTRA SHELL

## PART 1 – GENERAL

1.01 RELATED DOCUMENTS

A. Drawings and general provisions of the Contract, including General and Supplementary conditions and Division 01 Specification Sections, apply to this Section.

1.02 WORK INCLUDED

A. The entire contents of this specification are included in Alternate 7.

B. Furnish and install an orchestra shell, as shown on the drawings and specified herein.

C. The full stage symphonic acoustical shell shall consist of a system of acoustical panels of appropriate construction, and adjustable to proper positions, to control and reflect a maximum range of audible frequencies.

D. The shell shall consist of two parts:
   1. Free-standing, self-supporting moveable towers for the back and side walls.
   2. Ceiling panels to be suspended and flown from stage rigging.

1.03 RELATED WORK

A. Related work includes, but is not limited to, the following:
   1. Stage rigging for the ceiling panels (Alternate 7).
   2. Stage floor.

1.04 FLEXIBILITY

A. The shell shall be flexible permitting rearrangement to various size configurations. Ceiling panels shall be capable of angular adjustment for proper blending and projection of sound.

1.05 STORAGE

A. Wall towers shall be designed so that they may be nested for storage without dismantling and shall nest in the designated storage area. Ceiling panels shall be designed to hang from theatrical rigging and can be rotated to a vertical position and stored in the fly loft.

1.06 POST-BID SUBMITTALS

A. Submit drawings showing shell size, panel configuration and dimensions, as well as all details of fabrication.

B. Submit a complete list of manufactured products to be incorporated in the work shall be provided with manufacturer's identification, grade, conformance to standards and specifications, and U.L. labels, as required.

C. Submit wiring and connection diagrams for lighting.

1.07 PERFORMANCE REQUIREMENTS

A. All structural framing shall be steel or aluminum components.

B. All panels shall be composite construction with fiber honeycomb core and stressed-skin surface to provide maximum panel rigidity.

C. Tower movement shall be accomplished by means of a wheeled transport.

1.08 INSTRUCTIONS

A. At the time of installation, furnish Operation and Maintenance Manuals, which will include instructions for safe handling and deployment, warranty statement, replacement parts, regular maintenance requirements, and contact information for future service and information.

NOT FOR BIDDING

B. At the request of the owner, a sample owner's manual may be submitted for inspection and approval at the time of bid.

C. All maintenance and operation information shall be bound into an 8-1/2 inch x 11 inch booklet with cover stock front and back covers.

1.09 COMPLETION, TRAINING

A. After installation is complete, owner's on-site representative shall be contacted by installation crew lead for final inspection.

B. Installation crew lead shall provide training to persons of the owner's choice, which shall include:
   1. Review of all instructional and maintenance documentation.
   2. Complete run-through of shell deployment from storage to performance position, and back again.
   3. Adjustment of ceiling panel angles as requested.
   4. Completion of any deficient work as requested.

1.10 WARRANTY

A. The manufacturer shall warrant this equipment to be free from defects in materials and workmanship, under normal use and service, for a period of three years from date of acceptance.

B. A full corporate warranty statement shall be provided.

1.11 ESTIMATED PRODUCT LIFE CYCLE

A. The shell shall be designed for a 20-year life cycle based on average usage.

**PART 2 – CONSTRUCTION**

2.01 ORCHESTRA SHELL BASIS OF DESIGN

A. The following are acceptable products and manufacturers:
   1. Bravado Acoustical Shell
      Staging Concepts
      Minneapolis, MN 55447
      (763) 533-2594
   2. Maestro Acoustical Shell
      Wenger Corporation
      Owatonna, MN 55060
      (507) 455-4100
   3. Genius II Acoustical Shell
      StageRight
      Clare, MI 48617
      (800) 438-4499

2.02 ACOUSTICAL PANELS

A. Composite Construction
   1. All panels shall be of composite construction.
   2. Core shall be a minimum of 1-inch thick resin-impregnated fiber honeycomb of 80-60-15 composition (15% resin minimum).
   3. Stressed skins shall be: Painted; 1/8-inch minimum tempered hardboard face and back.
   4. Lamination shall be by means of water-activated urethane adhesive (no contact adhesive acceptable).
   5. Panels shall include integral extruded aluminum caps along the straight edges.
   6. All front surface panels shall be free of exposed fasteners.

NOT FOR BIDDING

B. Shape
   1. All tower panels shall have a 60 to 72-inch radius curve.
   2. Ceilings panels shall have a 60 to 72-inch radius curve.

2.03 SHELL WALL TOWERS:

A. Configuration
   1. Seven towers shall consist of one 4-foot center panel and two 4-foot adjustable wing panels, which create an approximate 12-foot-wide tower.
   2. Lower wing panel may be specified as door in any locations required.
   3. Door shall have a minimum opening clearance of 36-inches.
   4. All instructions pertaining to the safe handling and operation of towers shall be permanently attached to the back of each tower in plain view.

B. Vertical framework of towers shall be steel or aluminum alloy joined at connections by formed steel components.

C. Horizontal frame shall be constructed of steel or extruded aluminum and shall join vertical frame members.

D. Base
   1. Each tower shall be equipped with a counterweighted base assembly for stability.
   2. Framework of base shall be steel or extruded aluminum alloy joined at connections by formed steel components.
   3. Base frame components shall be connected by formed steel components.
   4. Tower frame and base frame shall be connected by formed steel components.
   5. Counterweight shall be profiled steel plate. Weight shall be determined by size of tower.

E. Wing-stays
   1. Telescoping wing-stay shall allow the locking of tower wings in performance or storage positions.
   2. Wing-stay shall position wing panels in their optimal performance position.
   3. Wing-stay lock shall be operable from the floor.

F. Wing and Door Hinges
   1. Wing and door panels shall be mounted to frame with split hinge featuring self-lubricating Delrin thrust and radial bearings.
   2. Hinges without integral bearings that prevent metal-upon-metal friction are not acceptable.

G. Door hardware
   1. Doors shall feature a slide-lock mechanism to lock door to wing for use when transporting and storing towers.
   2. Doors shall incorporate inside door handles.

H. Each tower shall incorporate leveling adjustment means.

I. Towers shall be moved and positioned by means of a wheeled mover.
   Each tower shall be equipped with swivel casters at the rear of the base and adjustable non-marking pads at the front of the base.
   2. A separate wheeled transporter shall lift and transport the towers.
   3. Transporter shall have tri-casters at all three corners to improve precision of positioning.
   4. Transporter shall use a hand lever linked to lift brackets to raise the front of the tower off of the floor.
   5. Tower systems using hydraulic means to lift tower weight are not acceptable due to the risk of damage to stage and stage equipment from leaking hydraulic fluid.

J. Storage
   1. Each tower shall be designed to nest within another to minimize storage space.

NOT FOR BIDDING

2. Lower portion of center shell tower panel shall be removable to allow nesting of towers, as well as provide visual access for tower positioning.
3. Removable panel shall be removable from the back side of the shell tower.
4. Removable center panel shall store securely on the back side of the shell tower during storage and transport.
5. All of the towers and the mover shall store in the area provided on the drawings.

K. Trim strip shall be constructed of steel or extruded aluminum required to prevent backstage light from shining between panels of shell towers.

2.04 SHELL CEILING PANELS

A. Configuration
1. Shell ceiling panels shall hang from the stage rigging batten.
2. Ceilings shall store in a vertical position, and shall rotate as an entire row to and from an angle specified by the user for performance.

B. Hardware
1. Shell ceiling angle shall be variable by means of an adjustment mechanism.
2. Ceiling angle adjustment means shall allow repeated deployment of ceilings to performance position without resetting angle.
3. Ceilings without integral bearings that prevent metal-on metal friction are not acceptable.

C. Operation and Storage
1. Ceiling shall rotate from performance to vertical storage position.
2. Ceiling shall be balanced such that each row shall require no more than two people to deploy.

2.05 FINISHES

A. Panel face shall be plastic laminate to be determined by Architect.

B. Panel Back: Painted black

C. Trim strip: Paint color to be determined by Architect.

**PART 3 – EXECUTION**

3.01 GENERAL

A. Fabrication shall be free of sharp edges and corners, tightly assembled and free from rattles, buzzes and resonant frequencies in the audible range. Hinges and pivots shall be aligned with no binding or excess friction.

B. Design and fabrication shall be completed such that transport and installation costs to the owner are minimized to the greatest extent possible.

3.02 INSTALLATION

A. Shall be in accordance with manufacturer's instructions.

B. Original installation shall be completed by the manufacturer.

**END OF SECTION**

NOT FOR BIDDING

# SECTION 116133
# RIGGING SYSTEMS AND DRAPERIES

## PART 1 – GENERAL

1.01 RELATED DOCUMENTS

A. Drawings and general provisions of the Contract, including General and Supplementary conditions and Division 01 Specification Sections, apply to this Section.

1.02 SUMMARY

A. The work of this Section includes all labor, materials, equipment and services necessary to complete the Stage Rigging and Draperies installation, as shown on the drawings and specified herein, including, but not limited to, the following:
   1. Fixed-speed motorized line sets
   2. Dead hung traveler tracks
   3. Cable management
   4. Mule blocks, rollers and guides as necessary to provide proper alignment and maintain allowable fleet angles
   5. Additional support structures as required to meet the intent of the Contract Documents
   6. Control system for motorized rigging
   7. House curtain
   8. Stage draperies

B. Related work includes the following:
   1. Rigging support steel
   2. Finishes
   3. Power feeds and electrical work for motorized rigging, including conduit and wire between control components, and terminations.
   4. Stage lighting system, including junction boxes and multiconductor cables.
   5. Mechanical system
   6. Fire protection system
   7. Performance Lighting Systems Installation
   8. Rigging Systems Electrical Work
   9. Orchestra Shell
   10. Commissioning of Electrical Systems

1.03 DEFINITIONS

A. Furnish – supply equipment to the project for use or installation by others.

B. Install – install equipment provided to the project by others.

C. Provide – supply and install equipment.

1.04 FULL WORKING SYSTEMS

A. Review Drawings and Specifications that affect work in this Section.

B. Notify Architect upon indication that work in this Section cannot be completed as specified or scheduled.

C. Provide additional parts or devices required for functional requirements of control systems at no extra cost to Owner.

1.05 QUALITY ASSURANCE

A. All equipment shall be manufactured and installed in accordance with the applicable standards of the following organizations:
   1. American Iron and Steel Institute (AISI).

NOT FOR BIDDING

2. American National Standards Institute (ANSI).
3. American Society of Mechanical Engineers (ASME).
4. American Society for Testing and Materials (ASTM).
5. American Welding Society (AWS).
6. Entertainment Services and Technology Association (ESTA).
7. Industrial Fasteners Institute (IFI).
8. International Organization for Standardization (ISO).
9. National Association of Chain Manufacturers (NACM).
10. National Fire Protection Institute (NFPA).
11. Society of Automotive Engineers (SAE).
12. American Gear Manufacturers Association (AGMA).
13. National Electrical Code (NEC).
14. National Electrical Manufacturers Association (NEMA).

B. Minimum design factor for lifted loads: 8:1. Design factor shall include the effects of static loads, dynamic impact loads and reductions for end terminations and bending ratios.

C. Minimum design factor for static loads: 6:1

D. Maximum fleet angle: 1-1/2 degrees.

E. Cable bending ratio for manually operated systems shall be at least 30 times the diameter of the cable. Motorized systems shall comply with the wire rope manufacturer's minimum recommended bending ratio.

F. Wire rope clips shall be drop-forged.

G. Fasteners typically shall have a minimum SAE J429 Grade 5 or ISO R898 Class 8.8 rating. Bolts in tension shall have nuts of equivalent rating. Fasteners shall be self-locking or secured by alternate means to prevent loosening.

H. Shackles and turnbuckle jaws shall have screw pins, moused with plastic tie-wrap after installation.

I. Overspeed brakes shall require neither electricity nor external pressure for operation. The brake shall be factory set to automatically apply itself at 125 percent of the maximum rated winch speed Locate the brake either on the low speed output shaft of the reducer, or directly to the lifting line drum.

J. Gearmotor service factors and load classifications shall conform to AGMA recommendations. The minimum service factor shall be 1.0 for continuous operation and the minimum gearing service factor shall be 1.0 with a minimum mechanical service factor of 1.3.

K. Fixed speed motors shall have high inertia fans or electronic "soft" stopping and starting characteristics as dictated by the load capacity and speed of the winch.

L. Shafting shall be keyed and designed to meet ANSI standards in order to properly transmit applied loads and torques with allowance for impact.

M. This specification sets forth minimum safety standards, operational criteria, and minimum standards for quality in workmanship. It is the sole responsibility of the Contractor to design, engineer, furnish and install a safe, fully functional system in compliance with the design intent of the Contract Documents.

1.06 SUBMITTALS

A. Submit the following with the bid:
   1. Bill of materials, with parts identified by common industry standard numbers and/or descriptions.

NOT FOR BIDDING

2. Specified manufacturer's catalog cut sheets of all products called out in the bill of materials.
3. Statement that the Manufacturer agrees to the warranty provisions.
4. Projected timetable listing the time in weeks for each of the following activities:
   a. Shop drawing preparation
   b. Fabrication
   c. Shipping to site
   d. System commissioning
   e. As built drawing preparation

B. Shop Drawings
1. Submit shop drawings for review. Drawing sheet size shall be uniform. Submittals of more than 5 drawings shall be bound.
2. Shop drawings relating to Stage Rigging shall be stamped by a structural engineer licensed in the state of New Jersey.
3. Shop drawings shall include:
   a. Title sheet listing all sheets in the submittal.
   b. Scale plans and elevations.
   c. All information necessary to explain fully the design features, appearance, function, fabrication, installation, and use of system components in all phases of operation.
   d. Country of origin for equipment
4. Fabrication shall not commence until the Theatre Consultant and the Architect determine that the shop drawings are in compliance with the design intent of the Contract Documents.
5. Shop drawings shall be revised and resubmitted as required.

C. Manuals
1. Provide an operations and maintenance manual to the Owner at time of Owner Training. The manual shall include:
   a. Contractor contact information
   b. Manufacturer contact information
   c. System description
   d. Operation instructions, including safety measures
   e. Maintenance instructions, including recommended procedures and schedules for inspecting system components
   f. Equipment design parameters including safe working loads and duty cycles.
   g. Parts and subassembly lists
   h. Spare parts list and source information
   i. Catalog cuts for all purchased equipment
2. Provide the above on letter size and/or tabloid size paper, bound in standard 3-ring binders. Also provide documents in printable electronic format, such as PDF or other universal format files, on USB storage drives.

D. As-built Drawings
1. Within one month of system acceptance, provide complete as-built drawings. The as-built drawings shall include:
   a. Final shop drawings.
   b. Final bill of materials.
2. Provide the as-built drawings on tabloid size paper, bound in standard 3-ring binders. Also provide as-built drawings in printable electronic format, such as PDF or other universal format files, on USB storage drives.

1.07 WARRANTY

NOT FOR BIDDING

A. The Manufacturer shall warrant the equipment as follows:
   1. Part One - According to the guarantee provisions in the General Conditions
   2. Part Two - Additionally, for three years from acceptance of the systems, provide services detailed below:
      a. Warrant the equipment in this Section to be free of defective components, faulty workmanship and improper adjustment for a period of 3 years after acceptance of the completed installation by the Owner. Items showing evidence of defective materials or workmanship shall be repaired and replaced at no cost to the Owner within 30 days of notification. Rectify conditions that might present a hazard to human life or property within 48 hours of notification. The Warranty shall not cover the results of normal use, nor shall it cover damage due to neglect or improper use of the equipment.

**PART 2 – EQUIPMENT**

2.01 ACCEPTABLE CONTRACTORS

A. The equipment shall be furnished, installed, and provided by only one of the following:
   1. J. R. Clancy, Inc.
      7041 Interstate Island Road
      Syracuse, NY 13209
      315.451.3440
   2. M. Cramer & Associates
      229 N. 12th St
      Philadelphia, PA 19107
      215.625.3603
   3. Texas Scenic Company/Pook Diement and Ohl
      5423 Jackwood Drive
      San Antonio, TX 78238
      210.684.0091
   4. iWeiss
      815 Fairview Avenue #10
      Fairview, NJ 07022
      201.402.6500

B. Additional companies wishing to bid shall submit the following 10 days before submission of bids, for review and approval by the Theatre Consultant:
   1. Firm history.
   2. A list of completed installations which are comparable in scope to the job described here.
   3. A minimum of 5 representative shop drawing sheets.
   4. If requested, a current certified financial statement showing sufficient financial base for the size of job described here.

2.02 FINISHES

A. Metal parts shall be free from rust, scale, dirt, and welding spatter. All weldments or other metal components shall receive a coat of corrosion resistant primer prior to finish coating and component assembly.

B. Finish coat shall be flat alkyd enamel. Color shall be black, except where noted otherwise in the Contract Documents.

2.03 DEAD HUNG LINESETS

A. Provide dead hanging assemblies as shown on drawings. Each shall consist of a pipe clamp, proof coil chain with shackles at both ends, and a beam clamp.

NOT FOR BIDDING

2.04 SHEAVES

A. Sheaves for motorized sets shall be manufacturer's standard.

B. Sheave grooves shall conform to cable and rope manufacturers' standards for groove shape and tolerance.

C. Sheaves shall have precision ball bearings, except as specified otherwise below. Bearings shall be rated for the maximum static and dynamic loads at 300 feet per minute maximum RPM, plus manufacturer's recommended safety factor. Minimum lifespan rating: 2000 hours.

D. Shafts shall be made of machined steel.

E. Sheave hubs shall be sized to provide adequate load support for the bearing assembly. Hub bores shall conform to the tolerances of the bearing manufacturer.

F. Sheaves shall rotate plumb and true without touching the side plates.

G. Sheaves showing evidence of excessive runout, or untrue rotation shall be rejected.

2.05 LIFTING LINES

A. Lifting lines shall be of sufficient diameter and appropriate classification to suit the system operational requirements. Minimum standard for overhead lifting: 7X19 IWRC

B. Do not use any damaged or permanently deformed wire rope.

C. Use continuous lines from the same spool, free of knots, splices or intermediate fasteners unless specifically called for elsewhere in the Contract Documents.

2.06 BATTEN TERMINATIONS

A. Lifting line terminations at the batten shall consist of a thimble, a copper Nicopress fitting, a jaw/jaw turnbuckle, and a pipe clamp. Mouse turnbuckles with plastic tie wrap. Wire mousing is not acceptable.

B. Secure the loose ends of the wire rope to the standing portion of the lines with plastic tie wrap.

2.07 PIPE BATTENS

A. Battens shall be 1-1/2-inch nominal diameter standard weight (Schedule 40) black iron pipe.

B. Batten splices shall be made with an 18-inch-long, 1-9/16-inch diameter DOM tube with a minimum wall thickness of 3/16 inch. Weld one end of the splice tube. Fasten the other end with two 3/8-inch bolts. Threaded couplings are not acceptable.

C. Provide yellow plastic end caps on the batten ends.

D. Mark the centerline of the batten with a 1/2-inch-wide, painted safety yellow line.

E. Paint set numbers at both ends of the batten on the top and bottom in 1" high white stencil numbers. Durable labels are an acceptable alternate. Submit a sample pipe end and label specification if durable labels are selected.

2.08 MOTORIZED HOISTS

A. Basis of Design: ETC Prodigy P1

B. Hoists

1. Each wire rope lift line shall adhere to a design factor of 10:1 with an ultimate strength of 4200 pounds. All load path components between the building structure and the batten shall exceed the breaking strength of the wire rope. The motor brake shall be rated at least at 125% of the motor torque.
2. Hoists shall be capable of supporting the following loads:
   a. General purpose Fixed Speed 30 fpm 2000-pound capacity in standard configuration.

NOT FOR BIDDING

3. The standard general purpose hoist shall consist of the following major components: 1) Powerhead, 2) compression tube with beam clamps, loft blocks, lift line and lift line terminations, batten termination) and 3) pipe batten.
4. The standard stage electric hoist shall consist of the following major components: 1) Powerhead, 2) Compression Tube with beam clamps, cable management system, loft blocks, lift line and lift line terminations, 3) pipe batten and power/control distribution strip.
5. The hoist shall include the following features:
   a. A Powerhead containing the following elements: the gear motor, motor brake, load brake, limit switches operating electronics, load cell, slack line detector, absolute position sensors, cable drum assembly, and wire rope.
   b. A Compression Tube that prevents hoist system lateral forces from transferring to the building. Hoists or hoisting systems that impose a lateral load on the building shall not be acceptable.
   c. The hoist shall incorporate a built-in load cell.
   d. The hoist shall incorporate a built-in slack line sensor.
   e. The hoist shall include the emergency contactor built into the hoist.
6. The hoist shall be manufactured from UL Listed components and shall be UL Listed and tested as a complete system.

C. Powerhead
1. The Powerhead shall be a fully enclosed powder coated sheet metal housing that shall prevent contact with moving and electrical parts and shall provide protection against dirt, dust and debris.
2. For setup and maintenance, the following functions shall be available from the Powerhead: power and operating switches, address setting knobs, limit switch setting knobs, limit switch override buttons, indicators for power, status and communication. Each of these functions shall be clearly labeled.

D. Gearmotor and Motor Brake
1. The gear motor and motor brake shall be an integral unit from a single manufacturer. It shall operate on 480 Volt 60 Hz, 3 phase current.
2. The motor brake shall be integral to the gear motor and shall be capable of holding 125% of the motor full load torque.
3. The motor brake shall be spring actuated to apply and hold braking force.
4. The motor brake shall be magnetically released and held open upon actuation.

E. Load Brake
1. Fixed Speed Hoists
   a. The rotary disk load brake shall bring the moving load to a complete stop and shall hold the load in position in the event of a mechanical failure of the motor, motor brake or gearbox.
   b. Noise from the load brake shall be minimally audible at any time in the operational cycle.
   c. Normal hoist operation shall not be limited by heat or noise caused by the load brake.
   d. The load brake shall be mechanically released when the load is moving in the up direction. The load brake shall close when the hoist has stopped. The load brake shall always be engaged when the load has stopped moving either up or down. When lowering the load the load brake shall partially disengage to allow and control descent of the batten. The load brake shall remain closed in the absence of rotational torque on the gearbox.

F. Limit Switch

NOT FOR BIDDING

1. A limit switch assembly shall be mounted within the Powerhead for hard “normal” and “ultimate” end of travel limits. Hard end of travel limits shall be set/adjusted at the time of installation aided by an indicator light visible on the bottom panel of the Powerhead cover. Any system that indicates that the limit has been set by audible or tactile means only shall not be acceptable.

G. Load Sensor & Load Profiling
1. A load sensor shall be built into the Powerhead to create a profile of the actual load on the hoist as it travels through its normal cycle. The profile may be changed by “re-training” the profiling system whenever the suspended load is changed on the batten by activating a key-switch operated training cycle on the motor controller. The load sensor shall continuously monitor the load when load sensing is turned on.

H. Position Sensor
1. A position sensing system shall be built into the Powerhead to provide accurate position information. The system shall consist of two absolute sensor types that provide accurate position information for each batten at power-up of the system. Hoisting systems that require re-homing shall not be acceptable. Incremental encoders shall not be acceptable for position readout purposes.

I. Slack Line Detector
1. The slack line detector shall be built into the Powerhead. When a slack line condition in excess of 15” develops in a lift line, the slack line detector shall remove power from the hoist. The batten shall be allowed to move only in the upward direction to allow removal of the cause of the slack line fault.

J. Powerhead local information
1. Record of severe fault conditions with date and time stamp
2. Record of E-stops, overloads, moves and power cycles
3. Record of travel distance and peak loads since installation/inspection

K. Compression Tube and Beam Clamps
1. The Compression Tube shall be a continuous channel of extruded aluminum engineered in conjunction with the beam clamps to neutralize rigging-generated lateral forces on the building.
2. The Compression Tube shall support the system loft blocks.
3. Compression Tube sections shall be joined into a continuous assembly by a pair of designated splicing plates at each tube joint.
4. Beam clamps shall be capable of attaching to the structure as designed.

L. Hangers
1. Raceway hangers shall be specially shaped flat bar that shall support the wire rope termination hardware and secure the raceway and the pipe batten.

M. Cable Management for Overstage Electrics
Per drawings

N. Power and Control Distribution
1. Each hoist shall receive power and control via a pair of appropriate length jumper cables extending from the Powerhead to the source outlets. Receptacles shall be installed in a sheet metal junction box or trough with outlets. Each outlet shall be located no more than 6’-0” away from the rear face of each hoist.
2. Each Powerhead shall include a power cord hardwired to the hoist with an appropriately sized twist-lock connector at the PCD end and a removable control cable with a circular 9 pin connector at each end. Provide a 20-amp 3 phase breaker in the PCD if required. The wiring and connectors shall be barriered between high and low voltage.

NOT FOR BIDDING

3. The power/distribution channel shall be UL LISTED for this application.

2.09 CONTROL SYSTEM FOR MOTORIZED RIGGING

A. Basis of Design: ETC QuickTouch 24

B. General:
1. The control system shall consist of a surface mounted primary controller and three remote E-stop stations.
2. The controller shall be UL Listed and shall be fabricated from UL Listed components.
3. The motor system shall also include one Fixed Speed Remote control device with 30' of flexible cable that may be attached to the system at the control panel.
4. The controller shall include the following features:
   a. Key operated power switch
   b. LCD display for feedback/operating information
   c. Key operated motor load profile training/enable switch
   d. Latching motor selection buttons with rear illuminated naming tabs
   e. Rear illuminated hold-to-operate (dead-man) up and down operation buttons
   f. Recessed speed adjustment slide-pot
   g. Rotary data entry encoder
   h. Dedicated E-stop button
   i. Outlet for wired remote
   j. Door

C. Physical
1. The back box and face panel shall be fabricated from 16ga powder coated sheet steel specially formed to provide support for installation as well as support for all components installed within the housing.
2. The face panel shall be printed with complete labeling information to identify the function of each of the buttons in the control station.
3. The face panel shall identify the system as a controller for stage rigging.

D. LCD SCREEN
1. The screen shall be rear illuminated and shall be dimmable.
2. During system startup the screen shall show the progress of the motor diagnostics self-tests. Upon completion of the startup sequence the screen shall indicate that the system is "OK" or shall provide specific information should a fault be detected. Fault conditions shall be reported in human readable text. Systems that report fault conditions in a series of blinking lights shall not be acceptable for this installation.
3. When a motor is selected the LCD screen shall readout the motor name and number, the current batten position above the floor, the amount of weight suspended from the batten, the trim position that is recorded, as well as two bar graph scales that show the current position of the batten, top and bottom limits and the current weight suspended from the batten.

E. MOTOR SELECTION/OPERATION BUTTONS
1. There shall be rear illuminated motor selection buttons. Buttons shall remain illuminated until de-selected.
2. Up to four motors may be selected to move at one time. When the up or down button is pushed and held, each motor shall move to its next stop location. If the stop location is the adjustable trim position, the motor can be made to continue to travel in the selected direction by releasing and re-pressing the up or down hold-to-operate button until the next stop for the motor(s) is reached.
3. A maximum of four motors may move at one time and only in one direction at a time.

NOT FOR BIDDING

4. Although four motors moving at one time is the factory default, it shall be possible to increase the quantity of simultaneously moving motors to eight or reduce it to one.
5. The system software will limit the number of simultaneous moving motors. As a backup, there shall be dedicated hardware to detect and disable the system if the system attempts to move more than the configured maximum quantity of motors.
6. All buttons shall fit neatly within each of the cover panel cutouts on the controller.

F. KEY SWITCHES
1. A key switch shall control power to the control system. The key must be in the lock and the key turned to the on position for the motor system to operate.
2. A separate key is required to turn on the load profiling system. That key must be in the lock and turned to the "ON" position for load profiling to function.
3. When load profiling is turned on the motor shall know the amount of weight that is supposed to be supported by the batten at any location in the path of travel. Should the weight exceed or be reduced below the profiled weight by a preset value, the motor shall stop operation until the fault is cleared.

G. SLACK LINE DETECTOR
1. The slack line detector is located in the Powerhead. When a slack line condition occurs, it shall cease motor movement and result in a fault message on the LCD screen on the controller. Movement in the upward direction shall be possible to clear the fault.

H. E-STOP
1. The E-stop button on the controller shall be a mushroom button. During normal operation the E-stop button shall be in the out position. An E-stop can be activated via this button by firmly pressing the button in. The button shall latch and immediately cause a class zero stop of all fixed speed motors in the system. The LCD screen shall report this as an E-stop condition. To continue system operation the E-stop button must be cleared by twisting the button to release the latch. Power to the control station must be cycled off/on to re-initiate the system. This action shall also initiate a self-test of the entire control system and contactors.
2. Up to three remote E-stop stations may be connected to the system. Each additional E-stop station shall operate in the same way as the primary E-stop.

I. SYSTEM DIAGNOSTICS
1. Upon energization the control system shall perform an automatic series of diagnostic tests that assure that all system safety functions are working. Should an error in the safety functions be determined, the controller shall report back a fault condition in the LCD display window and shall identify the nature of the fault.
2. Monthly, the system automatically shall perform an additional series of diagnostic tests to determine if there are any problems with any portion of the motor control system safety features. In the event of a problem, the controller shall report back a fault condition in the LCD display window and shall identify the nature of the fault.
Eleven months after a system inspection has been performed, the system shall remind the user to schedule a full system maintenance/inspection. The reminder shall remain in the system with a count-down calendar until it is turned off by the factory authorized and trained inspector.
4. The installing contractor shall be able to leave contact information within the system. This information shall be displayed at power up and in the event of severe fault conditions.

J. REMOTE CONTROL PENDANT
1. A remote control pendant with 30' long attached cable and plug shall be provided for the system. The remote control must be plugged to the control panel. When the remote control

NOT FOR BIDDING

is plugged in the E-stop on the remote is active. Systems requiring "shunt plugs" to bypass an unplugged remote control connector shall not be acceptable.

2. The remote control provides up/down control for those motors that have been preselected at the controller.

K. TRIM POSITIONS

1. It shall be possible to store and delete up to five trim positions per motor
2. The user shall be able to utilize three of these positions as general purpose trim positions, one as user programmable upper limit and one as user programmable lower limit.
3. During normal operation, the hoist shall stop at every trim position, but it shall also be possible to select a specific trim position as the target position for the next move.

## 2.10 STAGE DRAPERY SCHEDULE

A. Base Bid stage drapery schedule is as follows:

| Description | Quantity | Height | Width |
|---|---|---|---|
| House Curtain | 1 | 22'-0" | 57'-0" |
| Valance | 1 | 8'-0" | 57'-0" |
| Borders | 4 | 8'-0" | 51'-0" |
| Legs | 8 | 20'-0" | 8'-0" |
| Bi-part Traveler | 1 | 22'-0" | 57'-0" |
| Cyclorama | 1 | 23'-0" | 51'-0" |
| Scrim | 1 | 22'-0" | 51'-0" |

## 2.11 HOUSE CURTAIN AND VALANCE

A. The width of the house curtain is the finished width. The house curtain is in 2 halves, with a 3-foot overlap in the center.

B. Face fabric – 24 ounce, 100% Trevira CS Polyester, inherently flame retardant velour, KM Fabrics' "Charisma", or approved equal. Color: color to be selected by the Architect from the manufacturer's standard color range.

C. Lining - 100 percent polyester inherently flame retardant fabric, Dazian's "Janus", or approved equal. Color: beige or black to be selected by the Architect.

D. The house curtain and valance shall be sewn with box pleats to 50 percent fullness.

E. Reinforce the top of the curtains with polyester webbing weighing a minimum of 2.8 ounces per yard, and double stitched at the top. Provide machine-set black anodized No. 3 grommets on 1 foot centers.

F. Provide 36-inch-long, cotton No. 4 black tie lines. The center tie line shall be white.

G. Hem the bottom of the curtains with a 6 inch deep double turned hem with a separate canvas pocket approximately 3 inches above the bottom of the face fabric. Provide No. 8 zinc coated chain.

H. Finish the onstage edges over the entire height of the curtains so that no stitches are visible on the face.

I. Face back the center edges of the house curtain panels with one width of the face fabric.

J. Face back the offstage edge of the house curtain and valance 6 inches.

K. Lining of house curtain shall have same fullness as face fabric. Attach lining to face fabric with lace loops.

L. Valance shall be unlined.

M. Velour nap shall run down.

NOT FOR BIDDING

N. Label each piece at the top and bottom offstage corners with the dimensions of the piece, the manufacturer, and the date of manufacture.

O. Install the house curtain on the traveler track specified elsewhere in this section.

2.12 MASKING DRAPERIES

A. FABRICS
1. Legs, Borders, Travelers: 24 ounce, 100% Trevira CS Polyester, inherently flame retardant velour, KM Fabrics' "Charisma", or approved equal. Color: black.
2. Muslin Cyclorama: 100 percent cotton, .7 ounce per square foot, 32 foot wide, seamless fabric.. Color: bleached white.
3. Sharkstooth Scrim: 100 percent cotton, 35 foot wide seamless fabric. Color: Black.
4. Fabrics shall be flame treated in a manner approved by the appropriate local agency, where applicable. A notarized affidavit shall accompany the draperies attesting that all fabrics have been flame treated in the approved manner.
5. No pieced horizontal or split widths of fabric shall be incorporated in any part of any drapery.
6. Fabrics of 1 color shall be from 1 dye lot.
7. Velour nap shall run in a consistent direction. Nap shall run up for black velour masking pieces.

B. DRAPERY FABRICATION
1. The width of the travelers is the finished width. The travelers are in 2 halves, with a 2-foot overlap in the center.
2. All draperies are sewn flat and are unlined, except for the traveler curtains which shall be sewn to 50% fullness.
3. Reinforce the top of each piece with polyester webbing weighing a minimum of 2.8 ounces per yard, and double stitch at the top. Provide machine-set black anodized No. 3 grommets on 1-foot centers.
4. Provide 36-inch-long cotton No. 4 tie lines on all pipe-mounted pieces. Tie lines shall be black, except for the one at centerline, which shall be white. If a tie line is not on center, the two symmetrical about center shall be white.
5. Provide each tracked piece with oblong spring, carabiner type snaps.
6. Hem the bottoms of the legs and travelers with a 6-inch-deep double turned hem with a separate canvas chain pocket approximately 3 inches above the bottom of the face fabric. Provide No. 8 zinc coated chain.
7. Hem the bottoms of the borders, cyclorama and scrim with a 6-inch-deep double turned hemmed pipe pocket. Line the pocket with nylon fabric to prevent tearing. Furnish appropriate lengths of bottom pipe for each piece. Thread and cap both ends of each pipe. Provide couplers.
8. Sew back the face fabric of each piece 4 inches on both sides. The sides of each drapery piece shall hang plumb within 2 inches.
9. Label each piece at both bottom corners with the dimensions of the piece, the manufacturer, and the date of manufacture.
10. Install the traveler curtains on traveler tracks specified below

2.13 TRAVELER TRACK

A. Curtain track and related hardware shall be H&H Specialties Model 400 track rigged for bi-part operation. Supply track lengths with the minimum possible number of splices. Color: black.

B. Tracks shall be in two lengths with 2-feet of overlap.

C. Master and single carriers shall have nylon-tired wheels. Carriers shall have swivel eyes, trim chains, and rubber spacers. Provide carriers on 1-foot centers.

NOT FOR BIDDING

D. Provide live and dead-end pulleys, end stops, and lap clamps as required.

E. Operating lines shall be 1/2-inch stretch-resistant cord with a fiberglass center.
   1. Provide a floating floor pulley. Suspend a 5-pound gravity point bag beneath the floor block to maintain tension on the operating line.
   2. Provide clamps for attaching the tracks to the pipe battens.

2.14 DRAPERY STORAGE HAMPERS

A. Provide sufficient hampers to store all masking draperies.

B. Storage hampers shall have plywood tops and caster “donuts”.

2.15 SIGNAGE

A. Provide a wall-mounted “Rigging Information” sign in dark blue with light gray, Helvetica Medium characters as illustrated in the drawings. Wall mount the near the stage rigging controller.

B. Protect the sign with a 1/8-inch-thick clear plastic sheet screwed to the wall.

**PART 3 – EXECUTION**

3.01 COORDINATION

A. The Contractor is responsible for reviewing all drawings, specifications, and field conditions which affect the work in this Section. Notify the Architect whenever field measurements, analysis of the drawings and specifications, or progress of other trades indicates that the work in this Section cannot be completed as specified or as scheduled.

B. Within 6 weeks of the award of contract, and prior to the preparation of shop drawings, the Stage Rigging Contractor shall submit a written review of related work as it appears on the Contract Documents. The review shall identify errors, omissions or obstructions related to the installation and operation of the equipment in this Section. The sole intent of this written review is to identify potential problems as soon as possible. It is understood that some errors, omissions or obstructions may not be evident until the Rigging Contractor prepares shop drawings.

3.02 JOB CONDITIONS

A. The Contractor shall visit the site and verify all dimensions and existing conditions. The Contractor shall also be familiar with the work of adjoining trades and coordinate with their work.

B. The Contractor is ultimately responsible for the equipment fitting the intended spaces without interference.

3.03 INSTALLATION

A. Only trained personnel shall install the equipment in this Section.

B. Provide scaffolding and platforms as required for installation.

C. Wire ropes shall be aligned and muled so as not to touch anything except their sheave grooves and terminations.

D. Install all rigging components to maximize batten travel. High trim shall be 6 inches clear of the lowest obstruction.

E. Turnbuckles shall be moused with plastic tie wrap after adjustment. Wire mousing is not acceptable.

F. Shackle screw pins shall be moused with plastic tie wrap. Wire mousing is not acceptable.

G. Wire rope clips shall be spaced and bolts shall be tightened to the manufacturer’s recommended torque.

NOT FOR BIDDING

H. Attach Nicopress sleeves according to the manufacturer's instructions. Check the crimps with the manufacturer's go/no-go gauge. Check the adjustment of the Nicopress tool after every 50 crimps. Maximize the number of in-shop Nicopress attachments.

I. Use lock washers with all pipe clamps.

J. Battens shall be level and shall all trim to the same high and low positions within 1 inch.

K. Batten ends shall align within 1 inch.

L. Adjust set locations in the field as required and as directed by the Theatre Consultant for final adjustment, such as maintaining clearances, and minimizing spacing where desirable.

M. Secure all loose equipment, tools and debris from falling from the gridiron and galleries during all phases of the installation.

N. At the end of each day during the installation period, remove all refuse and scrap materials to collection points specified by the Owner Upon completion of the installation, leave all areas broom clean.

O. Locate all loose system parts as directed by the Owner.

3.04 PROTECTION OF EQUIPMENT

A. Protect the equipment in this Section from damage and deterioration, including rust, during all phases of the work, from the time of manufacture to installation.

B. Notify the General Contractor or Construction Manager in writing of jobsite conditions that would adversely affect the equipment after installation. Do not install the equipment if jobsite conditions beyond the control of the Rigging Contractor will result in damage or deterioration, including rust.

C. Rust resulting from flaws in manufacturing and finishing shall be covered under the Warranty.

3.05 CLEANING AND REPAIR

A. When construction is complete, restore all system components to their delivered condition. This includes dusting, cleaning and removal of construction materials such as fireproofing.

B. Repair any work or finishes that are damaged during installation by the Contractor for the work in this Section. This includes the work in this Section and the work of others. Where the work of others is damaged, reimburse the appropriate contractor for the repair.

3.06 OPERATION OF EQUIPMENT

A. Prior to completion of the installation and turnover to the Owner, the equipment in this section shall be operated by employees of the Contractor, those authorized by the Contractor, or those under the Contractor's supervision.

B. The Contractor shall advise the General Contractor or Construction Manager in writing of any unauthorized operation of the equipment.

3.07 DRAPERY INSTALLATION

A. Hang the house curtain. Hang all other draperies per the rigging schedule or as directed by the Owner for inspection and acceptance. If the Owner requests, return the draperies to their storage bags and hampers after inspection. The Owner shall assume responsibility for soiling and damage after acceptance.

B. Do not hang the draperies if environmental conditions in the building will be detrimental to the goods. Notify the Architect and the General Contractor or Construction Manager in writing of any adverse environmental conditions.

3.08 COMMISSIONING AND PUNCHLISTING

NOT FOR BIDDING

A. The Contractor shall work with the General Contractor or Construction Manager to arrange for a punchlisting period for the work in this Section. The punchlisting period shall take place at least 1 month before the first scheduled rehearsal on stage. Punchlisting shall consist of a minimum of an 8-hour day. The building schedule shall be such that no other conflicting or obstructing activity is taking place. Punchlisting shall include the operation of every component of each system specified here, including individual counterweight sets.

B. Set labeling shall be installed prior to punchlisting.

C. Prior to punchlisting, the Rigging Contractor shall commission the system and certify that the installation is complete and ready for punchlisting by the Theatre Consultant. If substantial portions of the installation are not complete, requiring the Consultant to make another punchlist trip, the Rigging Contractor shall compensate the Consultant for time spent and travel expenses. Compensation shall be at the Consultant's prevailing hourly and per diem rates.

3.09 TRAINING

A. Assist the Owner in becoming familiar with the completed installation and personally instruct representatives of the Owner in the proper operation and maintenance of all equipment provided. Training shall be a minimum of two 4-hour sessions.

3.10 OWNER'S ACCEPTANCE

A. The Owner will accept the work in this Section upon the satisfactory completion of all punch list items.

B. Prior to final acceptance, the Owner reserves the right to use any completed portion of the work in this Section at no additional cost, unless said use poses a potential hazard to personnel or risks damage to the work in this Section or the work of others.

C. The Warranty period shall commence upon final acceptance by the Owner.

**END OF SECTION**

NOT FOR BIDDING

# SECTION 116625
# GYMNASIUM EQUIPMENT

## PART 1 GENERAL

1.01 SECTION INCLUDES

A. Basketball backboards, goals, and support framing.

B. Floor sleeves for net and goal posts.

C. Wall mounted protection pads.

D. Gym divider curtains.

E. Volleyball nets and posts.

1.02 RELATED REQUIREMENTS

A. Section 033000 - Cast-in-Place Concrete: Concrete floor slab to receive floor sleeves and anchors.

B. Section 051200 - Structural Steel Framing: Structural members supporting basketball systems.

C. Section 055000 - Metal Fabrications: Secondary structural members supporting gymnasium equipment.

D. Section 096429 - Wood Strip Flooring: Gymnasium flooring.

E. Section 260583 - Wiring Connections.

1.03 REFERENCE STANDARDS

A. ASTM D412 - 06 - Standard Test Methods for Vulcanized Rubber and Thermoplastic Elastomers—Tension

B. ASTM D1056 - 07 - Standard Specification for Flexible Cellular Materials—Sponge or Expanded Rubber.

C. ASTM E84 - Standard Test Method for Surface Burning Characteristics of Building Materials; 2016.

D. ASTM F-355-01 - Test Method for Shock Absorbing Properties of Playing Surface Systems and Materials.

E. ASTM F-1081-03 - Standard Specification for Competition Wrestling Mats.

F. ASTM F1292 - 09 Standard Specification for Impact Attenuation of Surfacing Materials within the Use Zone of Playground Equipment

G. AWS D1.1/D1.1M - Structural Welding Code - Steel; 2015 (Errata 2016).

H. NFPA 70 - National Electrical Code; Most Recent Edition Adopted by Authority Having Jurisdiction, Including All Applicable Amendments and Supplements.

I. NFPA 101 - Life Safety Code; 2015.

J. NFPA 286 - Standard Methods of Fire Tests for Evaluating Contribution of Wall and Ceiling Interior Finish to Room Fire Growth; 2015.

1.04 ADMINISTRATIVE REQUIREMENTS

A. Large Components: Ensure that large components can be moved into final position without damage to other construction.

B. Electrically Operated Equipment: Coordinate location and electrical characteristics of service connection.

NOT FOR BIDDING

1.05 SUBMITTALS

A. Product Data: Provide manufacturer's data showing configuration, sizes, materials, finishes, hardware, and accessories; include:
   1. Electrical characteristics and connection locations.
   2. Fire rating certifications.
   3. Structural steel welder certifications.
   4. Manufacturer's installation instructions.

B. Shop Drawings: For custom fabricated equipment indicate, in large scale detail, construction methods; method of attachment or installation; type and gage of metal, hardware, and fittings; plan front elevation; elevations and dimensions; minimum one cross section; utility requirements as to types, sizes, and locations.

C. Samples: Submit samples of wall pad coverings in manufacturer's available range of colors.

D. Operating and maintenance data, for each operating equipment item.

E. Warranty: Submit manufacturer warranty and ensure that forms have been completed in Owner's name and registered with manufacturer.

1.06 QUALITY ASSURANCE

A. Manufacturer Qualifications: Company specializing in manufacturing products specified in this section, with not less than three years of documented experience.

B. Installer Qualifications: Company specializing in performing work of the type specified with minimum three years of experience.

1.07 DELIVERY, STORAGE, AND HANDLING

A. Deliver products to project site in manufacturer's original packaging with factory original labels attached.

B. Store products indoors and elevated above floor; prevent warping, twisting, or sagging.

C. Store products in accordance with manufacturer's instructions; protect from extremes of weather, temperature, moisture and other damage.

**PART 2 PRODUCTS**

2.01 MANUFACTURERS

A. Gymnasium Equipment:
   1. Draper, Inc: www.draperinc.com/sle.
   2. Performance Sports Systems: www.perfsports.com.
   3. Porter Athletic Equipment Company: www.porterathletic.com.
   4. Substitutions: See Section 016000 - Product Requirements.

2.02 GENERAL REQUIREMENTS

A. See drawings for sizes and locations, unless noted otherwise.

B. Where mounting dimensions or sizes are not indicated, comply with applicable requirements of the following:
   1. National Federation of State High School Associations (NFHS) sports rules.

C. Provide mounting plates, brackets, and anchors of sufficient size and strength to securely attach equipment to building structure; comply with requirements of contract documents.

D. Hardware: Heavy duty steel hardware, as recommended by manufacturer.

E. Electrical Wiring and Components: Comply with NFPA 70; provide UL-listed equipment.

NOT FOR BIDDING

F. Structural Steel Fabrications: Welded in accordance with AWS D1.1/D1.1M, using certified welders.

2.03 DIVIDER CURTAINS

A. Gymnasium Divider Curtains:
1. Curtain Material: Class A rated, self-extinguishing vinyl coated polyester meeting NFPA 101.
a. Upper Section: 9 oz/sq yd vinyl mesh fabric.
b. Lower Section: 18 oz/sq yd solid vinyl coated polyester.
2. Operation: Vertical lift roll-fold, motorized.
a. Motor: 3/4 HP, 120 v.
3.
4. Controls: Wall switch, keyed.
5. Basis of Design:
a. Porter Athletic Equipment Company; 90670000 - Roll Fold Gymnasium Divider Curtain.
b. Substitutions: See Section 016000 - Product Requirements.

2.04 BASKETBALL

A. Ceiling-Suspended Backstop Assemblies: Capable of mounting both rectangular and fan-shaped backboards.
1. Framing: Dual strut; forward folding framing.
2. Folding Control System: Electric hoist that folds backstop with 115 volt actuator, integral limit switches that provide automatic shut-off in both positions, and safety catch with automatic reset.
3. Framing Color: Manufacturer's standard.
4. Basis of Design: No 99[illegible]000 manufactured by Porter Athletic Equipment Company.
a. Other Manufacturers:
1) Draper, Inc. EZ Fold Ceiling Suspended Forward-Folding: www.draper[illegible]com/#sle.
b. Substitutions: See Section 016000 - Product Requirements.

B. Backboards: Tempered glass, rectangular shaped.
1. Frame: Brushed aluminum edge, steel mounting.
2. Markings: Painted.
3. Provide safety padding for bottom edge of backboard.
4. Provide mounting kit.
5. Color: Manufacturer's standard.
6. Basis of Design: No.00208-000 manufactured by Porter Athletic Equipment Company.

C. Goals: Steel rim, mounted to backboard, with attached nylon anti-whip net; complete with mounting hardware.
1. Net Attachment Device: Tube-tie.
2. Finish: Powder coat orange.
3. Basis of Design: No.00245-500 manufactured by Porter Athletic Equipment Company.
4. Manufacturers:
a. Porter Athletic Equipment Company.
b. Draper, Inc.: Product No. 503581.
c. Performance Sports Systems: Product No. 2000.

D. Outdoor Basketball Equipment

NOT FOR BIDDING

1. Basis of Design: No 176-8 Gooseneck Outdoor Backstop, manufactured by Porter Athletic Equipment Company.
   a. Support: 5-9/16" diameter, Schedule 40 galvanized steel pipe, powder coated.
      1) Provide safety padding.
   b. Backstop: Rectangular, fiberglass, 42" x 72", Porter Athletic Co. No. 216.
   c. Goal: Heavy Duty Playground Goal, Porter Athletic Co. No. 00251H00.
2. Quantity: 2, see Civil Drawings.
3. Substitutions: See Section 016000 - Product Requirements.

2.05 VOLLEYBALL

A. Standards:
   1. Powr-Trak Universal Sleeve-Type Volleyball standards, No. 01951-000 manufactured by Porter Athletic Equipment Company, Basis of Design.
   2. Volleyball System, No. PVS 500001 manufactured by Draper, Inc.
   3. Performance Sports Systems: Product No. 6100.
   4. Quantity: 2

B. Net:
   1. No. 02255-000 with Boundary Marker with Antenna No. 00546-000 manufactured by Porter Athletic Equipment Company, Basis of Design.
   2. Volleyball System, No. PVS 500001 manufactured by Draper, Inc.
   3. Performance Sports Systems: Product No. 6100.
   4. Quantity: 1

C. Protective Pads:
   1. No. 00717-003 manufactured by Porter Athletic Equipment Company, Basis of Design.
   2. No. 5011XX manufactured by Draper, Inc.
   3. Performance Sports Systems: Product No. 6100.
   4. Quantity: 1 sets

D. Judge's Stand:
   1. Folding Stand No. 00542-150 with protective pads No. 00547-003 manufactured by Porter Athletic Equipment Company, Basis of Design..
   2. No. 5013XX manufactured by Draper, Inc.
   3. Performance Sports Systems: Product No. 6446/6040.
   4. Quantity: 1

E. Storage Rack and Transporter:
   1. No. 00956-100 manufactured by Porter Athletic Equipment Company, Basis of Design..
   2. No. 501016 manufactured by Draper, Inc.
   3. Performance Sports Systems: Product No. 6295.
   4. Quantity: 1

2.06 MISCELLANEOUS

A. Floor Cover and Transport/Storage System, Power Winder, Dust Cover, Tape Applicator:
   1. Floor Cover and Transport/Storage System: No. 02400-012 manufactured by Porter Athletic Equipment Company.
   2. Power Winder: No. 02405-000 manufactured by Porter Athletic Equipment Company.
   3. Dust Cover: No. 92404-000 manufactured by Porter Athletic Equipment Company.
   4. Tape Applicator-Walk Type: No. 02406-300 with case of tape No. 02406-112 manufactured by Porter Athletic Equipment Company.

NOT FOR BIDDING

5. Additional Product Manufacturers: Subject to meeting the requirements specified above the following products are approved:
   a. GymGuard floor cover and storage rack system manufactured by Cover Sports.

B. Scoreboards:
1. Type: Interior, electronic basketball scoreboard with two integral horns and LED displays for time, scores, period, number for player fouling with personal fouls, team fouls, time outs left, bonus and double bonus indicators and next possession arrows; Team Name and Intelligent Captions™ 100% electronic.
   a. Product: Model BB-2155 by Daktronics.
2. Control Console: Wireless, microprocessor based, operator's control center with receiver unit mounted at scoreboard and designed to operate different models of scoreboard by interchange of keyboard overlay.
   a. Product: Model BB-2153-13 as manufactured by Daktronics.

2.07 FLOOR-MOUNTED EQUIPMENT

A. Floor Sleeves for Posts: Metal sleeve, with latch cover, cast into concrete subfloor to hold poles for nets and goals; installed flush with finish floor surface.
1. Latch Cover: Brass, round; tamper resistant lock with key.
2. Sleeve: Aluminum.
3. Depth of Sleeve: 9 inches from floor surface to bottom, including latch cover.

2.08 WALL PADDING

A. Wall Padding: Foam filling bonded to backing board, wrapped in covering; each panel fabricated in one piece.
1. Surface Burning Characteristics: Flame spread index (FSI) of 25 or less, smoke developed index (SDI) of 450 or less, Class A, when tested in accordance with ASTM E84 as a complete panel.
2. Flammability: Comply with NFPA 286.
3. Covering: Vinyl-coated polyester fabric, mildew and rot resistant; stapled to back of board.
   a. Color: As selected from manufacturer's standard range.
   b. Texture: Embossed leather-look.
   c. Fabric Weight: 14 oz/sq yd.
4. Foam: Open cell polychloroprene (Neoprene) 5.5 pcf nominal density.
5. Foam Thickness: 1-1/2 inches.
6. Backing Board: Plywood.
7. Nailing Margins: 1 inch wide, covered by fabric covering.
8. Mounting: Permanent; using screws.

**PART 3 EXECUTION**

3.01 EXAMINATION

A. Take field measurements to ensure proper fitting of work. If taking field measurements before fabrication will delay work, allow for adjustments within recommended tolerances.

B. Inspect areas and conditions before installation, and notify Architect in writing of unsatisfactory or detrimental conditions.

C. Do not proceed with this work until conditions have been corrected; commencing installation constitutes acceptance of work site conditions.

D. Verify that electrical services are correctly located and have proper characteristics.

NOT FOR BIDDING

3.02 INSTALLATION

A. Install in accordance with contract documents and manufacturer's instructions.

B. Coordinate installation of inserts and anchors that must be built in to flooring or subflooring.

C. Install equipment rigid, straight, plumb, and level.

D. Secure equipment with manufacturer's recommended anchoring devices.

E. Install wall padding securely, with edges tight to wall and without wrinkles in fabric covering.

F. Separate dissimilar metals to prevent electrolytic corrosion.

3.03 ADJUSTING

A. Verify proper placement of equipment.

B. Verify proper placement of equipment anchors and sleeves, and use actual movable equipment to be anchored if available.

C. Adjust operating equipment for proper operation; remove and replace equipment causing noise or vibration; lubricate equipment as recommended by manufacturer.

3.04 CLEANING

A. Remove masking or protective covering from finished surfaces.

B. Clean equipment in accordance with manufacturer's recommendations.

3.05 PROTECTION

A. Protect installed products until Date of Substantial Completion.

B. Replace damaged products before Date of Substantial Completion.

**END OF SECTION**

NOT FOR BIDDING

# SECTION 122413
# WINDOW TREATMENT – ROLLER SHADES

## PART 1 - GENERAL

1.01 SECTION INCLUDES

A. Manual roller shades with fascia and light filtering fabric for exterior clear glazed windows and interior vision panels and sidelights as scheduled.

1.02 REFERENCES

A. ASTM G 21 - Standard Practice for Determining Resistance of Synthetic Polymeric Materials to Fungi

B. NFPA 701 - Fire Tests for Flame-Resistant Textiles and Films.

1.03 SUBMITTALS

A. Product data: Provide manufacturer's data sheets on each product to be used, including:
   1. Preparation instructions and recommendations.
   2. Styles, material descriptions, dimensions of individual components, profiles, features, finishes and operating instructions.
   3. Storage and handling requirements and recommendations.
   4. Mounting details and installation methods.

B. Shop Drawings: Show location and extent of roller shades. Include elevations, sections, details, and dimensions not shown in Product Data. Show installation details, mountings, attachments to other Work, operational clearances, and relationship to adjoining work.

C. Samples for Initial Selection: For each colored component of each type of roller shade indicated.

D. Window Treatment Schedule: Submit Window Treatment Schedule using same room designations indicated on Drawings.

E. Maintenance Data: Include in maintenance manuals:
   1. Methods for maintaining roller shades/blinds and finishes.
   2. Precautions about cleaning materials and methods that could be detrimental to fabrics, finishes, and performance.
   3. Operating hardware.

1.04 QUALITY ASSURANCE

A. Installer Qualifications: An experienced installer who has successfully completed and serviced installations similar in scope to that indicated for this Project.

B. Source Limitations: Obtain each type of window treatment through one source from a single manufacturer.

C. Anti-Microbial Characteristics: 'No Growth' per ASTM G 21 results for fungi ATCC9642, ATCC 9644, ATCC9645.

D. Fire-Test-Response Characteristics: Provide window treatment materials with the fire-test-response characteristics indicated, as determined by testing identical products per test method indicated below by UL or another testing and inspecting agency acceptable to authorities having jurisdiction:
   1. Flame-Resistance Ratings: Passes NFPA 701.

E. Mock-Up: Provide a mock-up (manual shades only) of one roller shade assembly for evaluation of mounting, appearance and accessories.

NOT FOR BIDDING

1. Locate mock-up in window designated by Architect.
2. Do not proceed with remaining work until, mock-up is accepted by Architect.

1.05 DELIVERY, STORAGE, AND HANDLING

A. Deliver in factory packages, marked with manufacturer and product name, fire-test-response characteristics, and location of installation using same room designations indicated on Drawings and in window treatment schedule.

1.06 PROJECT CONDITIONS

A. Environmental Limitations: Do not install window treatment until construction and wet and dirty finish work in spaces, including painting, is complete and ambient temperature and humidity conditions are maintained at the levels indicated for Project when occupied for its intended use.

B. Field Measurements: Where roller shades are indicated to fit to other construction, verify dimensions of other construction by field measurements before fabrication, and indicate measurements on Shop Drawings. Allow clearances for operable glazed units' operation hardware throughout the entire operating range. Notify Architect of discrepancies. Coordinate fabrication schedule with construction progress to avoid delaying the Work.

1.07 WARRANTY

A. Products: Minimum 10 years from substantial completion or manufacturer's standard warranty.

B. Installation: One year from substantial completion.

**PART 2 - PRODUCTS**

2.01 MANUAL ROLLER SHADES

A. Basis of specification
1. For base bid:
   a. Draper Shade & Screen Co., Inc.; FlexShade XD ceiling mounted, single shadecloth, with Phifer 4400 3% open or similar.
   b. MechoShade: MechoShade/5 with EuroTwill 6000 ~3% open or similar.
2. Color: One standard color as selected by Architect from manufacturer's standard
3. Rollers: Electrogalvanized or epoxy primed steel or extruded-aluminum tube of diameter and wall thickness required to support and fit internal components of operating system and the weight and width of shade band material without sagging; designed to be easily removable from support brackets; with manufacturer's standard method for attaching shade material. Provide capacity for one roller shade band per roller.
4. Direction of Roll: Regular, from back of roller.
5. Mounting Brackets: Standard 1018 plated steel. Sizes to be compatible with window shade size and clutch capacity. Bracket style to be compatible with mounting requirements and site conditions.
6. Bottom Bar: Steel or extruded aluminum. Provide concealed, by pocket of shade material, internal-type bottom bar with concealed weight bar as required for smooth, properly balanced shade operation.
7. Fascia:
   a. Continuous removable extruded aluminum fascia that attaches to shade mounting brackets without the use of adhesives, magnetic strips, or exposed fasteners.
   b. Fascia shall be able to be installed across two or more shade bands in one piece.
   c. Fascia shall fully conceal brackets, shade roller and fabric on the tube.
   d. Provide bracket / fascia end caps where mounting conditions expose outside of roller shade brackets.

NOT FOR BIDDING

8. Shade Operation: Manual - with continuous loop bead chain, clutch, and cord tensioner and bracket lift operator.
9. Position of Clutch Operator: Right side of roller, as determined by hand of user facing shade from inside, unless otherwise indicated or dictated by field conditions.
10. Clutch: Capacity to lift size and weight of shade; sized to fit roller or provide adaptor.
11. Lift Assist Mechanism: Manufacturer's standard spring assist for balancing roller shade weight and lifting heavy roller shades.
12. Bead Chain: Nickel-plated metal or Stainless steel.
13. Cord Tensioner Mounting: As required per installation.
14. Operating Function: Stop and hold shade at any position in ascending or descending travel.

B. ROLLER SHADE FABRICATION
1. Product Description: Roller shade consisting of a roller, a means of supporting the roller, a flexible sheet or band of material carried by the roller, a means of attaching the material to the roller, a bottom bar, and an operating mechanism that lifts and lowers the shade.
2. Concealed Components: Non-corrodible or corrosion resistant coated materials.
   a. Lifting Mechanism: With permanently lubricated moving parts.
3. Unit Sizes: Obtain units fabricated in sizes to fill window and other openings as follows, measured at 74 deg F:
   a. Shade Units installed outside (typical): If inside mount is required, edge of shade not exceed 1/4 inch from face of jamb.
   b. Fabricate units to completely fill existing openings from head to sill and jamb-to-jamb, unless specifically indicated otherwise.
   c. Fabricate shadecloth to hang flat without buckling or distortion.
4. Installation Brackets: Shall allow for easy removal and reinstallation of shade, operating hardware and for hardware position and shade mounting method indicated.
5. Installation Fasteners: Not fewer than two fasteners per bracket, fabricated from metal non-corrosive to shade hardware and adjoining construction; type designed for securing to supporting substrate; and supporting shades and accessories under conditions of normal use.
6. Colors of Metal and Plastic Components Exposed to View: As selected by Architect from manufacturer's full range, unless otherwise indicated.

**PART 3 - EXECUTION**

3.01 EXAMINATION

A. Examine substrates, areas, and conditions, with Installer present, for compliance with requirements for installation tolerances, operational clearances, and other conditions affecting performance. Proceed with installation only after unsatisfactory conditions have been corrected.

3.02 ROLLER SHADE INSTALLATION AND ADJUSTING

A. Install roller shades level, plumb, square, and true according to manufacturer's written instructions, and located so shade band is not closer than 2 inches to interior face of glass. Allow clearances for window operation hardware.

B. Adjust and balance roller shades to operate smoothly, easily, safely, and free from binding or malfunction throughout entire operational range.

3.03 CLEANING AND PROTECTION

A. Clean roller shade surfaces after installation, according to manufacturer's written instructions.

NOT FOR BIDDING

B. Remove surplus materials, rubbish, and debris resulting from installation upon completion of work, and leave areas of installation in neat, clean condition.

C. Provide final protection and maintain conditions, in a manner acceptable to manufacturer and installer, which ensure that roller shades are without damage or deterioration at time of Substantial Completion.

3.04 SCHEDULE

A. Provide roller shades at the following locations:
   1. All exterior windows, except windows serving corridors, stair towers, gymnasium vestibules, and storage rooms.
   2. All interior vision panels, and side lites as follows:
      a. Between classrooms and corridors
      b. Between offices, conference rooms and corridors.
      c. Note: Transoms and vision panels above 7'-0" a.f.f. do not require window treatments.
   3. Elsewhere as noted on drawings.

**END OF SECTION**

NOT FOR BIDDING

# SECTION 123400
# LAMINATE CLAD CASEWORK

## PART 1 – GENERAL

1.01 SECTION INCLUDES

A. Fixed modular laminate clad casework and components.

1.02 RELATED SECTIONS

A. Section 061000: Blocking within walls where indicated.

B. Section 09 6500 - Resilient Flooring: Base molding.

C. Section 123583: Instrument Storage Casework.

D. Section 123600: Countertops

E. Division 22: Service fixtures, service waste lines, connections, and vents.

F. Division 26: Electrical service fixtures.

1.03 DEFINITIONS

A. Identification of casework components and related products by surface visibility.

1. Open Interiors: Any open storage unit without solid door or drawer fronts, units with full glass insert doors and/or acrylic doors, and units with sliding solid doors.
2. Closed Interiors: Any closed storage unit behind solid door or drawer fronts.
3. Exposed Ends: Any storage unit exterior side surface that is visible after installation.
4. Other Exposed Surfaces: Faces of doors and drawers when closed, and tops of cabinets less than 72 inches above furnished floor.
5. Semi-Exposed Surfaces: Interior surfaces which are visible, bottoms of wall cabinets and tops of cabinets 72 inches or more above finished floor.
6. Concealed Surfaces: Any surface not visible after installation.

1.04 QUALITY ASSURANCE

A. Manufacturer: Minimum of 5 years experience in providing manufactured casework systems for similar types of projects, produce evidence of financial stability, bonding capacity, and adequate facilities and personnel required to perform on this project.

B. Manufacturer: Provide products certified as meeting or exceeding ANSI-A 161.1 testing standards.

C. Fabricator Qualifications (where fabricator is not an approved manufacturer of modular laminate clad casework):

1. Company specializing in fabricating the products specified in this section with minimum ten years of documented experience.
2. Company with at least one project in the past 5 years with value of woodwork within 50 percent of cost of woodwork for this Project.
3. Current accredited, licensed participant in the specified certification program, and maintained throughout the duration of the project.
4. Quality Certification:
   a. Comply with AWI's Quality Certification Program in accordance with requirements for work specified in this section: www.awiqcp.org/#sle.
   b. Contractor, upon award of work, shall register the work under this section with the AWI Quality Certification Program (855-345-0991)
   c. Provide labels or certificates indicating that the installed work complies with AWI/AWMAC/WI (AWS) requirements for grade or grades specified.

NOT FOR BIDDING

d. Submit certifications upon completion of installation that verifies this work is in compliance with specified requirements.

1.05 SUBMITTALS

A. Comply with Section 013000, unless otherwise indicated.

B. Product Data: Manufacturer's catalog with specifications and construction details.

C. Shop Drawings: Indicate dimensions, description of materials and finishes, general construction, specific modifications, component connections, anchorage methods, hardware, and installation procedures, plus the following specific requirements.
   1. Include section drawings of typical and special casework, work surfaces and accessories.
   2. Indicate locations of plumbing and electrical service field connection by others.

D. Component samples: Two sets of samples for each of the following:
   1. Decorative laminate color charts.
   2. PVC edgings.

1.06 MOCK-UP

A. Provide mock-up of typical base cabinet, wall cabinet, and countertop, including hardware and finishes.

B. See Section 014000 - Quality Requirements for additional requirements.

C. Locate where directed.

D. Mock-up may remain as part of the Work.

1.07 PRODUCT HANDLING

A. Deliver completed laminate clad casework, countertops, and related products only after wet operations in building are completed, store in ventilated place, protected from the weather, with relative humidity range of 25 percent to 55 percent.

B. Protect finished surfaces from soiling and damage during handling and installation with a protective covering.

1.08 JOB CONDITIONS

A. Environmental Requirements: Do not install casework until permanent HVAC systems are operating and temperature and humidity have been stabilized for at least 1 week.
   1. Manufacturer/Supplier shall advise Contractor of temperature and humidity requirements for architectural casework installation areas.
   2. After installation, control temperature and humidity to maintain relative humidity between 25 percent and 55 percent.

B. Conditions: Do not install casework until interior concrete work, masonry, plastering and other wet operations are complete.

1.09 WARRANTY

A. All materials and workmanship covered by this section will carry a five (5) year warranty from date of acceptance.

**PART 2 – PRODUCTS**

2.01 ACCEPTABLE MANUFACTURERS:

A. Approved Manufacturers:
   1. Basis of specification: TMI Systems Design Corporation.
   2. Case Systems

NOT FOR BIDDING

B. Substitutions: See Section 016000. Approved fabricators and manufacturers shall comply with the minimum levels of material and detailing indicated on the drawings or as specified.
   1. Fabricators meeting Quality Assurance requirements in PART 1 shall submit evidence of compliance with requirements for approval during bidding.

2.02 MATERIALS

A. Core Materials:
   1. Certified Particleboard: SCS Certified 100% pre-consumer recycled wood fiber particleboard with no Urea Formaldehyde added during the manufacturing process.
      a. Up to 7/8 inch thick: Industrial Grade average 47-pound density meeting ANSI A 208.1-1999, M-3 requirements.
      b. 1 inch think: Industrial Grade average 45-pound density meeting ANSI A 208.1-1999, M-2 requirements.
      c. MR Moisture Resistant Particleboard: Average 47-pound density particleboard, ANSI A208.1 1-1999, M-3.
   2. Medium Density Fiberboard 1/4 inch thick: Average 54-pound density grade, ANSI A208.2.

B. Decorative Laminates: GREENGAURD Indoor Air Quality Certified
   1. High-pressure decorative laminate VGS (.028), NEMA Test LD 3-2005.
   2. High-pressure decorative laminate HGS (.048), NEMA Test LD 3-2005.
   3. High-pressure decorative laminate HGP (.039), NEMA Test LD 3-2005.
   4. High-pressure cabinet liner CLS (.020), NEMA Test LD 3-2005.
   5. High-pressure backer BKH (.048), (.039), (.028), NEMA Test LD3-2005.
   6. Thermally fused melamine laminate, NEMA Test LD 3-2005, color matched with White.

C. Laminate Color Selection: Maximum 4 colors per unit face and 12 colors per project. Refer to Finish Schedule.

D. Edging Materials:
   1. Cabinet Body: 1mm PVC banding, machine applied.
   2. Door and counter edges: 3mm PVC banding, machine applied and machine profiled to 1/8 inch radius.

2.03 SPECIALTY ITEMS

A. Support Members:
   1. Countertop support brackets: Epoxy powder coated, 11 gauge steel with integral cleat mount opening and wire management opening.
   2. Undercounter support frames: Epoxy powder coated.
   3. Table Legs with adjustable foot:
      a. Product: E-Leg, Item No. 635.68.971 manufactured by Hafele.
      b. Height: 28 inches.
      c. Diameter: 2 inches.
      d. Finish: Silver aluminum RAL 9006
      e. Location: School Store, Room B108.

B. Miscellaneous:
   1. Product: Round Grommet A2340 manufactured by TMI Systems.
   2. Diameter: 3-5/8 inches

2.04 CABINET HARDWARE

A. Hinges:

NOT FOR BIDDING

1. Five knuckle, epoxy powder coated, institutional grade, 2-3/4 inch overlay type with hospital tip. 0.095 inch thick. ANSI-BHMA standard A156.9, Grade 1.
   a. Doors 48 inches and over in height have 3 hinges per door.
   b. Magnetic door catch with maximum 5 pound pull provided, attached with screws and slotted for adjustment.

B. Pulls:
1. Stainless Steel Wire Pulls (4 inch).

C. Drawer Slides:
1. Full extension: 150-pound load rated epoxy coated steel, bottom corner mounted with smooth and quiet nylon rollers. Positive stop both directions with self-closing feature.

D. Adjustable Shelf Supports:
1. Injection molded transparent polycarbonate shelf supports friction fit into cabinet end panels and vertical dividers, adjustable. Shelf support have minimum 2 integral support pins to interface pre-drilled holes, and to prevent accidental rotation of support. The support shall adapt to 3/4 inch or 1 inch thick shelving and provides non-tip feature for shelving. Supports may be field fixed if desired. Structural load to 1200 pounds (300 pounds per support) without failure.

E. Locks:
1. Removable core, disc tumbler, cam style lock with strike. Lock for sliding 3/4 inch thick doors is a disc type plunger lock, sliding door type with strike.
2. Elbow catch or chain bolt used to secure inactive door on all locked cabinets.

2.05 FABRICATION:

A. Fabricate casework, countertops and related products to dimensions, profiles, and details shown.
1. Flush Overlay Construction.

B. For casework fabricated by AWI licensed fabricators:
1. Quality Standard: Custom Grade, in accordance with AWI/AWMAC/WI (AWS) or AWMAC/WI (NAAWS), unless noted otherwise.

C. All casework panel components sized/cured to be precisely finished in size and squareness to within 0.010 inches, ensuring strict dimensional quality and structural integrity in the final fabricated product.

D. Cabinet Body Construction:
1. Tops and bottoms shall be glued and doweled to cabinet sides and internal cabinet components such as fixed horizontals, rails and verticals.
   a. Tops, bottoms and sides of all cabinets are particleboard core.
   b. Tops, bottoms and sides of sink base units are moisture resistant particleboard core.
2. Cabinet backs: 1/4 inch thick medium density fiberboard panel fully captured by the cabinet top, bottom and side panels. Finish to match cabinet interior. 3/4 inch x 4 inch particleboard rails will be placed behind the back panel at the top and bottom, and doweled to the sides utilizing 10mm hardwood fluted dowels. A third intermediate rail will be included on all cabinets taller than 56 inches. Utilize hot melt glue to further secure back and increase overall strength.
3. Fixed base and tall cabinets shall have factory mounted bases of 3/4 inch thick exterior grade plywood. Base is nominal 4 inch high unless otherwise indicated on the drawings.

NOT FOR BIDDING

4. Base units, except sink base units: Full sub-top. Sink base units are provided with open top and a stretcher at the front, attached to the sides. Back to be split removable access panel.
5. Side panels and vertical dividers shall receive adjustable shelf hardware. Mount door hinges, drawer slides and pull-out shelves in the line boring for consistent alignment.
6. Exposed and semi exposed edges.
   a. Edging: 1mm PVC.
7. Adjustable shelf core: 3/4 inch thick particleboard up to 36 inches wide, 1 inch thick particleboard over 36 inches wide.
   a. Front edge: 1mm PVC.
8. Interior finish, units with open Interiors:
   a. Top, bottom, back, sides, horizontal and vertical members, and adjustable shelving faces with VGS high-pressure decorative laminate.
9. Interior finish, units with closed Interiors:
   a. Top, bottom, back, sides, horizontal and vertical members, and adjustable shelving faces with thermally fused melamine laminate.
10. Exposed ends:
    a. Faced with VGS high-pressure decorative laminate.
11. Wall unit bottom:
    a. Faced with thermally fused melamine laminate.
12. Balanced construction of all laminated panels is mandatory. Unfinished core stock surfaces, even on concealed surfaces (excluding edges), are not permitted.

E. Drawers:
1. Sides, back and sub front: Minimum 1/2 inch thick particleboard, laminated with thermally fused melamine dovetailed and glued into sides. Top edge banded with 3mm PVC.
2. Drawer bottom: Minimum 1/4 inch thick particleboard laminated with thermally fused melamine, screwed directly to the bottom edges of drawer box.
3. Paper storage drawers: Minimum 3/4 inch thick particleboard sides, back, and sub front laminated with thermally fused melamine. Minimum 1/2 inch thick particleboard drawer bottoms screwed directly to the bottom edges of the drawer box. Provide PVC angle retaining bar at the rear of the drawer.

F. Door/Drawer Fronts:
1. Core: 3/4 inch thick particleboard except at sink units which is 3/4 inch thick moisture resistant particleboard.
2. Provide double doors in opening in excess of 24 inches wide.
3. Faces:
   a. Exterior: VGS High-pressure decorative laminate.
   b. Interior: High-pressure cabinet liner CLS.
4. Door/drawer edges: 1mm PVC, external edges and outside corners machine profiled to 1/8 inch radius.

G. Miscellaneous Shelving:
1. Core material: 3/4 inch or 1 inch thick particleboard.
2. Exterior: VGS High-pressure decorative laminate.
3. Edges: 3mm PVC, external edges and outside corners machine profiled to 1/8 inch radius.

NOT FOR BIDDING

**PART 3- EXECUTION**

3.01 INSPECTION:

A. The casework contractor must examine the job site and the conditions under which the work under this section is to be performed, and notify the building owner in writing of unsatisfactory conditions. Do not proceed with work under this Section until satisfactory conditions have been corrected in a manner acceptable to the installer.

3.02 PREPARATION:

A. Condition casework to average prevailing humidity conditions in installation area prior to installing.

3.03 KEYING:

A. Key alike by room, unless otherwise instructed.

B. Provide locks for each cabinet.

3.04 INSTALLATION:

A. Erect casework, plumb, level, true and straight with no distortion. Shim as required. Where laminate clad casework abuts other finished work, scribe and cut for accurate fit.

B. Adjust casework and hardware so that doors and drawers operate smoothly without warp or bind.
   1. Install drawer pulls horizontally.
   2. Install door pulls vertically.

C. Repair minor damage per plastic laminate manufacturer's recommendations.

D. Install countertop and backsplash.
   1. Scribe and cut for accurate fit to wall and under window stools.
   2. Coordinate openings with grilles supplied in Section 06200.
   3. Provide 1 inch overhang at countertop over lockers.

3.05 CLEANING:

A. Remove and dispose of all packing materials and related construction debris.

B. Clean cabinets inside and out. Wipe off fingerprints, pencil marks, and surface soil etc., in preparation for final cleaning by the building owner.

3.06 COLOR SELECTION:

A. Laminate Color Selection: From Wilsonart, Formica, Nevamar and Chem Metal standard and premium colors.

B. Hinge and Pull Color Selection: From manufacturer's standard

C. Miscellaneous Hardware Color Selection (support brackets, table frames, rail): From manufacturer's standard.

D. 1mm PVC Edge Banding Color Selection: From manufacturer's standard of colors matching decorative laminate.

E. 3mm PVC Edge Banding Color Selection: Match decorative laminate color selection.

**END OF SECTION**

NOT FOR BIDDING

# SECTION 123583
# SPECIALTY CASEWORK

## PART 1 GENERAL

1.01 SECTION INCLUDES

A. Musical instrument storage casework.

1.02 RELATED SECTIONS

A. Section 096500 - Resilient Flooring.

B. Section 123400 - Laminate Clad Casework.

1.03 REFERENCES

A. American National Standards Institute (ANSI):
   1. ANSI A208.1 - Particleboard.

B. American Society of Civil Engineers (ASCE):
   1. ASCE 7 - Minimum Design Loads for Buildings and Other Structures.

C. ASTM International (ASTM):
   1. ASTM C 423 - Standard Test Method for Sound Absorption and Sound Absorption Coefficients by the Reverberation Room Method.
   2. ASTM C 1503 - Specification for Silvered Flat Glass Mirror.
   3. ASTM E 488 - Standard Test Methods for Strength of Anchors in Concrete and Masonry Elements.
   4. ASTM E 795 - Standard Practices for Mounting Test Specimens During Sound Absorption Tests.

D. Audio Engineering Society (AES):
   1. AES-4id - AES information document for room acoustics and sound reinforcement systems -- Characterization and measurement of surface scattering uniformity.

E. Builders Hardware Manufacturers Association (BHMA):
   1. ANSI/BHMA A156.9 - Cabinet Hardware.

F. GREENGUARD Environmental Institute (GEI):
   1. GREENGUARD certified low emitting products.

G. International Electrotechnical Commission (IEC)
   1. Requirements for listing and labeling of products.

H. National Electrical Manufacturers Association (NEMA):
   1. NEMA LD 3 - High Pressure Decorative Laminates.

I. National Fire Protection Association (NFPA):
   1. NFPA 70 - National Electrical Code (NEC).

J. Underwriters' Laboratories, Inc. (UL) and Underwriters' Laboratories of Canada (ULC):
   1. Requirements for listing and labeling of products.

K. U.S. Department of Commerce, National Institute of Standards and Technology (NIST):
   1. DOC PS 1 - U.S. Product Standard for Construction and Industrial Plywood.

1.04 SUBMITTALS

A. Product Data: Manufacturer's data sheets, installation instructions, and maintenance recommendations.

NOT FOR BIDDING

B. Shop Drawings: Prepared by manufacturer. Include elevations showing casework components, details of each condition of installation, and types and locations of hardware and fasteners. Show fabrication and installation details. Include plans, elevations, sections, details, and attachments to other Work.

C. Samples: For each color and finish for each exposed casework component.

D. Operation and Maintenance Data.

E. Warranty: Submit sample meeting warranty requirements of this Section.

1.05 QUALITY ASSURANCE

A. Manufacturer Qualifications: Approved manufacturer listed in this section, with minimum 5 years experience in manufacture of similar products in use in similar environments.

B. Obtain music education casework through one source from a single approved manufacturer.

C. Electrical Components: Listed and labeled per NFPA 70, Article 100, by a testing agency acceptable to authorities having jurisdiction.

1.06 DELIVERY, STORAGE, AND HANDLING

A. Deliver, store, and handle casework in accordance with manufacturer's recommendations. Ship to jobsite only after roughing-in, painting work, and other related finish work has been completed and installation areas are ready to accept casework and recommended temperature and humidity levels will be maintained during the remainder of construction.

1.07 COORDINATION

A. Coordinate installation of blocking and supports in frame wall assemblies under work of other sections where required for anchoring casework.

1.08 WARRANTY

A. Special Warranty: Manufacturer's written warranty indicating manufacturer's intent to repair or replace components of music education storage casework that fail in materials or workmanship within 10 years from date of Substantial Completion. Failures are defined to include, but are not limited to, the following:

1. Fracturing or breaking of casework components including doors, panels, shelves, or hardware resulting from normal wear and tear and normal use other than vandalism.
2. Delamination or other failures of glue bond of components.
3. Warping of casework components not resulting from leaks, flooding, or other uncontrolled moisture or humidity.
4. Failure of operating hardware.

**PART 2 PRODUCTS**

2.01 MANUFACTURERS

A. Acceptable Manufacturer: Wenger Corporation, UltraStor (Basis of Design).

1. Note: Casework Unit designations on Drawings refer to Wenger standard unit sizes.
2. Equivalent Products of the following manufacturers are also approved:
   a. TMI Systems Design Corp.; www.tmisystems.com
   b. Case Systems

B. Requests for substitutions will be considered in accordance with provisions of Division 1 - Product Requirements.

2.02 MATERIALS

A. Materials Meeting Sustainable Design Requirements:

NOT FOR BIDDING

1. No Added Urea Formaldehyde Products: Provide music education storage casework made with composite products and adhesives with no urea formaldehyde added.

B. Particleboard: ANSI A208.1, minimum 43 lb/cu. ft. (689 kg/cu. m) density, composite products and adhesives, with no urea formaldehyde added.

C. Fire Rated Particle Board: ANSI A208.1, minimum 45 lb/cu. ft. (720 kg/cu. m) density ASTM E-84 class 1.

D. Plywood: APA standards PS1-98 section 5.7.4 or 5.7.1 or ANSI /HPVA HP-1-2004 Panel provide with HDF skins to prevent grain telegraphing.

E. Particleboard Thermoset Panels: Particleboard finished with thermally-fused polyester surfacing on both sides meeting performance properties of NEMA LD 3 for VGS grade edge-banded, including the following:
   1. Surface Abrasion Resistance: Taber Wheel, 400 cycles, for solid color.

F. Polyethylene Shelves: High-density, one-piece, blow-molded or polyethylene, with radiused front edge, for abuse-resistant shelves. Same color throughout will not show scratches.

G. PVC Edge Banding: Radiused PVC extrusions, 1/8 inch (3 mm) thick.

2.03 MUSICAL INSTRUMENT STORAGE CASEWORK

A. Basis of Design: UltraStor Storage Cabinets as manufactured by Wenger Corporation. Modular instrument storage casework with integral bases, adjustable levelers, and through-bolted fastening, enabling owner reconfiguration of unit layout.

B. General: Provide through-ventilating instrument storage casework meeting requirements in System Description and Performance Requirements Articles.

C. Side Panels and Divider Panels: Particleboard thermoset panel with no urea formaldehyde added, 3/4 inch (19 mm) thick. Side panels machined to accept unit-to-unit through-bolting.

D. Panel Doors: Particleboard thermoset panel with no urea formaldehyde added, 3/4 inch (19 mm) thick.
   1. Color: As scheduled.

E. Grille Doors: Bright basic steel wire, 5/16 and 3/16 inch (7.9 and 4.8 mm) diameter, with full 360 degree welds at T joints.
   1. Provide for casework indicated.

F. Panel Edge Banding: 3 mm thick, heat-bonded, with radiused and profiled edges and corners.

G. Shelving: Sized with adequate gap between shelving and casework side panels to allow air movement inside casework.
   1. Up to 27 inches (686 mm) wide: Removable molded polyethylene shelf, with impact-resistant, radiused front edge, mounted to cabinet wall with self-locking clip.
   2. Over 27 inches (686 mm) wide: For large instrument casework: Removable formed polyethylene shelf, ribbed, with high-impact-resistant, radiused front edge, supported by steel tube frame.
   3. Tubular steel supports are included for shelves over 19 inches (483 mm) wide.

H. Casework Panel Color: As selected by Architect from manufacturer's standard colors.

I. Butt Hinges: 2-3/4 inches (70 mm), 5-knuckle steel hinges made from 0.090 inch (2.29 mm) thick metal, ANSI/BHMA A156.9, Grade 1, with powder-coated finish, through-bolted to door and side panels and welded to grille door frames. Provide 2 hinges on compartment doors, and 4 hinges on full-height doors.

NOT FOR BIDDING

J. Slide Latch: 0.105 inch (2.67 mm) min. thickness steel, with padlock eye, powder-coat finish, through-bolted to panel door and side panel and welded to grille door frames. Latches securely without padlock. Provide with clear plastic label holder for use with standard size labels; number system available for user to print. Padlocks furnished by Owner.

K. Panel Connectors: 1/4-20 by 1.77 inch (45 mm) panel connectors, with steel thread inserts, powder coated to match panels.

L. Cabinet Levelers: Leveling glides with 3/8 inch (9.5 mm) diameter threaded steel rod in steel corner brackets, minimum two each per cabinet side, accessible from within unit and concealed in completed installation.

M. Carcass joinery includes lag screws powder coated to match substrate.

N. Back panel 7/32 inch (5.6 mm) reinforced with 3/4 inch (19 mm) stretcher panels held in a dado groove and lag screwed in place.

O. Fasteners: Manufacturer-recommended fasteners as required for casework substrate and project performance requirements, consisting of one or more of the following:
   1. Sheet Metal Screws: SAE J78, corrosion-resistant-coated, self-drilling, self-tapping steel drill screws.
   2. Wood Screws: ASME B18.6.1.
   3. Expansion Anchors in Concrete and Concrete Masonry Units: Carbon-steel, zinc plated.
   4. Hardware supplied to anchor the cabinets to the wall and to adjacent casework

P. Finish: Steel Sheet, Steel Wire, and Exposed Fasteners: Urethane-based electrostatic powder coating, color as indicated. Refer to Drawings.

## PART 3 EXECUTION

### 3.01 EXAMINATION

A. Examine casework installation areas for compliance with requirements for installation tolerances, location of blocking and other anchoring reinforcements, and other existing conditions affecting installation and performance of casework. Proceed with casework installation upon correction of unsatisfactory conditions.

### 3.02 CASEWORK INSTALLATION

A. Install plumb, level, and true; using integral levelers. Install in accordance with manufacturer's recommendations and approved submittals.

B. Install hardware uniformly and precisely. Set hinges snug and flat. Adjust and align hardware so moving parts operate freely and contact points meet accurately. Allow for final adjustment after installation.

C. Adjust casework and hardware so doors and drawers operate smoothly without warp or bind and close with uniform reveals.

### 3.03 CLEANING AND PROTECTING

A. Repair or replace defective work as directed by Architect upon inspection.

B. Clean casework surfaces. Touch up, refinish, or replace damaged components in a manner acceptable to Architect.

C. Turn over operation and maintenance instructions to Owner.

**END OF SECTION**

NOT FOR BIDDING

# SECTION 123600
# COUNTERTOPS, BACKSPLASHES AND WINDOW STOOLS

## PART 1 GENERAL

1.01 SECTION INCLUDES

A. Countertops for manufactured casework.

B. Wall-hung counters and vanity tops.

C. Sinks molded into countertops.

D. Solid surface window stools.

1.02 RELATED REQUIREMENTS

A. Section 123400 - Plastic Laminate Casework

B. Section 123583 - Instrument Storage Casework

C. Section 224000 - Plumbing Fixtures: Sinks.

1.03 REFERENCE STANDARDS

A. ANSI A208.1 - American National Standard for Particleboard; 2009.

B. AWI/AWMAC/WI (AWS) - Architectural Woodwork Standards; 2014.

C. AWMAC/WI (NAAWS) - North American Architectural Woodwork Standards, U.S. Version 3.0; 2016.

D. IAPMO Z124 - Plastic Plumbing Fixtures; 2012.

E. ISFA 2-01 - Classification and Standards for Solid Surfacing Material; 2013.

F. NEMA LD 3 - High-Pressure Decorative Laminates; 2005.

G. PS 1 - Structural Plywood; 2009.

1.04 SUBMITTALS

A. See Section 013000 - Administrative Requirements, for submittal procedures.

B. Product Data: Manufacturer's data sheets on each product to be used, including:
   1. Preparation instructions and recommendations.
   2. Storage and handling requirements and recommendations.
   3. Specimen warranty.

C. Shop Drawings: Complete details of materials and installation; combine with shop drawings of cabinets and casework specified in other sections.

D. Selection Samples: For each finish product specified, color chips representing manufacturer's full range of available colors and patterns.

E. Verification Samples: For each finish product specified, minimum size 6 inches square, representing actual product, color, and patterns.

F. Test Reports: Chemical resistance testing, showing compliance with specified requirements.

G. Installation Instructions: Manufacturer's installation instructions and recommendations.

H. Maintenance Data: Manufacturer's instructions and recommendations for maintenance and repair of countertop surfaces.

1.05 QUALITY ASSURANCE

A. Installer Qualifications: Company specializing in performing work of the type specified in this section, with not less than three years of documented experience.

NOT FOR BIDDING

1.06 DELIVERY, STORAGE, AND HANDLING

A. Store products in manufacturer's unopened packaging until ready for installation.

B. Store and dispose of solvent-based materials, and materials used with solvent-based materials, in accordance with requirements of local authorities having jurisdiction.

1.07 FIELD CONDITIONS

A. Maintain environmental conditions (temperature, humidity, and ventilation) within limits recommended by manufacturer for optimum results. Do not install products under environmental conditions outside manufacturer's absolute limits.

**PART 2 PRODUCTS**

2.01 COUNTERTOPS

A. Quality Standard: Custom Grade, in accordance with AWI/AWMAC/WI (AWS) or AWMAC/WI (NAAWS), unless noted otherwise.

B. Plastic Laminate Countertops: High-pressure decorative laminate (HPDL) sheet bonded to substrate.
   1. Laminate Sheet: NEMA LD 3, Grade HGS, 0.048 inch nominal thickness.
      a. Finish: Matte or suede, gloss rating of 5 to 20.
      b. Surface Color and Pattern: As indicated.
   2. Exposed Edge Treatment: 3 mm edge banding, machine applied and machine profiled to 1/8 inch radius. Color as selected from manufacturers standard range of minimum 15 colors.
   3. Back and End Splashes: Same material, same construction.
   4. Wall Protection above Backsplash: Same sheet material without substrate, adhered directly to wall surface as shown.

C. Solid Surfacing Countertops, Window Stools: Solid surfacing sheet or plastic resin casting over continuous substrate.
   1. Flat Sheet Thickness: 1/2 inch, minimum.
   2. Solid Surfacing Sheet and Plastic Resin Castings: Complying with ISFA 2-01 and NEMA LD 3; acrylic or polyester resin, mineral filler, and pigments; homogenous, non-porous and capable of being worked and repaired using standard woodworking tools; no surface coating; color and pattern consistent throughout thickness.
      a. Manufacturers:
         1) Avonite Surfaces: www.avonitesurfaces.com.
         2) Dupont: www.corian.com.
         3) Formica Corporation: www.formica.com.
      b. Sinks and Bowls: Integral castings; minimum 3/4 inch wall thickness; comply with IAPMO Z124.
      c. Finish on Exposed Surfaces: Matte, gloss rating of 5 to 20.
      d. Color and Pattern: As indicated.
      e. Sink size (inside dimensions): 16-1/4" x 12-3/4" x 5-1/4" deep;
         1) oval shape, seamless undermount.
      f. Provide offset overflow elbow connection to drain.
      g. Manufacturers:
         1) KarranUSA, "York" model; www.karran.com, or equivalent approved manufacturer/product.
   3. Other Components Thickness: 1/2 inch, minimum.

NOT FOR BIDDING

4. Exposed Edge Treatment: Built up to minimum 1-1/4 inch thick; eased edge top and bottom.
5. Back and End Splashes: Same sheet material, square top; minimum 4 inches high.
6. Thresholds: As indicated on drawings.

2.02 MATERIALS

A. Wood-Based Components:
1. Wood fabricated from old growth timber is not permitted.
2. Provide sustainably harvested wood, certified or labeled as specified in Section 016000 - Product Requirements.

B. Plywood for Supporting Substrate: PS 1 Exterior Grade, A-C veneer grade, minimum 5-ply; minimum 3/4 inch thick; join lengths using metal splines.

C. Particleboard for Supporting Substrate: ANSI A208.1 Grade 2-M-2, 45 pcf minimum density; minimum 3/4 inch thick; join lengths using metal splines.

D. Adhesives: Chemical resistant waterproof adhesive as recommended by manufacturer of materials being joined.

E. Joint Sealant: Mildew-resistant silicone sealant, clear.

2.03 FABRICATION

A. Fabricate tops and splashes in the largest sections practicable, with top surface of joints flush.
1. Join lengths of tops using best method recommended by manufacturer.
2. Fabricate to overhang fronts and ends of cabinets 1 inch except where top butts against cabinet or wall.
3. Prepare all cutouts accurately to size; replace tops having improperly dimensioned or unnecessary cutouts or fixture holes.

B. Provide back/end splash wherever counter edge abuts vertical surface unless otherwise indicated.
1. Secure to countertop with concealed fasteners and with contact surfaces set in waterproof glue.
2. Height: 4 inches, unless otherwise indicated.

C. Solid Surfacing: Fabricate tops and wall panels up to 144 inches long in one piece; join pieces with adhesive sealant in accordance with manufacturer's recommendations and instructions.

**PART 3 EXECUTION**

3.01 EXAMINATION

A. Do not begin installation until substrates have been properly prepared.

B. If substrate preparation is the responsibility of another installer, notify Architect of unsatisfactory preparation before proceeding.

C. Verify that wall surfaces have been finished and mechanical and electrical services and outlets are installed in proper locations.

3.02 INSTALLATION

A. Securely attach countertops to cabinets using concealed fasteners. Make flat surfaces level; shim where required.

B. Attach plastic laminate countertops using screws with minimum penetration into substrate board of 5/8 inch.

C. Seal joint between back/end splashes and vertical surfaces.

NOT FOR BIDDING

3.03 CLEANING

A. Clean countertops surfaces thoroughly.

3.04 PROTECTION

A. Protect installed products until completion of project.

B. Touch-up, repair or replace damaged products before Date of Substantial Completion.

**END OF SECTION**

NOT FOR BIDDING

# SECTION 124813
# ENTRANCE FLOOR MATS AND FRAMES

## PART 1 GENERAL

1.01 SECTION INCLUDES

A. Carpet mat.

B. Recessed mat frames.

1.02 SUBMITTALS

A. See Section 013000 - Administrative Requirements, for submittal procedures.

B. Product Data: Provide data indicating properties of walk-off surface, component dimensions and recessed frame characteristics.

C. Shop Drawings: Indicate dimensions and details for recessed frame.

D. Samples: Submit two samples, 6 by 6 inch in size illustrating pattern, color, finish, and edging.

E. Maintenance Data: Include cleaning instructions, and stain removal procedures.

1.03 QUALITY ASSURANCE

A. Flammability in accordance with ASTM E648, Class 1, Critical Radiant Flux, minimum 0.45 watts/m2.

B. Slip resistance in accordance with ASTM D2047-96, Coefficient of Friction, minimum 0.60 for accessible routes.

C. Standard rolling load performance is 350 lb./wheel with larger loading requirements as specified (load applied to a solid 5” x 2” wide polyurethane wheel, 1000 passes without damage).

D. Utilize superior structural aluminum alloy 6063-T6 for rail connectors.

## PART 2 PRODUCTS

2.01 MANUFACTURERS

A. Floor Mats:

1. Basis of Design: Construction Specialties, Inc; Entrance Mats, Pedimat M1: www.c-sgroup.com/#sle.
2. Pawling Corporation: www.pawling.com/#sle.
3. Substitutions: See Section 016000 - Product Requirements.

2.02 MATS

A. Carpet Mat: Cut nylon pile permanently bonded to vinyl backing; size as indicated, with one inch black matching vinyl border on all edges.

1. Colors: To be selected by Architect from manufacturer's standard range.
2. Exposed hinge rail connectors: extruded 6063-T6 aluminum, clear anodized.complete with perforations for drainage. Tread rails shall be manufactured from high-impact vinyl/acrylic, complete with co-extruded soft-durometer cushions
3. Tread rails: shall be manufac high-impact vinyl/acrylic, with co-extruded soft-durometer cushions

B. Recessed Frame: 3/4”(19.1mm) deep, 6063-T5 aluminum with 1/4”(6.4mm) wide exposed surface, clear anodized. Provide black vinyl fillers when standard 2” (50.8mm) tread spacing cannot be maintained.

NOT FOR BIDDING

C. Recessed Frame: 1 inch wide zinc exposed top strip, zinc coated steel concealed bottom strip, 1/2 inch deep, with anchoring features.

2.03 FABRICATION

A. Construct recessed mat frames square, tight joints at corners, rigid. Coat surfaces with protective coating where in contact with cementitious materials.

B. Fabricate mats in single unit sizes; fabricate multiple mats where indicated on drawings.

**PART 3 EXECUTION**

3.01 EXAMINATION

A. Verify that floor opening for mats are ready to receive work.

3.02 PREPARATION

A. Mats: Verify size of floor recess before fabricating mats.

B. Vacuum clean floor recess.

3.03 INSTALLATION

A. Install frames to achieve flush plane with finished floor surface.

B. Install walk-off surface in floor recess flush with finish floor after cleaning of finish flooring.

**END OF SECTION**

NOT FOR BIDDING

**SECTION 126113**

**FIXED AUDIENCE SEATING**

## PART 1 – GENERAL

1.01 RELATED DOCUMENTS

A. Drawings and general provisions of the Contract, including General and Supplementary conditions and Division 01 Specification Sections, apply to this Section.

1.02 DEFINITIONS

A. Furnish – supply equipment to the project for use or installation by others.

B. Install – install equipment provided to the project by others.

C. Provide – supply and install equipment.

1.03 WORK INCLUDED

A. Provide fixed theatre seating and related items, as indicated on the drawings, specified here, and as required to complete the installation.

1.04 RELATED WORK

A. Related work which is not part of the Fixed Seating Contract includes, but is not limited to, the following:
   1. Auditorium floors.
   2. Demountable platforms.
   3. Handrails and guardrails.
   4. Electrical services and connections.
   5. Electrical connection to aisle lights.
   6. HVAC System

1.05 ACCEPTABLE MANUFACTURERS

A. The following are acceptable manufacturers:
   1. Irwin Seating Company
      PO Box 2429
      3251 Fruit Ridge Road NW
      Grand Rapids MI 49504
      (616) 784-2881
   2. Ducharme Seating
      9275 Le Royer
      St. Leonard
      Quebec H1P3H7
      (514)-328-1444
   3. Series Seating
      20900 NE 30th Ave, Ste 901
      Miami, FL 33180
      (800) – 706-3598
   4. Hussey Seating Company
      38 Dyer St. Ext.
      North Berwick, ME 03906
      (207) 676-2271

1.06 QUALITY ASSURANCE

A. Product reference: See section 2.1 below and refer to the Design Intent drawings for design details. (if applicable)

NOT FOR BIDDING

B. The installation shall comply with the applicable requirements of the laws, codes, ordinances and regulation of the Federal, State and Municipal authorities having jurisdiction.

C. Seating manufacturer shall verify that minimum clearances shall meet ADAAG (ADA Accessibility Guidelines for Buildings and Facilities) regulations and local code.

1.07 SUBMITTALS

A. If product coordination shop drawings or seating layout review is required more than three times because of seating manufacturer's failure to incorporate earlier comments, all subsequent reviews will be billed on a time and materials basis to the seating manufacturer.

B. Shop drawings shall be of uniform size, bound and include the following:
   1. Title sheet listing all sheets in the submittal.
   2. Scale plans and elevations.
   3. All information necessary to explain fully the design features, appearance, function, fabrication, installation, and use of components in all phases of operation.
   4. Country or origin for equipment not manufactured in the United States.

C. Product coordination shop drawings shall include the following:
   1. Complete plans for all levels indicating dimensions to aisle light sub-ups.
   2. Details showing methods of seat installation and anchorage, relationship to adjacent work and complete setting diagrams.
   3. Detail sections and elevations for each different seat condition, showing back pitch, viewer eye location, and clear distance from adjacent seat or guardrail with the seat both up and down, and (where applicable) the relationship to the adjacent riser or wall.
   4. Hinged end standard details.
   5. Removable seat details, including means of attachment to demountable platforms, if applicable.
   6. Details of aisle lighting connections, including connections for seats on platforms and removable seats.

D. Submit product development samples following approval of product coordination shop drawings. Fabrication shall not commence until the Theatre Consultant, the Architect, and the Owner determine that the product coordination shop drawing and sample are in compliance with the design intent of the Contract Documents.

E. Following approval of the product coordination shop drawings and once accurate as-built field measurements of the seating areas can be obtained, submit the seating layout for approval. The seating layout shall include the following:
   1. Complete seating plans for all levels, showing all seats, seat sizes, locations of base structures, aisle widths, end standards, transfer arms, and aisle lights.
   2. Field measurements and survey information. Seating layout will not be approved unless all dimensions have been field verified.

F. Submit complete manufacturer's product data for all work in this Section, consisting of complete product description and specifications, catalog cuts, laboratory test results, installation instructions, maintenance instructions, and other data required for product approval and use.

G. With Bid, submit the following detail samples for approval:
   1. 8-inch square minimum piece of wood in the species and finish specified, for both solid and laminated applications.
   2. 3-inch square minimum piece of metal in the finish specified.
   3. 12-inch square minimum piece of each fabric type of the material specified.
   4. Seat number and row letter plate.

NOT FOR BIDDING

H. The product development sample shall be complete in every respect, including upholstery and finishes. The architect reserves the right to request replacement samples or portions of the samples until the appropriate party's approval has been obtained. The samples may not be incorporated in the final installation. Samples shall remain the property of the Owner/Operator.

I. Submit written approval of the proposed seating as required from all building, safety, and fire officials and agencies having jurisdiction over the work. Copies of all such approvals shall be delivered to the appropriate party and the Owner prior to installation.

J. Provide an instruction and maintenance manual in a 3-ring binder for the Owner at time of installation. In addition, provide electronic copies on thumb drives for the Owner, Architect and Theatre Consultant. Electronic copies shall be in PDF format. The manual shall include:
   1. Manufacturer and installer contact information.
   2. Spare parts list and source information, including upholstery fabric.
   3. Recommended procedures for cleaning, touch-up and maintenance of all finished surfaces and upholstery, including all precautions against materials and methods which could damage upholstery fabric and/or its fire retardance characteristics.
   4. Catalog cuts for standard equipment
   5. "As-built" drawings showing all seating as installed.

K. Provide a full attic-stock inventory list.

1.08 WARRANTY

A. Warrant the equipment in this Section to be free of defective components, faulty workmanship and improper installation and adjustment for a period of 5 years after acceptance of the completed installation by the Owner. Items showing evidence of defective materials or workmanship shall be repaired and replaced at no cost to the Owner within 15 days of notification. Rectify conditions that might present a hazard to human life or property within 48 hours of notification. The Warranty shall not cover the results of normal use, nor shall it cover damage due to neglect or improper use or vandalism.

**PART 2 – PRODUCTS**

2.01 PRODUCT REFERENCE

A. Product reference for the fixed seating is as follows or equal:
   1. Irwin Seating Model "Davies", which includes the following:
      a. Upholstered, self-rising 3/4 fold seat with black injection molded pan.
      b. No. 91 Millennium molded plastic back with upholstered front.
      c. Maple hardwood end standard No. 17, Radiused, with block front.
      d. Steel center standards.
      e. Standard solid maple hardwood arm rests with comfort curve profile.
   2. Seriis Seating Model "Vera" detailed as described above is a pre-approved equal.
   3. Ducharme Seating Model "Comfort" detailed as described above is a pre-approved equal.
   4. Hussey Seating Company Model "Quattro Traditional" detailed as above is a pre-approved equal.

2.02 METAL COMPONENTS

A. Metal components shall be of sufficient gauge and designed to withstand normal use and abuse.

B. Metal components shall have smooth surfaces, including cut edges. Grind all welded connections smooth. Cut plate parts shall have dressed edges.

C. All exposed metal parts, including bolts and hardware, shall be powder-coated steel with a hybrid thermosetting powder coat finish. The powder coat finish shall be applied by electrostatic means to a thickness of 2 - 2.5 mils, and shall provide a durable coating having a 2H Pencil hardness. Prior to powder coating, metal parts shall be treated with a five-stage

NOT FOR BIDDING

bonderization process for superior finish adhesion, and after coating shall be oven baked to cause proper flow of the epoxy powder to result in a smooth, durable finish.

D. Paint colors shall be determined by the Architect from within Manufacturer's standard color range. Paint application shall be of sufficient film depth to afford wear resistance of institutional quality.

2.03 WOOD

A. Plywood, whether exposed or concealed, shall be hardwood. Plywood shall be hot press laminated (16 plies per inch thickness minimum) using high frequency process. Interior plies shall be Maple, Class 3 or better. Exposed, exterior plies shall be select veneer Maple, Class 1, continuous, and selected as to color. Plies shall be of equal thickness, without voids or defects affecting appearance or performance.

B. Milled maple shall be clear, well-seasoned stock, containing no defects affecting appearance or performance, and shall be selected as to color.

C. Wood species shall be North American Maple.

2.04 WOOD FINISHES

A. All exposed wood parts shall be stained to the color selected by Architect from within the Manufacturer's standard color range and provided with a high-quality furniture finish, produced with two top coats of high density clear lacquer following stroke-sanding of raw wooden parts, sealing, and light preparatory sanding prior to both lacquer top coats. Film depth must be sufficient to afford wear resistance of institutional quality.

B. If field applied, wood finishes shall meet the requirements of Section 01415: VOC Limits for Adhesives, Sealants and Paints. The maximum allowable VOC content for lacquer is 275 grams/liter.

2.05 PADDING

A. Seat and back padding material shall be of new (prime manufacture) closed cell, medium density polyurethane foam. Padding material shall comply with the flammability requirements outlined in the California Technical Information Bulletin #117, Resilient Cellular Materials, Section A & D, dated February 1975, when tested in accordance with Federal Test Method Standard 191, Method 5903.2.

2.06 FABRICS

A. Seat Cushion Upholstery fabric shall be selected from the manufacturer's standard line:

a. Successful bidder shall provide a memo-sized sample booklet for the Architect's use. An 8 inch square minimum fabric sample of the selected fabric shall be submitted with relevant manufacturer and dye lot information.

B. Seat fabric material shall meet Class 1 flammability requirements of the U.S. Department of Commerce Commercial Standard 191-53 per Bulletin #117 and to applicable local codes. (Include Bulletin #133 for Boston or California)

C. Seat fabric shall meet wearability criteria – double rub – Wyzenbeek 100,000, heavy duty test.

2.07 SEAT PANS

A. Seat pans shall be self-rising, gravity return or compression spring.

B. Seat pans will have a variable density foam seat cushion.

C. Seat cushions shall be fully upholstered, with glass-filled, injection molded polypropylene pan fully enclosing the hinge mechanism.

NOT FOR BIDDING

D. Fabric covering sewn into box construction shall be without welts and securely attached without the use of staples, tacks or screws. Lock the first and last 1-1/2 inches of stitching. Fabric shall extend a minimum of 3/8-inch past the stitching.

E. Pivot and stop mechanisms shall be totally enclosed. All stops shall have neoprene pads for quiet operation.

F. Seat pan will have a seat bottom cover. The cover will be removable for authorized maintenance. The cover will be contoured to a shape compatible with the entire design and covered on all exposed surfaces with fabric matching other upholstered components.

G. Foam seat cushions shall be an assembly of five serpentine springs locked to the seat pan. Springs shall be covered with a minimum of 3-1/2 inches of molded polyurethane foam.

H. Seat pans should incorporate seat number identification plates recessed in the leading edge of the plywood reveal. Plates shall be natural satin anodized stamped aluminum with engraved black numbers and concealed/ tamper proof fixation hardware.

2.08 SEAT BACKS

A. Fabricate the chair backs as padded, upholstered components with molded black plastic outer back.

B. Back inside wood upholstery panel shall be of plywood of not less than 5-ply construction and not less than 5/16” thick.

C. Where inside upholstered panels and exposed back panels connect, they shall be formed on the same radius and mounted to each other using concealed fasteners.

D. Foam back cushions shall be minimum of 1½ inches and max of 2 ½ inches thick polyurethane foam cemented to the inside panel and covered with back fabric as outlined above.

E. All plastic component finishes shall matte.

2.09 ARM RESTS

A. Armrests shall be solid Maple as per Architect’s sample and finished to match end standard. Armrests will be mounted onto metal standards. Armrests will have 2 keyhole slots to lock onto dovetail lugs on standards and one security screw.

B. The armrest must be capable of being fitted as a transfer armrest where necessary, as shown on drawings. The shape of these transfer armrests will have no visible difference to the non-transfer armrests. The transfer armrests will have natural satin anodized stamped aluminum plates to identify them with an ADA international insignia. Transfer armrests shall be mounted so that the hinge and hardware are hidden.

C. End-standard armrests shall incorporate concealed aisle lights as described below and located as indicated in Electrical Drawings.

D. End-standard armrests should incorporate row identification plates recessed in arm. Plates shall be natural satin anodized stamped aluminum with engraved black lettering and concealed/ tamper proof fixation hardware.

2.10 STANDARDS

A. Standards shall be floor mount 14-gauge (minimum) steel structure.

B. Center standards shall be modern pedestal welded steel design fabricated of 14-gauge steel to a 1” x 3” vertical rectangular column. Brackets for seat support shall be 7 gauge MIG-welded to pedestal. Wing plates for mounting backs to be 14 gauge steel. A 14 gauge steel foot shall be welded to bottom of column, all around column, and concealed on inside. Any protruding anchorage rod shall be capped with acorn nuts or approved equivalent. The standard shall be

NOT FOR BIDDING

fabricated to be compatible with floor incline and to maintain seat and back height regardless of slopes. Standards shall be painted black.

C. Provide hinged end-standards (transfer arms) where shown on the drawings.

D. End-standards with transfer arms shall be of the same style and construction as normal end-standards with slight modification as necessary to accommodate hinges, floor slopes, and removable seating requirements.

E. End standards shall have row identification plates. Plate finish shall match sample by Architect. (See 2.10.D.)

F. The end panels are to be minimum ¾-inch thick plywood with maple veneer and a 2-inch wide X ¾-inch thick solid block front, and shall be finished to match the back and seat bottom. End panel will be mounted onto metal standards.

2.11 AISLE LIGHTS

A. Aisle lights shall be low voltage LED non-hazardous fixtures, utilizing a miniature element in sufficient quantity to provide adequate illumination (minimum 2/10 foot candle) for floor and steps adjacent to the end-standards. The light assembly shall be recessed under the end-standard armrest, concealed from sight and protected from damage. The standard shall be completely pre-wired with an 18-inch lead extending beyond the standard.

B. Provide each standard with a 18” black flex-steel conduit connector through which the lead passes. Low-voltage cabling may use approved non-steel black flexible sleeving.

C. Provide dimmable transformers, suitably housed in steel safety enclosures and equipped with primary and secondary fuses, terminal blocks, and safety disconnects. The transformers shall be in a remote location, as shown on the Electrical drawings.

D. All electrical components shall be UL approved.

E. Wiring connections from the electrical distribution system to the end standards, as well as installation and connection of the voltage reduction device shall be by the Electrical Contractor.

F. Provide quantity and location of aisle lights as indicated in architectural drawings.

2.12 IMPACT CRITERIA

A. Seats shall be capable of withstanding the repeated impact of a 40-pound sand bag dropped onto the seat pan from a height of 12 inches. The front edge of the seat pan shall not drop more than 3/4 inch.

B. The seats shall be certified to withstand a 600 lbs. static load, laterally distributed three inches from the leading edge of the seat. The seat shall also be certified to pass seat cycle oscillation testing, ASTM Designation F851-87 Test Method for Self-Rising Seat Mechanism, and sandbag testing.

C. Seats shall be capable of withstanding without failure the repeated impact of two 40-pound sand bags suspended 10 inches below the top of the chair back and on both sides of the chair back.

2.13 SEAT NOISE

A. The seats shall be self-rising to the full fold, 90-degree position when unoccupied at all times without adjustment.

B. The self-rising mechanism shall be counterweight type. Down stops shall be cushioned with neoprene. Hardware shall be permanently lubricated. Stops shall be cushioned. Spring hinges are not acceptable.

C. Seat operation shall be nearly silent when the seat bottom returns to its upright position from the down position and when people shift positions while seated in the chair.

NOT FOR BIDDING

2.14 SEATING LAYOUT

A. Provide seats of varying widths with standards in each row spaced laterally so that the end standards will be in alignment from the first to last row, whether aisles are of constant or varying widths. The average seat width shall be at least 21 inches. Seating shall be staggered to optimize sightlines. Seat width distribution and seat quantities indicated on the Seating Drawings (TS-xxx) shall be reviewed and confirmed by the manufacturer.

B. Final seating layout shall be determined based on actual field conditions and measurements. If field conditions warrant a change in the seating layout, the Architect and Theatre Consultant shall be notified before installation. Changes in the layout shall be documented and approved by the Architect and Theatre Consultant prior to installation.

2.15 REMOVABLE SEATS

A. Provide removable seats where shown on the drawings.

B. A maximum of 3 seats shall be ganged.

C. Each removable seat or gang of seats for wheelchair viewing positions shall have self-contained arms.

D. Each removable seat or gang of seats shall have a quick release device for attachment to floor. This shall consist of a thumbscrew and insert with threaded connection.

E. Provide a sled base for each removable seat, or group of seats.

F. The plug and receptacle for removable seats are to be furnished by the Seating Manufacturer and shall be NEMA ML-1P midget locking plugs. They shall be installed by the Electrical Contractor. The manufacturer shall coordinate with the Electrical Contractor, immediately upon receipt of approved shop drawings, the type and quantity of connectors required.

2.16 MAINTENANCE MATERIALS

A. Provide cut and sewn seat and back covers for 1 percent of the seating installed, per venue. Covers shall be produced at the same time, using identical fabric and shall be presented to the Owner upon completion of the seating installation. Cover sizes and colors shall be prorated according to the seating sizes in the final layout.

B. Provide an additional 30 yards per fabric for each type of upholstery, and each type shall be of the same dye lot as the balance of the project.

C. Provide complete spare chairs components for 1 percent of the installed seating, proportional to each configuration of seat supplied (e.g. removable seats, transfer arm seats, 20” seats, 21” seats, 22” seats, balcony back angle seats, orchestra back angle seats, etc.), with a minimum of 10 chairs per type/size, and a minimum of 1 piece per component.

**PART 3 - EXECUTION**

3.01 PREPARATION

A. Before beginning the installation, check all construction and substrate materials to receive the seating to assure that they are sound, rigid, properly sized and located, level (or properly sloped), plumb and square, and that there is nothing to prevent proper and timely execution of the installation. All overhead work, including painting, staining, and finishing shall be finished prior to start of chair installation. Concrete floors shall have a clear 3” of 3000 psi concrete above top of metal deck fluting.

B. Do not proceed until unsatisfactory conditions have been corrected. Start of work shall indicate acceptance of the substrate and surrounding conditions.

3.02 PROTECTION OF EQUIPMENT

NOT FOR BIDDING

A. Protect the materials in this Section from soiling and damage during all phases of the work, from the time of manufacture to installation.

B. Cover the seats to protect them from dust, paint, and debris as required during and after installation.

3.03 COORDINATION

A. The Contractor is responsible for reviewing all drawings, specifications, and field conditions which affect the work in this Section. Notify the Architect whenever field measurements, analysis of the drawings and specifications, or progress of other trades indicates that the work in this Section cannot be completed as specified or as scheduled.

B. Within 6 weeks of the award of contract, and prior to the preparation of shop drawings, the Fixed Theatre Seating Contractor shall submit a written review of related work as it appears on the Contract Documents. The review shall identify errors, omissions or obstructions related to the installation and operation of the equipment in this Section. The sole intent of this written review is to identify potential problems as soon as possible. It is understood that some errors, omissions or obstructions may not be evident until the Contractor prepares shop drawings.

3.04 INSTALLATION

A. Installation shall be by the manufacturer or an authorized dealer or agent of the manufacturer. All installation work shall be carried out under the supervision of a capable superintendent experienced in the installation of seating of similar type and quality.

B. Coordinate the installation schedule as required with related trades.

C. Coordinate the cutting and coring of air supply and return holes with related trades, if applicable.

D. Commencement of installation means acceptance of site conditions.

E. The installation shall conform to the approved shop drawings and layout drawings and to the printed installation instructions of the manufacturer.

F. Floor anchorages shall be of sufficient strength and capacity to assure safe, rigid, and permanent attachment.

G. All related work for installation, such as drilling, coring, and cutting through finish floor materials in place at the time of installation shall be done as work of this Section.

H. Upon completion of the installation, adjust all operating parts and assemblies for proper quiet operation. Clean and polish all exposed surfaces.

I. Adjust seats as required to assure that seats in each row are aligned when in upright position.

3.05 CLEANING AND REPAIR

A. Remove all cartons, wrappings and debris associated with the installation from the building and legally dispose of same.

B. Upon completion of the installation, touch-up all marred finishes with coating to match factory-applied finish. Replace any unit whose finish cannot be restored to high quality appearance, in the opinion of the Architect and Theatre Consultant.
If field applied, wood finishes shall meet the requirements of Section 01415: VOC Limits for Adhesives, Sealants and Paints. The maximum allowable VOC content for lacquer is 275 grams/liter.

C. Replace upholstery which has been damaged in installation. Replacement of upholstery shall not deplete the extra materials stock.

D. Upon completion of the installation, leave all areas of installation broom clean.

NOT FOR BIDDING

3.06 DEMONSTRATION

A. Installed seating shall be inspected for quality by the Owner, the Architect and the Theatre Consultant.

B. Any necessary adjustments or modifications shall be made as required to comply with approved shop drawings.

C. Owner's designated staff or representatives shall be instructed in the care and maintenance of all items.

D. Tests and instruction to be scheduled in conformance with project construction schedules and the availability of the Owner, the Architect, the Acoustics Consultant, and the Theatre Consultant, pending on-time approvals of all prior requirements.

E. Cost of reinspection and additional testing by the Architect or the Theatre Consultant, if required due to lack of completion and/or errors and omissions made by the manufacturer or installer shall be paid by the Seating Contractor or the General Contractor respective to the area of work concerned. This work will be conducted on a time and materials basis, including the Architect's and the Theatre Consultant's standard hourly rates, and shall be scheduled and approved in writing prior to the reinspection/testing session between 1) the Architect, the Theatre Consultant and the Owner, and 2) the Owner and the contractor(s).

**END OF SECTION**

NOT FOR BIDDING

# SECTION 126613
# TELESCOPING BLEACHERS

## PART 1 GENERAL

1.01 SECTION INCLUDES

A. Telescoping bleachers.

B. Electric motor operators, controls, and internal wiring.

1.02 RELATED REQUIREMENTS

A. Section 262726 - Wiring Devices: Key-operated wall switch(es).

B. Section 262717 - Equipment Wiring: Connection of electric motors and controls.

1.03 REFERENCE STANDARDS

A. NFPA 102 - Standard for Grandstands, Folding and Telescopic Seating, Tents and Membrane Structures; National Fire Protection Association; 2011.

B. PS 1 - Structural Plywood; 2007.

C. AWS D1.1/D1.1M - Structural Welding Code - Steel; American Welding Society; 2010.

D. AWS D1.3 - Structural Welding Code - Sheet Steel; American Welding Society; 2008.

1.04 SUBMITTALS

A. See Section 013000 - Administrative Requirements, for submittal procedures.

B. Product Data: Manufacturer's data sheets on each product to be used, including:
   1. Preparation instructions and recommendations.
   2. Storage handling and requirements.
   3. Installation methods.

C. Shop Drawings: Complete layout with dimensions, seat heights, row spacing and rise, aisle widths and locations, points of connection to substrate, assembly dimensions, and material types and finishes.
   1. Provide drawings customized to this project.
   2. Include Professional Engineer certification.
   3. Wiring Diagrams: Show locations of motors, electrical wiring, and rough-in connections.

D. Selection Samples: For each material for which color selection is required, submit samples, 2 by 2 inches in size, illustrating colors and finishes available.

E. Installer Qualifications: Installer qualifications indicating capability, experience, and official Certification Card issued by manufacturer of telescopic seating.

F. Warranty: Submit manufacturer warranty and ensure that forms have been completed in Owner's name and registered with manufacturer.

1.05 QUALITY ASSURANCE

A. Manufacturer Qualifications: Company specializing in manufacturing products specified in this section, with not less than three years of documented experience.

B. Installer Qualifications: Manufacturer's installation crew.

C. Welder Qualifications: Certified by AWS for the process employed.

1.06 DELIVERY, STORAGE, AND HANDLING

A. Store, in original packaging, under cover and elevated above grade.

NOT FOR BIDDING

1.07 WARRANTY

A. See Section 01 7800 - Closeout Submittals, for additional warranty requirements.

B. Correct defective Work within a five year period after Date of Substantial Completion. Replace parts that fail under normal use at no extra charge to Owner.

**PART 2 PRODUCTS**

2.01 MANUFACTURERS

A. Telescoping Bleachers:
   1. Interkal LLC, Forward fold series with Vari-Row and Comfort Seat Module: www.interkal.com.
   2. Irwin Telescopic Seating Company; 5000 series with Modular Deck Units and Infinity Seat Module : www.irwintelescopicseating.com.
   3. Hussey Seating Company, MAXAM Telescopic Gym Seat System: www.husseyseating.com.
   4. Substitutions: See Section 016000: Materials and Equipment.

2.02 TELESCOPING BLEACHERS

A. Telescoping Bleachers: Factory assembled tiered benches that retract horizontally into depth approximately the same as a single row depth, with fixed seats mounted on leading edge of platforms.
   1. Provide a design certified by a licensed Professional Engineer licensed in Delaware.
   2. Provide a design that has been in use for at least 5 years; submit documentation.
   3. Design to comply with applicable requirements of NFPA 102 and requirements of code authorities having jurisdiction; where conflicts between requirements occur, comply with whichever is more stringent.
   4. Design with solid fascia (riser) or seat fronts that conceal interior mechanisms when fully retracted, fitting tightly enough to prevent climbing up face; at front row provide key locked, hinged fascia (skirt) to cover gap between seat riser/fascia and floor.
   5. Configurations: As indicated on Contract Drawings.
   6. Wheelchair spaces: Allow portions of first row, as indicated, to be manually retracted without affecting other rows; provide removable railings at row two behind wheelchair spaces.
   7. Cutouts: Fit units to irregular wall surfaces, columns, pilasters, roof drain leaders, and other obstructions; take field measurements prior to fabrication.
   8. Operation: Motor operated.

B. Design Loads: Design to withstand the following loading conditions:
   1. Live Load on Structural Supports: 100 psf, minimum, of gross horizontal projection.
   2. Live Load on Seats and Walking Surfaces: 120 pounds per linear foot.
   3. Lateral Sway Stress on Structural Supports: 24 pounds per linear foot of seat plank.
   4. Perpendicular Sway Stress on Structural Supports: 10 pounds per linear foot of seat plank.

C. Dimensions:
   1. Rows: See Drawings.
   2. Rise Per Row: 11-5/8 inches typical.
   3. Row Depth: 22 inches.
   4. Seat Height Above Tread: 6 inches.

NOT FOR BIDDING

D. Structural Supports: Steel or aluminum; manufacturer's standard wheeled carriages supporting each tier separately, with moving parts permanently lubricated and metal parts cushioned to prevent metal-to-metal contact during operation.
   1. Design so that each row carriage so that it will individually support the design loads and is self supporting when fully assembled without dependence on platform panels or boards, seats, or fascia.
   2. Welding: In accordance with AWS D1.1 and AWS D1.3.
   3. Bolting: Use lock-washers or locknuts.
   4. Wheels: Minimum 5 inch diameter by 1-1/8 inch wide, with non-marring rubber tires; ball, roller, or oil-impregnated metal bearings; minimum of 2 wheels at each floor support.
   5. Finish: Manufacturer's standard enamel or powder coating.
   6. Row Locking: Automatically mechanically lock each carriage to adjacent carriages when fully extended.
   7. Unlocking: Automatically unlock all rows before engaging retraction mechanism.

E. Motor Operation: Manufacturer's standard drive mechanism, using motor adequately sized for the purpose.
   1. All electrical components and wiring UL listed.
   2. Controls: Start, Stop, Forward, and Reverse in a single control unit.
   3. Control Station: Removable plug-in low voltage pendant station, with first-row plug-in location for each motor.
   4. Limit Switches: Automatically stop operation when unit has reached fully open or fully closed position.
   5. Provide all wiring internal to bleacher units, to junction box located where indicated; ensure that wiring is not energized except during operation.
   6. Electrical Characteristics: 1/2 hp, 120/208V, three phase, 60 Hz.
   7. Provide access to motor from front side of bleachers; a hinged front skirt or hinged section at least 30 inches wide is acceptable.

2.03 SEAT AND PLATFORM COMPONENTS

A. Seat/Fascia Assembly: Continuous, molded UV-stabilized high-density polyethylene plastic, seat minimum 1 inch thick, textured finish, homogeneous color throughout, color as selected from manufacturer's standard selection; approximately 18 inch long sections independently removable with tongue-and-groove or rabbeted interlock at end joints.
   1. Shape: Ergonomically contoured, with internal ribs spaced for natural flexibility; rear edge cantilevered to provide toe room of not less than 3 inches; no openings to trap debris.
   2. Provide seats with back supports as shown.
   3. Provide end caps of same material and finish on each exposed end.
   4. Supports: Internal steel reinforcement of each seat segment bolted to platform nose member; minimum two bolts per segment.

B. Platform, Tread, and Step Structure: Plywood continuously supported on front and rear with side joints tongue-and-grooved.
   1. Plywood: PS 1, 5-ply BC grade polyethylene-top-coated tongue and groove Douglas Fir plywood.
      a. Polyethylene overlay bonded to substrate, 0.03 inch (0.8 mm) thickness.
      b. Color: as selected by Architect from manufacturers standard colors.
      c. Plywood Thickness: 3/4 inch., minimum.

NOT FOR BIDDING

2. Front (Nose), Rear, and Intermediate Supports: Steel channel or tube, hot-dipped galvanized.
3. Provide end caps of same material and finish on each exposed end.
4. Nosings: Extruded aluminum; clear anodized finish.
5. At aisles provide permanently attached intermediate steps of same construction and finish.
6. At bottom of aisles provide step in front of first riser, hinged to first platform to fold for storage.

2.04 HANDRAILS AND RAILINGS

A. Provide the following railings:
   1. Aisle Handrails: Self storing railing segment mounted in center of aisle at every other row beginning at row 2.
   2. End of Row Guardrails: Self-storing, at open ends of sections beginning at row 2.
   3. Height: 42 inches above adjacent platform or tread.

B. Design handrails and railings to withstand the following loads:
   1. Concentrated load on Handrails: of 200 pounds applied at any point and in any direction.
   2. Live Load on Handrails: Uniform load of 50 lbs. per foot applied in any direction
   3. Concentrated Load on Guardrails: 200 pounds in any direction along top rail.
   4. Live Load on Guardrails:
      a. Horizontal: 50 pounds per linear foot, applied at the guardrail height.
      b. Vertical: 100 pounds per linear foot, applied vertically to top of guardrail.

C. Railing Construction: Round steel pipe or tube, with formed elbows at corners and caps at ends of straight runs.
   1. Steel: 1-1/2 inch minimum outside diameter, with 11 gage minimum wall thickness; textured powder coat epoxy finish.

2.05 ACCESSORIES

A. Flex-Row: Provide first row modular recoverable seating units to be utilized by persons in wheelchairs and able-bodied persons. Each unit shall have an unlock handle for easy deployment if wheelchair or team seating access is needed. Unlock handle shall lock the bleacher seats into position when fully opened.
   1. Provide a black full-surround steel skirting with no more than ¾" floor clearance for safety and improved aesthetics.
   2. Provide a black injection molded end cap for the nose beam for safety and improved aesthetics.
   3. Provide a mechanical positive lock when the Flex-Row system is in the open and used position.

B. Fillers and Closures:
   1. Ends of Retracted Units: Plywood panels, finished to match platforms.
   2. Sides of Extended Units: Vinyl curtains.
   3. Vinyl Curtains: 18 ounce vinyl with grommets; standard color as selected by Architect.

C. Extended Rear Deck Filler: Provide an extended rear deck filler mounted between rear wall building columns. Provide appropriate sized rear filler on each bleacher to allow for a continuous row of seating at the top row.

D. Fasteners: Provide hardware and fasteners in accordance with manufacturer's recommendations.

NOT FOR BIDDING

E. Anchorage: As indicated on drawings; provide hardware in accordance with manufacturer's recommendations.

**PART 3 EXECUTION**

3.01 EXAMINATION

A. Verify that field measurements are consistent with those on the shop drawings.

B. Verify that electrical rough-ins have been installed and are accessible.

C. Do not begin installation until substrates have been properly prepared and area has been cleared of obstructions.

D. If substrate preparation is the responsibility of another installer, notify Architect of unsatisfactory preparation before proceeding.

3.02 PREPARATION

A. Clean surfaces thoroughly prior to installation.

B. Prepare surfaces using the methods recommended by the manufacturer for achieving the best result for the substrate under the project conditions.

3.03 INSTALLATION

A. Install in accordance with manufacturer's instructions.

B. Do not field cut or alter seats, fascia, or structural members without approval.

C. Provide manufacturer's field representative to inspect completed installation.

3.04 ADJUSTING

A. Lubricate, test, and adjust each moving assembly to ensure proper operation in compliance with manufacturer's recommendations.

3.05 CLEANING

A. Clean exposed and semi-exposed assembly surfaces.

B. Touch up finishes on damaged or soiled areas.

3.06 CLOSEOUT ACTIVITIES

A. Demonstration and Training: Provide manufacturer's field representative to demonstrate to and train Owner's operating personnel in proper operation of equipment.

1. Location: On site using installed equipment.
2. Time: As agreed between Owner and Contractor.
3. Include video recording of training activities on DVD.

3.07 PROTECTION

A. Protect installed products until completion of project.

B. Touch-up, repair, or replace damaged products before Substantial Completion.

**END OF SECTION**

NOT FOR BIDDING

# SECTION 129300
# SITE FURNISHINGS

## PART 1 GENERAL

1.01 SECTION INCLUDES

A. Bicycle racks.

B. Removable Bollards

1.02 RELATED REQUIREMENTS

A. Section 033000 - Cast-in-Place Concrete: Mounting surface for bicycle racks.

1.03 REFERENCE STANDARDS

A. ASTM A36/A36M - Standard Specification for Carbon Structural Steel; 2014.

B. ASTM A53/A53M - Standard Specification for Pipe, Steel, Black and Hot-Dipped, Zinc-Coated, Welded and Seamless; 2012.

C. ASTM A500/A500M - Standard Specification for Cold-Formed Welded and Seamless Carbon Steel Structural Tubing in Rounds and Shapes; 2013.

1.04 SUBMITTALS

A. See Section 013000 - Administrative Requirements, for submittal procedures.

B. Product Data: Manufacturer's data sheets on each product to be used, including:
   1. Preparation instructions and recommendations.
   2. Storage and handling requirements and recommendations.
   3. Installation methods.

C. Shop Drawings: Indicate size, shape, and dimensions, including clearances from adjacent walls, doors, and obstructions.

D. Selection Samples: For each finish product specified, color chips representing manufacturer's full range of available colors and patterns.

1.05 DELIVERY, STORAGE, AND HANDLING

A. Store products in manufacturer's unopened packaging until ready for installation.

B. Handle racks with sufficient care to prevent scratches and other damage to the finish.

## PART 2 PRODUCTS

2.01 MANUFACTURERS

A. Outdoor Bicycle Racks:
   1. Secure Site Design, LLC: http://www.securesitedesign.com
   2. Substitutions: See Section 016000 - Product Requirements.

B. Decorative Removable Bollards:
   1. Landscape Forms, Inc.: http://www.landscapeforms.com
   2. Substitutions: See Section 016000 - Product Requirements.

2.02 BICYCLE RACKS

A. Outdoor Bicycle Racks:
   1. Product: Secure Site Design BRWS-101.
   2. Description: Single wide loop bike rack constructed of 2-3/8 in. (60mm) OD tubular steel pipe. 2 3/8” OD tubular steel.
   3. Mounting, Ground: In-ground anchor.

NOT FOR BIDDING

4. Finish: Powder coat, maintenance-free and weather-resistant.
5. Color: As selected by Architect from manufacturer's complete range.
6. Accessories: In-ground grout cover.

B. Materials:
1. Pipe: Carbon steel, ASTM A53/A53M, Schedule 40.
2. Tube: Carbon steel, ASTM A500/A500M.
3. Bar, Round and Flat, Carbon Steel: ASTM A36/A36M.

2.03 DECORATIVE REMOVABLE BOLLARDS

A. Decorative Removable Bollards:
1. Product: Landscape Forms "Annapolis" Bollards
2. Size: 6 inch nominal diameter
a. Outer Diameter Pipe Size: 6.625 inches.
b. Wall Thickness: 0.280 inches.
3. Mounting:
a. Removable with embedded socket

B. Materials:
1. Bollard Tube: Structural steel tube, ASTM A 500, Grade B.
2. Bollard Top: Aluminum casting.
3. Cover Ring: Spun aluminum, type 5052-H32, 0.160 thickness.
4. Removable Bollard Socket: All socket components except the bottom cap are hot dip galvanized.
a. Tube:
1) Structural steel tube, ASTM A 500, Grade B.
2) Nominal Pipe Size: 8 inches (8.625-inch outside diameter by 0.322-inch wall thickness).
b. Cover Plate: 2-piece, 1/4-inch carbon steel plate, stores in socket.
5. Removable Bollard Latching Mechanism:
a. Latch: 1/8-inch, Type 304 stainless steel.
b. Latch Pin: 1/4-inch diameter by 1/2-inch stainless steel clevis pin with cotter ring.
c. Latch Mounting Bracket: 3/16-inch thick by 1.00-inch, Type 304 stainless steel bar.
d. Lock:
1) CompX Fort Lock #MFWDS23078-221 keyed alike.
2) Keys: 2, brass.
6. Finish on Metal, Except Removable Bollard Socket:
a. Primer: Rust inhibitor.
b. Topcoat: Thermosetting polyester powder coat. UV, chip, and flake resistant.
c. Color: As selected by Architect from manufacturers full range.

**PART 3 EXECUTION**

3.01 EXAMINATION

A. Examine surfaces to receive site accessories.

B. If substrate preparation is the responsibility of another installer, notify Architect of unsatisfactory preparation before proceeding.

C. Do not begin installation until unsatisfactory substrates have been properly repaired.

3.02 PREPARATION

A. Ensure surfaces to receive site accessories are clean, flat, and level.

NOT FOR BIDDING

3.03 INSTALLATION - BICYCLE RACKS

A. Install in accordance with manufacturer's instructions.

B. Install bicycle racks level, plumb, square, and correctly located as indicated on drawings.

C. In-Ground Anchor Installation:

1. Prepare holes in size according to manufacturer's instructions.
2. Place anchoring bolts through the holes in the pipe.
3. Lower rack into holes, ensuring the bottom of lower bends are at least 1-1/2 inch from the ground.
4. Pour concrete and level rack.
5. Support until dry.

3.04 INSTALLATION - BOLLARDS

A. Install in accordance with manufacturer's instructions.

B. Install bollards plumb.

C. Embed sockets for removable bollards securely in concrete.

3.05 CLEANING

A. Clean installed work to like-new condition. Do not use cleaning materials or methods that could damage finish.

3.06 PROTECTION

A. Protect installed products until completion of project.

B. Touch-up, repair or replace damaged products before Date of Substantial Completion.

**END OF SECTION**

NOT FOR BIDDING

# SECTION 142013
# HYDRAULIC HOLELESS PASSENGER ELEVATOR

## PART 1 GENERAL

1.01 SECTION INCLUDES

A. Complete elevator systems and installation.

1.02 RELATED SECTIONS

A. Division 1 - Temporary Facilities and Controls: Temporary power supply.

B. Section 03 3000 - Cast-in-Place Concrete: Elevator pit foundation.

C. Section 04 2000 - Unit Masonry Assemblies: Masonry hoistway enclosure; building in and grouting hoistway door frames.

D. Section 05 5000 - Metal Fabrications: Pit ladder, Sill supports, sump provers and overhead hoist beams.

E. Section 07 1353 - Sheet waterproofing of elevator pit walls and floor.

F. Division 21 - Fire Suppression Sprinklers: Sprinkler heads in hoistway.

G. Division 22 - Plumbing Equipment: elevator sump equipment.

H. Division 26 - Electrical service for elevators to and including shunt trip, breaker, disconnect switches at machine room door.

I. Division 27 - Voice and Data Communicatoin Cabling for telephone service to elevators.

J. Division 28: "Fire Alarm" for heat detectors in shafts and machine rooms to disconnect power from elevator equipment before sprinkler activation and for connection to elevator controllers.

K. Division 28: "Access Control" for card readers at elevator call stations.

1.03 REFERENCES

A. All current applicable codes including IBC, NFPA 101 and ANSI A117.1/ADAAG and State ADA requirements.

B. ASME A17.1 - Safety Code for Elevators and Escalators; The American Society of Mechanical Engineers, current edition adopted by Authority Having Jurisdiction.

C. ASME A17.2 - Guide for Inspection of Elevators, Escalators, and Moving Walks; The American Society of Mechanical Engineers, current edition adopted by Authority Having Jurisdiction.

D. DSFPR Part 5, Chapter 1, Section I-15.1*: All passenger elevators in a building shall be provided with a cab sized to accommodate an ambulance cot 24 inches by 76 inches in its horizontal open position.

1. the words "to accommodate" in this context is intended to mean the cot is in the horizontal position and shall travel in to the elevator without having to modify the position. Additionally once the cot is in place in the cab, there should be room for at least two (2) EMS attendants.

1.04 SUBMITTALS

A. See Division 1 for submittal procedures.

B. Submit shop drawings. Indicate the following information:

1. Locations of machine room equipment: driving machines, controllers, governors and other component.

NOT FOR BIDDING

2. Hoistway components: Car, counterweight, sheaves, machine and sheave beams, guide rails, buffers, ropes, and other components.
3. Rail bracket spacing; maximum loads imposed on guide rails requiring load transfer to building structural framing.
4. Individual weight of principal components; load reaction at points of support.
5. Clearances and over-travel of car and counterweight.
6. Location and sizes of access doors, doors, and frames.
7. Applicable seismic design data.
8. Interface with building security system.
9. Electrical characteristics and connection requirements.

C. Show arrangement of equipment in machine room so equipment can be removed for repairs or replaced without disturbing other components. Arrange equipment for clear passage through access door.

D. Submit product data. Provide data on the following items:
1. Signal and operating fixtures, operating panels, indicators.
2. Cab design, dimensions, layout, and components.
3. Cab and hoistway door and frame details.
4. Electrical characteristics and connection requirements.

E. Samples: For initial selection, submit samples from manufacturer's standard selection. For verification, submit two samples, 3" square of sheet material or 4" length of running trim illustrating cab interior finishes, cab and hoistway door and frame finishes, and handrail material and finish.

F. Manufacturer Certificates: Signed by elevator manufacturer certifying that hoistway, pit, and machine room layout and dimensions, as shown on Drawings, and electrical service, as shown and specified, are adequate for elevator system being provided.

G. Maintenance Data. Include:
1. Parts catalog with complete list of equipment replacement parts; identify each entry with equipment description and identifying code.
2. Technical information for servicing operating equipment.
3. Legible schematic of hydraulic piping and wiring diagrams of installed electrical equipment and changes made in the Work. List symbols corresponding to identity or markings on machine room and hoistway apparatus.

H. Maintenance Tools and Diagnostic Equipment:
1. It is the intent of this specification to allow for the Owner's non-proprietary maintenance of elevators and equipment.
2. Where specialized diagnostic tools or equipment are required in order to maintain elevator and elevator equipment, provide these tools and equipment to the Owner at project closeout.
3. Include diagnostic software, access codes, passwords and other proprietary information as necessary in order to interface with elevator equipment.

1.05 QUALITY ASSURANCE

A. Perform Work in accordance with applicable code and as supplemented in this section.

B. Manufacturer Qualifications: Company specializing in manufacturing the Products specified in this section with minimum ten years documented experience.

C. Installer Qualifications: Company specializing in performing the work of this section and approved by elevator equipment manufacturer.

NOT FOR BIDDING

D. Regulatory Requirements: Comply with ASME A17.1 and elevator design requirements for earthquake loads in ASCE 7. Peale velocity acceleration (Av) Spectral response acceleration (Sds) /seismic design category to meet requirements for Odessa Campus zip code 19734.
   1. Elevator importance factor is 1.

E. Source Limitations: Obtain elevators through one source from a single manufacturer.
   1. Provide major elevator components, including pump-and-tank units,plunger-cylinder assemblies, controllers, signal fixtures, door operators, car frames, cabs, and entrances manufactured by a single manufacturer
   2. Where required to meet non-proprietary maintenance requirements, alternative manufacturers will be considered provided the basis-of-design manufacturer requirements are met.

F. Accessibility Requirements: Comply with Section 4.10 in the U.S. Architectural & Transportation Barriers Compliance Board's "Americans with Disabilities Act (ADA), Accessibility Guidelines for Buildings and Facilities (ADAAG).

G. Fire-Rated Hoistway Entrance Assemblies: Door and frame assemblies complying with NFPA 80 that are listed and labeled by a testing and inspecting agency acceptable to authorities having jurisdiction, for fire-protection ratings indicated, based on testing at as close to neutral pressure as possible according to NFPA 252.

1.06 DELIVERY, STORAGE, AND HANDLING

A. Deliver, store, and handle materials, components and equipment in manufacturer's protective packaging.

B. Store materials, components, and equipment off of ground, under cover, and in a dry location. Handle according to manufacturer's written recommendations to prevent damage, deterioration, or soiling.

1.07 COORDINATION

A. Coordinate installation of sleeves, block outs, and items that are embedded in concrete or masonry for elevator equipment. Furnish templates and installation instructions and deliver to Project site in time for installation.

B. Coordinate sequence of elevator installation with other work to avoid delaying the Work.

C. Coordinate locations and dimensions of other work relating to hydraulic elevators including pit ladders, sumps, and floor drains in pits; entrance subsills; and electrical service, electrical outlets, lights, and switches in pits and machine rooms.

1.08 PRE-INSTALLATION MEETING

A. Review schedule of installation, installation procedures and conditions, and coordination with related work.

1.09 WARRANTY

A. See Division 1 Section - Closeout Procedures, for additional warranty requirements.

B. Provide full parts and labor warranty for period specified below.
   1. Warranty Period: Two (2) years from date of Substantial Completion.

1.10 MAINTENANCE SERVICE

A. Owner/User training: Provide digital video recorded training session for routine maintenance. Recording (DVD) shall be given to Owner.

B. Provide service and maintenance of elevator system and components for two (2) years from Date of Substantial Completion. Provide service during normal working hours.

NOT FOR BIDDING

C. Continuing Maintenance Proposal: Provide a continuing maintenance proposal from Installer to Owner, in the form of a standard one-year; two-year & five-year maintenance agreement, starting on date initial maintenance service is concluded. State services, obligations, conditions, and terms for agreement period and for future renewal options.

D. Perform maintenance work using competent and qualified personnel under the supervision and in the direct employ of the elevator manufacturer or original installer.

**PART 2 PRODUCTS**

2.01 MANUFACTURERS

A. Product: Holeless hydraulic passenger elevator, 3500 lb capacity, of minimum dimensions to meet gurney transportation requirements.
   1. Acceptable Manufacturers:
      a. ThyssenKrupp Elevator
      b. Otis Elevator Co
      c. Schindler Elevator Corp. (Basis of Design)
      d. Delaware Elevator
      e. Canton Elevator
      f. Substitutions: See Division 1 Section - Product Requirements.
   2. All operating components to be manufactured by same entity, unless otherwise indicated.
      a. Where required to meet non-proprietary maintenance requirements, alternative manufacturers will be considered provided the basis-of-design manufacturer requirements are met.

2.02 ELEVATORS

A. Elevator Number(s): Elev. Nos. 1, 2 and 3
B. Type: Holeless, beside-the-car-jamb, acting, dual cylinder.
C. Rated Load 3500 lb
D. Rated Speed: 125 fpm.
E. Configuration, Openings and Travel: Refer to Drawings.
F. Operation System: Single automatic
G. Additional controls: Restricted use.
   1. Provide provisions for card reader access control at each elevator landing.
   2. See Division 28 for Access Control requirements.
   3. Coordinate key card operations with Owner.
H. Power Supply: 480 volt, 3 phase, 60 Hz.
   1. Motor Rating: 30 horsepower.
I. Auxiliary Operations:
   1. Battery-powered lowering.

2.03 CAR ENCLOSURE

A. General: Provide steel-framed car enclosures with non-removable wall panels, with car roof, access doors, power door operators, and ventilation.
   1. Provide standard railings complying with ASME A17.1 on car tops where required by ASME A17.1.
B. Canopy: 14 gauge steel, powder coated.
   1. Emergency exit: Provide as required by code.

NOT FOR BIDDING

C. Ceiling:
   1. Downlight ceiling, #4 Stainless Steel, LED lighting.
D. Front Return Wall(s): 16 gauge #4 Stainless Steel.
E. Transom: 16 gauge #4 Stainless Steel.
F. Subfloor: Underlayment grade, exterior plywood, 5/8-inch (16-mm) nominal thickness.
G. Floor Finish:
   1. Floor prepared to receive resilient tile (specified in Division 9 Section "Resilient Floor Tile").
H. Car Fixtures: Satin stainless steel, No. 4 finish
I. Car Door(s): #5WL Textured stainless steel clad.
J. Car Sill(s): Extruded aluminum, with grooved surface.
K. Ventilation: Two-speed exhaust fan in car canopy controlled by key switch in car operating panel.
L. Side Walls and Rear Wall:
   1. Plastic laminate on cold-rolled galvanized steel wall panels with stainless steel vertical panel binders.
   2. Reveals: Black powder coat.
   3. Color/Pattern as selected by Architect.
M. Base:
   1. Stainless steel, recessed.
N. Handrail(s): #4 Stainless Steel ½” x 1 ½”
O. Infrared curtain unit (ICU) door protection.
P. Additional Requirements:
   1. Provide inspection certificate in each car, mounted under acrylic cover with frame made from satin stainless steel, No. 4 finish
   2. Provide blanket hooks and two complete sets of full-height protective blankets.

2.04 HOISTWAY ENTRANCES

A. General: Provide manufacturer's standard horizontal-sliding, door-and-frame hoistway entrances complete with track systems, hardware, sills, and accessories. Provide frame size and profile to coordinate with hoistway wall construction.
B. Materials and Fabrication: Provide manufacturer's standards, but not less than the following:
   1. Stainless-Steel Frames: Formed from stainless-steel sheet, satin finish.
   2. Stainless-Steel Doors: Flush, hollow-metal construction; fabricated from stainless-steel sheet, 5WL textured finish..
   3. Sight Guards: Provide sight guards on doors matching door edges.
   4. Sills: Extruded aluminum, with grooved surface.
   5. Non-shrink, Nonmetallic Grout: Factory-packaged, nonstaining, noncorrosive, nongaseous grout complying with ASTM C 1107.

2.05 SIGNAL EQUIPMENT

A. General: Provide hall-call and car-call buttons that light when activated and remain lit until call has been fulfilled. Fabricate lighted elements with LEDs.
B. Car Control Stations: Provide manufacturer's standard recessed car control stations. Mount in return panel adjacent to car door, unless otherwise indicated.

NOT FOR BIDDING

1. Mark buttons and switches with standard identification for required use or function that complies with ASME A17.1. Use both tactile symbols and Braille.
2. Provide "No Smoking" sign matching car control station, either integral with car control station or mounted adjacent to it, with text and graphics as required by authorities having jurisdiction.

C. Emergency Communication System: Provide system that complies with ASME A17.1 and the U.S. Architectural & Transportation Barriers Compliance Board's "Americans with Disabilities Act (ADA), Accessibility Guidelines for Buildings and Facilities (ADAAG)." On activation, system dials preprogrammed number of monitoring station and identifies elevator location to monitoring station. System provides two-way voice communication without using a handset and provides visible signals that indicate when system has been activated and when monitoring station has responded. System is contained in flush-mounted cabinet, with identification, instructions for use, and battery backup power supply.

D. Car Position Indicator: Provide digital-type car position indicator, located above car door or above car control station. Also provide audible signal to indicate to passengers that ear is stopping at floor served.
   1. Include travel direction arrows if not provided in car control station.

E. Hall Push-Button Stations: Provide one hall push-button station at each landing.
   1. Provide manufacturer's standard vandal-resistant recessed units with exposed face plates.
   2. Provide provisions for card reader at each push button station. Card readers shall be provided by Division 28 contractor.

2.06 EMERGENCY POWER

A. Arrange elevator operation to operate under emergency power when normal power supply fails.

B. Emergency Power Supply: Self-contained battery power.

C. Upon transfer to emergency power, advance elevator to a pre-selected landing, stop car, open doors, disable operating circuits, and hold in standby condition.

2.07 MACHINE ROOM FITTINGS

A. Wall-Mounted Frames: Glazed with clear plastic; sized as required. Provide one for master electric and hydraulic schematic and one for lubrication chart. Install charts.

B. Key Cabinet: Wall-mounted, lockable, keyed to building keying system, for control/operating panel keys.
   1. Provide two extra control/operating panel keys.

**PART 3 EXECUTION**

3.01 EXAMINATION

A. Verify existing conditions before starting work.

B. Verify that hoistway, pit, and machine room are ready for work of this section.

C. Verify hoistway shaft and openings are of correct size and within tolerance.

D. Verify location and size of machine foundation and position of machine foundation bolts.

E. Verify that electrical power is available and of the correct characteristics.

3.02 PREPARATION

A. Arrange for temporary electrical power for installation work and testing of elevator components.

NOT FOR BIDDING

3.03 INSTALLATION

A. Install system components. Connect equipment to building utilities.

B. Provide conduit, boxes, wiring, and accessories.

C. Mount machines on vibration and acoustic isolators, on bed plate and concrete pad. Place on structural supports and bearing plates. Securely fasten to building supports. Prevent lateral displacement.

D. Accommodate equipment in space indicated.

E. Install guide rails using threaded bolts with metal shims and lock washers under nuts. Compensate for expansion and contraction movement of guide rails.

F. Accurately machine and align guide rails. Form smooth joints with machined splice plates.
   1. Coordinate installation in hoistway wall construction.

G. Install hoistway door sills, frames, and headers in hoistway walls. Grout sills in place. Set entrances in vertical alignment with car openings and aligned with plumb hoistway lines.

H. Structural Metal Surfaces: Clean surfaces of rust, oil or grease, wipe down with solvent; prime two coats.

I. Machine Room Components: Clean and degrease; prime one coat; finish with one coat of enamel.

J. Adjust equipment for smooth and quiet operation.

3.04 ERECTION TOLERANCES

A. Guide Rail Alignment: Plumb and parallel to each other in accordance with ASME A17.1.

B. Cab Movement on Aligned Guide Rails: Smooth movement, with no objectionable lateral or oscillating movement or vibration.

3.05 FIELD QUALITY CONTROL

A. Acceptance testing:
   1. Acceptance Testing: On completion of elevator installation and before permitting use (either temporary or permanent) of elevators, perform acceptance tests as required and recommended by ASME A17.1 and by governing regulations and agencies.
   2. Advise Owner, Architect, and authorities having jurisdiction in advance of dates and times tests are to be performed on elevators.

B. Demonstration
   1. Engage a factory-authorized service representative to train Owner's maintenance personnel to operate elevator. Refer to Division 1 Section "Demonstration and Training." Professionally record training session & provide owner with digital video tape or DVD.
   2. Check operation of elevator with Owner's personnel present and before date of Substantial Completion. Determine that operation systems and devices are functioning properly.
   3. Check operation of elevator with Owner's representative present not more than one month before end of warranty period. Determine that operation systems and devices are functioning properly.

C. Testing and inspection by regulatory agencies will be performed at their discretion.
   1. Schedule tests with agencies and notify Owner and Architect.
   2. Obtain permits required to perfonn tests.
   3. Document regulatory agency tests and inspections in accordance with the requirements of Division 1 Section - Quality Requirements.

NOT FOR BIDDING

4. Perform tests required by regulatory agencies.
5. Furnish test and approval certificates issued by authorities having jurisdiction.

3.06 ADJUSTING

A. Adjust for smooth acceleration and deceleration of car so not to cause passenger discomfort.

B. Adjust automatic floor leveling feature at each floor to achieve 1/4 inch from flush.

3.07 CLEANING AND PROTECTION

A. Remove protective coverings from finished surfaces.

B. Clean surfaces and components ready for inspection.

C. Do not permit construction traffic within cab after cleaning.

**END OF SECTION**

NOT FOR BIDDING

# SECTION 144216
# VERTICAL WHEELCHAIR LIFTS

## PART 1 GENERAL

1.01 SECTION INCLUDES

A. Vertical Wheelchair Lifts: shaftway.

1.02 RELATED REQUIREMENTS

A. Section 03 3000 - Cast-in-Place Concrete

B. Section 06 1000 - Rough Carpentry

C. Section 09 2116 - Gypsum Board Assemblies

D. Division - Electrical: Dedicated telephone service and wiring connections; Lighting and wiring connections at top of shaft; Electrical power service and wiring connections.

1.03 REFERENCE STANDARDS

A. ASME A17.1 - Safety Code for Elevators and Escalators.

B. ASME A17.5 - Elevator and Escalator Electrical Equipment.

C. ASME A18.1 - Safety Standard for Platform Lifts and Stairway Chairlifts.

D. ICC/ANSI A117.1 - Accessible and Usable Buildings and Facilities.

E. NFPA 70 - National Electric Code.

1.04 SUBMITTALS

A. See Section 01 3000 - Administrative Requirements, for submittal procedures.

B. Product Data: Manufacturer's data sheet on each product to be used, including:
   1. Submit manufacturer's installation instructions, including preparation, storage and handling requirements.
   2. Include complete description of performance and operating characteristics.
   3. Show maximum and average power demands.

C. Shop Drawings:
   1. Show typical details of assembly, erection and anchorage.
   2. Include wiring diagrams for power, control, and signal systems.
   3. Show complete layout and location of equipment, including required clearances and coordination with shaftway.

D. Selection Samples: For each finished product specified, provide two complete sets of color chips representing manufacturer's full range of available colors and patterns.

1.05 QUALITY ASSURANCE

A. Manufacturer Qualifications: Firm with minimum 10 years experience in manufacturing of vertical platform lifts, with evidence of experience with similar installations of type specified.

B. Installer Qualifications: Licensed to install equipment of this scope, with evidence of experience with specified equipment. Installer shall maintain an adequate stock of replacement parts, have qualified people available to ensure fulfillment of maintenance and callback service without unreasonable loss of time in reaching project site.

1.06 REGULATORY REQUIREMENTS

A. Provide platform lifts in compliance with:
   1. ASME A18.1 - Safety Standard for Platform Lifts and Stairway Chairlifts.
   2. ASME A17.1 - Safety Code for Elevators and Escalators.

NOT FOR BIDDING

3. ASME A17.5 - Elevator and Escalator Electrical Equipment.
4. NFPA 70 - National Electric Code.

1.07 DELIVERY, STORAGE, AND HANDLING

A. Store products in manufacturer's unopened packaging until ready for installation.

B. Store components off the ground in a dry covered area, protected from adverse weather conditions.

1.08 PROJECT CONDITIONS

A. Do not use wheelchair lift for hoisting materials or personnel during construction period.

1.09 WARRANTY

A. Warranty: Provide a two year limited warranty for wheelchair lift materials and workmanship

**PART 2 PRODUCTS**

2.01 MANUFACTURERS

A. Vertical Wheelchair Lifts:
1. Basis of Design: Garaventa: www.garaventalift.com

B. Products complying with specifucation requirements by the following other manufacturers are also approved:
1. Savaria: www.wantalift.com.
2. Harmar: www.harmar.com.
3. Substitutions: See Section 01 6000 - Product Requirements.

2.02 ENCLOSED VERTICAL WHEELCHAIR LIFT

A. Capacity: 750 lbs (340 kg) rated capacity.

B. Mast Height:
1. Basis of Design Model GVL-SW-144: 135 inches maximum lifting height.

C. Nominal Clear Platform Dimensions:
1. Standard: 39 inches (992 mm) by 54 inches (1370 mm).

D. Platform Configuration:
1. Straight Through Entry/Exit: Front and rear openings.

E. Landing Openings:
1. Lower Landing: Door.
2. Upper Landing: Door.

F. Doors: Self-closing type.
1. Door Height: Flush mount, 80 inches.
2. Width: 42 inches
3. Door Construction: aluminum frame with panels of ¼-inch laminated safety glass and D-Handle Pull, 12 inches offset.

G. Door Construction:
1. Non-Rated Doors: Pre-hung, on an anodized aluminum frame, with a door closer, pull handle, integrated interlock and constructed with a 16 gauge (1.5 mm) galvanized steel kick plate and upper panel as follows:
   a. Panels of 1/4 inch (6 mm) laminated safety glass.
   b. D-Handle Pull: 12 inch (305 mm) offset D-Handle.

H. Power Door Operator: Automatically opens the door/gate when platform arrives at a landing. Will also open at landing by pressing call button or by gently pulling door.

NOT FOR BIDDING

1. ADA Compliant and obstruction sensitive.
2. Low voltage, 24 VDC with all wiring concealed.
3. Provide power operators at all doors.

I. Lift Components:
1. Machine Tower: Custom aluminum extrusion.
2. Base Frame: Structural steel tubing.
3. Platform Side Wall Panels: 16 gauge (1.5 mm) galvanized steel sheet.

J. Base Mounting and Access to Lift at Lower Landing:
1. Pit Mount: Lift to be mounted in pit with dimensions to meet manufacturers requirements for the platform size specified. Pit construction shall be in accordance with Section 03 3000 - Cast-in-Place Concrete.

K. Hydraulic Drive:
1. Drive Type: Chain hydraulic.
2. Emergency Operation: Manual device to lower platform and auxiliary battery power to raise or lower platform.
3. Safety Devices:
   a. Slack chain safety device.
   b. Shoring device.
4. Travel Speed: 17 fpm (5.2 m/minute).
5. Motor: 3.0 hp (2.2 kW); 24 volts DC.
6. Power Supply:
   a. 120 VAC single phase; 60 Hz on a dedicated 15 amp circuit.
   b. Powered by continuous building mains converted to 24 VDC equipped with auxiliary battery power system capable of running lift up and down for a minimum of 5 trips with rated load. Required for high usage lifts.

L. Platform Controls: 24 VDC control circuit with the following features.
1. Direction Control: Illuminated tactile and constant pressure buttons with dual platform courtesy lights and safety light.
2. Illuminated and audible emergency stop switch shuts off power to lift and activates audio alarm equipped with battery backup.
3. Keyed operation.
4. Emergency Telephone: Platform shall be equipped with ADA compliant autodialer telephone with a stainless steel faceplate. Telephone shall operate in the event of power failure. A telephone line shall be supplied to the lift site as specified under Division 26.
5. Arrival Gong and Digital Floor Display.

M. Call Station Controls: 24 VDC control circuit with the following features.
1. Direction Control: Illuminated and tactile constant pressure buttons with illuminated "in-use" indicator.
2. Safety indicator lamp.
3. Keyed operation.
4. Call Station Mounting:
   a. Lower:
      1) Wall mounted surface.
   b. Upper:
      1) Wall mounted surface.

N. Safety Devices and Features:

NOT FOR BIDDING

1. Grounded electrical system with upper, lower, and final limit switches.
2. At all landings a solenoid activated interlock shall electrically monitor that the door is in the closed position and the lock is engaged before lift can move from landing.
3. Pit stop switch mounted on mast wall.
4. Electrical disconnect shall shut off power to the lift.

O. Finishes
1. Aluminum Extrusions: as selected by Architect.
2. Ferrous Components: Electrostatically applied baked powder finish, fine textured.
a. Color: as selected by Architect

**PART 3 EXECUTION**

3.01 EXAMINATION

A. Do not begin installation until substrates have been properly prepared.

B. Verify shaft and machine space are of correct size and within tolerances.

C. Verify required landings and openings are of correct size and within tolerances.

D. Verify electrical rough-in is at correct location.

E. If substrate preparation is the responsibility of another installer, notify Architect of unsatisfactory preparation before proceeding.

3.02 PREPARATION

A. Clean surfaces thoroughly prior to installation.

B. Prepare surfaces using the methods recommended by the manufacturer for achieving the best result for the substrate under the project conditions.

3.03 INSTALLATION

A. Install lifts in accordance with applicable regulatory requirements including ASME A17.1, ASME A 18.1 and the manufacturer's instructions.

B. Install system components and connect to building utilities.

C. Accommodate equipment in space indicated.

D. Startup equipment in accordance with manufacturer's instructions.

E. Adjust for smooth operation.

3.04 FIELD QUALITY CONTROL

A. Perform tests in compliance with ASME A 17.1 or A18.1 and as required by authorities having jurisdiction.

B. Schedule tests with agencies and Architect, Owner, and Contractor present.

3.05 PROTECTION

A. Protect installed products until completion of project.

B. Touch-up, repair or replace damaged products before Substantial Completion.

**END OF SECTION**

NOT FOR BIDDING