Additions & Renovations to

SILVER LAKE ELEMENTARY SCHOOL

NOT FOR BIDDING PURPOSES

Owner:

Appoquinimink School District

118 South Sixth Street
Odessa, DE 19730

Architect:

R G Architects, LLC

200 W Main Street
Middletown, DE 19709
302.376.8100

Mechanical & Electrical Engineers:

Furlow Associates

1206 Society Drive
Claymont, DE 19703
302.798.3515

Structural Engineer:

MacIntosh Engineering

2 Mill Road
Wilmington, DE 19806
302.252.9200

Foodservice Consultants

Nyikos Associates, Inc.

18219-A Flower Hill Way
Gaithersburg, MD 20879
240.683.9530

Site Engineer:

Dufflield Associates

5400 Limestone Road
Wilmington, DE 19808
302.239.6634

Construction Manager:

EDiS Company

110 S. Poplar Street, Suite 400
Wilmington, DE 19801
800.995.3347

Project Manual
VOLUME 2

Issued for Bidding

21 February 2020

RG GR ARCHITECTS

TABLE OF CONTENTS

VOLUME 2

NOT FOR BIDDING PURPOSES

DIVISION 02 – EXISTING CONDITIONS

02 41 19 SELECTIVE STRUCTURE DEMOLITION

DIVISION 03 - CONCRETE

03 30 00 CAST-IN-PLACE CONCRETE
03 36 00 CONCRETE FLOOR SEALER

DIVISION 04 –MASONRY

04 20 00 UNIT MASONRY
04 72 00 CAST STONE MASONRY

DIVISION 05 - METALS

05 12 00 STRUCTURAL STEEL FRAMING
05 31 00 STEEL DECKING
05 40 00 COLD-FORMED METAL FRAMING
05 52 13 PIPE AND TUBE RAILINGS

DIVISION 06 – WOOD, PLASTICS AND COMPOSITES

06 10 00 ROUGH CARPENTRY
06 16 00 SHEATHING
06 20 23 INTERIOR FINISH CARPENTRY
06 40 23 INTERIOR ARCHITECTURAL WOODWORK

DIVISION 07 – THERMAL AND MOISTURE PROTECTION

07 19 00 WATER REPELLENTS
07 21 00 THERMAL INSULATION
07 21 19 FOAMED-IN-PLACE INSULATION
07 22 00 VENTILATED ROOF INSULATION PANELS
07 31 13 ASPHALT SHINGLES
07 46 46 FIBER-CEMENT SIDING
07 53 00 EPDM THERMOSET SINGLE-PLY ROOFING
07 62 00 SHEET METAL FLASHING AND TRIM
07 71 00 ROOF SPECIALTIES
07 72 00 ROOF ACCESSORIES
07 84 13 PENETRATION FIRESTOPPING
07 91 00 PREFORMED JOINT SEALS
07 92 00 JOINT SEALANTS
07 95 13.13 EXTERIOR EXPANSION JOINT COVER ASSEMBLIES

DIVISION 08 – OPENINGS

08 11 13 HOLLOW METAL DOORS AND FRAMES
08 14 16 FLUSH WOOD DOORS
08 16 13 FRP FLUSH DOORS
08 31 13 ACCESS DOORS AND FRAMES

08 33 23 OVERHEAD COILING DOORS
08 41 13 ALUMINUM-FRAMED ENTRANCES AND STOREFRONTS
08 51 13 ALUMINUM WINDOWS
08 71 00 DOOR HARDWARE
08 80 00 GLAZING

DIVISION 09 – FINISHES

09 30 00 TILING
09 51 13 ACOUSTICAL PANEL CEILINGS
09 64 29 WOOD STRIP FLOORING
09 65 00 RESILIENT FLOORING
09 65 13 RESILIENT BASE AND ACCESSORIES
09 65 16 RESILIENT SHEET FLOORING
09 65 19 RESILIENT TILE FLOORING
09 67 23 RESINOUS FLOORING
09 68 13 CARPET TILE
09 77 20 FIBERGLASS REINFORCED WALL PANEL
09 77 23 FABRIC-WRAPPED PANELS
09 91 00 PAINTING

DIVISION 10 - SPECIALTIES

10 11 00 VISUAL DISPLAY UNITS
10 14 16 PLAQUES
10 14 23 PANEL SIGNAGE
10 21 23 CUBICLE CURTAINS AND TRACK
10 22 39 FOLDING PANEL PARTITIONS
10 26 00 WALL AND CORNER PROTECTION
10 28 00 TOILET, BATH AND LAUNDRY ACCESSORIES
10 44 13 FIRE PROTECTION CABINETS
10 44 16 FIRE EXTINGUISHERS
10 51 13 METAL LOCKERS
10 75 16 GROUND-SET FLAG POLES

DIVISION 11 – EQUIPMENT

11 00 00 MISCELLANEOUS EQUIPMENT
11 40 00 FOODSERVICE EQUIPMENT
11 52 13 PROJECTION SCREENS
11 61 43 STAGE CURTAINS
11 66 23 GYMNASIUM EQUIPMENT
11 68 00 PLAY FIELD EQUIPMENT AND STRUCTURES

DIVISION 12 – FURNISHINGS

12 24 13 ROLLER SHADES
12 32 00 MODULAR CASEWORK

DIVISION 14 – CONVEYING EQUIPMENT

14 42 00 WHEELCHAIR LIFTS

NOT FOR BIDDING PURPOSES

TABLE OF CONTENTS
VOLUME 3

DIVISION 21 – SPECIAL CONSTRUCTION

21 01 70 FIRE SUPPRESSION SPRINKLER AND STANDPIPE SYSTEMS

DIVISION 22 – PLUMBING

22 00 00 GENERAL PROVISIONS - PLUMBING/FIRE PROTECTION
22 00 10 BASIC MATERIALS AND METHODS - PLUMBING
22 00 30 INSULATION & COVERING – PLUMBING
22 01 10 DRAINAGE SYSTEMS – PLUMBING
22 01 20 DOMESTIC WATER SYSTEMS – PLUMBING
22 01 30 GAS PIPING SYSTEMS – PLUMBING
22 01 40 FIXTURES – PLUMBING
22 01 50 EQUIPMENT – PLUMBING
22 01 90 TESTING – PLUMBING
22 01 91 BALANCING – PLUMBING

DIVISION 23 – HVAC

23 02 00 GENERAL PROVISIONS – HVAC
23 02 10 BASIC MATERIALS AND METHODS – HVAC
23 02 15 VALVES
23 02 30 INSULATION & COVERING – HVAC
23 03 00 VIBRATION AND SOUND ISOLATION – HVAC
23 04 00 HEATING GENERATION EQUIPMENT
23 04 10 HEATING GENERATION AUXILIARY EQUIPMENT
23 04 50 REFRIGERATION EQUIPMENT – HVAC
23 05 00 PIPING SYSTEMS & ACCESSORIES – HVAC
23 05 10 WATER TREATMENT (HVAC)
23 06 00 AIR DISTRIBUTION & ACCESSORIES – HVAC
23 06 05 FANS
23 07 25 TERMINAL HEATING UNITS
23 07 60 AIR HANDLING EQUIPMENT
23 08 61 AIR PURIFICATION SYSTEM
23 09 00 AUTOMATIC TEMPERATURE CONTROL
23 09 50 TESTING & BALANCING OF MECHANICAL SYSTEMS

DIVISION 26 – ELECTRICAL

26 00 00 GENERAL PROVISIONS – ELECTRICAL
26 00 55 ELECTRICAL IDENTIFICATION
26 01 10 RACEWAYS
26 01 20 WIRES AND CABLES
26 01 30 MANHOLES
26 01 35 ELECTRICAL BOXES & FITTINGS
26 01 40 WIRING DEVICES
26 01 55 MOTOR STARTERS
26 01 60 PANELBOARDS
26 01 65 SWITCHBOARDS
26 01 70 MOTOR AND CIRCUIT DISCONNECTS
26 01 80 OVERCURRENT PROTECTIVE DEVICES
26 01 90 SUPPORTING DEVICES
26 01 95 POWER SYSTEM STUDIES
26 04 52 GROUNDING
26 04 60 TRANSFORMERS

NOT FOR BIDDING PURPOSES

26 04 70 DISTRIBUTION CIRCUITS
26 04 71 FEEDER CIRCUITS
26 04 72 BRANCH CIRCUITS
26 05 10 BUILDING LIGHTING
26 05 20 ROADWAY & PARKING AREA LIGHTING
26 06 01 LIGHTNING PROTECTION SYSTEMS
26 07 31 WIRELESS CLOCK SYSTEM
26 07 40 NETWORK CABLING SYSTEMS
26 07 71 INTERCOM/TELECOMMUNICATION AND CLOCK SYSTEM
26 07 72 CAFETORIUM SOUND REINFORCEMENT SYSTEM
26 08 51 HEATING TERMINALS
26 09 30 DIMMING CONTROLS

SECTION 28 – ELECTRICAL SAFETY AND SECURITY

28 07 21 FIRE ALARM AND DETECTION SYSTEMS
28 07 25 INTRUSION SYSTEM
28 07 27 INTEGRATED ACCESS CONTROL & SECURITY MANAGEMENT SYSTEM
28 07 28 CCTV – NETWORK DIGITAL VIDEO MANAGEMENT SYSTEM

END OF SECTION

NOT FOR BIDDING PURPOSES

SECTION 024119

SELECTIVE STRUCTURE DEMOLITION

NOT FOR BIDDING PURPOSES

PART 1 - GENERAL

1.1 RELATED DOCUMENTS

A. Drawings and general provisions of the Contract, including General and Supplementary Conditions and Division 01 Specification Sections, apply to this Section.

1.2 SUMMARY

A. Section Includes:

1. Demolition and removal of selected portions of building or structure.
2. Demolition and removal of selected site elements.
3. Salvage of existing items to be reused or recycled.

B. Related Requirements:

1. Division 01 Section "Summary" for restrictions on the use of the premises, Owner-occupancy requirements, and phasing requirements.
2. Division 01 Section "Historic Treatment Procedures" for historic removal and dismantling.
3. Division 01 Section "Temporary Tree and Plant Protection" for temporary protection of existing trees and plants that are affected by selective demolition.
4. Division 01 Section "Execution" for cutting and patching procedures.
5. Division 31 Section "Site Clearing" for site clearing and removal of above- and below-grade improvements.

1.3 DEFINITIONS

A. Remove: Detach items from existing construction and legally dispose of them off-site unless indicated to be removed and salvaged or removed and reinstalled.

B. Remove and Salvage: Carefully detach from existing construction, in a manner to prevent damage, and deliver to Owner.

C. Remove and Reinstall: Detach items from existing construction, prepare for reuse, and reinstall where indicated.

D. Existing to Remain: Existing items of construction that are not to be permanently removed and that are not otherwise indicated to be removed, removed and salvaged, or removed and reinstalled.

1.4 MATERIALS OWNERSHIP

A. Unless otherwise indicated, demolition waste becomes property of Contractor.

B. Historic items, relics, antiques, and similar objects including, but not limited to, cornerstones and their contents, commemorative plaques and tablets, and other items of interest or value to Owner that may be uncovered during demolition remain the property of Owner.

1. Carefully salvage in a manner to prevent damage and promptly return to Owner.

1.5 PREINSTALLATION MEETINGS

A. Predemolition Conference: Conduct conference at **Project site**.

1. Inspect and discuss condition of construction to be selectively demolished.
2. Review structural load limitations of existing structure.
3. Review and finalize selective demolition schedule and verify availability of materials, demolition personnel, equipment, and facilities needed to make progress and avoid delays.
4. Review requirements of work performed by other trades that rely on substrates exposed by selective demolition operations.
5. Review areas where existing construction is to remain and requires protection.

1.6 INFORMATIONAL SUBMITTALS

A. Qualification Data: For refrigerant recovery technician.

B. Schedule of Selective Demolition Activities: Indicate the following:

1. Detailed sequence of selective demolition and removal work, with starting and ending dates for each activity. Ensure Owner's on-site operations are uninterrupted.
2. Interruption of utility services. Indicate how long utility services will be interrupted.
3. Coordination for shutoff, capping, and continuation of utility services.
4. Use of elevator and stairs.
5. Coordination of Owner's continuing occupancy of portions of existing building and of Owner's partial occupancy of completed Work.

C. Inventory: Submit a list of items to be removed and salvaged and deliver to Owner prior to start of demolition.

D. Predemolition Photographs or Video: Submit before Work begins.

E. Statement of Refrigerant Recovery: Signed by refrigerant recovery technician responsible for recovering refrigerant, stating that all refrigerant that was present was recovered and that recovery was performed according to EPA regulations. Include name and address of technician and date refrigerant was recovered.

F. Warranties: Documentation indicated that existing warranties are still in effect after completion of selective demolition.

NOT FOR BIDDING PURPOSES

1.7 CLOSEOUT SUBMITTALS

A. Inventory: Submit a list of items that have been removed and salvaged.

1.8 QUALITY ASSURANCE

A. Refrigerant Recovery Technician Qualifications: Certified by an EPA-approved certification program.

1.9 FIELD CONDITIONS

A. Conditions existing at time of inspection for bidding purpose will be maintained by Owner as far as practical.

1. Before selective demolition, Owner will remove the following items:

a. All furniture, fixtures and equipment.

B. Notify Architect of discrepancies between existing conditions and Drawings before proceeding with selective demolition.

C. Hazardous Materials: It is not expected that hazardous materials will be encountered in the Work.

1. If suspected hazardous materials are encountered, do not disturb; immediately notify Architect and Owner. Hazardous materials will be removed by Owner under a separate contract.

D. Storage or sale of removed items or materials on-site is not permitted.

E. Utility Service: Maintain existing utilities indicated to remain in service and protect them against damage during selective demolition operations.

1. Maintain fire-protection facilities in service during selective demolition operations.

1.10 WARRANTY

A. Existing Warranties: Remove, replace, patch, and repair materials and surfaces cut or damaged during selective demolition, by methods and with materials so as not to void existing warranties. Notify warrantor before proceeding. Existing warranties include the following:

1. Existing asphalt & EPDM roofing.

B. Notify warrantor on completion of selective demolition, and obtain documentation verifying that existing system has been inspected and warranty remains in effect. Submit documentation at Project closeout.

NOT FOR BIDDING PURPOSES

NOT FOR BIDDING PURPOSES

PART 2 - PRODUCTS

2.1 PEFORMANCE REQUIREMENTS

A. Regulatory Requirements: Comply with governing EPA notification regulations before beginning selective demolition. Comply with hauling and disposal regulations of authorities having jurisdiction.

B. Standards: Comply with ANSI/ASSE A10.6 and NFPA 241.

PART 3 - EXECUTION

3.1 EXAMINATION

A. Verify that utilities have been disconnected and capped before starting selective demolition operations.

B. Review record documents of existing construction provided by Owner. Owner does not guarantee that existing conditions are same as those indicated in record documents.

C. Survey existing conditions and correlate with requirements indicated to determine extent of selective demolition required.

D. When unanticipated mechanical, electrical, or structural elements that conflict with intended function or design are encountered, investigate and measure the nature and extent of conflict. Promptly submit a written report to Architect.

E. Perform an engineering survey of condition of building to determine whether removing any element might result in structural deficiency or unplanned collapse of any portion of structure or adjacent structures during selective building demolition operations.

1. Perform surveys as the Work progresses to detect hazards resulting from selective demolition activities.

F. Survey of Existing Conditions: Record existing conditions by use of **measured drawings, preconstruction photographs** or **videotapes**.

1. Comply with requirements specified in Division 01 Section "Photographic Documentation."
2. Inventory and record the condition of items to be removed and salvaged. Provide **photographs or video** of conditions that might be misconstrued as damage caused by salvage operations.

3.2 UTILITY SERVICES AND MECHANICAL/ELECTRICAL SYSTEMS

A. Existing Services/Systems to Remain: Maintain services/systems indicated to remain and protect them against damage.

1. Comply with requirements for existing services/systems interruptions specified in Division 01 Section "Summary."

B. Existing Services/Systems to Be Removed, Relocated, or Abandoned: Locate, identify, disconnect, and seal or cap off indicated utility services and mechanical/electrical systems serving areas to be selectively demolished.

1. **Owner** will arrange to shut off indicated services/systems when requested by Contractor.
2. Arrange to shut off indicated utilities with utility companies.
3. If services/systems are required to be removed, relocated, or abandoned, provide temporary services/systems that bypass area of selective demolition and that maintain continuity of services/systems to other parts of building.
4. Disconnect, demolish, and remove fire-suppression systems, plumbing, and HVAC systems, equipment, and components indicated to be removed.

   a. Piping to Be Removed: Remove portion of piping indicated to be removed and cap or plug remaining piping with same or compatible piping material.
   b. Piping to Be Abandoned in Place: Drain piping and cap or plug piping with same or compatible piping material.
   c. Equipment to Be Removed: Disconnect and cap services and remove equipment.
   d. Equipment to Be Removed and Reinstalled: Disconnect and cap services and remove, clean, and store equipment; when appropriate, reinstall, reconnect, and make equipment operational.
   e. Equipment to Be Removed and Salvaged: Disconnect and cap services and remove equipment and deliver to Owner.
   f. Ducts to Be Removed: Remove portion of ducts indicated to be removed and plug remaining ducts with same or compatible ductwork material.
   g. Ducts to Be Abandoned in Place: Cap or plug ducts with same or compatible ductwork material.

C. Refrigerant: Remove refrigerant from mechanical equipment to be selectively demolished according to 40 CFR 82 and regulations of authorities having jurisdiction.

3.3 PREPARATION

A. Site Access and Temporary Controls: Conduct selective demolition and debris-removal operations to ensure minimum interference with roads, streets, walks, walkways, and other adjacent occupied and used facilities.

1. Comply with requirements for access and protection specified in Division 01 Section "Temporary Facilities and Controls."

B. Temporary Facilities: Provide temporary barricades and other protection required to prevent injury to people and damage to adjacent buildings and facilities to remain.

1. Provide protection to ensure safe passage of people around selective demolition area and to and from occupied portions of building.
2. Provide temporary weather protection, during interval between selective demolition of existing construction on exterior surfaces and new construction, to prevent water leakage and damage to structure and interior areas.

NOT FOR BIDDING PURPOSES

3. Protect walls, ceilings, floors, and other existing finish work that are to remain or that are exposed during selective demolition operations.
4. Cover and protect furniture, furnishings, and equipment that have not been removed.
5. Comply with requirements for temporary enclosures, dust control, heating, and cooling specified in Division 01 Section "Temporary Facilities and Controls."

C. Temporary Shoring: Provide and maintain shoring, bracing, and structural supports as required to preserve stability and prevent movement, settlement, or collapse of construction and finishes to remain, and to prevent unexpected or uncontrolled movement or collapse of construction being demolished.

1. Strengthen or add new supports when required during progress of selective demolition.

3.4 SELECTIVE DEMOLITION, GENERAL

A. General: Demolish and remove existing construction only to the extent required by new construction and as indicated. Use methods required to complete the Work within limitations of governing regulations and as follows:

1. Proceed with selective demolition systematically, from higher to lower level. Complete selective demolition operations above each floor or tier before disturbing supporting members on the next lower level.
2. Neatly cut openings and holes plumb, square, and true to dimensions required. Use cutting methods least likely to damage construction to remain or adjoining construction. Use hand tools or small power tools designed for sawing or grinding, not hammering and chopping, to minimize disturbance of adjacent surfaces. Temporarily cover openings to remain.
3. Cut or drill from the exposed or finished side into concealed surfaces to avoid marring existing finished surfaces.
4. Do not use cutting torches until work area is cleared of flammable materials. At concealed spaces, such as duct and pipe interiors, verify condition and contents of hidden space before starting flame-cutting operations. Maintain **fire watch and** portable fire-suppression devices during flame-cutting operations.
5. Maintain adequate ventilation when using cutting torches.
6. Remove decayed, vermin-infested, or otherwise dangerous or unsuitable materials and promptly dispose of off-site.
7. Remove structural framing members and lower to ground by method suitable to avoid free fall and to prevent ground impact or dust generation.
8. Locate selective demolition equipment and remove debris and materials so as not to impose excessive loads on supporting walls, floors, or framing.
9. Dispose of demolished items and materials promptly. **Comply with requirements in Division 01 Section "Construction Waste Management and Disposal."**

B. Removed and Salvaged Items:

1. Clean salvaged items.
2. Pack or crate items after cleaning. Identify contents of containers.
3. Store items in a secure area until delivery to Owner.
4. Transport items to Owner's storage area **designated by Owner**.
5. Protect items from damage during transport and storage.

NOT FOR BIDDING PURPOSES

C. Removed and Reinstalled Items:

1. Clean and repair items to functional condition adequate for intended reuse.
2. Pack or crate items after cleaning and repairing. Identify contents of containers.
3. Protect items from damage during transport and storage.
4. Reinstall items in locations indicated. Comply with installation requirements for new materials and equipment. Provide connections, supports, and miscellaneous materials necessary to make item functional for use indicated.

D. Existing Items to Remain: Protect construction indicated to remain against damage and soiling during selective demolition. When permitted by Architect, items may be removed to a suitable, protected storage location during selective demolition **and cleaned** and reinstalled in their original locations after selective demolition operations are complete.

3.5 SELECTIVE DEMOLITION PROCEDURES FOR SPECIFIC MATERIALS

A. Concrete: Demolish in sections. Cut concrete full depth at junctures with construction to remain and at regular intervals using power-driven saw, then remove concrete between saw cuts.

B. Masonry: Demolish in small sections. Cut masonry at junctures with construction to remain, using power-driven saw, then remove masonry between saw cuts.

C. Concrete Slabs-on-Grade: Saw-cut perimeter of area to be demolished, then break up and remove.

3.6 DISPOSAL OF DEMOLISHED MATERIALS

A. General: Except for items or materials indicated to be reused, salvaged, reinstalled, or otherwise indicated to remain Owner's property, remove demolished materials from Project site **and legally dispose of them in an EPA-approved landfill**.

1. Do not allow demolished materials to accumulate on-site.
2. Remove and transport debris in a manner that will prevent spillage on adjacent surfaces and areas.
3. Comply with requirements specified in Division 01 Section "Construction Waste Management and Disposal."

B. Burning: Do not burn demolished materials.

C. Disposal: Transport demolished materials off Owner's property and legally dispose of them.

3.7 CLEANING

A. Clean adjacent structures and improvements of dust, dirt, and debris caused by selective demolition operations. Return adjacent areas to condition existing before selective demolition operations began.

END OF SECTION 02 41 19

NOT FOR BIDDING PURPOSES

THIS PAGE INTENTIONALLY LEFT BLANK

NOT FOR BIDDING PURPOSES

SECTION 03 30 00

CAST-IN-PLACE CONCRETE

NOT FOR BIDDING PURPOSES

PART 1 - GENERAL

1.1 RELATED DOCUMENTS

A. Drawings and general provisions of the Contract, including General and Supplementary Conditions and Division 01 Specification Sections, apply to this Section.

1.2 SUMMARY

A. Section includes cast-in-place concrete, including formwork, reinforcement, concrete materials, mixture design, placement procedures, and finishes, for the following:

1. Footings.
2. Slabs-on-grade.

1.3 DEFINITIONS

A. Cementitious Materials: Portland cement alone or in combination with one or more of the following: blended hydraulic cement, fly ash and other pozzolans, ground granulated blast-furnace slag, and silica fume; subject to compliance with requirements.

1.4 SUBMITTALS

A. Product Data: For each type of product indicated.

B. Design Mixtures: For each concrete mixture. Submit alternate design mixtures when characteristics of materials, Project conditions, weather, test results, or other circumstances warrant adjustments.

1. Indicate amounts of mixing water to be withheld for later addition at Project site.

C. Steel Reinforcement Shop Drawings: Placing drawings that detail fabrication, bending, and placement. Include bar sizes, lengths, material, grade, bar schedules, stirrup spacing, bent bar diagrams, bar arrangement, splices and laps, mechanical connections, tie spacing, hoop spacing, and supports for concrete reinforcement.

D. Formwork Shop Drawings: Prepared by or under the supervision of a qualified professional engineer detailing fabrication, assembly, and support of formwork. Formwork submittal for elevated slabs and columns shall be signed and sealed by a professional engineer licensed in Pennsylvania.

1. Shoring and Reshoring: Indicate proposed schedule and sequence of stripping formwork, shoring removal, and reshoring installation and removal.

E. Construction Joint Layout: Indicate proposed construction joints required to construct the structure.

1. Location of construction joints is subject to approval of the Architect and Engineer.

F. Samples: For waterstops and vapor retarder.

G. Welding certificates.

H. Material Certificates: For each of the following, signed by manufacturers:

1. Cementitious materials.
2. Admixtures.
3. Form materials and form-release agents.
4. Steel reinforcement and accessories.
5. Fiber reinforcement.
6. Waterstops.
7. Curing compounds.
8. Floor and slab treatments.
9. Bonding agents.
10. Adhesives.
11. Vapor retarders.
12. Semirigid joint filler.
13. Joint-filler strips.
14. Repair materials.

I. Material Test Reports: For the following, from a qualified testing agency, indicating compliance with requirements:

1. Aggregates.

J. Floor surface flatness and levelness measurements indicating compliance with specified tolerances.

K. Field quality-control reports.

L. Minutes of preinstallation conference.

1.5 QUALITY ASSURANCE

A. Installer Qualifications: A qualified installer who employs on Project personnel qualified as ACI-certified Flatwork Technician and Finisher and a supervisor who is an ACI-certified Concrete Flatwork Technician.

B. Manufacturer Qualifications: A firm experienced in manufacturing ready-mixed concrete products and that complies with ASTM C 94/C 94M requirements for production facilities and equipment.

NOT FOR BIDDING PURPOSES

1. Manufacturer certified according to NRMCA's "Certification of Ready Mixed Concrete Production Facilities."

C. Source Limitations: Obtain each type or class of cementitious material of the same brand from the same manufacturer's plant, obtain aggregate from single source, and obtain admixtures from single source from single manufacturer.

D. Welding Qualifications: Qualify procedures and personnel according to AWS D1.4/D 1.4M, "Structural Welding Code - Reinforcing Steel."

E. ACI Publications: Comply with the following unless modified by requirements in the Contract Documents:

1. ACI 301, "Specifications for Structural Concrete," Sections 1 through 5.
2. ACI 117, "Specifications for Tolerances for Concrete Construction and Materials."

F. Concrete Testing Service: Engage a qualified independent testing agency to perform material evaluation tests and to design concrete mixtures.

G. Preinstallation Conference: Conduct conference at Project site.

1. Before submitting design mixtures, review concrete design mixture and examine procedures for ensuring quality of concrete materials. Require representatives of each entity directly concerned with cast-in-place concrete to attend, including the following:

a. Contractor's superintendent.
b. Independent testing agency responsible for concrete design mixtures.
c. Ready-mix concrete manufacturer.
d. Concrete subcontractor.
e. Special concrete finish subcontractor.

2. Review special inspection and testing and inspecting agency procedures for field quality control, concrete finishes and finishing, cold- and hot-weather concreting procedures, curing procedures, construction contraction and isolation joints, and joint-filler strips, semirigid joint fillers, forms and form removal limitations, shoring and reshoring procedures, vapor-retarder installation, anchor rod and anchorage device installation tolerances, steel reinforcement installation, floor and slab flatness and levelness measurement, concrete repair procedures, and concrete protection.

1.6 DELIVERY, STORAGE, AND HANDLING

A. Steel Reinforcement: Deliver, store, and handle steel reinforcement to prevent bending and damage.

B. Waterstops: Store waterstops under cover to protect from moisture, sunlight, dirt, oil, and other contaminants.

NOT FOR BIDDING PURPOSES

PART 2 - PRODUCTS

2.1 FORM-FACING MATERIALS

A. Smooth-Formed Finished Concrete: Form-facing panels that will provide continuous, true, and smooth concrete surfaces. Furnish in largest practicable sizes to minimize number of joints.

1. Plywood, metal, or other approved panel materials.
2. Exterior-grade plywood panels, suitable for concrete forms, complying with DOC PS 1, and as follows:

a. High-density overlay, Class 1 or better.
b. Medium-density overlay, Class 1 or better; mill-release agent treated and edge sealed.
c. Structural 1, B-B or better; mill oiled and edge sealed.
d. B-B (Concrete Form), Class 1 or better; mill oiled and edge sealed.

B. Rough-Formed Finished Concrete: Plywood, lumber, metal, or another approved material. Provide lumber dressed on at least two edges and one side for tight fit.

C. Forms for Pedestals, and Supports: Metal, glass-fiber-reinforced plastic, paper, or fiber tubes that will produce surfaces with gradual or abrupt irregularities not exceeding specified formwork surface class. Provide units with sufficient wall thickness to resist plastic concrete loads without detrimental deformation.

D. Chamfer Strips: Wood, metal, PVC, or rubber strips, 3/4 by 3/4 inch, minimum.

E. Form-Release Agent: Commercially formulated form-release agent that will not bond with, stain, or adversely affect concrete surfaces and will not impair subsequent treatments of concrete surfaces.

1. Formulate form-release agent with rust inhibitor for steel form-facing materials.

F. Form Ties: Factory-fabricated, removable or snap-off metal or glass-fiber-reinforced plastic form ties designed to resist lateral pressure of fresh concrete on forms and to prevent spalling of concrete on removal.

1. Furnish units that will leave no corrodible metal closer than 1 inch to the plane of exposed concrete surface.
2. Furnish ties that, when removed, will leave holes no larger than 1 inch in diameter in concrete surface.
3. Furnish ties with integral water-barrier plates to walls indicated to receive dampproofing or waterproofing.

2.2 STEEL REINFORCEMENT

A. Reinforcing Bars: ASTM A 615/A 615M, Grade 60, deformed.

B. Plain-Steel Welded Wire Reinforcement: ASTM A 185/A 185M, plain, fabricated from as-drawn steel wire into flat sheets.

NOT FOR BIDDING PURPOSES

2.3 REINFORCEMENT ACCESSORIES

A. Bar Supports: Bolsters, chairs, spacers, and other devices for spacing, supporting, and fastening reinforcing bars and welded wire reinforcement in place. Manufacture bar supports from steel wire, plastic, or precast concrete according to CRSI's "Manual of Standard Practice," of greater compressive strength than concrete and as follows:

1. For concrete surfaces exposed to view where legs of wire bar supports contact forms, use CRSI Class 1 plastic-protected steel wire or CRSI Class 2 stainless-steel bar supports.

2.4 CONCRETE MATERIALS

A. Cementitious Material: Use the following cementitious materials, of the same type, brand, and source, throughout Project:

1. Portland Cement: ASTM C 150, Type I, gray or white. Supplement with the following:

   a. Fly Ash: ASTM C 618, Class F or C.
   b. Ground Granulated Blast-Furnace Slag: ASTM C 989, Grade 100 or 120.

B. Silica Fume: ASTM C 1240, amorphous silica.

C. Normal-Weight Aggregates: ASTM C 33, Class 3S, coarse aggregate or better, graded. Provide aggregates from a single source with documented service record data of at least 10 years' satisfactory service in similar applications and service conditions using similar aggregates and cementitious materials.

1. Maximum Coarse-Aggregate Size: 1 inch for foundation concrete, 3/4 inch for elevated slabs.
2. Fine Aggregate: Free of materials with deleterious reactivity to alkali in cement.

D. Water: ASTM C 94/C 94M and potable.

2.5 ADMIXTURES

A. Air-Entraining Admixture: ASTM C 260.

B. Chemical Admixtures: Provide admixtures certified by manufacturer to be compatible with other admixtures and that will not contribute water-soluble chloride ions exceeding those permitted in hardened concrete. Do not use calcium chloride or admixtures containing calcium chloride.

1. Water-Reducing Admixture: ASTM C 494/C 494M, Type A.
2. Retarding Admixture: ASTM C 494/C 494M, Type B.
3. Water-Reducing and Retarding Admixture: ASTM C 494/C 494M, Type D.
4. High-Range, Water-Reducing Admixture: ASTM C 494/C 494M, Type F.
5. High-Range, Water-Reducing and Retarding Admixture: ASTM C 494/C 494M, Type G.
6. Plasticizing and Retarding Admixture: ASTM C 1017/C 1017M, Type II.

NOT FOR BIDDING PURPOSES

C. Color Pigment: ASTM C 979, synthetic mineral-oxide pigments or colored water-reducing admixtures; color stable, free of carbon black, nonfading, and resistant to lime and other alkalis.

1. Manufacturers: Subject to compliance with requirements, provide products by one of the following:

a. Davis Colors.
b. Scofield, L. M. Company.
c. Solomon Colors, Inc.

2. Color: As selected by Architect from manufacturer's full range.
3. Location: As indicated

2.6 WATERSTOPS

A. Self-Expanding Butyl Strip Waterstops: Manufactured rectangular or trapezoidal strip, butyl rubber with sodium bentonite or other hydrophilic polymers, for adhesive bonding to concrete, 3/4 by 1 inch.

1. Product: ADCOR ES by W.R. Grace.

2.7 VAPOR RETARDERS

A. Plastic Vapor Retarder: ASTM E 1745, Class B. Include manufacturer's recommended adhesive or pressure-sensitive tape. Minimum 15 mils nominal thickness.

1. Products:

a. Raven Industries Inc.; Vapor Block 15.
b. Stego Industries, LLC; Stego Wrap, 15 mils.

2.8 CURING MATERIALS

A. Evaporation Retarder: Waterborne, monomolecular film forming, manufactured for application to fresh concrete.

1. Products: Subject to compliance with requirements, provide one of the following:

a. Conspec by Dayton Superior; Aquafilm.
b. Dayton Superior Corporation; Sure Film (J-74).
c. Euclid Chemical Company (The), an RPM company; Eucobar.
d. L&M Construction Chemicals, Inc.; E-CON.
e. Meadows, W. R., Inc.; EVAPRE.
f. Sika Corporation; SikaFilm.

B. Absorptive Cover: AASHTO M 182, Class 2, burlap cloth made from jute or kenaf, weighing approximately 9 oz./sq. yd. when dry.

NOT FOR BIDDING PURPOSES

C. Moisture-Retaining Cover: ASTM C 171, polyethylene film or white burlap-polyethylene sheet.

D. Water: Potable.

E. Clear, Waterborne, Membrane-Forming Curing Compound: ASTM C 309, Type 1, Class B, 18 to 25 percent solids, nondissipating.

1. Products:

a. Dayton Superior Corporation; Safe Cure and Seal (J-19).
b. Euclid Chemical Company (The); Diamond Clear VOX.
c. L&M Construction Chemicals, Inc.; Dress & Seal WB.
d. Meadows, W. R., Inc.; Vocomp-20.
e. Sonneborn, Div. of ChemRex; Kure-N-Seal.

F. Clear, Waterborne, Membrane-Forming Curing and Sealing Compound: ASTM C 1315, Type 1, Class A.

1. Products:

a. Euclid Chemical Company (The); Super Diamond Clear VOX.
b. L&M Construction Chemicals, Inc.; Lumiseal WB Plus.
c. Meadows, W. R., Inc.; Vocomp-30.

2. Application: Apartments concrete slabs.

2.9 RELATED MATERIALS

A. Expansion- and Isolation-Joint-Filler Strips: ASTM D 1751, asphalt-saturated cellulosic fiber.

B. Semirigid Joint Filler: Two-component, semirigid, 100 percent solids, epoxy resin with a Type A shore durometer hardness of 80 per ASTM D 2240.

C. Bonding Agent: ASTM C 1059/C 1059M, Type II, non-redispersible, acrylic emulsion or styrene butadiene.

D. Epoxy Bonding Adhesive: ASTM C 881, two-component epoxy resin, capable of humid curing and bonding to damp surfaces, of class suitable for application temperature and of grade to suit requirements, and as follows:

1. Types I and II, non-load bearing and Types IV and V, load bearing, for bonding hardened or freshly mixed concrete to hardened concrete.

2.10 REPAIR MATERIALS

A. Repair Underlayment: Cement-based, polymer-modified, self-leveling product that can be applied in thicknesses from 1/8 inch and that can be feathered at edges to match adjacent floor elevations.

NOT FOR BIDDING PURPOSES

1. Cement Binder: ASTM C 150, portland cement or hydraulic or blended hydraulic cement as defined in ASTM C 219.
2. Primer: Product of underlayment manufacturer recommended for substrate, conditions, and application.
3. Aggregate: Well-graded, washed gravel, 1/8 to 1/4 inch or coarse sand as recommended by underlayment manufacturer.
4. Compressive Strength: Not less than 4100 psi at 28 days when tested according to ASTM C 109/C 109M.

2.11 CONCRETE MIXTURES, GENERAL

A. Prepare design mixtures for each type and strength of concrete, proportioned on the basis of laboratory trial mixture or field test data, or both, according to ACI 301.

1. Use a qualified independent testing agency for preparing and reporting proposed mixture designs based on laboratory trial mixtures.

B. Cementitious Materials: Limit percentage, by weight, of cementitious materials other than portland cement in concrete as follows:

1. Fly Ash: 25 percent.
2. Combined Fly Ash and Pozzolan: 25 percent.
3. Ground Granulated Blast-Furnace Slag: 25 percent.
4. Combined Fly Ash or Pozzolan and Ground Granulated Blast-Furnace Slag: 50 percent portland cement minimum, with fly ash or pozzolan not exceeding 25 percent.
5. Silica Fume: 10 percent.
6. Combined Fly Ash, Pozzolans, and Silica Fume: 35 percent with fly ash or pozzolans not exceeding 25 percent and silica fume not exceeding 10 percent.

C. Limit water-soluble, chloride-ion content in hardened concrete to 0.15 percent by weight of cement.

D. Admixtures: Use admixtures according to manufacturer's written instructions.

1. Use water-reducing, high-range water-reducing or plasticizing admixture in concrete, as required, for placement and workability.
2. Use water-reducing and retarding admixture when required by high temperatures, low humidity, or other adverse placement conditions.
3. Use water-reducing admixture in pumped concrete, concrete required to be watertight, and concrete with a water-cementitious materials ratio below 0.50.

E. Color Pigment: Add color pigment to concrete mixture according to manufacturer's written instructions and to result in hardened concrete color consistent with approved mockup.

2.12 CONCRETE MIXTURES FOR BUILDING ELEMENTS

A. Footings: Proportion normal-weight concrete mixture as follows:

1. Minimum Compressive Strength: As Indicated.

NOT FOR BIDDING PURPOSES

2. Maximum Water-Cementitious Materials Ratio: 0.50.
3. Slump Limit: 4 to 8 inches for concrete with verified slump of 2 to 4 inches before adding high-range water-reducing admixture or plasticizing admixture, plus or minus 1 inch.
4. Air Content: 5 percent, plus or minus 1.5 percent at point of delivery for 1-inch nominal maximum aggregate size.

B. Slabs-on-Grade: Proportion normal-weight concrete mixture as follows:

1. Minimum Compressive Strength: As Indicated.
2. Minimum Cementitious Materials Content: As indicated
3. Slump Limit: 4 inches, plus or minus 1 inch.
4. Air Content: Do not allow air content of trowel-finished floors to exceed 3 percent.
5. Synthetic Micro-Fiber: Uniformly disperse in concrete mixture at manufacturer's recommended rate, but not less than 1.5 lb/cu. yd.

2.13 FABRICATING REINFORCEMENT

A. Fabricate steel reinforcement according to CRSI's "Manual of Standard Practice."

2.14 CONCRETE MIXING

A. Ready-Mixed Concrete: Measure, batch, mix, and deliver concrete according to ASTM C 94/C 94M and ASTM C 1116/C 1116M, and furnish batch ticket information.

1. When air temperature is between 85 and 90 deg F, reduce mixing and delivery time from 1-1/2 hours to 75 minutes; when air temperature is above 90 deg F, reduce mixing and delivery time to 60 minutes.

PART 3 - EXECUTION

3.1 FORMWORK

A. Design, erect, shore, brace, and maintain formwork, according to ACI 301, to support vertical, lateral, static, and dynamic loads, and construction loads that might be applied, until structure can support such loads.

B. Construct formwork so concrete members and structures are of size, shape, alignment, elevation, and position indicated, within tolerance limits of ACI 117.

C. Limit concrete surface irregularities, designated by ACI 347 as abrupt or gradual, as follows:

1. Class A, 1/8 inch for smooth-formed finished surfaces.
2. Class B, 1/4 inch for rough-formed finished surfaces.

D. Construct forms tight enough to prevent loss of concrete mortar.

NOT FOR BIDDING PURPOSES

E. Fabricate forms for easy removal without hammering or prying against concrete surfaces. Provide crush or wrecking plates where stripping may damage cast concrete surfaces. Provide top forms for inclined surfaces steeper than 1.5 horizontal to 1 vertical.

1. Install keyways, reglets, recesses, and the like, for easy removal.
2. Do not use rust-stained steel form-facing material.

F. Set edge forms, bulkheads, and intermediate screed strips for slabs to achieve required elevations and slopes in finished concrete surfaces. Provide and secure units to support screed strips; use strike-off templates or compacting-type screeds.

G. Provide temporary openings for cleanouts and inspection ports where interior area of formwork is inaccessible. Close openings with panels tightly fitted to forms and securely braced to prevent loss of concrete mortar. Locate temporary openings in forms at inconspicuous locations.

H. Chamfer exterior corners and edges of permanently exposed concrete.

I. Form openings, chases, offsets, sinkages, keyways, reglets, blocking, screeds, and bulkheads required in the Work. Determine sizes and locations from trades providing such items.

J. Clean forms and adjacent surfaces to receive concrete. Remove chips, wood, sawdust, dirt, and other debris just before placing concrete.

K. Retighten forms and bracing before placing concrete, as required, to prevent mortar leaks and maintain proper alignment.

L. Coat contact surfaces of forms with form-release agent, according to manufacturer's written instructions, before placing reinforcement.

3.2 EMBEDDED ITEMS

A. Place and secure anchorage devices and other embedded items required for adjoining work that is attached to or supported by cast-in-place concrete. Use setting drawings, templates, diagrams, instructions, and directions furnished with items to be embedded.

1. Install anchor rods, accurately located, to elevations required and complying with tolerances in Section 7.5 of AISC's "Code of Standard Practice for Steel Buildings and Bridges."
2. Install reglets to receive waterproofing and to receive through-wall flashings in outer face of concrete frame at exterior walls, where flashing is shown at lintels, shelf angles, and other conditions.
3. Install dovetail anchor slots in concrete structures as indicated.

3.3 REMOVING AND REUSING FORMS

A. General: Formwork for sides of beams, walls, columns, and similar parts of the Work that does not support weight of concrete may be removed after cumulatively curing at not less than 50

NOT FOR BIDDING PURPOSES

deg F for 24 hours after placing concrete. Concrete has to be hard enough to not be damaged by form-removal operations and curing and protection operations need to be maintained.

1. Leave formwork for beam soffits, joists, slabs, and other structural elements that supports weight of concrete in place until concrete has achieved at least 70 percent of its 28-day design compressive strength.
2. Remove forms only if shores have been arranged to permit removal of forms without loosening or disturbing shores.

B. Clean and repair surfaces of forms to be reused in the Work. Split, frayed, delaminated, or otherwise damaged form-facing material will not be acceptable for exposed surfaces. Apply new form-release agent.

C. When forms are reused, clean surfaces, remove fins and laitance, and tighten to close joints. Align and secure joints to avoid offsets. Do not use patched forms for exposed concrete surfaces unless approved by Architect.

3.4 VAPOR RETARDERS

A. Sheet Vapor Retarders: Place, protect, and repair sheet vapor retarder according to ASTM E 1643 and manufacturer's written instructions.

1. Unroll vapor barrier with the longest dimension parallel with the direction of the concrete pour.
2. Vapor Barrier shall extend down foundation wall to top of footing.
3. Lap vapor barrier down face of footing wall to top of concrete footing. Seal vapor barrier to footing with manufacturer’s mastic.
4. Overlap joints 6 inches and seal with manufacturer’s tape.
5. Seal all penetrations (including pipes) per manufacturer’s instructions with manufacturer’s Tape and Mastic.
6. No penetration of the vapor barrier is allowed except for reinforcing steel and permanent utilities.
7. Repair damaged areas by cutting patches of vapor barrier, overlapping damaged area 6 inches and taping all four sides with tape.
8. Vapor Barrier installation shall be observed by the Owner’s rep prior to placement of the concrete.
9. Seal the different types of vapor retarders together by over lapping 6 inches and taping the intersection of the two vapor barriers.

3.5 STEEL REINFORCEMENT

A. General: Comply with CRSI's "Manual of Standard Practice" for placing reinforcement.

1. Do not cut or puncture vapor retarder. Repair damage and reseal vapor retarder before placing concrete.

B. Clean reinforcement of loose rust and mill scale, earth, ice, and other foreign materials that would reduce bond to concrete.

NOT FOR BIDDING PURPOSES

C. Accurately position, support, and secure reinforcement against displacement. Locate and support reinforcement with bar supports to maintain minimum concrete cover. Do not tack weld crossing reinforcing bars.

1. Weld reinforcing bars according to AWS D1.4/D 1.4M, where indicated.

D. Set wire ties with ends directed into concrete, not toward exposed concrete surfaces.

E. Install welded wire reinforcement in longest practicable lengths on bar supports spaced to minimize sagging. Lap edges and ends of adjoining sheets at least one mesh spacing. Offset laps of adjoining sheet widths to prevent continuous laps in either direction. Lace overlaps with wire.

3.6 JOINTS

A. General: Construct joints true to line with faces perpendicular to surface plane of concrete.

B. Construction Joints: Install so strength and appearance of concrete are not impaired, at locations indicated or as approved by Architect and Engineer.

1. Place joints perpendicular to main reinforcement. Continue reinforcement across construction joints unless otherwise indicated. Do not continue reinforcement through sides of strip placements of floors and slabs.
2. Form keyed joints as indicated. Embed keys at least 1-1/2 inches into concrete.
3. Locate joints for beams, slabs, joists, and girders in the middle third of spans. Offset joints in girders a minimum distance of twice the beam width from a beam-girder intersection.
4. Locate horizontal joints in walls and columns at underside of floors, slabs, beams, and girders and at the top of footings or floor slabs.
5. Space vertical joints in walls as indicated. Locate joints beside piers integral with walls, near corners, and in concealed locations where possible.
6. Where indicated, use a bonding agent at locations where fresh concrete is placed against hardened or partially hardened concrete surfaces.

C. Shrinkage Joints in Slabs-on-Grade: Form weakened-plane contraction joints, sectioning concrete into areas as indicated. Construct contraction joints for a depth equal to at least one-fourth of concrete thickness as follows:

1. Grooved Joints (Exposed Joints): Form contraction joints after initial floating by grooving and finishing each edge of joint to a radius of 1/8 inch. Repeat grooving of contraction joints after applying surface finishes. Eliminate groover tool marks on concrete surfaces.
2. Sawed Joints: Form contraction joints with power saws equipped with shatterproof abrasive or diamond-rimmed blades. Cut 1/8-inch-wide joints into concrete when cutting action will not tear, abrade, or otherwise damage surface and before concrete develops random contraction cracks.

D. Isolation Joints in Slabs-on-Grade: After removing formwork, install joint-filler strips at slab junctions with vertical surfaces, such as column pedestals, foundation walls, grade beams, and other locations, as indicated.

NOT FOR BIDDING PURPOSES

1. Extend joint-filler strips full width and depth of joint, terminating flush with finished concrete surface unless otherwise indicated.
2. Terminate full-width joint-filler strips not less than 1/2 inch or more than 1 inch below finished concrete surface where joint sealants, specified in Division 07 Section "Joint Sealants," are indicated.
3. Install joint-filler strips in lengths as long as practicable. Where more than one length is required, lace or clip sections together.

E. Doweled Joints: Install dowel bars and support assemblies at joints where indicated. Lubricate or asphalt coat one-half of dowel length to prevent concrete bonding to one side of joint.

3.7 WATERSTOPS

A. Self-Expanding Strip Waterstops: Install in construction joints and at other locations indicated, according to manufacturer's written instructions, adhesive bonding, mechanically fastening, and firmly pressing into place. Install in longest lengths practicable.

3.8 CONCRETE PLACEMENT

A. Before placing concrete, verify that installation of formwork, reinforcement, and embedded items is complete and that required inspections have been performed.

B. Do not add water to concrete during delivery, at Project site, or during placement unless approved by Architect.

C. Deposit concrete continuously in one layer or in horizontal layers of such thickness that no new concrete will be placed on concrete that has hardened enough to cause seams or planes of weakness. If a section cannot be placed continuously, provide construction joints as indicated. Deposit concrete to avoid segregation.

1. Deposit concrete in horizontal layers of depth to not exceed formwork design pressures and in a manner to avoid inclined construction joints.
2. Consolidate placed concrete with mechanical vibrating equipment according to ACI 301.
3. Do not use vibrators to transport concrete inside forms. Insert and withdraw vibrators vertically at uniformly spaced locations to rapidly penetrate placed layer and at least 6 inches into preceding layer. Do not insert vibrators into lower layers of concrete that have begun to lose plasticity. At each insertion, limit duration of vibration to time necessary to consolidate concrete and complete embedment of reinforcement and other embedded items without causing mixture constituents to segregate.

D. Deposit and consolidate concrete for floors and slabs in a continuous operation, within limits of construction joints, until placement of a panel or section is complete.

1. Consolidate concrete during placement operations so concrete is thoroughly worked around reinforcement and other embedded items and into corners.
2. Maintain reinforcement in position on chairs during concrete placement.
3. Screed slab surfaces with a straightedge and strike off to correct elevations.
4. Slope surfaces uniformly to drains where required.

NOT FOR BIDDING PURPOSES

5. Begin initial floating using bull floats or darbies to form a uniform and open-textured surface plane, before excess bleedwater appears on the surface. Do not further disturb slab surfaces before starting finishing operations.

E. Cold-Weather Placement: Comply with ACI 306.1 and as follows. Protect concrete work from physical damage or reduced strength that could be caused by frost, freezing actions, or low temperatures.

1. When average high and low temperature is expected to fall below 40 deg F for three successive days, maintain delivered concrete mixture temperature within the temperature range required by ACI 301.
2. Do not use frozen materials or materials containing ice or snow. Do not place concrete on frozen subgrade or on subgrade containing frozen materials.
3. Do not use calcium chloride, salt, or other materials containing antifreeze agents or chemical accelerators unless otherwise specified and approved in mixture designs.

F. Hot-Weather Placement: Comply with ACI 301 and as follows:

1. Maintain concrete temperature below 90 deg F at time of placement. Chilled mixing water or chopped ice may be used to control temperature, provided water equivalent of ice is calculated to total amount of mixing water. Using liquid nitrogen to cool concrete is Contractor's option.
2. Fog-spray forms, steel reinforcement, and subgrade just before placing concrete. Keep subgrade uniformly moist without standing water, soft spots, or dry areas.

3.9 FINISHING FORMED SURFACES

A. Rough-Formed Finish: As-cast concrete texture imparted by form-facing material with tie holes and defects repaired and patched. Remove fins and other projections that exceed specified limits on formed-surface irregularities.

1. Apply to concrete surfaces not exposed to public view.

B. Smooth-Formed Finish: As-cast concrete texture imparted by form-facing material, arranged in an orderly and symmetrical manner with a minimum of seams. Repair and patch tie holes and defects. Remove fins and other projections that exceed specified limits on formed-surface irregularities.

1. Apply to concrete surfaces exposed to public view,

C. Rubbed Finish: Apply the following to smooth-formed finished as-cast concrete surfaces exposed to public view:

1. Smooth-Rubbed Finish: Not later than one day after form removal, moisten concrete surfaces and rub with carborundum brick or another abrasive until producing a uniform color and texture. Do not apply cement grout other than that created by the rubbing process.

D. Related Unformed Surfaces: At tops of walls, horizontal offsets, and similar unformed surfaces adjacent to formed surfaces, strike off smooth and finish with a texture matching adjacent

NOT FOR BIDDING PURPOSES

formed surfaces. Continue final surface treatment of formed surfaces uniformly across adjacent unformed surfaces unless otherwise indicated.

3.10 FINISHING FLOORS AND SLABS

A. General: Comply with ACI 302.1R recommendations for screeding, restraightening, and finishing operations for concrete surfaces. Do not wet concrete surfaces.

B. Float Finish: Consolidate surface with power-driven floats or by hand floating if area is small or inaccessible to power driven floats. Restraighten, cut down high spots, and fill low spots. Repeat float passes and restraightening until surface is left with a uniform, smooth, granular texture.

1. Apply float finish to surfaces to receive trowel finish.

C. Trowel Finish: After applying float finish, apply first troweling and consolidate concrete by hand or power-driven trowel. Continue troweling passes and restraighten until surface is free of trowel marks and uniform in texture and appearance. Grind smooth any surface defects that would telegraph through applied coatings or floor coverings.

1. Apply a trowel finish to surfaces exposed to view or to be covered with resilient flooring, carpet, ceramic or quarry tile set over a cleavage membrane, paint, or another thin-film-finish coating system.
2. Finish surfaces to the following tolerances, according to ASTM E 1155, for a randomly trafficked floor surface:

   a. Specified overall values of flatness, F(F) 25; and of levelness, F(L) 20; with minimum local values of flatness, F(F) 17; and of levelness, F(L) 15, for slabs-on-grade.
   b. Specified overall value of flatness, F(F) 30; with minimum local value of flatness, F(F) 24; for suspended slabs.

D. Trowel and Fine-Broom Finish: Apply a first trowel finish to surfaces where ceramic or quarry tile is to be installed by either thickset or thin-set method. While concrete is still plastic, slightly scarify surface with a fine broom.

1. Comply with flatness and levelness tolerances for trowel-finished floor surfaces.

E. Broom Finish: Apply a broom finish to exposed exterior concrete platforms, steps, and ramps, and elsewhere as indicated.

1. Immediately after float finishing, roughen trafficked surface by brooming with fiber-bristle broom perpendicular to main traffic route. Coordinate required final finish with Architect before application.

3.11 MISCELLANEOUS CONCRETE ITEMS

A. Filling In: Fill in holes and openings left in concrete structures after work of other trades is in place unless otherwise indicated. Mix, place, and cure concrete, as specified, to blend with in-

NOT FOR BIDDING PURPOSES

place construction. Provide other miscellaneous concrete filling indicated or required to complete the Work.

B. Curbs: Provide monolithic finish to interior curbs by stripping forms while concrete is still green and by steel-troweling surfaces to a hard, dense finish with corners, intersections, and terminations slightly rounded.

C. Equipment Bases and Foundations: Provide machine and equipment bases and foundations as shown on Drawings. Set anchor bolts for machines and equipment at correct elevations, complying with diagrams or templates from manufacturer furnishing machines and equipment.

3.12 CONCRETE PROTECTING AND CURING

A. General: Protect freshly placed concrete from premature drying and excessive cold or hot temperatures. Comply with ACI 306.1 for cold-weather protection and ACI 301 for hot-weather protection during curing.

B. Evaporation Retarder: Apply evaporation retarder to unformed concrete surfaces if hot, dry, or windy conditions cause moisture loss approaching 0.2 lb/sq. ft. x h before and during finishing operations. Apply according to manufacturer's written instructions after placing, screeding, and bull floating or darbying concrete, but before float finishing.

C. Formed Surfaces: Cure formed concrete surfaces, including underside of beams, supported slabs, and other similar surfaces. If forms remain during curing period, moist cure after loosening forms. If removing forms before end of curing period, continue curing for the remainder of the curing period.

D. Unformed Surfaces: Begin curing immediately after finishing concrete. Cure unformed surfaces, including floors and slabs, concrete floor toppings, and other surfaces.

E. Cure concrete according to ACI 308.1, by one or a combination of the following methods:

1. Moisture Curing: Keep surfaces continuously moist for not less than seven days with the following materials:

   a. Water.
   b. Continuous water-fog spray.
   c. Absorptive cover, water saturated, and kept continuously wet. Cover concrete surfaces and edges with 12-inch lap over adjacent absorptive covers.

2. Moisture-Retaining-Cover Curing: Cover concrete surfaces with moisture-retaining cover for curing concrete, placed in widest practicable width, with sides and ends lapped at least 12 inches, and sealed by waterproof tape or adhesive. Cure for not less than seven days. Immediately repair any holes or tears during curing period using cover material and waterproof tape.

   a. Cure concrete surfaces to receive floor coverings with either a moisture-retaining cover or a curing compound that the manufacturer certifies will not interfere with bonding of floor covering used on Project.

NOT FOR BIDDING PURPOSES

3. Curing Compound: Apply uniformly in continuous operation by power spray or roller according to manufacturer's written instructions. Recoat areas subjected to heavy rainfall within three hours after initial application. Maintain continuity of coating and repair damage during curing period.

   a. Removal: After curing period has elapsed, remove curing compound without damaging concrete surfaces by method recommended by curing compound manufacturer, unless manufacturer certifies curing compound will not interfere with bonding of floor covering used on Project.

4. Curing and Sealing Compound: Apply uniformly to floors and slabs indicated in a continuous operation by power spray or roller according to manufacturer's written instructions. Recoat areas subjected to heavy rainfall within three hours after initial application. Repeat process 24 hours later and apply a second coat. Maintain continuity of coating and repair damage during curing period.

3.13 JOINT FILLING

A. Prepare, clean, and install joint filler according to manufacturer's written instructions.

   1. Defer joint filling until concrete has aged at least six month(s). Do not fill joints until construction traffic has permanently ceased.

B. Remove dirt, debris, saw cuttings, curing compounds, and sealers from joints; leave contact faces of joint clean and dry.

C. Install semirigid joint filler full depth in saw-cut joints and at least 2 inches deep in formed joints. Overfill joint and trim joint filler flush with top of joint after hardening.

3.14 CONCRETE SURFACE REPAIRS

A. Defective Concrete: Repair and patch defective areas when approved by Architect. Remove and replace concrete that cannot be repaired and patched to Architect's approval.

B. Patching Mortar: Mix dry-pack patching mortar, consisting of one part portland cement to two and one-half parts fine aggregate passing a No. 16 sieve, using only enough water for handling and placing.

C. Repairing Formed Surfaces: Surface defects include color and texture irregularities, cracks, spalls, air bubbles, honeycombs, rock pockets, fins and other projections on the surface, and stains and other discolorations that cannot be removed by cleaning.

   1. Immediately after form removal, cut out honeycombs, rock pockets, and voids more than 1/2 inch in any dimension to solid concrete. Limit cut depth to 3/4 inch. Make edges of cuts perpendicular to concrete surface. Clean, dampen with water, and brush-coat holes and voids with bonding agent. Fill and compact with patching mortar before bonding agent has dried. Fill form-tie voids with patching mortar or cone plugs secured in place with bonding agent.

NOT FOR BIDDING PURPOSES

2. Repair defects on surfaces exposed to view by blending white portland cement and standard portland cement so that, when dry, patching mortar will match surrounding color. Patch a test area at inconspicuous locations to verify mixture and color match before proceeding with patching. Compact mortar in place and strike off slightly higher than surrounding surface.
3. Repair defects on concealed formed surfaces that affect concrete's durability and structural performance as determined by Architect.

D. Repairing Unformed Surfaces: Test unformed surfaces, such as floors and slabs, for finish and verify surface tolerances specified for each surface. Correct low and high areas. Test surfaces sloped to drain for trueness of slope and smoothness; use a sloped template.

1. Repair finished surfaces containing defects. Surface defects include spalls, popouts, honeycombs, rock pockets, crazing and cracks in excess of 0.01 inch wide or that penetrate to reinforcement or completely through unreinforced sections regardless of width, and other objectionable conditions.
2. After concrete has cured at least 14 days, correct high areas by grinding.
3. Correct localized low areas during or immediately after completing surface finishing operations by cutting out low areas and replacing with patching mortar. Finish repaired areas to blend into adjacent concrete.
4. Correct other low areas scheduled to receive floor coverings with a repair underlayment. Prepare, mix, and apply repair underlayment and primer according to manufacturer's written instructions to produce a smooth, uniform, plane, and level surface. Feather edges to match adjacent floor elevations.
5. Correct other low areas scheduled to remain exposed with a repair topping. Cut out low areas to ensure a minimum repair topping depth of 1/4 inch to match adjacent floor elevations. Prepare, mix, and apply repair topping and primer according to manufacturer's written instructions to produce a smooth, uniform, plane, and level surface.
6. Repair defective areas, except random cracks and single holes 1 inch or less in diameter, by cutting out and replacing with fresh concrete. Remove defective areas with clean, square cuts and expose steel reinforcement with at least a 3/4-inch clearance all around. Dampen concrete surfaces in contact with patching concrete and apply bonding agent. Mix patching concrete of same materials and mixture as original concrete except without coarse aggregate. Place, compact, and finish to blend with adjacent finished concrete. Cure in same manner as adjacent concrete.
7. Repair random cracks and single holes 1 inch or less in diameter with patching mortar. Groove top of cracks and cut out holes to sound concrete and clean off dust, dirt, and loose particles. Dampen cleaned concrete surfaces and apply bonding agent. Place patching mortar before bonding agent has dried. Compact patching mortar and finish to match adjacent concrete. Keep patched area continuously moist for at least 72 hours.

E. Perform structural repairs of concrete, subject to Architect and Engineer’s approval, using epoxy adhesive and patching mortar.

F. Repair materials and installation not specified above may be used, subject to Architect's approval.

NOT FOR BIDDING PURPOSES

3.15 FIELD QUALITY CONTROL

A. Testing and Inspecting: Owner will engage a special inspector to perform field tests and inspections and prepare test reports.

B. Inspections:

1. Steel reinforcement size, spacing, placement, support, cover and laps.
2. Dowel size, spacing, placement, support and embedment.
3. Bolts, studs, and other embedments, and size, location and embedment depth.
4. Verification of use of required design mixture.
5. Concrete placement, including conveying and depositing.
6. Curing procedures and maintenance of curing temperature.
7. Verification of concrete strength before removal of shores and forms from beams and slabs.
8. Inspection reports shall be submitted to the Owner, Architect, Engineer and Contractor within 48 hours of inspection.

C. Concrete Tests: Testing of composite samples of fresh concrete obtained according to ASTM C 172 shall be performed according to the following requirements:

1. Testing Frequency: Obtain at least one composite sample for each 100 cu. yd. or fraction thereof of each concrete mixture placed each day.

   a. When frequency of testing will provide fewer than five compressive-strength tests for each concrete mixture, testing shall be conducted from at least five randomly selected batches or from each batch if fewer than five are used.

2. Slump: ASTM C 143/C 143M; one test at point of placement for each composite sample, but not less than one test for each day's pour of each concrete mixture. Perform additional tests when concrete consistency appears to change.
3. Air Content: ASTM C 231, pressure method, for normal-weight concrete; one test for each composite sample, but not less than one test for each day's pour of each concrete mixture.
4. Concrete Temperature: ASTM C 1064/C 1064M; one test hourly when air temperature is 40 deg F and below and when 80 deg F and above, and one test for each composite sample.
5. Compression Test Specimens: ASTM C 31/C 31M.

   a. Cast and laboratory cure two sets of two standard cylinder specimens for each composite sample.

6. Compressive-Strength Tests: ASTM C 39/C 39M; test one set of two laboratory-cured specimens at 7 days and one set of two specimens at 28 days.

   a. A compressive-strength test shall be the average compressive strength from a set of two specimens obtained from same composite sample and tested at age indicated.

7. When strength of field-cured cylinders is less than 85 percent of companion laboratory-cured cylinders, Contractor shall evaluate operations and provide corrective procedures for protecting and curing in-place concrete.

NOT FOR BIDDING PURPOSES

8. Strength of each concrete mixture will be satisfactory if every average of any three consecutive compressive-strength tests equals or exceeds specified compressive strength and no compressive-strength test value falls below specified compressive strength by more than 500 psi.
9. Test results shall be reported in writing to Architect, concrete manufacturer, and Contractor within 48 hours of testing. Reports of compressive-strength tests shall contain Project identification name and number, date of concrete placement, name of concrete testing and inspecting agency, location of concrete batch in Work, design compressive strength at 28 days, concrete mixture proportions and materials, compressive breaking strength, and type of break for both 7- and 28-day tests.
10. Nondestructive Testing: Impact hammer, sonoscope, or other nondestructive device may be permitted by Architect but will not be used as sole basis for approval or rejection of concrete.
11. Additional Tests: Testing and inspecting agency shall make additional tests of concrete when test results indicate that slump, air entrainment, compressive strengths, or other requirements have not been met, as directed by Architect. Testing and inspecting agency may conduct tests to determine adequacy of concrete by cored cylinders complying with ASTM C 42/C 42M or by other methods as directed by Architect.
12. Additional testing and inspecting, at Contractor's expense, will be performed to determine compliance of replaced or additional work with specified requirements.
13. Correct deficiencies in the Work that test reports and inspections indicate do not comply with the Contract Documents.

D. Measure floor and slab flatness and levelness according to ASTM E 1155 within 48 hours of finishing.

END OF SECTION 03 30 00

NOT FOR BIDDING PURPOSES

SECTION 03 36 00

CONCRETE FLOOR SEALER

PART 1 -GENERAL

1.1 RELATED DOCUMENTS

A. Drawings and general provisions of the Contract, including General and Supplementary Conditions and Division 01 Specification Sections, apply to this Section.

1.2 SUMMARY

A. Section Includes:

1. Penetrating liquid floor treatment for horizontal concrete surfaces.

1.3 PREINSTALLATION MEETINGS

A. Preinstallation Conference: Conduct conference at Project site.

1.4 ACTION SUBMITTALS

A. Product Data: For each type of product.

B. Manufacturer's Installation Instructions.

1.5 QUALITY ASSURANCE

A. Qualification Data: For Installer and manufacturer.

1.6 DELIVERY, STORAGE, AND HANDLING

A. Deliver materials in original packages and containers, with seals unbroken, bearing manufacturer's labels indicating brand name and directions for storage, mixing with other components, and application.

B. Store materials to comply with manufacturer's written instructions to prevent deterioration from moisture or other detrimental effects.

1.7 FIELD CONDITIONS

A. Environmental Limitations: Comply with manufacturer's written instructions for substrate temperature and moisture content, ambient temperature and humidity, ventilation, and other conditions affecting penetrating liquid floor treatment for concrete performance.

1. Do not install penetrating liquid floor treatment for horizontal concrete surfaces when air temperature or concrete surface temperature is less than 40 degrees F.
2. Maintain concrete floor surface temperature above freezing during and after installation of concrete

NOT FOR BIDDING PURPOSES

liquid floor treatment until liquid floor treatment is cured.

B. Close areas to traffic during penetrating liquid floor treatment application and, after application, for time period recommended in writing by liquid floor treatment manufacturer.

PART 2 -PRODUCTS

2.1 LIQUID FLOOR TREATMENTS

A. Penetrating Liquid Floor Treatment: Clear, chemically reactive, waterborne solution of inorganic silicate or siliconate materials and proprietary components; odorless; that penetrates, hardens, and densifies concrete surfaces.

1. Basis of Design Product: Subject to compliance with requirements, provide L&M Construction Chemicals; Dress and Seal WB30, or comparable product by one of the following:

a. Bone Dry Products.
b. Curecrete Distribution Inc.
c. Euclid Chemical Company (The); an RPM company.
d. PROSOCO, Inc; Consolideck LS.
e. Vexcon Chemicals Inc.
f. W. R. Meadows, Inc.

PART 3 -EXECUTION

3.1 EXAMINATION

A. Examine the following for uncured concrete surfaces:

1. Verify final troweling is complete of uncured concrete.
2. Verify uncured concrete is set sufficiently so application of liquid floor treatment will not mar concrete surface.

B. Examine the following for cured concrete surfaces:

1. Verify concrete floor surfaces are free of substances that may impair penetration of concrete liquid floor treatment.

3.2 PREPARATION

A. Remove membrane forming curing compounds and other surface contaminates capable of impairing concrete liquid floor treatment penetration into concrete.

B. Remove curing compounds, sealers, oil, dirt, laitance, and other contaminants and complete surface repairs.

NOT FOR BIDDING PURPOSES

A. Allow floor to dry. Broom clean floor surface to remove loose dust and dirt.

3.3 LIQUID FLOOR TREATMENT APPLICATION

A. Penetrating Liquid Floor Treatment for Uncured and Cured Horizontal Concrete Surfaces:

1. Prepare, apply, and finish penetrating liquid floor treatment according to manufacturer's written instructions.

3.4 PROTECTION OF LIQUID FLOOR TREATMENTS

A. Protect liquid floor treatment from damage and wear during the remainder of construction period. Use protective methods and materials, including temporary covering, recommended in writing by liquid floor treatments installer.

END OF SECTION 03 36 00

NOT FOR BIDDING PURPOSES

NOT FOR BIDDING PURPOSES

THIS PAGE INTENTIONALLY LEFT BLANK.

SECTION 04 20 00

UNIT MASONRY

NOT FOR BIDDING PURPOSES

PART 1 - GENERAL

1.1 SUMMARY

A. Section Includes:

1. Concrete masonry units (CMU's).
2. Face brick.

B. Related Sections:

1. Division 05 Section "Metal Fabrications" for furnishing steel lintels and shelf angles for unit masonry.
2. Division 07 Section "Sheet Metal Flashing and Trim" for furnishing manufactured reglets installed in masonry joints.

1.2 SUBMITTALS

A. Product Data: For each type of product indicated.

B. Shop Drawings: For reinforcing steel. Detail bending and placement of unit masonry reinforcing bars. Comply with ACI 315, "Details and Detailing of Concrete Reinforcement."

C. Samples for Verification: For each type and color of exposed masonry unit and colored mortar.

D. Material Certificates: For each type and size of product indicated. For masonry units include data on material properties.

E. Mix Designs: For each type of mortar and grout. Include description of type and proportions of ingredients.

1. Include test reports for mortar mixes required to comply with property specification. Test according to ASTM C 109/C 109M for compressive strength, ASTM C 1506 for water retention, and ASTM C 91 for air content.
2. Include test reports, according to ASTM C 1019, for grout mixes required to comply with compressive strength requirement.

1.3 QUALITY ASSURANCE

A. Masonry Standard: Comply with ACI 530.1/ASCE 6/TMS 602 unless modified by requirements in the Contract Documents.

B. Mockups: Build mockups to verify selections made under sample submittals and to demonstrate aesthetic effects and set quality standards for materials and execution.

1. Build mockups for each type of exposed unit masonry construction in sizes approximately 96 inches (2400 mm) long by 96 inches (2400 mm) high by full thickness, including accessories.

   a. Include a sealant-filled joint at least 16 inches (400 mm) long in mockup.
   b. Include lower corner of window opening framed with stone trim at upper corner of exterior wall mockup. Make opening approximately 16 inches (300 mm) wide by 16 inches (400 mm) high.
   c. Include through-wall flashing installed for a 24-inch (600-mm) length in corner of exterior wall mockup approximately 16 inches (400 mm) down from top of mockup, with a 12-inch (300-mm) length of flashing left exposed to view (omit masonry above half of flashing).
   d. Include metal studs, sheathing, sheathing joint-and-penetration treatment, veneer anchors, flashing, cavity drainage material, and weep holes in mockup.

2. Where masonry is to match existing, erect mockups adjacent and parallel to existing surface.
3. Clean one-half of exposed faces of mockups with masonry cleaner as indicated.
4. Protect accepted mockups from the elements with weather-resistant membrane.
5. Approval of mockups is for color, texture, and blending of masonry units; relationship of mortar and sealant colors to masonry unit colors; tooling of joints; and aesthetic qualities of workmanship.

   a. Approval of mockups does not constitute approval of deviations from the Contract Documents contained in mockups unless such deviations are specifically approved by Architect in writing.

6. Remove mockups upon notification from Owner/Architect.

1.4 PROJECT CONDITIONS

A. Cold-Weather Requirements: Do not use frozen materials or materials mixed or coated with ice or frost. Do not build on frozen substrates. Remove and replace unit masonry damaged by frost or by freezing conditions. Comply with cold-weather construction requirements contained in ACI 530.1/ASCE 6/TMS 602.

B. Hot-Weather Requirements: Comply with hot-weather construction requirements contained in ACI 530.1/ASCE 6/TMS 602.

NOT FOR BIDDING PURPOSES

PART 2 - PRODUCTS

2.1 MASONRY UNITS, GENERAL

A. Defective Units: Referenced masonry unit standards may allow a certain percentage of units to contain chips, cracks, or other defects exceeding limits stated in the standard. Do not use units where such defects will be exposed in the completed Work.

B. Fire-Resistance Ratings: Where indicated, provide units that comply with requirements for fire-resistance ratings indicated as determined by testing according to ASTM E 119, by equivalent masonry thickness, or by other means, as acceptable to authorities having jurisdiction.

2.2 CONCRETE MASONRY UNITS

A. Shapes: Provide shapes indicated and for lintels, corners, jambs, sashes, movement joints, headers, bonding, and other special conditions.

B. CMUs: ASTM C 90.

1. Density Classification: Normal weight, unless otherwise indicated.

2.3 CONCRETE LINTELS

A. General: Provide one of the following:

B. Concrete Lintels: ASTM C 1623, matching CMUs in color, texture, and density classification; and with reinforcing bars indicated

C. Concrete Lintels: Precast or formed-in-place concrete lintels complying with requirements in Division 03 Section "Cast-in-Place Concrete," and with reinforcing bars indicated.

D. Masonry Lintels: Prefabricated or built-in-place masonry lintels made from bond beam CMUs with reinforcing bars placed as indicated and filled with coarse grout.

2.4 BRICK

A. General: Provide shapes indicated and as follows:

1. For ends of sills and caps and for similar applications that would otherwise expose unfinished brick surfaces, provide units without cores or frogs and with exposed surfaces finished.
2. Provide special shapes for applications where shapes produced by sawing would result in sawed surfaces being exposed to view.

B. Face Brick: Facing brick complying with ASTM C 216.

1. Basis-of-Design Product: Subject to compliance with requirements, provide the following:

NOT FOR BIDDING PURPOSES

a. Manufacturer: Triangle Brick
b. Description: Modular Brick
c. Name: Key West
d. Product #: 1102
e. Special shape at Water table (Main entrance & Gymnasium Entrance only)

2. Grade: SW.
3. Type: FBS
4. Initial Rate of Absorption: Less than 30 g/30 sq. in. (30 g/194 sq. cm) per minute when tested per ASTM C 67.
5. Efflorescence: Provide brick that has been tested according to ASTM C 67 and is rated "not effloresced."
6. Size (Actual Dimensions): 3-5/8 inches (92 mm) wide by 2-1/4 inches (57 mm) high by 7-5/8 inches (194 mm) long.

2.5 MORTAR AND GROUT MATERIALS

A. Regional Materials: Provide aggregate for mortar and grout [, cement, and lime] that have been extracted, harvested, or recovered, as well as manufactured, within 500 miles (800 km) of Project site.

B. Portland Cement: ASTM C 150, Type I or II, except Type III may be used for cold-weather construction. Provide natural color or white cement as required to produce mortar color indicated.

C. Hydrated Lime: ASTM C 207, Type S.

D. Portland Cement-Lime Mix: Packaged blend of portland cement and hydrated lime containing no other ingredients.

E. Masonry Cement: ASTM C 91.

1. Basis-of-Design Product: Subject to compliance with requirements, provide the following:
a. Manufacturer: Argos
b. Color: Oyster/Orange

F. Water: Potable.

2.6 REINFORCEMENT

A. Masonry Joint Reinforcement, General: ASTM A 951/A 951M.

2.7 TIES AND ANCHORS

A. Materials: Provide ties and anchors specified in this article that are made from materials that comply with the following unless otherwise indicated:

NOT FOR BIDDING PURPOSES

1. Stainless-Steel Wire: ASTM A 580/A 580M, Type 304.
2. Steel Stud with Gypsum Sheathing: Provide Heckmann "#75 Pos-I-Tie" two-piece system as follows:

    a. Barrel Section: One-piece screw consisting of stainless steel barrel, washer, flanged head and eye to receive Pos-I-Tie wire tie; designed to seat barrel directly on structural portion of backup, with flanged head covering fastener hole.

        1) Barrel shaft length: 3-1/2 inch, with stainless steel self-drilling screw.
        2) 3/4-inch neoprene washer under flanged head will seal surface penetration of anchor.

    b. Wire Tie: Stainless Steel: Type 304.

        1) Thickness: 3/16-inch diameter; ASTM A580.
        2) Shape: Triangular.

3. Control Joint Stabilizers:

    a. "Slip-Set Stabilizer"; Hohman & Barnard.
    b. "DA 2200"; Dur-O-Wal.
    c. "No. 353"; Heckmann.
    d. "1700"; Wire Bond.

2.8 EMBEDDED FLASHING MATERIALS

A. Metal Flashing: Provide metal flashing complying with Division 07 Section "Sheet Metal Flashing and Trim:

2.9 MISCELLANEOUS MASONRY ACCESSORIES

A. Compressible Filler: Premolded filler strips complying with ASTM D 1056, Grade 2A1; compressible up to 35 percent; of width and thickness indicated; formulated from PVC.

B. Bond-Breaker Strips: Asphalt-saturated, organic roofing felt complying with ASTM D 226, Type I (No. 15 asphalt felt).

C. Weep/Vent Products: Use [one of] the following unless otherwise indicated:

1. Cellular Plastic Weep/Vent: One-piece, flexible extrusion made from UV-resistant polypropylene copolymer, full height and width of head joint and depth 1/8 inch (3 mm) less than depth of outer wythe, in color selected from manufacturer's standard.

    a. Products: Subject to compliance with requirements, available products that may be incorporated into the Work include, but are not limited to, the following:

        1) Advanced Building Products Inc.; Mortar Maze weep vent.
        2) Blok-Lok Limited; Cell-Vent.

NOT FOR BIDDING PURPOSES

3) Dayton Superior Corporation, Dur-O-Wal Division; Cell Vents.
4) Heckmann Building Products Inc.; No. 85 Cell Vent.
5) Hohmann & Barnard, Inc.; Quadro-Vent.
6) Wire-Bond; Cell Vent.

D. Cavity Drainage Material: Free-draining mesh, made from polymer strands that will not degrade within the wall cavity.

1. Products: Subject to compliance with requirements, available products that may be incorporated into the Work include, but are not limited to, the following:

a. Advanced Building Products Inc.; [Mortar Break] [Mortar Break II].
b. Archovations, Inc.; CavClear Masonry Mat.
c. Dayton Superior Corporation, Dur-O-Wal Division; Polytite MortarStop.
d. Mortar Net USA, Ltd.; Mortar Net.

2. Provide one of the following configurations:

a. Strips, full-depth of cavity and 10 inches (250 mm) high, with dovetail shaped notches 7 inches (175 mm) deep.

2.10 MASONRY CLEANERS

A. Proprietary Acidic Cleaner: Manufacturer's standard-strength cleaner designed for removing mortar/grout stains, efflorescence, and other new construction stains from new masonry without discoloring or damaging masonry surfaces. Use product expressly approved for intended use by cleaner manufacturer and manufacturer of masonry units being cleaned.

2.11 MORTAR AND GROUT MIXES

A. General: Do not use admixtures, including pigments, air-entraining agents, accelerators, retarders, water-repellent agents, antifreeze compounds, or other admixtures, unless otherwise indicated.

1. Do not use calcium chloride in mortar or grout.
2. Use portland cement-lime or masonry cement mortar unless otherwise indicated.
3. For exterior masonry, use portland cement-lime or masonry cement mortar.
4. For reinforced masonry, use [portland cement-lime or masonry cement mortar.
5. Add cold-weather admixture (if used) at same rate for all mortar that will be exposed to view, regardless of weather conditions, to ensure that mortar color is consistent.

B. Preblended, Dry Mortar Mix: Furnish dry mortar ingredients in form of a preblended mix. Measure quantities by weight to ensure accurate proportions, and thoroughly blend ingredients before delivering to Project site.

C. Mortar for Unit Masonry: Comply with ASTM C 270, Proportion Specification. Provide the following types of mortar for applications stated unless another type is indicated.

1. For masonry below grade or in contact with earth, use Type M.

NOT FOR BIDDING PURPOSES

2. For reinforced masonry, use Type S.
3. For exterior, above-grade, load-bearing and non-load-bearing walls and parapet walls; for interior load-bearing walls; for interior non-load-bearing partitions; and for other applications where another type is not indicated, use Type N.
4. For interior non-load-bearing partitions, Type O may be used instead of Type N.

D. Grout for Unit Masonry: Comply with ASTM C 476.

1. Use grout of type indicated or, if not otherwise indicated, of type (fine or coarse) that will comply with Table 1.15.1 in ACI 530.1/ASCE 6/TMS 602 for dimensions of grout spaces and pour height.
2. Proportion grout in accordance with ASTM C 476, Table 1 or paragraph 4.2.2 for specified 28-day compressive strength indicated, but not less than 2000 psi (14 MPa).
3. Provide grout with a slump of 8 to 11 inches (203 to 279 mm) as measured according to ASTM C 143/C 143M.

PART 3 - EXECUTION

3.1 INSTALLATION, GENERAL

A. Use full-size units without cutting if possible. If cutting is required to provide a continuous pattern or to fit adjoining construction, cut units with motor-driven saws; provide clean, sharp, unchipped edges. Allow units to dry before laying unless wetting of units is specified. Install cut units with cut surfaces and, where possible, cut edges concealed.

B. Select and arrange units for exposed unit masonry to produce a uniform blend of colors and textures.

C. Wetting of Brick: Wet brick before laying if initial rate of absorption exceeds 30 g/30 sq. in. (30 g/194 sq. cm) per minute when tested per ASTM C 67. Allow units to absorb water so they are damp but not wet at time of laying.

3.2 TOLERANCES

A. Dimensions and Locations of Elements:

1. For dimensions in cross section or elevation do not vary by more than plus 1/2 inch (12 mm) or minus 1/4 inch (6 mm).
2. For location of elements in plan do not vary from that indicated by more than plus or minus 1/2 inch (12 mm).
3. For location of elements in elevation do not vary from that indicated by more than plus or minus 1/4 inch (6 mm) in a story height or 1/2 inch (12 mm) total.

B. Lines and Levels:

1. For bed joints and top surfaces of bearing walls do not vary from level by more than 1/4 inch in 10 feet (6 mm in 3 m), or 1/2 inch (12 mm) maximum.

NOT FOR BIDDING PURPOSES

2. For conspicuous horizontal lines, such as lintels, sills, parapets, and reveals, do not vary from level by more than 1/8 inch in 10 feet (3 mm in 3 m), 1/4 inch in 20 feet (6 mm in 6 m), or 1/2 inch (12 mm) maximum.
3. For vertical lines and surfaces do not vary from plumb by more than 1/4 inch in 10 feet (6 mm in 3 m), 3/8 inch in 20 feet (9 mm in 6 m), or 1/2 inch (12 mm) maximum.
4. For conspicuous vertical lines, such as external corners, door jambs, reveals, and expansion and control joints, do not vary from plumb by more than 1/8 inch in 10 feet (3 mm in 3 m), 1/4 inch in 20 feet (6 mm in 6 m), or 1/2 inch (12 mm) maximum.
5. For lines and surfaces do not vary from straight by more than 1/4 inch in 10 feet (6 mm in 3 m), 3/8 inch in 20 feet (9 mm in 6 m), or 1/2 inch (12 mm) maximum.

C. Joints:

1. For bed joints, do not vary from thickness indicated by more than plus or minus 1/8 inch (3 mm), with a maximum thickness limited to 1/2 inch (12 mm).
2. For head and collar joints, do not vary from thickness indicated by more than plus 3/8 inch (9 mm) or minus 1/4 inch (6 mm).
3. For exposed head joints, do not vary from thickness indicated by more than plus or minus 1/8 inch (3 mm).

3.3 LAYING MASONRY WALLS

A. Lay out walls in advance for accurate spacing of surface bond patterns with uniform joint thicknesses and for accurate location of openings, movement-type joints, returns, and offsets. Avoid using less-than-half-size units, particularly at corners, jambs, and, where possible, at other locations.

B. Bond Pattern for Exposed Masonry: Unless otherwise indicated, lay exposed masonry in running bond; do not use units with less than nominal 4-inch (100-mm) horizontal face dimensions at corners or jambs.

C. Built-in Work: As construction progresses, build in items specified in this and other Sections. Fill in solidly with masonry around built-in items.

D. Fill space between steel frames and masonry solidly with mortar unless otherwise indicated.

E. Fill cores in hollow CMUs with grout 24 inches (600 mm) under bearing plates, beams, lintels, posts, and similar items unless otherwise indicated.

3.4 MORTAR BEDDING AND JOINTING

A. Lay hollow CMUs as follows:

1. With face shells fully bedded in mortar and with head joints of depth equal to bed joints.
2. With webs fully bedded in mortar in all courses of piers, columns, and pilasters.
3. With webs fully bedded in mortar in grouted masonry, including starting course on footings.
4. With entire units, including areas under cells, fully bedded in mortar at starting course on footings where cells are not grouted.

NOT FOR BIDDING PURPOSES

B. Lay solid masonry units with completely filled bed and head joints; butter ends with sufficient mortar to fill head joints and shove into place. Do not deeply furrow bed joints or slush head joints.

C. Lay structural-clay tile as follows:

1. Lay vertical-cell units with full head joints unless otherwise indicated. Provide bed joints with full mortar coverage on face shells and webs.
2. Lay horizontal-cell units with full bed joints unless otherwise indicated. Keep drainage channels, if any, free of mortar. Form head joints with sufficient mortar so excess will be squeezed out as units are placed in position. Butter both sides of units to be placed, or butter one side of unit already in place and one side of unit to be placed.
3. Maintain joint thicknesses indicated except for minor variations required to maintain bond alignment. If not indicated, lay walls with 1/4- to 3/8-inch- (6- to 10-mm-) thick joints.
4. Where epoxy-mortar pointed joints are indicated, rake out setting mortar to a uniform depth of 1/4 inch (6 mm) and point with epoxy mortar to comply with epoxy-mortar manufacturer's written instructions.

D. Tool exposed joints slightly concave when thumbprint hard, using a jointer larger than joint thickness unless otherwise indicated.

E. Cut joints flush for masonry walls to receive plaster or other direct-applied finishes (other than paint) unless otherwise indicated.

3.5 CAVITY WALLS

A. Bond wythes of cavity walls together using system indicated on drawings.

B. Keep cavities clean of mortar droppings and other materials during construction. Bevel beds away from cavity, to minimize mortar protrusions into cavity. Do not attempt to trowel or remove mortar fins protruding into cavity.

3.6 MASONRY JOINT REINFORCEMENT

A. General: Install entire length of longitudinal side rods in mortar with a minimum cover of 5/8 inch (16 mm) on exterior side of walls, 1/2 inch (13 mm) elsewhere. Lap reinforcement a minimum of 6 inches (150 mm).

1. Space reinforcement not more than 16 inches (406 mm) o.c.
2. Space reinforcement not more than 8 inches (203 mm) o.c. in foundation walls and parapet walls.
3. Provide reinforcement not more than 8 inches (203 mm) above and below wall openings and extending 12 inches (305 mm) beyond openings [in addition to continuous reinforcement].

B. Interrupt joint reinforcement at control and expansion joints unless otherwise indicated.

C. Provide continuity at wall intersections by using prefabricated T-shaped units.

NOT FOR BIDDING PURPOSES

D. Provide continuity at corners by using prefabricated L-shaped units.

3.7 ANCHORING MASONRY VENEERS

A. Anchor masonry veneers to wall framing and concrete and masonry backup with masonry-veneer anchors to comply with the following requirements:

1. Fasten screw-attached anchors through sheathing to wall framing and to concrete and masonry backup with metal fasteners of type indicated. Use two fasteners unless anchor design only uses one fastener.
2. Embed tie sections in masonry joints. Provide not less than 2 inches (50 mm) of air space between back of masonry veneer and face of sheathing.
3. Locate anchor sections to allow maximum vertical differential movement of ties up and down.
4. Space anchors as indicated, but not more than 16 inches (406 mm) o.c. vertically and 32 inches (813 mm) o.c. horizontally with not less than 1 anchor for each 3.5 sq. ft. (0.33 sq. m of wall area. Install additional anchors within 12 inches (305 mm) of openings and at intervals, not exceeding 36 inches (914 mm), around perimeter.

3.8 FLASHING, WEEP HOLES, CAVITY DRAINAGE, AND VENTS

A. General: Install embedded flashing and weep holes in masonry at shelf angles, lintels, ledges, other obstructions to downward flow of water in wall, and where indicated. Install vents at shelf angles, ledges, and other obstructions to upward flow of air in cavities, and where indicated.

B. Install flashing as follows unless otherwise indicated:

1. Prepare masonry surfaces so they are smooth and free from projections that could puncture flashing. Where flashing is within mortar joint, place through-wall flashing on sloping bed of mortar and cover with mortar. Before covering with mortar, seal penetrations in flashing with adhesive, sealant, or tape as recommended by flashing manufacturer.
2. At lintels and shelf angles, extend flashing a minimum of 6 inches (150 mm) into masonry at each end. At heads and sills, extend flashing 6 inches (150 mm) at ends and turn up not less than 2 inches (50 mm) to form end dams.
3. Install metal drip edges beneath flexible flashing at exterior face of wall. Stop flexible flashing 1/2 inch (13 mm) back from outside face of wall and adhere flexible flashing to top of metal drip edge.
4. Install metal flashing termination beneath flexible flashing at exterior face of wall. Stop flexible flashing 1/2 inch (13 mm) back from outside face of wall and adhere flexible flashing to top of metal flashing termination.

C. Install weep holes in head joints in exterior wythes of first course of masonry immediately above embedded flashing and as follows:

1. Use specified weep/vent products to form weep holes.
2. Space weep holes 24 inches (600 mm) o.c. unless otherwise indicated.

NOT FOR BIDDING PURPOSES

3. Cover cavity side of weep holes with plastic insect screening at cavities insulated with loose-fill insulation.

D. Place cavity drainage material in cavities to comply with configuration requirements for cavity drainage material in "Miscellaneous Masonry Accessories" Article.

E. Install vents in head joints in exterior wythes at spacing indicated. Use specified weep/vent products to form vents.

1. Close cavities off vertically and horizontally with blocking in manner indicated. Install through-wall flashing and weep holes above horizontal blocking.

3.9 REINFORCED UNIT MASONRY INSTALLATION

A. Temporary Formwork and Shores: Construct formwork and shores as needed to support reinforced masonry elements during construction.

1. Construct formwork to provide shape, line, and dimensions of completed masonry as indicated. Make forms sufficiently tight to prevent leakage of mortar and grout. Brace, tie, and support forms to maintain position and shape during construction and curing of reinforced masonry.
2. Do not remove forms and shores until reinforced masonry members have hardened sufficiently to carry their own weight and other loads that may be placed on them during construction.

B. Placing Reinforcement: Comply with requirements in ACI 530.1/ASCE 6/TMS 602.

C. Grouting: Do not place grout until entire height of masonry to be grouted has attained enough strength to resist grout pressure.

1. Comply with requirements in ACI 530.1/ASCE 6/TMS 602 for cleanouts and for grout placement, including minimum grout space and maximum pour height.
2. Limit height of vertical grout pours to not more than 60 inches (1520 mm).

3.10 FIELD QUALITY CONTROL

A. Testing and Inspecting: Owner will engage special inspectors to perform tests and inspections and prepare reports. Allow inspectors access to scaffolding and work areas, as needed to perform tests and inspections. Retesting of materials that fail to comply with specified requirements shall be done at Contractor's expense.

B. Inspections: Level 1 special inspections according to the "International Building Code."

C. Testing Frequency: One set of tests for each 5000 sq. ft. (464 sq. m) of wall area or portion thereof.

D. Clay Masonry Unit Test: For each type of unit provided, according to ASTM C 67 for compressive strength.

NOT FOR BIDDING PURPOSES

E. Concrete Masonry Unit Test: For each type of unit provided, according to ASTM C 140 for compressive strength.

F. Mortar Test (Property Specification): For each mix provided, according to ASTM C 780. Test mortar for mortar air content and compressive strength.

G. Grout Test (Compressive Strength): For each mix provided, according to ASTM C 1019.

3.11 REPAIRING, POINTING, AND CLEANING

A. In-Progress Cleaning: Clean unit masonry as work progresses by dry brushing to remove mortar fins and smears before tooling joints.

B. Final Cleaning: After mortar is thoroughly set and cured, clean exposed masonry as follows:

1. Test cleaning methods on sample wall panel; leave one-half of panel uncleaned for comparison purposes.
2. Protect surfaces from contact with cleaner.
3. Wet wall surfaces with water before applying cleaners; remove cleaners promptly by rinsing surfaces thoroughly with clear water.
4. Clean brick by bucket-and-brush hand-cleaning method described in BIA Technical Notes 20.
5. Clean masonry with a proprietary acidic cleaner applied according to manufacturer's written instructions.
6. Clean concrete masonry by cleaning method indicated in NCMA TEK 8-2A applicable to type of stain on exposed surfaces.

3.12 MASONRY WASTE DISPOSAL

A. Excess Masonry Waste: Remove excess clean masonry waste that cannot be used as fill, as described above, and other masonry waste, and legally dispose of off Owner's property.

END OF SECTION 04 20 00

NOT FOR BIDDING PURPOSES

SECTION 04 72 00

CAST STONE MASONRY

NOT FOR BIDDING PURPOSES

PART 1 - GENERAL

1.1 SUMMARY

A. Section Includes:

1. Cast stone trim.

   a. Surrounds.
   b. Coping.
   c. Wall caps.

1.2 SUBMITTALS

A. Product Data: For each type of product indicated. Include dimensions and finishes.

B. Shop Drawings: Show fabrication and installation details for cast stone units. Include dimensions, details of reinforcement and anchorages if any, and indication of finished faces.

C. Samples:

1. For each color and texture of cast stone required.
2. For colored mortar.

D. Qualification Data: For manufacturer.

E. Material Test Reports: For each mix required to produce cast stone, based on testing according to ASTM C 1364.

1.3 QUALITY ASSURANCE

A. Manufacturer Qualifications: A qualified manufacturer of cast stone units similar to those indicated for this Project, that has sufficient production capacity to manufacture required units, and is a plant certified by the Cast Stone Institute or the Architectural Precast Association.

B. Mock-Up: Provide full size cast stone components for installation in mock-up of exterior wall.

1. Approved mock-up will become standard for appearance and workmanship.
2. Mock-up may remain as part of the completed work.
3. Remove mock-up not incorporated into the work and dispose of debris.

PART 2 - PRODUCTS

2.1 CAST STONE UNITS

A. Provide cast stone units complying with ASTM C 1364 using either the vibrant dry tamp or wet-cast method.

1. Provide units that are resistant to freezing and thawing as determined by laboratory testing according to ASTM C 666/C 666M, Procedure A, as modified by ASTM C 1364.
2. Slope exposed horizontal surfaces 1:12 to drain unless otherwise indicated.
3. Provide raised fillets at backs of sills and at ends indicated to be built into jambs.
4. Provide drips on projecting elements unless otherwise indicated.

B. Cure units as follows:

1. Cure units in enclosed moist curing room at 95 to 100 percent relative humidity and temperature of 100 deg F (38 deg C) for 12 hours or 70 deg F (21 deg C) for 16 hours.
2. Keep units damp and continue curing to comply with one of the following:

a. No fewer than five days at mean daily temperature of 70 deg F (21 deg C) or above.
b. No fewer than six days at mean daily temperature of 60 deg F (16 deg C) or above.
c. No fewer than seven days at mean daily temperature of 50 deg F (10 deg C) or above.
d. No fewer than eight days at mean daily temperature of 45 deg F (7 deg C) or above.

C. Acid etch units after curing to remove cement film from surfaces to be exposed to view.

D. Colors and Textures: As selected by Architect from manufacturer's full range.

2.2 ACCESSORIES

A. Anchors: Type and size indicated, fabricated from Type 304 stainless steel complying with ASTM A 240/A 240M, ASTM A 276, or ASTM A 666.

B. Dowels: 1/2-inch- (12-mm-) diameter, round bars, fabricated from Type 304 stainless steel complying with ASTM A 240/A 240M, ASTM A 276, or ASTM A 666.

C. Proprietary Acidic Cleaner: Manufacturer's standard-strength cleaner complying with requirements in Division 04 Section "Unit Masonry", and expressly approved for intended use by cast stone manufacturer and cleaner manufacturer.

2.3 MORTAR

A. Comply with requirements in Division 04 Section "Unit Masonry" for mortar materials and mixes.

1. For setting mortar, use Type N.

NOT FOR BIDDING PURPOSES

2.4 SOURCE QUALITY CONTROL

A. Engage a qualified independent testing agency to sample and test cast stone units according to ASTM C 1364.

1. Include one test for resistance to freezing and thawing.

PART 3 - EXECUTION

3.1 SETTING CAST STONE IN MORTAR

A. Set units in full bed of mortar with full head joints unless otherwise indicated.

1. Fill dowel holes and anchor slots with mortar.
2. Fill collar joints solid as units are set.
3. Build concealed flashing into mortar joints as units are set.
4. Keep head joints in coping and other units with exposed horizontal surfaces open to receive sealant.
5. Keep joints at shelf angles open to receive sealant.

B. Tool exposed joints slightly concave when thumbprint hard, using a jointer larger than joint thickness unless otherwise indicated.

C. Provide sealant joints at copings and other horizontal surfaces, at expansion, control, and pressure-relieving joints, and at locations indicated.

1. Keep joints free of mortar and other rigid materials.
2. Prepare and apply sealant of type and at locations indicated to comply with applicable requirements in Division 07 Section "Joint Sealants."

3.2 SETTING ANCHORED CAST STONE WITH SEALANT-FILLED JOINTS

A. Set units accurately in locations indicated with edges and faces aligned.

1. Install anchors, supports, fasteners, and other attachments to secure units in place.
2. Shim and adjust anchors, supports, and accessories.

B. Fill anchor holes with sealant.

1. Where dowel holes occur at pressure-relieving joints, provide compressible material at ends of dowels.

C. Set cast stone supported on clip or continuous angles on resilient setting shims. Hold shims back from face of cast stone a distance at least equal to width of joint.

D. Keep joints free of mortar and other rigid materials. Remove temporary shims and spacers from joints after anchors and supports are secured in place and cast stone units are anchored.

NOT FOR BIDDING PURPOSES

E. Prepare and apply sealant of type and at locations indicated to comply with applicable requirements in Division 07 Section "Joint Sealants."

3.3 INSTALLATION TOLERANCES

A. Variation from Plumb: Do not exceed 1/8 inch in 10 feet (3 mm in 3 m), 1/4 inch in 20 feet (6 mm in 6 m), or 1/2 inch (12 mm) maximum.

B. Variation from Level: Do not exceed 1/8 inch in 10 feet (3 mm in 3 m), 1/4 inch in 20 feet (6 mm in 6 m), or 1/2 inch (12 mm) maximum.

C. Variation in Joint Width: Do not vary joint thickness more than 1/8 inch in 36 inches (3 mm in 900 mm) or one-fourth of nominal joint width, whichever is less.

D. Variation in Plane between Adjacent Surfaces (Lipping): Do not vary from flush alignment with adjacent units or adjacent surfaces indicated to be flush with units by more than 1/16 inch (1.5 mm), except where variation is due to warpage of units within tolerances specified.

3.4 ADJUSTING AND CLEANING

A. Remove and replace stained and otherwise damaged units and units not matching approved Samples. Cast stone may be repaired if methods and results are approved by Architect.

B. Replace units in a manner that results in cast stone matching approved Samples, complying with other requirements, and showing no evidence of replacement.

C. In-Progress Cleaning: Clean cast stone as work progresses.

1. Remove mortar fins and smears before tooling joints.
2. Remove excess sealant immediately, including spills, smears, and spatter.

D. Final Cleaning: After mortar is thoroughly set and cured, clean exposed cast stone to comply with requirements in Division 04 Section "Unit Masonry."

END OF SECTION 04 72 00

NOT FOR BIDDING PURPOSES

NOT FOR BIDDING PURPOSES

SECTION 05 12 00

STRUCTURAL STEEL FRAMING

PART 1 - GENERAL

1.1 RELATED DOCUMENTS

A. Drawings and general provisions of the Contract, including General and Supplementary Conditions and Division 01 Specification Sections, apply to this Section.

1.2 SUMMARY

A. Section Includes:

1. Structural steel.
2. Grout.

B. Related Sections:

1. Division 01 Section "Quality Requirements" for independent testing agency procedures and administrative requirements.
2. Division 05 Section "Steel Decking" for field installation of shear connectors through deck.

1.3 DEFINITIONS

A. Structural Steel: Elements of structural-steel frame, as classified by AISC 303, "Code of Standard Practice for Steel Buildings and Bridges."

1.4 PERFORMANCE REQUIREMENTS

A. Connections: Provide details of simple shear connections required by the Contract Documents to be selected or completed by structural-steel fabricator, to withstand loads indicated and comply with other information and restrictions indicated.

1. Select and complete connections using schematic details indicated and AISC 360.
2. Use ASD; data are given at service-load level.

1.5 SUBMITTALS

A. Product Data: For each type of product indicated.

B. Shop Drawings: Show fabrication of structural-steel components.

1. Include details of cuts, connections, splices, camber, holes, and other pertinent data.
2. Include embedment drawings.
3. Indicate welds by standard AWS symbols, distinguishing between shop and field welds, and show size, length, and type of each weld. Show backing bars that are to be removed and supplemental fillet welds where backing bars are to remain.
4. Indicate type, size, and length of bolts, distinguishing between shop and field bolts. Identify pretensioned and slip-critical high-strength bolted connections.
5. Identify demand critical welds.
6. Submit each erection sequence with all pieces in a single submission.

C. Welding certificates.

D. Paint Compatibility Certificates: From manufacturers of topcoats applied over shop primers, certifying that shop primers are compatible with topcoats.

E. Product Test Reports: For the following:

1. Bolts, nuts, and washers including mechanical properties and chemical analysis.
2. Direct-tension indicators.
3. Tension-control, high-strength bolt-nut-washer assemblies.
4. Shop primers.
5. Nonshrink grout.

F. Source quality-control reports.

1.6 QUALITY ASSURANCE

A. Welding Qualifications: Qualify procedures and personnel according to AWS D1.1/D1.1M, "Structural Welding Code - Steel."

1. Welders and welding operators performing work on bottom-flange, demand-critical welds shall pass the supplemental welder qualification testing, as required by AWS D1.8. FCAW-S and FCAW-G shall be considered separate processes for welding personnel qualification.

B. Comply with applicable provisions of the following specifications and documents:

1. AISC 303.
2. AISC 341 and AISC 341s1.
3. AISC 360.
4. RCSC's "Specification for Structural Joints Using ASTM A 325 or A 490 Bolts."

1.7 DELIVERY, STORAGE, AND HANDLING

A. Store materials to permit easy access for inspection and identification. Keep steel members off ground and spaced by using pallets, dunnage, or other supports and spacers. Protect steel members and packaged materials from corrosion and deterioration.

NOT FOR BIDDING PURPOSES

1. Do not store materials on structure in a manner that might cause distortion, damage, or overload to members or supporting structures. Repair or replace damaged materials or structures as directed.

B. Store fasteners in a protected place in sealed containers with manufacturer's labels intact.

1. Fasteners may be repackaged provided Owner's testing and inspecting agency observes repackaging and seals containers.
2. Clean and relubricate bolts and nuts that become dry or rusty before use.
3. Comply with manufacturers' written recommendations for cleaning and lubricating ASTM F 1852 fasteners and for retesting fasteners after lubrication.

1.8 COORDINATION

A. Coordinate selection of shop primers with topcoats to be applied over them. Comply with paint and coating manufacturers' recommendations to ensure that shop primers and topcoats are compatible with one another.

B. Coordinate installation of anchorage items to be embedded in or attached to other construction without delaying the Work. Provide setting diagrams, sheet metal templates, instructions, and directions for installation.

PART 2 - PRODUCTS

2.1 STRUCTURAL-STEEL MATERIALS

A. W-Shapes: ASTM A 992/A 992M.

B. Channels, Angles: ASTM A 36/A 36M.

C. Plate and Bar: ASTM A 572/A 572M, Grade 50.

D. Cold-Formed Hollow Structural Sections: ASTM A 500, Grade B, structural tubing.

E. Steel Pipe: ASTM A 53/A 53M, Type E or S, Grade B.

1. Weight Class: Standard.
2. Finish: Black.

F. Welding Electrodes: Comply with AWS requirements.

2.2 BOLTS, CONNECTORS, AND ANCHORS

A. High-Strength Bolts, Nuts, and Washers: ASTM A 325, Type 1, heavy-hex steel structural bolts; ASTM A 563, Grade C, heavy-hex carbon-steel nuts; and ASTM F 436, Type 1, hardened carbon-steel washers; all with plain finish.

NOT FOR BIDDING PURPOSES

1. Direct-Tension Indicators: ASTM F 959, Type 325, compressible-washer type with plain finish.

B. Zinc-Coated High-Strength Bolts, Nuts, and Washers: ASTM A 325, Type 1, heavy-hex steel structural bolts; ASTM A 563, Grade DH heavy-hex carbon-steel nuts; and ASTM F 436, Type 1, hardened carbon-steel washers.

1. Finish: Hot-dip or mechanically deposited zinc coating.
2. Direct-Tension Indicators: ASTM F 959, Type 325, compressible-washer type with mechanically deposited zinc coating finish.

C. Tension-Control, High-Strength Bolt-Nut-Washer Assemblies: ASTM F 1852, Type 1, round head assemblies consisting of steel structural bolts with splined ends, heavy-hex carbon-steel nuts, and hardened carbon-steel washers.

1. Finish: Plain.

D. Unheaded Anchor Rods: ASTM A 36/A 36M].

1. Configuration: Hooked.
2. Nuts: ASTM A 563 heavy-hex carbon steel.
3. Plate Washers: ASTM A 36/A 36M carbon steel.
4. Washers: ASTM F 436, Type 1, hardened carbon steel.
5. Finish: Plain.

E. Threaded Rods: ASTM A 36/A 36M.

1. Nuts: ASTM A 563 hex carbon steel.
2. Washers: ASTM A 36/A 36M carbon steel.
3. Finish: Plain.

2.3 PRIMER

A. Primer: Fabricator's standard lead- and chromate-free, nonasphaltic, rust-inhibiting primer complying with MPI#79 and compatible with topcoat.

B. Galvanizing Repair Paint: ASTM A 780.

2.4 GROUT

A. Metallic, Shrinkage-Resistant Grout: ASTM C 1107, factory-packaged, metallic aggregate grout, mixed with water to consistency suitable for application and a 30-minute working time.

B. Nonmetallic, Shrinkage-Resistant Grout: ASTM C 1107, factory-packaged, nonmetallic aggregate grout, noncorrosive and nonstaining, mixed with water to consistency suitable for application and a 30-minute working time.

NOT FOR BIDDING PURPOSES

NOT FOR BIDDING PURPOSES

2.5 FABRICATION

A. Structural Steel: Fabricate and assemble in shop to greatest extent possible. Fabricate according to AISC's "Code of Standard Practice for Steel Buildings and Bridges" and AISC 360.

1. Camber structural-steel members where indicated.
2. Fabricate beams with rolling camber up.
3. Identify high-strength structural steel according to ASTM A 6/A 6M and maintain markings until structural steel has been erected.
4. Mark and match-mark materials for field assembly.
5. Complete structural-steel assemblies, including welding of units, before starting shop-priming operations.

B. Thermal Cutting: Perform thermal cutting by machine to greatest extent possible.

1. Plane thermally cut edges to be welded to comply with requirements in AWS D1.1/D1.1M.

2. Bolt Holes: Cut, drill, or punch standard bolt holes perpendicular to metal surfaces. Do not thermally cut bolt holes or enlarge holes by burning.

C. Finishing: Accurately finish ends of columns and other members transmitting bearing loads.

D. Cleaning: Clean and prepare steel surfaces that are to remain unpainted according to SSPC-SP 3, "Power Tool Cleaning."

E. Holes: Provide holes required for securing other work to structural steel and for other work to pass through steel framing members.

1. Cut, drill, or punch holes perpendicular to steel surfaces. Do not thermally cut bolt holes or enlarge holes by burning.
2. Baseplate Holes: Cut, drill, mechanically thermal cut, or punch holes perpendicular to steel surfaces.
3. Weld threaded nuts to framing and other specialty items indicated to receive other work.

2.6 SHOP CONNECTIONS

A. High-Strength Bolts: Shop install high-strength bolts according to RCSC's "Specification for Structural Joints Using ASTM A 325 or A 490 Bolts" for type of bolt and type of joint specified.

1. Joint Type: Snug tightened.

B. Weld Connections: Comply with AWS D1.1/D1.1M and AWS D1.8/D1.8M for tolerances, appearances, welding procedure specifications, weld quality, and methods used in correcting welding work.

1. Assemble and weld built-up sections by methods that will maintain true alignment of axes without exceeding tolerances in AISC 303 for mill material.

2.7 SHOP PRIMING

A. Shop prime steel surfaces except the following:

1. Surfaces embedded in concrete or mortar. Extend priming of partially embedded members to a depth of 2 inches.
2. Surfaces to be field welded.
3. Surfaces to be high-strength bolted with slip-critical connections.
4. Surfaces to receive sprayed fire-resistive materials (applied fireproofing).
5. Galvanized surfaces.

B. Surface Preparation: Clean surfaces to be painted. Remove loose rust and mill scale and spatter, slag, or flux deposits. Prepare surfaces according to the following specifications and standards:

1. SSPC-SP 3, "Power Tool Cleaning."

C. Priming: Immediately after surface preparation, apply primer according to manufacturer's written instructions and at rate recommended by SSPC to provide a minimum dry film thickness of 1.5 mils. Use priming methods that result in full coverage of joints, corners, edges, and exposed surfaces.

1. Stripe paint corners, crevices, bolts, welds, and sharp edges.
2. Apply two coats of shop paint to surfaces that are inaccessible after assembly or erection. Change color of second coat to distinguish it from first.

2.8 GALVANIZING

A. Hot-Dip Galvanized Finish: Apply zinc coating by the hot-dip process to structural steel according to ASTM A 123/A 123M.

1. Fill vent and drain holes that will be exposed in the finished Work unless they will function as weep holes, by plugging with zinc solder and filing off smooth.
2. Galvanize exterior dunnage for roof top equipment.
3. Galvanize lintels and shelf angles attached to structural-steel frame and located in exterior walls.

2.9 SOURCE QUALITY CONTROL

A. Testing Agency: Owner will engage an independent testing and inspecting agency to perform shop tests and inspections and prepare test reports.

1. Provide testing agency with access to places where structural-steel work is being fabricated or produced to perform tests and inspections.

B. Correct deficiencies in Work that test reports and inspections indicate does not comply with the Contract Documents.

C. Bolted Connections: Shop-bolted connections will be tested and inspected according to RCSC's "Specification for Structural Joints Using ASTM A 325 or A 490 Bolts."

NOT FOR BIDDING PURPOSES

D. Welded Connections: In addition to visual inspection, shop-welded connections will be tested and inspected according to AWS D1.1/D1.1M and the following inspection procedures, at testing agency's option:

1. Liquid Penetrant Inspection: ASTM E 165.
2. Magnetic Particle Inspection: ASTM E 709; performed on root pass and on finished weld. Cracks or zones of incomplete fusion or penetration will not be accepted.
3. Ultrasonic Inspection: ASTM E 164.
4. Radiographic Inspection: ASTM E 94.

PART 3 - EXECUTION

3.1 EXAMINATION

A. Verify, with steel Erector present, elevations of concrete- and masonry-bearing surfaces and locations of anchor rods, bearing plates, and other embedments for compliance with requirements.

1. Prepare a certified survey of bearing surfaces, anchor rods, bearing plates, and other embedments showing dimensions, locations, angles, and elevations.

B. Proceed with installation only after unsatisfactory conditions have been corrected.

3.2 PREPARATION

A. Provide temporary shores, guys, braces, and other supports during erection to keep structural steel secure, plumb, and in alignment against temporary construction loads and loads equal in intensity to design loads. Remove temporary supports when permanent structural steel, connections, and bracing are in place unless otherwise indicated.

1. Do not remove temporary shoring supporting composite deck construction until cast-in-place concrete has attained its design compressive strength.

3.3 ERECTION

A. Set structural steel accurately in locations and to elevations indicated and according to AISC 303 and AISC 360.

B. Base Bearing and Leveling Plates: Clean concrete- and masonry-bearing surfaces of bond-reducing materials, and roughen surfaces prior to setting plates. Clean bottom surface of plates.

1. Set plates for structural members on wedges, shims, or setting nuts as required.
2. Weld plate washers to top of baseplate.
3. Snug-tighten anchor rods after supported members have been positioned and plumbed. Do not remove wedges or shims but, if protruding, cut off flush with edge of plate before packing with grout.

NOT FOR BIDDING PURPOSES

4. Promptly pack grout solidly between bearing surfaces and plates so no voids remain. Neatly finish exposed surfaces; protect grout and allow to cure. Comply with manufacturer's written installation instructions for shrinkage-resistant grouts.

C. Maintain erection tolerances of structural steel within AISC's "Code of Standard Practice for Steel Buildings and Bridges."

D. Align and adjust various members that form part of complete frame or structure before permanently fastening. Before assembly, clean bearing surfaces and other surfaces that will be in permanent contact with members. Perform necessary adjustments to compensate for discrepancies in elevations and alignment.

1. Level and plumb individual members of structure.
2. Make allowances for difference between temperature at time of erection and mean temperature when structure is completed and in service.

E. Splice members only where indicated.

F. Do not use thermal cutting during erection unless approved by Architect. Finish thermally cut sections within smoothness limits in AWS D1.1/D1.1M].

G. Do not enlarge unfair holes in members by burning or using drift pins. Ream holes that must be enlarged to admit bolts.

3.4 FIELD CONNECTIONS

A. High-Strength Bolts: Install high-strength bolts according to RCSC's "Specification for Structural Joints Using ASTM A 325 or A 490 Bolts" for type of bolt and type of joint specified.

1. Joint Type: Snug tightened.

B. Weld Connections: Comply with AWS D1.1/D1.1M and AWS D1.8/D1.8M for tolerances, appearances, welding procedure specifications, weld quality, and methods used in correcting welding work.

1. Comply with AISC 303 and AISC 360 for bearing, alignment, adequacy of temporary connections, and removal of paint on surfaces adjacent to field welds.
2. Remove backing bars or runoff tabs where indicated, back gouge, and grind steel smooth.
3. Assemble and weld built-up sections by methods that will maintain true alignment of axes without exceeding tolerances in AISC's "Code of Standard Practice for Steel Buildings and Bridges" for mill material.

3.5 FIELD QUALITY CONTROL

A. Testing Agency: Owner will engage a qualified independent testing and inspecting agency to inspect field welds and high-strength bolted connections.

B. Bolted Connections: Bolted connections will be tested and inspected according to RCSC's "Specification for Structural Joints Using ASTM A 325 or A 490 Bolts."

NOT FOR BIDDING PURPOSES

C. Welded Connections: Field welds will be visually inspected according to AWS D1.1/D1.1M.

1. In addition to visual inspection, field welds will be tested and inspected according to AWS D1.1/D1.1M and the following inspection procedures, at testing agency's option:

   a. Liquid Penetrant Inspection: ASTM E 165.
   b. Magnetic Particle Inspection: ASTM E 709; performed on root pass and on finished weld. Cracks or zones of incomplete fusion or penetration will not be accepted.
   c. Ultrasonic Inspection: ASTM E 164.
   d. Radiographic Inspection: ASTM E 94.

D. In addition to visual inspection, test and inspect field-welded shear connectors according to requirements in AWS D1.1/D1.1M for stud welding and as follows:

1. Perform bend tests if visual inspections reveal either a less-than-continuous 360-degree flash or welding repairs to any shear connector.
2. Conduct tests on additional shear connectors if weld fracture occurs on shear connectors already tested, according to requirements in AWS D1.1/D1.1M.

E. Correct deficiencies in Work that test reports and inspections indicate does not comply with the Contract Documents.

3.6 REPAIRS AND PROTECTION

A. Galvanized Surfaces: Clean areas where galvanizing is damaged or missing and repair galvanizing to comply with ASTM A 780.

B. Touchup Painting: Immediately after erection, clean exposed areas where primer is damaged or missing and paint with the same material as used for shop painting to comply with SSPC-PA 1 for touching up shop-painted surfaces.

1. Clean and prepare surfaces by SSPC-SP 2 hand-tool cleaning or SSPC-SP 3 power-tool cleaning.

C. Touchup Painting: Cleaning and touchup painting are specified in Division 09 painting Sections.

END OF SECTION 05 12 00

NOT FOR BIDDING PURPOSES

THIS PAGE INTENTIONALLY LEFT BLANK

NOT FOR BIDDING PURPOSES

SECTION 05 31 00

STEEL DECKING

PART 1 - GENERAL

1.1 RELATED DOCUMENTS

A. Drawings and general provisions of the Contract, including General and Supplementary Conditions and Division 01 Specification Sections, apply to this Section.

1.2 SUMMARY

A. Section Includes:

1. Roof deck.
2. Noncomposite form deck.

B. Related Requirements:

1. Division 03 Section "Cast-in-Place Concrete" for normal-weight and lightweight structural concrete fill over steel deck.
2. Division 05 Section "Structural Steel Framing" for shop- and field-welded shear connectors.
3. Division 05 Section "Metal Fabrications" for framing deck openings with miscellaneous steel shapes.
4. Division 09 painting Sections for repair painting of primed deck and finish painting of deck.

1.3 ACTION SUBMITTALS

A. Product Data: For each type of deck, accessory, and product indicated.

B. Shop Drawings:

1. Include layout and types of deck panels, anchorage details, reinforcing channels, pans, cut deck openings, special jointing, accessories, and attachments to other construction.

1.4 INFORMATIONAL SUBMITTALS

A. Welding certificates.

B. Product Certificates: For each type of steel deck.

C. Product Test Reports: Based on evaluation of comprehensive tests performed by a qualified testing agency, indicating that each of the following complies with requirements:

NOT FOR BIDDING PURPOSES

1. Power-actuated mechanical fasteners.
2. Acoustical roof deck.

D. Evaluation Reports: For steel deck.

E. Field quality-control reports.

1.5 QUALITY ASSURANCE

A. Testing Agency Qualifications: Qualified according to ASTM E 329 for testing indicated.

B. Welding Qualifications: Qualify procedures and personnel according to AWS D1.3, "Structural Welding Code - Sheet Steel."

C. Electrical Raceway Units: Provide UL-labeled cellular floor-deck units complying with UL 209 and listed in UL's "Electrical Construction Equipment Directory" for use with standard header ducts and outlets for electrical distribution systems.

D. FM Global Listing: Provide steel roof deck evaluated by FM Global and listed in its "Approval Guide, Building Materials" for Class 1 fire rating and Class 1-90 windstorm ratings.

1.6 DELIVERY, STORAGE, AND HANDLING

A. Protect steel deck from corrosion, deformation, and other damage during delivery, storage, and handling.

B. Stack steel deck on platforms or pallets and slope to provide drainage. Protect with a waterproof covering and ventilate to avoid condensation.

1. Protect and ventilate acoustical cellular roof deck with factory-installed insulation to maintain insulation free of moisture.

PART 2 - PRODUCTS

2.1 PERFORMANCE REQUIREMENTS

A. AISI Specifications: Comply with calculated structural characteristics of steel deck according to AISI's "North American Specification for the Design of Cold-Formed Steel Structural Members."

B. Fire-Resistance Ratings: Comply with ASTM E 119; testing by a qualified testing agency. Identify products with appropriate markings of applicable testing agency.

1. Indicate design designations from UL's "Fire Resistance Directory" or from the listings of another qualified testing agency.

C. Recycled Content of Steel Products: Postconsumer recycled content plus one-half of preconsumer recycled content not less than 25 percent.

NOT FOR BIDDING PURPOSES

D. Low-Emitting Materials: Paints and coatings shall comply with the testing and product requirements of the California Department of Health Services' "Standard Practice for the Testing of Volatile Organic Emissions from Various Sources Using Small-Scale Environmental Chambers."

2.2 ROOF DECK

A. Manufacturers: Subject to compliance with requirements, available manufacturers offering products that may be incorporated into the Work include, but are not limited to, the following:

1. ASC Profiles, Inc.; a Blue Scope Steel company.
2. Canam United States; Canam Group Inc.
3. Epic Metals Corporation.
4. New Millennium Building Systems, LLC.
5. Nucor Corp.; Vulcraft Group.
6. Wheeling Corrugating Company; Div. of Wheeling-Pittsburgh Steel Corporation.

B. Roof Deck: Fabricate panels, without top-flange stiffening grooves, to comply with "SDI Specifications and Commentary for Steel Roof Deck," in SDI Publication No. 31, and with the following:

1. Prime-Painted Steel Sheet: ASTM A 1008/A 1008M, Structural Steel (SS), Grade 33 minimum, shop primed with manufacturer's standard baked-on, rust-inhibitive primer. Color: Gray or White

2. Aluminum-Zinc-Alloy-Coated Steel Sheet: ASTM A 792/A 792M, Structural Steel (SS), Grade 33 minimum, AZ50 aluminum-zinc-alloy coating.
3. Deck Profile: As indicated
4. Profile Depth: As indicated
5. Design Uncoated-Steel Thickness: As indicated
6. Design Uncoated-Steel Thicknesses; Deck Unit/Bottom Plate: As indicated
7. Span Condition: As indicated.
8. Side Laps: Overlapped

2.3 NONCOMPOSITE FORM DECK

A. Manufacturers: Subject to compliance with requirements, available manufacturers offering products that may be incorporated into the Work include, but are not limited to, the following:
1. Canam United States; Canam Group Inc.
2. New Millennium Building Systems, LLC.
3. Nucor Corp.; Vulcraft Group.
4. Wheeling Corrugating Company; Div. of Wheeling-Pittsburgh Steel Corporation.

B. Noncomposite Steel Form Deck: Fabricate ribbed-steel sheet noncomposite form-deck panels to comply with "SDI Specifications and Commentary for Noncomposite Steel Form Deck," in SDI Publication No. 30, with the minimum section properties indicated, and with the following:

1. Uncoated Steel Sheet: ASTM A 1008/A 1008M, Structural Steel (SS), Grade 33 (230) minimum.

NOT FOR BIDDING PURPOSES

2. Prime-Painted Steel Sheet: ASTM A 1008/A 1008M, Structural Steel (SS), Grade 33 (230) minimum, with underside surface shop primed with manufacturer's standard baked-on, rust-inhibitive primer.

   a. Color: Manufacturer's standard.

3. Profile Depth: 9/16 inch (14 mm).
4. Design Uncoated-Steel Thickness: See Drawings
5. Span Condition: Triple span or more.

2.4 ACCESSORIES

A. General: Provide manufacturer's standard accessory materials for deck that comply with requirements indicated.

B. Mechanical Fasteners: Corrosion-resistant, low-velocity, power-actuated or pneumatically driven carbon-steel fasteners; or self-drilling, self-threading screws.

C. Side-Lap Fasteners: Corrosion-resistant, hexagonal washer head; self-drilling, carbon-steel screws, No. 10 minimum diameter.

D. Flexible Closure Strips: Vulcanized, closed-cell, synthetic rubber.

E. Miscellaneous Sheet Metal Deck Accessories: Steel sheet, minimum yield strength of 33,000 psi, not less than 0.0359-inch design uncoated thickness, of same material and finish as deck; of profile indicated or required for application.

F. Pour Stops and Girder Fillers: Steel sheet, minimum yield strength of 33,000 psi, of same material and finish as deck, and of thickness and profile indicated.

G. Column Closures, End Closures, Z-Closures, and Cover Plates: Steel sheet, of same material, finish, and thickness as deck unless otherwise indicated.

H. Piercing Hanger Tabs: Piercing steel sheet hanger attachment devices for use with floor deck.

I. Flat Sump Plates: Single-piece steel sheet, 0.0747 inch thick, of same material and finish as deck. For drains, cut holes in the field.

J. Galvanizing Repair Paint: [ASTM A 780] [SSPC-Paint 20 or MIL-P-21035B, with dry film containing a minimum of 94 percent zinc dust by weight].

K. Repair Paint: Manufacturer's standard rust-inhibitive primer of same color as primer.

PART 3 - EXECUTION

3.1 EXAMINATION

A. Examine supporting frame and field conditions for compliance with requirements for installation tolerances and other conditions affecting performance.

NOT FOR BIDDING PURPOSES

B. Proceed with installation only after unsatisfactory conditions have been corrected.

3.2 INSTALLATION, GENERAL

A. Install deck panels and accessories according to applicable specifications and commentary in SDI Publication No. 31, manufacturer's written instructions, and requirements in this Section.

B. Install temporary shoring before placing deck panels if required to meet deflection limitations.

C. Locate deck bundles to prevent overloading of supporting members.

D. Place deck panels on supporting frame and adjust to final position with ends accurately aligned and bearing on supporting frame before being permanently fastened. Do not stretch or contract side-lap interlocks.

1. Align cellular deck panels over full length of cell runs and align cells at ends of abutting panels.

E. Place deck panels flat and square and fasten to supporting frame without warp or deflection.

F. Cut and neatly fit deck panels and accessories around openings and other work projecting through or adjacent to deck.

G. Provide additional reinforcement and closure pieces at openings as required for strength, continuity of deck, and support of other work.

H. Comply with AWS requirements and procedures for manual shielded metal arc welding, appearance and quality of welds, and methods used for correcting welding work.

I. Mechanical fasteners may be used in lieu of welding to fasten deck. Locate mechanical fasteners and install according to deck manufacturer's written instructions.

3.3 ROOF-DECK INSTALLATION

A. Fasten roof-deck panels to steel supporting members by arc spot (puddle) welds of the surface diameter indicated or arc seam welds with an equal perimeter that is not less than 1-1/2 inches long, and as follows:

1. Weld Diameter and Spacing: As indicated on the drawings.
2. Weld Washers: Install weld washers at each weld location.

B. Side-Lap and Perimeter Edge Fastening: Fasten side laps and perimeter edges of panels between supports, at intervals not exceeding the lesser of 1/2 of the span or **18 inches**, and as follows:

1. Mechanically fasten with self-drilling, No. 10 diameter or larger, carbon-steel screws.
2. Mechanically clinch or button punch.
3. Fasten with a minimum of 1-1/2-inch- long welds.

NOT FOR BIDDING PURPOSES

C. End Bearing: Install deck ends over supporting frame with a minimum end bearing of 1-1/2 inches, with end joints as follows:

1. End Joints: Lapped 2 inches (51 mm) minimum.

D. Roof Sump Pans and Sump Plates: Install over openings provided in roof decking and weld flanges to top of deck. Space welds not more than 12 inches (305 mm) apart with at least 1 weld at each corner.

E. Miscellaneous Roof Deck Accessories: Install ridge and valley plates, finish strips, cover plates, end closures, and reinforcing channels according to deck manufacturer's written instructions. Weld to substrate to provide a complete deck installation.

F. Flexible Closure Strips: Install flexible closure strips over partitions, walls, and where indicated. Install with adhesive according to manufacturer's written instructions to ensure complete closure.

G. Sound-Absorbing Insulation: Installation into topside ribs of deck as specified in Division 07 Section

3.4 FLOOR DECK INSTALLATION

A. Fasten floor deck panels to steel supporting members by arc spot (puddle) welds of the surface diameter indicated and as follows:

1. Weld Diameter and Spacing: As indicated.
2. Weld Washers: Install weld washers at each weld location.

B. Side-Lap and Perimeter Edge Fastening: Fasten side laps and perimeter edges of panels between supports, at intervals not exceeding the lesser of 1/2 of the span or 36 inches (910 mm), and as follows:

1. Mechanically fasten with self-drilling No. 10 (4.8-mm-) diameter or larger carbon-steel screws.
2. Mechanically clinch or button punch.

C. End Bearing: Install deck ends over supporting frame with a minimum end bearing of 1-1/2 inches (38 mm), with end joints as follows:

1. End Joints: Lapped or butted at Contractor's option.

D. Pour Stops and Girder Fillers: Weld steel sheet pour stops and girder fillers to supporting structure according to SDI recommendations, unless otherwise indicated.

E. Floor Deck Closures: Weld steel sheet column closures, cell closures, and Z-closures to deck, according to SDI recommendations, to provide tight-fitting closures at open ends of ribs and sides of decking. Weld cover plates at changes in direction of floor deck panels, unless otherwise indicated.

NOT FOR BIDDING PURPOSES

F. Install piercing hanger tabs not more than 14 inches (355 mm) apart in both directions, within 9 inches (228 mm) of walls at ends, and not more than 12 inches (305 mm) from walls at sides, unless otherwise indicated.

3.5 FIELD QUALITY CONTROL

A. Testing Agency: Owner will engage a qualified testing agency to perform tests and inspections.

B. Field welds will be subject to inspection.

C. Testing agency will report inspection results promptly and in writing to Contractor and Architect.

D. Remove and replace work that does not comply with specified requirements.

E. Additional inspecting, at Contractor's expense, will be performed to determine compliance of corrected work with specified requirements.

3.6 PROTECTION

A. Galvanized repair paint according to ASTM A 780 and manufacturer's written instructions.

B. Repair Painting: Wire brush and clean rust spots, welds, and abraded areas on both surfaces of prime-painted deck immediately after installation, and apply repair paint.

1. Apply repair paint, of same color as adjacent shop-primed deck, to bottom surfaces of deck exposed to view.
2. Wire brushing, cleaning, and repair painting of bottom deck surfaces are included in Division 9 Section.

C. Repair Painting: Wire brushing, cleaning and repair painting of rust spots, welds, and abraded areas of both deck surfaces are included in Division 9.

D. Provide final protection and maintain conditions to ensure that steel deck is without damage or deterioration at time of Substantial Completion.

END OF SECTION 05 31 00

NOT FOR BIDDING PURPOSES

THIS PAGE INTENTIONALLY LEFT BLANK

NOT FOR BIDDING PURPOSES

SECTION 05 40 00

COLD-FORMED METAL FRAMING

NOT FOR BIDDING PURPOSES

PART 1 - GENERAL

1.1 RELATED DOCUMENTS

A. Drawings and general provisions of the Contract, including General and Supplementary Conditions and Division 01 Specification Sections, apply to this Section.

1.2 SUMMARY

A. Section Includes:

1. Exterior Load-bearing wall framing.
2. Exterior non-load-bearing wall framing.
3. Ceiling joist framing.
4. Roof joist framing.
5. Roof truss framing.
6. Exterior soffit framing.
7. Interior soffit and bulkhead framing.

B. Related Requirements:

1. Division 09 Section "Gypsum Board Shaft Wall Assemblies" for interior non-load-bearing, metal-stud-framed, shaft-wall assemblies.
2. Division 09 Section "Non-Structural Metal Framing" for interior non-load-bearing, metal-stud framing and ceiling-suspension assemblies.

1.3 PREINSTALLATION MEETINGS

A. Preinstallation Conference: Conduct conference at Project site.

1.4 ACTION SUBMITTALS

A. Product Data: For each type of cold-formed steel framing product and accessory.

B. Shop Drawings:

1. Include layout, spacings, sizes, thicknesses, and types of cold-formed steel framing; fabrication; and fastening and anchorage details, including mechanical fasteners.
2. Indicate reinforcing channels, opening framing, supplemental framing, strapping, bracing, bridging, splices, accessories, connection details, and attachment to adjoining work.

C. Delegated-Design Submittal: For all cold-formed steel framing, including interior ceiling framing and bulkheads.

1.5 INFORMATIONAL SUBMITTALS

A. Welding certificates.

B. Product Test Reports: For each listed product, for tests performed by manufacturer and witnessed by a qualified testing agency.

1. Steel sheet.
2. Expansion anchors.
3. Power-actuated anchors.
4. Mechanical fasteners.
5. Vertical deflection clips.
6. Horizontal drift deflection clips
7. Miscellaneous structural clips and accessories.

C. Research Reports: For non-standard cold-formed steel framing, from ICC-ES.

1.6 QUALITY ASSURANCE

A. Testing Agency Qualifications: Qualified according to ASTM E 329 for testing indicated.

B. Product Tests: Mill certificates or data from a qualified independent testing agency, or in-house testing with calibrated test equipment indicating steel sheet complies with requirements, including base-metal thickness, yield strength, tensile strength, total elongation, chemical requirements, and metallic-coating thickness.

C. Welding Qualifications: Qualify procedures and personnel according to the following:

1. AWS D1.1/D1.1M, "Structural Welding Code - Steel."
2. AWS D1.3/D1.3M, "Structural Welding Code - Sheet Steel."

1.7 DELIVERY, STORAGE, AND HANDLING

A. Protect cold-formed steel framing from corrosion, moisture staining, deformation, and other damage during delivery, storage, and handling.

PART 2 - PRODUCTS

2.1 MANUFACTURERS

A. Manufacturers: Subject to compliance with requirements, provide products by one of the following:

1. ClarkWestern Building Systems, Inc.

NOT FOR BIDDING PURPOSES

2. Dietrich Metal Framing; a Worthington Industries Company.
3. MarinoWARE.
4. Nuconsteel; a Nucor Company.
5. Steel Network, Inc. (The).
6. Super Stud Building Products, Inc.
7. Telling Industries, LLC.
8. United Metal Products, Inc.

2.2 PERFORMANCE REQUIREMENTS

A. Delegated Design: Engage a qualified professional engineer, as defined in Section 014000 "Quality Requirements," to design cold-formed steel framing.

B. Structural Performance: Provide cold-formed steel framing capable of withstanding design loads within limits and under conditions indicated.

1. Design Loads: As indicated on the drawings.
2. Deflection Limits: Design framing systems to withstand design loads without deflections greater than the following:

   a. Exterior Load-Bearing and Non-Load Bearings Wall Framing: Horizontal deflection of 1/600 of the wall height for studs with brick veneer. Horizontal deflection of 1/360 of the wall height for other walls.
   b. Interior Load-Bearing Wall Framing: Horizontal deflection of 1/360 of the wall height under a horizontal load of 5 lbf/sq. ft..
   c. Ceiling Joist and Bulkhead Framing: Vertical deflection of 1/360 of the span for live loads and 1/240 for total loads of the span.
   d. Roof Joist Framing: Vertical deflection of 1/360 of the span for live loads and 1/280 for total loads of the span.

3. Design framing systems to provide for movement of framing members located outside the insulated building envelope without damage or overstressing, sheathing failure, connection failure, undue strain on fasteners and anchors, or other detrimental effects when subject to a maximum ambient temperature change of 120 deg F.
4. Design framing system to maintain clearances at openings, to allow for construction tolerances, and to accommodate live load deflection of primary building structure as follows:

   a. Upward and downward movement of 3/4 inch.

5. Design exterior non-load-bearing wall framing to accommodate horizontal deflection without regard for contribution of sheathing materials.

C. Cold-Formed Steel Framing Design Standards:

1. Wall Studs: AISI S211.
2. Headers: AISI S212.
3. Lateral Design: AISI S213.

NOT FOR BIDDING PURPOSES

D. AISI Specifications and Standards: Unless more stringent requirements are indicated, comply with AISI S100 and AISI S200.

E. Fire-Resistance Ratings: Comply with ASTM E 119; testing by a qualified testing agency. Identify products with appropriate markings of applicable testing agency.

1. Indicate design designations from UL's "Fire Resistance Directory" or from the listings of another qualified testing agency.

2.3 COLD-FORMED STEEL FRAMING, GENERAL

A. Steel Sheet: ASTM A 1003/A 1003M, Structural Grade, Type H, metallic coated, of grade and coating weight as follows:

1. Grade: As required by structural performance.
2. Coating: G60, unless otherwise indicated.

a. Provide G90 coating on steel stud backup for brick veneer.

B. Steel Sheet for Vertical Deflection Clips: ASTM A 653/A 653M, structural steel, zinc coated, of grade and coating as follows:

1. Grade: As required by structural performance.
2. Coating: G60 (Z180).

2.4 LOAD-BEARING WALL FRAMING

A. Steel Studs: Manufacturer's standard C-shaped steel studs, of web depths indicated, punched, with stiffened flanges, and as follows:

1. Minimum Base-Metal Thickness: 0.054 inch
2. Flange Width: 1-5/8 inches minimum

B. Steel Track: Manufacturer's standard U-shaped steel track, of web depths indicated, unpunched, with straight flanges, and as follows:

1. Minimum Base-Metal Thickness: Matching steel studs.
2. Flange Width: 1-1/4 inches.

C. Steel Box or Back-to-Back Headers: Manufacturer's standard C-shapes used to form header beams, of web depths indicated, unpunched, with stiffened flanges, and as follows:

1. Minimum Base-Metal Thickness: 0.043 inch.
2. Flange Width: 1-5/8 inches minimum

2.5 EXTERIOR NON-LOAD-BEARING WALL FRAMING

A. Steel Studs: Manufacturer's standard C-shaped steel studs, of web depths indicated, punched, with stiffened flanges, and as follows:

NOT FOR BIDDING PURPOSES

1. Minimum Base-Metal Thickness: 0.054 inch
2. Flange Width: 1-5/8 inches minimum

B. Steel Track: Manufacturer's standard U-shaped steel track, of web depths indicated, unpunched, with unstiffened flanges, and as follows:

1. Minimum Base-Metal Thickness: Matching steel studs.
2. Flange Width: 1-1/4 inches

C. Vertical Deflection Clips: Manufacturer's standard bypass or head clips, capable of accommodating upward and downward vertical displacement of primary structure through positive mechanical attachment to stud web.

1. Manufacturers: Subject to compliance with requirements, provide products by one of the following:

a. ClarkWestern Building Systems, Inc.
b. Dietrich Metal Framing; a Worthington Industries Company.
c. MarinoWARE.
d. Steel Network, Inc. (The).

D. Single Deflection Track: Manufacturer's single, deep-leg, U-shaped steel track; unpunched, with unstiffened flanges, of web depth to contain studs while allowing free vertical movement, with flanges designed to support horizontal loads and transfer them to the primary structure, and as follows:

1. Minimum Base-Metal Thickness: 0.0428 inch.
2. Flange Width: 1 inch plus the design gap for one-story structures and 1 inch plus twice the design gap for other applications.

2.6 CEILING JOIST FRAMING

A. Steel Ceiling Joists: Manufacturer's standard C-shaped steel sections, of web depths indicated, with stiffened flanges, and as follows:

1. Minimum Base-Metal Thickness: 0.0329 inch.
2. Flange Width: 1-5/8 inches, minimum.

2.7 ROOF JOIST FRAMING

A. Steel Roof Joists: Manufacturer's standard C-shaped steel sections, of web depths indicated, with stiffened flanges, and as follows:

1. Minimum Base-Metal Thickness: 0.0428 inch.
2. Flange Width: 1-5/8 inches, minimum.

NOT FOR BIDDING PURPOSES

2.8 SOFFIT FRAMING

A. Exterior Soffit Frame: Manufacturer's standard C-shaped steel sections, of web depths indicated, with stiffened flanges, and as follows:

1. Minimum Base-Metal Thickness: 0.0329 inch.
2. Flange Width: 1-5/8 inches, minimum.

2.9 INTERIOR CEILING BULKHEAD AND SOFFIT FRAMING

A. Interior Ceiling Bulkhead and Soffit Framing: Manufacturer's standard C-shaped steel sections, of web depths indicated, with stiffened flanges, and as follows:

1. Minimum Base-Metal Thickness: 0.0329 inch.
2. Flange Width: 1-5/8 inches, minimum.

2.10 FRAMING ACCESSORIES

A. Fabricate steel-framing accessories from steel sheet, ASTM A 1003/A 1003M, Structural Grade, Type H, metallic coated, of same grade and coating weight used for framing members.

B. Provide accessories of manufacturer's standard thickness and configuration, unless otherwise indicated, as follows:

1. Supplementary framing.
2. Bracing, bridging, and solid blocking.
3. Web stiffeners.
4. Anchor clips.
5. End clips.
6. Foundation clips.
7. Gusset plates.
8. Stud kickers and knee braces.
9. Joist hangers and end closures.
10. Hole reinforcing plates.
11. Backer plates.

2.11 ANCHORS, CLIPS, AND FASTENERS

A. Steel Shapes and Clips: ASTM A 36/A 36M, zinc coated by hot-dip process according to ASTM A 123/A 123M.

B. Anchor Bolts: ASTM F 1554, Grade 36, threaded carbon-steel headless, hooked bolts and carbon-steel nuts; and flat, hardened-steel washers; zinc coated by hot-dip process according to ASTM A 153/A 153M, Class C.

C. Expansion Anchors: Fabricated from corrosion-resistant materials, with allowable load or strength design capacities calculated according to ICC-ES AC193 and ACI 318 greater than or

NOT FOR BIDDING PURPOSES

equal to the design load, as determined by testing per ASTM E 488 conducted by a qualified testing agency.

D. Power-Actuated Anchors: Fastener system of type suitable for application indicated, fabricated from corrosion-resistant materials, with allowable load capacities calculated according to ICC-ES AC70, greater than or equal to the design load, as determined by testing per ASTM E 1190 conducted by a qualified testing agency.

E. Mechanical Fasteners: ASTM C 1513, corrosion-resistant-coated, self-drilling, self-tapping, steel drill screws.

1. Head Type: Low-profile head beneath sheathing, manufacturer's standard elsewhere.

F. Welding Electrodes: Comply with AWS standards.

2.12 MISCELLANEOUS MATERIALS

A. Galvanizing Repair Paint: SSPC-Paint 20 or MIL-P-21035B.

B. Cement Grout: Portland cement, ASTM C 150, Type I; and clean, natural sand, ASTM C 404. Mix at ratio of 1 part cement to 2-1/2 parts sand, by volume, with minimum water required for placement and hydration.

C. Nonmetallic, Nonshrink Grout: Premixed, nonmetallic, noncorrosive, nonstaining grout containing selected silica sands, portland cement, shrinkage-compensating agents, and plasticizing and water-reducing agents, complying with ASTM C 1107/C 1107M, with fluid consistency and 30-minute working time.

D. Shims: Load bearing, high-density multimonomer plastic, and nonleaching; or of cold-formed steel of same grade and coating as framing members supported by shims.

E. Sealer Gaskets: Closed-cell neoprene foam, 1/4 inch thick, selected from manufacturer's standard widths to match width of bottom track or rim track members.

2.13 FABRICATION

A. Fabricate cold-formed steel framing and accessories plumb, square, and true to line, and with connections securely fastened, according to referenced AISI's specifications and standards, manufacturer's written instructions, and requirements in this Section.

1. Fabricate framing assemblies using jigs or templates.
2. Cut framing members by sawing or shearing; do not torch cut.
3. Fasten cold-formed steel framing members by welding, screw fastening, clinch fastening, pneumatic pin fastening, or riveting as standard with fabricator. Wire tying of framing members is not permitted.

   a. Comply with AWS D1.3/D1.3M requirements and procedures for welding, appearance and quality of welds, and methods used in correcting welding work.
   b. Locate mechanical fasteners and install according to Shop Drawings, with screw penetrating joined members by no fewer than three exposed screw threads.

NOT FOR BIDDING PURPOSES

4. Fasten other materials to cold-formed steel framing by welding, bolting, pneumatic pin fastening, or screw fastening, according to Shop Drawings.

B. Reinforce, stiffen, and brace framing assemblies to withstand handling, delivery, and erection stresses. Lift fabricated assemblies to prevent damage or permanent distortion.

C. Fabrication Tolerances: Fabricate assemblies level, plumb, and true to line to a maximum allowable tolerance variation of 1/8 inch in 10 feet and as follows:

1. Spacing: Space individual framing members no more than plus or minus 1/8 inch from plan location. Cumulative error shall not exceed minimum fastening requirements of sheathing or other finishing materials.
2. Squareness: Fabricate each cold-formed steel framing assembly to a maximum out-of-square tolerance of 1/8 inch.

PART 3 - EXECUTION

3.1 EXAMINATION

A. Examine supporting substrates and abutting structural framing for compliance with requirements for installation tolerances and other conditions affecting performance of the Work.

B. Proceed with installation only after unsatisfactory conditions have been corrected.

3.2 PREPARATION

A. Before sprayed fire-resistive materials are applied, attach continuous angles, supplementary framing, or tracks to structural members indicated to receive sprayed fire-resistive materials.

B. After applying sprayed fire-resistive materials, remove only as much of these materials as needed to complete installation of cold-formed framing without reducing thickness of fire-resistive materials below that are required to obtain fire-resistance rating indicated. Protect remaining fire-resistive materials from damage.

C. Install load bearing shims or grout between the underside of load-bearing wall bottom track and the top of foundation wall or slab at locations with a gap larger than 1/8 inch to ensure a uniform bearing surface on supporting concrete or masonry construction.

3.3 INSTALLATION, GENERAL

A. Cold-formed steel framing may be shop or field fabricated for installation, or it may be field assembled.

B. Install cold-formed steel framing according to AISI S200 and to manufacturer's written instructions unless more stringent requirements are indicated.

C. Install shop- or field-fabricated, cold-formed framing and securely anchor to supporting structure.

NOT FOR BIDDING PURPOSES

1. Screw, bolt, or weld wall panels at horizontal and vertical junctures to produce flush, even, true-to-line joints with maximum variation in plane and true position between fabricated panels not exceeding 1/16 inch.

D. Install cold-formed steel framing and accessories plumb, square, and true to line, and with connections securely fastened.

1. Cut framing members by sawing or shearing; do not torch cut.
2. Fasten cold-formed steel framing members by welding, screw fastening, clinch fastening, or riveting. Wire tying of framing members is not permitted.

a. Comply with AWS D1.3/D1.3M requirements and procedures for welding, appearance and quality of welds, and methods used in correcting welding work.
b. Locate mechanical fasteners and install according to Shop Drawings, and complying with requirements for spacing, edge distances, and screw penetration.

E. Install framing members in one-piece lengths unless splice connections are indicated for track or tension members.

F. Install temporary bracing and supports to secure framing and support loads comparable in intensity to those for which structure was designed. Maintain braces and supports in place, undisturbed, until entire integrated supporting structure has been completed and permanent connections to framing are secured.

G. Do not bridge building expansion joints with cold-formed steel framing. Independently frame both sides of joints.

H. Install insulation, specified in Section 072100 "Thermal Insulation," in built-up exterior framing members, such as headers, sills, boxed joists, and multiple studs at openings, that are inaccessible on completion of framing work.

I. Fasten hole reinforcing plate over web penetrations that exceed size of manufacturer's approved or standard punched openings.

J. Erection Tolerances: Install cold-formed steel framing level, plumb, and true to line to a maximum allowable tolerance variation of 1/8 inch in 10 feet and as follows:

1. Space individual framing members no more than plus or minus 1/8 inch from plan location. Cumulative error shall not exceed minimum fastening requirements of sheathing or other finishing materials.

3.4 LOAD-BEARING WALL INSTALLATION

A. Install continuous top and bottom tracks sized to match studs. Align tracks accurately and securely anchor at corners and ends, and at spacings as follows:

1. Anchor Spacing: As determined by specialty engineer.

NOT FOR BIDDING PURPOSES

B. Squarely seat studs against top and bottom tracks with gap not exceeding of 1/8 inch between the end of wall framing member and the web of track. Fasten both flanges of studs to top and bottom tracks. Space studs as follows:

1. Stud Spacing: As determined by specialty engineer

C. Set studs plumb, except as needed for diagonal bracing or required for nonplumb walls or warped surfaces and similar configurations.

D. Align studs vertically where floor framing interrupts wall-framing continuity. Where studs cannot be aligned, continuously reinforce track to transfer loads.

E. Align floor and roof framing over studs according to AISI S200, Section C1. Where framing cannot be aligned, continuously reinforce track to transfer loads.

F. Anchor studs abutting structural columns or walls, including masonry walls, to supporting structure as indicated.

G. Install headers over wall openings wider than stud spacing. Locate headers above openings as indicated. Fabricate headers of compound shapes indicated or required to transfer load to supporting studs, complete with clip-angle connectors, web stiffeners, or gusset plates.

1. Frame wall openings with not less than a double stud at each jamb of frame as indicated on Shop Drawings. Fasten jamb members together to uniformly distribute loads.
2. Install runner tracks and jack studs above and below wall openings. Anchor tracks to jamb studs with clip angles or by welding, and space jack studs same as full-height wall studs.

H. Install supplementary framing, blocking, and bracing in stud framing indicated to support fixtures, equipment, services, casework, heavy trim, furnishings, and similar work requiring attachment to framing.

1. If type of supplementary support is not indicated, comply with stud manufacturer's written recommendations and industry standards in each case, considering weight or load resulting from item supported.

I. Install horizontal bridging in stud system, spaced vertically as indicated on Shop Drawings, but not more than 48 inches apart. Fasten at each stud intersection.

1. Bridging: Cold-rolled steel channel, welded or mechanically fastened to webs of punched studs with a minimum of two screws into each flange of the clip angle for framing members up to 6 inches deep.
2. Bridging: Combination of flat, taut, steel sheet straps of width and thickness indicated and stud-track solid blocking of width and thickness to match studs. Fasten flat straps to stud flanges and secure solid blocking to stud webs or flanges.
3. Bridging: Proprietary bridging bars installed according to manufacturer's written instructions.

J. Install steel sheet diagonal bracing straps to both stud flanges, terminate at and fasten to reinforced top and bottom tracks. Fasten clip-angle connectors to multiple studs at ends of bracing and anchor to structure.

NOT FOR BIDDING PURPOSES

K. Install miscellaneous framing and connections, including supplementary framing, web stiffeners, clip angles, continuous angles, anchors, and fasteners, to provide a complete and stable wall-framing system.

3.5 EXTERIOR NON-LOAD-BEARING WALL INSTALLATION

A. Install continuous tracks sized to match studs. Align tracks accurately and securely anchor to supporting structure as indicated.

B. Fasten both flanges of studs to top and bottom track unless otherwise indicated. Space studs as follows:

1. Stud Spacing: As determined by specialty engineer

C. Set studs plumb, except as needed for diagonal bracing or required for nonplumb walls or warped surfaces and similar requirements.

D. Isolate non-load-bearing steel framing from building structure to prevent transfer of vertical loads while providing lateral support.

1. Install single deep-leg deflection tracks and anchor to building structure, or
2. Connect vertical deflection clips to infill studs and anchor to building structure.

E. Install horizontal bridging in wall studs, spaced vertically in rows indicated on Shop Drawings but not more than 48 inches apart. Fasten at each stud intersection.

1. Top Bridging for Single Deflection Track: Install row of horizontal bridging within 12 inches of single deflection track. Install a combination of bridging and stud or stud-track solid blocking of width and thickness matching studs, secured to stud webs or flanges.

   a. Install solid blocking at centers indicated on Shop Drawings.

2. Bridging: Cold-rolled steel channel, welded or mechanically fastened to webs of punched studs.
3. Bridging: Combination of flat, taut, steel sheet straps of width and thickness indicated and stud-track solid blocking of width and thickness to match studs. Fasten flat straps to stud flanges and secure solid blocking to stud webs or flanges.
4. Bridging: Proprietary bridging bars installed according to manufacturer's written instructions.

F. Install miscellaneous framing and connections, including stud kickers, web stiffeners, clip angles, continuous angles, anchors, and fasteners, to provide a complete and stable wall-framing system.

3.6 REPAIRS AND PROTECTION

A. Galvanizing Repairs: Prepare and repair damaged galvanized coatings on fabricated and installed cold-formed steel framing with galvanized repair paint according to ASTM A 780 and manufacturer's written instructions.

NOT FOR BIDDING PURPOSES

B. Provide final protection and maintain conditions, in a manner acceptable to manufacturer and Installer, that ensure that cold-formed steel framing is without damage or deterioration at time of Substantial Completion.

END OF SECTION 05 40 00

NOT FOR BIDDING PURPOSES

NOT FOR BIDDING PURPOSES

SECTION 05 52 13

PIPE AND TUBE RAILINGS

PART 1 - GENERAL

1.1 RELATED DOCUMENTS

A. Drawings and general provisions of the Contract, including General and Supplementary Conditions and Division 01 Specification Sections, apply to this Section.

1.2 SUMMARY

A. Section Includes:

1. Interior steel pipe railings.

B. Related Sections:

1. Division 06 Section "Miscellaneous Rough Carpentry" for wood blocking for anchoring railings.

1.3 COORDINATION

A. Coordinate selection of shop primers with topcoats to be applied over them. Comply with paint and coating manufacturers' written recommendations to ensure that shop primers and topcoats are compatible with one another.

B. Coordinate installation of anchorages for railings. Furnish setting drawings, templates, and directions for installing anchorages, including sleeves, concrete inserts, anchor bolts, and items with integral anchors, that are to be embedded in concrete or masonry. Deliver such items to Project site in time for installation.

C. Schedule installation so wall attachments are made only to completed walls. Do not support railings temporarily by any means that do not satisfy structural performance requirements.

1.4 ACTION SUBMITTALS

A. Product Data: For the following:

1. Manufacturer's product lines of mechanically connected railings.
2. Railing brackets.
3. Grout, anchoring cement, and paint products.

B. Shop Drawings: Include plans, elevations, sections, details, and attachments to other work.

C. Samples for Initial Selection: For products involving selection of color, texture, or design, including

mechanical finishes.

D. Samples for Verification: For each type of exposed finish required.

1. Sections of each distinctly different linear railing member, including handrails, top rails, posts, and balusters.
2. Fittings and brackets.
3. Assembled Sample of railing system, made from full-size components, including top rail, post, handrail, and infill. Sample need not be full height.

    a. Show method of connecting members at intersections.

E. Delegated-Design Submittal: For railings, including analysis data signed and sealed by the qualified professional engineer responsible for their preparation.

1.5 INFORMATIONAL SUBMITTALS

A. Qualification Data: For testing agency.

B. Welding certificates.

C. Paint Compatibility Certificates: From manufacturers of topcoats applied over shop primers certifying that shop primers are compatible with topcoats.

D. Product Test Reports: For pipe and tube railings, for tests performed by a qualified testing agency, according to ASTM E 894 and ASTM E 935.

E. Evaluation Reports: For post-installed anchors, from ICC-ES.

1.6 QUALITY ASSURANCE

A. Welding Qualifications: Qualify procedures and personnel according to the following:

1. AWS D1.1/D1.1M, "Structural Welding Code -Steel."
2. AWS D1.2/D1.2M, "Structural Welding Code -Aluminum."

1.7 DELIVERY, STORAGE, AND HANDLING

A. Protect mechanical finishes on exposed surfaces from damage by applying a strippable, temporary protective covering before shipping.

1.8 FIELD CONDITIONS

A. Field Measurements: Verify actual locations of walls and other construction contiguous with metal fabrications by field measurements before fabrication.

NOT FOR BIDDING PURPOSES

PART 2 - PRODUCTS

2.1 PERFORMANCE REQUIREMENTS

A. Delegated Design: Engage a qualified professional engineer, as defined in Section 014000 "Quality Requirements," to design railings, including attachment to building construction.

B. Structural Performance: Railings, including attachment to building construction, shall withstand the effects of gravity loads and the following loads and stresses within limits and under conditions indicated:

1. Handrails:

a. Uniform load of 50 lbf/ ft.applied in any direction.
b. Concentrated load of 200 lbf applied in any direction.
c. Uniform and concentrated loads need not be assumed to act concurrently.

C. Thermal Movements: Allow for thermal movements from ambient and surface temperature changes.

1. Temperature Change: 120 deg F, ambient; 180 deg F, material surfaces.

2.2 METALS, GENERAL

A. Metal Surfaces, General: Provide materials with smooth surfaces, without seam marks, roller marks, rolled trade names, stains, discolorations, or blemishes.

B. Brackets, Flanges, and Anchors: Cast or formed metal of same type of material and finish as supported rails unless otherwise indicated.

2.3 STEEL AND IRON

A. Pipe: ASTM A 53/A 53M, Type F or Type S, Grade A, Standard Weight (Schedule 40), unless another grade and weight are required by structural loads.

B. Plates, Shapes, and Bars: ASTM A 36/A 36M.

2.4 ALUMINUM

A. Aluminum, General: Provide alloy and temper recommended by aluminum producer and finisher for type of use and finish indicated, and with not less than the strength and durability properties of alloy and temper designated below for each aluminum form required.

B. Extruded Bars and Tubing: ASTM B 221, Alloy 6063-T5/T52.

C. Drawn Seamless Tubing: ASTM B 210, Alloy 6063-T832.

NOT FOR BIDDING PURPOSES

D. Plate and Sheet: ASTM B 209, Alloy 6061-T6.

E. Die and Hand Forgings: ASTM B 247, Alloy 6061-T6.

F. Castings: ASTM B 26/B 26M, Alloy A356.0-T6.

2.5 FASTENERS

A. General: Provide the following:

1. Ungalvanized-Steel Railings: Plated steel fasteners complying with ASTM B 633 or ASTM F 1941, Class Fe/Zn 5 for zinc coating.
2. Aluminum Railings: Type 316 stainless-steel fasteners.

B. Fasteners for Anchoring Railings to Other Construction: Select fasteners of type, grade, and class required to produce connections suitable for anchoring railings to other types of construction indicate and capable of withstanding design loads.

C. Fasteners for Interconnecting Railing Components:

1. Provide concealed fasteners for interconnecting railing components and for attaching them to other work, unless otherwise indicated.
2. Provide tamper-resistant flat-head machine screws for exposed fasteners unless otherwise indicated.

D. Post-Installed Anchors: Torque-controlled expansion anchors or chemical anchor capable of sustaining, without failure, a load equal to six times the load imposed when installed in unit masonry and four times the load imposed when installed in concrete, as determined by testing according to ASTM E 488, conducted by a qualified independent testing agency.

1. Material for Interior Locations: Carbon-steel components zinc-plated to comply with ASTM B 633 or ASTM F 1941, Class Fe/Zn 5, unless otherwise indicated.

2.6 MISCELLANEOUS MATERIALS

A. Welding Rods and Bare Electrodes: Select according to AWS specifications for metal alloy welded.

1. For aluminum railings, provide type and alloy as recommended by producer of metal to be welded and as required for color match, strength, and compatibility in fabricated items.

B. Universal Shop Primer: Fast-curing, lead-and chromate-free, universal modified-alkyd primer complying with MPI#79 and compatible with topcoat.

1. Use primer containing pigments that make it easily distinguishable from zinc-rich primer.

C. Epoxy Zinc-Rich Primer: Complying with MPI#20 and compatible with topcoat.

D. Bituminous Paint: Cold-applied asphalt emulsion complying with ASTM D 1187.

2.7 FABRICATION

A. General: Fabricate railings to comply with requirements indicated for design, dimensions, member sizes

NOT FOR BIDDING PURPOSES

and spacing, details, finish, and anchorage, but not less than that required to support structural load.

B. Shop assemble railings to greatest extent possible to minimize field splicing and assembly. Disassemble units only as necessary for shipping and handling limitations. Clearly mark units for reassembly and coordinated installation. Use connections that maintain structural value of joined pieces.

C. Cut, drill, and punch metals cleanly and accurately. Remove burrs and ease edges to a radius of approximately 1/32 inch unless otherwise indicated. Remove sharp or rough areas on exposed surfaces.

D. Form work true to line and level with accurate angles and surfaces.

E. Fabricate connections that will be exposed to weather in a manner to exclude water. Provide weep holes where water may accumulate.

F. Cut, reinforce, drill, and tap as indicated to receive finish hardware, screws, and similar items.

G. Connections: Fabricate railings with either welded or nonwelded connections unless otherwise indicated.

H. Welded Connections: Cope components at connections to provide close fit, or use fittings designed for this purpose. Weld all around at connections, including at fittings.

1. Use materials and methods that minimize distortion and develop strength and corrosion resistance of base metals.
2. Obtain fusion without undercut or overlap.
3. Remove flux immediately.
4. At exposed connections, finish exposed surfaces smooth and blended so no roughness shows after finishing and welded surface matches contours of adjoining surfaces.

I. Nonwelded Connections: Connect members with concealed mechanical fasteners and fittings. Fabricate members and fittings to produce flush, smooth, rigid, hairline joints.

1. Fabricate splice joints for field connection using an epoxy structural adhesive if this is manufacturer's standard splicing method.

J. Form changes in direction as follows:

1. As detailed.

K. Close exposed ends of railing members with prefabricated end fittings.

L. Provide wall returns at ends of wall-mounted handrails unless otherwise indicated. Close ends of returns unless clearance between end of rail and wall is 1/4 inch or less.

M. Brackets, Flanges, Fittings, and Anchors: Provide wall brackets, flanges, miscellaneous fittings, and anchors to interconnect railing members to other work unless otherwise indicated.

1. At brackets and fittings fastened to plaster or gypsum board partitions, provide crush-resistant fillers or other means to transfer loads through wall finishes to structural supports and prevent bracket or fitting rotation and crushing of substrate.

NOT FOR BIDDING PURPOSES

N. Provide inserts and other anchorage devices for connecting railings to concrete or masonry work. Fabricate anchorage devices capable of withstanding loads imposed by railings. Coordinate anchorage devices with supporting structure.

O. For railing posts set in concrete, provide stainless-steel sleeves not less than 6 inches long with inside dimensions not less than 1/2 inch greater than outside dimensions of post, with metal plate forming bottom closure.

2.8 STEEL AND IRON FINISHES

A. For nongalvanized-steel railings, provide nongalvanized ferrous-metal fittings, brackets, fasteners, and sleeves; however, galvanize anchors to be embedded in exterior concrete or masonry.

B. Preparation for Shop Priming: Prepare uncoated ferrous-metal surfaces to comply with requirements indicated below:

1. Railings Indicated to Receive Zinc-Rich Primer: SSPC-SP 6/NACE No. 3, "Commercial Blast Cleaning."
2. Other Railings: SSPC-SP 3, "Power Tool Cleaning."

C. Primer Application: Apply shop primer to prepared surfaces of railings unless otherwise indicated. Comply with requirements in SSPC-PA 1, "Paint Application Specification No. 1: Shop, Field, and Maintenance Painting of Steel," for shop painting. Primer need not be applied to surfaces to be embedded in concrete or masonry.

1. Shop prime uncoated railings with universal shop primer unless zinc-rich primer is indicated.
2. Prepare for field painting as specified in Section 099123.

2.9 ALUMINUM FINISHES

A. Appearance of Finished Work: Variations in appearance of abutting or adjacent pieces are acceptable if they are within one-half of the range of approved Samples. Noticeable variations in the same piece are unacceptable. Variations in appearance of other components are acceptable if they are within the range of approved Samples and are assembled or installed to minimize contrast.

B. Clear Anodic Finish: AAMA 611, AA-M12C22A41.

PART 3 - EXECUTION

3.1 EXAMINATION

A. Examine plaster and gypsum board assemblies, where reinforced to receive anchors, to verify that locations of concealed reinforcements have been clearly marked for Installer. Locate reinforcements and mark locations if not already done.

3.2 INSTALLATION, GENERAL

A. Fit exposed connections together to form tight, hairline joints.

B. Perform cutting, drilling, and fitting required for installing railings. Set railings accurately in location,

NOT FOR BIDDING PURPOSES

alignment, and elevation; measured from established lines and levels and free of rack.

1. Do not weld, cut, or abrade surfaces of railing components that have been coated or finished after fabrication and that are intended for field connection by mechanical or other means without further cutting or fitting.
2. Set posts plumb within a tolerance of 1/16 inch in 3 feet.
3. Align rails so variations from level for horizontal members and variations from parallel with rake of steps and ramps for sloping members do not exceed 1/4 inch in 12 feet.

C. Corrosion Protection: Coat concealed surfaces of aluminum that will be in contact with grout, concrete, masonry, wood, or dissimilar metals, with a heavy coat of bituminous paint.

1. Coat, with a heavy coat of bituminous paint, concealed surfaces of aluminum that are in contact with grout, concrete, masonry, wood, or dissimilar metals.

D. Adjust railings before anchoring to ensure matching alignment at abutting joints.

E. Fastening to In-Place Construction: Use anchorage devices and fasteners where necessary for securing railings and for properly transferring loads to in-place construction.

3.3 RAILING CONNECTIONS

A. Nonwelded Connections: Use mechanical or adhesive joints for permanently connecting railing components. Seal recessed holes of exposed locking screws using plastic cement filler colored to match finish of railings.

B. Welded Connections: Use fully welded joints for permanently connecting railing components. Comply with requirements for welded connections in "Fabrication" Article whether welding is performed in the shop or in the field.

C. Expansion Joints: Install expansion joints at locations indicated but not farther apart than required to accommodate thermal movement. Provide slip-joint internal sleeve extending 2 inches beyond joint on either side, fasten internal sleeve securely to one side, and locate joint within 6 inches of post.

3.5 ATTACHING RAILINGS

A. Secure wall brackets and railing end flanges to building construction as follows:

1. For concrete and solid masonry anchorage, use drilled-in expansion shields and hanger or lag bolts.
2. For hollow masonry anchorage, use toggle bolts.
3. For steel-framed partitions, use self-tapping screws fastened to steel framing or to concealed steel reinforcements.

3.6 ADJUSTING AND CLEANING

A. Clean aluminum by washing thoroughly with clean water and soap and rinsing with clean water.

B. Touchup Painting: Immediately after erection, clean field welds, bolted connections, and abraded areas of shop paint, and paint exposed areas with the same material as used for shop painting to comply with SSPC-PA 1 for touching up shop-painted surfaces.

NOT FOR BIDDING PURPOSES

1. Apply by brush or spray to provide a minimum 2.0-mil dry film thickness.

3.7 PROTECTION

A. Protect finishes of railings from damage during construction period with temporary protective coverings approved by railing manufacturer. Remove protective coverings at time of Substantial Completion.

END OF SECTION 05 52 13

NOT FOR BIDDING PURPOSES

SECTION 06 10 00

ROUGH CARPENTRY

NOT FOR BIDDING PURPOSES

PART 1 - GENERAL

1.1 RELATED DOCUMENTS

A. Drawings and general provisions of the Contract, including General and Supplementary Conditions and Division 01 Specification Sections, apply to this Section.

1.2 SUMMARY

A. Section Includes:

1. Framing with dimension lumber.
2. Blocking for rooftop equipment bases and support curbs.
3. Wood blocking and nailers.
4. Wood sleepers.
5. Plywood backing panels.

B. Related Requirements:

1. Section 06 16 00 "Sheathing."

1.3 DEFINITIONS

A. Dimension Lumber: Lumber of 2 inches nominal or greater but less than 5 inches nominal in least dimension.

B. Lumber grading agencies, and the abbreviations used to reference them, include the following:

1. NeLMA: Northeastern Lumber Manufacturers' Association.
2. NLGA: National Lumber Grades Authority.
3. RIS: Redwood Inspection Service.
4. SPIB: The Southern Pine Inspection Bureau.
5. WCLIB: West Coast Lumber Inspection Bureau.
6. WWPA: Western Wood Products Association.

1.4 ACTION SUBMITTALS

A. Product Data: For each type of process and factory-fabricated product. Indicate component materials and dimensions and include construction and application details.

1. Include data for wood-preservative treatment from chemical treatment manufacturer and certification by treating plant that treated materials comply with requirements. Indicate type of preservative used and net amount of preservative retained.
2. Include data for fire-retardant treatment from chemical treatment manufacturer and certification by treating plant that treated materials comply with requirements. Include physical properties of treated materials based on testing by a qualified independent testing agency.
3. For fire-retardant treatments, include physical properties of treated lumber both before and after exposure to elevated temperatures, based on testing by a qualified independent testing agency according to ASTM D 5664.
4. For products receiving a waterborne treatment, include statement that moisture content of treated materials was reduced to levels specified before shipment to Project site.
5. Include copies of warranties from chemical treatment manufacturers for each type of treatment.

1.5 INFORMATIONAL SUBMITTALS

A. Material Certificates: For dimension lumber specified to comply with minimum allowable unit stresses. Indicate species and grade selected for each use and design values approved by the ALSC Board of Review.

B. Evaluation Reports: For the following, from ICC-ES:

1. Wood-preservative-treated wood.
2. Power-driven fasteners.
3. Powder-actuated fasteners.
4. Expansion anchors.
5. Metal framing anchors.

1.6 QUALITY ASSURANCE

A. Testing Agency Qualifications: For testing agency providing classification marking for fire-retardant treated material, an inspection agency acceptable to authorities having jurisdiction that periodically performs inspections to verify that the material bearing the classification marking is representative of the material tested.

1.7 DELIVERY, STORAGE, AND HANDLING

A. Stack lumber flat with spacers beneath and between each bundle to provide air circulation. Protect lumber from weather by covering with waterproof sheeting, securely anchored. Provide for air circulation around stacks and under coverings.

NOT FOR BIDDING PURPOSES

PART 2 - PRODUCTS

2.1 WOOD PRODUCTS, GENERAL

A. Lumber: DOC PS 20 and applicable rules of grading agencies indicated. If no grading agency is indicated, provide lumber that complies with the applicable rules of any rules-writing agency certified by the ALSC Board of Review. Provide lumber graded by an agency certified by the ALSC Board of Review to inspect and grade lumber under the rules indicated.

1. Factory mark each piece of lumber with grade stamp of grading agency.
2. Where nominal sizes are indicated, provide actual sizes required by DOC PS 20 for moisture content specified. Where actual sizes are indicated, they are minimum dressed sizes for dry lumber.
3. Provide dressed lumber, S4S, unless otherwise indicated.

B. Maximum Moisture Content of Lumber: 15 percent unless otherwise indicated.

2.2 FIRE-RETARDANT-TREATED MATERIALS

A. General: Where fire-retardant-treated materials are indicated, use materials complying with requirements in this article, that are acceptable to authorities having jurisdiction, and with fire-test-response characteristics specified as determined by testing identical products per test method indicated by a qualified testing agency.

B. Fire-Retardant-Treated Lumber and Plywood by Pressure Process: Products with a flame spread index of 25 or less when tested according to ASTM E 84, and with no evidence of significant progressive combustion when the test is extended an additional 20 minutes, and with the flame front not extending more than 10.5 feet (3.2 m) beyond the centerline of the burners at any time during the test.

1. Use treatment that does not promote corrosion of metal fasteners.
2. Interior Type A: Treated materials shall have a moisture content of 28 percent or less when tested according to ASTM D 3201 at 92 percent relative humidity. Use where exterior type is not indicated.
3. Design Value Adjustment Factors: Treated lumber shall be tested according ASTM D 5664 and design value adjustment factors shall be calculated according to ASTM D 6841. For enclosed roof framing, framing in attic spaces, and where high temperature fire-retardant treatment is indicated, provide material with adjustment factors of not less than 0.85 modulus of elasticity and 0.75 for extreme fiber in bending for Project's climatological zone.

C. Kiln-dry lumber after treatment to a maximum moisture content of 19 percent. Kiln-dry plywood after treatment to a maximum moisture content of 15 percent.

D. Identify fire-retardant-treated wood with appropriate classification marking of qualified testing agency.

E. Application: Treat items indicated on Drawings, and the following:

NOT FOR BIDDING PURPOSES

1. Concealed blocking.
2. Plywood backing panels.

2.3 WOOD-PRESERVATIVE-TREATED LUMBER

A. Preservative Treatment by Pressure Process: AWPA U1; Use Category UC2 for interior construction not in contact with the ground, Use Category UC3b for exterior construction not in contact with the ground, and Use Category UC4a for items in contact with the ground.

1. Preservative Chemicals: Acceptable to authorities having jurisdiction and containing no arsenic or chromium. Do not use inorganic boron (SBX) for sill plates.

B. Kiln-dry lumber after treatment to a maximum moisture content of 19 percent. Do not use material that is warped or that does not comply with requirements for untreated material.

C. Mark lumber with treatment quality mark of an inspection agency approved by the ALSC Board of Review.

D. Application: Treat items indicated on Drawings, and the following:

1. Wood sills, sleepers, blocking, and similar concealed members in contact with masonry or concrete.
2. Wood floor plates that are installed over concrete slabs-on-grade.

2.4 MISCELLANEOUS LUMBER

A. General: Provide miscellaneous lumber indicated and lumber for support or attachment of other construction, including the following:

1. Blocking.
2. Nailers.
3. Rooftop equipment bases and support curbs.

B. For items of dimension lumber size, provide Construction or No. 2 grade lumber and the following species:

1. Hem-fir (north); NLGA.
2. Mixed southern pine; SPIB.
3. Spruce-pine-fir; NLGA.

C. For concealed boards, provide lumber with 15 percent maximum moisture content and the following species and grades:

1. Mixed southern pine; No. 2 grade; SPIB.
2. Hem-fir or hem-fir (north); Construction or No. 2 Common grade; NLGA, WCLIB, or WWPA.
3. Spruce-pine-fir (south) or spruce-pine-fir; Construction or No. 2 Common grade; NeLMA, NLGA, WCLIB, or WWPA.

NOT FOR BIDDING PURPOSES

D. For blocking not used for attachment of other construction, Utility, Stud, or No. 3 grade lumber of any species may be used provided that it is cut and selected to eliminate defects that will interfere with its attachment and purpose.

E. For blocking and nailers used for attachment of other construction, select and cut lumber to eliminate knots and other defects that will interfere with attachment of other work.

2.5 PLYWOOD BACKING PANELS

A. Equipment Backing Panels: DOC PS 1, Exposure 1, C-D Plugged, fire-retardant treated, in thickness indicated or, if not indicated, not less than 1/2-inch nominal thickness.

2.6 FASTENERS

A. General: Provide fasteners of size and type indicated that comply with requirements specified in this article for material and manufacture.

1. Where rough carpentry is exposed to weather, in ground contact, pressure-preservative treated, or in area of high relative humidity, provide fasteners with hot-dip zinc coating complying with ASTM A 153/A 153M.

B. Nails, Brads, and Staples: ASTM F 1667.

C. Power-Driven Fasteners: NES NER-272.

D. Wood Screws: ASME B18.6.1.

E. Lag Bolts: ASME B18.2.1.

F. Bolts: Steel bolts complying with ASTM A 307, Grade A; with ASTM A 563 hex nuts and, where indicated, flat washers.

G. Expansion Anchors: Anchor bolt and sleeve assembly of material indicated below with capability to sustain, without failure, a load equal to six times the load imposed when installed in unit masonry assemblies and equal to four times the load imposed when installed in concrete as determined by testing per ASTM E 488 conducted by a qualified independent testing and inspecting agency.

1. Material: Carbon-steel components, zinc plated to comply with ASTM B 633, Class Fe/Zn 5.
2. Material: Stainless steel with bolts and nuts complying with ASTM F 593 and ASTM F 594, Alloy Group 1 or 2.

2.7 METAL FRAMING ANCHORS

A. Basis-of-Design Product: Subject to compliance with requirements, provide product indicated on Drawings or comparable product by one of the following:

1. Cleveland Steel Specialty Co.

NOT FOR BIDDING PURPOSES

2. KC Metals Products, Inc.
3. Phoenix Metal Products, Inc.
4. Simpson Strong-Tie Co., Inc.
5. USP Structural Connectors.

B. Allowable Design Loads: Provide products with allowable design loads, as published by manufacturer that meet or exceed those of basis-of-design products. Manufacturer's published values shall be determined from empirical data or by rational engineering analysis and demonstrated by comprehensive testing performed by a qualified independent testing agency.

C. Galvanized-Steel Sheet: Hot-dip, zinc-coated steel sheet complying with ASTM A 653/A 653M, G60 coating designation.

1. Use for interior locations unless otherwise indicated.

D. Hot-Dip, Heavy-Galvanized Steel Sheet: ASTM A 653/A 653M; structural steel (SS), high-strength low-alloy steel Type A (HSLAS Type A), or high-strength low-alloy steel Type B (HSLAS Type B); G185 coating designation; and not less than 0.036 inch thick.

1. Use for wood-preservative-treated lumber and where indicated.

PART 3 - EXECUTION

3.1 INSTALLATION, GENERAL

A. Set rough carpentry to required levels and lines, with members plumb, true to line, cut, and fitted. Fit rough carpentry to other construction; scribe and cope as needed for accurate fit. Locate nailers, blocking, and similar supports to comply with requirements for attaching other construction.

B. Framing Standard: Comply with AF&PA's WCD 1, "Details for Conventional Wood Frame Construction," unless otherwise indicated.

C. Install plywood backing panels by fastening to studs; coordinate locations with utilities requiring backing panels. Install fire-retardant treated plywood backing panels with classification marking of testing agency exposed to view.

D. Metal Framing Anchors: Install metal framing anchors to comply with manufacturer's written instructions. Install fasteners through each fastener hole.

E. Install sill sealer gasket to form continuous seal between sill plates and foundation walls.

F. Do not splice structural members between supports unless otherwise indicated.

G. Provide blocking and framing as indicated and as required to support facing materials, fixtures, specialty items, and trim.

1. Provide metal clips for fastening gypsum board or lath at corners and intersections where framing or blocking does not provide a surface for fastening edges of panels. Space clips not more than 16 inches o.c.

NOT FOR BIDDING PURPOSES

H. Sort and select lumber so that natural characteristics will not interfere with installation or with fastening other materials to lumber. Do not use materials with defects that interfere with function of member or pieces that are too small to use with minimum number of joints or optimum joint arrangement.

I. Comply with AWPA M4 for applying field treatment to cut surfaces of preservative-treated lumber.

1. Use inorganic boron for items that are continuously protected from liquid water.
2. Use copper naphthenate for items not continuously protected from liquid water.

J. Provide fire blocking in furred spaces, stud spaces, and other concealed cavities as indicated and as follows:

1. Fire block furred spaces of walls, at each floor level, at ceiling, and at not more than 96 inches o.c. with solid wood blocking or noncombustible materials accurately fitted to close furred spaces.
2. Fire block concealed spaces of wood-framed walls and partitions at each floor level, at ceiling line of top story, and at not more than 96 inches o.c. Where fire blocking is not inherent in framing system used, provide closely fitted solid wood blocks of same width as framing members and 2-inch nominal- thickness.
3. Fire block concealed spaces between floor sleepers with same material as sleepers to limit concealed spaces to not more than 100 sq. ft. and to solidly fill space below partitions.

K. Securely attach rough carpentry work to substrate by anchoring and fastening as indicated, complying with the following:

1. NES NER-272 for power-driven fasteners.
2. Table 2304.9.1, "Fastening Schedule," in ICC's International Building Code.

L. Use steel common nails unless otherwise indicated. Select fasteners of size that will not fully penetrate members where opposite side will be exposed to view or will receive finish materials. Make tight connections between members. Install fasteners without splitting wood. Drive nails snug but do not countersink nail heads unless otherwise indicated.

3.2 WOOD BLOCKING, AND NAILER INSTALLATION

A. Install where indicated and where required for screeding or attaching other work. Form to shapes indicated and cut as required for true line and level of attached work. Coordinate locations with other work involved.

B. Attach items to substrates to support applied loading. Recess bolts and nuts flush with surfaces unless otherwise indicated.

C. Where wood-preservative-treated lumber is installed adjacent to metal decking, install continuous flexible flashing separator between wood and metal decking.

NOT FOR BIDDING PURPOSES

D. Provide permanent grounds of dressed, pressure-preservative-treated, key-beveled lumber not less than 1-1/2 inches wide and of thickness required to bring face of ground to exact thickness of finish material. Remove temporary grounds when no longer required.

3.3 PROTECTION

A. Protect wood that has been treated with inorganic boron (SBX) from weather. If, despite protection, inorganic boron-treated wood becomes wet, apply EPA-registered borate treatment. Apply borate solution by spraying to comply with EPA-registered label.

B. Protect rough carpentry from weather. If, despite protection, rough carpentry becomes wet, apply EPA-registered borate treatment. Apply borate solution by spraying to comply with EPA-registered label.

END OF SECTION 06 10 00

NOT FOR BIDDING PURPOSES

SECTION 06 16 00

SHEATHING

NOT FOR BIDDING PURPOSES

PART 1 -GENERAL

1.1 RELATED DOCUMENTS

A. Drawings and general provisions of the Contract, including General and Supplementary Conditions and Division 01 Specification Sections, apply to this Section.

1.2 SUMMARY

A. Section Includes:

1. Wall sheathing.
2. Roof sheathing.
3. Composite nail base insulated roof sheathing.
4. Parapet sheathing.
5. Sheathing joint and penetration treatment.

1.3 ACTION SUBMITTALS

A. Product Data: For each type of process and factory-fabricated product. Indicate component materials and dimensions and include construction and application details.

1. Include data for fire-retardant treatment from chemical treatment manufacturer and certification by treating plant that treated plywood complies with requirements. Include physical properties of treated materials.
2. For fire-retardant treatments, include physical properties of treated plywood both before and after exposure to elevated temperatures, based on testing by a qualified independent testing agency according to ASTM D 5516.
3. For products receiving waterborne treatment, include statement that moisture content of treated materials was reduced to levels specified before shipment to Project site.

1.5 QUALITY ASSURANCE

A. Testing Agency Qualifications: For testing agency providing classification marking for fireretardant-treated material, an inspection agency acceptable to authorities having jurisdiction that periodically performs inspections to verify that the material bearing the classification marking is representative of the material tested.

1.6 DELIVERY, STORAGE, AND HANDLING

A. Stack panels flat with spacers beneath and between each bundle to provide air circulation. Protect sheathing from weather by covering with waterproof sheeting, securely anchored. Provide for air circulation around stacks and under coverings.

PART 2 -PRODUCTS

2.1 WOOD PANEL PRODUCTS

A. Thickness: As needed to comply with requirements specified, but not less than thickness indicated.

B. Factory mark panels to indicate compliance with applicable standard.

2.2 WALL SHEATHING

A. Plywood Sheathing: DOC PS 1, Exterior, Structural I sheathing.

1. Span Rating: Not less than 16/0 unless indicated otherwise on the drawings.
2. Thickness: As indicated on the drawings

B. Glass-Mat Gypsum Sheathing: ASTM C 1177/1177M.

1. Manufacturers: Subject to compliance with requirements, provide products by one of the following:

a. CertainTeed Corporation.
b. Continental Building Products, LLC.
c. Georgia-Pacific Gypsum LLC.
d. National Gypsum Company.
e. Temple-Inland Building Products by Georgia-Pacific.
f. USG Corporation.

1. Type and Thickness: As indicated on the drawings.
2. Size: 48 by 96 inches for vertical installation.

2.3 ROOF SHEATHING

A. Plywood Sheathing: Exterior, Structural I sheathing.

1. Span Rating: Not less than 16/0 unless indicated otherwise on the drawings.
2. Thickness: As indicated on the drawings.

2.4 FASTENERS

A. General: Provide fasteners of size and type indicated that comply with requirements specified in this article for material and manufacture.

1. For roof, parapet, and wall sheathing, provide fasteners of Type 304 stainless steel.

B. Nails, Brads, and Staples: ASTM F 1667.

C. Power-Driven Fasteners: Fastener systems with an evaluation report acceptable to authorities having jurisdiction, based on ICC-ES AC70.

D. Screws for Fastening Wood Structural Panels to Cold-Formed Metal Framing: ASTM C 954, except with wafer heads and reamer wings, length as recommended by screw manufacturer for material being fastened.

NOT FOR BIDDING PURPOSES

E. Screws for Fastening Gypsum Sheathing to Cold-Formed Metal Framing: Steel drill screws, in length recommended by sheathing manufacturer for thickness of sheathing to be attached.

1. For steel framing less than 0.0329-inch-thick, use screws that comply with ASTM C 1002.
2. For steel framing from 0.033 to 0.112-inch-thick, use screws that comply with ASTM C 954.

F. Screws for Fastening Composite Nail Base Insulated Roof Sheathing to Metal Roof Deck: Steel drill screws, in type and length recommended by sheathing manufacturer for thickness of sheathing to be attached, with organic-polymer or other corrosion-protective coating having a salt-spray resistance of more than 800 hours according to ASTM B 117. Provide washers or plates if recommended by sheathing manufacturer.

2.5 SHEATHING JOINT-AND-PENETRATION TREATMENT MATERIALS

A. Sealant for Glass-Mat Gypsum Sheathing: Silicone emulsion sealant complying with ASTM C 834, compatible with sheathing tape and sheathing and recommended by tape and sheathing manufacturers for use with glass-fiber sheathing tape and for covering exposed fasteners.

1. Sheathing Tape: Self-adhering glass-fiber tape, minimum 2 inches wide, 10 by 10 or 10 by 20 threads/inch, of type recommended by sheathing and tape manufacturers for use with silicone emulsion sealant in sealing joints in glass-mat gypsum sheathing and with a history of successful in-service use.

PART 3 - EXECUTION

3.1 INSTALLATION, GENERAL

A. Do not use materials with defects that impair quality of sheathing or pieces that are too small to use with minimum number of joints or optimum joint arrangement. Arrange joints so that pieces do not span between fewer than three support members.

B. Cut panels at penetrations, edges, and other obstructions of work; fit tightly against abutting construction unless otherwise indicated.

C. Securely attach to substrate by fastening as indicated, complying with the following:

1. Table 2304.9.1, "Fastening Schedule," in the ICC's International Building Code.

D. Use common wire nails unless otherwise indicated. Select fasteners of size that will not fully penetrate members where opposite side will be exposed to view or will receive finish materials. Make tight connections. Install fasteners without splitting wood.

E. Coordinate wall, parapet and roof sheathing installation with flashing and joint-sealant installation so these materials are installed in sequence and manner that prevent exterior moisture from passing through completed assembly.

F. Do not bridge building expansion joints; cut and space edges of panels to match spacing of structural support elements.

G. Coordinate sheathing installation with installation of materials installed over sheathing so sheathing is not exposed to precipitation or left exposed at end of the workday when rain is forecast.

NOT FOR BIDDING PURPOSES

3.2 WOOD STRUCTURAL PANEL INSTALLATION

A. General: Comply with applicable recommendations in APA Form No. E30, "Engineered Wood Construction Guide," for types of structural-use panels and applications indicated.

B. Fastening Methods: Fasten panels as indicated below:

1. Wall and Roof Sheathing:

a. Screw to cold-formed metal framing.
b. Space panels 1/8 inch apart at edges and ends.

3.3 GYPSUM SHEATHING INSTALLATION

A. Comply with GA-253 and with manufacturer's written instructions.

1. Fasten gypsum sheathing to cold-formed metal framing with screws.
2. Install panels with a 3/8-inch gap where non-load-bearing construction abuts structural elements.
3. Install panels with a 1/4-inch gap where they abut masonry or similar materials that might retain moisture, to prevent wicking.

B. Apply fasteners so heads bear tightly against face of sheathing, but do not cut into facing.

C. Horizontal Installation: Install sheathing with V-grooved edge down and tongue edge up. Interlock tongue with groove to bring long edges in contact with edges of adjacent panels without forcing. Abut ends over centers of studs, and stagger end joints of adjacent panels not less than one stud spacing. Attach at perimeter and within field of panel to each stud.

1. Space fasteners approximately 8 inches o.c. and set back a minimum of 3/8 inch from edges and ends of panels.

D. Vertical Installation: Install vertical edges centered over studs. Abut ends and edges with those of adjacent panels. Attach at perimeter and within field of panel to each stud.

1. Space fasteners approximately 8 inches o.c. and set back a minimum of 3/8 inch from edges and ends of panels.

E. Seal sheathing joints according to sheathing manufacturer's written instructions.

1. Apply glass-fiber sheathing tape to glass-mat gypsum sheathing joints and apply and trowel sealant to embed entire face of tape in sealant. Apply sealant to exposed fasteners with a trowel so fasteners are completely covered. Seal other penetrations and openings.

END OF SECTION 06 16 00

NOT FOR BIDDING PURPOSES

NOT FOR BIDDING PURPOSES

SECTION 06 20 23

INTERIOR FINISH CARPENTRY

PART 1 - GENERAL

1.1 RELATED DOCUMENTS

A. Drawings and general provisions of the Contract, including General and Supplementary Conditions and Division 01 Specification Sections, apply to this Section.

1.2 SUMMARY

A. Section Includes:

1. Interior standing and running trim.
2. Solid surface window stools and aprons.
3. Shelving.

1.3 DEFINITIONS

A. Lumber grading agencies, and the abbreviations used to reference them, include the following:

1. NeLMA: Northeastern Lumber Manufacturers' Association.
2. NHLA: National Hardwood Lumber Association.
3. NLGA: National Lumber Grades Authority.
4. SPIB: The Southern Pine Inspection Bureau. WCLIB: West Coast Lumber Inspection Bureau.
5. WWPA: Western Wood Products Association.

B. MDF: Medium-density fiberboard.

C. MDO Plywood: Plywood with a medium-density overlay on the face.

1.4 ACTION SUBMITTALS

A. Product Data: For each type of process and factory-fabricated product. Indicate component materials, dimensions, profiles, textures, and colors and include construction and application details.

1. Include data for fire-retardant treatment from chemical treatment manufacturer and certification by treating plant that treated materials comply with requirements.
2. Include copies of warranties from chemical treatment manufacturers for each type of treatment.

B. Samples for Initial Selection: For each type of paneling indicated.

C. Samples for Verification:

1. For each species and cut of lumber and panel products with non-factory-applied finish, with 1/2 of exposed surface finished, 50 sq. in. for lumber and 8 by 10 inches for panels.

D. Research/Evaluation Reports: Showing that fire-retardant-treated wood complies with building code in effect for Project.

E. Warranty: Special warranty specified in this Section.

1.5 DELIVERY, STORAGE, AND HANDLING

A. Protect materials against weather and contact with damp or wet surfaces. Stack lumber, plywood, and other panels flat with spacers between each bundle to provide air circulation. Provide for air circulation within and around stacks and under temporary coverings.

B. Deliver interior finish carpentry materials only when environmental conditions meet requirements specified for installation areas. If interior finish carpentry materials must be stored in other than installation areas, store only where environmental conditions meet requirements specified for installation areas.

1.6 FIELD CONDITIONS

A. Environmental Limitations: Do not deliver or install interior finish carpentry materials until building is enclosed and weatherproof, wet work in space is completed and nominally dry, and HVAC system is operating and maintaining temperature and relative humidity at occupancy levels during the remainder of the construction period.

B. Do not install finish carpentry materials that are wet, moisture damaged, or mold damaged.

1. Indications that materials are wet or moisture damaged include, but are not limited to, discoloration, sagging, or irregular shape.
2. Indications that materials are mold damaged include, but are not limited to, fuzzy or splotchy surface contamination and discoloration.

PART 2 -PRODUCTS

2.1 MATERIALS, GENERAL

A. Lumber: DOC PS 20 and applicable grading rules of inspection agencies certified by ALSC's Board of Review.

1. Factory mark each piece of lumber with grade stamp of inspection agency indicating grade, species, moisture content at time of surfacing, and mill.
2. For exposed lumber, mark grade stamp on end or back of each piece, or omit grade stamp and provide certificates of grade compliance issued by inspection agency.

B. Softwood Plywood: DOC PS 1.

C. MDF: ANSI A208.2, Grade 130.

NOT FOR BIDDING PURPOSES

2.2 FIRE-RETARDANT-TREATED MATERIALS

A. Lumber: Comply with performance requirements in AWPA C20, Interior Type A. Kiln dry after treatment to a maximum moisture content of 19 percent.

B. Plywood: Comply with performance requirements in AWPA C27, Interior Type A. Kiln dry after treatment to a maximum moisture content of 15 percent.

C. For exposed items indicated to receive a stained or natural finish, use chemical formulations that do not contain colorants and provide materials that do not have marks from spacer sticks on the exposed face.

D. Do not use material that does not comply with requirements for untreated material or is warped or discolored.

E. Identify fire-retardant-treated wood with appropriate classification marking of testing and inspecting agency acceptable to authorities having jurisdiction.

1. For exposed lumber indicated to receive a stained or natural finish, mark end or back of each piece or omit marking and provide certificates of treatment compliance issued by inspection agency.
2. For exposed plywood indicated to receive a stained or natural finish, mark back of each piece.

F. Application: Where indicated at locations for wood framed fire rated assemblies.

2.3 STANDING AND RUNNING TRIM

A. Lumber Trim for Opaque Finish (Painted):

1. Species and Grade: Douglas fir-larch or Douglas fir south, Prime or D finish; NLGA, WCLIB, or WWPA.
2. Finger Jointing: Allowed.
3. Face Surface: Surfaced (smooth)
4. Optional Material: Primed MDF of same actual dimensions as lumber indicated may be used in lieu of lumber.

2.4 SOLID SURFACE WINDOW STOOLS AND APRONS

A. Solid Surface Material: Homogeneous-filled plastic resin complying with ICPA SS-1.

1. Manufacturers: Subject to compliance with requirements, available manufacturers offering products that may be incorporated into the Work include, but are not limited to the following:

   a. E. I. du Pont de Nemours and Company (Corian).

2. Type: Provide Standard type unless Special Purpose type is indicated.
3. Colors and Patterns: Refer to Section 090600.

NOT FOR BIDDING PURPOSES

2.5 SHELVING

A. Closet Shelving: Made from the following material one of the following materials, 3/4 inch thick. Do not use products that contains urea formaldehyde.

1. Softwood Boards: Douglas fir-larch, Douglas fir south, or hem-fir; Superior or C & Btr finish; NLGA, WCLIB, or WWPA; or southern pine, B & B finish; SPIB; kiln dried.

B. Shelf Cleats: 3/4-by-3-1/2-inch boards.

C. Clothes Rods: 1-5/16-inch-diameter, aluminum tubes with end flanges for mounting on shelf cleats.

D. Rod Flanges: Aluminum.

2.6 MISCELLANEOUS MATERIALS

A. Fasteners for Interior Finish Carpentry: Nails, screws, and other anchoring devices of type, size, material, and finish required for application indicated to provide secure attachment, concealed where possible.

B. Glue: Aliphatic-resin, polyurethane, or resorcinol wood glue recommended by manufacturer for general carpentry use.

1. Use wood glue that has a VOC content of 30 g/L or less when calculated according to 40 CFR 59, Subpart D (EPA Method 24).

C. Multipurpose Construction Adhesive: Formulation complying with ASTM D 3498 that is recommended for indicated use by adhesive manufacturer.

1. Use adhesive that has a VOC content of 70 g/L or less when calculated according to 40 CFR 59, Subpart D (EPA Method 24).

2.7 FABRICATION

A. Back out or kerf backs of the following members except those with ends exposed in finished work:

1. Interior standing and running trim except shoe and crown molds.

B. Ease edges of lumber less than 1 inch in nominal thickness to 1/16-inch radius and edges of lumber 1 inch or more in nominal thickness to 1/8-inch radius.

PART 3 - EXECUTION

3.1 EXAMINATION

A. Examine substrates, with Installer present, for compliance with requirements for installation tolerances and other conditions affecting performance.

NOT FOR BIDDING PURPOSES

B. Examine finish carpentry materials before installation. Reject materials that are wet, moisture damaged, and mold damaged.

C. Proceed with installation only after unsatisfactory conditions have been corrected.

3.2 PREPARATION

A. Clean substrates of projections and substances detrimental to application.

B. Before installing interior finish carpentry, condition materials to average prevailing humidity in installation areas for a minimum of 24 hours unless longer conditioning is recommended by manufacturer.

3.3 INSTALLATION, GENERAL

A. Do not use materials that are unsound, warped, improperly treated or finished, inadequately seasoned, or too small to fabricate with proper jointing arrangements.

1. Do not use manufactured units with defective surfaces, sizes, or patterns.

B. Install interior finish carpentry level, plumb, true, and aligned with adjacent materials. Use concealed shims where necessary for alignment.

1. Scribe and cut interior finish carpentry to fit adjoining work. Refinish and seal cuts as recommended by manufacturer.
2. Countersink fasteners, fill surface flush, and sand where face fastening is unavoidable.
3. Install to tolerance of 1/8 inch in 96 inches for level and plumb. Install adjoining interior finish carpentry with 1/32-inch maximum offset for flush installation and 1/16-inch maximum offset for reveal installation.
4. Coordinate interior finish carpentry with materials and systems in or adjacent to it. Provide cutouts for mechanical and electrical items that penetrate interior finish carpentry.

3.4 STANDING AND RUNNING TRIM INSTALLATION

A. Install with minimum number of joints practical, using full-length pieces from maximum lengths of lumber available. Do not use pieces less than 24 inches long, except where necessary. Stagger joints in adjacent and related standing and running trim. Cope at returns and miter at corners to produce tight-fitting joints with full-surface contact throughout length of joint. Use scarf joints for end-to-end joints. Plane backs of casings to provide uniform thickness across joints where necessary for alignment.

1. Match color and grain pattern of trim for transparent finish (stain or clear finish) across joints.
2. Install trim after gypsum board joint finishing operations are completed.
3. Drill pilot holes in hardwood before fastening to prevent splitting. Fasten to prevent movement or warping. Countersink fastener heads on exposed carpentry work and fill holes.

NOT FOR BIDDING PURPOSES

3.5 SOLID SURFACE WINDOW STOOL AND APRON INSTALLATION

A. Install window stools and aprons in accordance with details on Drawings.

3.6 SHELVING INSTALLATION

A. Install shelf cleats by fastening to framing or backing with finish nails or trim screws, set below face and filled. Space fasteners not more than 16 inches o.c.. Use 2 fasteners at each framing member or fastener location for cleats 4 inches nominal in width and wider.

1. Apply a bead of multipurpose construction adhesive to back of shelf cleats right before installing. Remove adhesive that is squeezed out immediately after fastening shelf cleats in place.

B. Cut shelves to neatly fit openings with only enough gap to allow shelves to be removed and reinstalled. Install shelves, fully seated on cleats, brackets, and supports.

1. Fasten shelves to cleats with finish nails or trim screws, set flush.

C. Install rod flanges for rods as indicated. Fasten to shelf cleats, framing members, blocking, or metal backing, or use toggle bolts or hollow wall anchors. Install rods in rod flanges.

3.7 ADJUSTING

A. Replace interior finish carpentry that is damaged or does not comply with requirements. Interior finish carpentry may be repaired or refinished if work complies with requirements and shows no evidence of repair or refinishing. Adjust joinery for uniform appearance.

3.8 CLEANING

A. Clean interior finish carpentry on exposed and semiexposed surfaces. Touch up factory-applied finishes to restore damaged or soiled areas.

3.9 PROTECTION

A. Protect installed products from damage from weather and other causes during remainder of the construction period.

B. Remove and replace finish carpentry materials that are wet, moisture damaged, and mold damaged.

1. Indications that materials are wet or moisture damaged include, but are not limited to, discoloration, sagging, or irregular shape.
2. Indications that materials are mold damaged include, but are not limited to, fuzzy or splotchy surface contamination and discoloration.

END OF SECTION 06 20 23

NOT FOR BIDDING PURPOSES

SECTION 06 40 23

INTERIOR ARCHITECTURAL WOODWORK

NOT FOR BIDDING PURPOSES

PART 1 - GENERAL

1.1 RELATED DOCUMENTS

A. Drawings and general provisions of the Contract, including General and Supplementary Conditions and Division 01 Specification Sections, apply to this Section.

1.2 SUMMARY

A. Section Includes:

1. Stage front, proscenium opening and other locations indicated on the drawings.
2. Shop finishing of interior woodwork.

1.3 ACTION SUBMITTALS

A. Product Data: For high-pressure decorative laminate, adhesive for bonding plastic laminate, cabinet hardware and accessories and finishing materials and processes.

B. Shop Drawings: Show location of each item, dimensioned plans and elevations, large-scale details, attachment devices, and other components.

1. Show details full size.
2. Show locations and sizes of furring, blocking, and hanging strips, including concealed blocking and reinforcement specified in other Sections.
3. Show locations and sizes of cutouts and holes for plumbing fixtures, faucets, soap dispensers and other items installed in architectural woodwork.

C. Samples for Initial Selection:

1. Wood stain.

1.4 INFORMATIONAL SUBMITTALS

A. Qualification Data: For Installer.

B. Product Certificates: For each type of product, signed by product manufacturer.

C. Woodwork Quality Standard Compliance Certificates: AWI Quality Certification Program certificates.

1.5 QUALITY ASSURANCE

A. Installer Qualifications: Fabricator of products including certified participant in AWI's Quality Certification Program.

B. Quality Standard: Unless otherwise indicated, comply with AWI's "Architectural Woodwork Quality Standards" for grades of interior architectural woodwork indicated for construction, finishes, installation, and other requirements.

1. Provide AWI Quality Certification Program labels and certificates indicating that woodwork, including installation, complies with requirements of grades specified.

C. Preinstallation Conference: Conduct conference at Project site to comply with requirements in Division 01 Section "Project Management and Coordination."

1.6 DELIVERY, STORAGE, AND HANDLING

A. Do not deliver woodwork until painting and similar operations that could damage woodwork have been completed in installation areas. If woodwork must be stored in other than installation areas, store only in areas where environmental conditions comply with requirements specified in "Project Conditions" Article.

1.7 PROJECT CONDITIONS

A. Environmental Limitations: Do not deliver or install woodwork until building is enclosed, wet work is complete, and HVAC system is operating and maintaining temperature and relative humidity at occupancy levels during the remainder of the construction period.

B. Environmental Limitations: Do not deliver or install woodwork until building is enclosed, wet work is complete, and HVAC system is operating and maintaining temperature between 60 and 90 deg F and relative humidity between 25 and 55 percent during the remainder of the construction period.

C. Field Measurements: Where woodwork is indicated to fit to other construction, verify dimensions of other construction by field measurements before fabrication, and indicate measurements on Shop Drawings. Coordinate fabrication schedule with construction progress to avoid delaying the Work.

1. Locate concealed framing, blocking, and reinforcements that support woodwork by field measurements before being enclosed, and indicate measurements on Shop Drawings.
2. Established Dimensions: Where field measurements cannot be made without delaying the Work, establish dimensions and proceed with fabricating woodwork without field measurements. Provide allowance for trimming at site, and coordinate construction to ensure that actual dimensions correspond to established dimensions.

1.8 COORDINATION

A. Coordinate sizes and locations of framing, blocking, furring, reinforcements, and other related units of Work specified in other Sections to ensure that interior architectural woodwork can be supported and installed as indicated.

NOT FOR BIDDING PURPOSES

PART 2 - PRODUCTS

2.1 MATERIALS

A. General: Provide materials that comply with requirements of AWI's quality standard for each type of woodwork and quality grade specified, unless otherwise indicated.

B. Wood Products: Comply with the following:

1. Hardboard: AHA A135.4.
2. Medium-Density Fiberboard: ANSI A208.2, Grade MD, made with binder containing no urea formaldehyde.
3. Solid maple, stained.
4. Maple-veneer plywood, stained.

2.2 MISCELLANEOUS MATERIALS

A. Furring, Blocking, Shims, and Hanging Strips: Fire-retardant-treated softwood lumber, kiln dried to less than 15 percent moisture content.

B. Anchors: Select material, type, size, and finish required for each substrate for secure anchorage. Provide nonferrous-metal or hot-dip galvanized anchors and inserts on inside face of exterior walls and elsewhere as required for corrosion resistance. Provide toothed-steel or lead expansion sleeves for drilled-in-place anchors.

C. Adhesives, General: Adhesives shall not contain urea formaldehyde.

D. VOC Limits for Installation Adhesives: Installation adhesives shall comply with the following limits for VOC content when calculated according to 40 CFR 59, Subpart D (EPA Method 24):

1. Wood Glues: 30 g/L.
2. Multipurpose Construction Adhesives: 70 g/L.
3. Contact Adhesive: 250 g/L.

2.3 FABRICATION, GENERAL

A. Interior Woodwork Grade: Unless otherwise indicated, provide Custom-grade interior woodwork complying with referenced quality standard.

B. Wood Moisture Content: Comply with requirements of referenced quality standard for wood moisture content in relation to ambient relative humidity during fabrication and in installation areas.

2.4 SHOP FINISHING

A. Grade: Provide finishes of same grades as items to be finished.

B. General: Finish architectural woodwork at fabrication shop as specified in this Section. Defer only final touchup, cleaning, and polishing until after installation.

NOT FOR BIDDING PURPOSES

PART 3 - EXECUTION

3.1 PREPARATION

A. Before installation, condition woodwork to average prevailing humidity conditions in installation areas.

3.2 INSTALLATION

A. Grade: Install woodwork to comply with requirements for the same grade specified in Part 2 for fabrication of type of woodwork involved.

B. Assemble woodwork and complete fabrication at Project site to comply with requirements for fabrication in Part 2, to extent that it was not completed in the shop.

C. Install woodwork level, plumb, true, and straight. Shim as required with concealed shims. Install level and plumb (including tops) to a tolerance of 1/8 inch in 96 inches.

D. Scribe and cut woodwork to fit adjoining work, refinish cut surfaces, and repair damaged finish at cuts.

E. Anchor woodwork to anchors or blocking built in or directly attached to substrates. Secure with countersunk, concealed fasteners and blind nailing as required for complete installation. Use fine finishing nails or finishing screws for exposed fastening, countersunk and filled flush with woodwork and matching final finish if transparent finish is indicated.

F. Touch up finishing work specified in this Section after installation of woodwork. Fill nail holes with matching filler where exposed.

3.3 ADJUSTING AND CLEANING

A. Repair damaged and defective woodwork, where possible, to eliminate functional and visual defects; where not possible to repair, replace woodwork. Adjust joinery for uniform appearance.

B. Clean woodwork on exposed and semiexposed surfaces. Touch up shop-applied finishes to restore damaged or soiled areas.

END OF SECTION 06 40 23

NOT FOR BIDDING PURPOSES

SECTION 07 19 00

WATER REPELLENTS

NOT FOR BIDDING PURPOSES

PART 1 - GENERAL

1.1 RELATED DOCUMENTS

A. Drawings and general provisions of the Contract, including General and Supplementary Conditions and Division 01 Specification Sections, apply to this Section.

1.2 SUMMARY

A. Section includes penetrating water-repellent treatments for the following vertical and horizontal surfaces:

1. Cast-in-place concrete.
2. Precast concrete.
3. Cast stone.
4. Concrete unit masonry.

B. Related Sections:

1. Division 03 Section "Maintenance of Cast-in-Place Concrete" for penetrating polymer sealers for exterior traffic surfaces.
2. Division 04 Section "Unit Masonry" for integral water-repellent admixture for unit masonry assemblies.

1.3 PERFORMANCE REQUIREMENTS

A. General Performance: Water repellents shall meet performance requirements indicated without failure due to defective manufacture, fabrication, or installation.

1. Water Repellents: Comply with performance requirements specified, as determined by manufacturer's standard substrate assemblies representing those indicated for this Project.

B. Water Absorption: Minimum 90 percent reduction of water absorption after 24 hours in comparison of treated and untreated specimens.

1. Cast-in Place Concrete: ASTM C 642.
2. Precast Concrete: ASTM C 642.
3. Cast Stone: ASTM C 1195.
4. Concrete Masonry Units: ASTM C 140.
5. Clay Brick: ASTM C 67.

C. Water-Vapor Transmission: Comply with one or both of the following:

1. Maximum 10 percent reduction in rate of vapor transmission in comparison of treated and untreated specimens, according to ASTM E 96/E 96M.
2. Minimum 80 percent water-vapor transmission in comparison of treated and untreated specimens, according to ASTM D 1653.

D. Water Penetration and Leakage through Masonry: Minimum 90 percent reduction in leakage rate in comparison of treated and untreated specimens, according to ASTM E 514.

E. Durability: Maximum 5 percent loss of water-repellent properties after 2500 hours of weathering according to ASTM G 154 in comparison to water-repellent-treated specimens before weathering.

1.4 PRECONSTRUCTION TESTING

1.5 SUBMITTALS

A. Product Data: For each type of product indicated.

1. Include manufacturer's printed statement of VOC content.

2. Include manufacturer's recommended number of coats for each type of substrate and spreading rate for each separate coat.

1.6 QUALITY ASSURANCE

A. Applicator Qualifications: An employer of workers trained and approved by manufacturer.

B. Mockups: Apply water repellent to each type of substrate required.

1.7 PROJECT CONDITIONS

A. Limitations: Proceed with application only when the following existing and forecasted weather and substrate conditions permit water repellents to be applied according to manufacturers' written instructions and warranty requirements:

1. Concrete surfaces and mortar have cured for not less than 28 days.
2. Building has been closed in for not less than 30 days before treating wall assemblies.
3. Ambient temperature is above 40 deg F (4.4 deg C) and below 100 deg F (37.8 deg C) and will remain so for 24 hours.
4. Substrate is not frozen and substrate-surface temperature is above 40 deg F (4.4 deg C) and below 100 deg F (37.8 deg C).
5. Rain or snow is not predicted within 24 hours.
6. Not less than 24 hours have passed since surfaces were last wet.
7. Windy conditions do not exist that might cause water repellent to be blown onto vegetation or surfaces not intended to be treated.

NOT FOR BIDDING PURPOSES

1.8 WARRANTY

A. Special Warranty: Manufacturer's standard form in which manufacturer and Applicator agree(s) to repair or replace materials that fail to maintain water repellency specified in "Performance Requirements" Article within specified warranty period.

1. Warranty Period: 10 years from date of Substantial Completion.

PART 2 - PRODUCTS

2.1 PENETRATING WATER REPELLENTS

A. Siloxane, Penetrating Water Repellent: Clear, containing [10] <Insert number> percent or more solids of oligomerous alkylalkoxysiloxanes; with alcohol, ethanol, mineral spirits, water, or other proprietary solvent carrier; and with 400 g/L or less of VOCs.

B. Silane/Siloxane-Blend, Penetrating Water Repellent: Clear, silane and siloxane blend with 400 g/L or less of VOCs.

PART 3 - EXECUTION

3.1 EXAMINATION

A. Examine substrates, areas, and conditions, with Applicator present, for compliance with requirements and conditions affecting performance of the Work.

1. Verify that surfaces are clean and dry according to water-repellent manufacturer's requirements. Check moisture content in [three] <Insert number> representative locations by method recommended by manufacturer.
2. Inspect for previously applied treatments that may inhibit penetration or performance of water repellents.
3. Verify that there is no efflorescence or other removable residues that would be trapped beneath the application of water repellent.
4. Verify that required repairs are complete, cured, and dry before applying water repellent.

B. Test pH level according to water-repellent manufacturer's written instructions to ensure chemical bond to silica-containing or siliceous minerals.

C. Proceed with installation only after unsatisfactory conditions have been corrected.

3.2 PREPARATION

A. Cleaning: Before application of water repellent, clean substrate of substances that could impair penetration or performance of product according to water-repellent manufacturer's written instructions and as follows:

NOT FOR BIDDING PURPOSES

1. Cast-in-Place Concrete, Precast Concrete, Cast Stone, and Concrete Unit Masonry: Remove oil, curing compounds, laitance, and other substances that inhibit penetration or performance of water repellents.

B. Protect adjoining work, including mortar and sealant bond surfaces, from spillage or blow-over of water repellent. Cover adjoining and nearby surfaces of aluminum and glass if there is the possibility of water repellent being deposited on surfaces. Cover live vegetation.

C. Coordination with Mortar Joints: Do not apply water repellent until pointing mortar for joints adjacent to surfaces receiving water-repellent treatment has been installed and cured.

3.3 APPLICATION

A. Manufacturer's Field Service: Engage a factory-authorized service representative to inspect the substrate before application of water repellent and to instruct Applicator on the product and application method to be used.

B. Apply a heavy-saturation coating of water repellent, on surfaces indicated for treatment, using 15 psi- (103 kPa-) pressure spray with a fan-type spray nozzle to the point of saturation. Apply coating in dual passes of uniform, overlapping strokes. Remove excess material; do not allow material to puddle beyond saturation. Comply with manufacturer's written instructions for application procedure unless otherwise indicated.

1. Precast Concrete and Cast Stone: At Contractor's option, first application of water repellent on units may be completed before installing them. Mask mortar and sealant bond surfaces to prevent water repellent from migrating onto joint surfaces.

3.4 CLEANING

A. Immediately clean water repellent from adjoining surfaces and surfaces soiled or damaged by water-repellent application as work progresses. Correct damage to work of other trades caused by water-repellent application, as approved by Architect.

B. Comply with manufacturer's written cleaning instructions.

END OF SECTION 07 19 00

NOT FOR BIDDING PURPOSES

NOT FOR BIDDING PURPOSES

SECTION 07 21 00

THERMAL INSULATION

PART 1 - GENERAL

1.1 RELATED DOCUMENTS

A. Drawings and general provisions of the Contract, including General and Supplementary Conditions and Division 01 Specification Sections, apply to this Section.

1.2 SUMMARY

A. Section Includes:

1. Extruded polystyrene foam-plastic board.

1.3 ACTION SUBMITTALS

A. Product Data: For each type of product.

1.4 INFORMATIONAL SUBMITTALS

A. Product Test Reports: For each product, for tests performed by a qualified testing agency.

B. Evaluation Reports: For foam-plastic insulation, from ICC-ES.

1.5 DELIVERY, STORAGE, AND HANDLING

A. Protect insulation materials from physical damage and from deterioration due to moisture, soiling, and other sources. Store inside and in a dry location. Comply with manufacturer's written instructions for handling, storing, and protecting during installation.

B. Protect foam-plastic board insulation as follows:

1. Do not expose to sunlight except to necessary extent for period of installation and concealment.
2. Protect against ignition at all times. Do not deliver foam-plastic board materials to Project site until just before installation time.
3. Quickly complete installation and concealment of foam-plastic board insulation in each area of construction.

PART 2 - PRODUCTS

2.1 EXTRUDED POLYSTYRENE FOAM-PLASTIC BOARD

A. Extruded polystyrene boards in this article are also called "XPS boards." Roman numeral designators in ASTM C 578 are assigned in a fixed random sequence, and their numeric order does not reflect

increasing strength or other characteristics.

B. Extruded Polystyrene Board, Type IV: ASTM C 578, Type IV, 25-psi minimum compressive strength; unfaced; maximum flame-spread and smoke-developed indexes of 25 and 450, respectively, per ASTM E 84.

1. Manufacturers: Subject to compliance with requirements, provide products by one of the following:

a. DiversiFoam Products.
b. Dow Chemical Company (The).

2. Fire Propagation Characteristics: Passes NFPA 285 testing as part of an approved assembly.
3. Thermal Resistance: Minimum R value of 5.0 per inch.

2.2 ACCESSORIES

A. Insulation for Miscellaneous Voids:

1. Glass-Fiber Insulation: ASTM C 764, Type II, loose fill; with maximum flame-spread and smoke-developed indexes of 5, per ASTM E 84.
2. Spray Polyurethane Foam Insulation: ASTM C 1029, Type II, closed cell, with maximum flame-spread and smoke-developed indexes of 75 and 450, respectively, per ASTM E 84.

B. Adhesive for Bonding Insulation: Product compatible with insulation and air and water barrier materials, and with demonstrated capability to bond insulation securely to substrates without damaging insulation and substrates.

PART 3 - EXECUTION

3.1 PREPARATION

A. Clean substrates of substances that are harmful to insulation, including removing projections capable of puncturing insulation or vapor retarders, or that interfere with insulation attachment.

3.2 INSTALLATION, GENERAL

A. Comply with insulation manufacturer's written instructions applicable to products and applications.

B. Install insulation that is undamaged, dry, and unsoiled and that has not been left exposed to ice, rain, or snow at any time.

C. Extend insulation to envelop entire area to be insulated. Fit tightly around obstructions and fill voids with insulation. Remove projections that interfere with placement.

D. Provide sizes to fit applications and selected from manufacturer's standard thicknesses, widths, and lengths. Apply single layer of insulation units unless multiple layers are otherwise shown or required to make up total thickness or to achieve R-value.

3.3 INSTALLATION OF SLAB INSULATION

A. On vertical slab edge and foundation surfaces, set insulation units using manufacturer's recommended

NOT FOR BIDDING PURPOSES

adhesive according to manufacturer's written instructions.

1. If not otherwise indicated, extend insulation a minimum of 24 inches below exterior grade line unless indicated otherwise.

B. On horizontal surfaces, loosely lay insulation units according to manufacturer's written instructions. Stagger end joints and tightly abut insulation units.

1. If not otherwise indicated, extend insulation a minimum of 24 inches in from exterior walls unless indicated otherwise.

3.4 INSTALLATION OF FOUNDATION WALL INSULATION

A. Butt panels together for tight fit.

B. Adhesive Installation: Install with adhesive or press into tacky waterproofing or dampproofing according to manufacturer's written instructions.

3.5 INSTALLATION OF INSULATION IN FRAMED CONSTRUCTION

A. Exterior Walls: Spray applied foam insulation refer to Section 072119 "Foamed-In-Place Insulation."

B. Miscellaneous Voids: Install insulation in miscellaneous voids and cavity spaces where required to prevent gaps in insulation using the following materials:

1. Glass-Fiber Insulation: Compact to approximately 40 percent of normal maximum volume equaling a density of approximately 2.5 lb/cu. ft..
2. Spray Polyurethane Insulation: Apply according to manufacturer's written instructions.

3.6 PROTECTION

A. Protect installed insulation from damage due to harmful weather exposures, physical abuse, and other causes. Provide temporary coverings or enclosures where insulation is subject to abuse and cannot be concealed and protected by permanent construction immediately after installation.

END OF SECTION 07 21 00

NOT FOR BIDDING PURPOSES

THIS PAGE INTENTIONALLY LEFT BLANK

NOT FOR BIDDING PURPOSES

NOT FOR BIDDING PURPOSES

SECTION 07 21 19

FOAMED-IN-PLACE INSULATION

PART 1 - GENERAL

1.1 RELATED DOCUMENTS

A. Drawings and general provisions of the Contract, including General and Supplementary Conditions and Division 01 Specification Sections, apply to this Section.

1.2 SUMMARY

A. Section Includes:

1. Closed-cell spray polyurethane foam.

1.3 ACTION SUBMITTALS

A. Product Data: For each type of product.

1.4 INFORMATIONAL SUBMITTALS

A. Qualification Data: For Installer.

B. Product Test Reports: For each product, for tests performed by a qualified testing agency.

C. Evaluation Reports: For spray-applied polyurethane foam-plastic insulation, from ICC-ES.

1.5 QUALITY ASSURANCE

A. Installer Qualifications: An authorized representative who is trained and approved by manufacturer.

PART 2 - PRODUCTS

2.1 CLOSED-CELL SPRAY POLYURETHANE FOAM

A. Closed-Cell Spray Polyurethane Foam: ASTM C 1029, Type II, minimum density of 2.0 lb/cu. ft. and minimum aged R-value at 1-inch thickness of 7.0 deg F x h x sq. ft./Btu at 75 deg F.

1. Manufacturers: Subject to compliance with requirements, available manufacturers offering products that may be incorporated into the Work include, but are not limited to the following:

a. Accella Polyurethane Systems; BaySeal CCX.
b. BASF Corp. -Construction Chemicals.
c. CertainTeed Corporation.
d. Foam-Tech/Building Envelope Solutions, Inc.
e. Henry Company.

f. Icynene Inc.
g. NCFI Polyurethanes; a division of Barnhardt Manufacturing Company.

2. Surface-Burning Characteristics: Comply with ASTM E 84; testing by a qualified testing agency. Identify products with appropriate markings of applicable testing agency.

   a. Flame-Spread Index: 25 or less.
   b. Smoke-Developed Index: 350 or less.

3. Fire Propagation Characteristics: Passes NFPA 285 testing as part of an approved assembly.

4. Formaldehyde free and CFC free.

2.2 MISCELLANEOUS MATERIALS

A. Primer: Material recommended by insulation manufacturer where required for adhesion of insulation to substrates.

PART 3 - EXECUTION

3.1 PREPARATION

A. Verify that substrates are clean, dry, and free of substances that are harmful to insulation.

B. Priming: Prime substrates where recommended by insulation manufacturer. Apply primer to comply with insulation manufacturer's written instructions. Confine primers to areas to be insulated; do not allow spillage or migration onto adjoining surfaces.

3.2 INSTALLATION

A. Comply with insulation manufacturer's written instructions applicable to products and applications.

B. Spray insulation to envelop entire area to be insulated and fill voids.

C. Apply in multiple passes to not exceed maximum thicknesses recommended by manufacturer. Do not spray into rising foam.

D. Framed Construction: Install into cavities formed by framing members to achieve thickness indicated on Drawings.

E. Cavity Walls: Install into cavities to thickness indicated on Drawings.

F. Miscellaneous Voids: Apply according to manufacturer's written instructions.

G. Provide reinforcing mesh to transition between substrate materials and around windows.

H. Apply insulation to uniform thickness of 3 inches, unless shown otherwise on Drawings.

3.3 PROTECTION

A. Protect installed insulation from damage due to harmful weather exposures, physical abuse, and other causes.

END OF SECTION 07 21 19

NOT FOR BIDDING PURPOSES

NOT FOR BIDDING PURPOSES

SECTION 07 22 00

VENTILATED NAILBASE INSULATION PANELS

PART 1 - GENERAL

1.1 SECTION INCLUDES

A. Section includes ventilated nailbase insulation panel system.

1.2 RELATED SECTIONS

A. Section 07310 - Roof Shingles.

1.3 REFERENCES

A. ASTM C 209 – Methods of Testing Insulating Board, Structural and Decorative.

B. ASTM C 1289 – Specifications for Faced Rigid Cellular Polyisocyanurate Thermal Insulating Board.

C. ASTM D 1621 – Test Methods for Compressive Properties of Rigid Cellular Plastics.

D. ASTM D 2126 - Test Method for Response of Rigid Cellular Plastics to Thermal and Humid Aging.

E. ASTM E 84 – Surface Burning Characteristics of Building Materials.

F. ASTM E 96 - Test Method for Water Vapor Transmission of Materials.

G. UL 1256 - Fire Test of Roof Deck Constructions.

H. PS2-92 - Performance Standard for Wood-based Structural-use Panels.

I. Miami Dade Product Control – Notice of Acceptance NOA No. 14-0505.08

1.4 SYSTEM DESCRIPTION

A. Physical properties (Foam Core):
1. Blowing Agent: Zero ODP, 3rd generation
2. Compressive Strength: ASTM D 1621 and ASTM C 1289, Type V, Class 1, 20 psi (138 kPa) minimum for Grade 2 and 25 psi (172 kPa) minimum for Grade 3.
3. Also Available ASTM C 1289, Type V, Class 2, 20 psi (138 kPa) minimum for Grade 2 and 25 psi (172 kPa) minimum for Grade 3.
4. Dimensional Stability: ASTM D 2126, 2 percent linear change (7 days).
5. Moisture Vapor Transmission: ASTM E 96, < 1 perm ((57.5ng/(Pa•s•m2)).

6. Water Absorption: ASTM C 209, < 1 percent by volume.
7. Service Temperature: Minus 100 degrees to 250 degrees F (minus 73 degrees C to 122 degrees C).
8. Foam core flame spread index of 75 or less and smoke developed of 450 or less when tested in accordance with ASTM E 84.

B. Foam Core R Values: Based on LTTR (Long Term Thermal Resistance) in accordance with ASTM C 1289.

1.5 SUBMITTALS

A. Submit under provisions of Section 01300.

B. Product Data: Manufacturer's data sheets on nailbase insulation panels and fasteners to be used, including:
1. Preparation instructions and recommendations.
2. Storage and handling requirements and recommendations.
3. Installation methods.

C. Verification Samples: For each finish product specified, two samples, representing actual product.
1. Submit 6 by 6 inch (152 mm by 152 mm) samples of each board type required.
2. Submit samples of each fastener type required.

D. Manufacturer's Certificate: Certify ventilated nailbase insulation panels will conform to specified performance requirements.

1.6 QUALITY ASSURANCE

A. Manufacturer Qualifications: Manufacturer shall be a company that regularly manufactures polyisocyanurate insulation panels and fully assembles ventilated nailbase insulation in-house with no outside fabrication.

1.7 DELIVERY, STORAGE, AND HANDLING

A. Store products in accordance with the manufacturer recommendations.

B. Store product on a solid flat foundation and elevate a minimum of 2” above the finished surface.

C. Slit the bundle packaging vertically down the center of the two short sides and cover with a waterproof tarpaulin

D. Protect insulation from open flame and keep dry at all times.

1.8 PROJECT CONDITIONS

A. Install only as much insulation as can be covered the same day by a completed roof covering material.

PART 2 - PRODUCTS

NOT FOR BIDDING PURPOSES

2.1 MANUFACTURERS

A. Basis-of-Design Product:
1. Manufacturer: Hunter Panels (888) 746-1114 www.hunterpanels.com.
2. Product: Cool-Vent

or approved product from one of the following:
a. Atlas Roofing Corporation – ACFoam CrossVent
b. Johns Manville – Vented Nailboard

B. Requests for substitutions will be considered in accordance with provisions of Section 01600.

2.2 PANEL CONSTRUCTION

A. Panels shall consist of a top layer of APA/TECO rated Oriented Strand Board (OSB) or Plywood, a middle layer of vented air space consisting of 1 inch (25.4 mm) thick wood spacers and a bottom layer of fiber-reinforced facers (GRF) polyisocyanurate foam insulation. Also available with coated glass facers (CGF) polyisocyanurate foam insulation.
1. Polyisocyanurate foam insulation shall conform to ASTM C 1289, Type V.
2. Compressive Strength: 20 pounds per square inch (138 kPa) Grade 2.
3. Compressive Strength: 25 pounds per square inch (172 kPa) Grade 3
4. Multiple top layer substrate shall conform to PS2 and shall be as follows:
a. CDX Plywood:
1) Type:
(a) Standard sheathing grade.
2) Thickness:
(a) 5/8 inch (15.9 mm).

B. Vented airspace shall be a minimum of 1 inch (25 mm) in depth and provide not less than 92 percent overall free air movement through the panel. It shall have 55 percent or greater lateral free air movement. Panels shall be manufactured to provide cross directional ventilation without additional material being incorporated into the construction. Provide an airspace of:
1. 2 inch (51 mm) air space.

C. Panel with wood nailable surface as specified shall be factory rabbetted 1/8 inch (3.2 mm) on all sides to prove for expansion of substrate.

2.3 PANEL TYPES

A. Cool-Vent Panels: 4 feet by 8 feet (1220 mm by 2440 mm) with multiple top layer surface of 5/8 inch (15.9 mm) OSB or CDX plywood and a vented airspace of 2 inches (51 mm). Panel shall have an overall thickness, R-value, and flute spanability as follows:
1. Thickness 3.6 inches (91 mm), R Value 5.7, flute spanability 2-5/8 inches (67 mm).

2.4 PANEL FASTENERS

A. Fasteners shall be FM Approved Hunter Panel SIP/SD Panel Fasteners for steel deck application. Fasteners have a 3/16 inch (5 mm) shank, and are corrosion resistant with

NOT FOR BIDDING PURPOSES

oversized heads. Length of fasteners shall be as recommended by Hunter Panels. Use of 2 inch (51 mm) round plates are not required. See the Hunter Panels application guide for instructions.

1. Fasteners shall penetrate the top flute of steel deck a minimum of 1 inch (25 mm).
2. Penetration of fastener into bottom flute is not acceptable.

B. Fasteners shall be FM Approved Hunter Panel SIP/WD Panel fasteners for plywood deck application. Fasteners have a 3/16 inch (5 mm) shank, and are corrosion resistant with oversized heads. Length of fasteners shall be as recommended by Hunter Panels. Use of 2 inch (51 mm) round plates are not required. See the Hunter Panels application guide for instructions.

1. Fasteners shall penetrate the plywood deck a minimum of 1 inch (25 mm).

PART 3 - EXECUTION

3.1 EXAMINATION

A. Do not begin installation until structural deck has been properly prepared.

B. Verify deck, adjacent materials, and structural backing is dry and ready to receive insulation.

C. Verify deck surface is flat, free of fins or protrusions and irregularities.

D. If deck preparation is the responsibility of another installer, notify Architect of unsatisfactory preparation before proceeding.

3.2 PREPARATION

A. Apply vapor barrier and or retarder, as specified by the Architect or required by the local building code, to decking prior to the installation.

B. Apply proper ridge and soffit vents to create an effective eave to ridge venting system in conjunction with Cool-Vent.

3.3 INSTALLATION

A. Install panels with the wood (OSB/Plywood) side face up. Place panels in the manufacturers recommended pattern. Only factory assembled panels will be accepted. Fasten panels through the top nailable surface and also through the wood block panel spacers using Hunter Panels approved threaded fasteners.

B. For multiple layered installations, install the base layer of panels loose-laid, and stagger the joints of subsequent layers in accordance with good roofing practice.

C. For roof slopes up to 7/12 pitch, 7 inches (178 mm) rise in 12 inches (304 mm), the minimum number of fasteners shall be 18 per 4 foot by 8 foot (1220 mm by 2440 mm) panel.

D. For roof slopes over 7/12 pitch, 7 inches (178 mm) rise in 12 inches (304 mm), the minimum number of fasteners shall be 24 per 4 foot by 8 foot (1220 mm by 2440 mm) panel.

3.4 PROTECTION

NOT FOR BIDDING PURPOSES

A. Protect installed products until completion of project.

B. Cover the top and edges of unfinished roof panel work to protect it from the weather and to prevent accumulation of water in the cores of the panels.

C. Do not leave panels exposed to moisture. Wet panels shall be removed or allowed to completely dry prior to application of vapor barrier and/or roof covering.

D. Apply only enough insulation panels per day that can be covered the same day by a completed roof covering material.

END OF SECTION 07 22 00

NOT FOR BIDDING PURPOSES

THIS PAGE INTENTIONALLY LEFT BLANK

NOT FOR BIDDING PURPOSES

SECTION 07 31 13

ASPHALT SHINGLES

NOT FOR BIDDING PURPOSES

PART 1 - GENERAL

1.1 RELATED DOCUMENTS

A. Drawings and general provisions of the Contract, including General and Supplementary Conditions and Division 01 Specification Sections, apply to this Section.

1.2 SUMMARY

A. Section Includes:

1. Asphalt shingles.
2. Underlayment.
3. Ridge vents.
4. Metal flashing and trim.
5. Snow guards.

1.3 DEFINITION

A. Roofing Terminology: See ASTM D 1079 and glossary of NRCA's "The NRCA Roofing and Waterproofing Manual" for definitions of terms related to roofing work in this Section.

1.4 PREINSTALLATION MEETINGS

A. Preinstallation Conference: Conduct conference at Project site.

1.5 ACTION SUBMITTALS

A. Product Data: For each type of product indicated.

B. Samples for Initial Selection: For each type of asphalt shingle indicated.

1. Include similar Samples of accessories involving color selection.

C. Samples for Verification: For the following products, of sizes indicated:

1. Asphalt Shingles: Full size.
2. Underlayment: 12 by 12 inches.
3. Ice dam protection: 12 by 12 inches.

1.6 INFORMATIONAL SUBMITTALS

A. Qualification Data: For Installer.

B. Product Test Reports: For each type of asphalt shingle and underlayment product indicated, for tests performed by manufacturer and witnessed by a qualified testing agency.

C. Evaluation Reports: For synthetic underlayment, from ICC-ES or other testing and inspecting agency acceptable to authorities having jurisdiction, indicating that product is suitable for intended use under applicable building codes.

D. Sample Warranty: For manufacturer's warranty.

1.7 CLOSEOUT SUBMITTALS

A. Maintenance Data: For asphalt shingles to include in maintenance manuals.

1.8 MAINTENANCE MATERIAL SUBMITTALS

A. Furnish extra materials that match products installed and that are packaged with protective covering for storage and identified with labels describing contents.

1. Asphalt Shingles: 100 sq. ft. of each type, in unbroken bundles.

1.9 QUALITY ASSURANCE

A. Installer Qualifications: An authorized representative who is trained and approved by manufacturer.

1.10 DELIVERY, STORAGE, AND HANDLING

A. Store roofing materials in a dry, well-ventilated location protected from weather, sunlight, and moisture according to manufacturer's written instructions.

B. Store underlayment rolls on end on pallets or other raised surfaces. Do not double stack rolls.

C. Protect unused roofing materials from weather, sunlight, and moisture when left overnight or when roofing work is not in progress.

D. Handle, store, and place roofing materials in a manner to prevent damage to roof deck or structural supporting members.

1.11 FIELD CONDITIONS

A. Environmental Limitations: Install self-adhering sheet underlayment within the range of ambient and substrate temperatures recommended in writing by manufacturer.

1.12 WARRANTY

A. Manufacturer's Warranty: Manufacturer agrees to repair or replace asphalt shingles that fail within specified warranty period.

1. Failures include, but are not limited to, the following:

NOT FOR BIDDING PURPOSES

a. Manufacturing defects.

2. Material Warranty Period: 40 years from date of Substantial Completion, prorated, with first 15 years nonprorated.
3. Algae-Discoloration Warranty Period: Asphalt shingles will not discolor 15 years from date of Substantial Completion.
4. Workmanship Warranty Period: Two years from date of Substantial Completion.

PART 2 - PRODUCTS

2.1 PERFORMANCE REQUIREMENTS

A. Exterior Fire-Test Exposure: Provide asphalt shingles and related roofing materials identical to those of assemblies tested for Class A fire resistance according to ASTM E 108 or UL 790 by Underwriters Laboratories or another testing and inspecting agency acceptable to authorities having jurisdiction. Identify products with appropriate markings of applicable testing agency.

2.2 GLASS-FIBER-REINFORCED ASPHALT SHINGLES

A. Basis-of-Design Product:
1. Manufacturer: CertainTeed Corporation
2. Description: Two-piece laminated fiberglass-based shingle
3. Name: Landmark Pro
4. Weight: 250lbs/square
5. Color: As selected by Architect from Manufacturer's Max Def Colors.

B. Hip and Ridge Shingles: Manufacturer's standard units to match asphalt shingles.

2.3 UNDERLAYMENT MATERIALS

A. Felt: ASTM D 4869, Type II, asphalt-saturated organic felts, nonperforated.

B. Self-Adhering Sheet Underlayment, Polyethylene Faced: ASTM D 1970, minimum of 40-milthick, slip-resisting, polyethylene-film-reinforced top surface laminated to SBS-modified asphalt adhesive, with release paper backing; cold applied.

1. Manufacturers: Subject to compliance with requirements, provide products by one of the following:

a. CertainTeed Corporaiton; WinterGuard.
b. GAF Shinglemate.
c. Grace, W. R. & Co. -Conn.; Ice & Water Shield.

NOT FOR BIDDING PURPOSES

2.4 RIDGE VENTS

A. Rigid Ridge Vent: Manufacturer's standard, rigid section high-density polypropylene or other UV-stabilized plastic ridge vent with nonwoven geotextile filter strips; for use under ridge shingles.

1. Basis of Design Product: Subject to compliance with requirements, provide Metal Era; High Perf Ridge Vent, or comparable product by one of the following:

a. Air Vent, Inc.; a Gibraltar Industries company.
b. Cor-A-Vent, Inc.
c. GAF Materials Corp.

2.5 SNOW GUARDS

A. Basis of Design Product: Subject to compliance with requirements, provide the following:

1. Berger Building Products; SGS100 Pro 100 Series Heavy Duty Stainless Steel Snow Guards.
2. Approved equal.

2.6 ACCESSORIES

A. Asphalt Roofing Cement: ASTM D 4586, Type II, asbestos free.

B. Roofing Nails: ASTM F 1667; aluminum, stainless-steel, copper, or hot-dip galvanized-steel wire shingle nails, minimum 0.120-inch-diameter, barbed or smooth shank, sharp-pointed, with a minimum 3/8-inch-diameter flat head and of sufficient length to penetrate 3/4 inch into solid wood decking or extend at least 1/8 inch through OSB or plywood sheathing.

1. Where nails are in contact with metal flashing, use nails made from same metal as flashing.

C. Felt Underlayment Nails: Aluminum, stainless-steel, or hot-dip galvanized-steel wire with low-profile capped heads or disc caps, 1-inch minimum diameter.

2.7 METAL FLASHING AND TRIM

A. General: Comply with requirements in Section 076200 "Sheet Metal Flashing and Trim."

B. Fabricate sheet metal flashing and trim to comply with recommendations in SMACNA's "Architectural Sheet Metal Manual" that apply to design, dimensions, metal, and other characteristics of the item.

1. Step Flashings: Fabricate with a headlap of 2 inches and a minimum extension of 4 inches over the underlying asphalt shingle and up the vertical surface.
2. Open-Valley Flashings: Fabricate in lengths not exceeding 10 feet with 1-inch-high, inverted-V profile at center of valley and equal flange widths of 12 inches.
3. Drip Edges: Fabricate in lengths not exceeding 10 feet with 2-inch roof-deck flange and 1-1/2-inch fascia flange with 3/8-inch drip at lower edge.

C. Vent Pipe Flashings: ASTM B 749, Type L51121, at least 1/16 inch thick. Provide lead sleeve sized to slip over and turn down into pipe, soldered to skirt at slope of roof, and extending at least 4 inches from pipe onto roof.
1. Kynar Finish Color: As selected by Architect.

NOT FOR BIDDING PURPOSES

PART 3 - EXECUTION

3.1 EXAMINATION

A. Examine substrates, areas, and conditions, with Installer present, for compliance with requirements for installation tolerances and other conditions affecting performance of the Work.

1. Examine roof sheathing to verify that sheathing joints are supported by framing and blocking or metal clips and that installation is within flatness tolerances.
2. Verify that substrate is sound, dry, smooth, clean, sloped for drainage, and completely anchored; and that provisions have been made for flashings and penetrations through asphalt shingles.

B. Prepare written report, endorsed by Installer, listing conditions detrimental to performance of the Work.

C. Proceed with installation only after unsatisfactory conditions have been corrected.

3.2 UNDERLAYMENT INSTALLATION

A. General: Comply with underlayment manufacturer's written installation instructions applicable to products and applications indicated unless more stringent requirements apply.

B. Single-Layer Felt Underlayment: Install on roof deck parallel with and starting at the eaves. Lap sides a minimum of 2 inches over underlying course. Lap ends a minimum of 4 inches. Stagger end laps between succeeding courses at least 72 inches.

1. Install felt underlayment on roof deck not covered by self-adhering sheet underlayment. Lap sides of felt over self-adhering sheet underlayment not less than 3 inches in direction to shed water. Lap ends of felt not less than 6 inches over self-adhering sheet underlayment.
2. Install fasteners at no more than 36-inch o.c.

C. Self-Adhering Sheet Underlayment: Install, wrinkle free, on roof deck. Comply with low-temperature installation restrictions of underlayment manufacturer if applicable. Install at locations indicated on Drawings, lapped in direction to shed water. Lap sides not less than 6 inches. Lap ends not less than 6 inches staggered 24 inches between courses. Roll laps with roller. Cover underlayment within seven days.

D. Concealed Valley Lining: For woven valleys. Comply with NRCA's "NRCA Guidelines for Asphalt Shingle Roof Systems." Install underlayment centered in valley and fastened to roof deck.

1. Lap roof-deck underlayment over valley underlayment at least 6 inches.
2. Install a full-width sheet of synthetic underlayment centered in valley. Lap ends of strips at least 12 inches in direction to shed water, and seal with asphalt roofing cement. Fasten to roof deck.

3.3 METAL FLASHING INSTALLATION

A. General: Install metal flashings and other sheet metal to comply with requirements in Section 076200 "Sheet Metal Flashing and Trim."

1. Install metal flashings according to recommendations in ARMA's "Residential Asphalt Roofing Manual" and NRCA's "NRCA Guidelines for Asphalt Shingle Roof Systems."

B. Apron Flashings: Extend lower flange over and beyond each side of downslope asphalt shingles and up the vertical surface.

NOT FOR BIDDING PURPOSES

C. Step Flashings: Install with a headlap of 2 inches and extend over the underlying asphalt shingle and up the vertical surface. Fasten to roof deck only.

D. Rake Drip Edges: Install rake drip-edge flashings over underlayment and fasten to roof deck.

E. Eave Drip Edges: Install eave drip-edge flashings below underlayment and fasten to roof sheathing.

F. Pipe Flashings: Form flashing around pipe penetrations and asphalt shingles. Fasten and seal to asphalt shingles as recommended by manufacturer.

3.4 ASPHALT SHINGLE INSTALLATION

A. General: Install asphalt shingles according to manufacturer's written instructions, recommendations in ARMA's "Residential Asphalt Roofing Manual," and asphalt shingle recommendations in NRCA's "The NRCA Roofing and Waterproofing Manual."

B. Install starter strip along lowest roof edge, consisting of an asphalt shingle strip with self-sealing strip face up at roof edge.

1. Extend asphalt shingles 1/2 inch over fasciae at eaves and rakes, unless indicated otherwise.
2. Install starter strip along rake edge.

C. Install first and remaining courses of asphalt shingles stair-stepping diagonally across roof deck with manufacturer's recommended offset pattern at succeeding courses, maintaining uniform exposure.

D. Fasten asphalt shingle strips with shingle manufacturer’s recommended minimum number of roofing nails located according to manufacturer's written instructions.

1. When ambient temperature during installation is below 50 deg F, seal asphalt shingles with asphalt roofing cement spots.

E. Woven Valleys: Extend succeeding asphalt-shingle courses from both sides of valley 12 inches beyond center of valley, weaving intersecting shingle-strip courses over each other. Use one-piece shingle strips without joints in valley.

1. Do not nail asphalt shingles within 6 inches of valley center.

F. Ridge Vents: Install continuous ridge vents over asphalt shingles according to manufacturer's written instructions. Fasten with roofing nails of sufficient length to penetrate sheathing.

G. Hip and Ridge Shingles: Maintain same exposure of cap shingles as roofing shingle exposure. Lap cap shingles at ridges to shed water away from direction of prevailing winds. Fasten with roofing nails of sufficient length to penetrate sheathing.

1. Fasten ridge cap asphalt shingles to cover ridge vent without obstructing airflow.

END OF SECTION 07 31 13

NOT FOR BIDDING PURPOSES

SECTION 07 46 46

FIBER-CEMENT SIDING

NOT FOR BIDDING PURPOSES

PART 1 - GENERAL

1.1 RELATED DOCUMENTS

A. Drawings and general provisions of the Contract, including General and Supplementary Conditions and Division 01 Specification Sections, apply to this Section.

1.2 SUMMARY

A. Section includes fiber-cement siding and trim.

1.3 COORDINATION

A. Coordinate siding installation with flashings and other adjoining construction to ensure proper sequencing.

1.4 PREINSTALLATION MEETINGS

A. Preinstallation Conference: Conduct conference at Project site.

1.5 ACTION SUBMITTALS

A. Product Data: For each type of product. Include construction details, material descriptions, dimensions of individual components and profiles, and finishes.

B. Samples for Initial Selection: For fiber-cement siding and soffit including related accessories.

C. Samples for Verification: For each type, color, texture, and pattern required.

1. 12-inch-long-by-actual-width Sample of siding.
2. 12-inch-long-by-actual-width Samples of trim and accessories.

1.6 INFORMATIONAL SUBMITTALS

A. Product Certificates: For each type of fiber-cement siding and trim.

B. Product Test Reports: Based on evaluation of comprehensive tests performed by a qualified testing agency, for fiber-cement siding.

C. Research/Evaluation Reports: For each type of fiber-cement siding required, from ICC-ES.

D. Sample Warranty: For special warranty.

1.7 CLOSEOUT SUBMITTALS

A. Maintenance Data: For each type of product, including related accessories, to include in maintenance manuals.

1.8 MAINTENANCE MATERIAL SUBMITTALS

A. Furnish extra materials that match products installed and that are packaged with protective covering for storage and identified with labels describing contents.

1. Furnish full lengths of fiber-cement siding and soffit including related accessories, in a quantity equal to 2 percent of amount installed.

1.9 QUALITY ASSURANCE

A. Mockups: Build mockups to verify selections made under Sample submittals and to demonstrate aesthetic effects and to set quality standards for fabrication and installation.

1. Build mockup of typical wall area as shown on Drawings.
2. Approval of mockups does not constitute approval of deviations from the Contract Documents contained in mockups unless Architect specifically approves such deviations in writing.
3. Subject to compliance with requirements, approved mockups may become part of the completed Work if undisturbed at time of Substantial Completion.

1.10 DELIVERY, STORAGE, AND HANDLING

A. Deliver and store packaged materials in original containers with labels intact until time of use.

B. Store materials on elevated platforms, under cover, and in a dry location.

1.11 WARRANTY

A. Special Warranty: Manufacturer agrees to repair or replace products that fail in materials or workmanship within specified warranty period.

1. Failures include, but are not limited to, the following:

a. Structural failures including cracking and deforming.
b. Deterioration of materials beyond normal weathering.

2. Warranty Period: 50 years from date of Substantial Completion.

PART 2 - PRODUCTS

2.1 MANUFACTURERS

A. Source Limitations: Obtain products, including related accessories, from single source from single manufacturer.

NOT FOR BIDDING PURPOSES

2.2 FIBER-CEMENT SIDING

A. General: ASTM C 1186, Type A, Grade II, fiber-cement board, noncombustible when tested according to ASTM E 136; with a flame-spread index of 25 or less when tested according to ASTM E 84.

1. Basis of Design Product: Subject to compliance with requirements, provide products by James Hardie Building Products, Inc., or comparable product by one of the following:

a. Allura USA.
b. GAF.

B. Labeling: Provide fiber-cement siding that is tested and labeled according to ASTM C 1186 by a qualified testing agency acceptable to authorities having jurisdiction.

C. Nominal Thickness: Not less than 5/16 inch.

D. Horizontal Pattern: Boards 8-1/4 to 8-1/2 inches wide in beaded-edge style.

1. Texture: Smooth.

E. Factory Finishing: Manufacturer's standard finish.

1. Color: As selected from Manufacturer’s complete color options.

2.3 FIBER-CEMENT TRIM

A. General: ASTM C 1186, Type A, Grade II, fiber-cement board, noncombustible when tested according to ASTM E 136; with a flame-spread index of 25 or less when tested according to ASTM E 84.

B. Size: Not less than 5/4-inch-thick by 7-1/4 inches wide.

C. Factory Finishing: Manufacturer's standard finish.

1. Color: As selected from Manufacturer’s complete color options.

2.4 ACCESSORIES

A. Siding Accessories, General: Provide starter strips, edge trim, outside and inside corner caps, and other items as recommended by siding manufacturer for building configuration.

1. Provide accessories matching color and texture of adjacent siding unless otherwise indicated.

B. Flashing: Provide flashing complying with Section 076200 "Sheet Metal Flashing and Trim" at window and door heads and where indicated.

C. Fasteners:

1. For fastening to metal, use ribbed bugle-head screws of sufficient length to penetrate a minimum of 1/4 inch, or three screw-threads, into substrate.
2. For fastening fiber cement, use hot-dip galvanized fasteners.

NOT FOR BIDDING PURPOSES

PART 3 - EXECUTION

3.1 EXAMINATION

A. Examine substrates for compliance with requirements for installation tolerances and other conditions affecting performance of fiber-cement siding and soffit and related accessories.

B. Proceed with installation only after unsatisfactory conditions have been corrected.

3.2 PREPARATION

A. Clean substrates of projections and substances detrimental to application.

3.3 INSTALLATION

A. General: Comply with manufacturer's written installation instructions applicable to products and applications indicated unless more stringent requirements apply.

1. Do not install damaged components.
2. Install fasteners no more than 24 inches o.c.

B. Install joint sealants as specified in Section 079200 "Joint Sealants" and to produce a weathertight installation.

3.4 ADJUSTING AND CLEANING

A. Remove damaged, improperly installed, or otherwise defective materials and replace with new materials complying with specified requirements.

B. Clean finished surfaces according to manufacturer's written instructions and maintain in a clean condition during construction.

END OF SECTION 07 46 46

NOT FOR BIDDING PURPOSES

SECTION 07 53 00

EDPM THERMOSET SINGLE-PLY ROOFING

NOT FOR BIDDING PURPOSES

1.GENERAL

1.1. SECTION INCLUDES

A. EPDM thermoset single-ply roofing.

B. Membrane flashings.

C. Metal flashings.

D. Roof insulation.

1.2. RELATED SECTIONS

A. Section 06 10 00 - Rough Carpentry.

B. Section 07 62 00 - Sheet Metal Flashing and Trim.

C. Section 08 60 00 - Roof Windows and Skylights.

D. Section 22 30 00 - Plumbing Equipment.

1.3. REFERENCES

A. American Society of Civil Engineers (ASCE) - ASCE 7 - Minimum Design Loads for Buildings and Other Structures, Current Revision.

B. ANSI/SPRI RP-4 "Wind Design Standard For Ballasted Single-ply Roofing Systems".

C. ANSI/SPRI WD-1 "Wind Design Standard for Roofing Assemblies".

D. ASTM International (ASTM):
1. ASTM C 208 - Standard Specification for Cellulosic Fiber Insulating Board.
2. ASTM C 578 - Standard Specification for Rigid, Cellular Polystyrene Thermal Insulation.
3. ASTM C 1289 - Standard Specification for Faced Rigid Cellular Polyisocyanurate Thermal Insulation Board.
4. ASTM D 41 - Standard Specification for Asphalt Primer Used in Roofing, Dampproofing, and Waterproofing.
5. ASTM D 412 - Standard Test Methods for Vulcanized Rubber and Thermoplastic Elastomers-Tension.
6. ASTM D 624 - Standard Test Method for Tear Strength of Conventional Vulcanized Rubber and Thermoplastic Elastomers.
7. ASTM D 816 - Standard Test Methods for Rubber Cements.
8. ASTM D 4263 - Standard Test Method for Indicating Moisture in Concrete by the Plastic Sheet Method.
9. ASTM D 4637 - Standard Specification for EPDM Sheet Used In Single-Ply Roof Membrane.
10. ASTM E 96 - Standard Test Methods for Water Vapor Transmission of Materials.

E. Factory Mutual (FM Global):
   1. Approval Guide.
      a.

F. International Code Council (ICC):
   1. International Building Code (IBC).

G. National Roofing Contractors Association (NRCA) - Low Slope Roofing and Waterproofing Manual, Current Edition.

H. Sheet Metal and Air Conditioning Contractors National Association, Inc. (SMACNA) - Architectural Sheet Metal Manual.

I. Underwriters Laboratories (UL):
   1. TGFU R1306 - "Roofing Systems and Materials Guide".
   2. UL-790 - Standard Test Method for Fire Tests of Roof Coverings.

J. ANSI/ASHRAE/IESNA Standard 90.1 (2007): Energy Standard for Buildings Except Low-Rise Residential Buildings

1.4. DESIGN CRITERIA

A. Wind Uplift Performance:
   1. Roof system is designed to withstand wind uplift forces as calculated using the current revision of ASCE-7.
   2. Carlisle; standard 55 MPH wind speed warranty.

B. Fire Resistance Performance:
   1. Roof system will achieve a UL Class A rating when tested in accordance with UL-790.

C. Thermal Performance: Roof system will achieve a minimum R value not less than _25___.

D. Drainage: Provide a roof system with positive drainage where all standing water dissipates within 48 hours after precipitation ends.

E. Building Codes:
   1. Roof system will meet the requirements of all federal, state and local code bodies having jurisdiction.

1.5. SUBMITTALS

A. Submit under provisions of Section 01 3300.

B. Product Data: Manufacturer's data sheets on each product to be used, including:
   1. Preparation instructions and recommendations.
   2. Storage and handling requirements and recommendations.
   3. Installation methods.

C. Detail Drawings:
   1. Submit approved plan, section, elevation or isometric drawings which detail the appropriate methods for all flashing conditions found on the project.
   2. Coordinate approved drawings with locations found on the Contract Drawings.

NOT FOR BIDDING PURPOSES

D. Selection Samples: For each finish product specified, two complete sets of chips representing manufacturer's full range of available colors, membranes, and thicknesses.

E. Verification Samples: For each finish product specified, two samples, minimum size 4 inches (100 mm) square representing actual product, color, and patterns.

1.6. QUALITY ASSURANCE

A. Manufacturer Qualifications: All products specified in this section will be supplied by a single manufacturer with a minimum of twenty (20) years' experience.

B. Installer Qualifications:
1. All products listed in this section are to be installed by a single installer with a minimum of five (5) years demonstrated experience in installing products of the same type and scope as specified.

C. Mock-Up: Provide a mock-up for evaluation of surface preparation, installation techniques and workmanship.

1.7. DELIVERY, STORAGE, AND HANDLING

A. Store products in manufacturer's unopened packaging until ready for installation.

B. Store and dispose of hazardous materials, and materials contaminated by hazardous materials, in accordance with requirements of local authorities having jurisdiction.

1.8. PROJECT CONDITIONS

A. Maintain environmental conditions (temperature, humidity, and ventilation) within limits recommended by manufacturer for optimum results. Do not install products under environmental conditions outside manufacturer's absolute limits.

B. Refer to Carlisle's Roofing System specification, Part II - Application, for General Job Site Considerations.

C. Material Safety Data Sheets (MSDS) must be on location at all times during the transportation, storage and application of materials.

D. When positioning membrane sheets, exercise care to locate all field splices away from low spots and out of drain sumps. All field splices should be shingled to prevent bucking of water.

E. When loading materials onto the roof, the Carlisle Authorized Roofing Applicator must comply with the requirements of the building owner to prevent overloading and possible disturbance to the building structure.

F. Proceed with roofing work only when weather conditions are in compliance with the manufacturer's recommended limitations, and when conditions will permit the work to proceed in accordance with the manufacturer's requirements and recommendations.

G. Proceed with work so new roofing materials are not subject to construction traffic. When necessary, new roof sections shall be protected and inspected upon completion for possible damage.

NOT FOR BIDDING PURPOSES

H. Provide protection, such as 3/4 inch thick plywood, for all roof areas exposed to traffic during construction. Plywood must be smooth and free of fasteners and splinters.

I. The surface on which the insulation or roofing membrane is to be applied shall be clean, smooth, dry, and free of projections or contaminants that would prevent proper application of or be incompatible with the new installation, such as fins, sharp edges, foreign materials, oil and grease.

J. New roofing shall be complete and weathertight at the end of the work day.

K. Contaminants such as grease, fats and oils shall not be allowed to come in direct contact with the roofing membrane.

2.PRODUCTS

2.1. MANUFACTURERS

A. Basis of Design: Carlisle SynTec Systems, FleeceBack 115 EPDM Roof System

B. Requests for substitutions will be considered in accordance with provisions of Section 01 60 00.

2.2. SCOPE / APPLICATION

A. Roof System: Provide a waterproof roof system, capable of withstanding uplift forces as specified in Design Criteria.
1. Membrane Attachment: Fully Adhered.

B. Base Flashing: Provide a waterproof, fully adhered base flashing system at all penetrations, plane transitions and terminations.

C. Insulation: Provide a roof insulation system beneath the finish membrane.

2.3. INSULATION

A. Composite Board: Composite insulation panel comprised of 1/2 inch (13 mm) high-density Polyiso cover board laminated during the manufacturing process to SecurShield rigid Polyiso roof insulation meeting ASTM C1289 Type II, Class 2. Carlisle SecurShield HD Composite.

1. Compressive Strength: Grade 2 (20 psi) (138 kPa).

B. SecureShield Rigid Polyiso Roof Insulation 2” meeting ASTM C1289 Type II Polyiso

2.4. INSULATION ADHESIVE

A. FAST Box Set: A two-component, polyurethane construction grade, low-rise expanding adhesive designed for bonding insulation to various substrates using a portable applicator.

B. FAST Bag in a Box: A two-component, polyurethane construction grade, low-rise expanding adhesive designed for bonding insulation to various substrates, packaged for use with the PaceCart 2.

NOT FOR BIDDING PURPOSES

2.5. ETHYLENE, PROPYLENE, DIENE TERPOLYMER (EPDM) MEMBRANE

A. Sure-Seal FleeceBACK Membrane: Cured, non-reinforced EPDM membrane with a 55 mil fleece bonded to the underside. Meets the requirements of ASTM D 4637 Type I.
1. Color: Black.
2. Membrane Thickness: 115 mil nominal / 60 mil over fleece.
3. Sheet Dimensions:
a. Width: 10 feet (3.04 m) maximum.
b. Length: 100 feet (30.5 m) maximum.
4. Performance:
a. Breaking Strength: 200 lbf (890 N) minimum.
b. Tear Strength: 45 lbf (200 N) minimum.
c. Elongation: 480 percent.

2.6. FLASHING ACCESSORlES

A. Sure-Seal (black)Pressure-Sensitive Pipe Seals with Factory-Applied TAPE on the deck flange are available for use with Sure-Seal/Sure-White Roofing systems.

B. Sure-Seal Pressure-Sensitive Overlayment Strip: A nominal 40-mil black, semi-cured EPDM membrane laminated to a nominal 35-mil cured, Factory-Applied TAPE for flashing gravel stops, metal edgings and Seam Fastening Plates.

C. Sure-Seal Fully Pressure Sensitive Curb Flashing: 60 mil Sure-Seal cured EPDM Membrane laminated to a 35 mil 6 inch (152mm) and 12 inch (305mm) SecurTape.

D. Sure-Seal Pressure-Sensitive RUSS (Reinforced Universal Securement Strip):
1. 6 inch (152 mm) RUSS: A nominal 6 inch (152 mm) wide, 45-mil thick reinforced EPDM membrane with a nominal 3 inch (76mm) wide 30-mil thick cured synthetic rubber pressure-sensitive adhesive laminated to one edge. This product provides perimeter securement, and additional membrane securement at angle changes for Adhered, Ballasted, and Mechanically Fastened Roofing Systems.

2.7. CLEANERS, PRIMERS, ADHESIVES AND SEALANTS

A. FAST Adhesive Box Sets: A spray applied, two-component, polyurethane construction grade, low-rise expanding adhesive used to securely bond FleeceBACK membranes to a variety of substrates.

B. FAST Bag in a Box: A two-component, polyurethane construction grade, low-rise expanding adhesive designed for bonding insulation to various substrates, packaged for use with the PaceCart 2.

3.EXECUTION

3.1. EXAMINATION

A. Do not begin installation until substrates have been properly prepared.

B. If substrate preparation is the responsibility of another installer, notify Architect of unsatisfactory preparation before proceeding.

3.2. PREPARATION

NOT FOR BIDDING PURPOSES

A. Clean surfaces thoroughly prior to installation.

B. Prepare surfaces using the methods recommended by the manufacturer for achieving the best result for the substrate under the project conditions.

C. Do not commence work until all other work trades have completed jobs that require them to traverse the deck on foot or with equipment.

D. A vapor retarder / temporary roof (Carlisle 725 TR Air & Vapor Barrier/Temporary Roof) may be applied to protect the inside of the structure prior to the roof system installation.

3.3. INSULATION - SYSTEM DESIGN

A. Base Layer:
1. Type: __SecureShield PolyISO_____.
2. Thickness: ___2___ inches
3. Attachment Method: _Fast Adhesive____.

B. Top Layer:
1. Type: __1/2" HD Composite w/ 2" SecureShield ISO_____.
2. Thickness: __2 1/2"___ inches
3. Attachment Method: __Fast Adhesive____.

3.4. INSULATION PLACEMENT

A. Install insulation or membrane underlayment in multiple layers over the substrate with boards butted tightly together with no joints or gaps greater than 1/4 inch (6 mm). Stagger joints both horizontally and vertically.

B. Secure insulation to the substrate with the required mechanical fasteners or insulation adhesive in accordance with the manufacturer's current application guidelines.

C. Do not install wet, damaged or warped insulation boards.

D. Stagger joints in one direction unless joints are to be taped. Install insulation boards snug. Gaps between board joints shall not exceed 1/4 inch (6 mm). Fill all gaps in excess of 1/4 inch (6 mm) with same insulation material.

E. Wood nailers must be at least 3 1/2 inches (89 mm) wide or 1 inch (25 mm) wider than adjacent metal flange. Thickness must equal that of insulation but not less than 1 inch (25 mm) thickness.

F. Miter and fill the edges of the insulation boards at ridges, valleys and other changes in plane to prevent open joints or irregular surfaces. Avoid breaking or crushing of the insulation at the corners.

G. Do not install any more insulation than will be completely waterproofed each day.

3.5. INSULATION ATTACHMENT

A. Securely attach insulation to the roof deck for Adhered Roofing Systems. Attachment must have been successfully tested to meet or exceed the calculated uplift pressure required by the International Building Code (ASCE-7) or ANSI/SPRI WD-1.

NOT FOR BIDDING PURPOSES

B. Enhance the perimeter and corner areas in accordance with the International Building Code (ASCE-7) or ANSI/SPRI WD-1.

C. Install insulation layers, maximum 4 feet by 4 feet (1220 mm by 1220 mm), applied with adhesive, coverage rate as necessary to achieve the specified attachment and uplift rating. Press each board firmly into place after adhesive develops strings when touched, typically 1-1/2 to 2 minutes after adhesive was applied, and roll with a weighted roller. Add temporary weight and use relief cuts to ensure boards are well adhered. Stagger the joints of additional layers by a minimum of 6 inches (152 mm).

3.6. MEMBRANE PLACEMENT AND ATTACHMENT (FleeceBACK Fully Adhered)

A. Position and unroll successive sheets and align to provide for a minimum 3 inch (76 mm) wide splice.

B. Fold adjacent sheets in half lengthwise to expose an approximate 10 foot (3046 mm) wide substrate area.

C. Membrane which will have the adjacent sheet spliced over it should be adhered to the substrate first. In this fashion, selvage edge splice area will not be contaminated by setting splice edge into the FAST Adhesive.

D. Spray or extrude FAST Adhesive onto the substrate and allow to foam up approximately 1/8 inch (3mm). Wait for the adhesive to achieve "string" when a small object is lifted out if the adhesive.

E. Place the membrane into adhesive after adhesive develops strings when touched, typically 1-1/2 to 2 minutes after adhesive was applied, and roll with a weighted roller.

F. Apply FAST Adhesive to the substrate and continue process described above until all sheets are fully bonded, allowing for necessary splice overlaps at selvage edges. At end laps (along the width of the sheet) membrane shall be butted together which will be overlaid with 6 inch wide Pressure-Sensitive Cured Cover Strip or Pressure-Sensitive Overlayment Strip.

3.7. MEMBRANE SPLICING (Tape Splice)

A. Overlap adjacent sheets and mark a line 1/2 inch out from the top sheet.

B. Fold the top sheet back and clean the dry splice area (minimum 2 1/2 inches (64 mm wide) of both membrane sheets with Sure-Seal Primer as required by the membrane manufacturer.

C. Where Splice Tape is not Factory-Applied, apply Splice Tape to bottom sheet with the edge of the release film along the marked line. Press tape onto the sheet using hand pressure. Overlap tape roll ends a minimum of 1 inch (13mm).

D. Remove the release film and press the top sheet onto the tape using hand pressure.

E. Roll the seam toward the splice edge with a 2 inch (51 mm) wide steel roller.

F. Install Pressure-Sensitive "T" Joint Cover, a 6 inch wide (152 mm) section of Pressure-Sensitive Flashing or Elastoform Flashing over all field splice intersections.

G. When using non-Pressure-Sensitive Elastoform Flashing, seal edges of flashing with Lap Sealant.

NOT FOR BIDDING PURPOSES

H. The use of Lap Sealant with tape splices is optional except at tape overlaps and cut edges of reinforced membrane where Lap Sealant is required.

3.8. FLASHING

A. Wall and curb flashing shall be cured EPDM membrane. Continue the deck membrane as wall flashing where practicable.

B. Follow manufacturer's typical flashing procedures for all wall, curb, and penetration flashing including metal edging/coping and roof drain applications.

3.9. WALKWAYS

A. Install walkways at all traffic concentration points (such as roof hatches, access doors, rooftop ladders, etc.) and all locations as identified on the Contract Drawings.

B. Adhere walkways pads to the EPDM membrane in accordance with the manufacturer's current application guidelines.

3.10. DAILY SEALS

A. On phased roofing, when the completion of flashings and terminations is not achieved by the end of the work day, a daily seal must be performed to temporarily close the membrane to prevent water infiltration.

B. Use Sure-Seal Pourable Sealer or other acceptable membrane seal in accordance with the manufacturer's requirements.

3.11. CLEAN UP

A. Perform daily clean-up to collect all wrappings, empty containers, paper, and other debris from the project site. Upon completion, all debris must be disposed of in a legally acceptable manner.

B. Prior to the manufacturer's inspection for warranty, the applicator must perform a pre-inspection to review all work and to verify all flashing has been completed as well as the application of all caulking.

3.12. PROTECTION

A. Protect installed products until completion of project.

B. Touch-up, repair or replace damaged products before Substantial Completion.

END OF SECTION 07 53 00

NOT FOR BIDDING PURPOSES

NOT FOR BIDDING PURPOSES

SECTION 07 62 00

SHEET METAL FLASHING AND TRIM

PART 1 - GENERAL

1.1 RELATED DOCUMENTS

A. Drawings and general provisions of the Contract, including General and Supplementary Conditions and Division 01 Specification Sections, apply to this Section.

1.2 SUMMARY

A. Section Includes:

1. Manufactured reglets with counterflashing.
2. Formed roof-drainage sheet metal fabrications.
3. Formed low-slope roof sheet metal fabrications.
4. Formed steep-slope roof sheet metal fabrications.

1.3 COORDINATION

A. Coordinate sheet metal flashing and trim layout and seams with sizes and locations of penetrations to be flashed, and joints and seams in adjacent materials.

B. Coordinate sheet metal flashing and trim installation with adjoining roofing and wall materials, joints, and seams to provide leakproof, secure, and noncorrosive installation.

1.4 PREINSTALLATION MEETINGS

A. Preinstallation Conference: Conduct conference at Project site.

1. Review construction schedule. Verify availability of materials, Installer's personnel, equipment, and facilities needed to make progress and avoid delays.
2. Review special roof details, roof drainage, roof-penetration flashing, equipment curbs, and condition of other construction that affect sheet metal flashing and trim.
3. Review requirements for insurance and certificates if applicable.
4. Review sheet metal flashing observation and repair procedures after flashing installation.

1.5 ACTION SUBMITTALS

A. Product Data: For each type of product.

1. Include construction details, material descriptions, dimensions of individual components and profiles, and finishes.

B. Shop Drawings: For sheet metal flashing and trim.

1. Include plans, elevations, sections, and attachment details.
2. Detail fabrication and installation layouts, expansion-joint locations, and keyed details. Distinguish between shop-and field-assembled work.
3. Include identification of material, thickness, weight, and finish for each item and location in Project.
4. Include details for forming, including profiles, shapes, seams, and dimensions.
5. Include details for joining, supporting, and securing, including layout and spacing of fasteners, cleats, clips, and other attachments. Include pattern of seams.
6. Include details of termination points and assemblies.
7. Include details of expansion joints and expansion-joint covers, including showing direction of expansion and contraction from fixed points.
8. Include details of roof-penetration flashing.
9. Include details of edge conditions, including eaves, ridges, valleys, rakes, crickets, and counterflashings as applicable.
10. Include details of special conditions.
11. Include details of connections to adjoining work.
12. Detail formed flashing and trim at scale of not less than 1-1/2 inches per 12 inches.

C. Samples for Initial Selection: For each type of sheet metal and accessory indicated with factory-applied finishes.

D. Samples for Verification: For each type of exposed finish.

1. Sheet Metal Flashing: 12 inches long by actual width of unit, including finished seam and in required profile. Include fasteners, cleats, clips, closures, and other attachments.
2. Trim, Metal Closures, Expansion Joints, Joint Intersections, and Miscellaneous Fabrications: 12 inches long and in required profile. Include fasteners and other exposed accessories.
3. Unit-Type Accessories and Miscellaneous Materials: Full-size Sample.
4. Anodized Aluminum Samples: Samples to show full range to be expected for each color required.

1.6 INFORMATIONAL SUBMITTALS

A. Product Certificates: For each type of coping and roof edge flashing that is SPRI ES-1 tested.

B. Product Test Reports: For each product, for tests performed by a qualified testing agency.

C. Sample Warranty: For special warranty.

1.7 CLOSEOUT SUBMITTALS

A. Maintenance Data: For sheet metal flashing and trim, and its accessories, to include in maintenance manuals.

1.8 QUALITY ASSURANCE

A. Fabricator Qualifications: Employs skilled workers who custom fabricate sheet metal flashing and trim similar to that required for this Project and whose products have a record of successful in-service performance.

NOT FOR BIDDING PURPOSES

1.9 DELIVERY, STORAGE, AND HANDLING

A. Do not store sheet metal flashing and trim materials in contact with other materials that might cause staining, denting, or other surface damage. Store sheet metal flashing and trim materials away from uncured concrete and masonry.

B. Protect strippable protective covering on sheet metal flashing and trim from exposure to sunlight and high humidity, except to extent necessary for period of sheet metal flashing and trim installation.

1.10 WARRANTY

A. Special Warranty on Finishes: Manufacturer agrees to repair finish or replace sheet metal flashing and trim that shows evidence of deterioration of factory-applied finishes within specified warranty period.

1. Exposed Panel Finish: Deterioration includes, but is not limited to, the following:

a. Color fading more than 5 Hunter units when tested according to ASTM D 2244.
b. Chalking in excess of a No. 8 rating when tested according to ASTM D 4214.
c. Cracking, checking, peeling, or failure of paint to adhere to bare metal.

2. Finish Warranty Period: 20 years from date of Substantial Completion.

PART 2 - PRODUCTS

2.1 PERFORMANCE REQUIREMENTS

A. General: Sheet metal flashing and trim assemblies shall withstand wind loads, structural movement, thermally induced movement, and exposure to weather without failure due to defective manufacture, fabrication, installation, or other defects in construction. Completed sheet metal flashing and trim shall not rattle, leak, or loosen, and shall remain watertight.

B. Sheet Metal Standard for Flashing and Trim: Comply with NRCA's "The NRCA Roofing Manual" and SMACNA's "Architectural Sheet Metal Manual" requirements for dimensions and profiles shown unless more stringent requirements are indicated.

C. Thermal Movements: Allow for thermal movements from ambient and surface temperature changes to prevent buckling, opening of joints, overstressing of components, failure of joint sealants, failure of connections, and other detrimental effects. Base calculations on surface temperatures of materials due to both solar heat gain and nighttime-sky heat loss.

1. Temperature Change: 120 deg F, ambient; 180 deg F, material surfaces.

2.2 SHEET METALS

A. General: Protect mechanical and other finishes on exposed surfaces from damage by applying strippable, temporary protective film before shipping.

NOT FOR BIDDING PURPOSES

B. Aluminum Sheet: ASTM B 209, alloy as standard with manufacturer for finish required, with temper as required to suit forming operations and performance required; with smooth, flat surface.

1. As-Milled Finish: One-side bright mill.
2. Exposed Coil-Coated Finish:

a. Two-Coat Fluoropolymer: AAMA 2605. Fluoropolymer finish containing not less than 70 percent PVDF resin by weight in color coat. Prepare, pretreat, and apply coating to exposed metal surfaces to comply with coating and resin manufacturers' written instructions.

3. Color: As selected by Architect from manufacturer's full range.
4. Concealed Finish: Pretreat with manufacturer's standard white or light-colored acrylic or polyester backer finish, consisting of prime coat and wash coat with minimum total dry film thickness of 0.5 mil.

C. Stainless-Steel Sheet: ASTM A 240/A 240M or ASTM A 666, Type 316, dead soft, fully annealed; with smooth, flat surface.

1. Finish: 2D (dull, cold rolled).

2.3 UNDERLAYMENT MATERIALS

A. Felt: ASTM D 226/D 226M, Type II (No. 30), asphalt-saturated organic felt; nonperforated.

2.4 MISCELLANEOUS MATERIALS

A. General: Provide materials and types of fasteners, protective coatings, sealants, and other miscellaneous items as required for complete sheet metal flashing and trim installation and as recommended by manufacturer of primary sheet metal or manufactured item unless otherwise indicated.

B. Fasteners: Wood screws, annular threaded nails, self-tapping screws, self-locking rivets and bolts, and other suitable fasteners designed to withstand design loads and recommended by manufacturer of primary sheet metal or manufactured item.

1. General: Blind fasteners or self-drilling screws, gasketed, with hex-washer head.

a. Exposed Fasteners: Heads matching color of sheet metal using plastic caps or factory-applied coating. Provide metal-backed EPDM or PVC sealing washers under heads of exposed fasteners bearing on weather side of metal.
b. Blind Fasteners: High-strength aluminum or stainless-steel rivets suitable for metal being fastened.

2. Fasteners for Aluminum Sheet: Aluminum or Series 300 stainless steel.
3. Fasteners for Stainless-Steel Sheet: Series 300 stainless steel.

C. Sealant Tape: Pressure-sensitive, 100 percent solids, polyisobutylene compound sealant tape with release-paper backing. Provide permanently elastic, nonsag, nontoxic, nonstaining tape 1/2-inch-wide and 1/8 inch thick.

NOT FOR BIDDING PURPOSES

D. Elastomeric Sealant: ASTM C 920, elastomeric polyurethane polymer sealant; of type, grade, class, and use classifications required to seal joints in sheet metal flashing and trim and remain watertight.

E. Butyl Sealant: ASTM C 1311, single-component, solvent-release butyl rubber sealant; polyisobutylene plasticized; heavy bodied for hooked-type expansion joints with limited movement.

F. Epoxy Seam Sealer: Two-part, noncorrosive, aluminum seam-cementing compound, recommended by aluminum manufacturer for exterior nonmoving joints, including riveted joints.

G. Bituminous Coating: Cold-applied asphalt emulsion according to ASTM D 1187.

H. Asphalt Roofing Cement: ASTM D 4586, asbestos free, of consistency required for application.

2.5 FABRICATION, GENERAL

A. General: Custom fabricate sheet metal flashing and trim to comply with details shown and recommendations in cited sheet metal standard that apply to design, dimensions, geometry, metal thickness, and other characteristics of item required. Fabricate sheet metal flashing and trim in shop to greatest extent possible.

1. Fabricate sheet metal flashing and trim in thickness or weight needed to comply with performance requirements, but not less than that specified for each application and metal.
2. Obtain field measurements for accurate fit before shop fabrication.
3. Form sheet metal flashing and trim to fit substrates without excessive oil canning, buckling, and tool marks; true to line, levels, and slopes; and with exposed edges folded back to form hems.
4. Conceal fasteners and expansion provisions where possible. Do not use exposed fasteners on faces exposed to view.

B. Fabrication Tolerances: Fabricate sheet metal flashing and trim that is capable of installation to a tolerance of 1/4 inch in 20 feet on slope and location lines indicated on Drawings and within 1/8-inch offset of adjoining faces and of alignment of matching profiles.

C. Expansion Provisions: Form metal for thermal expansion of exposed flashing and trim.

1. Form expansion joints of intermeshing hooked flanges, not less than 1-inch deep, filled with butyl sealant concealed within joints.
2. Use lapped expansion joints only where indicated on Drawings.

D. Sealant Joints: Where movable, nonexpansion-type joints are required, form metal to provide for proper installation of elastomeric sealant according to cited sheet metal standard.

E. Fabricate cleats and attachment devices from same material as accessory being anchored or from compatible, noncorrosive metal.

F. Fabricate cleats and attachment devices of sizes as recommended by cited sheet metal standard for application, but not less than thickness of metal being secured.

G. Seams: Fabricate nonmoving seams with flat-lock seams. Form seams and seal with elastomeric sealant unless otherwise recommended by sealant manufacturer for intended use. Rivet joints where necessary for strength.

NOT FOR BIDDING PURPOSES

H. Seams for Aluminum: Fabricate nonmoving seams with flat-lock seams. Form seams and seal with epoxy seam sealer. Rivet joints where necessary for strength.

I. Do not use graphite pencils to mark metal surfaces.

2.6 ROOF-DRAINAGE SHEET METAL FABRICATIONS

A. Hanging Gutters: Fabricate to cross section required, complete with end pieces, outlet tubes, and other accessories as required. Fabricate in minimum 96-inch-long sections. Furnish flat-stock gutter brackets and flat-stock gutter spacers and straps fabricated from same metal as gutters, of size recommended by cited sheet metal standard but with thickness not less than twice the gutter thickness. Fabricate expansion joints, expansion-joint covers, and gutter accessories from same metal as gutters. Shop fabricate interior and exterior corners.

1. Gutter Profile: As indicated on the drawings.
2. Expansion Joints: Lap type.
3. Gutters with Girth up to 15 Inches: Fabricate from the following materials:
   a. Aluminum: 0.032 inch thick.
4. Gutters with Girth 16 to 20 Inches: Fabricate from the following materials:
   a. Aluminum: 0.040 inch thick.
5. Gutters with Girth 21 to 25 Inches: Fabricate from the following materials:
   a. Aluminum: 0.050 inch thick.
6. Gutters with Girth 26 to 30 Inches: Fabricate from the following materials:
   a. Aluminum: 0.063 inch thick.
7. Gutters with Girth 31 to 35 Inches: Fabricate from the following materials:
   a. Stainless Steel: 0.038 inch thick.

B. Downspouts: Fabricate downspouts to dimensions indicated on drawings, complete with mitered elbows. Furnish with metal hangers from same material as downspouts and anchors.

1. Fabricated Hanger Style: As selected by Architect unless indicated on the Drawings according to SMACNA's "Architectural Sheet Metal Manual."
2. Fabricate from the following materials:

   a. Aluminum: 0.024 inch thick.

2.7 LOW-SLOPE ROOF SHEET METAL FABRICATIONS

A. Roof and Roof-to-Wall Transition Expansion-Joint Cover: Fabricate from the following materials: Shop fabricate interior and exterior corners.

1. Aluminum: 0.050 inch thick.
2. Stainless Steel: 0.025 inch thick.

B. Base Flashing: Shop fabricate interior and exterior corners. Fabricate from the following materials:

1. Aluminum: 0.040 inch thick.
2. Stainless Steel: 0.019 inch thick.

NOT FOR BIDDING PURPOSES

C. Counterflashing: Shop fabricate interior and exterior corners. Fabricate from the following materials:

1. Aluminum: 0.032 inch thick.
2. Stainless Steel: 0.019 inch thick.

D. Flashing Receivers: Fabricate from the following materials:

1. Aluminum: 0.032 inch thick.
2. Stainless Steel: 0.016 inch thick.

E. Roof-Penetration Flashing: Fabricate from the following materials:

1. Stainless Steel: 0.019 inch thick.

F. Roof-Drain Flashing: Fabricate from the following materials:

1. Stainless Steel: 0.016 inch thick.

2.8 STEEP-SLOPE ROOF SHEET METAL FABRICATIONS

A. Apron, Step, Cricket, and Backer Flashing: Fabricate from the following materials:

1. Aluminum: 0.032 inch thick.
2. Stainless Steel: 0.016 inch thick.

B. Valley Flashing: Fabricate from the following materials:

1. Copper: 16 oz./sq. ft.
2. Stainless Steel: 0.019 inch thick.

C. Drip Edges: Fabricate from the following materials:

1. Aluminum: 0.032 inch thick.
2. Stainless Steel: 0.016 inch thick.

D. Eave, Rake, Ridge, and Hip Flashing: Fabricate from the following materials:

1. Aluminum: 0.032 inch thick.
2. Stainless Steel: 0.016 inch thick.

E. Counterflashing: Shop fabricate interior and exterior corners. Fabricate from the following materials:

1. Aluminum: 0.032 inch thick.
2. Stainless Steel: 0.019 inch thick.

F. Flashing Receivers: Fabricate from the following materials:

1. Aluminum: 0.032 inch thick.
2. Stainless Steel: 0.016 inch thick.

G. Roof-Penetration Flashing: Fabricate from the following materials:

NOT FOR BIDDING PURPOSES

1. Stainless Steel: 0.019 inch thick.

2.9 WALL SHEET METAL FABRICATIONS

A. Opening Flashings in Frame Construction: Fabricate head, sill, jamb, and similar flashings to extend 4 inches beyond wall openings. Form head and sill flashing with 2-inch-high, end dams. Fabricate from the following materials:

1. Aluminum: 0.032 inch thick.
2. Stainless Steel: 0.016 inch thick.

B. Wall Expansion-Joint Cover: Fabricate from the following materials:

1. Aluminum: 0.040 inch thick.
2. Stainless Steel: 0.019 inch thick.

PART 3 - EXECUTION

3.1 EXAMINATION

A. Examine substrates, areas, and conditions, with Installer present, for compliance with requirements for installation tolerances, substrate, and other conditions affecting performance of the Work.

1. Verify compliance with requirements for installation tolerances of substrates.
2. Verify that substrate is sound, dry, smooth, clean, sloped for drainage, and securely anchored.
3. Verify that air-or water-resistant barriers have been installed over sheathing or backing substrate to prevent air infiltration or water penetration.

B. Proceed with installation only after unsatisfactory conditions have been corrected.

3.2 UNDERLAYMENT INSTALLATION

A. Felt Underlayment: Install felt underlayment, wrinkle free, using adhesive to minimize use of mechanical fasteners under sheet metal flashing and trim. Apply in shingle fashion to shed water, with lapped joints of not less than 2 inches.

3.3 INSTALLATION, GENERAL

A. General: Anchor sheet metal flashing and trim and other components of the Work securely in place, with provisions for thermal and structural movement. Use fasteners, protective coatings, separators, sealants, and other miscellaneous items as required to complete sheet metal flashing and trim system.

1. Install sheet metal flashing and trim true to line, levels, and slopes. Provide uniform, neat seams with minimum exposure of welds and sealant.
2. Install sheet metal flashing and trim to fit substrates and to result in watertight performance. Verify shapes and dimensions of surfaces to be covered before fabricating sheet metal.
3. Space cleats not more than 12 inches apart. Attach each cleat with at least two fasteners. Bend tabs over fasteners.
4. Install exposed sheet metal flashing and trim with limited oil canning, and free of buckling and tool

NOT FOR BIDDING PURPOSES

marks.
5. Torch cutting of sheet metal flashing and trim is not permitted.
6. Do not use graphite pencils to mark metal surfaces.

A. Metal Protection: Where dissimilar metals contact each other, or where metal contacts pressure-treated wood or other corrosive substrates, protect against galvanic action or corrosion by painting contact surfaces with bituminous coating or by other permanent separation as recommended by sheet metal manufacturer or cited sheet metal standard.

1. Coat concealed side of uncoated-aluminum and stainless-steel sheet metal flashing and trim with bituminous coating where flashing and trim contact wood, ferrous metal, or cementitious construction.
2. Underlayment: Where installing sheet metal flashing and trim directly on cementitious or wood substrates, install underlayment and cover with slip sheet.

C. Expansion Provisions: Provide for thermal expansion of exposed flashing and trim. Space movement joints at maximum of 10 feet with no joints within 24 inches of corner or intersection.

1. Form expansion joints of intermeshing hooked flanges, not less than 1 inch deep, filled with sealant concealed within joints.
2. Use lapped expansion joints only where indicated on Drawings.

D. Fasteners: Use fastener sizes that penetrate substrate not less than recommended by fastener manufacturer to achieve maximum pull-out resistance.

E. Conceal fasteners and expansion provisions where possible in exposed work and locate to minimize possibility of leakage. Cover and seal fasteners and anchors as required for a tight installation.

F. Seal joints as required for watertight construction.

1. Use sealant-filled joints unless otherwise indicated. Embed hooked flanges of joint members not less than 1 inch into sealant. Form joints to completely conceal sealant. When ambient temperature at time of installation is between 40 and 70 deg F, set joint members for 50 percent movement each way. Adjust setting proportionately for installation at higher ambient temperatures. Do not install sealant-type joints at temperatures below 40 deg F.
2. Prepare joints and apply sealants to comply with requirements in Section 079200 "Joint Sealants."

G. Rivets: Rivet joints in uncoated aluminum where necessary for strength.

3.4 ROOF-DRAINAGE SYSTEM INSTALLATION

A. General: Install sheet metal roof-drainage items to produce complete roof-drainage system according to cited sheet metal standard unless otherwise indicated. Coordinate installation of roof perimeter flashing with installation of roof-drainage system.

B. Hanging Gutters: Join sections with joints sealed with sealant. Provide for thermal expansion. Attach gutters at eave or fascia to firmly anchor them in position. Provide end closures and seal watertight with sealant. Slope to downspouts.

NOT FOR BIDDING PURPOSES

1. Fasten gutter spacers to front and back of gutter.
2. Anchor gutter with straps spaced not more than 24 inches apart to roof deck, unless otherwise indicated, and loosely lock to front gutter bead.
3. Install gutter with expansion joints at locations indicated, but not exceeding, 50 feet apart. Install expansion-joint caps.

C. Downspouts: Join sections with 1-1/2-inch telescoping joints.

1. Provide hangers with fasteners designed to hold downspouts securely to walls. Locate hangers at top and bottom and at approximately 60 inches o.c.
2. Provide elbows at base of downspout to direct water away from building where indicated on Drawings.
3. Connect downspouts to underground drainage system.

D. Expansion-Joint Covers: Install expansion-joint covers at locations and of configuration indicated. Lap joints minimum of 4 inches in direction of water flow.

3.5 ROOF FLASHING INSTALLATION

A. General: Install sheet metal flashing and trim to comply with performance requirements, sheet metal manufacturer's written installation instructions, and cited sheet metal standard. Provide concealed fasteners where possible, and set units true to line, levels, and slopes. Install work with laps, joints, and seams that are permanently watertight and weather resistant.

B. Pipe or Post Counterflashing: Install counterflashing umbrella with close-fitting collar with top edge flared for elastomeric sealant, extending minimum of 4 inches over base flashing. Install stainless-steel draw band and tighten.

C. Counterflashing: Coordinate installation of counterflashing with installation of base flashing. Insert counterflashing in reglets or receivers and fit tightly to base flashing. Extend counterflashing 4 inches over base flashing. Lap counterflashing joints minimum of 4 inches. Secure in waterproof manner by means of snap-in installation and sealant or lead wedges and sealant or interlocking folded seam or blind rivets and sealant unless otherwise indicated.

D. Roof-Penetration Flashing: Coordinate installation of roof-penetration flashing with installation of roofing and other items penetrating roof. Seal with butyl sealant and clamp flashing to pipes that penetrate roof.

3.6 WALL FLASHING INSTALLATION

A. General: Install sheet metal wall flashing to intercept and exclude penetrating moisture according to cited sheet metal standard unless otherwise indicated. Coordinate installation of wall flashing with installation of wall-opening components such as windows, doors, and louvers.

B. Through-Wall Flashing: Installation of through-wall flashing is specified in Section 042000 "Unit Masonry."

C. Reglets: Installation of reglets is specified in Section 033000 "Cast-in-Place Concrete." and Section 042000 "Unit Masonry."

NOT FOR BIDDING PURPOSES

D. Opening Flashings in Frame Construction: Install continuous head, sill, jamb, and similar flashings to extend 4 inches beyond wall openings.

3.7 ERECTION TOLERANCES

A. Installation Tolerances: Shim and align sheet metal flashing and trim within installed tolerance of 1/4 inch in 20 feet on slope and location lines indicated on Drawings and within 1/8-inch offset of adjoining faces and of alignment of matching profiles.

3.8 CLEANING AND PROTECTION

A. Clean exposed metal surfaces of substances that interfere with uniform oxidation and weathering.

B. Clean off excess sealants.

C. Remove temporary protective coverings and strippable films as sheet metal flashing and trim are installed unless otherwise indicated in manufacturer's written installation instructions. On completion of sheet metal flashing and trim installation, remove unused materials and clean finished surfaces as recommended by sheet metal flashing and trim manufacturer. Maintain sheet metal flashing and trim in clean condition during construction.

D. Replace sheet metal flashing and trim that have been damaged or that have deteriorated beyond successful repair by finish touchup or similar minor repair procedures.

END OF SECTION 07 62 00

NOT FOR BIDDING PURPOSES

THIS PAGE INTENTIONALLY LEFT BLANK

NOT FOR BIDDING PURPOSES

NOT FOR BIDDING PURPOSES

SECTION 07 71 00

ROOF SPECIALTIES

PART 1 - GENERAL

1.1 RELATED DOCUMENTS

A. Drawings and general provisions of the Contract, including General and Supplementary Conditions and Division 01 Specification Sections, apply to this Section.

1.2 SUMMARY

A. Section Includes:

1. Copings.
2. Roof-edge specialties.
3. Reglets and counterflashings.

B. Preinstallation Conference: Conduct conference at Project site.

1. Meet with Owner, Architect, Owner's insurer if applicable, roofing-system testing and inspecting agency representative, roofing Installer, roofing-system manufacturer's representative, Installer, structural-support Installer, and installers whose work interfaces with or affects roof specialties, including installers of roofing materials and accessories.
2. Examine substrate conditions for compliance with requirements, including flatness and attachment to structural members.
3. Review special roof details, roof drainage, and condition of other construction that will affect roof specialties.

1.3 ACTION SUBMITTALS

A. Product Data: For each type of product.

1. Include construction details, material descriptions, dimensions of individual components and profiles, and finishes.

B. Shop Drawings: For roof specialties.

1. Include plans, elevations, expansion-joint locations, keyed details, and attachments to other work. Distinguish between plant-and field-assembled work.
2. Include details for expansion and contraction; locations of expansion joints, including direction of expansion and contraction.
3. Indicate profile and pattern of seams and layout of fasteners, cleats, clips, and other attachments.
4. Detail termination points and assemblies, including fixed points.
5. Include details of special conditions.

C. Samples: For each type of roof specialty and for each color and texture specified.

D. Samples for Initial Selection: For each type of roof specialty indicated with factory-applied color finishes.

E. Samples for Verification:

1. Include Samples of each type of roof specialty to verify finish and color selection, in manufacturer's standard sizes.
2. Include copings, roof-edge specialties and reglets and counterflashings made from 12inch lengths of full-size components in specified material, and including fasteners, cover joints, accessories, and attachments.

1.4 INFORMATIONAL SUBMITTALS

A. Qualification Data: For manufacturer.

B. Product Certificates: For each type of roof specialty.

C. Product Test Reports: For copings and roof-edge flashings, for tests performed by a qualified testing agency.

D. Sample Warranty: For manufacturer's special warranty.

1.5 CLOSEOUT SUBMITTALS

A. Maintenance Data: For roofing specialties to include in maintenance manuals.

1.6 QUALITY ASSURANCE

A. Manufacturer Qualifications: A qualified manufacturer offering products meeting requirements that are SPRI ES-1 tested to specified design pressure.

1.7 DELIVERY, STORAGE, AND HANDLING

A. Do not store roof specialties in contact with other materials that might cause staining, denting, or other surface damage. Store roof specialties away from uncured concrete and masonry.

B. Protect strippable protective covering on roof specialties from exposure to sunlight and high humidity, except to extent necessary for the period of roof-specialty installation.

1.8 FIELD CONDITIONS

A. Field Measurements: Verify profiles and tolerances of roof-specialty substrates by field measurements before fabrication, and indicate measurements on Shop Drawings.

B. Coordination: Coordinate roof specialties with flashing, trim, and construction of parapets, roof deck, roof and wall panels, and other adjoining work to provide a leakproof, secure, and noncorrosive installation.

NOT FOR BIDDING PURPOSES

1.9 WARRANTY

A. Special Warranty on Painted Finishes: Manufacturer agrees to repair finish or replace roof specialties that show evidence of deterioration of factory-applied finishes within specified warranty period.

1. Fluoropolymer Finish: Deterioration includes, but is not limited to, the following:

a. Color fading more than 5 Hunter units when tested according to ASTM D 2244.
b. Chalking in excess of a No. 8 rating when tested according to ASTM D 4214.
c. Cracking, checking, peeling, or failure of paint to adhere to bare metal.

2. Finish Warranty Period: 20 years from date of Substantial Completion.

PART 2 - PRODUCTS

2.1 PERFORMANCE REQUIREMENTS

A. General Performance: Roof specialties shall withstand exposure to weather and resist thermally induced movement without failure, rattling, leaking, or fastener disengagement due to defective manufacture, fabrication, installation, or other defects in construction.

B. SPRI Wind Design Standard: Manufacture and install copings and roof-edge specialties tested according to SPRI ES-1 and capable of resisting the following design pressures:

1. Design Pressure: As indicated on Drawings.

C. Thermal Movements: Allow for thermal movements from ambient and surface temperature changes to prevent buckling, opening of joints, hole elongation, overstressing of components, failure of joint sealants, failure of connections, and other detrimental effects. Provide clips that resist rotation and avoid shear stress as a result of thermal movements. Base calculations on surface temperatures of materials due to both solar heat gain and nighttime-sky heat loss.

1. Temperature Change (Range): 120 deg F, ambient; 180 deg F, material surfaces.

2.2 COPINGS

A. Metal Copings: Manufactured coping system consisting of metal coping cap in section lengths not exceeding 12 feet, concealed anchorage; with corner units, end cap units, and concealed splice plates with finish matching coping caps.

1. Manufacturers: Subject to compliance with requirements, available manufacturers offering products that may be incorporated into the Work include, but are not limited to, the following:

a. Architectural Products Company.
b. ATAS International, Inc.
c. Drexel Metals.
d. OMG EdgeSystems (formerly, W.P. Hickman).
e. Metal-Era, Inc.
f. Perimeter Systems; a division of SAF.
g. Petersen Aluminum Corporation.

NOT FOR BIDDING PURPOSES

2. Formed Aluminum Sheet Coping Caps: Aluminum sheet, thickness as required to meet performance requirements.

a. Surface: Smooth, flat finish.
b. Finish: Two-coat fluoropolymer.
c. Color: As selected by Architect from manufacturer's full range.

1. Corners: Factory mitered and mechanically clinched and sealed watertight.
2. Coping-Cap Attachment Method: Snap-on, fabricated from coping-cap material.

a. Snap-on Coping Anchor Plates: Concealed, galvanized-steel sheet, 12 inches wide, with integral cleats.

2.3 ROOF-EDGE SPECIALTIES

A. Roof-Edge Fascia: Manufactured, two-piece, roof-edge fascia consisting of snap-on metal fascia cover in section lengths not exceeding 12 feet and a continuous metal receiver with integral drip-edge cleat to engage fascia cover and secure single-ply roof membrane. Provide matching corner units.

1. Manufacturers: Subject to compliance with requirements, available manufacturers offering products that may be incorporated into the Work include, but are not limited to, the following:

a. Architectural Products Company.
b. ATAS International, Inc.
c. Drexel Metals.
d. OMG EdgeSystems (formerly, W.P. Hickman).
e. Metal-Era, Inc.
f. Perimeter Systems; a division of SAF.
g. Petersen Aluminum Corporation.

2. Formed Aluminum Sheet Fascia Covers: Aluminum sheet, thickness as required to meet performance requirements.

a. Surface: Smooth, flat finish.
b. Finish: Two-coat fluoropolymer.
c. Color: As selected by Architect from manufacturer's full range.

1. Corners: Factory mitered and mechanically clinched and sealed watertight.
2. Splice Plates: Concealed, of same material, finish, and shape as fascia cover.
3. Receiver: Extruded aluminum, 0.080 inch thick.

B. One-Piece Gravel Stops: Manufactured, one-piece, metal gravel stop in section lengths not exceeding 12 feet, with a horizontal flange and vertical leg, drain-through fascia terminating in a drip edge, and concealed splice plates of same material, finish, and shape as gravel stop. Provide matching corner units.

1. Manufacturers: Subject to compliance with requirements, available manufacturers offering products that may be incorporated into the Work include, but are not limited to, the following:

a. Architectural Products Company.
b. ATAS International, Inc.
c. Drexel Metals.
d. OMG EdgeSystems (formerly, W.P. Hickman).
e. Metal-Era, Inc.

NOT FOR BIDDING PURPOSES

f. Perimeter Systems; a division of SAF.
g. Petersen Aluminum Corporation.

2. Formed Aluminum Sheet Gravel Stops: Aluminum sheet, thickness as required to meet performance requirements.

a. Surface: Smooth, flat finish.
b. Finish: Two-coat mica fluoropolymer.
c. Color: As selected by Architect from manufacturer's full range.

1. Corners: Factory mitered and mechanically clinched and sealed watertight.
2. Accessories: Fascia extenders with continuous hold-down cleats.

2.4 REGLETS AND COUNTERFLASHINGS

A. Manufacturers: Subject to compliance with requirements, available manufacturers offering products that may be incorporated into the Work include, but are not limited to, the following:

1. Drexel Metals.
2. Fry Reglet Corporation.
3. Heckmann Building Products, Inc.
4. OMG EdgeSystems (formerly, W.P. Hickman).
5. Keystone Flashing Company, Inc.
6. Metal-Era, Inc.

B. Reglets: Manufactured units formed to provide secure interlocking of separate reglet and counterflashing pieces, from the following exposed metal:

1. Formed Aluminum: 0.024 inch thick.
2. Stainless Steel: 0.019 inch thick.
3. Corners: Factory mitered and mechanically clinched and sealed watertight.
4. Surface-Mounted Type: Provide reglets with slotted holes for fastening to substrate, with neoprene or other suitable weatherproofing washers, and with channel for sealant at top edge.
5. Concrete Type, Embedded: Provide temporary closure tape to keep reglet free of concrete materials, special fasteners for attaching reglet to concrete forms, and guides to ensure alignment of reglet section ends.
6. Masonry Type, Embedded: Provide reglets with offset top flange for embedment in masonry mortar joint.
7. Multiuse Type, Embedded: For multiuse embedment in cast-in-place concrete and masonry mortar joints.

C. Counterflashings: Manufactured units of heights to overlap top edges of base flashings by 4 inches and in lengths not exceeding 12 feet designed to snap into reglets or through-wallflashing receiver and compress against base flashings with joints lapped, from the following exposed metal:

1. Formed Aluminum: 0.032 inch thick.
2. Stainless Steel: 0.025 inch thick.

D. Accessories:

NOT FOR BIDDING PURPOSES

1. Flexible-Flashing Retainer: Provide resilient plastic or rubber accessory to secure flexible flashing in reglet where clearance does not permit use of standard metal counterflashing or where reglet is provided separate from metal counterflashing.
2. Counterflashing Wind-Restraint Clips: Provide clips to be installed before counterflashing to prevent wind uplift of counterflashing lower edge.

E. Aluminum Finish: Two-coat fluoropolymer.

1. Color: As selected by Architect from manufacturer's full range.

F. Stainless-Steel Finish: No. 2B (bright, cold rolled, unpolished).

2.5 MATERIALS

A. Aluminum Sheet: ASTM B 209, alloy as standard with manufacturer for finish required, with temper to suit forming operations and performance required.

B. Aluminum Extrusions: ASTM B 221, alloy and temper recommended by manufacturer for type of use and finish indicated, finished as follows:

C. Stainless-Steel Sheet: ASTM A 240/A 240M or ASTM A 666, Type 304.

2.6 UNDERLAYMENT MATERIALS

A. Felt: ASTM D 226/D 226M, Type II (No. 30), asphalt-saturated organic felt, nonperforated.

2.7 MISCELLANEOUS MATERIALS

A. Fasteners: Manufacturer's recommended fasteners, suitable for application and designed to meet performance requirements. Furnish the following unless otherwise indicated:

1. Exposed Penetrating Fasteners: Gasketed screws with hex washer heads matching color of sheet metal.
2. Fasteners for Aluminum: Aluminum or Series 300 stainless steel.
3. Fasteners for Stainless-Steel Sheet: Series 300 stainless steel.

B. Elastomeric Sealant: ASTM C 920, elastomeric polyurethane polymer sealant of type, grade, class, and use classifications required by roofing-specialty manufacturer for each application.

C. Butyl Sealant: ASTM C 1311, single-component, solvent-release butyl rubber sealant; polyisobutylene plasticized; heavy bodied for hooked-type joints with limited movement.

D. Bituminous Coating: Cold-applied asphalt emulsion complying with ASTM D 1187/D 1187M.

E. Asphalt Roofing Cement: ASTM D 4586, asbestos free, of consistency required for application.

2.8 FINISHES

A. Comply with NAAMM's "Metal Finishes Manual for Architectural and Metal Products" for recommendations for applying and designating finishes.

NOT FOR BIDDING PURPOSES

B. Protect mechanical and painted finishes on exposed surfaces from damage by applying a strippable, temporary protective covering before shipping.

C. Appearance of Finished Work: Noticeable variations in same piece are unacceptable. Variations in appearance of adjoining components are acceptable if they are within the range of approved Samples and are assembled or installed to minimize contrast.

D. Coil-Coated Aluminum Sheet Finishes:

1. High-Performance Organic Finish: Prepare, pretreat, and apply coating to exposed metal surfaces to comply with coating and resin manufacturers' written instructions.

a. Two-Coat Fluoropolymer: AAMA 2605. Fluoropolymer finish containing not less than 70 percent PVDF resin by weight in color coat. Prepare, pretreat, and apply coating to exposed metal surfaces to comply with coating and resin manufacturers' written instructions.
b. Concealed Surface Finish: Apply pretreatment and manufacturer's standard acrylic or polyester backer finish consisting of prime coat and wash coat with a minimum total dry film thickness of 0.5 mil.

E. Aluminum Extrusion Finishes:

1. High-Performance Organic Finish: Prepare, pretreat, and apply coating to exposed metal surfaces to comply with coating and resin manufacturers' written instructions.

a. Two-Coat Fluoropolymer: AAMA 2605. Fluoropolymer finish containing not less than 70 percent PVDF resin by weight in color coat. Prepare, pretreat, and apply coating to exposed metal surfaces to comply with coating and resin manufacturers' written instructions.
b. Concealed Surface Finish: Apply pretreatment and manufacturer's standard acrylic or polyester backer finish consisting of prime coat and wash coat with a minimum total dry film thickness of 0.5 mil.

PART 3 - EXECUTION

3.1 EXAMINATION

A. Examine substrates, areas, and conditions, with Installer present, to verify actual locations, dimensions, and other conditions affecting performance of the Work.

B. Examine walls, roof edges, and parapets for suitable conditions for roof specialties.

C. Verify that substrate is sound, dry, smooth, clean, sloped for drainage where applicable, and securely anchored.

D. Proceed with installation only after unsatisfactory conditions have been corrected.

3.2 UNDERLAYMENT INSTALLATION

A. Felt Underlayment: Install with adhesive for temporary anchorage to minimize use of mechanical fasteners under roof specialties. Apply in shingle fashion to shed water, with lapped joints of not less than 2 inches.

NOT FOR BIDDING PURPOSES

3.3 INSTALLATION, GENERAL

A. General: Install roof specialties according to manufacturer's written instructions. Anchor roof specialties securely in place, with provisions for thermal and structural movement. Use fasteners, solder, protective coatings, separators, underlayments, sealants, and other miscellaneous items as required to complete roof-specialty systems.

1. Install roof specialties level, plumb, true to line and elevation; with limited oil-canning and without warping, jogs in alignment, buckling, or tool marks.
2. Provide uniform, neat seams with minimum exposure of solder and sealant.
3. Install roof specialties to fit substrates and to result in weathertight performance. Verify shapes and dimensions of surfaces to be covered before manufacture.
4. Torch cutting of roof specialties is not permitted.
5. Do not use graphite pencils to mark metal surfaces.

B. Metal Protection: Protect metals against galvanic action by separating dissimilar metals from contact with each other or with corrosive substrates by painting contact surfaces with bituminous coating or by other permanent separation as recommended by manufacturer.

1. Coat concealed side of uncoated aluminum and stainless-steel roof specialties with bituminous coating where in contact with wood, ferrous metal, or cementitious construction.
2. Bed flanges in thick coat of asphalt roofing cement where required by manufacturers of roof specialties for waterproof performance.

C. Expansion Provisions: Allow for thermal expansion of exposed roof specialties.

1. Space movement joints at a maximum of 12 feet with no joints within 18 inches of corners or intersections unless otherwise indicated on Drawings.
2. When ambient temperature at time of installation is between 40 and 70 deg F, set joint members for 50 percent movement each way. Adjust setting proportionately for installation at higher ambient temperatures.

D. Fastener Sizes: Use fasteners of sizes that penetrate substrate not less than recommended by fastener manufacturer to achieve maximum pull-out resistance.

E. Seal concealed joints with butyl sealant as required by roofing-specialty manufacturer.

F. Seal joints as required for weathertight construction. Place sealant to be completely concealed in joint. Do not install sealants at temperatures below 40 deg F.

3.4 COPING INSTALLATION

A. Install cleats, anchor plates, and other anchoring and attachment accessories and devices with concealed fasteners.

B. Anchor copings with manufacturer's required devices, fasteners, and fastener spacing to meet performance requirements.

1. Interlock face and back leg drip edges of snap-on coping cap into cleated anchor plates anchored to substrate at manufacturer's required spacing that meets performance requirements.

NOT FOR BIDDING PURPOSES

3.5 ROOF-EDGE SPECIALTIES INSTALLATION

A. Install cleats, cants, and other anchoring and attachment accessories and devices with concealed fasteners.

B. Anchor roof edgings with manufacturer's required devices, fasteners, and fastener spacing to meet performance requirements.

3.6 REGLET AND COUNTERFLASHING INSTALLATION

A. General: Coordinate installation of reglets and counterflashings with installation of base flashings.

B. Embedded Reglets: See Section 033000 "Cast-in-Place Concrete" and Section 042000 "Unit Masonry" for installation of reglets.

C. Surface-Mounted Reglets: Install reglets to receive flashings where flashing without embedded reglets is indicated on Drawings. Install at height so that inserted counterflashings overlap 4 inches over top edge of base flashings.

D. Counterflashings: Insert counterflashings into reglets or other indicated receivers; ensure that counterflashings overlap 4 inches over top edge of base flashings. Lap counterflashing joints a minimum of 4 inches and bed with butyl sealant. Fit counterflashings tightly to base flashings.

3.7 CLEANING AND PROTECTION

A. Clean exposed metal surfaces of substances that interfere with uniform oxidation and weathering.

B. Remove temporary protective coverings and strippable films as roof specialties are installed. On completion of installation, clean finished surfaces, including removing unused fasteners, metal filings, pop rivet stems, and pieces of flashing. Maintain roof specialties in a clean condition during construction.

C. Replace roof specialties that have been damaged or that cannot be successfully repaired by finish touchup or similar minor repair procedures.

END OF SECTION 07 71 00

NOT FOR BIDDING PURPOSES

THIS PAGE INTENTIONALLY LEFT BLANK

NOT FOR BIDDING PURPOSES

SECTION 07 72 00

ROOF ACCESSORIES

PART 1 - GENERAL

1.1 RELATED DOCUMENTS

A. Drawings and general provisions of the Contract, including General and Supplementary Conditions and Division 01 Specification Sections, apply to this Section.

1.2 SUMMARY

A. Section Includes:

1. Roof hatches.
2. Preformed flashing sleeves.

1.3 COORDINATION

A. Coordinate layout and installation of roof accessories with roofing membrane and base flashing and interfacing and adjoining construction to provide a leakproof, weathertight, secure, and noncorrosive installation.

B. Coordinate dimensions with rough-in information or Shop Drawings of equipment to be supported.

1.4 ACTION SUBMITTALS

A. Product Data: For each type of roof accessory.

1. Include construction details, material descriptions, dimensions of individual components and profiles, and finishes.

B. Shop Drawings: For roof accessories.

1. Include plans, elevations, keyed details, and attachments to other work. Indicate dimensions, loadings, and special conditions. Distinguish between plant-and field-assembled work.

C. Samples: For each exposed product and for each color and texture specified, prepared on Samples of size to adequately show color.

D. Delegated-Design Submittal: For roof curbs and equipment supports indicated to comply with performance requirements and design criteria, including analysis data signed and sealed by the qualified professional engineer responsible for their preparation.

1. Detail mounting, securing, and flashing of roof-mounted items to roof structure. Indicate coordinating requirements with roof membrane system.

NOT FOR BIDDING PURPOSES

1.5 INFORMATIONAL SUBMITTALS

A. Coordination Drawings: Roof plans, drawn to scale, and coordinating penetrations and roof-mounted items. Show the following:

1. Size and location of roof accessories specified in this Section.
2. Method of attaching roof accessories to roof or building structure.
3. Other roof-mounted items including mechanical and electrical equipment, ductwork, piping, and conduit.
4. Required clearances.

B. Sample Warranties: For manufacturer's special warranties.

1.6 CLOSEOUT SUBMITTALS

A. Operation and Maintenance Data: For roof accessories to include in operation and maintenance manuals.

1.7 WARRANTY

A. Special Warranty on Painted Finishes: Manufacturer's standard form in which manufacturer agrees to repair finishes or replace roof accessories that show evidence of deterioration of factory-applied finishes within specified warranty period.

1. Fluoropolymer Finish: Deterioration includes, but is not limited to, the following:

a. Color fading more than 5 Hunter units when tested according to ASTM D 2244.
b. Chalking in excess of a No. 8 rating when tested according to ASTM D 4214.
c. Cracking, checking, peeling, or failure of paint to adhere to bare metal.

2. Finish Warranty Period: 20 years from date of Substantial Completion.

PART 2 - PRODUCTS

2.1 PERFORMANCE REQUIREMENTS

A. General Performance: Roof accessories shall withstand exposure to weather and resist thermally induced movement without failure, rattling, leaking, or fastener disengagement due to defective manufacture, fabrication, installation, or other defects in construction.

B. Delegated Design: Engage a qualified professional engineer, as defined in Section 014000 "Quality Requirements," to design roof curbs and equipment supports to comply with wind performance requirements, including comprehensive engineering analysis by a qualified professional engineer, using performance requirements and design criteria indicated.

2.2 ROOF HATCH

A. Roof Hatches: Metal roof-hatch units with lids and insulated double-walled curbs, welded or mechanically fastened and sealed corner joints, continuous lid-to-curb counterflashing and weathertight perimeter gasketing, stepped integral metal cant raised the thickness of roof insulation, and integrally formed deck-mounting flange at perimeter bottom.

NOT FOR BIDDING PURPOSES

1. Basis of Design Product: Subject to compliance with requirements, provide Bilco Company; F-50, or comparable product by one of the following:

   a. Babcock-Davis.
   b. Dur-Red Products.

B. Type and Size: Single-leaf lid, 48 by 48 inches.

C. Loads: Minimum 40-lbf/sq. ft. external live load and 20-lbf/sq. ft. internal uplift load.

D. Hatch Material: Aluminum sheet.

1. Thickness: Manufacturer's standard thickness for hatch size indicated.
2. Finish: Baked enamel or powder coat.
3. Color: As selected by Architect from manufacturer's full range.

E. Construction:

1. Insulation: Glass-fiber board.

a. R-Value: 12.0 according to ASTM C 1363.

1. Hatch Lid: Opaque, insulated, and double walled, with manufacturer's standard metal liner of same material and finish as outer metal lid.
2. Curb Liner: Manufacturer's standard, of same material and finish as metal curb.
3. On ribbed or fluted metal roofs, form flange at perimeter bottom to conform to roof profile.
4. Fabricate curbs to minimum height of 12 inches above roofing surface unless otherwise indicated.

F. Hardware: Spring operators, hold-open arm, galvanized-steel spring latch with turn handles, stainless-steel butt-or pintle-type hinge system, and padlock hasps inside and outside.

1. Provide two-point latch on lids larger than 84 inches.

G. Safety Railing System: Roof-hatch manufacturer's standard system including rails, clamps, fasteners, safety barrier at railing opening, and accessories required for a complete installation; attached to roof hatch and complying with 29 CFR 1910.23 requirements and authorities having jurisdiction.

1. Height: 42 inches above finished roof deck.
2. Posts and Rails: Galvanized-steel pipe, 1-1/4 inches in diameter or galvanized-steel tube, 1-5/8 inches in diameter.
3. Flat Bar: Galvanized steel, 2 inches high by 3/8 inch thick.
4. Maximum Opening Size: System constructed to prevent passage of a sphere 21 inches in diameter.
5. Self-Latching Gate: Fabricated of same materials and rail spacing as safety railing system. Provide manufacturer's standard hinges and self-latching mechanism.
6. Post and Rail Tops and Ends: Weather resistant, closed or plugged with prefabricated end fittings.
7. Provide weep holes or another means to drain entrapped water in hollow sections of handrail and railing members.
8. Fabricate joints exposed to weather to be watertight.
9. Fasteners: Manufacturer's standard, finished to match railing system.
10. Finish: Manufacturer's standard.

NOT FOR BIDDING PURPOSES

a. Color: High visibility safety yellow.

H. Ladder-Assist Post: Roof-hatch manufacturer's standard device for attachment to roof-access ladder.

1. Operation: Post locks in place on full extension; release mechanism returns post to closed position.
2. Height: 42 inches above finished roof deck.
3. Material: Steel tube.
4. Post: 1-5/8-inch-diameter pipe.
5. Finish: Manufacturer's standard baked enamel or powder coat.

a. Color: As selected by Architect from manufacturer's full range.

2.3 PREFORMED FLASHING SLEEVES

A. Exhaust Vent Flashing: Double-walled metal flashing sleeve or boot, insulation filled, with integral deck flange, 12 inches high, with removable metal hood and slotted metal collar.

1. Manufacturers: Subject to compliance with requirements, provide products by one of the following:

a. Custom Solution Roof and Metal Products.
b. Menzies Metal Products.
c. Thaler Metal Industries Ltd.

1. Metal: Aluminum sheet, 0.063 inch thick.
2. Diameter: As indicated on Drawings.
3. Finish: Manufacturer's standard.

B. Vent Stack Flashing: Metal flashing sleeve, uninsulated, with integral deck flange.

1. Manufacturers: Subject to compliance with requirements, provide products by one of the following:

a. Custom Solution Roof and Metal Products.
b. Menzies Metal Products.
c. Milcor; Commercial Products Group of Hart & Cooley, Inc.
d. Thaler Metal Industries Ltd.

1. Metal: Aluminum sheet, 0.063 inch thick.
2. Height and Diameter: As indicated on Drawings.
3. Finish: Manufacturer's standard.

2.4 METAL MATERIALS

A. Zinc-Coated (Galvanized) Steel Sheet: ASTM A 653/A 653M, G90 coating designation.

1. Baked-Enamel or Powder-Coat Finish: After cleaning and pretreating, apply manufacturer's standard two-coat, baked-on finish consisting of prime coat and thermosetting topcoat to a minimum dry film thickness of 2 mils.
2. Concealed Finish: Pretreat with manufacturer's standard white or light-colored acrylic or polyester-backer finish consisting of prime coat and wash coat, with a minimum total dry film thickness of 0.5 mil.

NOT FOR BIDDING PURPOSES

B. Aluminum Sheet: ASTM B 209, manufacturer's standard alloy for finish required, with temper to suit forming operations and performance required.

1. Exposed Coil-Coated Finish: Prepare, pretreat, and apply coating to exposed metal surfaces to comply with coating and resin manufacturers' written instructions.

a. Two-Coat Fluoropolymer Finish: AAMA 2605. System consisting of primer and fluoropolymer color topcoat containing not less than 70 percent PVDF resin by weight.

2. Concealed Finish: Pretreat with manufacturer's standard white or light-colored acrylic or polyester-backer finish consisting of prime coat and wash coat, with a minimum total dry film thickness of 0.5 mil.

C. Aluminum Extrusions and Tubes: ASTM B 221, manufacturer's standard alloy and temper for type of use, finished to match assembly where used; otherwise mill finished.

D. Steel Shapes: ASTM A 36/A 36M, hot-dip galvanized according to ASTM A 123/A 123M unless otherwise indicated.

E. Steel Tube: ASTM A 500/A 500M, round tube.

F. Galvanized-Steel Tube: ASTM A 500/A 500M, round tube, hot-dip galvanized according to ASTM A 123/A 123M.

G. Steel Pipe: ASTM A 53/A 53M, galvanized.

2.5 MISCELLANEOUS MATERIALS

A. General: Provide materials and types of fasteners, protective coatings, sealants, and other miscellaneous items required by manufacturer for a complete installation.

B. Glass-Fiber Board Insulation: ASTM C 726, nominal density of 3 lb/cu. ft., thermal resistivity of 4.3 deg F x h x sq. ft./Btu x in. at 75 deg F, thickness as indicated.

C. Polyisocyanurate Board Insulation: ASTM C 1289, thickness and thermal resistivity as indicated.

D. Wood Nailers: As specified in Section 061000 "Rough Carpentry."

E. Bituminous Coating: Cold-applied asphalt emulsion complying with ASTM D 1187/D 1187M.

F. Underlayment:

1. Felt: ASTM D 226/D 226M, Type II (No. 30), asphalt-saturated organic felt, nonperforated.
2. Fasteners: Roof accessory manufacturer's recommended fasteners suitable for application and metals being fastened. Match finish of exposed fasteners with finish of material being fastened. Provide nonremovable fastener heads to exterior exposed fasteners. Furnish the following unless otherwise indicated:

NOT FOR BIDDING PURPOSES

G. Gaskets: Manufacturer's standard tubular or fingered design of neoprene, EPDM, PVC, or silicone or a flat design of foam rubber, sponge neoprene, or cork.

H. Elastomeric Sealant: ASTM C 920, elastomeric polymer sealant as recommended by roof accessory manufacturer for installation indicated; low modulus; of type, grade, class, and use classifications required to seal joints and remain watertight.

I. Butyl Sealant: ASTM C 1311, single-component, solvent-release butyl rubber sealant; polyisobutylene plasticized; heavy bodied for expansion joints with limited movement.

J. Asphalt Roofing Cement: ASTM D 4586/D 4586M, asbestos free, of consistency required for application.

2.6 GENERAL FINISH REQUIREMENTS

A. Comply with NAAMM's "Metal Finishes Manual for Architectural and Metal Products" for recommendations for applying and designating finishes.

B. Appearance of Finished Work: Noticeable variations in same piece are not acceptable. Variations in appearance of adjoining components are acceptable if they are within the range of approved Samples and are assembled or installed to minimize contrast.

PART 3 - EXECUTION

3.1 EXAMINATION

A. Examine substrates, areas, and conditions, with Installer present, to verify actual locations, dimensions, and other conditions affecting performance of the Work.

B. Verify that substrate is sound, dry, smooth, clean, sloped for drainage, and securely anchored.

C. Verify dimensions of roof openings for roof accessories.

D. Proceed with installation only after unsatisfactory conditions have been corrected.

3.2 INSTALLATION

A. General: Install roof accessories according to manufacturer's written instructions.

1. Install roof accessories level; plumb; true to line and elevation; and without warping, jogs in alignment, buckling, or tool marks.
2. Anchor roof accessories securely in place so they are capable of resisting indicated loads.
3. Use fasteners, separators, sealants, and other miscellaneous items as required to complete installation of roof accessories and fit them to substrates.
4. Install roof accessories to resist exposure to weather without failing, rattling, leaking, or loosening of fasteners and seals.

B. Metal Protection: Protect metals against galvanic action by separating dissimilar metals from contact with each other or with corrosive substrates by painting contact surfaces with bituminous coating or by other permanent separation as recommended by manufacturer.

NOT FOR BIDDING PURPOSES

1. Coat concealed side of uncoated aluminum roof accessories with bituminous coating where in contact with wood, ferrous metal, or cementitious construction.
2. Underlayment: Where installing roof accessories directly on cementitious or wood substrates, install a course of underlayment and cover with manufacturer's recommended slip sheet.
3. Bed flanges in thick coat of asphalt roofing cement where required by manufacturers of roof accessories for waterproof performance.

C. Roof Curb Installation: Install each roof curb so top surface is level.

D. Equipment Support Installation: Install equipment supports so top surfaces are level with each other.

E. Roof-Hatch Installation:

1. Verify that roof hatch operates properly. Clean, lubricate, and adjust operating mechanism and hardware.
2. Attach safety railing system to roof-hatch curb.
3. Attach ladder-assist post according to manufacturer's written instructions.

F. Preformed Flashing-Sleeve Installation: Secure flashing sleeve to roof membrane according to flashing-sleeve manufacturer's written instructions; flash sleeve flange to surrounding roof membrane according to roof membrane manufacturer's instructions.

3.3 REPAIR AND CLEANING

A. Galvanized Surfaces: Clean field welds, bolted connections, and abraded areas and repair galvanizing according to ASTM A 780/A 780M.

B. Touch up factory-primed surfaces with compatible primer ready for field painting according to Section 099113 "Exterior Painting."

C. Clean exposed surfaces according to manufacturer's written instructions.

D. Clean off excess sealants.

E. Replace roof accessories that have been damaged or that cannot be successfully repaired by finish touchup or similar minor repair procedures.

END OF SECTION 07 72 00

NOT FOR BIDDING PURPOSES

THIS PAGE INTENTIONALLY LEFT BLANK

NOT FOR BIDDING PURPOSES

SECTION 07 84 13

PENETRATION FIRESTOPPING

NOT FOR BIDDING PURPOSES

PART 1 - GENERAL

1.1 RELATED DOCUMENTS

A. Drawings and general provisions of the Contract, including General and Supplementary Conditions and Division 01 Specification Sections, apply to this Section.

1.2 SUMMARY

A. Section Includes:

1. Penetrations in fire-resistance-rated walls.
2. Penetrations in horizontal assemblies.
3. Penetrations in smoke barriers.

1.3 PREINSTALLATION MEETINGS

A. Preinstallation Conference: Conduct conference at Project site.

1.4 ACTION SUBMITTALS

A. Product Data: For each type of product.

B. Product Schedule: For each penetration firestopping system. Include location, illustration of firestopping system, and design designation of qualified testing and inspecting agency.

1. Engineering Judgments: Where Project conditions require modification to a qualified testing and inspecting agency's illustration for a particular penetration firestopping system, submit illustration, with modifications marked, approved by penetration firestopping system manufacturer's fire-protection engineer as an engineering judgment or equivalent fire-resistance-rated assembly. Obtain approval of authorities having jurisdiction prior to submittal.

1.5 INFORMATIONAL SUBMITTALS

A. Qualification Data: For Installer.

B. Product Test Reports: For each penetration firestopping system, for tests performed by a qualified testing agency.

1.6 CLOSEOUT SUBMITTALS

A. Installer Certificates: From Installer indicating that penetration firestopping systems have been installed in compliance with requirements and manufacturer's written instructions.

1.7 QUALITY ASSURANCE

A. Installer Qualifications: A firm that has been approved by FM Global according to FM Global 4991, "Approval of Firestop Contractors," or been evaluated by UL and found to comply with its "Qualified Firestop Contractor Program Requirements."

1.8 PROJECT CONDITIONS

A. Environmental Limitations: Do not install penetration firestopping system when ambient or substrate temperatures are outside limits permitted by penetration firestopping system manufacturers or when substrates are wet because of rain, frost, condensation, or other causes.

B. Install and cure penetration firestopping materials per manufacturer's written instructions using natural means of ventilations or, where this is inadequate, forced-air circulation.

1.9 COORDINATION

A. Coordinate construction of openings and penetrating items to ensure that penetration firestopping systems can be installed according to specified firestopping system design.

B. Coordinate sizing of sleeves, openings, core-drilled holes, or cut openings to accommodate penetration firestopping systems.

PART 2 - PRODUCTS

2.1 PERFORMANCE REQUIREMENTS

A. Fire-Test-Response Characteristics:

1. Perform penetration firestopping system tests by a qualified testing agency acceptable to authorities having jurisdiction.
2. Test per testing standards referenced in "Penetration Firestopping Systems" Article. Provide rated systems complying with the following requirements:

a. Penetration firestopping systems shall bear classification marking of a qualified testing agency.

1) UL in its "Fire Resistance Directory."
2) Intertek Group in its "Directory of Listed Building Products."
3) FM Global in its "Building Materials Approval Guide."

NOT FOR BIDDING PURPOSES

2.2 PENETRATION FIRESTOPPING SYSTEMS

A. Penetration Firestopping Systems: Systems that resist spread of fire, passage of smoke and other gases, and maintain original fire-resistance rating of construction penetrated. Penetration firestopping systems shall be compatible with one another, with the substrates forming openings, and with penetrating items if any.

1. Manufacturers: Subject to compliance with requirements, available manufacturers offering products that may be incorporated into the Work include, but are not limited to the following:

a. 3M Fire Protection Products.
b. GCP Applied Technologies.
c. Hilti, Inc.
d. Nelson Firestop Products.
e. NUCO Inc.
f. Passive Fire Protection Partners.
g. RectorSeal.
h. Specified Technologies, Inc.
i. Tremco, Inc.

B. Penetrations in Fire-Resistance-Rated Walls: Penetration firestopping systems with ratings determined per ASTM E 814 or UL 1479, based on testing at a positive pressure differential of 0.01-inch wg.

1. F-Rating: Not less than the fire-resistance rating of constructions penetrated.

C. Penetrations in Horizontal Assemblies: Penetration firestopping systems with ratings determined per ASTM E 814 or UL 1479, based on testing at a positive pressure differential of 0.01-inch wg.

1. F-Rating: At least one hour, but not less than the fire-resistance rating of constructions penetrated.
2. T-Rating: At least one hour, but not less than the fire-resistance rating of constructions penetrated except for floor penetrations within the cavity of a wall.
3. W-Rating: Provide penetration firestopping systems showing no evidence of water leakage when tested according to UL 1479.

D. Penetrations in Smoke Barriers: Penetration firestopping systems with ratings determined per UL 1479, based on testing at a positive pressure differential of 0.30-inch wg.

1. L-Rating: Not exceeding 5.0 cfm/sq. ft. of penetration opening at and no more than 50cfm cumulative total for any 100 sq. ft. at both ambient and elevated temperatures.

E. Exposed Penetration Firestopping Systems: Flame-spread and smoke-developed indexes of less than 25 and 450, respectively, per ASTM E 84.

F. Accessories: Provide components for each penetration firestopping system that are needed to install fill materials and to maintain ratings required. Use only those components specified by penetration firestopping system manufacturer and approved by qualified testing and inspecting agency for conditions indicated.

1. Permanent forming/damming/backing materials.
2. Substrate primers.
3. Collars.
4. Steel sleeves.

NOT FOR BIDDING PURPOSES

2.3 FILL MATERIALS

A. Cast-in-Place Firestop Devices: Factory-assembled devices for use in cast-in-place concrete floors and consisting of an outer sleeve lined with an intumescent strip, a flange attached to one end of the sleeve for fastening to concrete formwork, and a neoprene gasket.

B. Latex Sealants: Single-component latex formulations that do not re-emulsify after cure during exposure to moisture.

C. Firestop Devices: Factory-assembled collars formed from galvanized steel and lined with intumescent material sized to fit specific diameter of penetrant.

D. Intumescent Composite Sheets: Rigid panels consisting of aluminum-foil-faced intumescent elastomeric sheet bonded to galvanized-steel sheet.

E. Intumescent Putties: Nonhardening, water-resistant, intumescent putties containing no solvents or inorganic fibers.

F. Intumescent Wrap Strips: Single-component intumescent elastomeric sheets with aluminum foil on one side.

G. Mortars: Prepackaged dry mixes consisting of a blend of inorganic binders, hydraulic cement, fillers and lightweight aggregate formulated for mixing with water at Project site to form a nonshrinking, homogeneous mortar.

H. Pillows/Bags: Reusable heat-expanding pillows/bags consisting of glass-fiber cloth cases filled with a combination of mineral-fiber, water-insoluble expansion agents, and fire-retardant additives. Where exposed, cover openings with steel-reinforcing wire mesh to protect pillows/bags from being easily removed.

I. Silicone Foams: Multicomponent, silicone-based liquid elastomers that, when mixed, expand and cure in place to produce a flexible, nonshrinking foam.

J. Silicone Sealants: Single-component, silicone-based, neutral-curing elastomeric sealants.

2.4 MIXING

A. Penetration Firestopping Materials: For those products requiring mixing before application, comply with penetration firestopping system manufacturer's written instructions for accurate proportioning of materials, water (if required), type of mixing equipment, selection of mixer speeds, mixing containers, mixing time, and other items or procedures needed to produce products of uniform quality with optimum performance characteristics for application indicated.

PART 3 - EXECUTION

3.1 EXAMINATION

A. Examine substrates and conditions, with Installer present, for compliance with requirements for opening configurations, penetrating items, substrates, and other conditions affecting performance of the Work.

B. Proceed with installation only after unsatisfactory conditions have been corrected.

3.2 PREPARATION

NOT FOR BIDDING PURPOSES

A. Surface Cleaning: Before installing penetration firestopping systems, clean out openings immediately to comply with manufacturer's written instructions and with the following requirements:

1. Remove from surfaces of opening substrates and from penetrating items foreign materials that could interfere with adhesion of penetration firestopping materials.
2. Clean opening substrates and penetrating items to produce clean, sound surfaces capable of developing optimum bond with penetration firestopping materials. Remove loose particles remaining from cleaning operation.
3. Remove laitance and form-release agents from concrete.

B. Prime substrates where recommended in writing by manufacturer using that manufacturer's recommended products and methods. Confine primers to areas of bond; do not allow spillage and migration onto exposed surfaces.

3.3 INSTALLATION

A. General: Install penetration firestopping systems to comply with manufacturer's written installation instructions and published drawings for products and applications.

B. Install forming materials and other accessories of types required to support fill materials during their application and in the position needed to produce cross-sectional shapes and depths required to achieve fire ratings.

1. After installing fill materials and allowing them to fully cure, remove combustible forming materials and other accessories not forming permanent components of firestopping.

C. Install fill materials by proven techniques to produce the following results:

1. Fill voids and cavities formed by openings, forming materials, accessories and penetrating items to achieve required fire-resistance ratings.
2. Apply materials so they contact and adhere to substrates formed by openings and penetrating items.
3. For fill materials that will remain exposed after completing the Work, finish to produce smooth, uniform surfaces that are flush with adjoining finishes.

3.4 IDENTIFICATION

A. Wall Identification: Permanently label walls containing penetration firestopping systems with the words "FIRE AND/OR SMOKE BARRIER -PROTECT ALL OPENINGS," using lettering not less than 3 inches high and with minimum 0.375-inch strokes.

1. Locate in accessible concealed floor, floor-ceiling, or attic space at 15 feet from end of wall and at intervals not exceeding 30 feet.

B. Penetration Identification: Identify each penetration firestopping system with legible metal or plastic labels. Attach labels permanently to surfaces adjacent to and within 6 inches of penetration firestopping system edge so labels are visible to anyone seeking to remove penetrating items or firestopping systems. Use mechanical fasteners or self-adhering-type labels with adhesives capable of permanently bonding labels to surfaces on which labels are
placed. Include the following information on labels:

1. The words "Warning -Penetration Firestopping -Do Management of Any Damage."
2. Contractor's name, address, and phone number.
3. Designation of applicable testing and inspecting agency.
4. Date of installation.

NOT FOR BIDDING PURPOSES

5. Manufacturer's name.
6. Installer's name.

3.5 FIELD QUALITY CONTROL

A. Owner will engage a qualified testing agency to perform tests and inspections according to ASTM E 2174.

B. Where deficiencies are found or penetration firestopping system is damaged or removed because of testing, repair or replace penetration firestopping system to comply with requirements.

C. Proceed with enclosing penetration firestopping systems with other construction only after inspection reports are issued and installations comply with requirements.

3.6 CLEANING AND PROTECTION

A. Clean off excess fill materials adjacent to openings as the Work progresses by methods and with cleaning materials that are approved in writing by penetration firestopping system manufacturers and that do not damage materials in which openings occur.

B. Provide final protection and maintain conditions during and after installation that ensure that penetration firestopping systems are without damage or deterioration at time of Substantial Completion. If, despite such protection, damage or deterioration occurs, immediately cut out and remove damaged or deteriorated penetration firestopping material and install new materials to produce systems complying with specified requirements.

3.7 PENETRATION FIRESTOPPING SYSTEM SCHEDULE

A. Where UL-classified systems are indicated, they refer to system numbers in UL's "Fire Resistance Directory" under product Category XHEZ.

END OF SECTION 07 84 13

NOT FOR BIDDING PURPOSES

NOT FOR BIDDING PURPOSES

SECTION 07 91 00

PREFORMED JOINT SEALS

PART 1 - GENERAL

1.1 RELATED DOCUMENTS

A. Drawings and general provisions of the Contract, including General and Supplementary Conditions and Division 01 Specification Sections, apply to this Section.

1.2 SUMMARY

A. Section Includes:

1. Preformed, foam joint seals.
2. Precured, extruded-silicone joint seals.

1.3 ACTION SUBMITTALS

A. Product Data: For each preformed joint seal product.

B. Samples for Initial Selection: Manufacturer's color charts showing the full range of colors available for each product exposed to view.

C. Samples for Verification: For each type and color of preformed joint seal required, provide Samples with joint seals in 1/2-inch-wide joints formed between two 6-inch-long strips of material matching the appearance of exposed surfaces adjacent to joint seals.

D. Preformed Joint Seal Schedule: Include the following information:

1. Joint seal location and designation.
2. Joint width and movement capability.
3. Joint seal manufacturer and product name.
4. Joint seal color.

1.4 INFORMATIONAL SUBMITTALS

A. Product Test Reports: For each preformed joint seal for tests performed by manufacturer and witnessed by a qualified testing agency.

B. Warranties: For special warranties.

1.5 QUALITY ASSURANCE

A. Mockups: Install mockups of assemblies specified in other Sections that are indicated to receive

preformed joint seals specified in this Section. Use materials and installation methods specified in this Section.

1.6 WARRANTY

A. Special Warranty: Installer agrees to repair or replace preformed joint seals that do not comply with performance and other requirements specified in this Section within specified warranty period.

1. Warranty Period: Two years from date of Substantial Completion.

B. Special Manufacturer's Warranty: Manufacturer agrees to furnish preformed joint seals to repair or replace those that do not comply with performance and other requirements specified in this Section within specified warranty period.

1. Warranty Period: Five years from date of Substantial Completion.

PART 2 - PRODUCTS

2.1 PREFORMED, FOAM JOINT SEALS

A. Preformed, Foam Joint Seals: Manufacturer's standard joint seal manufactured from urethane or EVA (ethylene vinyl acetate) foam with minimum density of 10 lb/cu. ft. and impregnated with a nondrying, water-repellent agent. Factory produce in precompressed sizes in roll or stick form to fit joint widths based on design criteria indicated, with factory-or field-applied adhesive for bonding to substrates.

1. Manufacturers: Subject to compliance with requirements, available manufacturers offering products that may be incorporated into the Work include, but are not limited to the following:

a. Balco, Inc.
b. Consruction Specialties, Inc.
c. EMSEAL Joint Systems, Ltd.
d. InPro Corporation (IPC).
e. MM Systems Corporation.
f. Nystrom, Inc.

2. Design Criteria:

a. Nominal Joint Width: As indicated on Drawings.

3. Joint Seal Color: As selected by Architect from full range of industry colors.

2.2 EXTRUDED-SILICONE JOINT SEALS

A. Extruded-Silicone Joint Seals: Manufacturer's standard seal consisting of precured low-modulus silicone extrusion, with a neutral-curing silicone sealant for bonding extrusions to substrates.

1. Manufacturers: Subject to compliance with requirements, available manufacturers offering products that may be incorporated into the Work include, but are not limited to the following:

a. Dow Corning Corporation.

NOT FOR BIDDING PURPOSES

b. GE Construction Sealants; Momentive Performance Materials Inc.
c. May National Associates, Inc.; a subsidiary of Sika Corporation.
d. Pecora Corporation.
e. Sealex, Inc.
f. Sika Corporation; Joint Sealants.
g. Tremco Incorporated.

2. Joint Seal Width: Joint size indicated on Drawings plus 1 inch.
3. Joint Seal Color: As selected by Architect from full range of industry colors.

2.3 MISCELLANEOUS MATERIALS

A. Primer: Material recommended by preformed-joint-seal manufacturer for joint substrates indicated.

B. Cleaners for Nonporous Surfaces: Chemical cleaners acceptable to preformed joint seal manufacturer, free of oily residues or other substances capable of staining or harming joint substrates and adjacent nonporous surfaces, and formulated to promote best adhesion to joint substrates.

C. Masking Tape: Nonstaining, nonabsorbent material compatible with preformed joint seals and surfaces adjacent to joints.

PART 3 - EXECUTION

3.1 EXAMINATION

A. Examine joints indicated to receive preformed joint seals, with Installer present, for compliance with requirements for joint configuration, installation tolerances, and other conditions affecting preformed-joint seal performance.

B. Proceed with installation only after unsatisfactory conditions have been corrected.

3.2 PREPARATION

A. Surface Cleaning of Joints: Clean out joints immediately before installing preformed joint seals to comply with preformed joint seal manufacturer's written instructions and the following requirements:

1. Remove all foreign material from joint substrates that could interfere with adhesion of preformed joint seal, including dust, paints (except for permanent protective coatings tested and approved for seal adhesion and compatibility by seal manufacturer), old joint sealants, oil, grease, waterproofing, water repellents, water, surface dirt, and frost.
2. Clean porous joint substrate surfaces by brushing, grinding, mechanical abrading, or a combination of these methods to produce a clean, sound substrate capable of developing optimal bond with preformed joint seals. Remove loose particles remaining after cleaning operations above by vacuuming or blowing out joints with oil-free compressed air. Porous joint substrates include the following:

a. Concrete.
b. Masonry.
c. Exterior insulation and finish systems.

NOT FOR BIDDING PURPOSES

3. Remove laitance and form-release agents from concrete.
4. Clean nonporous joint substrate surfaces with chemical cleaners or other means that do not stain, harm substrates, or leave residues capable of interfering with adhesion of joint seals. Nonporous joint substrates include the following:

   a. Metal.
   b. Glass.

B. Joint Priming: Prime joint substrates where recommended by preformed joint seal manufacturer or as indicated by tests or prior experience. Apply primer to comply with joint seal manufacturer's written instructions. Confine primers to areas of joint seal bond; do not allow spillage or migration onto adjoining surfaces.

C. Masking Tape: Use masking tape where required to prevent contact of adhesive or primer with adjoining surfaces that otherwise would be permanently stained or damaged by such contact or by cleaning methods required to remove smears. Remove tape immediately after tooling without disturbing joint seal.

3.3 INSTALLATION

A. General: Comply with preformed joint seal manufacturer's written installation instructions for products and applications indicated unless more stringent requirements apply.

B. Installation of Preformed, Foam Joint Seals:

1. Install each length of seal immediately after removing protective wrapping.
2. Firmly secure compressed joint seals to joint gap side to obtain full bond using exposed pressure-sensitive adhesive or field-applied adhesive as recommended by manufacturer.
3. Do not pull or stretch material. Produce seal continuity at splices, ends, turns, and intersections of joints.
4. For applications at low ambient temperatures, heat foam joint seal material in compliance with manufacturer's written instructions.

C. Installation of Precured, Extruded-Silicone Joint Seals:

1. Apply masking tape to each side of joint, outside of area to be covered by seal system.
2. Apply silicone sealant to each side of joint to produce a bead of size complying with preformed silicone seal system manufacturer's written instructions and covering a bonding area of not less than 3/8 inch. Hold edge of sealant bead 1/4 inch inside masking tape.
3. Press silicone extrusion into sealant to wet extrusion and substrate. Use a roller to apply consistent pressure and ensure uniform contact with substrate.
4. Complete installation of seal system in horizontal joints before installing in vertical joints. Lap vertical joints over horizontal joints. At ends of joints, cut silicone extrusion with a razor knife.

3.4 PROTECTION

A. Protect preformed joint seals from damage resulting from construction operations or other causes so seals are without deterioration or damage at time of Substantial Completion. If, despite such protection, damage or deterioration occurs, cut out, remove, and repair damaged or deteriorated seals immediately so installations with repaired areas are indistinguishable from original work.

END OF SECTION 07 91 00

NOT FOR BIDDING PURPOSES

NOT FOR BIDDING PURPOSES

SECTION 07 92 00

JOINT SEALANTS

PART 1 - GENERAL

1.1 RELATED DOCUMENTS

A. Drawings and general provisions of the Contract, including General and Supplementary Conditions and Division 01 Specification Sections, apply to this Section.

1.2 SUMMARY

A. Section Includes:

1. Silicone joint sealants for exterior use.
2. Urethane joint sealants for interior use.
3. Latex joint sealants.

1.3 PREINSTALLATION MEETINGS

A. Preinstallation Conference: Conduct conference at Project site.

1.4 ACTION SUBMITTALS

A. Product Data: For each joint-sealant product.

B. Samples for Initial Selection: Manufacturer's color charts consisting of strips of cured sealants showing the full range of colors available for each product exposed to view.

C. Samples for Verification: For each kind and color of joint sealant required, provide Samples with joint sealants in 1/2-inch-wide joints formed between two 6-inch-long strips of material matching the appearance of exposed surfaces adjacent to joint sealants.

D. Joint-Sealant Schedule: Include the following information:

1. Joint-sealant application, joint location, and designation.
2. Joint-sealant manufacturer and product name.
3. Joint-sealant formulation.
4. Joint-sealant color.

1.5 INFORMATIONAL SUBMITTALS

A. Qualification Data: For qualified Installer and testing agency.

B. Product Test Reports: For each kind of joint sealant, for tests performed by manufacturer and witnessed

by a qualified testing agency.

A. Preconstruction Field-Adhesion Test Reports: Indicate which sealants and joint preparation methods resulted in optimum adhesion to joint substrates based on testing specified in "Preconstruction Testing" Article.

D. Field-Adhesion Test Reports: For each sealant application tested.

E. Warranties: Sample of special warranties.

1.6 QUALITY ASSURANCE

A. Installer Qualifications: An authorized representative who is trained and approved by manufacturer.

B. Product Testing: Test joint sealants using a qualified testing agency.

1. Testing Agency Qualifications: An independent testing agency qualified according to ASTM C 1021 to conduct the testing indicated.

C. Mockups: Install sealant in mockups of assemblies specified in other Sections that are indicated to receive joint sealants specified in this Section. Use materials and installation methods specified in this Section.

1.7 FIELD CONDITIONS

A. Do not proceed with installation of joint sealants under the following conditions:

1. When ambient and substrate temperature conditions are outside limits permitted by joint-sealant manufacturer.
2. When joint substrates are wet.
3. Where joint widths are less than those allowed by joint-sealant manufacturer for applications indicated.
4. Where contaminants capable of interfering with adhesion have not yet been removed from joint substrates.

1.8 WARRANTY

A. Special Installer's Warranty: Manufacturer's standard form in which Installer agrees to repair or replace joint sealants that do not comply with performance and other requirements specified in this Section within specified warranty period.

1. Warranty Period: Two years from date of Substantial Completion.

B. Special warranties specified in this article exclude deterioration or failure of joint sealants from the following:

1. Movement of the structure caused by structural settlement or errors attributable to design or construction resulting in stresses on the sealant exceeding sealant manufacturer's written specifications for sealant elongation and compression.
2. Disintegration of joint substrates from natural causes exceeding design specifications.
3. Mechanical damage caused by individuals, tools, or other outside agents.

NOT FOR BIDDING PURPOSES

4. Changes in sealant appearance caused by accumulation of dirt or other atmospheric contaminants.

PART 2 - PRODUCTS

2.1 JOINT SEALANTS, GENERAL

A. Compatibility: Provide joint sealants, backings, and other related materials that are compatible with one another and with joint substrates under conditions of service and application, as demonstrated by joint-sealant manufacturer, based on testing and field experience.

B. Colors of Exposed Joint Sealants: As selected by Architect from manufacturer's full range.

2.2 NONSTAINING SILICONE JOINT SEALANTS – General Exterior

A. Nonstaining Joint Sealants: No staining of substrates when tested according to ASTM C 1248.

B. Silicone, Nonstaining, S, NS, 50, NT: Nonstaining, single-component, nonsag, plus 50 percent and minus 50 percent movement capability, nontraffic-use, neutral-curing silicone joint sealant; ASTM C 920, Type S, Grade NS, Class 50, Use NT.

1. Manufacturers: Subject to compliance with requirements, available manufacturers offering products that may be incorporated into the Work include, but are not limited to the following:

a. Dow Corning Corporation.
b. GE Construction Sealants; Momentive Performance Materials Inc.
c. Pecora Corporation.
d. Sika Corporation; Joint Sealants.
e. Tremco Incorporated.

2.3 URETHANE JOINT SEALANTS – General Interior

A. Urethane, Immersible, S, NS, 25, T, NT, I: Immersible, single-component, nonsag, plus 25 percent and minus 25 percent movement capability, traffic-and nontraffic-use, urethane joint sealant; ASTM C 920, Type S, Grade NS, Class 25, Uses T, NT, and I.

1. Manufacturers: Subject to compliance with requirements, available manufacturers offering products that may be incorporated into the Work include, but are not limited to the following:

a. BASF Corp. -Construction Chemicals.
b. Pecora Corporation.
c. Tremco Incorporated.

2.4 LATEX JOINT SEALANTS – General Interior

A. Acrylic Latex: Acrylic latex or siliconized acrylic latex, ASTM C 834, Type OP, Grade NF.

1. Manufacturers: Subject to compliance with requirements, available manufacturers offering products that may be incorporated into the Work include, but are not limited to the following:

a. Pecora Corporation.
b. Sherwin-Williams Company (The).
c. Tremco Incorporated.

NOT FOR BIDDING PURPOSES

2.5 JOINT SEALANT BACKING

A. Sealant Backing Material, General: Nonstaining; compatible with joint substrates, sealants, primers, and other joint fillers; and approved for applications indicated by sealant manufacturer based on field experience and laboratory testing.

1. Manufacturers: Subject to compliance with requirements, available manufacturers offering products that may be incorporated into the Work include, but are not limited to the following:

a. Adfast.
b. Alcot Plastics Ltd.
c. BASF Corp. -Construction Chemicals.
d. Construction Foam Products; a division of Nomaco, Inc.

B. Cylindrical Sealant Backings: ASTM C 1330, Type C (closed-cell material with a surface skin), Type O (open-cell material), Type B (bicellular material with a surface skin), or any of the preceding types, as approved in writing by joint-sealant manufacturer for joint application indicated, and of size and density to control sealant depth and otherwise contribute to producing optimum sealant performance.

C. Bond-Breaker Tape: Polyethylene tape or other plastic tape recommended by sealant manufacturer for preventing sealant from adhering to rigid, inflexible joint-filler materials or joint surfaces at back of joint. Provide self-adhesive tape where applicable.

2.6 MISCELLANEOUS MATERIALS

A. Primer: Material recommended by joint-sealant manufacturer where required for adhesion of sealant to joint substrates indicated, as determined from preconstruction joint-sealant-substrate tests and field tests.

B. Cleaners for Nonporous Surfaces: Chemical cleaners acceptable to manufacturers of sealants and sealant backing materials, free of oily residues or other substances capable of staining or harming joint substrates and adjacent nonporous surfaces in any way, and formulated to promote optimum adhesion of sealants to joint substrates.

C. Masking Tape: Nonstaining, nonabsorbent material compatible with joint sealants and surfaces adjacent to joints.

PART 3 - EXECUTION

3.1 EXAMINATION

A. Examine joints indicated to receive joint sealants, with Installer present, for compliance with requirements for joint configuration, installation tolerances, and other conditions affecting performance of the Work.

B. Proceed with installation only after unsatisfactory conditions have been corrected.

NOT FOR BIDDING PURPOSES

3.2 PREPARATION

A. Surface Cleaning of Joints: Clean out joints immediately before installing joint sealants to comply with joint-sealant manufacturer's written instructions and the following requirements:

1. Remove all foreign material from joint substrates that could interfere with adhesion of joint sealant, including dust, paints (except for permanent, protective coatings tested and approved for sealant adhesion and compatibility by sealant manufacturer), old joint sealants, oil, grease, waterproofing, water repellents, water, surface dirt, and frost.
2. Clean porous joint substrate surfaces by brushing, grinding, mechanical abrading, or a combination of these methods to produce a clean, sound substrate capable of developing optimum bond with joint sealants. Remove loose particles remaining after cleaning operations above by vacuuming or blowing out joints with oil-free compressed air. Porous joint substrates include the following:

   a. Concrete.
   b. Masonry.
   c. Unglazed surfaces of ceramic tile.

3. Remove laitance and form-release agents from concrete.
4. Clean nonporous joint substrate surfaces with chemical cleaners or other means that do not stain, harm substrates, or leave residues capable of interfering with adhesion of joint sealants. Nonporous joint substrates include the following:

   a. Metal.
   b. Glass.
   c. Glazed surfaces of ceramic tile.

B. Joint Priming: Prime joint substrates where recommended by joint-sealant manufacturer or as indicated by preconstruction joint-sealant-substrate tests or prior experience. Apply primer to comply with joint-sealant manufacturer's written instructions. Confine primers to areas of joint-sealant bond; do not allow spillage or migration onto adjoining surfaces.

C. Masking Tape: Use masking tape where required to prevent contact of sealant or primer with adjoining surfaces that otherwise would be permanently stained or damaged by such contact or by cleaning methods required to remove sealant smears. Remove tape immediately after tooling without disturbing joint seal.

3.3 INSTALLATION OF JOINT SEALANTS

A. General: Comply with joint-sealant manufacturer's written installation instructions for products and applications indicated, unless more stringent requirements apply.

B. Sealant Installation Standard: Comply with recommendations in ASTM C 1193 for use of joint sealants as applicable to materials, applications, and conditions indicated.

C. Install sealant backings of kind indicated to support sealants during application and at position required to produce cross-sectional shapes and depths of installed sealants relative to joint widths that allow optimum sealant movement capability.

1. Do not leave gaps between ends of sealant backings.
2. Do not stretch, twist, puncture, or tear sealant backings.
3. Remove absorbent sealant backings that have become wet before sealant application and replace

NOT FOR BIDDING PURPOSES

them with dry materials.

B. Install bond-breaker tape behind sealants where sealant backings are not used between sealants and backs of joints.

E. Install sealants using proven techniques that comply with the following and at the same time backings are installed:

1. Place sealants so they directly contact and fully wet joint substrates.
2. Completely fill recesses in each joint configuration.
3. Produce uniform, cross-sectional shapes and depths relative to joint widths that allow optimum sealant movement capability.

F. Tooling of Nonsag Sealants: Immediately after sealant application and before skinning or curing begins, tool sealants according to requirements specified in subparagraphs below to form smooth, uniform beads of configuration indicated; to eliminate air pockets; and to ensure contact and adhesion of sealant with sides of joint.

1. Remove excess sealant from surfaces adjacent to joints.
2. Use tooling agents that are approved in writing by sealant manufacturer and that do not discolor sealants or adjacent surfaces.
3. Provide concave joint profile per Figure 8A in ASTM C 1193, unless otherwise indicated.

a. Use masking tape to protect surfaces adjacent to recessed tooled joints.

3.4 FIELD QUALITY CONTROL

A. Field-Adhesion Testing: Field test joint-sealant adhesion to joint substrates as follows:

1. Extent of Testing: Test completed and cured sealant joints as follows:

a. Perform 10 tests for the first 1000 feet of joint length for each kind of sealant and joint substrate.

2. Test Method: Test joint sealants according to Method A, Field-Applied Sealant Joint Hand Pull Tab, in Appendix X1 in ASTM C 1193 or Method A, Tail Procedure, in ASTM C 1521.

a. For joints with dissimilar substrates, verify adhesion to each substrate separately; extend cut along one side, verifying adhesion to opposite side. Repeat procedure for opposite side.

3. Inspect tested joints and report on the following:

a. Whether sealants filled joint cavities and are free of voids.
b. Whether sealant dimensions and configurations comply with specified requirements.
c. Whether sealants in joints connected to pulled-out portion failed to adhere to joint substrates or tore cohesively. Include data on pull distance used to test each kind of product and joint substrate. Compare these results to determine if adhesion passes sealant manufacturer's field-adhesion hand-pull test criteria.

4. Record test results in a field-adhesion-test log. Include dates when sealants were installed, names of persons who installed sealants, test dates, test locations, whether joints were primed, adhesion results and percent elongations, sealant fill, sealant configuration, and sealant dimensions.

NOT FOR BIDDING PURPOSES

5. Repair sealants pulled from test area by applying new sealants following same procedures used originally to seal joints. Ensure that original sealant surfaces are clean and that new sealant contacts original sealant.

B. Evaluation of Field-Adhesion Test Results: Sealants not evidencing adhesive failure from testing or noncompliance with other indicated requirements will be considered satisfactory. Remove sealants that fail to adhere to joint substrates during testing or to comply with other requirements. Retest failed applications until test results prove sealants comply with indicated requirements.

3.5 CLEANING

A. Clean off excess sealant or sealant smears adjacent to joints as the Work progresses by methods and with cleaning materials approved in writing by manufacturers of joint sealants and of products in which joints occur.

3.6 PROTECTION

A. Protect joint sealants during and after curing period from contact with contaminating substances and from damage resulting from construction operations or other causes so sealants are without deterioration or damage at time of Substantial Completion. If, despite such protection, damage or deterioration occurs, cut out and remove damaged or deteriorated joint sealants immediately so installations with repaired areas are indistinguishable from original work.

END OF SECTION 07 92 00

NOT FOR BIDDING PURPOSES

THIS PAGE INTENTIONALLY LEFT BLANK

NOT FOR BIDDING PURPOSES

NOT FOR BIDDING PURPOSES

SECTION 07 95 13.13

INTERIOR EXPANSION JOINT COVER ASSEMBLIES

PART 1 - GENERAL

1.1 RELATED DOCUMENTS

A. Drawings and general provisions of the Contract, including General and Supplementary Conditions and Division 01 Specification Sections, apply to this Section.

1.2 SUMMARY

A. Section includes interior expansion joint cover assemblies.

1.3 ACTION SUBMITTALS

A. Product Data: For each type of product.

1. Include construction details, material descriptions, dimensions of individual components and profiles, and finishes for expansion joint cover assemblies.

B. Shop Drawings: For each expansion joint cover assembly.

1. Include plans, elevations, sections, details, splices, block-out requirement, attachments to other work, and line diagrams showing entire route of each expansion joint.
2. Where expansion joint cover assemblies change planes, provide isometric or clearly detailed drawing depicting how components interconnect.

C. Samples for Initial Selection: For each type of exposed finish.

1. Include manufacturer's color charts showing the full range of colors and finishes available for each exposed metal and elastomeric-seal material.

D. Samples for Verification: For each type of expansion joint cover assembly, full width by 6 inches long in size.

E. Expansion Joint Cover Assembly Schedule: Prepared by or under the supervision of the supplier. Include the following information in tabular form:

1. Manufacturer and model number for each expansion joint cover assembly.
2. Expansion joint cover assembly location cross-referenced to Drawings.
3. Nominal, minimum, and maximum joint width.
4. Movement direction.
5. Materials, colors, and finishes.
6. Product options.
7. Fire-resistance ratings.

NOT FOR BIDDING PURPOSES

1.4 INFORMATIONAL SUBMITTALS

A. Product Test Reports: For each fire-resistance-rated expansion joint cover assembly, for tests performed by manufacturer and witnessed by a qualified testing agency.

1.5 QUALITY ASSURANCE

A. Mockups: Build mockups to demonstrate aesthetic effects and to set quality standards for materials and execution.

1. Build mockup of typical expansion joint cover assembly as shown on Drawings.
2. Approval of mockups does not constitute approval of deviations from the Contract Documents contained in mockups unless Architect specifically approves such deviations in writing.

PART 2 - PRODUCTS

2.1 ASSEMBLY DESCRIPTION

A. Furnish units in longest practicable lengths to minimize field splicing.

B. Include factory-fabricated closure materials and transition pieces, T-joints, corners, curbs, cross-connections, and other accessories as required to provide continuous expansion joint cover assemblies.

2.2 PERFORMANCE REQUIREMENTS

A. Seismic Performance: Expansion joint cover assemblies shall withstand the effects of earthquake motions determined according to ASCE/SEI 7.

B. Fire-Resistance Ratings: Provide expansion joint cover assemblies with fire barriers identical to those of systems tested for fire resistance according to UL 2079 or ASTM E 1966 by a qualified testing agency.

1. Hose Stream Test: Wall-to-wall and wall-to-ceiling assemblies shall be subjected to hose stream testing.

C. Expansion Joint Design Criteria:

1. Type of Movement: Thermal and Wind sway.

a. Nominal Joint Width: As indicated on Drawings.
b. Minimum Joint Width: As indicated on Drawings.
c. Maximum Joint Width: As indicated on Drawings.

2. Type of Movement: Seismic.

a. Joint Movement: As indicated on Drawings.

2.3 MANUFACTURERS

A. Basis of Design Product Subject to compliance with requirements, provide products indicated to, the

following:

1. Balco, Inc.
2. Construction Specialties, Inc.
3. InPro Corporation (IPC).
4. MM Systems Corporation.
5. Nystrom, Inc.

2.4 FLOOR EXPANSION JOINT COVERS

A. Elastomeric-Seal Floor Joint Cover: Assembly consisting of elastomeric seal anchored to frames fixed to sides of joint gap.

1. Basis of Design Product: Construction Specialties; GFT-200.
2. Application: Floor to floor.
3. Installation: Recessed.
4. Load Capacity: As indicated on Drawings.
5. Fire-Resistance Rating: Not less than that indicated on Drawings.
6. Seal: Preformed elastomeric membrane or extrusion.

a. Color: As selected by Architect from manufacturer's full range.

B. Elastomeric-Seal Floor Joint Cover: Assembly consisting of elastomeric seal anchored to frames fixed to sides of joint gap.

1. Basis of Design Product: Construction Specialties; GFTW-200.
2. Application: Floor to wall.
3. Installation: Recessed.
4. Load Capacity: As indicated on Drawings.
5. Fire-Resistance Rating: Not less than that indicated on Drawings.
6. Seal: Preformed elastomeric membrane or extrusion.

a. Color: As selected by Architect from manufacturer's full range.

2.5 WALL EXPANSION JOINT COVERS

A. Metal-Plate Wall Joint Cover: Metal cover plate fixed on one side of joint gap and free to slide on other.

1. Basis of Design Product: Construction Specialties; ASM-200.
2. Application: Wall to wall.
3. Fire-Resistance Rating: Not less than that indicated on Drawings.
4. Exposed Metal:

a. Aluminum: Mill.

B. Metal-Plate Wall Joint Cover: Metal cover plate fixed on one side of joint gap and free to slide on other.

1. Basis of Design Product: Construction Specialties; ASMC-200.
2. Application: Wall to corner.
3. Fire-Resistance Rating: Not less than that indicated on Drawings.
4. Exposed Metal:

NOT FOR BIDDING PURPOSES

a. Aluminum: Mill.

2.6 CEILING EXPANSION JOINT COVERS

A. Elastomeric-Seal Acoustical Ceiling Joint Cover: Elastomeric-seal assembly designed for use in acoustical ceilings.

1. Basis of Design Product: Construction Specialties; HC-200.
2. Application: Ceiling to ceiling.
3. Fire-Resistance Rating: Not less than that indicated on Drawings.
4. Seal: Preformed elastomeric membranes or extrusions.

a. Color: White.

B. Elastomeric-Seal Acoustical Ceiling Joint Cover: Elastomeric-seal assembly designed for use in acoustical ceilings.

1. Basis of Design Product: Construction Specialties; HCW-200.
2. Application: Ceiling to Wall.
3. Fire-Resistance Rating: Not less than that indicated on Drawings.
4. Seal: Preformed elastomeric membranes or extrusions.

a. Color: White.

2.7 MATERIALS

A. Aluminum: ASTM B 221, Alloy 6063-T5 for extrusions; ASTM B 209, Alloy 6061-T6 for sheet and plate.

1. Apply manufacturer's standard protective coating on aluminum surfaces to be placed in contact with cementitious materials.

B. Elastomeric Seals: Manufacturer's standard preformed elastomeric membranes or extrusions to be installed in metal frames.

C. Fire Barriers: Any material or material combination, when fire tested after cycling, designated to resist the passage of flame and hot gases through a movement joint and to comply with performance criteria for required fire-resistance rating.

1. Basis of Design Product: Subject to compliance with requirements, provide the following:

a. Construction Specialties; Model RFX Fire Barrier.

D. Moisture Barrier: Manufacturer's standard, flexible elastomeric material.

E. Nonmetallic, Shrinkage-Resistant Grout: ASTM C 1107/C 1107M, factory-packaged, nonmetallic aggregate grout, noncorrosive, nonstaining, mixed with water to consistency suitable for application and a 30-minute working time.

NOT FOR BIDDING PURPOSES

2.8 ALUMINUM FINISHES

A. Mill finish.

2.9 ACCESSORIES

A. Moisture Barriers: Manufacturer's standard continuous, waterproof membrane within joint and attached to substrate on sides of joint.

1. Provide at toilet rooms and janitor closet.

B. Manufacturer's standard attachment devices. Include anchors, clips, fasteners, set screws, spacers, and other accessories compatible with material in contact, as indicated or required for complete installations.

PART 3 - EXECUTION

3.1 EXAMINATION

A. Examine surfaces where expansion joint cover assemblies will be installed for installation tolerances and other conditions affecting performance of the Work.

B. Notify Architect where discrepancies occur that will affect proper expansion joint cover assembly installation and performance.

C. Proceed with installation only after unsatisfactory conditions have been corrected.

3.2 PREPARATION

A. Prepare substrates according to expansion joint cover assembly manufacturer's written instructions.

B. Coordinate and furnish anchorages, setting drawings, and instructions for installing expansion joint cover assemblies. Provide fasteners of metal, type, and size to suit type of construction indicated and to provide for secure attachment of expansion joint cover assemblies.

3.3 INSTALLATION

A. Comply with manufacturer's written instructions for storing, handling, and installing expansion joint cover assemblies and materials unless more stringent requirements are indicated.

B. Metal Frames: Perform cutting, drilling, and fitting required to install expansion joint cover assemblies.

1. Repair or grout block out as required for continuous frame support using nonmetallic, shrinkage-resistant grout.
2. Install frames in continuous contact with adjacent surfaces.

   a. Shimming is not permitted.

3. Install in true alignment and proper relationship to joints and adjoining finished surfaces measured from established lines and levels.

NOT FOR BIDDING PURPOSES

4. Adjust for differences between actual structural gap and nominal design gap due to ambient temperature at time of installation.

5. Cut and fit ends to accommodate thermal expansion and contraction of metal without buckling of frames.
6. Locate anchors at interval recommended by manufacturer, but not less than 3 inches from each end and not more than 24 inches o.c.

C. Seals: Install elastomeric seals and membranes in frames to comply with manufacturer's written instructions. Install with minimum number of end joints.

1. Provide in continuous lengths for straight sections.
2. Seal transitions. Vulcanize or heat-weld field-spliced joints as recommended by manufacturer.
3. Installation: Mechanically lock seals into frames or adhere to frames with adhesive or pressure-sensitive tape as recommended by manufacturer.

D. Install with hairline mitered corners where expansion joint cover assemblies change direction or abut other materials.

E. Terminate exposed ends of expansion joint cover assemblies with field-or factory-fabricated termination devices.

F. Fire-Resistance-Rated Assemblies: Coordinate installation of expansion joint cover assembly materials and associated work so complete assemblies comply with performance requirements.

1. Fire Barriers: Install fire barriers to provide continuous, uninterrupted fire resistance throughout length of joint, including transitions and field splices.

G. Moisture Barrier Drainage: If indicated, provide drainage fittings and connect to drains.

3.4 PROTECTION

A. Do not remove protective covering until finish work in adjacent areas is complete. When protective covering is removed, clean exposed metal surfaces to comply with manufacturer's written instructions.

B. Protect the installation from damage by work of other Sections. Where necessary due to heavy construction traffic, remove and properly store cover plates or seals and install temporary protection over expansion joint cover assemblies. Reinstall cover plates or seals prior to Substantial Completion.

END OF SECTION 07 95 13.13

NOT FOR BIDDING PURPOSES

NOT FOR BIDDING PURPOSES

SECTION 08 1113

HOLLOW METAL DOORS AND FRAMES

PART 1 - GENERAL

1.1 RELATED DOCUMENTS

A. Drawings and general provisions of the Contract, including General and Supplementary Conditions and Division 01 Specification Sections, apply to this Section.

1.2 SUMMARY

A. Section includes:

1. Interior standard steel doors and frames.

B. Minimum Thickness: Minimum thickness of base metal without coatings according to NAAMM-HMMA 803 or SDI A250.8.

1.3 COORDINATION

A. Coordinate anchorage installation for hollow-metal frames. Furnish setting drawings, templates, and directions for installing anchorages, including sleeves, concrete inserts, anchor bolts, and items with integral anchors. Deliver such items to Project site in time for installation.

B. Coordinate requirements for installation of door hardware, electrified door hardware, and access control and security systems.

1.4 PREINSTALLATION MEETINGS

A. Preinstallation Conference: Conduct conference at Project site.

1.5 ACTION SUBMITTALS

A. Product Data: For each type of product.

1. Include construction details, material descriptions, core descriptions, fire-resistance ratings, and finishes.

B. Shop Drawings: Include the following:

1. Elevations of each door design.
2. Details of doors, including vertical and horizontal edge details and metal thicknesses.
3. Frame details for each frame type, including dimensioned profiles and metal thicknesses.
4. Locations of reinforcement and preparations for hardware.

5. Details of each different wall opening condition.
6. Details of anchorages, joints, field splices, and connections.
7. Details of accessories.
8. Details of moldings, removable stops, and glazing.
9. Details of conduit and preparations for power, signal, and control systems.

C. Samples for Verification:

1. For each type of exposed finish required, prepared on Samples of not less than 3 by 5 inches.
2. For the following items, prepared on Samples about 12 by 12 inches to demonstrate compliance with requirements for quality of materials and construction:

a. Doors: Show vertical-edge, top, and bottom construction; core construction; and hinge and other applied hardware reinforcement. Include separate section showing glazing if applicable.
b. Frames: Show profile, corner joint, floor and wall anchors, and silencers. Include separate section showing fixed hollow metal panels and glazing if applicable.

D. Product Schedule: For hollow-metal doors and frames, prepared by or under the supervision of supplier, using same reference numbers for details and openings as those on Drawings. Coordinate with final door hardware schedule.

1.6 INFORMATIONAL SUBMITTALS

A. Product Test Reports: For each type of hollow-metal door and frame assembly, for tests performed by a qualified testing agency.

1.7 DELIVERY, STORAGE, AND HANDLING

A. Deliver hollow-metal doors and frames palletized, packaged, or crated to provide protection during transit and Project-site storage. Do not use nonvented plastic.

1. Provide additional protection to prevent damage to factory-finished units.

B. Deliver welded frames with two removable spreader bars across bottom of frames, tack welded to jambs and mullions.

C. Store hollow-metal doors and frames vertically under cover at Project site with head up. Place on minimum 4-inch-high wood blocking. Provide minimum 1/4-inch space between each stacked door to permit air circulation.

PART 2 - PRODUCTS

2.1 MANUFACTURERS

A. Manufacturers: Subject to compliance with requirements, available manufacturers offering products that may be incorporated into the Work include, but are not limited to, the following:

1. Ceco Door Products.
2. Curries Co.
3. MegaMet Industries.

NOT FOR BIDDING PURPOSES

4. Mesker Door Inc.
5. Pioneer Industries, Inc.
6. Steelcraft; an Allegion brand.

2.2 PERFORMANCE REQUIREMENTS

A. Fire-Rated Assemblies: Complying with NFPA 80 and listed and labeled by a qualified testing agency acceptable to authorities having jurisdiction for fire-protection ratings indicated, based on testing at positive pressure according to NFPA 252 or UL 10C.

B. Fire-Rated, Borrowed-Lite Assemblies: Complying with NFPA 80 and listed and labeled by a qualified testing agency acceptable to authorities having jurisdiction, for fire-protection ratings indicated, based on testing according to NFPA 257 or UL 9.

2.3 INTERIOR STANDARD STEEL DOORS AND FRAMES

A. Construct hollow-metal doors and frames to comply with standards indicated for materials, fabrication, hardware locations, hardware reinforcement, tolerances, and clearances, and as specified.

B. Extra-Heavy-Duty Doors and Frames: SDI A250.8, Level 3; SDI A250.4, Level A. At locations indicated in the Door and Frame Schedule.

1. Doors:

a. Type: As indicated in the Door and Frame Schedule.
b. Thickness: 1-3/4 inches.
c. Face: Metallic-coated steel sheet, minimum thickness of 0.053 inch.
d. Edge Construction: Model 2, Seamless.
e. Edge Bevel: Provide manufacturer's standard beveled or square edges.
f. Core: Manufacturer's standard.
g. Fire-Rated Core: Manufacturer's standard core for fire-rated doors.

2. Frames:

a. Materials: Metallic-coated steel sheet, minimum thickness of 0.067 inch.
b. Sidelite and Transom Frames: Fabricated from same thickness material as adjacent door frame.
c. Construction: Full profile welded.

3. Exposed Finish: Prime.

2.4 BORROWED LITES

A. Fabricate of metallic-coated steel sheet, minimum thickness of 0.067 inch.

B. Construction: Full profile welded.

C. Fabricate in one piece except where handling and shipping limitations require multiple sections. Where frames are fabricated in sections due to shipping or handling limitations, provide alignment plates or angles at each joint, fabricated of metal of same or greater thickness as metal as frames.

NOT FOR BIDDING PURPOSES

D. Provide countersunk, flat-or oval-head exposed screws and bolts for exposed fasteners unless otherwise indicated.

2.5 FRAME ANCHORS

A. Jamb Anchors:

1. Type: Anchors of minimum size and type required by applicable door and frame standard, and suitable for performance level indicated.
2. Quantity: Minimum of three anchors per jamb, with one additional anchor for frames with no floor anchor. Provide one additional anchor for each 24 inches of frame height above 7 feet.
3. Postinstalled Expansion Anchor: Minimum 3/8-inch-diameter bolts with expansion shields or inserts, with manufacturer's standard pipe spacer.

B. Floor Anchors: Provide floor anchors for each jamb and mullion that extends to floor.

C. Floor Anchors for Concrete Slabs with Underlayment: Adjustable-type anchors with extension clips, allowing not less than 2-inch height adjustment. Terminate bottom of frames at top of underlayment.

D. Material: ASTM A 879/A 879M, Commercial Steel (CS), 04Z coating designation; mill phosphatized.

1. For anchors built into exterior walls, steel sheet complying with ASTM A 1008/A 1008M or ASTM A 1011/A 1011M; hot-dip galvanized according to ASTM A 153/A 153M, Class B.

2.6 MATERIALS

A. Cold-Rolled Steel Sheet: ASTM A 1008/A 1008M, Commercial Steel (CS), Type B; suitable for exposed applications.

B. Hot-Rolled Steel Sheet: ASTM A 1011/A 1011M, Commercial Steel (CS), Type B; free of scale, pitting, or surface defects; pickled and oiled.

C. Metallic-Coated Steel Sheet: ASTM A 653/A 653M, Commercial Steel (CS), Type B; with minimum G60 metallic coating.

D. Inserts, Bolts, and Fasteners: Hot-dip galvanized according to ASTM A 153/A 153M.

E. Power-Actuated Fasteners in Concrete: Fastener system of type suitable for application indicated, fabricated from corrosion-resistant materials, with clips or other accessory devices for attaching hollow-metal frames of type indicated.

F. Glazing: Comply with requirements in Section 088000 "Glazing."

2.7 FABRICATION

A. Door Astragals: Provide overlapping astragal on one leaf of pairs of doors where required by NFPA 80 for fire-performance rating or where indicated. Extend minimum 3/4 inch beyond edge of door on which astragal is mounted or as required to comply with published listing of qualified testing agency.

B. Hollow-Metal Frames: Fabricate in one piece except where handling and shipping limitations require multiple sections. Where frames are fabricated in sections, provide alignment plates or angles at each

NOT FOR BIDDING PURPOSES

joint, fabricated of metal of same or greater thickness as frames.

1. Sidelite and Transom Bar Frames: Provide closed tubular members with no visible face seams or joints, fabricated from same material as door frame. Fasten members at crossings and to jambs by welding, or by rigid mechanical anchors.
2. Provide countersunk, flat-or oval-head exposed screws and bolts for exposed fasteners unless otherwise indicated.
3. Door Silencers: Except on weather-stripped frames, drill stops to receive door silencers as follows. Keep holes clear during construction.

   a. Single-Door Frames: Drill stop in strike jamb to receive three door silencers.
   b. Double-Door Frames: Drill stop in head jamb to receive two door silencers.

C. Hardware Preparation: Factory prepare hollow-metal doors and frames to receive templated mortised hardware, and electrical wiring; include cutouts, reinforcement, mortising, drilling, and tapping according to SDI A250.6, the Door Hardware Schedule, and templates.

1. Reinforce doors and frames to receive nontemplated, mortised, and surface-mounted door hardware.
2. Comply with BHMA A156.115 for preparing hollow-metal doors and frames for hardware.

D. Glazed Lites: Provide stops and moldings around glazed lites where indicated. Form corners of stops and moldings with butted or mitered hairline joints.

1. Provide stops and moldings flush with face of door, and with square stops unless otherwise indicated.
2. Multiple Glazed Lites: Provide fixed and removable stops and moldings so that each glazed lite is capable of being removed independently.
3. Provide fixed frame moldings on outside of exterior and on secure side of interior doors and frames. Provide loose stops and moldings on inside of hollow-metal doors and frames.
4. Coordinate rabbet width between fixed and removable stops with glazing and installation types indicated.
5. Provide stops for installation with countersunk flat-or oval-head machine screws spaced uniformly not more than 9 inches o.c. and not more than 2 inches o.c. from each corner.

2.8 STEEL FINISHES

A. Prime Finish: Clean, pretreat, and apply manufacturer's standard primer.

1. Shop Primer: Manufacturer's standard, fast-curing, lead-and chromate-free primer complying with SDI A250.10; recommended by primer manufacturer for substrate; compatible with substrate and field-applied coatings despite prolonged exposure.

PART 3 - EXECUTION

3.1 PREPARATION

A. Remove welded-in shipping spreaders installed at factory. Restore exposed finish by grinding, filling, and dressing, as required to make repaired area smooth, flush, and invisible on exposed faces. Touch up factory-applied finishes where spreaders are removed.

NOT FOR BIDDING PURPOSES

B. Drill and tap doors and frames to receive nontemplated, mortised, and surface-mounted door hardware.

3.2 INSTALLATION

A. General: Install hollow-metal doors and frames plumb, rigid, properly aligned, and securely fastened in place. Comply with approved Shop Drawings and with manufacturer's written instructions.

B. Hollow-Metal Frames: Comply with SDI A250.11.

1. Set frames accurately in position; plumbed, aligned, and braced securely until permanent anchors are set. After wall construction is complete, remove temporary braces without damage to completed Work.

   a. Where frames are fabricated in sections, field splice at approved locations by welding face joint continuously; grind, fill, dress, and make splice smooth, flush, and invisible on exposed faces. Touch-up finishes.
   b. Install frames with removable stops located on secure side of opening.

2. Fire-Rated Openings: Install frames according to NFPA 80.
3. Floor Anchors: Secure with postinstalled expansion anchors.

   a. Floor anchors may be set with power-actuated fasteners instead of postinstalled expansion anchors if so indicated and approved on Shop Drawings.

4. Masonry Walls: Coordinate installation of frames to allow for solidly filling space between frames and masonry with grout or mortar.
5. Installation Tolerances: Adjust hollow-metal frames to the following tolerances:

   a. Squareness: Plus or minus 1/16 inch, measured at door rabbet on a line 90 degrees from jamb perpendicular to frame head.
   b. Alignment: Plus or minus 1/16 inch, measured at jambs on a horizontal line parallel to plane of wall.
   c. Twist: Plus or minus 1/16 inch, measured at opposite face corners of jambs on parallel lines, and perpendicular to plane of wall.
   d. Plumbness: Plus or minus 1/16 inch, measured at jambs at floor.

C. Hollow-Metal Doors: Fit and adjust hollow-metal doors accurately in frames, within clearances specified below.

1. Non-Fire-Rated Steel Doors: Comply with SDI A250.8.
2. Fire-Rated Doors: Install doors with clearances according to NFPA 80.

D. Glazing: Comply with installation requirements in Section 088000 "Glazing" and with hollow-metal manufacturer's written instructions.

3.3 CLEANING AND TOUCHUP

A. Prime-Coat Touchup: Immediately after erection, sand smooth rusted or damaged areas of prime coat and apply touchup of compatible air-drying, rust-inhibitive primer.

B. Metallic-Coated Surface Touchup: Clean abraded areas and repair with galvanizing repair paint according to manufacturer's written instructions.

NOT FOR BIDDING PURPOSES

C. Touchup Painting: Cleaning and touchup painting of abraded areas of paint are specified in painting Sections.

END OF SECTION 08 11 13

NOT FOR BIDDING PURPOSES

THIS PAGE INTENTIONALLY LEFT BLANK

NOT FOR BIDDING PURPOSES

NOT FOR BIDDING PURPOSES

SECTION 08 14 16

FLUSH WOOD DOORS

PART 1 - GENERAL

1.1 RELATED DOCUMENTS

A. Drawings and general provisions of the Contract, including General and Supplementary Conditions and Division 01 Specification Sections, apply to this Section.

1.2 SUMMARY

A. Section Includes:

1. Solid-core doors with wood-veneer faces.
2. Shop finishing flush wood doors.

1.3 PREINSTALLATION MEETINGS

A. Preinstallation Conference: Conduct conference at Project site.

1.4 ACTION SUBMITTALS

A. Product Data: For each type of door indicated. Include details of core and edge construction and trim for openings. Include factory-finishing specifications.

B. Shop Drawings: Indicate location, size, and hand of each door; elevation of each kind of door; construction details not covered in Product Data; location and extent of hardware blocking; and other pertinent data.

1. Indicate dimensions and locations of mortises and holes for hardware.
2. Indicate dimensions and locations of cutouts.
3. Indicate requirements for veneer matching.
4. Indicate doors to be factory finished and finish requirements.
5. Indicate fire-protection ratings for fire-rated doors.

C. Samples for Initial Selection: For factory-finished doors.

D. Samples for Verification:

1. Factory finishes applied to actual door face materials, approximately 8 by 10 inches, for each material and finish. For each wood species and transparent finish, provide set of three samples showing typical range of color and grain to be expected in the finished work.
2. Corner sections of doors, approximately 8 by 10 inches, with door faces and edges representing actual materials to be used.

a. Finish veneer-faced door samples with same materials proposed for factory-finished doors.

E. Warranty: Sample of special warranty.

1.5 QUALITY ASSURANCE

A. Manufacturer Qualifications: A qualified manufacturer that is certified for chain of custody by an FSC-accredited certification body.

B. Quality Standard: In addition to requirements specified, comply with AWI's "Architectural Woodwork Quality Standards Illustrated."

1. Provide AWI Quality Certification Labels or an AWI letter of licensing for Project indicating that doors comply with requirements of grades specified.

1.6 DELIVERY, STORAGE, AND HANDLING

A. Comply with requirements of referenced standard and manufacturer's written instructions.

B. Package doors individually in plastic bags or cardboard cartons.

C. Mark each door on top and bottom rail with opening number used on Shop Drawings.

1.7 FIELD CONDITIONS

A. Environmental Limitations: Do not deliver or install doors until spaces are enclosed and weathertight, wet work in spaces is complete and dry, and HVAC system is operating and maintaining temperature between 60 and 90 deg F and relative humidity between 43 and 70 percent during the remainder of the construction period.

1.8 WARRANTY

A. Special Warranty: Manufacturer's standard form in which manufacturer agrees to repair or replace doors that fail in materials or workmanship within specified warranty period.

1. Failures include, but are not limited to, the following:

a. Warping (bow, cup, or twist) more than 1/4 inch in a 42-by-84-inch section.
b. Telegraphing of core construction in face veneers exceeding 0.01 inch in a 3-inch span.

2. Warranty shall also include installation and finishing that may be required due to repair or replacement of defective doors.
3. Warranty Period for Solid-Core Interior Doors: Life of installation.

PART 2 - PRODUCTS

2.1 MANUFACTURERS

A. Manufacturers: Subject to compliance with requirements, available manufacturers offering products that may be incorporated into the Work include, but are not limited to, the following:

NOT FOR BIDDING PURPOSES

1. Eggers Industries.
2. Graham; an Assa Abloy Group company.
3. Marshfield -Algoma.
4. Mohawk Flush Doors, Inc.; a Masonite company.
5. VT Industries Inc.

2.2 FLUSH WOOD DOORS, GENERAL

A. Quality Standard: In addition to requirements specified, comply with AWI's, AWMAC's, and WI's "Architectural Woodwork Standards or WDMA I.S.1-A, "Architectural Wood Flush Doors."

1. Provide AWI Quality Certification Labels indicating that doors comply with requirements of grades specified.

2.3 DOOR CONSTRUCTION, GENERAL

A. WDMA I.S.1-A Performance Grade: Heavy Duty.

B. Particleboard-Core Doors:

1. Particleboard: ANSI A208.1, Grade LD-2.
2. Provide doors with glued-wood-stave or structural-composite-lumber cores instead of particleboard cores for doors indicated to receive exit devices.

2.4 VENEERED-FACED DOORS FOR TRANSPARENT FINISH

A. Interior Solid-Core Doors:

1. Grade: Premium, with Grade A faces.
2. Species:
   a. Stage Storage Doors: Maple.
   b. All other Doors: Red oak.
3. Cut: Plain sliced.
4. Match between Veneer Leaves: Book match.
5. Assembly of Veneer Leaves on Door Faces: Center-balance match.
6. Pair and Set Match: Provide for doors hung in same opening.
7. Room Match: Provide door faces of compatible color and grain within each separate room or area of building.
8. Exposed Vertical and Top Edges: Same species as faces.
9. Core: Particleboard.
10. Construction: Five plies. Stiles and rails are bonded to core, then entire unit abrasive planed before veneering.
11. Headraill: Total blocking & head rail not less than 7 inches by door width.

2.5 LIGHT FRAMES AND LOUVERS

A. Wood Beads for Light Openings in Wood Doors: Provide manufacturer's standard wood beads unless otherwise indicated.

1. Wood Species: Same species as door faces.
2. Profile: Manufacturer's standard shape.

NOT FOR BIDDING PURPOSES

NOT FOR BIDDING PURPOSES

2.6 FABRICATION

A. Factory fit doors to suit frame-opening sizes indicated. Comply with clearance requirements of referenced quality standard for fitting unless otherwise indicated.

B. Factory machine doors for hardware that is not surface applied. Locate hardware to comply with DHI-WDHS-3. Comply with final hardware schedules, door frame Shop Drawings, DHI A115-W series standards, and hardware templates.

1. Coordinate with hardware mortises in metal frames to verify dimensions and alignment before factory machining.

C. Openings: Factory cut and trim openings through doors.

1. Light Openings: Trim openings with moldings of material and profile indicated.
2. Glazing: Factory install glazing in doors indicated to be factory finished. Comply with applicable requirements in Section 088000 "Glazing."

2.7 FACTORY FINISHING

A. General: Comply with referenced quality standard for factory finishing. Complete fabrication, including fitting doors for openings and machining for hardware that is not surface applied, before finishing.

1. Finish faces, all four edges, edges of cutouts, and mortises. Stains and fillers may be omitted on top and bottom edges, edges of cutouts, and mortises.

B. Factory finish doors.

C. Transparent Finish:

1. Grade: Premium.
2. Finish: AWI conversion varnish or catalyzed polyurethane system.
3. Staining: Per Finish Schedule color legend.
4. Effect: Filled finish.

PART 3 - EXECUTION

3.1 EXAMINATION

A. Examine doors and installed door frames before hanging doors.

1. Verify that frames comply with indicated requirements for type, size, location, and swing characteristics and have been installed with level heads and plumb jambs.
2. Reject doors with defects.

B. Proceed with installation only after unsatisfactory conditions have been corrected.

3.2 INSTALLATION

A. Hardware: For installation, see Section 087100 "Door Hardware."

B. Installation Instructions: Install doors to comply with manufacturer's written instructions and the referenced quality standard, and as indicated.

C. Factory-Finished Doors: Restore finish before installation if fitting or machining is required at Project site.

3.3 ADJUSTING

A. Operation: Rehang or replace doors that do not swing or operate freely.

B. Finished Doors: Replace doors that are damaged or that do not comply with requirements. Doors may be repaired or refinished if work complies with requirements and shows no evidence of repair or refinishing.

END OF SECTION 08 14 16

NOT FOR BIDDING PURPOSES

THIS PAGE INTENTIONALLY LEFT BLANK

NOT FOR BIDDING PURPOSES

NOT FOR BIDDING PURPOSES

SECTION 08 16 13

FRP FLUSH DOORS

PART 1 - GENERAL

1.1 RELATED DOCUMENTS

A. Drawings and general provisions of the Contract, including General and Supplementary Conditions and Division 01 Specification Sections, apply to this Section.

1.2 SUMMARY

A. Section Includes:

1. Fiberglass reinforced polyester (FRP) flush doors with aluminum frames.

1.3 ACTION SUBMITTALS

A. Product Data: Submit manufacturer's product data, including description of materials, components, fabrication, finishes, and installation.

B. Shop Drawings: Submit manufacturer's shop drawings, including elevations, sections, and details, indicating dimensions, tolerances, materials, fabrication, doors, panels, framing, hardware schedule, and finish.

C. Samples:

1. Door: Submit manufacturer's sample of door showing face sheets, core, framing, and finish.
2. Color: Submit manufacturer's samples of standard colors of doors and frames.

D. Test Reports: Submit certified test reports from qualified independent testing agency indicating doors comply with specified performance requirements.

E. Manufacturer's Project References: Submit list of successfully completed projects including project name and location, name of architect, and type and quantity of doors manufactured.

F. Maintenance Manual: Submit manufacturer's maintenance and cleaning instructions for doors, including maintenance and operating instructions for hardware.

G. Warranty: Submit manufacturer's standard warranty.

1.4 QUALITY ASSURANCE

A. Manufacturer's Qualifications: Continuously engaged in manufacturing of doors of similar type to that specified, with a minimum of 25 years successful experience.

1.5 DELIVERY, STORAGE, AND HANDLING

A. Delivery: Deliver materials to site in manufacturer's original, unopened containers and packaging, with labels clearly identifying opening door mark and manufacturer.

B. Storage: Store materials in clean, dry area indoors in accordance with manufacturer's instructions.

C. Handling: Protect materials and finish from damage during handling and installation.

1.6 WARRANTY

A. Warrant doors, frames, and factory hardware against failure in materials and workmanship, including excessive deflection, faulty operation, defects in hardware installation, and deterioration of finish or construction in excess of normal weathering.

B. Warranty Period: Ten years from Substantial Completion.

PART 2 - PRODUCTS

2.1 FLUSH TYPE EXTERIOR FRP DOORS

A. Basis-of-Design Product: Subject to compliance with requirements, provide Commercial Door Systems; Wide Stile Door Systems, Model F5OOHD, or comparable product by one of the following:

1. Special-Lite.
2. Cline Doors.

B. Test Reports and Performance Requirements:

1. Door Leaf Requirement Tests: Door leaf without frame or hardware and with a minimum lite cut out of 12 inches by 24 inches is to meet the following criteria:

a. Concentrated Load Bow Test: 4200 lbs. minimum load with no permanent deflection to door leaf.
b. Torsion Twist Test: @300 lbs. minimum load with no permanent set to door leaf.

2. Face Sheet Requirement Tests: FRP material and FRP face sheets with core material are to meet the following criteria:

a. Center Door Section (face sheet/core/face sheet):

1) Gardner Impact Test -ASTM D5420 – 411.84 in-lb.

b. FRP Material (MR85):

1) Flexural Strength Test:

a) ASTM D790 -22,680 psi (inward).
b) 24,400 psi (outward).

2) lzod Impact Strength Test:

NOT FOR BIDDING PURPOSES

a) ASTM D256 -15.36 ft-lb./in thickness.

3) Barcol Hardness -ASTM D5420 – 50.

C. Materials:

1. Aluminum Members:

a. Doors, frames, miscellaneous components, and entrance systems accessories are to be from the same manufacturer. Splitting the source for these items will not be permitted.
b. Provide alloy and temper as recommended for resistance to corrosion and color control. Aluminum member references are ASTM B 221 for extrusions and ASTM B 209 for sheets.

2. Aluminum Edged Fiberglass (FRP) Panels:

a. Construction: Panels will be constructed of two sheets of 0.120 fiberglass sheets bonded to 3/4-inch core material. Panel thickness will be 1-inch. An aluminum frame surrounds the perimeter of the panel, and measures 1 inch by 1 inch by 1 inch with 1/8-inch wall thickness.
b. Wood edged panels will not be accepted.
c. Core material will be 25-psi density polystyrene with a flame spread rating higher than 25 requiring an aluminum liner between the FRP face sheet and the urethane core material. Core material must have a proven record for use in panel fabrication without delaminating. Urethane core panels will require a letter from the manufacturer offering special guarantee that the FRP face sheets will not delaminate (bubble) for a period of 10 years, and that the manufacturer will cover all replacement costs if delamination does occur.

1) Minimum R-value: 11.

d. FRP face sheets will be 0.120 minimum thickness with a pebble like surface.
e. FRP face sheets are MR85 high impact frp material that has been tested by ASTM D5420 Gardner Impact Test with "Mean Failure Energy" rating no lower than 411.84 in-lb.
f. Colors: As selected by architect.

3. Extra Heavy-Duty Fiberglass Wide Stile (FRP) Doors:

a. Structural Main Frame: Doors have an aluminum main frame constructed from extruded aluminum 6063 -T6 alloy. Doors are 1-3/4 inch thick. Main frame tube is to be a single extruded unit measuring 1-1/2 inches by 5-1/2 inches (O.D.) on both side stiles, and 6-inches (O.D.) Top and Bottom rails. Spliced extrusions that are joined together to measure 6 inches will not be accepted.

b. Main Frame Wall Thickness:

1) Side Stiles: Minimum 3/16-inch-thick hinge edge wall.
2) Top and Bottom Rails: Minimum 1/8-inch-thick outside edge wall. (tie rod spline built into tube)
3) All Rails and Stiles: Minimum 1/8-inch-thick face walls.
4) All Rails and Stiles: Minimum 1/8-inch-thick inside edge wall.

c. Main Frame Joinery: Assembly for the meeting joints of the Rails and Stiles on the main frame are to be mortise and tenon on all four joints:

NOT FOR BIDDING PURPOSES

1) Secured with:

a) 2 Tie Rods in Head Rail.
b) 1 Tie Rod in Bottom Rail.

d. Welded joints will not be accepted.

4. Inter-Loc Edge Trim: All aluminum trim is completely removable. All parts of the door are replaceable and repairable in the field. No fastening devices are exposed on the Stile Edge Trims.

a. Snap-on or screw-on stile trim will not be accepted.

5. Weatherstripping: Center stiles of pairs will have pile weather-stripping 0.500 backing width, 0.5-inch pile height.
6. Hardware Reinforcing: Closer reinforcing to be 3/16-inch steel inserted into head rail. Other surface applied hardware is reinforced with the standard main frame tube wall thickness of 1/8 inch. Reinforcing for mortise and concealed hardware is to be done per template requirements.

a. Hex or thru bolts will not be accepted.
b. Flush mounted door pulls must be provided as part of hardware requirement.

7. Wide Stile FRP doors will carry a 25-year limited warranty on doors structural integrity, main frame, and the lamination between face sheets and core. Warrantees are to be in writing fro the door manufacturer.

2.2 ALUMINUM FINISHES

A. High-Performance Organic Finish: Two-coat fluoropolymer finish complying with AAMA 2604 and containing not less than 70 percent PVDF resin by weight in color coat. Prepare, pretreat, and apply coating to exposed metal surfaces to comply with coating and resin manufacturers' written instructions.

1. Color: As selected by owner.

PART 3 - EXECUTION

3.1 EXAMINATION

A. Examine areas to receive doors. Notify Architect of conditions that would adversely affect installation or subsequent use. Do not proceed with installation until unsatisfactory conditions are corrected.

3.2 PREPARATION

A. Ensure openings to receive frames are plumb, level, square, and in tolerance.

3.3 INSTALLATION

A. Install doors in accordance with manufacturer's instructions.

B. Install doors plumb, level, square, true to line, and without warp or rack.

NOT FOR BIDDING PURPOSES

C. Anchor frames securely in place.

D. Separate aluminum from other metal surfaces with bituminous coatings or other means approved by Architect.

E. Set thresholds in bed of mastic and backseal.

F. Install exterior doors to be weathertight in closed position.

G. Repair minor damages to finish in accordance with manufacturer's instructions and as approved by Architect.

H. Remove and replace damaged components that cannot be successfully repaired as determined by Architect.

3.4 FIELD QUALITY CONTROL

A. Manufacturer's Field Services: Manufacturer's representative shall provide technical assistance and guidance for installation of doors.

3.5 ADJUSTING

A. Adjust doors, hinges, and locksets for smooth operation without binding.

3.6 CLEANING

A. Clean doors promptly after installation in accordance with manufacturer's instructions.

B. Do not use harsh cleaning materials or methods that would damage finish.

3.7 PROTECTION

A. Protect installed doors to ensure that, except for normal weathering, doors will be without damage or deterioration at time of substantial completion.

END OF SECTION 08 16 13

NOT FOR BIDDING PURPOSES

THIS PAGE INTENTIONALLY LEFT BLANK

NOT FOR BIDDING PURPOSES

NOT FOR BIDDING PURPOSES

SECTION 08 31 13

ACCESS DOORS AND FRAMES

PART 1 - GENERAL

1.1 RELATED DOCUMENTS

A. Drawings and general provisions of the Contract, including General and Supplementary Conditions and Division 01 Specification Sections, apply to this Section.

1.2 SUMMARY

A. Section includes non-rated access doors and frames for walls and ceilings.

1.3 ACTION SUBMITTALS

A. Product Data: For each type of product.

1. Include construction details, material descriptions, dimensions of individual components and profiles, and finishes.

B. Product Schedule: For access doors and frames. Use same designations indicated on Drawings.

PART 2 - PRODUCTS

2.1 ACCESS DOORS AND FRAMES

A. Manufacturers: Subject to compliance with requirements, available manufacturers offering products that may be incorporated into the Work include, but are not limited to, the following:

1. Acudor Products, Inc.
2. JL Industries, Inc.; a division of the Activar Construction Products Group.
3. Karp Associates, Inc.
4. Larsens Manufacturing Company.
5. Metropolitan Door Industries Corp.
6. Milcor; Commercial Products Group of Hart & Cooley, Inc.
7. Nystrom, Inc.

B. Flush Access Doors and Frames with Exposed Trim (In CMU Walls):

1. Description: Face of door flush with frame, with exposed flange and concealed hinge.
2. Locations: Wall and ceiling.
3. Door Size: As indicated on Drawings.
4. Uncoated Steel Sheet for Door: Nominal 0.075 inch, 14 gage, factory primed.
5. Frame Material: Nominal 0.060 inch, 16 gage, same material and finish as door.
6. Latch and Lock: Prepared for mortise cylinder, including 2 keys.

C. Flush Access Doors with Concealed Flanges (In Stud Wall):

1. Description: Face of door flush with frame; with concealed flange for gypsum board installation and concealed hinge.
2. Locations: Wall and ceiling.
3. Door Size: As indicated on Drawings.
4. Uncoated Steel Sheet for Door: Nominal 0.075 inch, 14 gage, factory primed.
5. Frame Material: Nominal 0.060 inch, 16 gage, same material and finish as door.
6. Latch and Lock: Prepared for mortise cylinder, including 2 keys.

2.2 MATERIALS

A. Steel Plates, Shapes, and Bars: ASTM A 36/A 36M.

B. Steel Sheet: Uncoated or electrolytic zinc coated, ASTM A 879/A 879M, with cold-rolled steel sheet substrate complying with ASTM A 1008/A 1008M, Commercial Steel (CS), exposed.

C. Inserts, Bolts, and Anchor Fasteners: Hot-dip galvanized steel according to ASTM A 153/A 153M or ASTM F 2329.

2.3 FABRICATION

A. General: Provide access door and frame assemblies manufactured as integral units ready for installation.

B. Metal Surfaces: For metal surfaces exposed to view in the completed Work, provide materials with smooth, flat surfaces without blemishes. Do not use materials with exposed pitting, seam marks, roller marks, rolled trade names, or roughness.

C. Doors and Frames: Grind exposed welds smooth and flush with adjacent surfaces. Furnish mounting holes, attachment devices and fasteners of type required to secure access doors to types of supports indicated.

1. For concealed flanges with drywall bead, provide edge trim for gypsum panels securely attached to perimeter of frames.

2.4 FINISHES

A. Comply with NAAMM's "Metal Finishes Manual for Architectural and Metal Products" for recommendations for applying and designating finishes.

B. Protect mechanical finishes on exposed surfaces from damage by applying a strippable, temporary protective covering before shipping.

C. Appearance of Finished Work: Noticeable variations in same piece are not acceptable. Variations in appearance of adjoining components are acceptable if they are within the range of approved Samples and are assembled or installed to minimize contrast.

D. Painted Finishes: Comply with coating manufacturer's written instructions for cleaning, conversion coating, and applying and baking finish.

1. Factory Primed: Apply manufacturer's standard, lead-and chromate-free, universal primer immediately after surface preparation and pretreatment.

NOT FOR BIDDING PURPOSES

PART 3 - EXECUTION

3.1 EXAMINATION

A. Examine substrates for compliance with requirements for installation tolerances and other conditions affecting performance of the Work.

B. Proceed with installation only after unsatisfactory conditions have been corrected.

3.2 INSTALLATION

A. Comply with manufacturer's written instructions for installing access doors and frames.

3.3 ADJUSTING AND CLEANING

A. Adjust doors and hardware after installation for proper operation.

END OF SECTION 08 31 13

NOT FOR BIDDING PURPOSES

THIS PAGE INTENTIONALLY LEFT BLANK

NOT FOR BIDDING PURPOSES

NOT FOR BIDDING PURPOSES

SECTION 08 33 23

OVERHEAD COILING DOORS

PART 1 - GENERAL

1.1 RELATED DOCUMENTS

A. Drawings and general provisions of the Contract, including General and Supplementary Conditions and Division 01 Specification Sections, apply to this Section.

1.2 SUMMARY

A. Section Includes:

1. Non-insulated service doors.
2. Insulated service doors.

1.3 ACTION SUBMITTALS

A. Product Data: For each type and size of overhead coiling door and accessory.

1. Include construction details, material descriptions, dimensions of individual components, profiles for slats, and finishes.
2. Include rated capacities, operating characteristics, electrical characteristics, and furnished accessories.

B. Shop Drawings: For each installation and for special components not dimensioned or detailed in manufacturer's product data.

1. Include plans, elevations, sections, and mounting details.
2. Include details of equipment assemblies, and indicate dimensions, required clearances, method of field assembly, components, and location and size of each field connection.
3. Include points of attachment and their corresponding static and dynamic loads imposed on structure.
4. For exterior components, include details of provisions for assembly expansion and contraction and for excluding and draining moisture to the exterior.

C. Samples for Initial Selection: Manufacturer's finish charts showing full range of colors and textures available for units with factory-applied finishes.

1. Include similar Samples of accessories involving color selection.

1.4 INFORMATIONAL SUBMITTALS

A. Qualification Data: For qualified Installer.

B. Sample Warranty: For special warranty.

1.5 CLOSEOUT SUBMITTALS

A. Maintenance Data: For overhead coiling doors to include in maintenance manuals.

1.6 QUALITY ASSURANCE

A. Installer Qualifications: An entity that employs installers and supervisors who are trained and approved by manufacturer for both installation and maintenance of units required for this Project.

1. Maintenance Proximity: Not more than two hours' normal travel time from Installer's place of business to Project site.

B. Accessibility Standard: Comply with applicable provisions in the USDOJ's "2010 ADA Standards for Accessible Design" and ICC A117.1.

1.7 WARRANTY

A. Special Warranty: Manufacturer agrees to repair or replace components of doors that fail in materials or workmanship within specified warranty period.

1. Warranty Period: Two years from date of Substantial Completion.

PART 2 - PRODUCTS

2.1 MANUFACTURERS

A. Source Limitations: Obtain overhead coiling doors from single source from single manufacturer.

1. Obtain operators and controls from overhead coiling-door manufacturer.

2.2 PERFORMANCE REQUIREMENTS

A. Structural Performance, Exterior Doors: Capable of withstanding the following design wind loads:

1. Design Wind Load: Uniform pressure (velocity pressure) of 20 lbf/sq. ft., acting inward and outward
2. Deflection Limits: Design overhead coiling doors to withstand design wind load without evidencing permanent deformation or disengagement of door components.

2.3 INTERIOR DOOR ASSEMBLY

1. Basis-of-Design Product: Subject to compliance with requirements, provide Cornell Iron Works, Inc.; ESD10 Rolling Service Door or comparable product by one of the following:

a. Cookson Company.
b. Overhead Door Corporation.
c. Wayne-Dalton Corp.

NOT FOR BIDDING PURPOSES

B. Overhead Interior Coiling Doors: Non-rated overhead coiling doors, conforming to the following:

1. Face-of-wall mounted.
2. Slats: Type 5F slat, interlocking, roll-formed, flat-faced, 22 gage (minimum), stainless steel with No. 4 finish; refer to the Door Schedule for door number.
3. Nominal Slat Size: 2-5/8 inches wide x required length.
4. Slat Ends: Alternate slats fitted with nylon to act as wearing surface in guides and to prevent lateral movement.
5. Curtain Bottom: Fitted with stainless steel angles and vinyl astragal to provide reinforcement and positive contact with floor in closed position.

C. Guides: 12 gage rolled stainless steel track, continuous, vertical mounted; stainless steel mounting brackets.

D. Roller Shaft Counterbalance: Steel pipe and helical steel torsion spring system, capable of producing torque sufficient to ensure smooth operation of curtain from any position and capable of holding position at mid-travel; with adjustable spring tension.

E. Hood: 24-gauge galvanized steel with reinforced top and bottom edges. Provide minimum 1/4-inch steel intermediate support brackets as required to prevent excessive sag. Refer to the Drawings for enclosure details at hood.

F. Motorized Doors: Cornell Iron Works Model #GH Motor Operator conforming to the following:

1. Electric Operator:

a. Description: UL-Listed, horizontal front-of-coil bracket mounted.
b. Motor Enclosure: NEMA Type 1, open drip proof.
c. Motor Rating: 3/4 HP, continuous duty.
d. Motor Voltage: 120-volt, single phase.
e. Brake: Electric brake and limit switches.
f. Motor Controller: Size 0, reversing magnetic, electrically and mechanically interlocked.

2. Control Station: Keyed control (open/close/stop) constant pressure control for each operator; 24-volt circuit; flush mounted. Control station shall be provided on one side of each door.
3. Safety Edge: Located at door bottom, full width, electro-mechanical sensitized type, wired to stop door upon striking object; hollow neoprene covered seal.
4. Door drive shall utilize minimum #50 roller chain and sprockets. Operator shall be equipped with electrically interlocked floor level disconnect and chain hoist for manual operation

2.4 EXTERIOR DOOR ASSEMBLY

A. Insulated Service Door: Overhead coiling door formed with curtain of interlocking metal slats.

1. Basis-of-Design Product: Subject to compliance with requirements, provide Cornell Iron Works, Inc.; ESD20 “Thermiser” Insulated Rolling Service Door or comparable product by one of the following:

a. Cookson Company.
b. Overhead Door Corporation.
c. Wayne-Dalton Corp.

NOT FOR BIDDING PURPOSES

B. Operation Cycles: Door components and operators capable of operating for not less than 50,000. One operation cycle is complete when a door is opened from the closed position to the fully open position and returned to the closed position.

1. Include tamperproof cycle counter.
2. Operation Cycles: Door components and operators capable of operating for not less than 50,000. One operation cycle is complete when a door is opened from the closed position to the fully open position and returned to the closed position.
3. Slat Material: Type 6F, (Exterior/Interior): Galvanized steel/galvanized steel; 18/24 gauge, ASTM A653 Commercial Quality, with G-90 zinc coating.

   a. Insulation: 7/8-inch foamed-in-place, closed-cell urethane.
   b. Total Slat Thickness: 15/16-inch.

4. Bottom Bar: Reinforced extruded aluminum interior face with full depth insulation and exterior skin slat to match curtain material and gauge.
5. Fabricate interlocking sections with high strength nylon endlocks on alternate slats each secured with two 1/4" rivets. Provide windlocks as required to meet specified wind load.
6. Exterior Slat Finish: Baked-on polyester powder coat; color selection by the Architect.
7. Bottom Bar Finish: Match slats.
8. Design Load: Doors to resist 20 mph wind load.

C. Guides: Fabricate with minimum 3/16-inch structural steel angles. Provide windlock bars of same material when windlocks are required to meet specified wind load.

D. Counterbalance Shaft Assembly:

1. Barrel: Steel pipe capable of supporting curtain load with maximum deflection of 0.03 inches per foot of width.
2. Spring Balance: Oil-tempered, heat-treated steel helical torsion spring assembly designed for proper balance of door to ensure that maximum effort to operate will not exceed 25 lbs. Provide wheel for applying and adjusting spring torque.

E. Brackets: Fabricate from minimum 3/16-inch steel plate with permanently lubricated ball or roller bearings at rotating support points to support counterbalance shaft assembly and form end closures.

F. Hood: 24-gauge galvanized steel, with reinforced top and bottom edges. Provide minimum 1/4-inch steel intermediate support brackets as required to prevent excessive sag.

G. Weather/Sensing Edge: Provide automatic reversing control by automatic sensing switch within neoprene or rubber astragal extending full width of door bottom bar.

1. Provide “LiteTouch” self-monitoring sensing edge system. Contact with rubber profile will interrupt contained infrared light beam, signaling door operator to immediately stop downward travel and reverse direction to fully opened position.

H. Motor-Operated Doors:

1. Supply Cornell Model MG, heavy-duty, UL-listed, gearhead hoist-type operator (MGR 75).
2. Rated 3/4 HP, 120 Volts, 1 Phase.
3. Provide UL-listed electric door operator assembly of size and capacity recommended by door manufacturer; complete with electric motor and factory pre-wired motor controls, worm-gear reduction unit, and solenoid operated brake.

NOT FOR BIDDING PURPOSES

4. Motor shall be high starting torque, continuous duty, industrial type, protected against overload by current-sensing or thermal overload device. Speed reduction shall be worm-gear-in-oil-bath gear reducer with synthetic "All Climate" oil. Shall provide 45:1 speed reduction. Door drive shall utilize minimum #50 roller chain and sprockets.
5. Operator shall be equipped with electrically interlocked floor level disconnect and chain hoist for manual operation and electric solenoid-actuated brake to stop motor and hold door in position. 6. Operator shall be capable of driving door at a speed of 8 to 9 inches per second.
6. Fully adjustable, driven linear type limit switch mechanism shall synchronize operator with door. Low friction nylon limit nuts fitted on threaded steel shaft, rotating on iolite self-lubricating bronze bushings.
7. Motor shall be removable without affecting limit switch settings.
8. Operator Controls:

    a. Exterior Control Station: Surface-mounted, "Open/Close/Stop" push buttons with keyed lock-out, not master keyable; NEMA 4.

2.5 MATERIALS, GENERAL

A. Electrical Components, Devices, and Accessories: Listed and labeled as defined in NFPA 70, by a qualified testing agency, and marked for intended location and application.

2.6 GENERAL FINISH REQUIREMENTS

A. Comply with NAAMM/NOMMA 500 for recommendations for applying and designating finishes.

B. Appearance of Finished Work: Noticeable variations in same piece are not acceptable. Variations in appearance of adjoining components are acceptable if they are within the range of approved Samples and are assembled or installed to minimize contrast.

2.7 STEEL AND GALVANIZED-STEEL FINISHES

A. Baked-Enamel or Powder-Coat Finish: Manufacturer's standard baked-on finish consisting of prime coat and thermosetting topcoat. Comply with coating manufacturer's written instructions for cleaning, pretreatment, application, and minimum dry film thickness.

1. Color as selected by the Architect.

PART 3 - EXECUTION

3.1 EXAMINATION

A. Examine substrates areas and conditions, with Installer present, for compliance with requirements for substrate construction and other conditions affecting performance of the Work.

B. Examine locations of electrical connections.

C. Proceed with installation only after unsatisfactory conditions have been corrected.

NOT FOR BIDDING PURPOSES

3.2 INSTALLATION

A. Install overhead coiling doors and operating equipment complete with necessary hardware, anchors, inserts, hangers, and equipment supports; according to manufacturer's written instructions and as specified.

B. Install overhead coiling doors, hoods, and operators at the mounting locations indicated for each door.

C. Accessibility: Install overhead coiling doors, switches, and controls along accessible routes in compliance with regulatory requirements for accessibility.

D. Power-Operated Doors: Install according to UL 325.

3.3 ADJUSTING

A. Adjust hardware and moving parts to function smoothly so that doors operate easily, free of warp, twist, or distortion.

B. Lubricate bearings and sliding parts as recommended by manufacturer.

C. Adjust seals to provide weathertight fit around entire perimeter.

3.4 DEMONSTRATION

A. Engage a factory-authorized service representative to train Owner's maintenance personnel to adjust, operate, and maintain overhead coiling doors.

END OF SECTION 08 33 23

NOT FOR BIDDING PURPOSES

NOT FOR BIDDING PURPOSES

SECTION 08 41 13

ALUMINUM-FRAMED ENTRANCES AND STOREFRONTS

PART 1 - GENERAL

1.1 RELATED DOCUMENTS

A. Drawings and general provisions of the Contract, including General and Supplementary Conditions and Division 01 Specification Sections, apply to this Section.

1.2 SUMMARY

A. Section Includes:

1. Storefront framing.
2. Manual-swing entrance doors.

1.3 PREINSTALLATION MEETINGS

A. Preinstallation Conference: Conduct conference at Project site.

1.4 ACTION SUBMITTALS

A. Product Data: For each type of product.

1. Include construction details, material descriptions, dimensions of individual components and profiles, and finishes.

B. Shop Drawings: For aluminum-framed entrances and storefronts. Include plans, elevations, sections, full-size details, and attachments to other work.

1. Include details of provisions for assembly expansion and contraction and for draining moisture occurring within the assembly to the exterior.
2. Include full-size isometric details of each type of vertical-to-horizontal intersection of aluminum-framed entrances and storefronts, showing the following:

a. Joinery, including concealed welds.
b. Anchorage.
c. Expansion provisions.
d. Glazing.
e. Flashing and drainage.

3. Show connection to and continuity with adjacent thermal, weather, air, and vapor barriers.

C. Samples for Verification: For each type of exposed finish required, in manufacturer's standard sizes.

D. Entrance Door Hardware Schedule: Prepared by or under supervision of supplier, detailing fabrication and assembly of entrance door hardware, as well as procedures and diagrams. Coordinate final entrance door hardware schedule with doors, frames, and related work to ensure proper size, thickness, hand, function, and finish of entrance door hardware.

1.5 INFORMATIONAL SUBMITTALS

A. Qualification Data: For Installer.

B. Energy Performance Certificates: For aluminum-framed entrances and storefronts, accessories, and components, from manufacturer.

1. Basis for Certification: NFRC-certified energy performance values for each aluminum-framed entrance and storefront.

C. Product Test Reports: For aluminum-framed entrances and storefronts, for tests performed by manufacturer and witnessed by a qualified testing agency.

D. Field quality-control reports.

E. Sample warranties.

1.6 CLOSEOUT SUBMITTALS

A. Maintenance Data: For aluminum-framed entrances and storefronts to include in maintenance manuals.

1.7 QUALITY ASSURANCE

A. Installer Qualifications: An entity that employs installers and supervisors who are trained and approved by manufacturer.

B. Product Options: Information on Drawings and in Specifications establishes requirements for aesthetic effects and performance characteristics of assemblies. Aesthetic effects are indicated by dimensions, arrangements, alignment, and profiles of components and assemblies as they relate to sightlines, to one another, and to adjoining construction.

1. Do not change intended aesthetic effects, as judged solely by Architect, except with Architect's approval. If changes are proposed, submit comprehensive explanatory data to Architect for review.

1.8 MOCKUPS

A. Mockups: Build mockups to verify selections made under Sample submittals and to demonstrate aesthetic effects and set quality standards for fabrication and installation.

1. Build in-place mockup of typical wall area as shown on Drawings.
2. Testing shall be performed on mockups according to requirements in "Field Quality Control" Article.
3. Approval of mockups does not constitute approval of deviations from the Contract Documents contained in mockups unless Architect specifically approves such deviations in writing.

NOT FOR BIDDING PURPOSES

1.9 WARRANTY

A. Special Warranty: Manufacturer agrees to repair or replace components of aluminum-framed entrances that do not comply with requirements or that fail in materials or workmanship within specified warranty period.

1. Warranty Period: Five years from date of Substantial Completion.

B. Special Finish Warranty: Standard form in which manufacturer agrees to repair finishes or replace aluminum that shows evidence of deterioration of factory-applied finishes within specified warranty period.

1. Warranty Period: 10 years from date of Substantial Completion.

PART 2 - PRODUCTS

2.1 PERFORMANCE REQUIREMENTS

A. General Performance: Comply with performance requirements specified, as determined by testing of aluminum-framed entrances and storefronts representing those indicated for this Project without failure due to defective manufacture, fabrication, installation, or other defects in construction.

1. Aluminum-framed entrances and storefronts shall withstand movements of supporting structure including, but not limited to, story drift, twist, column shortening, long-term creep, and deflection from uniformly distributed and concentrated live loads.
2. Failure also includes the following:

a. Thermal stresses transferring to building structure.
b. Glass breakage.
c. Noise or vibration created by wind and thermal and structural movements.
d. Loosening or weakening of fasteners, attachments, and other components.
e. Failure of operating units.

B. Structural Loads:

1. Wind Loads: As indicated on Drawings.
2. Other Design Loads: As indicated on Drawings.

C. Deflection of Framing Members: At design wind pressure, as follows:

1. Deflection Normal to Wall Plane: Limited to 1/175 of clear span for spans of up to 13 feet 6 inches and to 1/240 of clear span plus 1/4 inch for spans greater than 13 feet 6 inches or an amount that restricts edge deflection of individual glazing lites to 3/4 inch, whichever is less.

A. Structural: Test according to ASTM E 330 as follows:

1. When tested at positive and negative wind-load design pressures, assemblies do not evidence deflection exceeding specified limits.
2. When tested at 150 percent of positive and negative wind-load design pressures, assemblies, including anchorage, do not evidence material failures, structural distress, or permanent deformation of main framing members exceeding 0.2 percent of span.
3. Test Durations: As required by design wind velocity, but not less than 10 seconds.

NOT FOR BIDDING PURPOSES

E. Air Infiltration: Test according to ASTM E 283 for infiltration as follows:

1. Fixed Framing and Glass Area:

a. Maximum air leakage of 0.06 cfm/sq. ft. at a static-air-pressure differential of 6.24 lbf/sq. ft.

2. Entrance Doors:

a. Pair of Doors: Maximum air leakage of 1.0 cfm/sq. ft. at a static-air-pressure differential of 1.57 lbf/sq. ft.
b. Single Doors: Maximum air leakage of 0.5 cfm/sq. ft. at a static-air-pressure differential of 1.57 lbf/sq. ft.

F. Water Penetration under Static Pressure: Test according to ASTM E 331 as follows:

1. No evidence of water penetration through fixed glazing and framing areas when tested according to a minimum static-air-pressure differential of 20 percent of positive wind-load design pressure, but not less than 8 lbf/sq. ft.

G. Energy Performance: Certify and label energy performance according to NFRC as follows:

1. Thermal Transmittance (U-factor): Fixed glazing and framing areas shall have U-factor of not more than 0.44 Btu/sq. ft. x h x deg F as determined according to NFRC 100.
2. Condensation Resistance: Fixed glazing and framing areas shall have an NFRC-certified condensation resistance rating of no less than 62 (frame) as determined according to NFRC 500.

H. Thermal Movements: Allow for thermal movements resulting from ambient and surface temperature changes:

1. Temperature Change: 120 deg F, ambient; 180 deg F, material surfaces.

2.2 STOREFRONT SYSTEMS

A. Basis-of-Design Product: Subject to compliance with requirements, provide Kawneer North America; Heavy Wall Trifab VersaGlaze Framing System l, or a comparable product by one of the following:

1. EFCO Corporation.
2. Oldcastle BuildingEnvelope.
3. YKK AP America Inc.

B. Framing Members: Manufacturer's extruded-or formed-aluminum framing members of thickness required and reinforced as required to support imposed loads.

1. Exterior Framing Construction: Thermally broken.
2. Interior Vestibule Framing Construction: Nonthermal.
3. Glazing System: Retained mechanically with gaskets on four sides.
4. Glazing Plane: Center.
5. Finish: High-performance organic finish.
6. Fabrication Method: Field-fabricated stick system.
7. Aluminum: Alloy and temper recommended by manufacturer for type of use and finish indicated.
8. Steel Reinforcement: As required by manufacturer.

NOT FOR BIDDING PURPOSES

C. Backer Plates: Manufacturer's standard, continuous backer plates for framing members, if not integral, where framing abuts adjacent construction.

D. Brackets and Reinforcements: Manufacturer's standard high-strength aluminum with nonstaining, nonferrous shims for aligning system components.

2.3 ENTRANCE DOOR SYSTEMS

A. Basis-of-Design Product: Subject to compliance with requirements, provide Kawneer; 500 Heavy Wall Entrances, or a comparable product by one of the following:

1. EFCO Corporation.
2. Oldcastle BuildingEnvelope.
3. YKK AP America Inc.

B. Entrance Doors: Manufacturer's standard glazed entrance doors for manual-swing operation.

1. Door Construction: 2-inch overall thickness, with 3/16-inch-thick, extruded-aluminum tubular rail and stile members. Mechanically fasten corners with reinforcing brackets that are deeply penetrated and fillet welded or that incorporate concealed tie rods.
2. Door Design: As indicated.
3. Glazing Stops and Gaskets: Snap-on, extruded-aluminum stops and preformed gaskets.

a. Provide nonremovable glazing stops on outside of door.

2.4 ENTRANCE DOOR HARDWARE

A. Entrance Door Hardware: Hardware not specified in this Section is specified in Section 087100 "Door Hardware."

2.5 GLAZING

A. Glazing: Comply with Section 088000 "Glazing."

B. Glazing Gaskets: Manufacturer's standard sealed-corner pressure-glazing system of black, resilient elastomeric glazing gaskets, setting blocks, and shims or spacers.

C. Glazing Sealants: As recommended by manufacturer.

2.6 MATERIALS

A. Sheet and Plate: ASTM B 209.

B. Extruded Bars, Rods, Profiles, and Tubes: ASTM B 221.

C. Extruded Structural Pipe and Tubes: ASTM B 429/B 429M.

D. Structural Profiles: ASTM B 308/B 308M.

E. Steel Reinforcement:

1. Structural Shapes, Plates, and Bars: ASTM A 36/A 36M.

NOT FOR BIDDING PURPOSES

2. Cold-Rolled Sheet and Strip: ASTM A 1008/A 1008M.
3. Hot-Rolled Sheet and Strip: ASTM A 1011/A 1011M.
4. Primer: Manufacturer's standard zinc-rich, corrosion-resistant primer complying with SSPC-PS Guide No. 12.00; applied immediately after surface preparation and pretreatment. Select surface preparation methods according to recommendations in SSPC-SP COM, and prepare surfaces according to applicable SSPC standard.

2.7 ACCESSORIES

A. Fasteners and Accessories: Manufacturer's standard corrosion-resistant, nonstaining, nonbleeding fasteners and accessories compatible with adjacent materials.

1. Use self-locking devices where fasteners are subject to loosening or turning out from thermal and structural movements, wind loads, or vibration.
2. Reinforce members as required to receive fastener threads.

B. Anchors: Three-way adjustable anchors with minimum adjustment of 1 inch that accommodate fabrication and installation tolerances in material and finish compatible with adjoining materials and recommended by manufacturer.

1. Concrete and Masonry Inserts: Hot-dip galvanized cast-iron, malleable-iron, or steel inserts complying with ASTM A 123/A 123M or ASTM A 153/A 153M requirements.

C. Concealed Flashing: Manufacturer's standard corrosion-resistant, nonstaining, nonbleeding flashing compatible with adjacent materials.

D. Bituminous Paint: Cold-applied asphalt-mastic paint containing no asbestos, formulated for 30mil thickness per coat.

2.8 FABRICATION

A. Form or extrude aluminum shapes before finishing.

B. Weld in concealed locations to greatest extent possible to minimize distortion or discoloration of finish. Remove weld spatter and welding oxides from exposed surfaces by descaling or grinding.

C. Fabricate components that, when assembled, have the following characteristics:

1. Profiles that are sharp, straight, and free of defects or deformations.
2. Accurately fitted joints with ends coped or mitered.
3. Physical and thermal isolation of glazing from framing members.
4. Accommodations for thermal and mechanical movements of glazing and framing to maintain required glazing edge clearances.
5. Provisions for field replacement of glazing from exterior.
6. Fasteners, anchors, and connection devices that are concealed from view to greatest extent possible.

NOT FOR BIDDING PURPOSES

D. Mechanically Glazed Framing Members: Fabricate for flush glazing without projecting stops.

E. Entrance Door Frames: Reinforce as required to support loads imposed by door operation and for installing entrance door hardware.

1. At interior and exterior doors, provide compression weather stripping at fixed stops.

F. Entrance Doors: Reinforce doors as required for installing entrance door hardware.

1. At pairs of exterior doors, provide sliding-type weather stripping retained in adjustable strip and mortised into door edge.
2. At exterior doors, provide weather sweeps applied to door bottoms.

G. Entrance Door Hardware Installation: Factory install entrance door hardware to the greatest extent possible. Cut, drill, and tap for factory-installed entrance door hardware before applying finishes.

H. After fabrication, clearly mark components to identify their locations in Project according to Shop Drawings.

2.9 ALUMINUM FINISHES

A. High-Performance Organic Finish: Two-coat fluoropolymer finish complying with AAMA 2605 and containing not less than 70 percent PVDF or FEVE resin by weight in color coat. Prepare, pretreat, and apply coating to exposed metal surfaces to comply with coating and resin manufacturers' written instructions.

1. Color: White, gloss as selected by Architect.

PART 3 - EXECUTION

3.1 EXAMINATION

A. Examine areas, with Installer present, for compliance with requirements for installation tolerances and other conditions affecting performance of the Work.

B. Proceed with installation only after unsatisfactory conditions have been corrected.

3.2 INSTALLATION

A. General:

1. Comply with manufacturer's written instructions.
2. Do not install damaged components.
3. Fit joints to produce hairline joints free of burrs and distortion.
4. Rigidly secure nonmovement joints.
5. Install anchors with separators and isolators to prevent metal corrosion and electrolytic deterioration and to prevent impeding movement of moving joints.
6. Seal perimeter and other joints watertight unless otherwise indicated.

NOT FOR BIDDING PURPOSES

B. Metal Protection:

1. Where aluminum is in contact with dissimilar metals, protect against galvanic action by painting contact surfaces with materials recommended by manufacturer for this purpose or installing nonconductive spacers.
2. Where aluminum is in contact with concrete or masonry, protect against corrosion by painting contact surfaces with bituminous paint.

C. Set continuous sill members and flashing in full sealant bed as specified in Section 079200 "Joint Sealants" to produce weathertight installation.

D. Install components plumb and true in alignment with established lines and grades.

E. Install glazing as specified in Section 088000 "Glazing."

F. Entrance Doors: Install doors to produce smooth operation and tight fit at contact points.

1. Exterior Doors: Install to produce weathertight enclosure and tight fit at weather stripping.

G. Erection Tolerances: Install aluminum-framed entrances and storefronts to comply with the following maximum tolerances:

1. Plumb: 1/8 inch in 10 feet; 1/4 inch in 40 feet.
2. Level: 1/8 inch in 20 feet; 1/4 inch in 40 feet.
3. Alignment:

   a. Where surfaces about in line or are separated by reveal or protruding element up to 1/2-inch-wide, limit offset from true alignment to 1/16 inch.
   b. Where surfaces are separated by reveal or protruding element from 1/2 to 1 inch wide, limit offset from true alignment to 1/8 inch.
   c. Where surfaces are separated by reveal or protruding element of 1-inch wide or more, limit offset from true alignment to 1/4 inch.

4. Location: Limit variation from plane to 1/8 inch in 12 feet; 1/2 inch over total length.

3.3FIELD QUALITY CONTROL

A. Testing Agency: Engage a qualified testing agency to perform tests and inspections.

B. Field Quality-Control Testing: Perform the following test on aluminum-framed entrances.

1. Water-Spray Test: Before installation of interior finishes has begun, areas designated by Architect shall be tested according to AAMA 501.2 and shall not evidence water penetration.

   a. Perform a minimum of three tests in areas as directed by Architect.

2. Air Infiltration: ASTM E 783 at 1.5 times the rate specified for laboratory testing in "Performance Requirements" Article but not more than 0.09 cfm/sq. ft. at a static-airpressure differential of 1.57 lbf/sq. ft.

NOT FOR BIDDING PURPOSES

a. Perform a minimum of two tests in areas as directed by Architect.

3. Water Penetration: ASTM E 1105 at a minimum uniform and cyclic static-air-pressure differential of 0.67 times the static-air-pressure differential specified for laboratory testing in "Performance Requirements" Article, but not less than 6.24 lbf/sq. ft., and shall not evidence water penetration.

C. Aluminum-framed entrances will be considered defective if they do not pass tests and inspections.

D. Prepare test and inspection reports.

END OF SECTION 08 41 13

NOT FOR BIDDING PURPOSES

THIS PAGE INTENTIONALLY LEFT BLANK

NOT FOR BIDDING PURPOSES

SECTION 08 51 13

ALUMINUM WINDOWS

NOT FOR BIDDING PURPOSES

PART 1 - GENERAL

1.1 RELATED DOCUMENTS

A. Drawings and general provisions of the Contract, including General and Supplementary Conditions and Division 01 Specification Sections, apply to this Section.

1.2 SUMMARY

A. Section includes aluminum windows for exterior locations.

1.3 PREINSTALLATION MEETINGS

A. Preinstallation Conference: Conduct conference at Project site.

1. Review and finalize construction schedule and verify availability of materials, Installer's personnel, equipment, and facilities needed to make progress and avoid delays.
2. Review and discuss the finishing of aluminum windows that is required to be coordinated with the finishing of other aluminum work for color and finish matching.
3. Review, discuss, and coordinate the interrelationship of aluminum windows with other exterior wall components. Include provisions for anchorage, flashing, sealing perimeters, and protecting finishes.
4. Review and discuss the sequence of work required to construct a watertight and weathertight exterior building envelope.
5. Inspect and discuss the condition of substrate and other preparatory work performed by other trades.

1.4 ACTION SUBMITTALS

A. Product Data: For each type of product.

1. Include construction details, material descriptions, glazing and fabrication methods, dimensions of individual components and profiles, hardware, and finishes for aluminum windows.

B. Shop Drawings: For aluminum windows.

1. Include plans, elevations, sections, accessories, operational clearances and details of installation, including anchor, flashing, and sealant installation.

C. Samples for Initial Selection: For units with factory-applied color finishes.

D. Samples for Verification: For aluminum windows and components required, showing full range of color variations for finishes, and prepared on Samples of size indicated below:

1. Exposed Finishes: 2 by 4 inches.

A. Product Schedule: For aluminum windows. Use same designations indicated on Drawings.

1.5 INFORMATIONAL SUBMITTALS

A. Qualification Data: For manufacturer and Installer.

B. Product Test Reports: For each type of aluminum window, for tests performed by a qualified testing agency.

C. Field quality-control reports.

D. Sample Warranties: For manufacturer's warranties.

1.6 QUALITY ASSURANCE

A. Manufacturer Qualifications: A manufacturer capable of fabricating aluminum windows that meet or exceed performance requirements indicated and of documenting this performance by test reports, and calculations.

B. Installer Qualifications: An installer acceptable to aluminum window manufacturer for installation of units required for this Project.

C. Mockups: Build mockups to verify selections made under Sample submittals and to demonstrate aesthetic effects and set quality standards for materials and execution.

1. Build mockup of typical wall area as shown on Drawings, or otherwise indicated.
2. Approval of mockups does not constitute approval of deviations from the Contract Documents contained in mockups unless Architect specifically approves such deviations in writing.

1.7 WARRANTY

A. Manufacturer's Warranty: Manufacturer agrees to repair or replace aluminum windows that fail in materials or workmanship within specified warranty period.

1. Failures include, but are not limited to, the following:

a. Failure to meet performance requirements.
b. Structural failures including excessive deflection, water leakage, condensation, and air infiltration.
c. Deterioration of materials and finishes beyond normal weathering.
d. Failure of insulating glass.

2. Warranty Period:

a. Window: 10 years from date of Substantial Completion.
b. Glazing Units: 10 years from date of Substantial Completion.
c. Aluminum Finish: 15 years from date of Substantial Completion.

NOT FOR BIDDING PURPOSES

PART 2 - PRODUCTS

2.1 MANUFACTURERS

A. Source Limitations: Obtain aluminum windows from single source from single manufacturer.

2.2 WINDOW PERFORMANCE REQUIREMENTS

B. Product Standard: Comply with AAMA/WDMA/CSA 101/I.S.2/A440 for definitions and minimum standards of performance, materials, components, accessories, and fabrication unless more stringent requirements are indicated.

1. Window Certification: AMMA certified with label attached to each window.

C. Performance Class and Grade: AAMA/WDMA/CSA 101/I.S.2/A440 as follows:

— Minimum Performance Class: As indicated.

— Minimum Performance Grade: As indicated.

— C. Thermal Movements: Provide aluminum windows, including anchorage, that allow for thermal movements resulting from the following maximum change (range) in ambient and surface temperatures by preventing buckling, opening of joints, overstressing of components, failure of joint sealants, failure of connections, and other detrimental effects. Base engineering calculation on surface temperatures of materials due to both solar heat gain and nighttime-sky heat loss.

— 1. Temperature Change: 120 deg F, ambient; 180 deg F material surfaces.

2.3 ALUMINUM WINDOWS

A. Basis-of-Design Product: Subject to compliance with requirements, provide EFCO Corporation; Series; 6711(T) or a comparable product by one of the following:

1. Kawneer North America.
2. Traco.

A. Operating Types: Provide the following operating types in locations indicated on Drawings:

1. Fixed.

C. Frames and Sashes: Aluminum extrusions complying with AAMA/WDMA/CSA 101/I.S.2/A440.

1. Thermally Improved Construction: Fabricate frames, sashes, and muntins with an integral, concealed, low-conductance thermal barrier located between exterior materials and window members exposed on interior side in a manner that eliminates direct metal-to-metal contact.

D. Insulating-Glass Units: ASTM E 2190, certified through IGCC as complying with requirements of IGCC.

1. Glass: ASTM C 1036, Type 1, Class 1, q3.

a. Tint: Clear.
b. Kind: Fully tempered where indicated on Drawings and where required by code.

NOT FOR BIDDING PURPOSES

1. Lites: Two.
2. Filling: Fill space between glass lites with air.
3. Low-E Coating: On #2 surface.

E. Glazing System: Manufacturer's standard factory-glazing system that produces weathertight seal.

F. Hardware, General: Provide manufacturer's standard hardware fabricated from aluminum, stainless steel, carbon steel complying with AAMA 907, or other corrosion-resistant material compatible with adjacent materials; designed to smoothly operate, tightly close, and securely lock windows, and sized to accommodate sash weight and dimensions.

1. Exposed Hardware Color and Finish: As selected by Architect from manufacturer's full range.

G. Weather Stripping: Provide full-perimeter weather stripping for each operable sash unless otherwise indicated.

H. Fasteners: Noncorrosive and compatible with window members, trim, anchors, and other components.

1. Exposed Fasteners: Do not use exposed fasteners to greatest extent possible. For application of hardware, use fasteners that match finish hardware being fastened.

2.4 ACCESSORIES

A. Dividers (False Muntins): Provide extruded-aluminum divider grilles in designs indicated for each sash lite.

1. Type: Permanently located between insulating-glass lites.
2. Pattern: As indicated on Drawings.
3. Profile: As selected by Architect from manufacturer's full range.

B. Subsills: Thermally broken, extruded-aluminum subsills in configurations indicated on Drawings; watertight.

C. Interior Trim: Extruded-aluminum profiles in sizes and configurations indicated on Drawings.

D. Panning Trim: Extruded-aluminum profiles in sizes and configurations indicated on Drawings.

E. Receptor System: Two-piece, snap-together, thermally broken, extruded-aluminum receptor system that anchors windows in place.

2.5 FABRICATION

A. Fabricate aluminum windows in sizes indicated. Include a complete system for assembling components and anchoring windows.

B. Glaze aluminum windows in the factory.

C. Weather strip each operable sash to provide weathertight installation.

NOT FOR BIDDING PURPOSES

D. Weep Holes: Provide weep holes and internal passages to conduct infiltrating water to exterior.

E. Mullions: Provide mullions and cover plates, matching window units, complete with anchors for support to structure and installation of window units. Allow for erection tolerances and provide for movement of window units due to thermal expansion and building deflections, as indicated. Provide mullions and cover plates capable of withstanding design wind loads of window units.

F. Complete fabrication, assembly, finishing, hardware application, and other work in the factory to greatest extent possible. Disassemble components only as necessary for shipment and installation.

2.6 GENERAL FINISH REQUIREMENTS

A. Comply with NAAMM's "Metal Finishes Manual" for recommendations for applying and designating finishes.

B. Protect mechanical finishes on exposed surfaces from damage by applying a strippable, temporary protective covering before shipping.

C. Appearance of Finished Work: Noticeable variations in same piece are not acceptable. Variations in appearance of adjoining components are acceptable if they are within the range of approved Samples and are assembled or installed to minimize contrast.

2.7 ALUMINUM FINISHES

A. High-Performance Organic Finish: Two-coat fluoropolymer finish complying with AAMA 2605 and containing not less than 70 percent PVDF or FEVE resin by weight in color coat. Prepare, pretreat, and apply coating to exposed metal surfaces to comply with coating and resin manufacturers' written instructions.

1. Color: White, gloss as selected by Architect.

PART 3 - EXECUTION

3.1 EXAMINATION

A. Examine openings, substrates, structural support, anchorage, and conditions, with Installer present, for compliance with requirements for installation tolerances and other conditions affecting performance of the Work.

B. Verify rough opening dimensions, levelness of sill plate, and operational clearances.

C. Examine wall flashings, vapor retarders, water and weather barriers, and other built-in components to ensure weathertight window installation.

D. Proceed with installation only after unsatisfactory conditions have been corrected.

NOT FOR BIDDING PURPOSES

3.2 INSTALLATION

A. Comply with manufacturer's written instructions for installing windows, accessories, and other components. For installation procedures and requirements not addressed in manufacturer's written instructions, comply with installation requirements in ASTM E 2112.

B. Install windows level, plumb, square, true to line, without distortion or impeding thermal movement, anchored securely in place to structural support, and in proper relation to wall flashing and other adjacent construction to produce weathertight construction.

C. Install windows and components to drain condensation, water penetrating joints, and moisture migrating within windows to the exterior.

D. Separate aluminum and other corrodible surfaces from sources of corrosion or electrolytic action at points of contact with other materials.

3.3 FIELD QUALITY CONTROL

A. Testing Agency: Engage a qualified testing agency to perform tests and inspections.

1. Testing and inspecting agency will interpret tests and state in each report whether tested work complies with or deviates from requirements.

B. Testing Services: Testing and inspecting of installed windows shall take place as follows:

1. Testing Methodology: Testing of windows for air infiltration and water resistance shall be performed according to AAMA 502, method B.
2. Air-Infiltration Testing:

   a. Test Pressure: That required to determine compliance with AAMA/WDMA/CSA 101/I.S.2/A440 performance class indicated.
   b. Allowable Air-Leakage Rate: 1.5 times the applicable AAMA/WDMA/CSA 101/I.S.2/A440 rate for product type and performance class rounded down to one decimal place.

3. Water-Resistance Testing:

   a. Test Pressure: Two-thirds times test pressure required to determine compliance with AAMA/WDMA/CSA 101/I.S.2/A440 performance grade indicated.
   b. Allowable Water Infiltration: No water penetration.

4. Testing Extent: Three windows of each type as selected by Architect and a qualified independent testing and inspecting agency. Windows shall be tested after perimeter sealants have cured.
5. Test Reports: Prepared according to AAMA 502.

C. Windows will be considered defective if they do not pass tests and inspections.

D. Prepare test and inspection reports.

3.4 ADJUSTING, CLEANING, AND PROTECTION

A. Clean exposed surfaces immediately after installing windows. Avoid damaging protective coatings and finishes. Remove excess sealants, glazing materials, dirt, and other substances.

NOT FOR BIDDING PURPOSES

1. Keep protective films and coverings in place until final cleaning.

B. Remove and replace glass that has been broken, chipped, cracked, abraded, or damaged during construction period.

C. Protect window surfaces from contact with contaminating substances resulting from construction operations. If contaminating substances do contact window surfaces, remove contaminants immediately according to manufacturer's written instructions.

END OF SECTION 08 51 13

NOT FOR BIDDING PURPOSES

THIS PAGE INTENTIONALLY LEFT BLANK

NOT FOR BIDDING PURPOSES

SECTION 08 71 00

DOOR HARDWARE

NOT FOR BIDDING PURPOSES

PART 1 - GENERAL

1.1 SUMMARY

A. This Section includes commercial door hardware for the following:

1. Swinging doors.
2. Other doors to the extent indicated.

B. Door hardware includes, but is not necessarily limited to, the following:

1. Mechanical door hardware.
2. Electromechanical door hardware.
3. Cylinders specified for doors in other sections.

C. Codes and References: Comply with the version year adopted by the Authority Having Jurisdiction.

1. ANSI A117.1 - Accessible and Usable Buildings and Facilities.
2. ICC/IBC - International Building Code.
3. NFPA 70 - National Electrical Code.
4. NFPA 80 - Fire Doors and Windows.
5. NFPA 101 - Life Safety Code.
6. NFPA 105 - Installation of Smoke Door Assemblies.
7. State Building Codes, Local Amendments.

A. Standards: All hardware specified herein shall comply with the following industry standards:

1. ANSI/BHMA Certified Product Standards - A156 Series
2. UL10C – Positive Pressure Fire Tests of Door Assemblies

1.2 SUBMITTALS

A. Product Data: Manufacturer's product data sheets including installation details, material descriptions, dimensions of individual components and profiles, operational descriptions and finishes.

B. Door Hardware Schedule: Prepared by or under the supervision of supplier, detailing fabrication and assembly of door hardware, as well as procedures and diagrams. Coordinate the final Door Hardware Schedule with doors, frames, and related work to ensure proper size, thickness, hand, function, and finish of door hardware.

1. Format: Comply with scheduling sequence and vertical format in DHI's "Sequence and Format for the Hardware Schedule."
2. Organization: Organize the Door Hardware Schedule into door hardware sets indicating complete designations of every item required for each door or opening. Organize door hardware sets in same

order as in the Door Hardware Sets at the end of Part 3. Submittals that do not follow the same format and order as the Door Hardware Sets will be rejected and subject to resubmission.

3. Content: Include the following information:

   a. Type, style, function, size, label, hand, and finish of each door hardware item.
   b. Manufacturer of each item.
   c. Fastenings and other pertinent information.
   d. Location of door hardware set, cross-referenced to Drawings, both on floor plans and in door and frame schedule.
   e. Explanation of abbreviations, symbols, and codes contained in schedule.
   f. Mounting locations for door hardware.
   g. Door and frame sizes and materials.
   h. Warranty information for each product.

4. Submittal Sequence: Submit the final Door Hardware Schedule at earliest possible date, particularly where approval of the Door Hardware Schedule must precede fabrication of other work that is critical in the Project construction schedule. Include Product Data, Samples, Shop Drawings of other work affected by door hardware, and other information essential to the coordinated review of the Door Hardware Schedule.

A. Shop Drawings: Details of electrified access control hardware indicating the following:

   1. Wiring Diagrams: Upon receipt of approved schedules, submit detailed system wiring diagrams for power, signaling, monitoring, communication, and control of the access control system electrified hardware. Differentiate between manufacturer-installed and field-installed wiring. Include the following:

      a. Elevation diagram of each unique access controlled opening showing location and interconnection of major system components with respect to their placement in the respective door openings.
      b. Complete (risers, point-to-point) access control system block wiring diagrams.
      c. Wiring instructions for each electronic component scheduled herein.

   2. Electrical Coordination: Coordinate with related sections the voltages and wiring details required at electrically controlled and operated hardware openings.

D. Proof of Certification: Provide copy of manufacturer(s) official certification or accreditation document indicating proof of status as a qualified and authorized provider of the primary Integrated Wiegand Access Control Products.

E. Keying Schedule: After a keying meeting with the owner has taken place prepare a separate keying schedule detailing final instructions. Submit the keying schedule in electronic format. Include keying system explanation, door numbers, key set symbols, hardware set numbers and special instructions. Owner must approve submitted keying schedule prior to the ordering of permanent cylinders/cores.

F. Informational Submittals:

   1. Product Test Reports: Indicating compliance with cycle testing requirements, based on evaluation of comprehensive tests performed by manufacturer and witnessed by a qualified independent testing agency.

G. Operating and Maintenance Manuals: Provide manufacturers operating and maintenance manuals for each item comprising the complete door hardware installation in quantity as required in Division 01, Closeout Submittals.

NOT FOR BIDDING PURPOSES

1.3 QUALITY ASSURANCE

A. Manufacturers Qualifications: Engage qualified manufacturers with a minimum 5 years of documented experience in producing hardware and equipment similar to that indicated for this Project and that have a proven record of successful in-service performance.

B. Installer Qualifications: A minimum 3 years documented experience installing both standard and electrified door hardware similar in material, design, and extent to that indicated for this Project and whose work has resulted in construction with a record of successful in-service performance.

C. Door Hardware Supplier Qualifications: Experienced commercial door hardware distributors with a minimum 5 years documented experience supplying both mechanical and electromechanical hardware installations comparable in material, design, and extent to that indicated for this Project. Supplier recognized as a factory direct distributor by the manufacturers of the primary materials with a warehousing facility in Project's vicinity. Supplier to have on staff a certified Architectural Hardware Consultant (AHC) available during the course of the Work to consult with Contractor, Architect, and Owner concerning both standard and electromechanical door hardware and keying.

B. Integrated Wiegand, Wireless, and IP-Enabled Access Control Products Supplier Qualifications: Integrated access control products and accessories are required to be supplied and installed through current members of the ASSA ABLOY "Authorized Channel Partner" (ACP) and "Certified Integrator" (CI) programs. Suppliers are to be factory trained, certified prior to project bid, and a direct purchaser of the specified product. Installers are to be factory trained, certified prior to project bid, and are responsible for commissioning, servicing, and warranting the installed equipment specified for the project.

C. Source Limitations: Obtain each type and variety of door hardware specified in this section from a single source unless otherwise indicated.

1. Electrified modifications or enhancements made to a source manufacturer's product line by a secondary or third party source will not be accepted.
2. Provide electromechanical door hardware from the same manufacturer as mechanical door hardware, unless otherwise indicated.

F. Each unit to bear third party permanent label demonstrating compliance with the referenced standards.

G. Keying Conference: Conduct conference to comply with requirements in Division 01 Section "Project Meetings." Keying conference to incorporate the following criteria into the final keying schedule document:

1. Function of building, purpose of each area and degree of security required.
2. Plans for existing and future key system expansion.
3. Requirements for key control storage and software.
4. Installation of permanent keys, cylinder cores and software.
5. Address and requirements for delivery of keys.

H. Pre-Submittal Conference: Conduct coordination conference in compliance with requirements in Division 01 Section "Project Meetings" with attendance by representatives of Supplier(s), Installer(s), and Contractor(s) to review proper methods and the procedures for receiving, handling, and installing door hardware.

1. Prior to installation of door hardware, conduct a project specific training meeting to instruct the installing contractors' personnel on the proper installation and adjustment of their respective products. Product training to be attended by installers of door hardware (including electromechanical hardware) for aluminum, hollow metal and wood doors. Training will include the

NOT FOR BIDDING PURPOSES

use of installation manuals, hardware schedules, templates and physical product samples as required.
2. Inspect and discuss electrical roughing-in, power supply connections, and other preparatory work performed by other trades.
3. Review sequence of operation narratives for each unique access controlled opening.
4. Review and finalize construction schedule and verify availability of materials.
5. Review the required inspecting, testing, commissioning, and demonstration procedures

I. At completion of installation, provide written documentation that components were applied to manufacturer's instructions and recommendations and according to approved schedule.

1.4 DELIVERY, STORAGE, AND HANDLING

A. Inventory door hardware on receipt and provide secure lock-up and shelving for door hardware delivered to Project site. Do not store electronic access control hardware, software or accessories at Project site without prior authorization.

B. Tag each item or package separately with identification related to the final Door Hardware Schedule, and include basic installation instructions with each item or package.

C. Deliver, as applicable, permanent keys, cylinders, cores, access control credentials, software and related accessories directly to Owner via registered mail or overnight package service. Instructions for delivery to the Owner shall be established at the "Keying Conference".

1.5 COORDINATION

A. Templates: Obtain and distribute to the parties involved templates for doors, frames, and other work specified to be factory prepared for installing standard and electrified hardware. Check Shop Drawings of other work to confirm that adequate provisions are made for locating and installing hardware to comply with indicated requirements.

B. Door Hardware and Electrical Connections: Coordinate the layout and installation of scheduled electrified door hardware and related access control equipment with required connections to source power junction boxes, low voltage power supplies, detection and monitoring hardware, and fire and detection alarm systems.

C. Door and Frame Preparation: Doors and corresponding frames are to be prepared, reinforced and pre-wired (if applicable) to receive the installation of the specified electrified, monitoring, signaling and access control system hardware without additional in-field modifications.

1.6 WARRANTY

A. General Warranty: Reference Division 01, General Requirements. Special warranties specified in this Article shall not deprive Owner of other rights Owner may have under other provisions of the Contract Documents and shall be in addition to, and run concurrent with, other warranties made by Contractor under requirements of the Contract Documents.

B. Warranty Period: Written warranty, executed by manufacturer(s), agreeing to repair or replace components of standard and electrified door hardware that fails in materials or workmanship within specified warranty period after final acceptance by the Owner. Failures include, but are not limited to, the following:

1. Structural failures including excessive deflection, cracking, or breakage.

NOT FOR BIDDING PURPOSES

2. Faulty operation of the hardware.
3. Deterioration of metals, metal finishes, and other materials beyond normal weathering.
4. Electrical component defects and failures within the systems operation.

C. Standard Warranty Period: One year from date of Substantial Completion, unless otherwise indicated.

D. Special Warranty Periods:

1. Twenty five years for manual surface door closer bodies.

1.7 MAINTENANCE SERVICE

A. Maintenance Tools and Instructions: Furnish a complete set of specialized tools and maintenance instructions as needed for Owner's continued adjustment, maintenance, and removal and replacement of door hardware.

PART 2 - PRODUCTS

2.1 SCHEDULED DOOR HARDWARE

A. General: Provide door hardware for each door to comply with requirements in Door Hardware Sets and each referenced section that products are to be supplied under.

B. Designations: Requirements for quantity, item, size, finish or color, grade, function, and other distinctive qualities of each type of door hardware are indicated in the Door Hardware Sets at the end of Part 3. Products are identified by using door hardware designations, as follows:

C. Named Manufacturer's Products: Product designation and manufacturer are listed for each door hardware type required for the purpose of establishing requirements. Manufacturers' names are abbreviated in the Door Hardware Schedule.

D. Products furnished, but not installed, under this Section include the following. Coordinating, purchasing, delivering, and scheduling remain requirements of this Section.

1. Permanent cylinders, cores, and keys to be installed by Owner.

E. Substitutions: Requests for substitution and product approval for inclusive mechanical and electromechanical door hardware in compliance with the specifications must be submitted in writing and in accordance with the procedures and time frames outlined in Division 01, Substitution Procedures. Approval of requests is at the discretion of the architect, owner, and their designated consultants.

2.2 HANGING DEVICES

A. Hinges: ANSI/BHMA A156.1 certified butt hinges with number of hinge knuckles as specified in the Door Hardware Sets.

1. Quantity: Provide the following hinge quantity, unless otherwise indicated:

a. Two Hinges: For doors with heights up to 60 inches.
b. Three Hinges: For doors with heights 61 to 90 inches.

NOT FOR BIDDING PURPOSES

c. Four Hinges: For doors with heights 91 to 120 inches.
d. For doors with heights more than 120 inches, provide 4 hinges, plus 1 hinge for every 30 inches of door height greater than 120 inches.

2. Hinge Size: Provide the following, unless otherwise indicated, with hinge widths sized for door thickness and clearances required:

a. Widths up to 3'0": 4-1/2" standard or heavy weight as specified.
b. Sizes from 3'1" to 4'0": 5" standard or heavy weight as specified.

3. Hinge Options: Comply with the following where indicated in the Hardware Sets or on Drawings:

a. Non-removable Pins: Provide set screw in hinge barrel that, when tightened into a groove in hinge pin, prevents removal of pin while door is closed; for the all out-swinging lockable doors.

4. Acceptable Manufacturers:

a. Hager Companies (HA).
b. McKinney Products (MK).

B. Continuous Geared Hinges: ANSI/BHMA A156.26 Grade 1-600 certified continuous geared hinge. with minimum 0.120-inch thick extruded 6060 T6 aluminum alloy hinge leaves and a minimum overall width of 4 inches. Hinges are non-handed, reversible and fabricated to template screw locations. Factory trim hinges to suit door height and prepare for electrical cutouts.

1. Acceptable Manufacturers:

a. Bommer Industries (BO).
b. McKinney Products (MK).
c. Pemko Manufacturing (PE).

C. Pin and Barrel Continuous Hinges: ANSI/BHMA A156.26 Grade 1-600 certified pin and barrel continuous hinges with minimum 14 gauge Type 304 stainless steel hinge leaves, concealed teflon coated stainless pin, and twin self lubricated nylon bearings at each knuckle separation. Factory trim hinges to suit door height and prepare for electrical cut-outs.

1. Acceptable Manufacturers:

a. Markar Products (MR).
b. McKinney Products (MK).
c. Pemko Manufacturing (PE).

2.3 POWER TRANSFER DEVICES

A. Electrified Quick Connect Transfer Hinges: Provide electrified transfer hinges with Molex™ standardized plug connectors and sufficient number of concealed wires (up to 12) to accommodate the electrified functions specified in the Door Hardware Sets. Connectors plug directly to through-door wiring harnesses for connection to electric locking devices and power supplies. Wire nut connections are not acceptable.

1. Acceptable Manufacturers:

a. Hager Companies (HA) - ETW-QC (# wires) Option.

NOT FOR BIDDING PURPOSES

b. McKinney Products (MK) - QC (# wires) Option.

B. Concealed Quick Connect Electric Power Transfers: Provide concealed wiring pathway housing mortised into the door and frame for low voltage electrified door hardware. Furnish with Molex™ standardized plug connectors and sufficient number of concealed wires (up to 12) to accommodate the electrified functions specified in the Door Hardware Sets. Connectors plug directly to through-door wiring harnesses for connection to electric locking devices and power supplies. Wire nut connections are not acceptable.

1. Acceptable Manufacturers:

a. Pemko Manufacturing (PE) – EL-CEPT Series.
b. Securitron (SU) - EL-CEPT Series.
c. Von Duprin (VD) - EPT-10 Series.

A. Electric Door Wire Harnesses: Provide electric/data transfer wiring harnesses with standardized plug connectors to accommodate up to twelve (12) wires. Connectors plug directly to through-door wiring harnesses for connection to electric locking devices and power supplies. Provide sufficient number and type of concealed wires to accommodate electric function of specified hardware. Provide a connector for through-door electronic locking devices and from hinge to junction box above the opening. Wire nut connections are not acceptable. Determine the length required for each electrified hardware component for the door type, size and construction, minimum of two per electrified opening.

1. Provide one each of the following tools as part of the base bid contract:

a. McKinney Products (MK) - Electrical Connecting Kit: QC-R001.
b. McKinney Products (MK) - Connector Hand Tool: QC-R003.

2. Acceptable Manufacturers:

a. McKinney Products (MK) – QC-C Series.

2.4 DOOR OPERATING TRIM

A. Flush Bolts and Surface Bolts: ANSI/BHMA A156.3 and A156.16, Grade 1, certified.

1. Flush bolts to be furnished with top rod of sufficient length to allow bolt retraction device location approximately six feet from the floor.
2. Furnish dust proof strikes for bottom bolts.
3. Surface bolts to be minimum 8” in length and U.L. listed for labeled fire doors and U.L. listed for windstorm components where applicable.
4. Provide related accessories (mounting brackets, strikes, coordinators, etc.) as required for appropriate installation and operation.
5. Acceptable Manufacturers:

a. Door Controls International (DC).
b. Rockwood Manufacturing (RO).
c. Trimco (TC).

B. Door Push Plates and Pulls: ANSI/BHMA A156.6 certified door pushes and pulls of type and design specified in the Hardware Sets. Coordinate and provide proper width and height as required where conflicting hardware dictates.

NOT FOR BIDDING PURPOSES

1. Push/Pull Plates: Minimum .050 inch thick, size as indicated in hardware sets, with beveled edges, secured with exposed screws unless otherwise indicated.
2. Door Pull and Push Bar Design: Size, shape, and material as indicated in the hardware sets. Minimum clearance of 2 1/2-inches from face of door unless otherwise indicated.
3. Offset Pull Design: Size, shape, and material as indicated in the hardware sets. Minimum clearance of 2 1/2-inches from face of door and offset of 90 degrees unless otherwise indicated.
4. Fasteners: Provide manufacturer's designated fastener type as indicated in Hardware Sets.
5. Acceptable Manufacturers:

   a. Hiawatha, Inc. (HI).
   b. Rockwood Manufacturing (RO).
   c. Trimco (TC).

2.5 CYLINDERS AND KEYING

A.General: Cylinder manufacturer to have minimum (10) years experience designing secured master key systems and have on record a published security keying system policy.

B. Source Limitations: Obtain each type of keyed cylinder and keys from the same source manufacturer as locksets and exit devices, unless otherwise indicated.

C. Cylinders: Original manufacturer cylinders complying with the following:

1. Mortise Type: Threaded cylinders with rings and cams to suit hardware application.
2. Rim Type: Cylinders with back plate, flat-type vertical or horizontal tailpiece, and raised trim ring.
3. Bored-Lock Type: Cylinders with tailpieces to suit locks.
4. Mortise and rim cylinder collars to be solid and recessed to allow the cylinder face to be flush and be free spinning with matching finishes.
5. Keyway: Match Facility Restricted Keyway.

D. Permanent Cores: Manufacturer's standard; finish face to match lockset; complying with the following:

1. Removable Cores: Core insert, removable by use of a special key, and for use with only the core manufacturer's cylinder and door hardware. Provide removable core (small or large format) as specified in Hardware Sets.

E. Security Cylinders: ANSI/BHMA A156.5, Grade 1, patterned security cylinders and keys able to be used together under the same facility master or grandmaster key system. Cylinders are to be factory keyed.

1. Acceptable Manufacturers:

   a. Corbin Russwin (RU) - Pyramid PS Series.
   b. No Substitution.

F. Keying System: Each type of lock and cylinders to be factory keyed.

1. Conduct specified "Keying Conference" to define and document keying system instructions and requirements.
2. Furnish factory cut, nickel-silver large bow permanently inscribed with a visual key control number as directed by Owner.
3. Existing System: Key locks to Owner's existing system.

G. Key Quantity: Provide the following minimum number of keys:

NOT FOR BIDDING PURPOSES

1. Change Keys per Cylinder: Two (3)
2. Master Keys: Ten (10) top master, Five (3) of each lower master.
3. Construction Keys (where required): Ten (10).
4. Construction Control Keys (where required): Two (2).

H. Construction Keying: Provide temporary keyed construction cores.

I. Key Registration List (Bitting List):

1. Provide keying transcript list to Owner's representative in the proper format for importing into key control software.
2. Provide transcript list in writing or electronic file as directed by the Owner.

A. Key Control Cabinet: Provide a key control system including envelopes, labels, and tags with self-locking key clips, receipt forms, 3-way visible card index, temporary markers, permanent markers, and standard metal cabinet. Key control cabinet shall have expansion capacity of 150% of the number of locks required for the project.

1. Acceptable Manufacturers:

a. Lund Equipment (LU).
b. MMF Industries (MM).
c. Telkee (TK).

K. Key Control Software: Provide one network version of "Key Wizard" branded key management software package that includes one year of technical support and upgrades to software at no charge. Provide factory key system formatted for importing into “Key Wizard” software.

2.6 MECHANICAL LOCKS AND LATCHING DEVICES

A. Mortise Locksets, Grade 1 (Heavy Duty): ANSI/BHMA A156.13, Series 1000, Operational Grade 1 certified. Locksets are to be manufactured with a corrosion resistant steel case and be field-reversible for handing without disassembly of the lock body.

1. Acceptable Manufacturers:

a. Corbin Russwin Hardware (RU) – ML2000 Series.
b. Sargent Manufacturing (SA) – 8200 Series.
c. Schlage (SC) – L9000 Series.

B. Cylindrical Locksets, Grade 1 (Heavy Duty): ANSI/BHMA A156.2, Series 4000, Grade 1 certified.

1. Furnish with solid cast levers, standard 2 3/4” backset, and 1/2" (3/4" at rated paired openings) throw brass or stainless steel latchbolt.
2. Locks are to be non-handed and fully field reversible.
3. Acceptable Manufacturers:
4. Corbin Russwin Hardware (RU) – CL3300 Series.
5. Sargent Manufacturing (SA) – 10 Line.
6. Schlage (SC) – ND Series.

2.7 INTEGRATED WIEGAND OUTPUT LOCKING DEVICES – MULTI-CLASS READER

A. Integrated Wiegand Output Multi-Class Mortise Locks: Wiegand output ANSI A156.13, Grade 1,

NOT FOR BIDDING PURPOSES

mortise lockset with integrated card reader, request-to-exit signaling, door position status switch, and latchbolt monitoring in one complete unit. Hard wired, solenoid driven locking/unlocking control of the lever handle trim, 3/4" deadlocking anti-friction latch, and 1" case-hardened steel deadbolt. Lock is U.L listed and labeled for use on up to 3 hour fire rated openings. Available with or without keyed high security cylinder override.

1. Open architecture, hard wired platform supports centralized control of locking units with new or existing Wiegand compatible access control systems. Latchbolt monitoring and door position switch act in conjunction to report door-in-frame (DPS) and door latched (door closed and latched) conditions.
2. Integrated reader supports the following credentials:

   a. 125kHz proximity credentials: HID, AWID, Indala, and EM4102.
   b. 13.56 MHz proximity credentials: HID iClass, HID iClass SE, SE for MIFARE Classic, DESFire EV1.

3. 12VDC external power supply required for reader and lock, with optional 24VDC lock solenoid. Fail safe or fail secure options.
4. Energy Efficient Design: Provide lock bodies which have a holding current draw of 15mA maximum, and can operate on either 12 or 24 volts. Locks are to be field configurable for fail safe or fail secure operation.
5. Installation requires only one cable run from the lock to the access control panel without requirements for additional proprietary lock panel interface boards or modules.
6. Installation to include manufacturer's access control panel interface board or module where required for Wiegand output protocol.
7. Acceptable Manufacturers:

   a. Corbin Russwin (RU) – ML2000 SE-LP10 Series.
   b. Sargent Manufacturing (SA) – M1 8200 Series.

2.8 AUXILIARY LOCKS

A. Mortise Deadlocks, Small Case: ANSI/BHMA A156.36, Grade 1, small case mortise type deadlocks constructed of heavy gauge wrought corrosion resistant steel. Steel or stainless steel bolts with a 1" throw and hardened steel roller pins. Deadlocks to be products of the same source manufacturer and keyway as other specified locksets.

   1. Acceptable Manufacturers:

      a. Corbin Russwin Hardware (RU) - DL4100 Series.
      b. Sargent Manufacturing (SA) - 4870 Series.
      c. Schlage (SC) - L460 Series.

2.9 LOCK AND LATCH STRIKES

A. Strikes: Provide manufacturer's standard strike with strike box for each latch or lock bolt, with curved lip extended to protect frame, finished to match door hardware set, unless otherwise indicated, and as follows:

   1. Flat-Lip Strikes: For locks with three-piece antifriction latchbolts, as recommended by manufacturer.
   2. Extra-Long-Lip Strikes: For locks used on frames with applied wood casing trim.
   3. Aluminum-Frame Strike Box: Provide manufacturer's special strike box fabricated for aluminum framing.

NOT FOR BIDDING PURPOSES

4. Double-lipped strikes: For locks at double acting doors. Furnish with retractable stop for rescue hardware applications.

B. Standards: Comply with the following:

1. Strikes for Mortise Locks and Latches: BHMA A156.13.
2. Strikes for Bored Locks and Latches: BHMA A156.2.
3. Strikes for Auxiliary Deadlocks: BHMA A156.36.
4. Dustproof Strikes: BHMA A156.16.

2.10 CONVENTIONAL EXIT DEVICES

A. General Requirements: All exit devices specified herein shall meet or exceed the following criteria:

1. At doors not requiring a fire rating, provide devices complying with NFPA 101 and listed and labeled for "Panic Hardware" according to UL305. Provide proper fasteners as required by manufacturer including sex nuts and bolts at openings specified in the Hardware Sets.
2. Where exit devices are required on fire rated doors, provide devices complying with NFPA 80 and with UL labeling indicating "Fire Exit Hardware". Provide devices with the proper fasteners for installation as tested and listed by UL. Consult manufacturer’s catalog and template book for specific requirements.
3. Except on fire rated doors, provide exit devices with hex key dogging device to hold the pushbar and latch in a retracted position. Provide optional keyed cylinder dogging on devices where specified in Hardware Sets.
4. Devices must fit flat against the door face with no gap that permits unauthorized dogging of the push bar. The addition of filler strips is required in any case where the door light extends behind the device as in a full glass configuration.
5. Electromechanical Options: Subject to same compliance standards and requirements as mechanical exit devices, electrified devices to be of type and design as specified in hardware sets. Include any specific controllers when conventional power supplies are not sufficient to provide the proper inrush current.
6. Motorized Electric Latch Retraction: Devices with an electric latch retraction feature must use motors which have a maximum current draw of 600mA. Solenoid driven latch retraction is not acceptable.
7. Lever Operating Trim: Where exit devices require lever trim, furnish manufacturer's heavy duty escutcheon trim with threaded studs for thru-bolts.

   a. Lock Trim Design: As indicated in Hardware Sets, provide finishes and designs to match that of the specified locksets.
   b. Where function of exit device requires a cylinder, provide a cylinder (Rim or Mortise) as specified in Hardware Sets.

8. Vertical Rod Exit Devices: Where surface or concealed vertical rod exit devices are used at interior openings, provide as less bottom rod (LBR) unless otherwise indicated. Provide dust proof strikes where thermal pins are required to project into the floor.
9. Narrow Stile Applications: At doors constructed with narrow stiles, or as specified in Hardware Sets, provide devices designed for maximum 2” wide stiles.
10. Rail Sizing: Provide exit device rails factory sized for proper door width application.
11. Through Bolt Installation: For exit devices and trim as indicated in Door Hardware Sets.

B. Conventional Push Rail Exit Devices (Heavy Duty): ANSI/BHMA A156.3, Grade 1 certified panic and fire exit hardware devices furnished in the functions specified in the Hardware Sets. Exit device latch to be stainless steel, pullman type, with deadlock feature.

1. Acceptable Manufacturers:

   a. Corbin Russwin Hardware (RU) - ED4000 / ED5000 Series.

NOT FOR BIDDING PURPOSES

b. Sargent Manufacturing (SA) - 80 Series.
c. Von Duprin (VD) - 35A/98 XP Series.

2.11 INTEGRATED WIEGAND OUTPUT EXIT DEVICES – MULTI-CLASS READER

A. Integrated Wiegand Output Multi-Class Exit Hardware: Wiegand output ANSI 156.3 Grade 1 rim, mortise, and vertical rod exit device hardware with integrated proximity card reader, latchbolt and touchbar monitoring, and request-to-exit signaling, in one complete unit. Hard wired, solenoid driven locking/unlocking control of the lever handle exit trim with 3/4" throw latch bolt. U.L listed and labeled for either panic or "fire exit hardware" for use on up to 3 hour fire rated openings. Available with or without keyed high security cylinder override.

1. Open architecture, hard wired platform supports centralized control of locking units with new or existing Wiegand compatible access control systems. Inside push bar (request-toexit) signaling and door position (open/closed status) monitoring (via separately connected DPS).
2. Integrated reader supports the following credentials:

   a. 125kHz proximity credentials: HID, AWID, Indala, and EM4102.
   b. 13.56 MHz proximity credentials: HID iClass, HID iClass SE, SE for MIFARE Classic, DESFire EV1.

3. 12VDC external power supply required for reader. 24VDC required for solenoid operated exit trim. Fail safe or fail secure options.
4. Installation requires only one cable run from the exit hardware to the access control panel without requirements for additional proprietary lock panel interface boards or modules.
5. Competitor Alternates Allowed Option>Installation to include manufacturer's access control panel interface board or module where required for Wiegand output protocol.
6. Acceptable Manufacturers:

   a. Corbin Russwin (RU) – ED5000 SE-LP10 Series.
   b. Sargent Manufacturing (SA) – M1 80 Series.

C. Tube Steel Removable Mullions: ANSI/BHMA A156.3 removable steel mullions with malleable-iron top and bottom retainers and a primed paint finish.

1. Provide keyed removable feature where specified in the Hardware Sets.
2. Provide stabilizers and mounting brackets as required.
3. Provide electrical quick connection wiring options as specified in the hardware sets.
4. Acceptable Manufacturers:

   a. Corbin Russwin Hardware (RU) - 700/900 Series.
   b. Sargent Manufacturing (SA) - 980S Series.
   c. Von Duprin (VD) - 9954 Series.

2.12 DOOR CLOSERS

A. All door closers specified herein shall meet or exceed the following criteria:

1. General: Door closers to be from one manufacturer, matching in design and style, with the same type door preparations and templates regardless of application or spring size. Closers to be non-handed with full sized covers including installation and adjusting information on inside of cover.
2. Standards: Closers to comply with UL-10C for Positive Pressure Fire Test and be U.L. listed for use of fire rated doors.
3. Cycle Testing: Provide closers which have surpassed 15 million cycles in a test witnessed and

NOT FOR BIDDING PURPOSES

verified by UL.

4. Size of Units: Comply with manufacturer's written recommendations for sizing of door closers depending on size of door, exposure to weather, and anticipated frequency of use. Where closers are indicated for doors required to be accessible to the physically handicapped, provide units complying with ANSI ICC/A117.1.
5. Closer Arms: Provide heavy duty, forged steel closer arms unless otherwise indicated in Hardware Sets.
6. Closers shall not be installed on exterior or corridor side of doors; where possible install closers on door for optimum aesthetics.
7. Closer Accessories: Provide door closer accessories including custom templates, special mounting brackets, spacers and drop plates as required for proper installation. Provide through-bolt and security type fasteners as specified in the hardware sets.

B. Door Closers, Surface Mounted (Heavy Duty): ANSI/BHMA A156.4, Grade 1 surface mounted, heavy duty door closers with complete spring power adjustment, sizes 1 thru 6; and fully operational adjustable according to door size, frequency of use, and opening force. Closers to be rack and pinion type, one piece cast iron or aluminum alloy body construction, with adjustable backcheck and separate non-critical valves for closing sweep and latch speed control. Provide non-handed units standard.

1. Acceptable Manufacturers:

a. Corbin Russwin Hardware (RU) – DC6000 Series.
b. Sargent Manufacturing (SA) - 351 Series.
c. Norton Door Controls (NO) - 7500 Series.

2.13 ARCHITECTURAL TRIM

A. Door Protective Trim

1. General: Door protective trim units to be of type and design as specified below or in the Hardware Sets.
2. Size: Fabricate protection plates (kick, armor, or mop) not more than 2" less than door width (LDW) on stop side of single doors and 1” LDW on stop side of pairs of doors, and not more than 1" less than door width on pull side. Coordinate and provide proper width and height as required where conflicting hardware dictates. Height to be as specified in the Hardware Sets.
3. Where plates are applied to fire rated doors with the top of the plate more than 16” above the bottom of the door, provide plates complying with NFPA 80. Consult manufacturer’s catalog and template book for specific requirements for size and applications.
4. Protection Plates: ANSI/BHMA A156.6 certified protection plates (kick, armor, or mop), fabricated from the following:

a. Stainless Steel: 300 grade, 050-inch thick.

5. Options and fasteners: Provide manufacturer's designated fastener type as specified in the Hardware Sets. Provide countersunk screw holes.
6. Acceptable Manufacturers:

a. Hiawatha, Inc. (HI).
b. Rockwood Manufacturing (RO).
c. Trimco (TC).

2.14 DOOR STOPS AND HOLDERS

A. General: Door stops and holders to be of type and design as specified below or in the Hardware Sets.

NOT FOR BIDDING PURPOSES

B. Door Stops and Bumpers: ANSI/BHMA A156.16, Grade 1 certified door stops and wall bumpers. Provide wall bumpers, either convex or concave types with anchorage as indicated, unless floor or other types of door stops are specified in Hardware Sets. Do not mount floor stops where they will impede traffic. Where floor or wall bumpers are not appropriate, provide overhead type stops and holders.

1. Acceptable Manufacturers:

a. Hiawatha, Inc. (HI).
b. Rockwood Manufacturing (RO).
c. Trimco (TC).

C. Overhead Door Stops and Holders: ANSI/BHMA A156.6, Grade 1 certified overhead stops and holders to be surface or concealed types as indicated in Hardware Sets. Track, slide, arm and jamb bracket to be constructed of extruded bronze and shock absorber spring of heavy tempered steel. Provide non-handed design with mounting brackets as required for proper operation and function.

1. Acceptable Manufacturers:

a. Rixson Door Controls (RF).
b. Rockwood Manufacturing (RO).
c. Sargent Manufacturing (SA).

2.15 ARCHITECTURAL SEALS

A. General: Thresholds, weatherstripping, and gasket seals to be of type and design as specified below or in the Hardware Sets. Provide continuous weatherstrip gasketing on exterior doors and provide smoke, light, or sound gasketing on interior doors where indicated. At exterior applications provide non-corrosive fasteners and elsewhere where indicated.

B. Smoke Labeled Gasketing: Assemblies complying with NFPA 105 that are listed and labeled by a testing and inspecting agency acceptable to authorities having jurisdiction, for smoke control ratings indicated, based on testing according to UL 1784.

1. Provide smoke labeled perimeter gasketing at all smoke labeled openings.

C. Fire Labeled Gasketing: Assemblies complying with NFPA 80 that are listed and labeled by a testing and inspecting agency acceptable to authorities having jurisdiction, for fire ratings indicated, based on testing according to UL-10C.

1. Provide intumescent seals as indicated to meet UL10C Standard for Positive Pressure Fire Tests of Door Assemblies, and NPFA 252, Standard Methods of Fire Tests of Door Assemblies.

D. Sound-Rated Gasketing: Assemblies that are listed and labeled by a testing and inspecting agency, for sound ratings indicated.

E. Replaceable Seal Strips: Provide only those units where resilient or flexible seal strips are easily replaceable and readily available from stocks maintained by manufacturer.

D. Acceptable Manufacturers:

1. National Guard Products (NG).
2. Pemko Manufacturing (PE).
3. Reese Enterprises, Inc. (RE).

NOT FOR BIDDING PURPOSES

2.16 ELECTRONIC ACCESSORIES

A. Power Supplies: Provide Nationally Recognized Testing Laboratory Listed 12VDC or 24VDC (field selectable) filtered and regulated power supplies. Include battery backup option with integral battery charging capability in addition to operating the DC load in event of line voltage failure. Provide the least number of units, at the appropriate amperage level, sufficient to exceed the required total draw for the specified electrified hardware and access control equipment.

1. Acceptable Manufacturers:

a. Corbin Russwin Hardware (RU) – 782.
b. Sargent Manufacturing (SA) – 3500 Series.
c. Securitron (SU) - BPS Series.
d. Von Duprin (VD) - PS.

2.17 FABRICATION

A. Fasteners: Provide door hardware manufactured to comply with published templates generally prepared for machine, wood, and sheet metal screws. Provide screws according to manufacturers recognized installation standards for application intended.

2.18 FINISHES

A. Standard: Designations used in the Hardware Sets and elsewhere indicate hardware finishes complying with ANSI/BHMA A156.18, including coordination with traditional U.S. finishes indicated by certain manufacturers for their products.

B. Provide quality of finish, including thickness of plating or coating (if any), composition, hardness, and other qualities complying with manufacturer's standards, but in no case less than specified by referenced standards for the applicable units of hardware

C. Protect mechanical finishes on exposed surfaces from damage by applying a strippable, temporary protective covering before shipping.

PART 3 - EXECUTION

3.1 EXAMINATION

A. Examine scheduled openings, with Installer present, for compliance with requirements for installation tolerances, labeled fire door assembly construction, wall and floor construction, and other conditions affecting performance.

B. Notify architect of any discrepancies or conflicts between the door schedule, door types, drawings and scheduled hardware. Proceed only after such discrepancies or conflicts have been resolved in writing.

3.2 PREPARATION

A. Hollow Metal Doors and Frames: Comply with ANSI/DHI A115 series.

C. Wood Doors: Comply with ANSI/DHI A115-W series.

3.3 INSTALLATION

NOT FOR BIDDING PURPOSES

A. Install each item of mechanical and electromechanical hardware and access control equipment to comply with manufacturer's written instructions and according to specifications.

1. Installers are to be trained and certified by the manufacturer on the proper installation and adjustment of fire, life safety, and security products including: hanging devices; locking devices; closing devices; and seals.

B. Mounting Heights: Mount door hardware units at heights indicated in following applicable publications, unless specifically indicated or required to comply with governing regulations:

1. Standard Steel Doors and Frames: DHI's "Recommended Locations for Architectural Hardware for Standard Steel Doors and Frames."
2. Wood Doors: DHI WDHS.3, "Recommended Locations for Architectural Hardware for Wood Flush Doors."
3. Where indicated to comply with accessibility requirements, comply with ANSI A117.1 "Accessibility Guidelines for Buildings and Facilities."
4. Provide blocking in drywall partitions where wall stops or other wall mounted hardware is located.

C. Integrated Wiegand access control products are required to be installed through current members of the ASSA ABLOY "Certified Integrator" (CI) program.

D. Retrofitting: Install door hardware to comply with manufacturer's published templates and written instructions. Where cutting and fitting are required to install door hardware onto or into surfaces that are later to be painted or finished in another way, coordinate removal, storage, and reinstallation of surface protective trim units with finishing work specified in Division 9 Sections. Do not install surface-mounted items until finishes have been completed on substrates involved.

E. Thresholds: Set thresholds for exterior and acoustical doors in full bed of sealant complying with requirements specified in Division 7 Section "Joint Sealants."

F. Storage: Provide a secure lock up for hardware delivered to the project but not yet installed. Control the handling and installation of hardware items so that the completion of the work will not be delayed by hardware losses before and after installation.

3.4 FIELD QUALITY CONTROL

A. Field Inspection: Supplier will perform a final inspection of installed door hardware and state in report whether work complies with or deviates from requirements, including whether door hardware is properly installed, operating and adjusted.

3.5 ADJUSTING

A. Initial Adjustment: Adjust and check each operating item of door hardware and each door to ensure proper operation or function of every unit. Replace units that cannot be adjusted to operate as intended. Adjust door control devices to compensate for final operation of heating and ventilating equipment and to comply with referenced accessibility requirements.

3.6 CLEANING AND PROTECTION

A. Protect all hardware stored on construction site in a covered and dry place. Protect exposed hardware installed on doors during the construction phase. Install any and all hardware at the latest possible time frame.

NOT FOR BIDDING PURPOSES

B. Clean adjacent surfaces soiled by door hardware installation.

C. Clean operating items as necessary to restore proper finish. Provide final protection and maintain conditions that ensure door hardware is without damage or deterioration at time of owner occupancy.

3.7 DEMONSTRATION

A. Instruct Owner's maintenance personnel to adjust, operate, and maintain mechanical and electromechanical door hardware.

3.8 DOOR HARDWARE SETS

A. The hardware sets represent the design intent and direction of the owner and architect. They are a guideline only and should not be considered a detailed hardware schedule. Discrepancies, conflicting hardware and missing items should be brought to the attention of the architect with corrections made prior to the bidding process. Omitted items not included in a hardware set should be scheduled with the appropriate additional hardware required for proper application and functionality.

B. Manufacturer’s Abbreviations:

1. MK - McKinney
2. PE - Pemko
3. MR - Markar
4. RO - Rockwood
5. SA - Sargent
6. RU - Corbin Russwin
7. SU - Securitron
8. RF - Rixson
9. NO - Norton

Hardware Sets

Set: 1.0

Doors: B128A, C119A, C123B, C123C, EXC004, EXC011

0 All Hardware BY DOOR SUPPLIER OT

Set: 2.0

Doors: EXB102, EXC002

2 Continuous Hinge CFM__SLF-HD1 PT - DOOR HEIGHT PE 1 Removable Mullion L980A US28 SA 2 Rim Exit Device LC 16 55 56 8810 862 US32D SA 3 Cylinder (mortise) 1080 CT6R - LENGTH/CAM TO SUIT 630 RU 3 Removable Core 8020 630 RU 2 Conc Overhead Stop 6-X36 630 RF

NOT FOR BIDDING PURPOSES

2	Door Closer	J7500	689 NC
1	Threshold	272A MSES25SS	PE
1	Rain Guard	346C	PE
1	Gasketing (mullion)	5110BL	PE
2	Sweep (w/drip edge)	3452CNB	PE
2	Frame Harness	QC-C1500P	MK
2	Door Harness	QC-C___ - LENGTH TO SUIT	MK
2	Switch	3287	SA
2	Electric Power Transfer	EL-CEPT	SU
1	Power Supply	3540	SA

Notes:

1	Threshold	279x224AFGT MSES25SS	PE

Perimeter/meeting stile seals by frame/door supplier. Electronic Operation: Valid card at adjacent door retracts latchbolt. Free egress at all times. In case of power loss, door remains locked and latched.

Set: 3.0
Doors: EXA103, EXB101, EXB103, EXC001

2 Continuous Hinge CFM__SLF-HD1 PT - DOOR HEIGHT PE 1 Removable Mullion L980A US28 SA 1 Rim Exit Device LC 16 55 56 8810 862 US32D SA 1 Access Control Rim Exit LC 16 56 M1-8804 862 US32D SA 1 Cylinder (rim) 3080 CT6R 630 RU 3 Cylinder (mortise) 1080 CT6R - LENGTH/CAM TO SUIT 630 RU 4 Removable Core 8020 630 RU 2 Conc Overhead Stop 6-X36 630 RF 2 Door Closer J7500 689 NO 1 Threshold 272A MSES25SS PE 1 Rain Guard 346C PE 1 Gasketing (mullion) 5110BL PE 2 Sweep (w/drip edge) 3452CNB PE 2 Frame Harness QC-C1500P MK 3 Door Harness QC-C___ - LENGTH TO SUIT MK 1 Switch 3287 SA 2 Electric Power Transfer EL-CEPT SU 1 Power Supply 3540 SA

Notes: Perimeter/meeting stile seals by frame/door supplier. Electronic Operation: Valid card (and intercom signal at EXB101, EXC001) or key retracts latchbolt. Free egress at all times. In case of power loss, door remains locked and latched.

Set: 4.0
Doors: EXC009

2 Continuous Hinge CFM__SLF-HD1 PT - DOOR HEIGHT PE 1 Removable Mullion L980A US28 SA 1 Rim Exit Device LC 16 55 56 8810 862 US32D SA 1 Access Control Rim Exit LC 16 56 M1-8804 862 US32D SA 1 Cylinder (rim) 3080 CT6R 630 RU 3 Cylinder (mortise) 1080 CT6R - LENGTH/CAM TO SUIT 630 RU 4 Removable Core 8020 630 RU 2 Door Closer CPS7500 689 NO

NOT FOR BIDDING PURPOSES

2	Door Closer	J7500	689 NO
1	Threshold	272A MSES25SS	PE
1	Rain Guard	346C	PE
1	Gasketing (mullion)	5110BL	PE
2	Sweep (w/drip edge)	3452CNB	PE
2	Frame Harness	QC-C1500P	MK
2	Door Harness	QC-C___ - LENGTH TO SUIT	MK
2			

Perimeter/meeting stile seals by frame/door supplier. Electronic Operation: Valid card or key retracts latchbolt. Free egress at all times. In case of power loss, door remains locked and latched.

Set: 5.0

Doors: EXA104

2 Continuous Hinge CFM__SLF-HD1 - DOOR HEIGHT PE 1 Removable Mullion L980A US28 SA 2 Rim Exit Device LD 8810 US32D SA 2 Conc Overhead Stop 6-X36 630 RF 2 Door Closer J7500 689 NO 1 Threshold 272A MSES25SS PE 1 Rain Guard 346C PE 2 Sweep (w/drip edge) 3452CNB PE 2 Switch 3287 SA

Notes: Perimeter/meeting stile seals by frame/door supplier.

Set: 6.0

Doors: EXC003, EXC012

2 Continuous Hinge CFM__SLF-HD1 - DOOR HEIGHT PE 1 Removable Mullion L980A US28 SA 2 Rim Exit Device LD 8810 US32D SA 2 Door Closer CPS7500 689 NO 1 Threshold 272A MSES25SS PE 1 Rain Guard 346C PE 2 Sweep (w/drip edge) 3452CNB PE 2 Switch 3287 SA

Notes: Perimeter/meeting stile seals by frame/door supplier.

Set: 7.0

Doors: EXA101, EXA102

1 Continuous Hinge CFM__SLF-HD1 PT - DOOR HEIGHT PE ML20608 x SELP10-SEC NSA R0_ PHRR0_

1 Access Control Mort Lock 626 RU

CT6R 1 Removable Core 8020 630 RU 1 Door Closer CPS7500

689 NO

NOT FOR BIDDING PURPOSES

2	Door Closer	J7500	689	NO
1	Threshold	272A MSES25SS		PE
1	Rain Guard	346C		PE
1	Gasketing (mullion)	5110BL		PE
2	Sweep (w/drip edge)	3452CNB		PE

1 Kick Plate K1050 10" HVBEV US32D RO 1 Threshold 279x224AFGT MSES25SS PE 1 Rain Guard 346C PE 1 Sweep (w/drip edge) 3452CNB PE 1 Frame Harness QC-C1500P MK 1 Door Harness QC-C___ - LENGTH TO SUIT MK 1 Electric Power Transfer EL-CEPT SU 1 Power Supply BPS-24-1 RU

Notes: Perimeter/meeting stile seals by frame/door supplier. Electronic Operation: Valid card unlocks outside lever, unless deadbolt is projected, or key retracts latchbolt. Free egress at all times. In case of power loss, door remains locked and latched.

Set: 8.0

Doors: EXC005, EXC006

1 Continuous Hinge CFM__SLF-HD1 PT - DOOR HEIGHT PE 1 Access Control Mort Lock ML20606 x SELP10-SEC NSA R0_ CT6R 626 RU 1 Removable Core 8020 630 RU 1 Door Closer CPS7500 689 NO 1 Kick Plate K1050 10" HVBEV US32D RO 1 Threshold 279x224AFGT MSES25SS PE 1 Rain Guard 346C PE 1 Sweep (w/drip edge) 3452CNB PE 1 Frame Harness QC-C1500P MK 1 Door Harness QC-C___ - LENGTH TO SUIT MK 1 Electric Power Transfer EL-CEPT SU 1 Power Supply BPS-24-1 RU

Notes: Perimeter/meeting stile seals by frame/door supplier. Electronic Operation: Valid card (and intercom signal EXC006) unlocks outside lever or key retracts latchbolt. Free egress at all times. In case of power loss, door remains locked and latched.

Set: 9.0

Doors: EXC007, EXC008

2 Continuous Hinge CFM__SLF-HD1 - DOOR HEIGHT PE 1 Dust Proof Strike 570 US26D RO 2 Flush Bolt (manual) 555 (or) 557 US26D RO 1 Storeroom Lock ML2057 NSA CT6R 626 RU 1 Removable Core 8020 630 RU 2 Door Closer CPS7500 689 NO 1 Threshold 279x224AFGT MSES25SS PE 1 Rain Guard 346C PE 2 Sweep (w/drip edge) 3452CNB PE 2 Switch 3287 SA

Notes: Perimeter/meeting stile seals by frame/door supplier.

Set: 10.0

Doors: EXC010

Notes: Perimeter/meeting stile seals by frame/door supplier.

Set: 11.0

Doors: B120A

2 Electric Hinge (heavy weight) T4A3786-QC12 US26D MK 4 Hinge (heavy weight) T4A3786 US26D MK 1 Removable Mullion L980S PC SA 1 Rim Exit Device LC 16 55 8810 ETL US32D SA 1 Access Control Rim Exit LC 16 M1-8876-24V-IPS ETL US32D SA 1 Cylinder (rim) 3080 CT6R 630 RU 3 Cylinder (mortise) 1080 CT6R - LENGTH/CAM TO SUIT 630 RU 4 Removable Core 8020 630 RU 2 Door Closer CLP7500 689 NO 2 Kick Plate K1050 10" HVBEV US32D RO 1 Gasketing (head/jamb) S88BL PE 1 Gasketing (mullion) 5110BL PE 2 Frame Harness QC-C1500P MK 2 Door Harness QC-C___ - LENGTH TO SUIT MK 1 Switch 3287 SA 1

NOT FOR BIDDING PURPOSES

Power Supply 3520 SA

Notes: Electronic Operation: Valid card unlocks outside lever or key retracts latchbolt. Free egress at all times. In case of power loss, door remains locked and latched.

Set: 12.0

Doors: B120B

6 Electric Hinge (heavy weight) T4A3786-QC12 US26D MK 6 Hinge (heavy weight) T4A3786 US26D MK 1 Removable Mullion L980S PC SA 2 Rim Exit Device LC 16 55 8810 ETL US32D SA 2 Cylinder (mortise) 1080 CT6R - LENGTH/CAM TO SUIT 630 RU 2 Removable Core 8020 630 RU 2 Door Closer CLP7500 689 NO 2 Kick Plate K1050 10" HVBEV US32D RO 1 Gasketing (head/jamb) S773BL PE 1 Gasketing (mullion) 5110BL PE 1 Frame Harness QC-C1500P MK 1 Door Harness QC-C___ - LENGTH TO SUIT MK 1 Switch 3287 SA

NOT FOR BIDDING PURPOSES

Set: 13.0

Doors: A101, A102, A114, A115, A117, A118, A128, A129, A133, A134, A201, A202, A209, A210, A214,

2	Door Closer	J7500	689	NO
1	Threshold	272A MSES25SS		PE
1	Rain Guard	346C		PE
1	Gasketing (mullion)	5110BL		PE
2	Sweep (w/drip edge)	3452CNB		PE
2	Frame Harness	QC-C1500P		MK
2	Door Harness	QC-C___ - LENGTH TO SUIT		MK
2	Switch	3287		SA
2	Electric Power Transfer	EL-CEPT		SU
1	Power Supply	3540		SA

Notes:

1	Threshold	279x224AFGT MSES25SS		PE
1	Rain Guard	346C		PE
1	Gasketing (mullion)	5110BL		PE
2	Sweep (w/drip edge)	3452CNB		PE
3	Frame Harness	QC-C1500P		MK
2	Door Harness	QC-C___ - LENGTH TO SUIT		MK
1	Switch	3287		SA
2	Electric Power Transfer	EL-CEPT		SU
1	Power Supply	3540		SA

Notes:

1	Continuous Hinge	CFM__SLF-HD1 - DOOR HEIGHT		PE
1	Storeroom Lock	ML2057 NSA CT6R	626	RU
1	Removable Core	8020	630	RU

A215, A217, A218, A228, A229, A233, A234, B208, B209, B216, B217, B219, B220

Notes: Coordinate electromagnetic holder to be located on frame mullion with door at 180-degrees. Electromagnetic holders connected to remote release device (by security) for a lockdown event.

Set: 15.0

Doors: A-S1A, A-S1B, A-S2A, A-S2B, B-S1A

NOT FOR BIDDING PURPOSES

6 Hinge (heavy weight) T4A3786 US26D MK 1 Removable Mullion 12-L980 PC SA 2 Rim Exit Device 12 8815 ETL US32D SA 2 Door Closer PR7500 689 NO 2 Kick Plate K1050 10" HVBEV US32D RO 2 Electromagnetic Holder 998 24VDC 689 RF

DOOR HARDWARE 087100 - 20

1 Gasketing (head/jamb) S88BL PE 1 Gasketing (mullion) 5110BL PE 2 Astragal (split) 297AS PE
Notes: Connect holder to fire alarm system to release upon fire alarm.

Set: 16.0

Doors: B121A, C115A, C115B, C116A, C116B

NOT FOR BIDDING PURPOSES

Notes: Connect holder to fire alarm system to release upon fire alarm. Electromagnetic holders also connected to remote release device (by security) for a lockdown event.

2	Door Closer	J7500	689	NO
1	Threshold	272A MSES25SS		PE
1	Rain Guard	346C		PE
1	Gasketing (mullion)	5110BL		PE
2	Sweep (w/drip edge)	3452CNB		PE
2	Frame Harness	QC-C1500P		MK
2	Door Harness	QC-C___ - LENGTH TO SUIT		MK
2	Switch	3287		SA
2	Electric Power Transfer	EL-CEPT		SU
1	Power Supply	3540		SA

Notes:

1	Threshold	279x224AFGT MSES25SS		PE
1	Rain Guard	346C		PE
1	Gasketing (mullion)	5110BL		PE
2	Sweep (w/drip edge)	3452CNB		PE
3	Frame Harness	QC-C1500P		MK
2	Door Harness	QC-C___ - LENGTH TO SUIT		MK
1	Switch	3287		SA
2	Electric Power Transfer	EL-CEPT		SU
1	Power Supply	3540		SA

Notes:

1	Continuous Hinge	CFM__SLF-HD1 - DOOR HEIGHT		PE
1	Storeroom Lock	ML2057 NSA CT6R	626	RU
1	Removable Core	8020	630	RU
1	Door Closer	CPS7500	689	NO
1	Threshold	279x224AFGT MSES25SS		PE
1	Rain Guard	346C		PE
1	Sweep (w/drip edge)	3452CNB		PE

NOT FOR BIDDING PURPOSES

Set: 19.0

Doors: A126, A226, B115A, B125

2	Door Closer	J7500	689	NO
2	Door Closer	J7500	689	NO
1	Threshold	272A MSES25SS		PE
1	Threshold	272A MSES25SS		PE
1	Rain Guard	346C		PE
1	Rain Guard	346C		PE
1	Gasketing (mullion)	5110BL		PE
1	Gasketing (mullion)	5110BL		PE
2	Sweep (w/drip edge)	3452CNB		PE
2	Sweep (w/drip edge)	3452CNB		PE
2	Frame Harness	QC-C1500P		MK
2	Door Harness	QC-C___ - LENGTH TO SUIT		MK
2				

Notes: Electronic Operation: Valid card (and intercom signal at B115A)l unlocks outside lever or key retracts latchbolt. Free egress at all times. In case of power loss, door remains locked and latched.

Set: 20.0

Doors: C136

6 Hinge TA2714 US26D MK 1 Dust Proof Strike 570 US26D RO 2 Flush Bolt (manual) 555 (or) 557 US26D RO 1 Storeroom Lock CL3357 NZD CT6R 626 RU 1 Removable Core 8020 630 RU 1 Door Closer R7500 (or) PR7500 689 NO 2 Kick Plate K1050 10" HVBEV US32D RO 2 Door Stop 403 (or) 441CU US26D RO 2 Silencer 608 (or) 609 GRY RO

Set: 21.0

Doors: B215.1, C104

6 Hinge TA2714 US26D MK 1 Dust Proof Strike 570 US26D RO 2 Flush Bolt (manual) 555 (or) 557 US26D RO 1 Storeroom Lock CL3357 NZD CT6R 626 RU 1 Removable Core 8020 630 RU 1 Surf Overhead Stop 10-X36 652 RF 1 Door Closer CLP7500 689 NO 2 Kick Plate K1050 10" HVBEV US32D RO 2 Silencer 608 (or) 609 GRY RO

Set: 22.0

Doors: B102, B119

3 Hinge TA2714 US26D MK 1 Storeroom Lock CL3357 NZD CT6R 626 RU 1 Removable Core 8020 630 RU DOOR HARDWARE 087100 - 22 1 Door Stop 403 (or) 441CU US26D RO 3 Silencer 608 (or) 609 GRY RO

Set: 23.0

Doors: A112, A119, A120, A120.1, A131, A132, A137, A212, A219, A222.1, A231, A232, A235, B123, B213

Notes:

Set: 24.0

Doors: C103

3 Hinge TA2714 US26D MK 1 Storeroom Lock CL3357 NZD CT6R 626 RU 1 Removable Core 8020 630 RU 1

NOT FOR BIDDING PURPOSES

Door Closer CLP7500 689 NO 1 Kick Plate K1050 10" HVBEV US32D RO 3 Silencer 608 (or) 609 GRY RO

Set: 25.0

Doors: B105, B108, B111, B112, B114, B122, B206, C129

3 Hinge TA2714 US26D MK 1 Office Lock CL3351 NZD CT6D 626 RU 1 Removable Core 8020 630 RU 1 Door Stop 403 (or) 441CU US26D RO 3 Silencer 608 (or) 609 GRY RO

Set: 26.0

Doors: C112, C125

3 Hinge TA2714 US26D MK 1 Office Lock CL3351 NZD CT6D 626 RU 1 Removable Core 8020 630 RU 1 Door Closer R7500 (or) PR7500 689 NO 1 Kick Plate K1050 10" HVBEV US32D RO 1 Door Stop 403 (or) 441CU US26D RO 1 Gasketing (head/jamb) S773BL PE

Set: 27.0

NOT FOR BIDDING PURPOSES

2	Door Closer	J7500	689	NO
1	Threshold	272A MSES25SS		PE
1	Rain Guard	346C		PE
1	Gasketing (mullion)	5110BL		PE
2	Sweep (w/drip edge)	3452CNB		PE

3 Silencer 608 (or) 609 GRY RO Notes:

NOT FOR BIDDING PURPOSES

2	Door Closer	J7500	689	NO
1	Threshold	272A MSES25SS		PE
1	Rain Guard	346C		PE
1	Gasketing (mullion)	5110BL		PE
2	Sweep (w/drip edge)	3452CNB		PE
2	Frame Harness	QC-C1500P		MK
2	Door Harness	QC-C___ - LENGTH TO SUIT		MK
2	Switch	3287		SA
2	Electric Power Transfer	EL-CEPT		SU
1	Power Supply	3540		SA

Notes:

1	Threshold	279x224AFGT MSES25SS		PE
1	Rain Guard	346C		PE
1	Gasketing (mullion)	5110BL		PE
2	Sweep (w/drip edge)	3452CNB		PE
3	Frame Harness	QC-C1500P		MK
2	Door Harness	QC-C___ - LENGTH TO SUIT		MK
1	Switch	3287		SA
2	Electric Power Transfer	EL-CEPT		SU
1	Power Supply	3540		SA

Notes:

1	Continuous Hinge	CFM__SLF-HD1 - DOOR HEIGHT		PE
1	Storeroom Lock	ML2057 NSA CT6R	626	RU
1	Removable Core	8020	630	RU
1	Door Closer	CPS7500	689	NO
1	Threshold	279x224AFGT MSES25SS		PE
1	Rain Guard	346C		PE
1	Sweep (w/drip edge)	3452CNB		PE
1	Switch	3287		SA
3	Hinge	TA2714	US26D	MK
1	Rim Exit Device	LC LD 8804 ETL	US32D	SA
1	Cylinder (rim)	3080 CT6R	630	RU
1	Door Closer	R7500H (or) PR7500H	689	NO

NOT FOR BIDDING PURPOSES

2	Door Closer	J7500	689	NO
1	Threshold	272A MSES25SS		PE
1	Rain Guard	346C		PE
1	Gasketing (mullion)	5110BL		PE

Set: 32.0

Doors: C117

3 Hinge TA2714 US26D MK 1 Classroom Lock CL3355 NZD CT6D 626 RU 1 Removable Core 8020 630 RU 1 Door Closer R7500H (or) PR7500H 689 NO 1 Kick Plate K1050 10" HVBEV US32D RO 1 Door Stop 403 (or) 441CU US26D RO 3 Silencer 608 (or) 609 GRY RO

Notes:

Set: 33.0
Doors: B103, B118, C127.1

3 Hinge TA2714 US26D MK 1 Privacy Set CL3320 NZD 626 RU 1 Mop Plate K1050 4" HVBEV US32D RO 1 Kick Plate K1050 10" HVBEV US32D RO 1 Door Stop 403 (or) 441CU US26D RO 3 Silencer 608 (or) 609 GRY RO

Set: 34.0
Doors: A111, A125, A211, A225, B214, C134

3 Hinge TA2714 US26D MK 1 Privacy Set CL3320 NZD 626 RU 1 Door Closer R7500 (or) PR7500 689 NO 1 Mop Plate K1050 4" HVBEV US32D RO 1 Kick Plate K1050 10" HVBEV US32D RO 1 Door Stop 403 (or) 441CU US26D RO 3 Silencer 608 (or) 609 GRY RO

Set: 35.0
Doors: C124

6 Hinge TA2714 US26D MK 1 Dust Proof Strike 570 US26D RO 2 Flush Bolt (manual) 555 (or) 557 US26D RO 1 Deadbolt DL4117 CT6 626 RU 1 Removable Core 8020 630 RU 2 Flush Pull (set) 94Px94L US32D RO 2 Surf Overhead Stop 10-X36 652 RF

NOT FOR BIDDING PURPOSES

2 Kick Plate K1050 10" HVBEV US32D RO 2 Silencer 608 (or) 609 GRY RO

Set: 36.0

Doors: C119B, C119C, C119D, C119E

2 Continuous Hinge CFM__SLF-HD1 - DOOR HEIGHT PE 2 Roller Latch 590 US26D RO 2 Flush Pull (set) 94Px94L US32D RO 2 Silencer 608 (or) 609 GRY RO

Set: 37.0

Doors: C127

3 Hinge TA2714 US26D MK 1 Push Plate 70G (4 x 20) US32D RO 1 Door Pull BF Y110 Mtg-Type 1 US32D RO 1 Door Closer R7500 (or) PR7500 689 NO 1 Mop Plate K1050 4" HVBEV US32D RO 1 Kick Plate K1050 10" HVBEV US32D RO 1 Door Stop 403 (or) 441CU US26D RO 3 Silencer 608 (or) 609 GRY RO

Set: 38.0

Doors: C108

6 Hinge TA2714 US26D MK 1 Dust Proof Strike 570 US26D RO 2 Flush Bolt (manual) 555 (or) 557 US26D RO 1 Storeroom Lock CL3357 NZD CT6R 626 RU 1 Removable Core 8020 630 RU 2 Door Stop 403 (or) 441CU US26D RO 1 Threshold 166A MSES10SS PE 1 Gasketing (head/jamb) S773BL PE 2 Sweep 315CN PE 2 Astragal (split) 297AS PE

Set: 39.0

Doors: A103, A104, A105, A106, A108, A109, A110, A121, A203, A204, A205, A206, A208, A222, B126, B127, B203, B204, B207, B210, B211, C109

3 Hinge TA2714 US26D MK 1 Storeroom Lock CL3357 NZD CT6R 626 RU 1 Removable Core 8020 630 RU 1 Door Stop 403 (or) 441CU US26D RO 1 Gasketing (head/jamb) S773BL PE

Set: 40.0

Doors: C107

3 Hinge TA2714 US26D MK 1 Storeroom Lock CL3357 NZD CT6R 626 RU 1 Removable Core 8020 630 RU 1 Door Stop 403 (or) 441CU US26D RO 1 Threshold 166A MSES10SS PE 1 Gasketing (head/jamb) S773BL PE 1 Sweep 315CN PE

NOT FOR BIDDING PURPOSES

Set: 41.0

Doors: A113, A127, A213, A227, B101, B106A, B106B, B110, B115B, B117B, B129, B212, C126

Notes:

2	Door Closer	J7500	689	NO
1	Threshold	272A MSES25SS		PE
1	Rain Guard	346C		PE
1	Gasketing (mullion)	5110BL		PE
2	Sweep (w/drip edge)	3452CNB		PE

Set: 42.0

Doors: C114

6 Hinge (heavy weight) T4A3786 US26D MK 2 Push Plate 70G (4 x 20) US32D RO 2 Door Closer PR7500 689 NO 2 Kick Plate K1050 10" HVBEV US32D RO 2 Door Stop 403 (or) 441CU US26D RO 2 Silencer 608 (or) 609 GRY RO

Set: 43.0

Doors: C101A, C101B

6 Hinge (heavy weight) T4A3786 US26D MK 2 Push Plate 70G (4 x 20) US32D RO 2 Door Pull BF Y110 Mtg-Type 1 US32D RO 2 Door Closer CLP7500T 689 NO 2 Kick Plate K1050 10" HVBEV US32D RO 2 Silencer 608 (or) 609 GRY RO

Set: 44.0

Doors: C123E

1 Continuous Hinge HG305 - DOOR HEIGHT 630 MR 1 Classroom Lock CL3355 NZD CT6D 626 RU 1 Removable Core 8020 630 RU 1 Door Closer R7500H (or) PR7500H 689 NO 1 Mop Plate K1050 4" HVBEV US32D RO 1 Armor Plate K1050 34" HVBEV US32D RO 1 Door Stop 403 (or) 441CU US26D RO 3 Silencer 608 (or) 609 GRY RO

Set: 45.0

Doors: C123A, C123D 1 Continuous Hinge HG305 - DOOR HEIGHT 630 MR 1 Classroom Lock CL3355 NZD CT6D 626 RU 1 Removable Core 8020 630 RU 1 Door Closer CLP7500T 689 NO 1 Mop Plate K1050 4" HVBEV US32D RO 1 Armor Plate K1050 34" HVBEV US32D RO 3 Silencer 608 (or) 609 GRY RO

NOT FOR BIDDING PURPOSES

Set: 46.0

Doors: GATE-1, GATE-2 (See Civil Drawings for gate locations at playground)

1 Gate Lock GL1-FSM SU 1 Cylinder (mortise) 1080 CT6R - LENGTH/CAM TO SUIT 630 RU 1 Removable Core 8020 630 RU 1 Door Pull BF Y110 Mtg-Type 1 US32D RO 1 Gate Closer 1351 689 RF 1 Door Loop TSB-C SU 1 Electromechanical Bar WEMB-CL SU 1 Power Supply BPS-24-1 RU

Notes: Balance of hardware by gate supplier. Connect power supply to fire alarm system. Card reader by security integrator. Electronic Operation: Valid card or key releases gate lock. Free egress at all times. In case of power loss or fire alarm, door remains unlocked and unlatched.

END OF SECTION 08 71 00

NOT FOR BIDDING PURPOSES

SECTION 08 80 00

GLAZING

PART 1 - GENERAL

1.1 RELATED DOCUMENTS

A. Drawings and general provisions of the Contract, including General and Supplementary Conditions and Division 01 Specification Sections, apply to this Section.

1.2 SUMMARY

A. Section includes glazing for the following products and applications, including those specified in other Sections where glazing requirements are specified by reference to this Section:

1. Glass for windows, doors, interior borrowed lites, and storefront framing.
2. Glazing sealants and accessories.

1.3 DEFINITIONS

A. Glass Manufacturers: Firms that produce primary glass, fabricated glass, or both, as defined in referenced glazing publications.

B. Glass Thicknesses: Indicated by thickness designations in millimeters according to ASTM C 1036.

C. IBC: International Building Code.

D. Interspace: Space between lites of an insulating-glass unit.

1.4 COORDINATION

A. Coordinate glazing channel dimensions to provide necessary bite on glass, minimum edge and face clearances, and adequate sealant thicknesses, with reasonable tolerances.

1.5 PREINSTALLATION MEETINGS

A. Preinstallation Conference: Conduct conference at Project site.

1.6 ACTION SUBMITTALS

A. Product Data: For each type of product.

B. Glass Samples: For each type of glass product other than clear monolithic vision glass; 12 inches square.

NOT FOR BIDDING PURPOSES

C. Glazing Accessory Samples: For gaskets sealants and colored spacers, in 12-inch lengths. Install sealant Samples between two strips of material representative in color of the adjoining framing system.

D. Glazing Schedule: List glass types and thicknesses for each size opening and location. Use same designations indicated on Drawings.

E. Delegated-Design Submittal: For glass indicated to comply with performance requirements and design criteria, including analysis data signed and sealed by the qualified professional engineer responsible for their preparation.

1.7 INFORMATIONAL SUBMITTALS

A. Qualification Data: For installers, manufacturers of insulating-glass units with sputter-coated, low-e coatings, glass testing agency and sealant testing agency.

B. Product Certificates: For glass and glazing products, from manufacturer.

C. Product Test Reports: Based on evaluation of comprehensive tests performed by a qualified testing agency, for coated glass, insulating glass, glazing sealants and glazing gaskets.

1. For glazing sealants, provide test reports based on testing current sealant formulations within previous 36-month period.

D. Preconstruction adhesion and compatibility test report.

E. Sample Warranties: For special warranties.

1.8 QUALITY ASSURANCE

A. Manufacturer Qualifications for Insulating-Glass Units with Sputter-Coated, Low-E Coatings: A qualified insulating-glass manufacturer who is approved and certified by coated-glass manufacturer.

B. Installer Qualifications: A qualified installer who employs glass installers for this Project who are certified under the National Glass Association's Certified Glass Installer Program.

C. Glass Testing Agency Qualifications: A qualified independent testing agency accredited according to the NFRC CAP 1 Certification Agency Program.

D. Sealant Testing Agency Qualifications: An independent testing agency qualified according to ASTM C 1021 to conduct the testing indicated.

E. Mockups: Build mockups to demonstrate aesthetic effects and to set quality standards for materials and execution.

1. Install glazing in mockups specified in Section 084113 "Aluminum-Framed Entrances and Storefronts" to match glazing systems required for Project, including glazing methods.

NOT FOR BIDDING PURPOSES

1.9 DELIVERY, STORAGE, AND HANDLING

A. Protect glazing materials according to manufacturer's written instructions. Prevent damage to glass and glazing materials from condensation, temperature changes, direct exposure to sun, or other causes.

B. Comply with insulating-glass manufacturer's written recommendations for venting and sealing units to avoid hermetic seal ruptures due to altitude change.

1.10 FIELD CONDITIONS

A. Environmental Limitations: Do not proceed with glazing when ambient and substrate temperature conditions are outside limits permitted by glazing material manufacturers and when glazing channel substrates are wet from rain, frost, condensation, or other causes.

1. Do not install glazing sealants when ambient and substrate temperature conditions are outside limits permitted by sealant manufacturer or below 40 deg F.

1.11 WARRANTY

A. Manufacturer's Special Warranty for Laminated Glass: Manufacturer agrees to replace laminated-glass units that deteriorate within specified warranty period. Deterioration of laminated glass is defined as defects developed from normal use that are not attributed to glass breakage or to maintaining and cleaning laminated glass contrary to manufacturer's written instructions. Defects include edge separation, delamination materially obstructing vision through glass, and blemishes exceeding those allowed by referenced laminated-glass standard.

1. Warranty Period: 10 years from date of Substantial Completion.

B. Manufacturer's Special Warranty on Insulating Glass: Manufacturer's standard form in which insulating-glass manufacturer agrees to replace insulating-glass units that deteriorate within specified warranty period. Deterioration of insulating glass is defined as failure of hermetic seal under normal use that is not attributed to glass breakage or to maintaining and cleaning insulating glass contrary to manufacturer's written instructions. Evidence of failure is the obstruction of vision by dust, moisture, or film on interior surfaces of glass.

1. Warranty Period: 10 years from date of Substantial Completion.

PART 2 - PRODUCTS

2.1 MANUFACTURERS

A. Manufacturers: Subject to compliance with requirements, available manufacturers offering products that may be incorporated into the Work include, but are not limited to, the following:

1. AGC Flat Glass North America.
2. Cardinal Glass Industries, Inc.
3. Guardian Industries Corp.
4. Oldcastle Glass.
5. Vitro Architectural Glass (Formerly PPG Glass).

NOT FOR BIDDING PURPOSES

2.2 PERFORMANCE REQUIREMENTS

A. General: Installed glazing systems shall withstand normal thermal movement and wind and impact loads (where applicable) without failure, including loss or glass breakage attributable to the following: defective manufacture, fabrication, or installation; failure of sealants or gaskets to remain watertight and airtight; deterioration of glazing materials; or other defects in construction.

B. Structural Performance: Glazing shall withstand the following design loads within limits and under conditions indicated determined according to the IBC and ASTM E 1300.

1. Design Wind Pressures: As indicated on Drawings.
2. Design Wind Pressures: Determine design wind pressures applicable to Project according to ASCE/SEI 7, based on heights above grade indicated on Drawings.

   a. Wind Design Data: As indicated on Drawings.

C. Safety Glazing: Where safety glazing is indicated, provide glazing that complies with 16 CFR 1201, Category II.

D. Thermal and Optical Performance Properties: Provide glass with performance properties specified, as indicated in manufacturer's published test data, based on procedures indicated below:

1. For monolithic-glass lites, properties are based on units with lites 6 mm thick.
2. For laminated-glass lites, properties are based on products of construction indicated.
3. For insulating-glass units, properties are based on units of thickness indicated for overall unit and for each lite.
4. U-Factors: Center-of-glazing values, according to NFRC 100 and based on LBL's WINDOW 5.2 computer program, expressed as Btu/sq. ft. x h x deg F.
5. Solar Heat-Gain Coefficient and Visible Transmittance: Center-of-glazing values, according to NFRC 200 and based on LBL's WINDOW 5.2 computer program.
6. Visible Reflectance: Center-of-glazing values, according to NFRC 300.

2.3 GLASS PRODUCTS, GENERAL

A. Glazing Publications: Comply with published recommendations of glass product manufacturers and organizations below unless more stringent requirements are indicated. See these publications for glazing terms not otherwise defined in this Section or in referenced standards.

1. GANA Publications: "Laminated Glazing Reference Manual" and]"Glazing Manual."
2. IGMA Publication for Insulating Glass: SIGMA TM-3000, "North American Glazing Guidelines for Sealed Insulating Glass Units for Commercial and Residential Use."

B. Safety Glazing Labeling: Where safety glazing is indicated, permanently mark glazing with certification label of the SGCC or another certification agency acceptable to authorities having jurisdiction. Label shall indicate manufacturer's name, type of glass, thickness, and safety glazing standard with which glass complies.

C. Insulating-Glass Certification Program: Permanently marked either on spacers or on at least one component lite of units with appropriate certification label of IGCC.

D. Thickness: Where glass thickness is indicated, it is a minimum. Provide glass that complies with performance requirements and is not less than the thickness indicated.

NOT FOR BIDDING PURPOSES

1. Minimum Glass Thickness for Exterior Lites: 6 mm.

E. Strength: Where annealed float glass is indicated, provide annealed float glass, heat-strengthened float glass, or fully tempered float glass as needed to comply with "Performance Requirements" Article. Where heat-strengthened float glass is indicated, provide heat-strengthened float glass or fully tempered float glass as needed to comply with "Performance Requirements" Article. Where fully tempered float glass is indicated, provide fully tempered float glass.

2.4 GLASS PRODUCTS

A. Clear Annealed Float Glass: ASTM C 1036, Type I, Class 1 (clear), Quality-Q3.

B. Fully Tempered Float Glass: ASTM C 1048, Kind FT (fully tempered), Condition A (uncoated) unless otherwise indicated, Type I, Class 1 (clear) or Class 2 (tinted) as indicated, Quality-Q3.

1. Fabrication Process: By horizontal (roller-hearth) process with roll-wave distortion parallel to bottom edge of glass as installed unless otherwise indicated.

C. Heat-Strengthened Float Glass: ASTM C 1048, Kind HS (heat strengthened), Type I, Condition A (uncoated) unless otherwise indicated, Type I, Class 1 (clear) or Class 2 (tinted) as indicated, Quality-Q3.

1. Fabrication Process: By horizontal (roller-hearth) process with roll-wave distortion parallel to bottom edge of glass as installed unless otherwise indicated.

2.5 LAMINATED GLASS

A. Laminated Glass: ASTM C 1172. Use materials that have a proven record of no tendency to bubble, discolor, or lose physical and mechanical properties after fabrication and installation.

1. Construction: Laminate glass with polyvinyl butyral interlayer for interior locations and ionomeric polymer interlayer for exterior locations to comply with interlayer manufacturer's written instructions.
2. Interlayer Thickness: Provide thickness not less than that indicated and as needed to comply with requirements.
3. Interlayer Color: Clear unless otherwise indicated.

2.6 INSULATING GLASS

A. Insulating-Glass Units: Factory-assembled units consisting of sealed lites of glass separated by a dehydrated interspace, qualified according to ASTM E 2190.

1. Sealing System: Dual seal, with manufacturer's standard primary and secondary sealants.
2. Perimeter Spacer: Manufacturer's standard spacer material and construction.
3. Desiccant: Molecular sieve or silica gel, or a blend of both.

2.7 GLAZING SEALANTS

A. General:

NOT FOR BIDDING PURPOSES

1. Compatibility: Compatible with one another and with other materials they contact, including glass products, seals of insulating-glass units, and glazing channel substrates, under conditions of service and application, as demonstrated by sealant manufacturer based on testing and field experience.
2. Suitability: Comply with sealant and glass manufacturers' written instructions for selecting glazing sealants suitable for applications indicated and for conditions existing at time of installation.
3. Colors of Exposed Glazing Sealants: As selected by Architect from manufacturer's full range.

B. Glazing Sealant: Neutral-curing silicone glazing sealant complying with ASTM C 920, Type S, Grade NS, Class 100/50, Use NT.

2.8 GLAZING TAPES

A. Back-Bedding Mastic Glazing Tapes: Preformed, butyl-based, 100 percent solids elastomeric tape; nonstaining and nonmigrating in contact with nonporous surfaces; with or without spacer rod as recommended in writing by tape and glass manufacturers for application indicated; and complying with ASTM C 1281 and AAMA 800 for products indicated below:

1. AAMA 804.3 tape, where indicated.
2. AAMA 806.3 tape, for glazing applications in which tape is subject to continuous pressure.
3. AAMA 807.3 tape, for glazing applications in which tape is not subject to continuous pressure.

B. Expanded Cellular Glazing Tapes: Closed-cell, PVC foam tapes; factory coated with adhesive on both surfaces; and complying with AAMA 800 for the following types:

1. AAMA 810.1, Type 1, for glazing applications in which tape acts as the primary sealant.
2. AAMA 810.1, Type 2, for glazing applications in which tape is used in combination with a full bead of liquid sealant.

2.9 MISCELLANEOUS GLAZING MATERIALS

A. General: Provide products of material, size, and shape complying with referenced glazing standard, with requirements of manufacturers of glass and other glazing materials for application indicated, and with a proven record of compatibility with surfaces contacted in installation.

B. Cleaners, Primers, and Sealers: Types recommended by sealant or gasket manufacturer.

C. Setting Blocks: Elastomeric material with a Shore, Type A durometer hardness of 85, plus or minus 5.

D. Spacers: Elastomeric blocks or continuous extrusions of hardness required by glass manufacturer to maintain glass lites in place for installation indicated.

E. Edge Blocks: Elastomeric material of hardness needed to limit glass lateral movement (side walking).

NOT FOR BIDDING PURPOSES

F. Cylindrical Glazing Sealant Backing: ASTM C 1330, Type O (open-cell material), of size and density to control glazing sealant depth and otherwise produce optimum glazing sealant performance.

2.10 FABRICATION OF GLAZING UNITS

A. Fabricate glazing units in sizes required to fit openings indicated for Project, with edge and face clearances, edge and surface conditions, and bite complying with written instructions of product manufacturer and referenced glazing publications, to comply with system performance requirements.

1. Allow for thermal movements from ambient and surface temperature changes acting on glass framing members and glazing components.

a. Temperature Change: 120 deg F, ambient; 180 deg F, material surfaces.

PART 3 - EXECUTION

3.1 EXAMINATION

A. Examine framing, glazing channels, and stops, with Installer present, for compliance with the following:

1. Manufacturing and installation tolerances, including those for size, squareness, and offsets at corners.
2. Presence and functioning of weep system.
3. Minimum required face or edge clearances.
4. Effective sealing between joints of glass-framing members.

B. Proceed with installation only after unsatisfactory conditions have been corrected.

3.2 PREPARATION

A. Clean glazing channels and other framing members receiving glass immediately before glazing. Remove coatings not firmly bonded to substrates.

B. Examine glazing units to locate exterior and interior surfaces. Label or mark units as needed so that exterior and interior surfaces are readily identifiable. Do not use materials that leave visible marks in the completed Work.

3.3 GLAZING, GENERAL

A. Comply with combined written instructions of manufacturers of glass, sealants, gaskets, and other glazing materials, unless more stringent requirements are indicated, including those in referenced glazing publications.

B. Protect glass edges from damage during handling and installation. Remove damaged glass from Project site and legally dispose of off Project site. Damaged glass includes glass with edge damage or other imperfections that, when installed, could weaken glass, impair performance, or impair appearance.

NOT FOR BIDDING PURPOSES

C. Apply primers to joint surfaces where required for adhesion of sealants, as determined by preconstruction testing.

D. Install setting blocks in sill rabbets, sized and located to comply with referenced glazing publications, unless otherwise required by glass manufacturer. Set blocks in thin course of compatible sealant suitable for heel bead.

E. Do not exceed edge pressures stipulated by glass manufacturers for installing glass lites.

F. Provide spacers for glass lites where length plus width is larger than 50 inches as follows:

1. Locate spacers directly opposite each other on both inside and outside faces of glass. Install correct size and spacing to preserve required face clearances, unless gaskets and glazing tapes are used that have demonstrated ability to maintain required face clearances and to comply with system performance requirements.
2. Provide 1/8-inch minimum bite of spacers on glass and use thickness equal to sealant width. With glazing tape, use thickness slightly less than final compressed thickness of tape.

G. Provide edge blocking where indicated or needed to prevent glass lites from moving sideways in glazing channel, as recommended in writing by glass manufacturer and according to requirements in referenced glazing publications.

H. Set glass lites in each series with uniform pattern, draw, bow, and similar characteristics.

I. Where wedge-shaped gaskets are driven into one side of channel to pressurize sealant or gasket on opposite side, provide adequate anchorage so gasket cannot walk out when installation is subjected to movement.

J. Square cut wedge-shaped gaskets at corners and install gaskets in a manner recommended by gasket manufacturer to prevent corners from pulling away; seal corner joints and butt joints with sealant recommended by gasket manufacturer.

3.4 TAPE GLAZING

A. Position tapes on fixed stops so that, when compressed by glass, their exposed edges are flush with or protrude slightly above sightline of stops.

B. Install tapes continuously, but not necessarily in one continuous length. Do not stretch tapes to make them fit opening.

C. Cover vertical framing joints by applying tapes to heads and sills first and then to jambs. Cover horizontal framing joints by applying tapes to jambs and then to heads and sills.

D. Place joints in tapes at corners of opening with adjoining lengths butted together, not lapped. Seal joints in tapes with compatible sealant approved by tape manufacturer.

E. Do not remove release paper from tape until just before each glazing unit is installed.

F. Apply heel bead of elastomeric sealant where indicated.

G. Center glass lites in openings on setting blocks and press firmly against tape by inserting dense compression gaskets formed and installed to lock in place against faces of removable stops. Start gasket applications at corners and work toward centers of openings.

NOT FOR BIDDING PURPOSES

H. Apply cap bead of elastomeric sealant over exposed edge of tape where indicated.

3.5 GASKET GLAZING (DRY)

A. Cut compression gaskets to lengths recommended by gasket manufacturer to fit openings exactly, with allowance for stretch during installation.

B. Insert soft compression gasket between glass and frame or fixed stop so it is securely in place with joints miter cut and bonded together at corners.

C. Installation with Drive-in Wedge Gaskets: Center glass lites in openings on setting blocks, and press firmly against soft compression gasket by inserting dense compression gaskets formed and installed to lock in place against faces of removable stops. Start gasket applications at corners and work toward centers of openings. Compress gaskets to produce a weathertight seal without developing bending stresses in glass. Seal gasket joints with sealant recommended by gasket manufacturer.

D. Installation with Pressure-Glazing Stops: Center glass lites in openings on setting blocks, and press firmly against soft compression gasket. Install dense compression gaskets and pressure-glazing stops, applying pressure uniformly to compression gaskets. Compress gaskets to produce a weathertight seal without developing bending stresses in glass. Seal gasket joints with sealant recommended by gasket manufacturer.

E. Install gaskets so they protrude past face of glazing stops.

3.6 SEALANT GLAZING (WET)

A. Install continuous spacers, or spacers combined with cylindrical sealant backing, between glass lites and glazing stops to maintain glass face clearances and to prevent sealant from extruding into glass channel and blocking weep systems until sealants cure. Secure spacers or spacers and backings in place and in position to control depth of installed sealant relative to edge clearance for optimum sealant performance.

B. Force sealants into glazing channels to eliminate voids and to ensure complete wetting or bond of sealant to glass and channel surfaces.

C. Tool exposed surfaces of sealants to provide a substantial wash away from glass.

3.7 CLEANING AND PROTECTION

A. Immediately after installation remove nonpermanent labels and clean surfaces.

B. Protect glass from contact with contaminating substances resulting from construction operations. Examine glass surfaces adjacent to or below exterior concrete and other masonry surfaces at frequent intervals during construction, but not less than once a month, for buildup of dirt, scum, alkaline deposits, or stains.

1. If, despite such protection, contaminating substances do come into contact with glass, remove substances immediately as recommended in writing by glass manufacturer. Remove and replace glass that cannot be cleaned without damage to coatings.

C. Remove and replace glass that is damaged during construction period.

NOT FOR BIDDING PURPOSES

D. Wash glass on both exposed surfaces not more than four days before date scheduled for inspections that establish date of Substantial Completion. Wash glass as recommended in writing by glass manufacturer.

3.8 MONOLITHIC GLASS SCHEDULE

A. Glass Type (Gl-1): Clear fully tempered float glass.

1. Minimum Thickness: 6 mm.
2. Safety glazing required.

B. Provide Gl-1 at Interior Doors and Sidelights.

3.9 LAMINATED GLASS SCHEDULE

A. Glass Type LG-1 (At Vestibule Doors and Transoms): Clear laminated glass with two plies of annealed float glass.

1. Minimum Thickness of Each Glass Ply: 6 mm.
2. Interlayer Thickness: 0.030 inch.
3. Safety glazing required.

3.10 INSULATING GLASS SCHEDULE

A. Glass Type (IG-1): Pyrolytic-coated, self-cleaning, low-maintenance, low-E coated, clear insulating glass.

1. Overall Unit Thickness: 1 inch.
2. Minimum Thickness of Each Glass Lite: 6 mm.
3. Outdoor Lite: Pyrolytic-coated, self-cleaning, low-maintenance, clear fully tempered float glass.
4. Interspace Content: Air.
5. Indoor Lite: Clear heat-strengthened float glass.
6. Low-E Coating: Pyrolytic on second or third surface. Equal to Solarban 60.
7. Total Solar Energy Transmission: 34 percent.
8. Shading Coefficient: 0.45 maximum.
9. Visible Light Transmittance: 70 percent minimum.
10. Solar Heat Gain Coefficient: 0.39 maximum.
11. U values:

a. Winter Night Time: 0.29
b. Summer Day Time: 0.27.

B. Glass Type (IG-2): At Exterior Doors and Transoms/Sidelights, same as IG-1 except:

1. High Impact Insulated Units: Insulated glass in select areas constructed using 3/8 inch laminated glass for exterior pane and 1/4 inch tempered glass with Low E coating for interior pane.

END OF SECTION 08 80 00

NOT FOR BIDDING PURPOSES

NOT FOR BIDDING PURPOSES

SECTION 09 30 00 - TILING

PART 1 - GENERAL

1.1 RELATED DOCUMENTS

A. Drawings and general provisions of the Contract, including General and Supplementary Conditions and Division 01 Specification Sections, apply to this Section.

1.2 SUMMARY

A. Section Includes:

1. Ceramic tile.
2. Porcelain Tile.
3. Stone thresholds.
4. Metal edge strips.

B. Related Sections:

1. Section 079200 "Joint Sealants" for sealing of expansion, contraction, control, and isolation joints in tile surfaces.
2. Section 092900 "Gypsum Board".

1.3 DEFINITIONS

A. General: Definitions in the ANSI A108 series of tile installation standards and in ANSI A137.1 apply to Work of this Section unless otherwise specified.

B. ANSI A108 Series: ANSI A108.01, ANSI A108.02, ANSI A108.1A, ANSI A108.1B, ANSI A108.1C, ANSI A108.4, ANSI A108.5, ANSI A108.6, ANSI A108.8, ANSI A108.9, ANSI A108.10, ANSI A108.11, ANSI A108.12, ANSI A108.13, ANSI A108.14, ANSI A108.15, ANSI A108.16, and ANSI A108.17, which are contained in "American National Standard Specifications for Installation of Ceramic Tile."

C. Module Size: Actual tile size plus joint width indicated.

D. Face Size: Actual tile size, excluding spacer lugs.

1.4 PERFORMANCE REQUIREMENTS

A. Static Coefficient of Friction: For tile installed on walkway surfaces, provide products with the following values as determined by testing identical products per ASTM C 1028:

1. Level Surfaces: Minimum 0.6.
2. Step Treads: Minimum 0.6.
3. Ramp Surfaces: Minimum 0.8.

1.5 ACTION SUBMITTALS

A. Product Data: For each type of product indicated.

B. Shop Drawings: Show locations of each type of tile and tile pattern. Show widths, details, and locations of expansion, contraction, control, and isolation joints in tile substrates and finished tile surfaces.

C. Samples for Initial Selection: For each type of tile and grout indicated. Include Samples of accessories involving color selection.

D. Samples for Verification:

1. Full-size units of each type and composition of tile and for each color and finish required.
2. Assembled samples mounted on a rigid panel, with grouted joints, for each type and composition of tile and for each color and finish required. Make samples at least 12 inches (300 mm) square but not fewer than 4 tiles. Use grout of type and in color or colors approved for completed Work.
3. Full-size units of each type of trim and accessory for each color and finish required.
4. Stone thresholds in 6-inch (150-mm) lengths.
5. Metal edge strips in 6-inch (150-mm) lengths.

1.6 INFORMATIONAL SUBMITTALS

A. Qualification Data: For qualified Installer.

B. Master Grade Certificates: For each shipment, type, and composition of tile, signed by tile manufacturer and Installer.

C. Product Certificates: For each type of product, signed by product manufacturer.

D. Material Test Reports: For each tile-setting and -grouting product and special purpose tile.

1.7 QUALITY ASSURANCE

A. Source Limitations for Tile: Obtain tile of each type and color or finish from one source or producer.

1. Obtain tile of each type and color or finish from same production run and of consistent quality in appearance and physical properties for each contiguous area.

B. Source Limitations for Setting and Grouting Materials: Obtain ingredients of a uniform quality for each mortar, adhesive, and grout component from one manufacturer and each aggregate from one source or producer.

NOT FOR BIDDING PURPOSES

C. Source Limitations for Other Products: Obtain each of the following products specified in this Section from a single manufacturer for each product:

1. Stone thresholds.
2. Waterproof membrane.
3. Joint sealants.
4. Cementitious backer units.
5. Metal edge strips.

D. Preinstallation Conference: Conduct conference at Project site.

1. Review requirements in ANSI A108.01 for substrates and for preparation by other trades.

1.8 DELIVERY, STORAGE, AND HANDLING

A. Deliver and store packaged materials in original containers with seals unbroken and labels intact until time of use. Comply with requirements in ANSI A137.1 for labeling tile packages.

B. Store tile and cementitious materials on elevated platforms, under cover, and in a dry location.

C. Store aggregates where grading and other required characteristics can be maintained and contamination can be avoided.

D. Store liquid materials in unopened containers and protected from freezing.

E. Handle tile that has temporary protective coating on exposed surfaces to prevent coated surfaces from contacting backs or edges of other units. If coating does contact bonding surfaces of tile, remove coating from bonding surfaces before setting tile.

1.9 PROJECT CONDITIONS

A. Environmental Limitations: Do not install tile until construction in spaces is complete and ambient temperature and humidity conditions are maintained at the levels indicated in referenced standards and manufacturer's written instructions.

1.11 EXTRA MATERIALS

A. Furnish extra materials described below that match products installed and that are packaged with protective covering for storage and identified with labels describing contents.

1. Tile and Trim Units: Furnish quantity of full-size units equal to 3 percent of amount installed, for each type, composition, color, pattern, and size indicated.
2. Grout: Furnish Quantity of grout equal to 3 percent of amount installed for each type, composition and color indicated.

NOT FOR BIDDING PURPOSES

PART 2 - PRODUCTS

2.1 PRODUCTS, GENERAL

B. ANSI Ceramic Tile Standard: Provide tile that complies with ANSI A137.1 for types, compositions, and other characteristics indicated.

1. Provide tile complying with Standard grade requirements unless otherwise indicated.

C. ANSI Standards for Tile Installation Materials: Provide materials complying with ANSI A108.02, ANSI standards referenced in other Part 2 articles, ANSI standards referenced by TCA installation methods specified in tile installation schedules, and other requirements specified.

D. FloorScore Compliance: Tile for floors shall comply with requirements of FloorScore Standard.

E. Low-Emitting Materials: Tile flooring systems shall comply with the testing and product requirements of the California Department of Health Services' "Standard Practice for the Testing of Volatile Organic Emissions from Various Sources Using Small-Scale Environmental Chambers."

F. Factory Blending: For tile exhibiting color variations within ranges, blend tile in factory and package so tile units taken from one package show same range in colors as those taken from other packages and match approved Samples.

G. Mounting: For factory-mounted tile, provide back- or edge-mounted tile assemblies as standard with manufacturer unless otherwise indicated.

H. Factory-Applied Temporary Protective Coating: Where indicated under tile type, protect exposed surfaces of tile against adherence of mortar and grout by precoating with continuous film of petroleum paraffin wax, applied hot. Do not coat unexposed tile surfaces.

2.2 TILE PRODUCTS

A. Available Manufacturers basis of design product: Provide Daltile as identified and shown on the schedule. Subject to compliance with requirements manufacturers providing acceptable products include, but are not limited to:

1. American Olean; Div. of Dal-Tile International Corp.
2. Crossville Ceramics Company, L.P.
3. Approved Equal

B. Wall Tile WT-1, WT-2, WT-3, WT-4, WT-5, WT-7, WT-8, WT-9: Daltile, Semi-gloss

1. Composition: Ceramic.
2. Surface: Smooth.
3. Module Size: 6” X 6”.
4. Nominal Thickness: 5/16”
5. Face: Polished.

NOT FOR BIDDING PURPOSES

6. Colors:
   a. WT-1: K775 Biscuit
   b. WT-2: Q467 Wood Violet
   c. WT-3: Q140 Citric Bloom
   d. WT-4: I469 Galaxy
   e. WT-5: K775 Biscuit (Bullnose top S.4369)
   f. WT-7: DH50 Sunflower
   g. WT-8: QF93 Candy Apple
   h. WT-9: Q151 Totally Tangerine

C. Wall Tile WT-6, WT-10: Daltile, Rittenhouse Square

1. Composition: Ceramic.
2. Surface: Smooth.
3. Module Size: 3” X 6”
4. Nominal Thickness: 5/16”
5. Face: Polished.
6. Colors:
   a. WT-6: X714 Desert Gray Gloss (Matte)
   b. WT-10: X114 Desert Gray Gloss

D. Wall Tile WT-12 Daltile, Bee Hive

1. Composition: Porcelain.
2. Surface: Polished.
3. Module Size: 20” X 24”.
4. Nominal Thickness: 3/8”.
5. Face: Plain.
6. Color: WT-12: P006 White

E. Wall Tile WT-13 Daltile, Beehive
1. Composition: Porcelain.
2. Surface: Polished.
3. Module Size: 20” X 24”.
4. Nominal Thickness: 3/8”.
5. Face: Plain.
6. Color: WT-13: P016 Honey Comb Cool

F. Wall Tile WT-11: Daltile, Tile Liner # S-1/2 12J

1. Composition: Ceramic.
2. Surface: Smooth.
3. Module Size: 1/2” X 11-15/16” bullnose.
4. Nominal Thickness: 3/8”.
5. Type: Jolly.
6. Color: WT-11: 0780 Chalkboard

G. Wall Tile WT-14: Daltile, Coastal Keystones

1. Composition: Porcelain Mosaic
2. Surface: Polished and Unpolished.

NOT FOR BIDDING PURPOSES

3. Module Size: 1” Hexagon Mosaic.
4. Nominal Thickness: 1/4”.
5. Color: WT-14: CK91 Island Harvest (Hex mosaics)

H. Wall Tile W-15: Daltile, Linear
1. Composition: Bullnose Tile #S-43C9
2. Surface: Polished and Unpolished.
3. Module Size: 3” x 12”
4. Color: TBD

I. Porcelain Trim Units: Matching characteristics of adjoining flat tile and coordinated with sizes and coursing of adjoining flat tile where applicable. Provide shapes as follows, selected from manufacturer's standard shapes:

1. Internal Corners: Cove, module match to corresponding tile.

J. Stainless Steel Edge Protection: For outside corners provide shapes and sizes as required, selected from manufacturer’s standard shapes as follows: Schluter-Rondec, Stainless Steel 304

2.3 THRESHOLDS

A. General: Fabricate to sizes and profiles indicated or required to provide transition between adjacent floor finishes.

1. Bevel edges at 1:2 slope, with lower edge of bevel aligned with or up to 1/16 inch (1.5 mm) above adjacent floor surface. Finish bevel to match top surface of threshold. Limit height of threshold to 1/2 inch (12.7 mm) or less above adjacent floor surface.

2.4 SETTING AND GROUTING MATERIALS

A. Subject to compliance with specifications, provide Bostik, Tru Color pre-mixed grout or a comparable product by one of the following:

1. Bonsal, W. R., Company.
2. LATICRETE International Inc.
3. MAPEI Corporation.

B. Latex-Portland Cement Mortar (Thin Set): ANSI A118.4, consisting of the following:

1. Latex additive (water emulsion) of type described below, serving as replacement for part or all of gauging water, combined at job site with prepackaged dry mortar mix supplied or specified by latex additive manufacturer.
2. Latex Type: Acrylic resin.
3. For wall applications, provide nonsagging mortar that complies with Paragraph F-4.6.1 in addition to the other requirements in ANSI A118.4.

C. Modified epoxy emulsion mortar (thin set): ANSI 118.8 consisting of the following:

NOT FOR BIDDING PURPOSES

1. Emulsified epoxy resins and hardeners with portland cement and silica sand intended for exterior applications

D. Latex-Portland Cement Grout: ANSI A118.6, composition as follows:

1. Latex additive (water emulsion) serving as replacement for part or all of gauging water, added at job site with dry grout mixture, with type of latex and dry grout mix as follows:
2. Latex Type: Acrylic resin.
3. Dry Grout Mixture: Dry-set grout specified or supplied by latex additive manufacturer. Use latex additive without retarder with dry-set grout.

E. Water-Cleanable Epoxy Grout: ANSI A118.3.

1. Manufacturers: Subject to compliance with requirements, available manufacturers offering products that may be incorporated into the Work include, but are not limited to, the following:

a. Atlas Minerals & Chemicals, Inc.
b. Boiardi Products; a QEP company.
c. Bonsal American; an Oldcastle company.
d. Bostik, Inc.
e. C-Cure.
f. Custom Building Products.
g. Jamo Inc.
h. Laticrete International, Inc.
i. MAPEI Corporation.
j. Mer-Kote Products, Inc.
k. Southern Grouts & Mortars, Inc.
l. Summitville Tiles, Inc.
m. TEC; a subsidiary of H. B. Fuller Company.

2. Provide product capable of withstanding continuous and intermittent exposure to temperatures of up to 140 deg F (60 deg C) and 212 deg F (100 deg C), respectively, and certified by manufacturer for intended use.

2.5 ELASTOMERIC SEALANTS

A. General: Provide manufacturer's standard chemically curing, elastomeric sealants of base polymer and characteristics indicated that comply with applicable requirements in Division 7 Section "Joint Sealants."

1. Use sealants that have a VOC content of 250 g/L or less when calculated according to 40 CFR 59, Subpart D (EPA Method 24).

B. Colors: Provide colors of exposed sealants to match colors of grout in tile adjoining sealed joints, unless otherwise indicated.

C. One-Part, Mildew-Resistant Silicone Sealant: ASTM C 920; Type S; Grade NS; Class 25; Uses NT, G, A, and, as applicable to nonporous joint substrates indicated, O; formulated with fungicide, intended for sealing interior ceramic tile joints and other nonporous substrates that

NOT FOR BIDDING PURPOSES

are subject to in-service exposures of high humidity and extreme temperatures. Subject to compliance with requirements manufacturers providing acceptable products include, but are not limited to:

1. Products:

    a. Dow Corning Corporation; Dow Corning 786.
    b. GE Silicones; Sanitary 1700.
    c. Pecora Corporation; Pecora 898 Sanitary Silicone Sealant.
    d. Tremco, Inc.; Tremsil 600 White.

2.6 MISCELLANEOUS MATERIALS

A. Trowelable Underlayments and Patching Compounds: Latex-modified, portland cement-based formulation provided or approved by manufacturer of tile-setting materials for installations indicated.

B. Cementitious backer Sheet. Polymer–modified fiber reinforced units complying with ANSI A118.9, of thickness and width indicated below, and in maximum lengths available to minimize end-to-end butt joints.

1. Thickness: Not more than 3/8 inch thickness
2. Products: Subject to compliance with requirements manufacturers providing acceptable products include, but are not limited to:
    a. 3/8" "Hardie" 500
    b. ¼" Permabase; National Gypsum Co.:

C. Metal Edge Strips: Angle or L-shape, height to match tile and setting-bed thickness, metallic or combination of metal and PVC or neoprene base, designed specifically for flooring applications, stainless steel; ASTM A 666, 300 Series exposed-edge material.

D. Temporary Protective Coating: Product indicated below that is formulated to protect exposed surfaces of tile against adherence of mortar and grout; compatible with tile, mortar, and grout products; and easily removable after grouting is completed without damaging grout or tile.

1. Petroleum paraffin wax, fully refined and odorless, containing at least 0.5 percent oil with a melting point of 120 to 140 deg F (49 to 60 deg C) per ASTM D 87.
2. Grout release in form of manufacturer's standard proprietary liquid coating that is specially formulated and recommended for use as temporary protective coating for tile.

E. Tile Cleaner: A neutral cleaner capable of removing soil and residue without harming tile and grout surfaces, specifically approved for materials and installations indicated by tile and grout manufacturers.

F. Grout Sealer: Manufacturer's standard product for sealing grout joints that does not change color or appearance of grout. Subject to compliance with requirements manufacturers providing acceptable products include, but are not limited to:

1. Products:

NOT FOR BIDDING PURPOSES

a. Bonsal, W. R., Company; Grout Sealer.
b. Bostik; CeramaSeal Grout Sealer.
c. C-Cure; Penetrating Sealer 978.
d. Custom Building Products; Grout and Tile Sealer.
e. Jamo Inc.; Penetrating Sealer.
f. MAPEI Corporation; KER 004, Keraseal Penetrating Sealer for Unglazed Grout and Tile.
g. Southern Grouts & Mortars, Inc.; Silicone Grout Sealer.
h. Summitville Tiles, Inc.; SL-15, Invisible Seal Penetrating Grout and Tile Sealer.
i. TEC Specialty Products Inc.; TA-256 Penetrating Silicone Grout Sealer.

2.7 MIXING MORTARS AND GROUT

A. Mix mortars and grouts to comply with referenced standards and mortar and grout manufacturers' written instructions.

B. Add materials, water, and additives in accurate proportions.

C. Obtain and use type of mixing equipment, mixer speeds, mixing containers, mixing time, and other procedures to produce mortars and grouts of uniform quality with optimum performance characteristics for installations indicated.

PART 3 - EXECUTION

3.1 EXAMINATION

A. Examine substrates, areas, and conditions where tile will be installed, with Installer present, for compliance with requirements for installation tolerances and other conditions affecting performance of installed tile.

1. Verify that substrates for setting tile are firm; dry; clean; free of oil, waxy films, and curing compounds; and within flatness tolerances required by referenced ANSI A108 Series of tile installation standards for installations indicated.

2. Verify that installation of grounds, anchors, recessed frames, electrical and mechanical units of work, and similar items located in or behind tile has been completed before installing tile.
3. Verify that joints and cracks in tile substrates are coordinated with tile joint locations; if not coordinated, adjust joint locations in consultation with Architect.

B. Proceed with installation only after unsatisfactory conditions have been corrected.

3.2 PREPARATION

A. Remove coatings, including curing compounds and other substances that contain soap, wax, oil, or silicone, that are incompatible with tile-setting materials.

NOT FOR BIDDING PURPOSES

B. Provide concrete substrates for tile floors installed with thin-set mortar that comply with flatness tolerances specified in referenced ANSI A108 Series of tile installation standards.

1. Fill cracks, holes, and depressions with trowelable leveling and patching compound according to tile-setting material manufacturer's written instructions. Use product specifically recommended by tile-setting material manufacturer.
2. Remove protrusions, bumps, and ridges by sanding or grinding.

C. Blending: For tile exhibiting color variations within ranges selected during Sample submittals, verify that tile has been factory blended and packaged so tile units taken from one package show same range of colors as those taken from other packages and match approved Samples. If not factory blended, either return to manufacturer or blend tiles at Project site before installing.

D. Field-Applied Temporary Protective Coating: Where indicated under tile type or needed to prevent grout from staining or adhering to exposed tile surfaces, precoat them with continuous film of temporary protective coating, taking care not to coat unexposed tile surfaces.

3.3 INSTALLATION, GENERAL

A. ANSI Tile Installation Standards: Comply with parts of ANSI A108 Series "Specifications for Installation of Ceramic Tile" that apply to types of setting and grouting materials and to methods indicated in ceramic tile installation schedules.

B. TCA Installation Guidelines: TCA's "Handbook for Ceramic Tile Installation." Comply with TCA installation methods indicated in ceramic tile installation schedules.

C. Extend tile work into recesses and under or behind equipment and fixtures to form complete covering without interruptions, unless otherwise indicated. Terminate work neatly at obstructions, edges, and corners without disrupting pattern or joint alignments.

D. Accurately form intersections and returns. Perform cutting and drilling of tile without marring visible surfaces. Carefully grind cut edges of tile abutting trim, finish, or built-in items for straight aligned joints. Fit tile closely to electrical outlets, piping, fixtures, and other penetrations so plates, collars, or covers overlap tile.

E. Jointing Pattern: Lay tile in grid pattern, unless otherwise indicated. Align joints when adjoining tiles on floor, base, walls, and trim are same size. Lay out tile work and center tile fields in both directions in each space or on each wall area. Adjust to minimize tile cutting. Provide uniform joint widths, unless otherwise indicated.

1. For tile mounted in sheets, make joints between tile sheets same width as joints within tile sheets so joints between sheets are not apparent in finished work.

F. Lay out tile wainscots to next full tile beyond dimensions indicated.

G. Expansion Joints: Locate expansion joints and other sealant-filled joints, including control, contraction, and isolation joints, where indicated during installation of setting materials, mortar beds, and tile. Do not saw-cut joints after installing tiles.

NOT FOR BIDDING PURPOSES

1. Locate joints in tile surfaces directly above joints in concrete substrates.
2. Prepare joints and apply sealants to comply with requirements in Division 7 Section "Joint Sealants."

H. Grout tile to comply with requirements of the following tile installation standards:

1. For ceramic tile grouts (sand-portland cement; dry-set, commercial portland cement; and latex-portland cement grouts), comply with ANSI A108.10.
2. For chemical-resistant epoxy grouts, comply with ANSI A108.6.
3. For chemical-resistant furan grouts, comply with ANSI A108.8.

3.4 WALL TILE INSTALLATION

A. Install types of tile designated for wall installations to comply with requirements in the Wall Tile Installation Schedule, including those referencing TCA installation methods and ANSI setting-bed standards.

B. Install metal lath and scratch coat for walls to comply with ANSI A108.1A, Section 4.1.

C. Joint Widths: Install tile on walls with the following joint widths:

1. Ceramic Mosaic Tile: 1/16 inch (1.6 mm).

2. Porcelain Tile: 1/8”.

3.5 CLEANING AND PROTECTING

A. Cleaning: On completion of placement and grouting, clean all ceramic tile surfaces so they are free of foreign matter.

1. Remove latex-portland cement grout residue from tile as soon as possible.
2. Clean grout smears and haze from tile according to tile and grout manufacturer's written instructions, but no sooner than 10 days after installation. Use only cleaners recommended by tile and grout manufacturers and only after determining that cleaners are safe to use by testing on samples of tile and other surfaces to be cleaned. Protect metal surfaces and plumbing fixtures from effects of cleaning. Flush surfaces with clean water before and after cleaning.
3. Remove temporary protective coating by method recommended by coating manufacturer that is acceptable to tile and grout manufacturer. Trap and remove coating to prevent it from clogging drains.

B. When recommended by tile manufacturer, apply coat of neutral protective cleaner to completed tile walls and floors. Protect installed tile work with kraft paper or other heavy covering during construction period to prevent staining, damage, and wear.

C. Prohibit foot and wheel traffic from tiled floors for at least seven days after grouting is completed.

NOT FOR BIDDING PURPOSES

D. Before final inspection, remove protective coverings and rinse neutral cleaner from tile surfaces.

3.6 WALL TILE INSTALLATION SCHEDULE

A. Tile Installation: Interior wall installation over gypsum board; thin-set mortar; TCA W243 and ANSI A108.5.

1. Tile Type: Ceramic, Porcelain.
2. Thin-Set Mortar: Latex-portland cement mortar.
3. Grout: Water Based urethane grout.

END OF SECTION 093000

NOT FOR BIDDING PURPOSES

NOT FOR BIDDING PURPOSES

SECTION 09 51 13

ACOUSTICAL PANEL CEILINGS

PART 1 - GENERAL

1.1 RELATED DOCUMENTS

A. Drawings and general provisions of the Contract, including General and Supplementary Conditions and Division 01 Specification Sections, apply to this Section.

1.2 SUMMARY

A. Section includes acoustical panels and exposed suspension systems for ceilings.

B. Products furnished, but not installed under this Section, include anchors, clips, and other ceiling attachment devices to be cast in concrete.

1.3 PREINSTALLATION MEETINGS

A. Preinstallation Conference: Conduct conference at Project site.

1.4 ACTION SUBMITTALS

A. Submittals and samples must be issued within 90 days of the start of construction.

B. Product Data: For each type of product.

C. Samples: For each exposed product and for each color and texture specified, 6 inches in size.

D. Samples for Verification: For each component indicated and for each exposed finish required, prepared on Samples of size indicated below.

1. Acoustical Panel: Set of 6-inch-square Samples of each type, color, pattern, and texture.
2. Exposed Suspension-System Members, Moldings, and Trim: Set of 6-inch-long Samples of each type, finish, and color.

1.5 INFORMATIONAL SUBMITTALS

A. Coordination Drawings: Reflected ceiling plans, drawn to scale, on which the following items are shown and coordinated with each other, using input from installers of the items involved:

1. Suspended ceiling components.
2. Structural members to which suspension systems will be attached.
3. Size and location of initial access modules for acoustical panels.
4. Items penetrating finished ceiling including the following:
   a. Lighting fixtures.
   b. Air outlets and inlets.
   c. Speakers.
   d. Sprinklers.

e. Access panels.

5. Perimeter moldings.

A. Qualification Data: For testing agency.

C. Product Test Reports: For each acoustical panel ceiling, for tests performed by a qualified testing agency.

D. Evaluation Reports: For each acoustical panel ceiling suspension system and anchor and fastener type, from ICC-ES.

1.6 CLOSEOUT SUBMITTALS

A. Maintenance Data: For finishes to include in maintenance manuals.

1.7 MAINTENANCE MATERIAL SUBMITTALS

A. Furnish extra materials that match products installed and that are packaged with protective covering for storage and identified with labels describing contents.

1. Acoustical Ceiling Panels: Provide four standard cartons of each type acoustic units to Owner, upon substantial completion.
2. Suspension-System Components: Quantity of each exposed component equal to 2 percent of quantity installed.
3. Hold-Down Clips: Equal to 2 percent of quantity installed.
4. Impact Clips: Equal to 2 percent of quantity installed.

1.8 QUALITY ASSURANCE

A. Mockups: Build mockups to verify selections made under sample submittals and to demonstrate aesthetic effects and set quality standards for materials and execution.

1. Build mockup of typical ceiling area as shown on Drawings.
2. Approval of mockups does not constitute approval of deviations from the Contract Documents contained in mockups unless Architect specifically approves such deviations in writing.
3. Subject to compliance with requirements, approved mockups may become part of the completed Work if undisturbed at time of Substantial Completion.

1.9 DELIVERY, STORAGE, AND HANDLING

A. Deliver acoustical panels, suspension-system components, and accessories to Project site in original, unopened packages and store them in a fully enclosed, conditioned space where they will be protected against damage from moisture, humidity, temperature extremes, direct sunlight, surface contamination, and other causes.

B. Before installing acoustical panels, permit them to reach room temperature and a stabilized moisture content.

1.10 FIELD CONDITIONS

A. Environmental Limitations: Do not install acoustical panel ceilings until spaces are enclosed and weatherproof,

NOT FOR BIDDING PURPOSES

wet work in spaces is complete and dry, work above ceilings is complete, and ambient temperature and humidity conditions are maintained at the levels indicated for Project when occupied for its intended use.

1. Pressurized Plenums: Operate ventilation system for not less than 48 hours before beginning acoustical panel ceiling installation.

PART 2 - PRODUCTS

2.1 PERFORMANCE REQUIREMENTS

A. Surface-Burning Characteristics: Comply with ASTM E 84; testing by a qualified testing agency. Identify products with appropriate markings of applicable testing agency.

1. Flame-Spread Index: Comply with ASTM E 1264 for Class A materials.
2. Smoke-Developed Index: 450 or less.

B. Fire-Resistance Ratings: Comply with ASTM E 119; testing by a qualified testing agency. Identify products with appropriate markings of applicable testing agency.

1. Indicate design designations from UL's "Fire Resistance Directory" or from the listings of another qualified testing agency.

2.2 ACOUSTICAL PANELS, GENERAL

A. Source Limitations:

1. Acoustical Ceiling Panel: Obtain each type from single source from single manufacturer.
2. Suspension System: Obtain each type from single source from single manufacturer.

B. Source Limitations: Obtain each type of acoustical ceiling panel and supporting suspension system from single source from single manufacturer.

C. Glass-Fiber-Based Panels: Made with binder containing no urea formaldehyde.

D. Acoustical Panel Standard: Provide manufacturer's standard panels of configuration indicated that comply with ASTM E 1264 classifications as designated by types, patterns, acoustical ratings, and light reflectances unless otherwise indicated.

1. Mounting Method for Measuring NRC: Type E-400; plenum mounting in which face of test specimen is 15-3/4 inches away from test surface according to ASTM E 795.

A. Acoustical Panel Colors and Patterns: Match appearance characteristics indicated for each product type.

1. Where appearance characteristics of acoustical panels are indicated by referencing pattern designations in ASTM E 1264 and not manufacturers' proprietary product designations, provide products selected by Architect from each manufacturer's full range that comply with requirements indicated for type, pattern, color, light reflectance, acoustical performance, edge detail, and size.

2.3 ACOUSTICAL PANELS: CT-01

A. Basis-of-Design Product: Subject to compliance with requirements, provide products by Armstrong World Industries, Inc; or a comparable product by one of the following:

NOT FOR BIDDING PURPOSES

1. CertainTeed Corporation.
2. Rockfon (Roxul Inc.).
3. USG Corporation.

B. Acoustical Panel Standard: Provide manufacturer's standard panels according to ASTM E 1264 and designated by type, form, pattern, acoustical rating, and light reflectance unless otherwise indicated.

C. Classification: Provide panels as follows:

1. Type and Form: Type III, mineral base with painted finish; Form 1, nodular or Form 2, water felted.
2. Pattern: CE (perforated, small holes and lightly textured)
3. Sizes: Refer to Section 090600.

D. Refer to Section 090600 for item numbers, descriptions, and colors.

2.4 ACOUSTICAL PANELS: CT-03

A. Basis-of-Design Product: Subject to compliance with requirements, provide products by Nudo; or a comparable product by one of the following:

1. Armstrong World Industries, Inc.
2. CertainTeed Corporation.
3. Rockfon (Roxul Inc.).
4. USG Corporation.

B. FRP-Faced Gypsum Panel Materials:

1. Type ACT-5 FRP-Faced Gypsum Ceiling Panels

a. Size: 24” x 48” x 1/2”, unless otherwise indicated on the Drawings.
b. Composition: 0.030 Class A flame spread fiberglass-reinforced plastic (FRP) laminated to fire-rated, moisture-resistant gypsum panel.
c. Face Finish: White textured FRP.
d. Edge: Square-cut for lay-in.

C. FRP-Faced Gypsum Ceiling Panels shall be warranted by manufacturer for 10 years against delamination.

D. Refer to Section 090600 for descriptions and colors.

2.5 METAL SUSPENSION SYSTEMS, GENERAL

A. Metal Suspension-System Standard: Provide manufacturer's standard direct-hung metal suspension systems of types, structural classifications, and finishes indicated that comply with applicable requirements in ASTM C 635/C 635M.

B. Attachment Devices: Size for five times the design load indicated in ASTM C 635/C 635M, Table 1, "Direct Hung," unless otherwise indicated. Comply with seismic design requirements.

C. Wire Hangers, Braces, and Ties: Provide wires complying with the following requirements:

1. Zinc-Coated, Carbon-Steel Wire: ASTM A 641/A 641M, Class 1 zinc coating, soft temper.
2. Size: Select wire diameter so its stress at three times hanger design load (ASTM C 635/C 635M, Table 1,

NOT FOR BIDDING PURPOSES

"Direct Hung") will be less than yield stress of wire, but provide not less than 0.106-inchdiameter wire.

D. Angle Hangers: Angles with legs not less than 7/8-inch-wide; formed with 0.04-inch-thick, galvanized-steel sheet complying with ASTM A 653/A 653M, G90 coating designation; with bolted connections and 5/16-inch-diameter bolts.

E. Stabilizer Bars: Manufacturer's standard perimeter stabilizers.

2.6 METAL SUSPENSION SYSTEM

A. Basis-of-Design Product: Subject to compliance with requirements, provide products by Armstrong World Industries, Inc; or a comparable product by one of the following:

1. CertainTeed Corporation.
2. Rockfon (Roxul Inc.).
3. USG Corporation.

B. Metal Suspension-System Standard: Provide manufacturer's standard, direct-hung, metal suspension system and accessories according to ASTM C 635/C 635M and designated by type, structural classification, and finish indicated.

C. Wide-Face, Capped, Double-Web, Steel Suspension System: Main and cross runners roll formed from cold-rolled steel sheet; prepainted, electrolytically zinc coated, or hot-dip galvanized, G30 coating designation; with prefinished 15/16-inch-wide metal caps on flanges.

1. Structural Classification: Heavy-duty system.
2. End Condition of Cross Runners: Override (stepped) or butt-edge type.
3. Face Design: Flat, flush.
4. Cap Material: Aluminum.
5. Cap Finish: Painted white

D. Provide 15/16 inch in Calla Collorations color to match ceiling Calla Colorations.

2.7 METAL EDGE MOLDINGS AND TRIM

A. Manufacturers: Subject to compliance with requirements, available manufacturers offering products that may be incorporated into the Work include, but are not limited to the following:

1. Armstrong World Industries, Inc.
2. CertainTeed Corporation.
3. Chicago Metallic Corporation.
4. Fry Reglet Corporation.
5. Gordon, Inc.
6. USG Corporation.

B. Roll-Formed, Sheet-Metal Edge Moldings and Trim: Type and profile indicated or, if not indicated, manufacturer's standard moldings for edges and penetrations that comply with seismic design requirements; formed from sheet metal of same material, finish, and color as that used for exposed flanges of suspension-system runners.

1. Provide manufacturer's standard edge moldings that fit acoustical panel edge details and suspension systems

NOT FOR BIDDING PURPOSES

indicated and that match width and configuration of exposed runners unless otherwise indicated.

2. For lay-in panels with reveal edge details, provide stepped edge molding that forms reveal of same depth and width as that formed between edge of panel and flange at exposed suspension member.

C. Extruded-Aluminum Edge Moldings and Trim: Where indicated, provide manufacturer's extruded-aluminum edge moldings and trim of profile indicated or referenced by manufacturer's designations, including splice plates, corner pieces, and attachment and other clips, complying with seismic design requirements and the following:

1. Baked-Enamel or Powder-Coat Finish: Minimum dry film thickness of 1.5 mils. Comply with ASTM C 635/C 635M and coating manufacturer's written instructions for cleaning, conversion coating, and applying and baking finish.

PART 3 - EXECUTION

3.1 EXAMINATION

A. Examine substrates, areas, and conditions, including structural framing to which acoustical panel ceilings attach or abut, with Installer present, for compliance with requirements specified in this and other Sections that affect ceiling installation and anchorage and with requirements for installation tolerances and other conditions affecting performance of acoustical panel ceilings.

B. Examine acoustical panels before installation. Reject acoustical panels that are wet, moisture damaged, or mold damaged.

C. Proceed with installation only after unsatisfactory conditions have been corrected.

3.2 PREPARATION

A. Measure each ceiling area and establish layout of acoustical panels to balance border widths at opposite edges of each ceiling. Avoid using less-than-half-width panels at borders, and comply with layout shown on reflected ceiling plans.

B. Layout openings for penetrations centered on the penetrating items.

3.3 INSTALLATION

A. Install acoustical panel ceilings according to ASTM C 636/C 636M and manufacturer's written instructions.

1. Fire-Rated Assembly: Install fire-rated ceiling systems according to tested fire-rated design.

B. Suspend ceiling hangers from building's structural members and as follows:

1. Install hangers plumb and free from contact with insulation or other objects within ceiling plenum that are not part of supporting structure or of ceiling suspension system.
2. Splay hangers only where required and, if permitted with fire-resistance-rated ceilings, to miss obstructions; offset resulting horizontal forces by bracing, countersplaying, or other equally effective means.
3. Where width of ducts and other construction within ceiling plenum produces hanger spacings that interfere with location of hangers at spacings required to support standard suspension-system members, install supplemental suspension members and hangers in form of trapezes or equivalent devices.
4. Secure wire hangers to ceiling-suspension members and to supports above with a minimum of three tight turns.

NOT FOR BIDDING PURPOSES

Connect hangers directly either to structures or to inserts, eye screws, or other devices that are secure and appropriate for substrate and that will not deteriorate or otherwise fail due to age, corrosion, or elevated temperatures.

5. Secure flat, angle, channel, and rod hangers to structure, including intermediate framing members, by attaching to inserts, eye screws, or other devices that are secure and appropriate for both the structure to which hangers are attached and the type of hanger involved. Install hangers in a manner that will not cause them to deteriorate or fail due to age, corrosion, or elevated temperatures.
6. Do not support ceilings directly from permanent metal forms or floor deck. Fasten hangers to castin-place hanger inserts, postinstalled mechanical or adhesive anchors, or power-actuated fasteners that extend through forms into concrete.
7. When steel framing does not permit installation of hanger wires at spacing required, install carrying channels or other supplemental support for attachment of hanger wires.
8. Do not attach hangers to steel deck tabs.
9. Do not attach hangers to steel roof deck. Attach hangers to structural members.
10. Space hangers not more than 48 inches o.c. along each member supported directly from hangers unless otherwise indicated; provide hangers not more than 8 inches from ends of each member.
11. Size supplemental suspension members and hangers to support ceiling loads within performance limits established by referenced standards and publications.

C. Secure bracing wires to ceiling suspension members and to supports with a minimum of four tight turns. Suspend bracing from building's structural members as required for hangers, without attaching to permanent metal forms, steel deck, or steel deck tabs. Fasten bracing wires into concrete with cast-inplace or postinstalled anchors.

D. Install edge moldings and trim of type indicated at perimeter of acoustical ceiling area and where necessary to conceal edges of acoustical panels.

1. Screw attach moldings to substrate at intervals not more than 16 inches o.c. and not more than 3 inches from ends, leveling with ceiling suspension system to a tolerance of 1/8 inch in 12 feet. Miter corners accurately and connect securely.
2. Do not use exposed fasteners, including pop rivets, on moldings and trim unless approved by Architect.

E. Install suspension-system runners so they are square and securely interlocked with one another. Remove and replace dented, bent, or kinked members.

F. Install acoustical panels with undamaged edges and fit accurately into suspension-system runners and edge moldings. Scribe and cut panels at borders and penetrations to provide a neat, precise fit.

1. Arrange directionally patterned acoustical panels as follows:

   a. As indicated on reflected ceiling plans.

2. For square-edged panels, install panels with edges fully hidden from view by flanges of suspension-system runners and moldings.
3. For reveal-edged panels on suspension-system runners, install panels with bottom of reveal in firm contact with top surface of runner flanges.
4. Paint cut edges of panel remaining exposed after installation; match color of exposed panel surfaces using coating recommended in writing for this purpose by acoustical panel manufacturer.
5. Install hold-down and impact clips in areas indicated; space according to panel manufacturer's written instructions unless otherwise indicated.

   a. Hold-Down Clips: Space 24 inches on all cross runners.

NOT FOR BIDDING PURPOSES

6. Protect lighting fixtures and air ducts to comply with requirements indicated for fire resistance-rated assembly.

3.4 CLEANING

A. Clean exposed surfaces of acoustical panel ceilings, including trim, edge moldings, and suspension-system members. Comply with manufacturer's written instructions for cleaning and touchup of minor finish damage.

B. Remove and replace ceiling components that cannot be successfully cleaned and repaired to permanently eliminate evidence of damage.

END OF SECTION 09 51 13

NOT FOR BIDDING PURPOSES

NOT FOR BIDDING PURPOSES

SECTION 09 64 29 – WOOD STRIP FLOORING

PART 1 – GENERAL

1.1 SECTION INCLUDES

A. Wood strip flooring, nailed.
   1. Athletic wood floor at gymnasium. (AWD – 1)
   2. Wood strip flooring at Cafetorium stage (WF-1)

B. Secondary subflooring.

C. Sleepers on cushion blocks.

D. Sheet vapor retarder.

E. Wall base.

F. Surface finishing and game markings.

G. Protective covering.

1.2 RELATED REQUIREMENTS

A. Section 03 3000-Concrete: Recessed concrete subfloor surface and formed depressions for deep floor sockets, inserts, and installation of vapor barrier.

B. Section 07 2616-Under-slab Vapor Barrier: Vapor barrier material installed below concrete slab.

1.3 REFERENCE STANDARDS

A. MFMA (SPEC) - Guide Specifications for Maple Flooring Systems; Maple Flooring Manufacturers Association; current edition.

B. ASTM E 96 - Standard Test Methods for Water Vapor Transmission of Materials

C. APA - Plywood product standards; Plywood design specification; Plywood as a resilient floor underlayment; Steps to construct a solid, squeak-free floor system;

D. MFMA - Floor Finish List and Specifications

E. MFMA - Grading Rules

F. WSFI - Recommendations for the Correct Preparation, Finishing, and Testing of Concrete Subfloor Surfaces to Receive Wood Flooring.

1.4 SUBMITTALS

A. Submit the following for approval prior to placing materials orders, any fabrication, or installation:
   1. Manufacturer's product data sheets, specifications, performance data for each type of wood flooring and finish system materials, with manufacturer's installation instructions and recommended maintenance procedures.

2. Wood flooring and finish system manufacturers' standard written guarantees covering defects in materials and workmanship, clearly defining the terms included in the coverage.
3. Submit 1 electronic copy of shop drawings for review. Shop drawings shall be revised and resubmitted as required.

B. Shop drawings shall include the following:
1. Measured plan drawing indicating all critical dimensions. Field verify all dimensions prior to installation.
2. Measured plan indicating placement of sleepers and staggering of substrate and surface layers as related to sleeper placement.
3. Section showing base, and section showing transitions with abutting flooring materials.
4. Details indicating expansion provisions.
5. Indicate location, size, design, and color of game markings.

C. Construction sample: Provide a finished 24 by 24 inch section of completed flooring utilizing actual system, demonstrating actual materials and finish coats.
1. Submit one sample for each type of finish and alternate finish specified, for final selection.

D. Installation Instructions: Indicate standard and special installation procedures.

E. Maintenance Data: At the completion of the installer's work, provide 3 copies of a maintenance data binder. Binders shall include manufacturer's product data for all materials used in the floor construction and finishing, manufacturer's recommended maintenance procedures, and recommended maintenance materials. Materials shall be provided in printed and electronic (PDF) versions and bound in a three-ring binder and adequately labeled. Provide the electronic copies on thumb drives.

1.5 QUALITY ASSURANCE

A. Perform work of this section in accordance with MFMA (SPEC).

B. Manufacturer Qualifications: Company specializing in manufacturing products specified in this section with minimum three years documented experience.

C. Installer qualifications:
1. An experienced installer who has completed stage/athletic flooring similar in material, design, and extent to that indicated for this Project and whose work has resulted in flooring installations with a record of successful in-service performance.
2. Installer should cite references with contact information from previous stage/athletic flooring installations.
3. Installer specializing in applying the work of this Section with a minimum of 5 years documented experience of the type of flooring system specified.
4. Installer shall perform work in accordance with APA and MFMA standards.
5. Installer shall submit qualifications with bid materials. Bids without qualifications will not be accepted.

D. Single Subcontractor Responsibility: Subcontract entire floor system to a single firm for undivided responsibility. Obtain flooring of each type from single manufacturer or source, to ensure match of color, pattern, texture and quality.

NOT FOR BIDDING PURPOSES

1.6 FIELD CONDITIONS

A. Do not install wood flooring until wet construction work is complete and ambient air at installation space has moisture content stabilized at maximum moisture content of 40 percent.
B. Provide heat, light, and ventilation prior to installation.
C. Store materials in area of installation for minimum period of 24 hours prior to installation.
D. Maintain minimum room temperature of 65 degrees F for a period of two days prior to delivery of materials to installation space, during installation, and after installation.

PART 2 - PRODUCTS

2.1 FLOOR SYSTEMS

A. Manufacturers: Subject to compliance with the requirements specified herein, manufacturers offering products which may be incorporated in the work include the following:
   1. Robbins, Inc., Wausau, WI, “Bio-Channel Classic”
   2. Horner Flooring Company, Inc., Dollar Bay, MI, “Multi-Purpose Channel”, “low profile” version
   3. Aacer Sports Flooring, Peshtigo, WI, “Anchored Power Sleeper SE”
B. Gymnasium and Stage Flooring:
   1. Strip Flooring
      a. Northern hard maple, 2-1/4” (57mm) width x 25/32” (20mm) thick, 2nd & Better, T&G and end matched, kiln dried.
      b. Preservative treatment: Clear, penetrating, water-repellant wood preservative that protects against mold, mildew, stainingand decay fungi; complying with MFMA's written recommendations and applied by imersion.
   2. Subfloor:
      a. Engineered-wood sleeper with 7/16” (11mm) EPDM Bio-Pads attached, factory encased in a steel channel.
      b. 23/32” (18mm) structural rated sheathing, exposure 1 (CD-X).
   3. Channels: Manufacturer's standard for product designation above.
   4. Channel Anchors: Manufacturer's standard, min. 900 lb. pull-out.
   5. Perimeter Base - 3” x 4” (76mm x 99mm) ventilating type.
   6. Finishing Materials
      a. Oil modified polyurethane sealer and finish.
      b. Gameline paint at gymnasium shall be recommended by the finishing materials manufacturer and be compatible with the finish.

2.2 ACCESSORIES

A. Wall base: Steel angle base, 4 by 4 inches. Base shall be securely attached to wall to withstand an upwards load of 50 pounds per linear foot. A gap between the base and the wall shall be maintained at one-quarter of an inch by bushings to allow for venting.

NOT FOR BIDDING PURPOSES

B. Expansion Strip: Serviced Products neoprene rubber, produced and recommended for this use. Material shall be firm enough to resist abuse and compression, but suitably compressible to permit floor expansion. Provide continuously full depth of floor and subfloor at juncture of floor to vertical surface not covered by base or threshold.

C. Shim Strips:
   1. Plywood or hardwood shim strips. Thickness as required to achieve overall system thickness and levelness. Type as recommended by manufacturer.
   2. If required buildup is less than 2", resilient channel shall be anchored to the concrete through the shims.
   3. If required buildup exceeds 2", shims shall be anchored to the concrete independently from resilient channel and channel shall be attached to shims using a #14 deck screw, or as recommended by the manufacturer. Shims shall be 4 inches by 4 inches minimum.

D. Filler for patching, smoothing and leveling subfloors and underlayment: Portland cement-based latex underlayment acceptable to flooring manufacturer, equal to the following:
   1. Ardex, Inc., products "Feather Flash" and "Ardex SD-P".
   2. Quikrete Companies, product "Fast-Set Underlayment 1248".
   3. Silpro Masonry Systems Inc., product "Masco Latex Cement".

PART 3 – EXECUTION

3.1 EXAMINATION

A. Verify concrete substrate has cured for at least 60 days. Test concrete with 3 percent solution of phenolphtalein in grain alcohol for dryness. Do not proceed with installation until substrate passes dryness test, immediately notify Architect of unacceptable substrate conditions.

B. Verify that permanent heat, light, and ventilation is complete and operational prior to installation.

C. Inspect all substrate surfaces and verify that they are in proper condition to receive the work of this Section. Verify that concrete substrate surfaces are smooth and flat to plus or minus 1/8 inch over a radius of 10 feet, free of scaling, oil, grease, dust, and foreign substance.

D. All discrepancies shall be reported in writing.

E. Commencement of installation means acceptance of site conditions by the installer.

3.2 PREPARATION

A. Comply with flooring manufacturer's requirements for preparation of substrate to receive wood flooring.

B. Remove sub-floor ridges and bumps. Fill minor or local low spots, cracks, joints, holes, and other defects with subfloor filler to achieve smooth, flat, hard surface. Prohibit traffic until filler is cured.

C. Thoroughly vacuum clean all receiving surfaces before commencing installation work.

D. Open bundles of flooring, and permit the pieces to properly acclimatize prior to installing same.

NOT FOR BIDDING PURPOSES

3.3 SLEEPER INSTALLATION

A. Install in accordance with manufacturer's instructions.

B. Install polyethylene vapor barrier with joints lapped a minimum of 6 inches.

C. Place resilient sleepers 16 inches on center, end to end, staggering end joints in adjacent rows. Anchor channels at predetermined locations using power actuated or pneumatic anchoring methods. Sleepers will be placed perpendicular to the proscenium opening or the intended direction of the hardboard, where applicable.

D. Install acoustical insulation between sleeper channels and at expansion voids as shown on architectural plans.

E. Install first layer of plywood subfloor with 4-foot edges parallel to sleeper channels and secure 6 inches on center into channel sleepers. The ends of the sheets shall land on sleepers. Install second layer of plywood subfloor at 90 degrees to first layer.

F. Install plywood with a 1/16" gap on non-grooved sides and 1/8" gap on grooved sides, between sheets to allow for expansion of the material.

G. Sheathing Paper: Place over wood subfloor; lap edges and ends 2 inches, staple in place.

3.4 WOOD STRIP FLOORING INSTALLATION:

A. Install in accordance with manufacturer's, MFMA, and NOFMA instructions; predrill and blind nail to sleepers.

B. Lay flooring parallel to length of room areas. Verify alignment as work progresses.

C. Arrange flooring with end matched grain set flush and tight.

D. Terminate flooring at centerline of door openings where adjacent floor finish is dissimilar; provide divider strips and transition strips in accordance with flooring manufacturer's recommendations and as indicated..

E. Install edge strips at unprotected or exposed edges, and where flooring terminates.

F. Secure edge strips before installation of flooring with stainless steel screws.

G. Install flooring tight to floor access covers.

H. Provide 2 inch expansion space at fixed walls and other interruptions.

I. Finishing:
   1. Mask off adjacent surfaces before beginning sanding.
   2. Sand flooring to smooth even finish with no evidence of sander marks. Take precautions to contain dust. Remove dust by vacuum.
   3. Apply finish in accordance with floor finish manufacturer's instructions.
   4. Apply filler and three finish coats.
   5. Apply first coat, allow to dry, then buff lightly with steel wool to remove irregularities. Vacuum clean and wipe with damp cloth before applying succeeding coat.
   6. Lightly buff between coats with steel wool and vacuum clean before applying succeeding coat.
   7. Apply colored game lines 2 inches wide to layout indicated on drawings at gymnasium.
   8. Apply last coat of finish.

NOT FOR BIDDING PURPOSES

3.5 CLEANING

A. Clean and polish floor surfaces in accordance with manufacturer's instructions.

3.6 PROTECTION

A. Prohibit traffic on floor finish for 5 days after installation.

B. Place protective coverings over finished floors; do not remove coverings until Substantial Completion.

1. Protect flooring against damage and wear with red rosin paper with taped joints during remainder of construction period to ensure that flooring and finish are without damage or deterioration at time of substantial completion.

3.7 OWNER'S ACCEPTANCE

A. The Owner will accept the work in this Section upon the satisfactory completion of all punch list items.

B. Prior to final acceptance, the Owner reserves the right to use any completed portion of the work in this Section at no additional cost, unless said use poses a potential hazard to personnel or risks damage to the work in this Section or the work of others.

C. The Warranty period shall commence upon final acceptance by the Owner.

3.8 SCHEDULES

A. Gymnasium: Northern maple, random length strip, staggered joint, fastened to two layers of plywood subflooring, nailed to cushioned sleepers, anchored to resilient clips over vapor retarder, over concrete subfloor, three coat urethane finish with colored game lines.

B. Stage:

1. Front Stage: White maple, random length strip, staggered joint, fastened to two layers of plywood subflooring, nailed to sleepers, three coat urethane finish.

END SECTION 09 64 29

NOT FOR BIDDING PURPOSES

NOT FOR BIDDING PURPOSES

SECTION 09 65 00 - RESILIENT FLOORING

PART 1 - GENERAL

1.1 DESCRIPTION OF WORK

A. Provide all labor, materials, accessories, equipment and incidentals to complete Resilient Flooring work, as shown and/or specified, including but not necessarily limited to the following:

1. Resilient tile flooring.
2. Luxury Vinyl Tile.
3. Installation Accessories.

1.2 RELATED DOCUMENTS

A. Drawings and general provisions of the Contract, including General and Supplementary Conditions and Division 01 Specification Sections, apply to this Section.

1.3 QUALITY ASSURANCE

A. Installer Qualifications: Engage an experienced installer to perform work of this Section who has specialized in installing resilient floor coverings of the type(s) required for this Project and with a record of successful in-service performance and who is certified or approved by the flooring manufacturer.

B. Source Limitations: Obtain each type, color, and pattern of each type of resilient flooring product specified from one source for each resilient floor covering product with resources to provide products of consistent quality in appearance and physical properties without delaying the Work.

C. Fire Test Performance: Provide resilient flooring products and accessories that comply with the following fire performance characteristics as determined by testing products per ASTM test method indicated below by UL or another testing and inspecting agency acceptable to authorities having jurisdiction.

1. Critical Radiant Flux: Class II, Not less than 0.22 watts per sq. cm when tested in conformance with ASTM E 648.

2. Smoke Density: Less than 450 in conformance with ASTM E 662.

3. Static Coefficient of Friction: Greater than 0.6 for level surfaces and greater than 0.8 for ramped surfaces in accordance with ASTM D 2047.

1.4 SUBMITTALS

A. Product data: Submit manufacturer's product data, installation instructions, and maintenance recommendations for each type of product specified.

B. Shop Drawings: Show layout of special tile, (sheet), special patterns, logos, details and color coding for verification of correct color and pattern locations coordinated with layout on Architectural drawings. Show locations of seams, expansion joints, edges, columns, doorways, enclosing partitions, built-in furniture, cabinets, and cutouts.

C. Samples for selection purposes of each type of flooring, base and accessory consisting of actual tiles or 6-by-9 inch sections showing full range of colors and patterns available for each type of product indicated for approval and color selection.

D. Certification by manufacturer of each type of resilient flooring product that products provided for resilient flooring installation comply with local regulations controlling use of volatile organic compounds (VOC's).

E. Installer Certificates: Signed by the certifying that installers comply with specified requirements.

F. Maintenance Data: Submit three copies of manufacturer's recommended maintenance practices for each type of resilient flooring product and accessory required.

1.5 DELIVERY, STORAGE AND HANDLING

A. Deliver resilient flooring and accessory products and installation accessories to the Project site in manufacturer's original unopened cartons and containers each bearing names of product and manufacturer, Project identification, and shipping and handling instructions.

B. Store and handle materials in strict compliance with manufacturer's recommendations.

C. Store materials in dry spaces protected from the weather with ambient temperatures maintained between 50 deg F (10 deg C) and 90 deg F (32 deg C) or as otherwise recommended by the manufacturer. Store tiles on flat surfaces. Store rolls upright.

D. Move resilient products and installation accessories into spaces where they will be installed at least 72 hours in advance of installation.

E. Deliver Materials sufficiently in advance of installation to condition materials to room temperature prior to installation.

1.6 FIELD CONDITIONS

A. Maintain temperature of not less than 70 deg F (21 deg C) or more than 95 deg F (35 deg C) in spaces to receive resilient flooring products for at least 72 hours prior to installation, during installation, and for not less than 72 hours after installation. Subsequently, maintain a temperature of not less than 55 deg F (13 deg C) or more than 95 deg F (35 deg C) in areas where work is completed.

B. Do not install resilient flooring materials and accessories until they are at the same temperature as the space where they are to be installed.

NOT FOR BIDDING PURPOSES

C. Maintain relative humidity in spaces to receive resilient flooring products and accessories before, during, and after installation within the range recommended in writing by manufacturer.

D. Close spaces to traffic during flooring installation and for time period after installation recommended in writing by manufacturer.

E. Install resilient flooring and accessories after other finishing operations, including painting and ceiling operations, have been completed. Moisture content of concrete slabs and environmental conditions must be within limits recommended by manufacturer of products being installed for sufficient bonding with adhesives as determined by moisture tests.

1.7 EXTRA MATERIALS

A. Deliver additional stock to Owner. Furnish additional materials matching products installed, packaged with protective covering for storage and identified with labels clearly describing contents. Furnish not less than one box for each 50 boxes or fraction thereof, of each type, color, pattern class, wearing surface and size of each resilient tile flooring item installed. Furnish not less than 10 linear feet (3 linear m) in roll form for each 500 linear feet (150 linear m) or fraction thereof, of each type, color, pattern, and size of resilient accessory installed.

PART 2 - PRODUCTS

2.1 TILE FLOORING

A. Manufacturers:
1. Basis of design product: Subject to compliance with requirements; provide the basis of the design product as listed below or a comparable product by one of the following:
   a. Mannington Commercial
   b. Approved Equal

B. Vinyl Enhanced Tile Types: VT-1, VT-2, VT-3, VT-4, VT-5, VT-6, VT-7, VT-8, VT-9:
1. Basis of design product: Subject to compliance with requirements. Provide Tarkett Azrock – Color Essence or an approved equal as listed below.
2. Complies with requirements for ASTM F 1066, Class 3 (Surface Pattern) Standard Specifications for Vinyl Composition Floor Tile.
3. Wear layer / overall thickness: 1/8” (3.2 mm).
4. Tile size 12” x 12” (30.5 x 30.5 cm).
5. Slip Resistant: ADA Compliant.
6. Colors:
   a. VT-1: CE105 Hubcap
   b. VT-2: CE131 Thunderstruck
   c. VT-3: CE141 Candy Corn
   d. VT-4: CE142 Red Hot
   e. VT-5: CE 140 Mariner
   f. VT-6: CE125 What a Moss
   g. VT-7: CE143 Grape
   h. VT-8: CE146 Fizz
   i. VT-9: CE152 Light’s Out

NOT FOR BIDDING PURPOSES

C. Luxury Vinyl Tile: LVT-1, LVT-2: Printed film type, with transparent or translucent wear layer.
   1. Basis of design product: Subject to compliance with requirements. Provide Armstrong – Natural Creations Classics or an approved equal as listed below:
   2. Thickness: 0.125”
   3. Wear Layer: 0.020”
   4. Complies with ASTM F 1700, Class III, Type B, Embossed Surface.
   5. Size: 6” x 48”
   6. Colors
      a. LVT-1: TPU41 Nouveau Maple Light Natural
      b. LVT-2: TP111 Kennesaw Oak Woodstock

D. Luxury Vinyl Tile: LVT-3, LVT-4: Printed film type, with transparent or translucent wear layer.
   1. Basis of design product: Subject to compliance with requirements. Provide Armstrong Natural Creations Diamond 10 Technology Mystix or an approved equal as listed below:
   2. Thickness: 0.125”
   3. Wear Layer: 0.020”
   4. Complies with ASTM F 1700, Class III, Type B, Embossed Surface.
   5. Size: 6” x 36”
   6. Colors:
      a. LVT-3: NA616 Mixer Pineapple Juice
      b. LVT-4: NA627 Mixer Black Tea

E. Luxury Vinyl Tile: LVT-5
   1. Product: Shaw, Level Hexagon 0551V
   2. Thickness: 0.157”
   3. Wear Layer: 0.020”
   4. Complies with ASTM F 1700, Class III, Type B, Embossed Surface.
   5. Size: 28” x 24”
   6. Color: LVT-5: 51518 Exact

END OF SECTION 09 65 00

NOT FOR BIDDING PURPOSES

NOT FOR BIDDING PURPOSES

SECTION 09 65 13 - RESILIENT BASE AND ACCESSORIES

PART 1 - GENERAL

1.1 RELATED DOCUMENTS

A. Drawings and general provisions of the Contract, including General and Supplementary Conditions and Division 01 Specification Sections, apply to this Section.

1.2 SUMMARY

A. Section Includes:

1. Resilient base.

1.3 ACTION SUBMITTALS

A. Product Data: For each type of product, including manufacturer color selection sheet (photo copies not acceptable)

B. Samples for Verification: For each type of product indicated and for each color, texture, and pattern required in manufacturer's standard-size Samples, but not less than 12 inches (300 mm) long.

1.4 DELIVERY, STORAGE, AND HANDLING

A. Store resilient products and installation materials in dry spaces protected from the weather, with ambient temperatures maintained within range recommended by manufacturer, but not less than 50 deg F (10 deg C) or more than 90 deg F (32 deg C).

1.5 FIELD CONDITIONS

A. Maintain ambient temperatures within range recommended by manufacturer, but not less than 70 deg F (21 deg C)] or more than 95 deg F (35 deg C), in spaces to receive resilient products during the following time periods:

1. 48 hours before installation.
2. During installation.
3. 48 hours after installation.

B. After installation and until Substantial Completion, maintain ambient temperatures within range recommended by manufacturer, but not less than 55 deg. F (13 deg. C) or more than 95 deg F (35 deg C).

C. Install resilient products after other finishing operations, including painting, have been completed.

1.6 EXTRA MATERIALS

A. Furnish extra materials that match products installed and that are packaged with protective covering for storage and identified with labels describing contents.
   1. Furnish not less than 10 linear feet (3 linear m) for every 500 linear feet (150 linear m) or fraction thereof, of each type, color, pattern, and size of resilient product installed, in full unopened containers

PART 2 - PRODUCTS

2.1 THERMOPLASTIC-RUBBER BASE (RB-1 & RB-2)

A. Basis of Design:

Subject to compliance with requirements, provide Tarkett, Contour RWDC or available manufacturers offering products that may be incorporated into the Work include, but are not limited to, the following:
   1. Armstrong World Industries, Inc.
   2. Mondo Rubber International, Inc.
   3. Nora Systems, Inc.
   4. Roppe Corporation, USA.

B. Product Standard: ASTM F 1861, Type TP (rubber, thermoplastic).

   1. Group: I (solid, homogeneous)
   2. Style and Location:
      a. Style : Cove, Provide in areas as scheduled

C. Thickness: 0.125 inch (3.2 mm).

D. Height: 4’/4”.

E. Lengths: Cut lengths 48 inches (1219 mm) long or coils in manufacturer's standard length.

F. Outside Corners: Preformed.

G. Inside Corners: Job formed or preformed.

H. Colors:
   1. RB-1: 20 Charcoal
   2. RB-2: 38 Pewter

NOT FOR BIDDING PURPOSES

2.2 RUBBER BASE (MRB-1 & MRB-2)

A. Subject to compliance with requirements, provide Tarkett, Millwork, Reveal or available manufacturers offering products that may be incorporated into the Work include, but are not limited to, the following

B. Product Standard: Wall Base: ASTM F 1861.

C. Type (Material Requirement): TP (rubber, thermoplastic).

D. Group (Manufacturing Method): I (solid, homogeneous).

E. Style: Millwork Reveal unless noted otherwise.

F. Minimum Thickness: 0.125 inch.

G. Height: 4 ¼ ".

H. Lengths: Coils in manufacturer's standard length.

I. Outside Corners: Premolded.

J. Inside Corners: Premolded.

K. Surface: Smooth.

L. Color:
1. MRB-1: 20 Charcoal
2. MRB-2: 38 Pewter

2.3 RUBBER MOLDING ACCESSORY

A. Manufacturers: Subject to compliance with requirements, provide Tarkett available manufacturers offering products that may be incorporated into the Work include, but are not limited to, the following:

1. Armstrong World Industries, Inc.
2. Musson Rubber Company.
3. Roppe Corporation, USA.

B. Description: reducer and transition strips

C. Profile and Dimensions: As required to accommodate field conditions.

D. Locations: At changes in materials or finish flooring heights or as shown on drawings.

E. Colors and Patterns: As selected by Architect from full range of industry colors.

NOT FOR BIDDING PURPOSES

2.4 INSTALLATION MATERIALS

A. Trowelable Leveling and Patching Compounds: Latex-modified, portland cement based or blended hydraulic-cement-based formulation provided or approved by resilient-product manufacturer for applications indicated.

B. Adhesives: Water-resistant type recommended by resilient-product manufacturer for resilient products and substrate conditions indicated.

1. Adhesives shall have a VOC content of 50 g/L or less.

PART 3 - EXECUTION

3.1 EXAMINATION

A. Examine substrates, with Installer present, for compliance with requirements for maximum moisture content and other conditions affecting performance of the Work.

1. Verify that finishes of substrates comply with tolerances and other requirements specified in other Sections and that substrates are free of cracks, ridges, depressions, scale, and foreign deposits that might interfere with adhesion of resilient products.

B. Proceed with installation only after unsatisfactory conditions have been corrected.

1. Installation of resilient products indicates acceptance of surfaces and conditions.

3.2 PREPARATION

A. Prepare substrates according to manufacturer's written instructions to ensure adhesion of resilient products.

1. Verify that substrates are dry
2. Remove substrate coatings and other substances that are incompatible with adhesives and that contain soap, wax, oil, or silicone, using mechanical methods recommended by manufacturer. Do not use solvents.

B. Fill cracks, holes, and depressions in substrates remove bumps and ridges to produce a uniform and smooth substrate.

C. Do not install resilient products until they are the same temperature as the space where they are to be installed.

1. At least 48 hours in advance of installation, move resilient products and installation materials into spaces where they will be installed.

D. Immediately before installation, sweep and vacuum clean substrates to be covered by resilient products.

NOT FOR BIDDING PURPOSES

3.3 RESILIENT COVE BASE INSTALLATION

A. Comply with manufacturer's written instructions for installing resilient base.

B. Apply resilient base to walls, columns, pilasters, casework and cabinets in toe spaces, and other permanent fixtures in rooms and areas where base is required.

C. Install resilient base in lengths as long as practical without gaps at seams and with tops of adjacent pieces aligned.

D. Tightly adhere resilient base to substrate throughout length of each piece, with base in continuous contact with horizontal and vertical substrates.

E. Do not stretch resilient base during installation.

F. On masonry surfaces or other similar irregular substrates, fill voids along top edge of resilient base with manufacturer's recommended adhesive filler material.

G. Preformed Corners: Install preformed corners before installing straight pieces.

H. Job-Formed Corners:

1. Outside Corners less than or greater than 90 degrees: Use straight pieces of maximum lengths possible and form with returns not less than 3 inches (76 mm) in length.

   a. Form without producing discoloration (whitening) at bends.

2. Inside Corners: Use straight pieces of maximum lengths possible and form with returns not less than 3 inches (76 mm) inch length.

   a. Miter corners to minimize open joints.

3.4 RESILIENT ACCESSORY INSTALLATION

A. Comply with manufacturer's written instructions for installing resilient accessories.

B. Resilient Molding Accessories: Butt to adjacent materials and tightly adhere to substrates throughout length of each piece. Install reducer strips at edges of floor covering that would otherwise be exposed.

3.5 CLEANING AND PROTECTION

A. Comply with manufacturer's written instructions for cleaning and protecting resilient products.

B. Perform the following operations after completing resilient-product installation following manufacturer instructions:

1. Remove adhesive and other blemishes from exposed surfaces.
2. Sweep and vacuum horizontal surfaces thoroughly.
3. Damp-mop horizontal surfaces to remove marks and soil.

NOT FOR BIDDING PURPOSES

C. Protect resilient products from mars, marks, indentations, and other damage from construction operations and placement of equipment and fixtures during remainder of construction period.

END OF SECTION 09 65 13

NOT FOR BIDDING PURPOSES

SECTION 09 65 16 - RESILIENT SHEET FLOORING

PART 1 - GENERAL

1.1 RELATED DOCUMENTS

A. Drawings and general provisions of the Contract, including General and Supplementary Conditions and Division 01 Specification Sections, apply to this Section.

1.2 SUMMARY

A. Section includes vinyl sheet flooring.

1.3 ACTION SUBMITTALS

A. Product Data: For each type of product. Include manufacturer original color selection sheet (photo copies not acceptable)

B. Shop Drawings: For each type of flooring. Include flooring layouts, locations of seams, edges, columns, doorways, enclosing partitions, built-in furniture, cabinets, and cutouts.

1. Show details of special patterns.

C. Samples for Initial Selection: For each type of resilient sheet flooring indicated.

D. Samples for Verification: In manufacturer's standard size, but not less than 6-by-9-inch (150-by-230-mm) sections of each different color and pattern of resilient sheet flooring required.

1. For heat-welding bead, manufacturer's standard-size Samples, but not less than 9 inches (230 mm) long, of each color required.

E. Product Schedule: For resilient sheet flooring use same designations indicated on Drawings.

1.4 INFORMATIONAL SUBMITTALS

A. Qualification Data: For Installer.

1.5 CLOSEOUT SUBMITTALS

A. Maintenance Data: For each type of resilient sheet flooring to include in maintenance manuals.

NOT FOR BIDDING PURPOSES

1.6 QUALITY ASSURANCE

A. Installer Qualifications: A qualified installer who employs workers for this Project who are competent in techniques required by manufacturer for resilient sheet flooring installation and seaming method indicated.

1. Engage an installer who employs workers for this Project who are trained or certified by resilient sheet flooring manufacturer for installation techniques required.

1.7 DELIVERY, STORAGE, AND HANDLING

A. Store resilient sheet flooring and installation materials in dry spaces protected from the weather, with ambient temperatures maintained within range recommended by manufacturer, but not less than 50 deg F (10 deg C) or more than 90 deg F (32 deg C). Store rolls upright.

1.8 FIELD CONDITIONS

A. Maintain ambient temperatures within range recommended by manufacturer, but not less than 70 deg F (21 deg C) or more than 85 deg F (29 deg C) in spaces to receive resilient sheet flooring during the following time periods:

1. 48 hours before installation.
2. During installation.
3. 48 hours after installation.

B. After installation and until Substantial Completion, maintain ambient temperatures within range recommended by manufacturer, but not less than 55 deg. F (13 deg. C) or more than 95 deg. F (35 deg. C)>.

C. Close spaces to traffic during and for 48 hours after resilient sheet flooring installation.

D. Install resilient sheet flooring after other finishing operations, including painting, have been completed.

1.9 EXTRA MATERIALS

A. Furnish extra materials that match products installed and that are packaged with protective covering for storage and identified with labels describing contents.

B. Resilient Sheet Flooring: Furnish not less than 10 linear feet (3 linear m) for every [500 linear feet (150 linear m)]or fraction thereof, in roll form and in full roll width for each type, color, and pattern of flooring installed in full unopened containers

NOT FOR BIDDING PURPOSES

PART 2 - PRODUCTS

2.1 PERFORMANCE REQUIREMENTS

A. Fire-Test-Response Characteristics: For resilient sheet flooring, as determined by testing identical products according to ASTM E 648 or NFPA 253 by a qualified testing agency.

1. Critical Radiant Flux Classification: Class I, not less than 0.45 W/sq. cm.

2.2 UNBACKED VINYL SHEET FLOORING (SV-1 & SV-2)

A. Basis of Design: Armstrong Color Art Medintone. Subject to compliance with requirements, available Manufacturers that may be incorporated into the Work include, but are not limited to, the following:
1. Forbo Industries, Inc; .
2. Johnsonite; A Tarkett Company;
3. Mannington Mills, Inc;
4. Toli International

B. Product Standard: ASTM F 1913.

C. Thickness: 0.080 inch (2.0 mm)

D. Wearing Surface: Smooth.

E. Sheet Width: As standard with manufacturer.

F. Seamless-Installation Method: Heat welded

G. Colors and Patterns:
1. SV-1: H5307 Rock Dust Light
2. SV-2: H5306 Natural Gray Dark

2.3 INSTALLATION MATERIALS

A. Trowelable Leveling and Patching Compounds: Latex-modified, portland cement based or blended hydraulic-cement-based formulation provided or approved by resilient sheet flooring manufacturer for applications indicated.

B. Adhesives: Water-resistant type recommended by flooring and adhesive manufacturers to suit resilient sheet flooring and substrate conditions indicated.

1. Adhesives shall have a VOC content of 60 g/L or less.

C. Seamless-Installation Accessories:

1. Heat-Welding Bead: Manufacturer's solid-strand product for heat welding seams.

NOT FOR BIDDING PURPOSES

a. Color: As selected by Architect from manufacturer's full range

D. Floor Polish: Provide protective, liquid floor-polish products recommended by resilient sheet flooring manufacturer.

PART 3 - EXECUTION

3.1 EXAMINATION

A. Examine substrates, with Installer present, for compliance with requirements for maximum moisture content and other conditions affecting performance of the Work.

1. Verify that finishes of substrates comply with tolerances and other requirements specified in other Sections and that substrates are free of cracks, ridges, depressions, scale, and foreign deposits that might interfere with adhesion of resilient sheet flooring.

B. Proceed with installation only after unsatisfactory conditions have been corrected.

3.2 PREPARATION

A. Prepare substrates according to resilient sheet flooring manufacturer's written instructions to ensure adhesion of resilient sheet flooring.

B. Concrete Substrates: Prepare according to ASTM F 710.

1. Verify that substrates are dry and free of curing compounds, sealers, and hardeners.
2. Remove substrate coatings and other substances that are incompatible with adhesives or may affect floor installation Do not use solvents.

C. Fill cracks, holes, and depressions in substrates with trowelable leveling and patching compound; remove bumps and ridges to produce a uniform and smooth substrate.

D. Do not install resilient sheet flooring until it is the same temperature as the space where it is to be installed.

1. At least 48 hours in advance of installation, move flooring and installation materials into spaces where they will be installed.

E. Immediately before installation, sweep and vacuum clean substrates to be covered by resilient sheet flooring.

3.3 RESILIENT SHEET FLOORING INSTALLATION

A. Comply with manufacturer's written instructions for installing resilient sheet flooring.

B. Unroll resilient sheet flooring and allow it to stabilize before cutting and fitting.

C. Lay out resilient sheet flooring as follows:

NOT FOR BIDDING PURPOSES

1. Maintain uniformity of flooring direction.
2. Minimize number of seams; place seams in inconspicuous and low-traffic areas, at least 6 inches (152 mm) away from parallel joints in flooring substrates.
3. Match edges of flooring for color shading at seams.
4. Avoid cross seams.

D. Scribe and cut resilient sheet flooring to butt neatly and tightly to vertical surfaces, permanent fixtures, and built-in furniture including cabinets, pipes, outlets, and door frames.

E. Extend resilient sheet flooring into toe spaces, door reveals, closets, and similar openings.

F. Maintain reference markers, holes, and openings that are in place or marked for future cutting by repeating on resilient sheet flooring as marked on substrates. Use chalk or other nonpermanent marking device.

G. Install resilient sheet flooring on covers for telephone and electrical ducts and similar items in installation areas. Maintain overall continuity of color and pattern between pieces of flooring installed on covers and adjoining flooring. Tightly adhere flooring edges to substrates that abut covers and to cover perimeters.

H. Adhere resilient sheet flooring to substrates using a full spread of adhesive applied to substrate to produce a completed installation without open cracks, voids, raising and puckering at joints, telegraphing of adhesive spreader marks, and other surface imperfections.

I. Seamless Installation:

1. Heat-Welded Seams: Comply with ASTM F 1516. Rout joints and heat weld with welding bead to permanently fuse sections into a seamless flooring. Prepare, weld, and finish seams to produce surfaces flush with adjoining flooring surfaces.

3.4 CLEANING AND PROTECTION

A. Comply with manufacturer's written instructions for cleaning and protecting resilient sheet flooring.

B. Perform the following operations immediately after completing resilient sheet flooring installation:

1. Remove adhesive and other blemishes from surfaces.
2. Sweep and vacuum surfaces thoroughly.
3. Damp-mop surfaces to remove marks and soil.

C. Protect resilient sheet flooring from mars, marks, indentations, and other damage from construction operations and placement of equipment and fixtures during remainder of construction period.

D. Cover resilient sheet flooring until Substantial Completion.

END OF SECTION 09 65 16

NOT FOR BIDDING PURPOSES

SECTION 09 65 19

RESILIENT TILE FLOORING

PART 1 -GENERAL

1.1 RELATED DOCUMENTS

A. Drawings and general provisions of the Contract, including General and Supplementary Conditions and Division 01 Specification Sections, apply to this Section.

1.2 SUMMARY

A. Section Includes:

1. Vinyl composition floor tile.
2. Polyester composition floor tile.
3. Luxury vinyl floor tile.
4. Rubber floor tile.

1.3 ACTION SUBMITTALS

A. Product Data: For each type of product.

B. Shop Drawings: For each type of resilient floor tile.

1. Include floor tile layouts, edges, columns, doorways, enclosing partitions, built-in furniture, cabinets, and cutouts.
2. Show details of special patterns.

C. Samples for Initial Selection: For each type of floor tile indicated.

D. Samples for Verification: Full-size units of each color and pattern of floor tile required.

1.4 INFORMATIONAL SUBMITTALS

A. Qualification Data: For Installer.

1.5 CLOSEOUT SUBMITTALS

A. Maintenance Data: For each type of floor tile to include in maintenance manuals.

1.6 MATERIALS MAINTENANCE SUBMITTALS

A. Furnish extra materials that match products installed and that are packaged with protective covering for storage and identified with labels describing contents.

NOT FOR BIDDING PURPOSES

1. Floor Tile: Furnish 1 box for every 50 boxes or fraction thereof, of each type, color, and pattern of floor tile installed.

1.7 QUALITY ASSURANCE

A. Installer Qualifications: A qualified installer who employs workers for this Project who are competent in techniques required by manufacturer for floor tile installation indicated.

B. Mockups: Build mockups to verify selections made under sample submittals and to demonstrate aesthetic effects and set quality standards for materials and execution.

1. Build mockups for floor tile including resilient base and accessories.

a. Size: Minimum 20 sq. ft. for each type, color, and pattern in locations directed by Architect.

2. Approval of mockups does not constitute approval of deviations from the Contract Documents contained in mockups unless Architect specifically approves such deviations in writing.

1.8 DELIVERY, STORAGE, AND HANDLING

A. Store floor tile and installation materials in dry spaces protected from the weather, with ambient temperatures maintained within range recommended by manufacturer, but not less than 50 deg F or more than 90 deg F. Store floor tiles on flat surfaces.

1.9 FIELD CONDITIONS

A. Maintain ambient temperatures within range recommended by manufacturer, but not less than 70 deg F or more than 95 deg F, in spaces to receive floor tile during the following time periods:

1. 48 hours before installation.
2. During installation.
3. 48 hours after installation.

B. After installation and until Substantial Completion, maintain ambient temperatures within range recommended by manufacturer, but not less than 55 deg F or more than 95 deg F.

C. Close spaces to traffic during floor tile installation.

D. Close spaces to traffic for 48 hours after floor tile installation.

E. Install floor tile after other finishing operations, including painting, have been completed.

PART 2 - PRODUCTS

2.1 VINYL COMPOSITION FLOOR TILE: VCT-1

A. Basis of Design Product: Subject to compliance with requirements, provide Armstrong; Standard Excelon, or comparable product by one of the following:

NOT FOR BIDDING PURPOSES

1. Mannington Commercial.
2. Johnsonite; Azrock Collection VCT.

B. Tile Standard: ASTM F 1066, Class 2, through pattern.

C. Wearing Surface: Smooth.

D. Thickness: 0.125 inch.

E. Size: 12 by 12 inches.

F. Refer to Section 090600 for colors.

2.2 POLYESTER COMPOSITION FLOOR TILE: VCT-2, VCT-3, VCT-4, VCT-5

A. Basis of Design Product: Subject to compliance with requirements, provide Armstrong; Migrations BBT, or comparable product by one of the following:

1. Mannington Commercial.
2. Johnsonite; Azrock Collection VCT.

B. Tile Standard: ASTM F 2982, through pattern.

C. Wearing Surface: Smooth.

D. Thickness: 0.125 inch.

E. Size: 12 by 12 inches.

F. Refer to Section 090600 for colors.

2.3 LUXURY VINYL FLOOR TILE: LVT (Base Bid and Alternate Bid)

A. Basis of Design Product: Subject to compliance with requirements, provide Armstrong; Natural Creations LVT, or comparable product by one of the following:

1. Mannington Commercial.
2. Johnsonite; Azrock Collection VCT.

B. Tile Standard: ASTM F 1700. Class III, Printed Film Vinyl Tile, Type B embossed surface.

C. Wearing Surface: Smooth.

D. Thickness: 0.125 inch.

E. Refer to Section 090600 for sizes and colors.

2.4 RUBBER FLOOR TILE

A. Basis of Design Product: Subject to compliance with requirements, provide Johnsonite; Microtone Rubber Tile Flooring, or comparable product by one of the following:

NOT FOR BIDDING PURPOSES

1. Flexco.
2. Mannington Commercial.

B. Tile Standard: ASTM F 1344. Class I-B, Homogeneous Rubber Tile, through mottled.

C. Wearing Surface: Hammered texture.

D. Thickness: 0.080 inch.

E. Size: 24 by 24 inches.

F. Refer to Section 090600 for colors.

2.5 INSTALLATION MATERIALS

A. Trowelable Leveling and Patching Compounds: Latex-modified, portland cement based or blended hydraulic-cement-based formulation provided or approved by floor tile manufacturer for applications indicated.

B. Adhesives: Water-resistant type recommended by floor tile and adhesive manufacturers to suit floor tile and substrate conditions indicated.

C. Floor Polish: Provide protective, liquid floor-polish products recommended by floor tile manufacturer.

PART 3 - EXECUTION

3.1 EXAMINATION

A. Examine substrates, with Installer present, for compliance with requirements for maximum moisture content and other conditions affecting performance of the Work.

1. Verify that finishes of substrates comply with tolerances and other requirements specified in other Sections and that substrates are free of cracks, ridges, depressions, scale, and foreign deposits that might interfere with adhesion of floor tile.

B. Proceed with installation only after unsatisfactory conditions have been corrected.

3.2 PREPARATION

A. Prepare substrates according to floor tile manufacturer's written instructions to ensure adhesion of resilient products.

B. Concrete Substrates: Prepare according to ASTM F 710.

1. Verify that substrates are dry and free of curing compounds, sealers, and hardeners.
2. Remove substrate coatings and other substances that are incompatible with adhesives and that contain soap, wax, oil, or silicone, using mechanical methods recommended by floor tile manufacturer. Do not use solvents.
3. Alkalinity and Adhesion Testing: Perform tests recommended by floor tile manufacturer. Proceed with installation only after substrate alkalinity falls within range on pH scale recommended by manufacturer in writing, but not less than 5 or more than 9 pH.

NOT FOR BIDDING PURPOSES

4. Moisture Testing: Proceed with installation only after substrates pass testing according to floor tile manufacturer's written recommendations, but not less stringent than the following:

   a. Perform anhydrous calcium chloride test according to ASTM F 1869. Proceed with installation only after substrates have maximum moisture-vapor-emission rate of 3 lb of water/1000 sq. ft. (1.36 kg of water/92.9 sq. m) in 24 hours.
   b. Perform relative humidity test using in situ probes according to ASTM F 2170. Proceed with installation only after substrates have a maximum 75 percent relative humidity level.

A. Fill cracks, holes, and depressions in substrates with trowelable leveling and patching compound; remove bumps and ridges to produce a uniform and smooth substrate.

D. Do not install floor tiles until they are the same temperature as the space where they are to be installed.

   1. At least 48 hours in advance of installation, move resilient floor tile and installation materials into spaces where they will be installed.

E. Immediately before installation, sweep and vacuum clean substrates to be covered by resilient floor tile.

F. Water-jet cut all arcs in floor patterns. Field cutting is not acceptable for arcs/radius.

3.3 FLOOR TILE INSTALLATION

A. Comply with manufacturer's written instructions for installing floor tile.

B. Lay out floor tiles from center marks established with principal walls, discounting minor offsets, so tiles at opposite edges of room are of equal width. Adjust as necessary to avoid using cut widths that equal less than one-half tile at perimeter.

   1. Lay tiles in pattern indicated.

C. Match floor tiles for color and pattern by selecting tiles from cartons in the same sequence as manufactured and packaged, if so numbered. Discard broken, cracked, chipped, or deformed tiles.

   1. Lay tiles in pattern of colors and sizes indicated.

D. Scribe, cut, and fit floor tiles to butt neatly and tightly to vertical surfaces and permanent fixtures including built-in furniture, cabinets, pipes, outlets, and door frames.

E. Extend floor tiles into toe spaces, door reveals, closets, and similar openings. Extend floor tiles to center of door openings.

F. Maintain reference markers, holes, and openings that are in place or marked for future cutting by repeating on floor tiles as marked on substrates. Use chalk or other nonpermanent marking device.

NOT FOR BIDDING PURPOSES

G. Install floor tiles on covers for telephone and electrical ducts, building expansion-joint covers, and similar items in finished floor areas. Maintain overall continuity of color and pattern between pieces of tile installed on covers and adjoining tiles. Tightly adhere tile edges to substrates that abut covers and to cover perimeters.

H. Adhere floor tiles to flooring substrates using a full spread of adhesive applied to substrate to produce a completed installation without open cracks, voids, raising and puckering at joints, telegraphing of adhesive spreader marks, and other surface imperfections.

3.5 CLEANING AND PROTECTION

A. Comply with manufacturer's written instructions for cleaning and protecting floor tile.

B. Perform the following operations immediately after completing floor tile installation:

1. Remove adhesive and other blemishes from surfaces.
2. Sweep and vacuum surfaces thoroughly.
3. Damp-mop surfaces to remove marks and soil.

C. Protect floor tile from mars, marks, indentations, and other damage from construction operations and placement of equipment and fixtures during remainder of construction period.

D. Floor Polish: Building maintenance staff will apply liquid floor polish.

E. Cover floor tile until Substantial Completion.

END OF SECTION 09 65 19

NOT FOR BIDDING PURPOSES

NOT FOR BIDDING PURPOSES

SECTION 09 67 23 - RESINOUS FLOORING

PART 1 - GENERAL

1.1 RELATED DOCUMENTS

A. Drawings and general provisions of the Contract, including General and Supplementary Conditions and Division 1 Specification Sections, apply to this Section.

1.2 SUMMARY

A. This Section includes resinous flooring systems

B. Related Sections include the following:

1. Division 7 Section "Joint Sealants" for sealants installed at joints in resinous flooring systems.

1.3 SUBMITTALS

A. Product Data: For each type of product indicated. Include manufacturer's technical data, application instructions, and recommendations for each resinous flooring component required.

B. Samples for Initial Selection: For each type of exposed finish required.

C. Samples for Verification: For each resinous flooring system required, 6 inches (150 mm) square, applied to a rigid backing by Installer for this Project.

D. Product Schedule: Use resinous flooring designations indicated in Part 2 and room designations indicated on Drawings in product schedule.

E. Installer Certificates: Signed by manufacturer certifying that installers comply with specified requirements.

F. Material Test Reports: For each resinous flooring component.

G. Material Certificates: For each resinous flooring component, signed by manufacturer.

H. Maintenance Data: For resinous flooring to include in maintenance manuals.

1.4 QUALITY ASSURANCE

A. Installer Qualifications: Engage an experienced installer (applicator), with a record of successful in-service performance in applying resinous flooring systems similar in material, design, and extent to those indicated for this Project.

1. Engage an installer who employs only persons trained and approved by resinous flooring manufacturer for applying resinous flooring systems indicated.
2. Engage an installer who is certified in writing by resinous flooring manufacturer as qualified to apply resinous flooring systems indicated.

B. Source Limitations: Obtain primary resinous flooring materials, including primers, resins, hardening agents, patching and fill material, joint sealant, repair materials, grouting coats, and topcoats, through one source from a single manufacturer.

1.5 DELIVERY, STORAGE, AND HANDLING

A. Deliver materials in original packages and containers, with seals unbroken, bearing manufacturer's labels indicating brand name and directions for storage and mixing with other components.

B. Store materials to prevent deterioration from moisture, heat, cold, direct sunlight, or other detrimental effects.

1.6 PROJECT CONDITIONS

A. Environmental Limitations: Comply with resinous flooring manufacturer's written instructions for substrate temperature, ambient temperature, moisture, ventilation, and other conditions affecting resinous flooring application.

B. Lighting: Provide permanent lighting.

C. Close spaces to traffic during resinous flooring application and for not less than 24 hours after application, unless manufacturer recommends a longer period.

PART 2 - PRODUCTS

2.1 RESINOUS FLOORING – RES-1 & RSB-1

A. Manufacturers: Basis-of-Design Product: Stonhard; Stonetec TRF with Texture 2 finish. Subject to meeting the specifications, products by other manufacturers, including, but not limited to the following may be considered:

1. Crossfield Products Corp., Dex-O-Tex.
2. Durex Coverings.
3. Seamless Technologies.

B. Resinous Flooring: Abrasion-, impact- and stain -resistant, decorative-aggregate-filled, epoxy-resin-based, monolithic floor surfacing designed to produce a seamless floor and integral cove base.

C. Materials: VOC Content of Resinous Flooring: Provide resinous flooring systems, for use inside the weatherproofing system, that comply with the following limits for VOC content when calculated according to 40 CFR 59, Subpart D (EPA Method 24): Resinous Flooring: 100 g/L.

NOT FOR BIDDING PURPOSES

D. System Characteristics:

1. Color and Pattern: TBD from manufacturers full range for color
2. Wearing Surface: Textured 2.
3. Integral Cove Base: 6" H (RSB-1)
4. Overall System Thickness: 3/16"

E. System Components: Manufacturer's standard components that are compatible with each other and as follows:
1. Body Coats:
   a. Resin: Urethane Composition.
   b. Formulation Description: VOC Compliant
   c. Application Method: Slurry mortar with broadcast quartz aggregate.
      1) Thickness of Coats: 3/16"
      2) Number of Broadcast Coats: Two (2)
   d. Aggregates: Colored quartz (ceramic-coated silica).

F. Topcoat: Sealing or finish coats.
   a. Resin: Chemical Resistant Polyaspartic.
   b. Formulation Description: High solids.
   c. Type: Clear.
   d. Finish: Gloss
   e. Number of Coats: Two (2)

2.2 RESINOUS FLOORING – RES-2 & RSB-2

A. Manufacturers: Basis-of-Design Product: Stonhard; Stonetec TRF. Subject to meeting the specifications, products by other manufacturers, including, but not limited to the following may be considered

1. Crossfield Products Corp., Dex-O-Tex.
2. Durex Coverings.
3. Seamless Technologies.

B. Resinous Flooring: Abrasion-, impact- and stain -resistant, decorative-aggregate-filled, epoxy-resin-based, monolithic floor surfacing designed to produce a seamless floor and integral cove base.

C. Materials: VOC Content of Resinous Flooring: Provide resinous flooring systems, for use inside the weatherproofing system, that comply with the following limits for VOC content when calculated according to 40 CFR 59, Subpart D (EPA Method 24): Resinous Flooring: 100 g/L.

D. System Characteristics:

1. Color and Pattern: TBD from manufacturers full range for color
2. Integral Cove Base: 6" High (RSB-2)
3. Overall System Thickness: 3/16"

NOT FOR BIDDING PURPOSES

E. System Components: Manufacturer's standard components that are compatible with each other and as follows:
   1. Body Coats:
      a. Resin: Urethane Composition.
      b. Formulation Description: VOC Compliant
      c. Application Method: Slurry mortar with broadcast quartz aggregate.
         1) Thickness of Coats: 3/16”
         2) Number of Broadcast Coats: Two (2)
      d. Aggregates: Colored quartz (ceramic-coated silica).

F. Topcoat: Sealing or finish coats.
   a. Resin: Chemical Resistant Polyaspartic.
   b. Formulation Description: High solids.
   c. Type: Clear.
   d. Finish: Gloss
   e. Number of Coats: Two (2)

2.3 ACCESSORY MATERIALS

A. Primer: Type recommended by manufacturer to substrate and body indicated

B. Patching and Fill Material: Resinous product of or approved by resinous flooring manufacturer and recommended by manufacturer for application indicated.

C. Metal Cap for integral Cove Base: Square metal cap approved by flooring manufacturer

D. Joint Sealant: Type recommended or produced by resinous flooring manufacturer for type of service and joint condition indicated.

   1. Use sealants that have a VOC content of 250 g/L or less when calculated according to 40 CFR 59, Subpart D (EPA Method 24).

PART 3 - EXECUTION

3.1 PREPARATION

A. General: Prepare and clean substrates according to resinous flooring manufacturer's written instructions for substrate indicated. Provide clean, dry, and neutral Ph substrate for resinous flooring application.

B. Concrete Substrates: Provide sound concrete surfaces free of laitance, glaze, efflorescence, curing compounds, form-release agents, dust, dirt, grease, oil, and other contaminants incompatible with resinous flooring.

   1. Roughen concrete substrates as follows:
      a. Comply with ASTM C 811 requirements, unless manufacturer's written instructions are more stringent.

NOT FOR BIDDING PURPOSES

2. Repair damaged and deteriorated concrete according to resinous flooring manufacturer's written recommendations.
3. Verify that concrete substrates are dry.

   a. Perform anhydrous calcium chloride test, ASTM F 1869. Proceed with application only after substrates have maximum moisture-vapor-emission rate of 5 lbs. of water/1000 sq. ft. (1.36 kg of water/92.9 sq. m) of slab in 24 hours.
   b. Perform plastic sheet test, ASTM D 4263. Proceed with application only after testing indicates absence of moisture in substrates.
   c. Perform additional moisture tests recommended by manufacturer. Proceed with application only after substrates pass testing.

4. Verify that concrete substrates have neutral Ph and that resinous flooring will adhere to them. Perform tests recommended by manufacturer. Proceed with application only after substrates pass testing.

C. Resinous Materials: Mix components and prepare materials according to resinous flooring manufacturer's written instructions.

D. Use patching and fill material to fill holes and depressions in substrates according to manufacturer's written instructions.

E. Treat control joints and other nonmoving substrate cracks to prevent cracks from reflecting through resinous flooring according to manufacturer's written recommendations.

3.2 APPLICATION

A. General: Apply components of resinous flooring system according to manufacturer's written instructions to produce a uniform, monolithic wearing surface of thickness indicated.

1. Coordinate application of components to provide optimum adhesion of resinous flooring system to substrate and optimum intercoat adhesion.
2. Cure resinous flooring components according to manufacturer's written instructions. Prevent contamination during application and curing processes.
3. At substrate expansion and isolation joints, provide joint in resinous flooring to comply with resinous flooring manufacturer's written recommendations.

   a. Apply joint sealant to comply with manufacturer's written recommendations.

B. Apply primer over prepared substrate at manufacturer's recommended spreading rate.

C. Apply reinforcing membrane to substrate cracks.

D. Integral Cove Base: Apply cove base mix to wall surfaces before applying flooring. Apply according to manufacturer's written instructions and details including those for taping, mixing, priming, troweling, sanding, and topcoating of cove base. Round internal and external corners.

E. Apply self-leveling slurry body coat in thickness indicated for flooring system.

NOT FOR BIDDING PURPOSES

1. Broadcast aggregates and, after resin is cured, remove excess aggregates to provide surface texture indicated.

F. Apply topcoat(s) in number of coats indicated for flooring system and at spreading rates recommended in writing by manufacturer.

3.3 FIELD QUALITY CONTROL

A. Core Sampling: IF REQUESTED At the direction of Owner and at locations designated by Owner, take 1 core sample per 1000 sq. ft. (92.9 sq. m) of resinous flooring, or portion of, to verify thickness. For each sample that fails to comply with requirements, take two additional samples. Repair damage caused by coring and correct deficiencies.

B. Material Sampling: Owner may at any time and any number of times during resinous flooring application require material samples for testing for compliance with requirements.

1. Owner will engage AT HIS COST an independent testing agency to take samples of materials being used. Material samples will be taken, identified, sealed, and certified in presence of Contractor.
2. Testing agency will test samples for compliance with requirements, using applicable referenced testing procedures or, if not referenced, using testing procedures listed in manufacturer's product data.
3. If test results show applied materials do not comply with specified requirements, CONTRACTOR WILL BE RESPONSIBLE for costs of testing, remove noncomplying materials, prepare surfaces coated with unacceptable materials, and reapply flooring materials to comply with requirements.

3.4 CLEANING AND PROTECTING

A. Protect resinous flooring from damage and wear during the remainder of construction period. Use protective methods and materials, including temporary covering, recommended in writing by resinous flooring manufacturer.

END OF SECTION 09 67 23

NOT FOR BIDDING PURPOSES

NOT FOR BIDDING PURPOSES

SECTION 09 68 13 - CARPET TILE

PART 1 - GENERAL

1.1 RELATED DOCUMENTS

A. Drawings and general provisions of the Contract, including General and Supplementary Conditions and Division 1 Specification Sections, apply to this Section.

1.2 SUMMARY

A. This Section includes modular, tufted walk off carpet tile.

B. Related Sections include the following:

1. Division 9 Section Resilient Wall Base and Accessories" for resilient wall base and accessories installed with carpet tile.

1.3 SUBMITTALS

A. Product Data: For each type of product indicated. Include manufacturer's written data on physical characteristics, durability, and fade resistance. Include installation recommendations for each type of substrate.

B. Shop Drawings: Show the following:

1. Columns, doorways, enclosing walls or partitions, built-in cabinets, and locations where cutouts are required in carpet tiles.
2. Carpet tile type, color, and dye lot.
3. Type of installation.
4. Pattern of installation.
5. Pattern type, location, and direction, including location of “tops” and “bottoms”
6. Type, color, and location of insets and borders.
7. Type, color, and location of edge, transition, and other accessory strips.
8. Transition details to other flooring materials.

C. Samples: For each of the following products and for each color and texture required. Label each Sample with manufacturer's name, material description, color, pattern, and designation indicated on Drawings and in schedules.

1. Carpet Tile: Full-size Sample.
2. Exposed Edge, Transition, and other Accessory Stripping: 12-inch- (300-mm-) long Samples.

D. Qualification Data: For Installer.

E. Product Test Reports: Based on evaluation of comprehensive tests performed by a qualified testing agency.

F. Maintenance Data: For carpet tiles to include in maintenance manuals. Include the following:

1. Methods for maintaining carpet tile, including cleaning and stain-removal products and procedures and manufacturer's recommended maintenance schedule.
2. Precautions for cleaning materials and methods that could be detrimental to carpet tile.

G. Warranty: Special warranty specified in this Section.

1.4 QUALITY ASSURANCE

A. Installer Qualifications: An experienced installer who is certified by the Floor Covering Installation Board or who can demonstrate compliance with its certification program requirements.

B. Fire-Test-Response Characteristics: Provide products with the critical radiant flux classification indicated in Part 2, as determined by testing identical products per ASTM E 648 by an independent testing and inspecting agency acceptable to authorities having jurisdiction.

C. Pre-Installation Conference: Conduct conference at Project site to comply with requirements in Division 1 Section "Project Management and Coordination."

1.5 DELIVERY, STORAGE, AND HANDLING

A. Comply with CRI 104, Section 5, "Storage and Handling."

1.6 FIELD CONDITIONS

A. Comply with CRI 104, Section 7.2, "Site Conditions; Temperature and Humidity" and Section 7.12, "Ventilation."

B. Environmental Limitations: Do not install carpet tiles until wet work in spaces is complete and dry, and ambient temperature and humidity conditions are maintained at the levels indicated for Project when occupied for its intended use.

1.7 WARRANTY

A. Special Warranty for Carpet Tiles: Manufacturer's standard form in which manufacturer agrees to repair or replace components of carpet tile installation that fail in materials or workmanship within specified warranty period.

1. Warranty does not include deterioration or failure of carpet tile due to unusual traffic, failure of substrate, vandalism, or abuse.

NOT FOR BIDDING PURPOSES

2. Failures include, but are not limited to, more than 10 percent loss of face fiber, edge raveling, snags, runs, loss of tuft bind strength, dimensional stability, excess static discharge, and delamination.
3. Warranty Period: 10 years from date of Substantial Completion.

1.8 EXTRA MATERIALS

A. Furnish extra materials described below, before installation begins, that match products installed and that are packaged with protective covering for storage and identified with labels describing contents.

1. Carpet Tile: Full-size units equal to 5 percent of amount installed for each type indicated, but not less than 10 sq. yd.

PART 2 - PRODUCTS

2.1 Basis-of-Design Product: The design for the product identified is based on the product named. The use of a trade name and/or suppliers name and address in the specifications is to indicate a possible source of the product and a standard of quality. Products of the same type from other sources shall not be excluded, provided they possess like physical and functional and aesthetic characteristics. Refer to Division 1, "Product Requirements" for process to obtain approval of other products.

2.2 CARPET – CT-1

A. Manufacturers: Basis-of-Design Product: Subject to compliance with requirements, provide Shaw, Allure Tile 59327, Color: 27585 Gleam or a comparable product by one of the following:

1. Mannington Commercial
2. Interface
3. Bentley

B. Fiber Content: 100 percent nylon 6, 6. Solution dyed.

C. Fiber Type: ECO Solution Q Nylon

D. Pile Characteristic: Multi-level patterned loop.

E. Tufted Weight: 17.0 oz./sq. yd.

F. Primary Backing: Synthetic.

G. Secondary Backing: Ecoworx Tile.

H. Backcoating: Manufacturer's standard material.

I. Backing System: Ecoworx.

NOT FOR BIDDING PURPOSES

J. Width: 24” x 24”

K. Applied Soil-Resistance Treatment: SSP Shaw Soil Protection.

L. Antimicrobial Treatment: Manufacturer's standard material.

M. Installation Method: TBD.

2.3 CARPET – CT-2

A. Manufacturers: Basis-of-Design Product: Subject to compliance with requirements, provide Shaw, Linear Shift Hexagon 5T085, Color: Charcoal Tweed 56595 or a comparable product by one of the following:

1. Mannington Commercial
2. Interface
3. Bentley

B. Fiber Content: 100 percent nylon 6, 6. Solution Dyed.

C. Fiber Type: ECO Solution Q Nylon

D. Pile Characteristic: Random Tip Shear.

E. Tufted Weight: 22.0 oz./sq. yd.

F. Primary Backing: Synthetic.

G. Secondary Backing: Ecoworx Tile.

H. Backcoating: Manufacturer's standard material.

I. Backing System: Ecoworx.

J. Width: 25” x 29”

K. Applied Soil-Resistance Treatment: SSP Shaw Soil Protection.

L. Antimicrobial Treatment: Manufacturer's standard material.

M. Installation Method: TBD

N. Colors:
1. CT-2: 56595 Charcoal Tweed

NOT FOR BIDDING PURPOSES

2.4 CARPET – CT-3, CT-4 and CT-5

A. Manufacturers: Basis-of-Design Product: Subject to compliance with requirements, provide Shaw, Plane Hexagon 5T054, Color as noted below or a comparable product by one of the following:

1. Mannington Commercial
2. Interface
3. Bentley

B. Fiber Content: 100 percent nylon 6, 6. Solution is Dyed.

C. Fiber Type: ECO Solution Q Nylon

D. Pile Characteristic: Random Tip Shear.

E. Tufted Weight: 22.0 oz./sq. yd.

F. Primary Backing: Synthetic.

G. Secondary Backing: Ecoworx Tile.

H. Backcoating: Manufacturer's standard material.

I. Backing System: Ecoworx.

J. Width: 25” x 29”

K. Applied Soil-Resistance Treatment: SSP Shaw Soil Protection.

L. Antimicrobial Treatment: Manufacturer's standard material.

M. Installation Method: TBD

N. Colors:
1. CT-3: 54546 Graphite
2. CT-4: 54530 Tweed
3. CT-5: 54211 Yellow

2.5 CARPET – CT-6

A. Manufacturers: Basis-of-Design Product: Subject to compliance with requirements, provide Interface, Step Repeat SR899, Color: TBD or a comparable product by one of the following:

1. Mannington Commercial
2. Shaw
3. Bentley

B. Fiber Content: 100 percent nylon 6, 6. Recycled content and solution dyed

NOT FOR BIDDING PURPOSES

C. Fiber Type: Aquafil

D. Pile Characteristic: Tufted Textured

E. Tufted Weight: 26.0 oz./sq. yd.

F. Primary Backing: Synthetic.

G. Secondary Backing: Glasbac.

H. Backcoating: Manufacturer's standard material.

I. Backing System: Ecoworx.

J. Width: 19.69” x 19.69”

K. Applied Soil-Resistance Treatment: Protekt and Intersept

L. Antimicrobial Treatment: Manufacturer's standard material.

P. Installation Method: TBD.

2.6 CARPET – CT-7

A. Manufacturers: Basis-of-Design Product: Subject to compliance with requirements, provide Shaw, Interact Tile 5T085, Color: Heather Ale 84530 or a comparable product by one of the following:

1. Mannington Commercial
2. Interface
3. Bentley

B. Fiber Content: 100 percent nylon 6, 6. Solution Dyed.

C. Fiber Type: ECO Solution Q Nylon

D. Pile Characteristic: Random Tip Shear.

E. Tufted Weight: 22.0 oz./sq. yd.

F. Primary Backing: Synthetic.

G. Secondary Backing: Ecoworx Tile.

H. Backcoating: Manufacturer's standard material.

I. Backing System: Ecoworx.

J. Width: 25” x 29”

NOT FOR BIDDING PURPOSES

K. Applied Soil-Resistance Treatment: SSP Shaw Soil Protection.

L. Antimicrobial Treatment: Manufacturer's standard material.

M. Installation Method: TBD

N. Colors:
1. CT-7: 84530 Heather Ale

2.7 INSTALLATION ACCESSORIES

A. Trowelable Leveling and Patching Compounds: Latex-modified, hydraulic-cement-based formulation provided or recommended by carpet tile manufacturer.

B. Adhesives: Water-resistant, mildew-resistant, nonstaining, pressure-sensitive type to suit products and subfloor conditions indicated, that complies with flammability requirements for installed carpet tile and is recommended by carpet tile manufacturer for releasable installation.

PART 3 - EXECUTION

3.1 EXAMINATION

A. Examine substrates, areas, and conditions, with Installer present, for compliance with requirements for maximum moisture content, alkalinity range, installation tolerances, and other conditions affecting carpet tile performance. Examine carpet tile for type, color, pattern, and potential defects.

B. Concrete Subfloors: Verify that concrete slabs comply with ASTM F 710 and the following:

1. Slab substrates are dry and free of curing compounds, sealers, hardeners, and other materials that may interfere with adhesive bond. Determine adhesion and dryness characteristics by performing bond and moisture tests recommended by carpet tile manufacturer.
2. Subfloor finishes comply with requirements specified in Division 3 Section "Cast-in-Place Concrete" for slabs receiving carpet tile.
3. Perform recommended preinstallation moisture and alkalinity tests by qualified personnel. According to ASTM guidelines.
4. Subfloors are free of cracks, ridges, depressions, scale, and foreign deposits.

C. Proceed with installation only after unsatisfactory conditions have been corrected.

3.2 PREPARATION

A. General: Comply with CRI 104, Section 6.2, "Site Conditions; Floor Preparation," and with carpet tile manufacturer's written installation instructions for preparing substrates indicated to receive carpet tile installation.

NOT FOR BIDDING PURPOSES

B. Use trowelable leveling and patching compounds, according to manufacturer's written instructions, to fill cracks, holes, depressions, and protrusions in substrates. Fill or level cracks, holes and depressions 1/8 inch (3 mm) wide or wider and protrusions more than 1/32 inch (0.8 mm), unless more stringent requirements are required by manufacturer's written instructions.

C. Remove coatings, including curing compounds, and other substances that are incompatible with adhesives and that contain soap, wax, oil, or silicone, without using solvents. Use mechanical methods recommended in writing by carpet tile manufacturer.

D. Broom and vacuum clean substrates to be covered immediately before installing carpet tile.

3.3 INSTALLATION

A. General: Comply with CRI 104, Section 14, "Carpet Modules," and with carpet tile manufacturer's written installation instructions.

B. Installation Method: As recommended in writing by carpet tile manufacturer.

C. Establish layout lines for room(s) in accordance with approved shop drawings

D. Using a recommended nap paint roller, apply adhesive along each base line and all room perimeters (each wall), and minimum 30 ft grid unless closer spacing is recommended by manufacturer for application. Apply full spread of adhesive under every cut tile and any adjoining tile to the cut tile, corridors and areas exposed to high foot traffic and/or heavy rolling traffic.

E. Maintain dye lot integrity. Do not mix dye lots in same area.

F. Install in pattern and direction as directed by architect.

G. Cut and fit carpet tile to butt tightly to vertical surfaces, permanent fixtures, and built-in furniture including cabinets, pipes, outlets, edgings, thresholds, and nosings. Bind or seal cut edges as recommended by carpet tile manufacturer.

H. Extend carpet tile into toe spaces, door reveals, closets, open-bottomed obstructions, removable flanges, alcoves, and similar openings.

I. Maintain reference markers, holes, and openings that are in place or marked for future cutting by repeating on finish flooring as marked on subfloor. Use nonpermanent, nonstaining marking device.

J. Install pattern parallel to walls and borders.

3.4 CLEANING AND PROTECTION

A. Perform the following operations immediately after installing carpet tile:

1. Remove excess adhesive, seam sealer, and other surface blemishes using cleaner recommended by carpet tile manufacturer.

NOT FOR BIDDING PURPOSES

2. Remove yarns that protrude from carpet tile surface.
3. Vacuum carpet tile using commercial machine with face-beater element.

B. Protect installed carpet tile to comply with CRI 104, Section 16, "Protection of Indoor Installations."

C. Protect carpet tile against damage from construction operations and placement of equipment and fixtures during the remainder of construction period. Use protection methods indicated or recommended in writing by carpet tile manufacturer.

END OF SECTION 09 68 13

NOT FOR BIDDING PURPOSES

NOT FOR BIDDING PURPOSES

SECTION 09 77 20 – FIBERGLASS REINFORCED WALL PANELS

PART 1 - GENERAL

1.1 SUMMARY

A. Section Includes: Prefinished polyester glass reinforced plastic sheets

B. Products Not Furnished or Installed under This Section:
1. Gypsum [Cementitious] substrate board.
2. Resilient Base.

1.2 RELATED SECTIONS

A. Section 09 29-00 - Gypsum [Cementitious] substrate board.

B. Section 09 91 00 - Painting & Transparent Finishes.

C. Section 09 61 53 - Resilient Base.

1.3 SUBMITTALS

A. Product Data: Submit sufficient manufacturer's data to indicate compliance with these specifications, including:
1. Preparation instructions and recommendations.
2. Storage and handling requirements and recommendations.
3. Installation methods.

B. Shop Drawings: Submit elevations of each wall showing location of paneling and trim members with respect to all discontinuities in the wall elevation.

C. Selection Samples: Submit manufacturer’s standard color pattern selection samples representing manufacturer's full range of available colors and patterns.

D. Samples for Verification: Submit appropriate section of panel for each finish selected indicating the color, texture, and pattern required.
1. Submit complete with specified applied finish.
2. For selected patterns show complete pattern repeat.
3. Exposed Molding and Trim: Provide samples of each type, finish, and color.

E. Manufacturers Material Safety Data Sheets (MSDS) for adhesives, sealants and other pertinent materials prior to their delivery to the site.

1.4 INFORMATIONAL SUBMITTALS

A. Qualification Data: For Installer.

1.5 CLOSEOUT SUBMITTALS

A. Maintenance Data: For FRP to include in maintenance manuals.

1.6 QUALITY ASSURANCE

A. Conform to building code requirements for interior finish for smoke and flame spread requirements as tested in accordance with:
   1. ASTM E 84 (Method of test for surface burning characteristics of building Materials)
      a. Wall Required Rating – Class [A] [C].

B. Sanitary Standards: System components and finishes to comply with:
   1. United States Department of Agriculture (USDA) requirements for food preparation facilities, incidental contact.
   2. Food and Drug Administration (FDA) 1999 Food Code 6-101.11.
   3. Canadian Food Inspection Agency (CFIA) requirements.

1.7 DELIVERY, STORAGE AND HANDLING

A. Deliver materials factory packaged on strong pallets.

B. Store panels and trim lying flat, under cover and protected from the elements. Allow panels to acclimate to room temperature (range of 60 to 75°F) for 48 hours prior to installation.

1.8 PROJECT CONDITIONS

A. Environmental Limitations: Building are to be fully enclosed prior to installation with sufficient heat (70°) and ventilation consistent with good working conditions for finish work

B. During installation and for not less than 48 hours before, maintain an ambient temperature and relative humidity within limits required by type of adhesive used and recommendation of adhesive manufacturer.
   1. Provide ventilation to disperse fumes during application of adhesive as recommended by the adhesive manufacturer.

1.9 WARRANTY

A. Furnish one year guarantee against defects in material and workmanship.

NOT FOR BIDDING PURPOSES

PART 2 - PRODUCTS

2.1 PERFORMANCE REQUIREMENTS

A. American Society for Testing and Materials: Standard Specifications (ASTM)
1. ASTM D 256 - Izod Impact Strengths (ft #/in)
2. ASTM D 570 - Water Absorption (%)
3. ASTM D 638 - Tensile Strengths (psi) & Tensile Modulus (psi)
4. ASTM D 790 - Flexural Strengths (psi) & Flexural Modulus (psi)
5. ASTM D 2583- Barcol Hardness
6. ASTM D 5319 - Standard Specification for Glass-Fiber Reinforced Polyester Wall and Ceiling Panels.
7. ASTM E 84 - Standard Test Method for Surface Burning Characteristics of Building Materials.

2.2 FRP PANELS

A. Basis of Design: Marlite standard FRP Panels – pebble finish.
1. Manufacturers that may be incorporated into the work included, but not limited to the following:
a. Crane Composites
b. Fiber-Tech Industries
c. Panolam Surface Systems

B. Fiberglass reinforced thermosetting polyester resin panel sheets complying with ASTM D 5319.
1. Coating: Multi-layer print, primer and finish coats or applied over-layer.
2. Dimensions:
a. Thickness – 0.090 " (2.29mm) nominal
b. Width - 4'-0" (1.22m) nominal
c. Length – [10'-0" (3.0m)][8'-0" (2.4m)][As indicated on the drawings] nominal
3. Tolerance:
a. Length and Width: +/-1/8 " (3.175mm)
b. Square - Not to exceed 1/8 " for 8 foot (2.4m) panels or 5/32 " (3.96mm) for 10 foot (2.4m) panels

C. Properties: Resistant to rot, corrosion, staining, denting, peeling, and splintering.
1. Flexural Strength - 1.0 x 10^4 psi per ASTM D 790. (7.0 kilogram-force/square millimeter)
2. Flexural Modulus - 3.1 x 10^5 psi per ASTM D 790. (217.9 kilogram-force/square millimeter)
3. Tensile Strength - 7.0 x 10^3 psi per ASTM D 638. (4.9 kilogram-force/square millimeter)
4. Tensile Modulus - 1.6 x 10^5 psi per ASTM D 638. (112.5 kilogram-force/square millimeter)
5. Water Absorption - 0.72% per ASTM D 570.
6. Barcol Hardness (scratch resistance) of 35 55 as per ASTM D 2583.
7. Izod Impact Strength of 72 ft. lbs./in ASTM D 256

NOT FOR BIDDING PURPOSES

2.3 MOLDINGS

Aluminum Trim: Heavy weight extruded aluminum 6063-T5 alloy prefinished at the factory.

1. Profiles:
   a. F 550 Inside Corner, 8' length
   b. F 561 Outside Corner, 8' length
   c. F 565 Division, 8' length
   d. F 570 Edge, 8' length
   e. Color: TBD

B. Aluminum Trim: Heavy weight extruded aluminum 6063-T5 alloy prefinished at the factory.
   a. A551Inside Corner, 8' length
   b. A560 Outside Corner, 8' length
   c. A565 Division, 8' length
   d. A570 Edge, 8' length
2. Color: to be selected from full range of manufacturer colors.

C. Outside Corner Guard:
1. F 560SS Stainless Corner Guard, [8' length][10' length]
2. Finish: #4 brushed satin
3. M 961 PVC Outside Corner Guard
   a. Color: [White, [8' length][10' length]][Natural Almond, [8' length][10' length]][Ivory, 10' length][Silver, 10' length][Light Grey, 10' length]

2.4 ACCESSORIES

A. Fasteners: Non-staining nylon drive rivets.
1. Match panel colors.
2. Length to suit project conditions.

B. Adhesive: Either of the following construction adhesives complying with ASTM C 557.
1. Marlite C-551 FRP Adhesive - Water- resistant, non-flammable adhesive.
2. Marlite C-915 Construction Adhesive - Flexible, water-resistant, solvent based adhesive, formulated for fast, easy application.
3. Titebond Advanced Polymer Panel Adhesive – VOC compliant, non-flammable, environmentally safe adhesive.

C. Sealant:
1. Marlite Brand MS-250 Clear Silicone Sealant.
2. Marlite Brand MS-251 White Silicone Sealant.
3. Marlite Brand - Color Match Sealant.

NOT FOR BIDDING PURPOSES

PART 3 - EXECUTION

3.1 PREPARATION

A. Examine backup surfaces to determine that corners are plumb and straight, surfaces are smooth, uniform, clean and free from foreign matter, nails countersunk, joints and cracks filled flush and smooth with the adjoining surface.
   1. Verify that stud spacing does not exceed 24” (61cm) on-center.

B. Repair defects prior to installation.
   1. Level wall surfaces to panel manufacturer’s requirements. Remove protrusions and fill indentations.

3.2 INSTALLATION

A. Comply with manufacturer's recommended procedures and installation sequence.

B. Cut sheets to meet supports allowing 1/8” (3 mm) clearance for every 8 foot (2.4m) of panel.
   1. Cut and drill with carbide tipped saw blades or drill bits, or cut with shears.
   2. Pre-drill fastener holes 1/8” (3mm) oversize with high speed drill bit.
      a. Space at 8” (200mm) maximum on center at perimeter, approximately 1” from panel edge.
      b. Space at in field in rows 16’ (40.64cm) on center, with fasteners spaced at 12” (30.48 cm) maximum on center.

C. Apply panels to board substrate, above base, vertically oriented with seams plumb and pattern aligned with adjoining panels.
   1. Install panels with manufacturer's recommended gap for panel field and corner joints.
      a. Adhesive trowel and application method to conform to adhesive manufacturer’s recommendations.
      b. Drive fasteners for snug fit. Do not over-tighten.

D. Apply panel moldings to all panel edges using silicone sealant providing for required clearances.
   1. All moldings must provide for a minimum 1/8 “ (3mm) of panel expansion at joints and edges, to insure proper installation.
   2. Apply sealant to all moldings, channels and joints between the system and different materials to assure watertight installation.

3.3 CLEANING

A. Remove excess sealant from panels and moldings. Wipe panel down using a damp cloth and mild soap solution or cleaner.

B. Refer to manufacturer's specific cleaning recommendations Do not use abrasive cleaners.

END OF SECTION 09 77 20

NOT FOR BIDDING PURPOSES

NOT FOR BIDDING PURPOSES

SECTION 09 77 23 - FABRIC-WRAPPED PANELS

PART 1 - GENERAL

1.1 RELATED DOCUMENTS

A. Drawings and general provisions of the Contract, including General and Supplementary Conditions and Division 01 Specification Sections, apply to this Section.

1.2 SUMMARY

A. This Section includes fabric-wrapped wall panels.

B. Related Sections include the following:
   1. Division 09 Section "Wall Coverings" for adhesively applied textile wall coverings.

1.3 SUBMITTALS

A. Product Data: For each type of panel edge, core material, and mounting indicated.

B. Shop Drawings: For fabric-wrapped panels. Include mounting devices and details; details at panel head, base, joints, and corners; and details at ceiling, floor base, and wall intersections. Indicate panel edge and core materials.

   1. Include elevations showing panel sizes and direction of fabric weave and pattern matching.

C. Coordination Drawings: Show intersections with wall base, shelves, countertops, drawers, doors, chart rails, chalk rails, electrical outlets and switches, thermostats, lighting fixtures, air outlets and inlets, speakers, sprinklers, access panels, and other adjacent work. Show operation of casework doors and drawers, doors.

D. Samples for Initial Selection: For each type of fabric facing material from fabric-wrapped panel manufacturer's full range.

E. Samples for Verification: For the following products. Prepare Samples from same material to be used for the Work.

   1. Fabric: Full-width by 36-inch- (914-mm-) long Sample from dye lot to be used for the Work, and as follows:

      a. With specified treatments applied.
      b. Show complete pattern repeat.
      c. Mark top and face of fabric.

   2. Panel Edge: 12-inch- (300-mm-) long Sample showing edge profile, corner, and finish.
   3. Core Material: 12-inch- (300-mm-) square Sample showing corner.
   4. Mounting Device: Full-size Sample.

5. Sample Panels: No larger than 36 by 36 inches (914 by 914 mm). Show joints and mounting methods.

F. Qualification Data: For fabricator and testing agency.

G. Maintenance Data: For fabric-wrapped panels to include in maintenance manuals. Include fabric manufacturers' written cleaning and stain-removal recommendations.

H. Warranty: Special warranty specified in this Section.

1.4 QUALITY ASSURANCE

A. Fabricator Qualifications: Shop that employs skilled workers who custom-fabricate products similar to those required for this Project and whose products have a record of successful in-service performance.

B. Source Limitations: Obtain fabric-wrapped panels through one source from a single manufacturer.

C. Fire-Test-Response Characteristics: Provide fabric-wrapped panels with the following surface-burning characteristics as determined by testing identical products per ASTM E 84 by UL or another testing and inspecting agency acceptable to authorities having jurisdiction:

1. Flame-Spread Index: 25 or less.
2. Smoke-Developed Index: 450 or less.

1.5 DELIVERY, STORAGE, AND HANDLING

A. Comply with fabric and fabric-wrapped panel manufacturers' written instructions for minimum and maximum temperature and humidity requirements for shipment, storage, and handling.

B. Deliver materials and panels in unopened bundles and store in a temperature-controlled dry place with adequate air circulation.

C. Protect panel edges from crushing and impact.

1.6 PROJECT CONDITIONS

A. Environmental Limitations: Do not install fabric-wrapped panels until spaces are enclosed and weatherproof, wet work in spaces is complete and dry, work above ceilings is complete, and ambient temperature and humidity conditions are maintained at the levels indicated for Project when occupied for its intended use.

B. Lighting: Do not install fabric-wrapped panels until a permanent level of lighting is provided on surfaces to receive fabric-wrapped panels.

C. Air-Quality Limitations: Protect fabric-wrapped panels from exposure to airborne odors such as tobacco smoke, and install panels under conditions free from odor contamination of ambient air.

D. Field Measurements: Verify locations of fabric-wrapped panels by field measurements before fabrication and indicate measurements on Shop Drawings.

NOT FOR BIDDING PURPOSES

1.7 WARRANTY

A. Special Warranty: Manufacturer's standard form in which manufacturer agrees to repair or replace components of fabric-wrapped panels that fail in materials or workmanship within specified warranty period.

1. Failures include, but are not limited to, fabric sagging, distorting, or releasing from panel edge; or warping of core.
2. Warranty Period: Two years from date of Substantial Completion.

1.8 EXTRA MATERIALS

A. Furnish extra materials described below, before installation begins, that match products installed and that are packaged with protective covering for storage and identified with labels describing contents.

1. Fabric: For each fabric, color, and pattern installed, provide length equal to 10 percent of amount installed, but no fewer than 10 yards (9 m).
2. Fabric-Wrapped Panel Mounting Devices: Full-size units equal to 5 percent of amount installed, but no fewer than 5 attachment devices.

PART 2 - PRODUCTS

2.1 CORE MATERIALS

2.2 FABRIC-WRAPPED PANEL – AWP-1, AWP-2 & AWP-3

A. Manufacturer basis of design product: Subject to compliance with requirements, provide Conwed Wall Technology Respond A Series or comparable product by one of the following:

1. Acoustical Wall Panel: Decoustics Ltd.
2. HardSide; Kinetics Noise Control, Inc.
3. Owens Corning Wall Technology Acoustical Products.

B. Facing Material: Fabric from same dye lot; colors and patterns as selected by Architect from manufacturer's full range. Basis of design product Guilford of Maine, series Anchorage 2335 or comparable product by one of the following:

1. Maharam
2. Knoll
3. Carnegie

C. Panel Core: Provide the following core material:

1. High Density Perforated Mineral Fiberboard 1” inch nominal core thickness.
2. Colors:
   a. AWP-1: 2839 Lemon
   b. AWP-2: 2079 Graphite

NOT FOR BIDDING PURPOSES

c. AWP-3: 2053 Asteroid

D. Face Layer: Impact-resistant, high-density face layer.

E. Core Overlay: Polyester batting; Manufacturer's standard thickness.

F. Panel Width and Height: As indicated on Drawings.

G. Panel Edge: Resin-hardened, glass-fiber board.

1. Edge Detail: Square.
2. Corner Detail: Square to form continuous profile to match edge detail.

H. Panel Edge and Frame: Extruded-aluminum or zinc-coated, rolled-steel shape.

1. Edge and Corner Detail: Square.

2.3 FABRICATION

A. Fabric-Wrapped Panels: Panel construction consisting of facing material adhered or attached to face, edges and back border of dimensionally stable core; with rigid edges to reinforce panel perimeter against warpage and damage.

1. Mineral Fiber Board: Resin harden areas of core for attachment of mounting devices.

B. Fabric Facing: Stretched straight, on the grain, tight, square, and free from puckers, ripples, wrinkles, sags, blisters, seams, adhesive, or other foreign matter. Applied with visible surfaces fully covered.

1. Where square corners are indicated, tailor corners.
2. Where radius or other non-square corners are indicated, attach facing material so there are no seams or gathering of material.
3. Where fabrics with directional or repeating patterns or directional weave are indicated, mark fabric top and attach fabric in same direction so pattern or weave matches in adjacent panels.

C. Core-Face Layer: Evenly stretched over core face and edges and securely attached to core; free from puckers, ripples, wrinkles, sags.

1. Provide double thickness of overlay at panel edges.

D. Dimensional Tolerances of Finished Units: Plus or minus 1/16 inch (1.6 mm) for the following:

1. Thickness: 1”
2. Overall length and width: as indicated on drawings

E. Mounting Devices: Concealed on back of panel, recommended to support weight of panel, with base-support bracket system where recommended by manufacturer for additional support of panels, and as follows:

1. Adhesive. Use only adhesives that have a VOC content of 70 g/L or less when calculated according to 40 CFR 59, Subpart D (EPA Method 24).

NOT FOR BIDDING PURPOSES

2. Hook-and-loop tape.
3. Impaling clips.
4. Magnetic strip or devices.
5. Metal "Z" Clips: Two-part panel clips, with one part of each clip mechanically attached to back of panel and the other part to wall substrate, designed to allow for panel removal.
6. As recommended by manufacturer.

F. Owner-Furnished Fabric: Provide fabric acceptable to fabric-wrapped panel manufacturer for application indicated. Notify Architect of fabric unacceptability.

PART 3 - EXECUTION

3.1 EXAMINATION

A. Examine fabric, substrates, blocking, and conditions, with Installer present, for compliance with requirements, installation tolerances, and other conditions affecting performance of fabric-wrapped panels.

1. Proceed with installation only after unsatisfactory conditions have been corrected.

3.2 INSTALLATION

A. Wall Panels: Install fabric-wrapped panels in locations indicated with vertical surfaces and edges plumb, top edges level and in alignment with other panels, faces flush, and scribed to fit adjoining work accurately at borders and at penetrations.

B. Ceiling Panels: Install fabric-wrapped panels in locations indicated with surfaces and edges plumb to surface, edges level and in alignment with other panels, faces flush, and scribed to fit adjoining work accurately at borders and at penetrations.

C. Comply with fabric-wrapped panel manufacturer's written instructions for installation of panels using type of concealed mounting accessories indicated or, if not indicated, as recommended by manufacturer. Anchor panels securely to supporting substrate.

D. Match and level fabric pattern and grain among adjacent panels.

E. Installation Tolerances: As follows:

1. Variation from Plumb and Level: Plus or minus 1/16 inch (1.6 mm).
2. Variation of Panel Joints from Hairline: Not more than 1/16 inch (1.6 mm) wide.

3.3 CLEANING

A. Clip loose threads; remove pills and extraneous materials.

B. Clean panels with fabric facing, on completion of installation, to remove dust and other foreign materials according to manufacturer's written instructions.

NOT FOR BIDDING PURPOSES

3.4 PROTECTION

A. Provide final protection and maintain conditions, in a manner acceptable to manufacturer and Installer, to ensure that fabric-wrapped panels are without damage or deterioration at time of Substantial Completion.

B. Replace panels that cannot be cleaned and repaired, in a manner approved by Architect, before time of Substantial Completion.

END OF SECTION 09 77 23

NOT FOR BIDDING PURPOSES

NOT FOR BIDDING PURPOSES

SECTION 09 91 00 – PAINTING

PART 1 - GENERAL

1.1 RELATED DOCUMENTS

A. Drawings and general provisions of the Contract, including General and Supplementary Conditions and Division 1 Specification Sections, apply to this Section.

1.2 SUMMARY

A. This Section includes surface preparation and the application of paint systems on the following exterior substrates:

1. Concrete masonry units (CMU).
2. Gypsum Board
3. Galvanized metal
4. Aluminum (not anodized or otherwise coated).
5. Wood
6. Exterior PVC Trim
7. Fiber Cement Siding
8. Mechanical and electrical work (MEP)

B. Related Sections include the following:

1. Division 3 Sections "Concrete" for sealers of concrete flatwork.
2. Division 5 Sections for shop priming of metal substrates with primers specified in this Section.
3. Division 6 Sections for shop priming carpentry with primers specified in this Section.
4. Division 9 Sections for High Performance Coatings.

1.3 SUBMITTALS

A. Product Data: For each type of product indicated.

B. Samples for Initial Selection: Upon request, for each type of topcoat product indicated.

C. Samples for Verification: For each type of paint system and each color and gloss of topcoat indicated.

1. Submit Samples on rigid backing, 8 inches (200 mm) square.
2. Step coats on Samples to show each coat required for system.
3. Label each coat of each Sample.
4. Label each Sample for location and application area.
5. Label each sample as to date painted.

D. Product List: For each product indicated, include the following:

1. Cross-reference to paint system and locations of application areas. Use same designations indicated on Drawings and in schedules.
2. Printout of current "MPI Approved Products List" for each product category specified in Part 2, with the proposed product highlighted.

1.4 QUALITY ASSURANCE

A. MPI Standards:

1. Products: Complying with MPI standards indicated and listed in "MPI Approved Products List."
2. Preparation and Workmanship: Comply with requirements in "MPI Architectural Painting Specification Manual" for products and paint systems indicated.

B. Mockups: Apply benchmark samples of each paint system indicated and each color and finish selected to verify preliminary selections made under sample submittals and to demonstrate aesthetic effects and set quality standards for materials and execution.

1.5 DELIVERY, STORAGE, AND HANDLING

A. Store materials not in use in tightly covered containers in well-ventilated areas with ambient temperatures continuously maintained at not less than 45 deg F (7 deg C).

1. Maintain containers in clean condition, free of foreign materials and residue.
2. Remove rags and waste from storage areas daily.

1.6 PROJECT CONDITIONS

A. Apply paints only when temperature of surfaces to be painted and ambient air temperatures are between 50 and 95 deg. F (10 and 35 deg. C).

B. Do not apply paints in snow, rain, fog, or mist; when relative humidity exceeds 85 percent; at temperatures less than 5 deg. F (3 deg. C) above the dew point; or to damp or wet surfaces.

1.7 EXTRA MATERIALS

A. Furnish extra materials described below that are from same production run (batch mix) as materials applied and that are packaged for storage and identified with labels describing contents. Furnish an additional 1 percent, but not less than 1 gal. of each material and color applied.

PART 2 - PRODUCTS

2.1 MANUFACTURERS

A. Available Manufacturers: Subject to compliance with requirements, manufacturers offering products that may be incorporated into the Work include, but are not limited to, the following:

NOT FOR BIDDING PURPOSES

B. Manufacturers: Subject to compliance with requirements, provide products by one of the following:

1. Sherwin-Williams Company
2. Benjamin Moore & Co.
3. Duron, Inc.
4. Finnaren & Haley Inc (F&H)
5. M.A.B. Paints.
6. Porter Paints.
7. PPG Pittsburg Paints

2.2 PAINT, GENERAL

A. Material Compatibility:

1. Provide materials for use within each paint system that are compatible with one another and substrates indicated, under conditions of service and application as demonstrated by manufacturer, based on testing and field experience.
2. For each coat in a paint system, provide products recommended in writing by manufacturers of topcoat for use in paint system and on substrate indicated.

Colors: Match Architect's samples or as indicated in a color schedule below:

1. P-1: Sherwin Williams # SW7637 Oyster White
2. P-2: Sherwin Williams # SW7066 Gray Matters
3. P-3: Sherwin Williams # SW2831 Classical Gold
4. P-4: Sherwin Williams # TBD
5. P-5: Sherwin Williams # SW7588 Show Stopper
6. P-6: Sherwin Williams # SW6516 Down Pour
7. P-7: Sherwin Williams # SW6430 Great Green
8. P-8: Sherwin Williams # SW6551 Purple Passage
9. P-9: Sherwin Williams # SW6643 Yam
10. P-10: Sherwin Williams # SW9019 Golden Plumeria
11. P-11 Sherwin Williams # SW7044 Amazing Gray
12. P-12 Sherwin Williams # SW7047 Porpoise
13. P-13 Sherwin Williams # SW7007 Ceiling Bright White

2.3 BLOCK FILLERS

A. Interior/Exterior Latex Block Filler: MPI #4.

B. Epoxy Block Filler: MPI #116.

2.4 PRIMERS/SEALERS

A. Alkali-Resistant Primer: MPI #3: Factory-formulated water based, alkali-resistant acrylic-latex interior primer for interior plaster applications

B. Exterior Primer under Acrylic Finishes: Factory-formulated acrylic-based primer for exterior application. Provide breathable primer at masonry and stucco locations.

NOT FOR BIDDING PURPOSES

1. Benjamin Moore; Moore's IMC Acrylic Metal Primer No. M04: Applied at a dry film thickness of not less than 2.0 mils.
2. M. A. B. Paint; Rust-O-Lastic Hydro-Prime II Acrylic (DTM) Maintenance Primer 073-189: Applied at a dry film thickness of not less than 2.0 mils.

C. Interior Latex Primer/Sealer: MPI #50.

D. Interior Alkyd Primer/Sealer: MPI #45.

E. Wood-Knot Sealer: Sealer recommended in writing by topcoat manufacturer for use in paint systems indicated.

2.5 METAL PRIMERS

A. Alkyd Anticorrosive Metal Primer: MPI #79.

B. Waterborne Galvanized-Metal Primer: MPI #134.

C. Quick-Drying Primer for Aluminum: MPI #95.

D. Rust-Inhibitive Primer (Water Based): MPI #107.

E. Vinyl Wash Primer: MPI #80.

2.6 WOOD PRIMERS

A. Exterior Latex Wood Primer: MPI #6.

B. Exterior Alkyd Wood Primer: MPI #5.

C. Interior Latex-Based Wood Primer: MPI #39.

2.7 EPOXY PAINT

A. Water-Based Epoxy (Interior and Exterior): MPI #215. A water based, two component epoxy type, semi-gloss finish coating. Subject to compliance with requirements, provide one of the following:

1. Benjamin Moore; M43/M44- 84 Acrylic Epoxy Semi-Gloss.
2. M. A. B. Paint; Ply-Tile 530 Water-Reducible Acrylic Epoxy Semi-Gloss.

B. Water-Based Epoxy (Interior and Exterior): MPI #115. A water based, two component epoxy type, Gloss finish coating. Subject to compliance with requirements, provide one of the following:

1. Benjamin Moore & Co.; Acrylic Epoxy Gloss "A", Hardener "B", M43/M44.
2. ICI Paints; Devoe Coatings, Tru Glaze WB Epoxy Gloss Coating, 4408/4418
3. Porter Paints; Dura-Glaze WB, Gloss Epoxy, 9371.
4. PPG Architectural Finishes, Inc.; Aquapon, Waterborne Epoxy, 98-1/98-98.

NOT FOR BIDDING PURPOSES

5. Sherwin-Williams Company (The); Industrial & Marine, Water Based Catalyzed Epoxy, B70W Series.

2.8 ALKYD PAINTS

A. Exterior Alkyd Enamel (Flat): MPI #8 (Gloss Level 1).

B. Exterior Alkyd Enamel (Semigloss): MPI #94 (Gloss Level 5).

C. Exterior Alkyd Enamel (Gloss): MPI #9 (Gloss Level 6).

D. Interior Alkyd (Flat): MPI #49 (Gloss Level 1).

E. Interior Alkyd (Eggshell): MPI #51 (Gloss Level 3).

F. Interior Alkyd (Semigloss): MPI #47 (Gloss Level 5).

G. Interior Alkyd (Gloss): MPI #48 (Gloss Level 6).

2.9 ACRYLIC-RESIN COATING.

A. Breathable cement masonry paint formulated with colorfast pigments for use over cement plaster or masonry substrates. Include manufacturer's recommended primers. Coating shall be mildew resistant and breathable with perm rating of not less than 15 per ASTM E 96.

1. Thoro Products, "Thorosheen" or equal.
2. Primer: Thoroseal 1000.
3. Texture: smooth

2.10 LATEX PAINTS

A. Interior Latex (Flat): MPI #53 (Gloss Level 1).

B. Interior Latex (Low Sheen): MPI #44 (Gloss Level 2).

C. Interior Latex (Eggshell): MPI #52 (Gloss Level 3).

D. Interior Latex (Satin): MPI #43 (Gloss Level 4).

E. Interior Latex (Semigloss): MPI #54 (Gloss Level 5).

F. Interior Latex (Gloss): MPI #114 (Gloss Level 6, except minimum gloss of 65 units at 60 deg).

G. Exterior Acrylic Latex (Flat): MPI #10 (Gloss Level 1).

H. Exterior Acrylic Latex (Semigloss): MPI #11 (Gloss Level 5).

NOT FOR BIDDING PURPOSES

2.11 DRY FOG/FALL COATINGS

A. Flat, Latex Dry Fog/Fall (MPI #118): Provide a water-based, emulsion-type, fast-drying coating used on overhead metal and other surfaces for application methods by airless and/or conventional spray equipment. Overspray will dry to a sweepable powder over a short distance for easier clean up.

B. Flat Dry-Fall for Galvanized Steel (water based) MPI # 133: Provide a waterborne coating, designed for direct application to cleaned, interior overhead galvanized metal surfaces, for application methods by airless and/or conventional spray equipment. Overspray will dry to a sweepable powder over a short distance for easier clean up.

2.12 Decorative Metallic Coating

A. Ready mixed oil modified synthetic resin vehicle Aluminum pigmentation: Acrylic type vehicle, non-leafing aluminum pigment, ready mixed.

PART 3 - EXECUTION

3.1 EXAMINATION

A. Examine substrates and conditions, with Applicator present, for compliance with requirements for maximum moisture content and other conditions affecting performance of work.

B. Maximum Moisture Content of Substrates: When measured with an electronic moisture meter as follows:

1. Concrete: 12 percent.
2. Masonry (Clay and CMU): 12 percent.
3. Wood: 15 percent.
4. Plaster: 12 percent.
5. Gypsum Board: 12 percent.

C. Verify suitability of substrates, including surface conditions and compatibility with existing finishes and primers.

D. Begin coating application only after unsatisfactory conditions have been corrected and surfaces are dry.

1. Beginning coating application constitutes Contractor's acceptance of substrates and conditions.

3.2 PREPARATION

A. Comply with manufacturer's written instructions and recommendations in "MPI Architectural Painting Specification Manual" applicable to substrates and paint systems indicated.

NOT FOR BIDDING PURPOSES

B. Remove plates, machined surfaces, and similar items already in place that are not to be painted. If removal is impractical or impossible because of size or weight of item, provide surface-applied protection before surface preparation and painting.

1. After completing painting operations, use workers skilled in the trades involved to reinstall items that were removed. Remove surface-applied protection if any.
2. Do not paint over labels of independent testing agencies or equipment name, identification, performance rating, or nomenclature plates.

C. Clean substrates of substances that could impair bond of paints, including dirt, oil, grease, and incompatible paints and encapsulants.

1. Remove incompatible primers and re-prime substrate with compatible primers as required to produce paint systems indicated.
2. Use abrasive blast-cleaning methods if recommended by paint manufacturer.
3. Determine alkalinity and moisture content of surfaces by performing appropriate tests. If surfaces are sufficiently alkaline to cause the finish paint to blister and burn, correct this condition before application. Do not paint surfaces if moisture content exceeds that permitted in manufacturer's written instructions.
4. Clean concrete floors to be painted with a 5 percent solution of muriatic acid or other etching cleaner. Flush the floor with clean water to remove acid, neutralize with ammonia, rinse, allow to dry, and vacuum before painting

D. Concrete Masonry Substrates: Remove efflorescence and chalk. Do not paint surfaces if moisture content or alkalinity of surfaces to be painted exceeds that permitted in manufacturer's written instructions.

E. Steel Substrates: Remove rust and loose mill scale. Clean using methods recommended in writing by paint manufacturer.

F. Ferrous Metals: Clean ungalvanized ferrous-metal surfaces that have not been shop coated; remove oil, grease, dirt, loose mill scale, and other foreign substances. Use solvent or mechanical cleaning methods that comply with SSPC's recommendations.

1. Blast steel surfaces clean as recommended by paint system manufacturer and according to SSPC-SP 6/NACE No. 3.
2. Treat bare and sandblasted or pickled clean metal with a metal treatment wash coat before priming.
3. Touch up bare areas and shop-applied prime coats that have been damaged. Wire-brush, clean with solvents recommended by paint manufacturer, and touch up with same primer as the shop coat.

G. Galvanized-Metal Substrates: Remove grease and oil residue from galvanized sheet metal fabricated from coil stock by mechanical methods to produce clean, lightly etched surfaces that promote adhesion of subsequently applied paints.

H. Wood Substrates:

1. Scrape and clean knots, and apply coat of knot sealer before applying primer.
2. Sand surfaces that will be exposed to view, and dust off.
3. Prime edges, ends, faces, undersides, and backsides of wood.

NOT FOR BIDDING PURPOSES

4. After priming, fill holes and imperfections in the finish surfaces with putty or plastic wood filler. Sand smooth when dried.

I. Plaster Substrates: Do not begin paint application until plaster is fully cured and dry.

3.3 APPLICATION

A. Apply paints according to manufacturer's written instructions.

1. Use applicators and techniques suited for paint and substrate indicated.
2. Paint surfaces behind movable items same as similar exposed surfaces. Before final installation, paint surfaces behind permanently fixed items with prime coat only.

B. Tint each undercoat a lighter shade to facilitate identification of each coat if multiple coats of same material are to be applied. Tint undercoats to match color of topcoat, but provide sufficient difference in shade of undercoats to distinguish each separate coat.

C. If undercoats or other conditions show through topcoat, apply additional coats until cured film has a uniform paint finish, color, and appearance.

D. Apply paints to produce surface films without cloudiness, spotting, holidays, laps, brush marks, roller tracking, runs, sags, ropiness, or other surface imperfections. Cut in sharp lines and color breaks.

E. Application Procedures: Apply paints and coatings by brush, roller, spray, or other applicators according to manufacturer's written instructions.

1. Brushes: Use brushes best suited for type of material applied. Use brush of appropriate size for surface or item being painted.
2. Rollers: Use rollers of carpet, velvet-back, or high-pile sheep's wool as recommended by manufacturer for material and texture required.
3. Spray Equipment: Use airless spray equipment with orifice size as recommended by manufacturer for material and texture required.

F. Minimum Coating Thickness: Apply paint materials no thinner than manufacturer's recommended spreading rate to achieve dry film thickness indicated. Provide total dry film thickness of the entire system as recommended by manufacturer.

G. Overhead Structure and Exposed Ceiling Steel and Galvanized-Metal Substrates:

1. Prep substrate as required minimum. Repair existing primed surfaces.
2. Galvanized surface shall be prepared by either solvent cleaning and test for chromate passivation, with an SSPC SP 7 Brush-off blast cleaning if required or chemical-etching cleaners may be substituted for solvent washing and SSPC-SP 7 cleaning.
3. Apply primer coat to unprimed surfaces.
4. Paint exposed metal deck, structural steel, conduit, un-insulated ductwork and piping, and other mechanical and electrical work in finish and occupied rooms. Protect surfaces not to be painted. Dry-Fall painting shall not be required in mechanical-electrical equipment, custodial, storage and similar rooms.

NOT FOR BIDDING PURPOSES

H. Exterior Mechanical and Electrical Work: Painting of mechanical and electrical work is limited to items exposed on exterior of building, excluding roof mounted mechanical and electrical work. Items to be painted include, but are not limited to, the following:

1. Uninsulated metal and plastic piping, including hangers and supports.
2. Louvers, grilles, vents unless prefinished.
3. Mechanical equipment that is indicated to have a factory-primed finish for field painting.
4. Conduit and junction boxes.
5. Electrical equipment that is indicated to have a factory-primed finish for field painting.
6. Do not paint unless noted otherwise.
   a. Prefinished mechanical equipment and items
   b. pipe and duct insulation
   c. Prefinished electrical devices and/or cover plates
   d. Electrical fixtures
   e. Nameplaces
   f. Moving parts
7. Touch up damaged finishes, including field applied and pre-finished surfaces.

I. Interior Mechanical and Electrical Work: Unless otherwise noted, painting of mechanical and electrical work is limited to items exposed to view in finished spaces as defined herein.

1. Locations where MEP work to be field painted include following

   a. Occupied or Finish spaces are to include all rooms and other spaces with suspended, drywall or plaster ceiling, including toilet rooms and storage rooms. Also stairs, classroom and other rooms used by students
   b. Occupied or Finished Spaces with ceilings – Paint all exposed MEP work as described herein exposed to view.
   c. Occupied or Finished Spaces without ceilings - Paint all exposed MEP work as described herein exposed to view, including the structure above - unless noted otherwise.
   d. Occupied or Finished Spaces without ceilings (i.e., Egress Stairs, Gym, and Stage house), partial ceilings, and where indicated.
   e. Unless noted otherwise, painting of MEP work is not required of Unfinished or unoccupied spaces include mechanical and electrical equipment rooms (rooms whose primary purpose is to house HVAC or other MEP equipt), elevator equipment rooms, IT equipt and MDF rooms, storage rooms without finish ceilings, shafts and chases.

2. Items to be painted include, but are not limited to, the following:

   a. Duct, equipment, and pipe insulation having cotton or canvas insulation covering or other paintable jacket material.
   b. Uninsulated metal and plastic piping
   c. Piping hangers and supports.
   d. Louvers grilles vents unless prefinished
   e. Mechanical equipment that is indicated to have a factory-primed finish for field painting.
   f. Electrical equipment that is indicated to have a factory-primed finish for field painting.
   g. Conduit and junction boxes, including metallic and PVC materials, fire alarm, BAS, attachments <u>exposed and semi-exposed to view</u> in finish areas

NOT FOR BIDDING PURPOSES

h. Electrical and control panels in finish areas and exposed to view

3. Do not paint, unless noted otherwise.

a. Prefinished mechanical equipment and items
b. pipe and duct insulation
c. Prefinished electrical devices and/or cover plates
d. Electrical fixtures
e. Nameplaces
f. Moving parts
g. Sight exposed interior of ductwork and other equipment

4. Touch up damaged finishes, including field applied and pre-finished surfaces.

3.4 CLEANING AND PROTECTION

A. At end of each workday, remove rubbish, empty cans, rags, and other discarded materials from Project site.

B. After completing paint application, clean spattered surfaces. Remove spattered paints by washing, scraping, or other methods. Do not scratch or damage adjacent finished surfaces.

C. Protect work of other trades against damage from paint application. Correct damage to work of other trades by cleaning, repairing, replacing, and refinishing, as approved by Architect, and leave in an undamaged condition.

D. At completion of construction activities of other trades, touch up and restore damaged or defaced painted surfaces.

3.5 EXTERIOR PAINTING SCHEDULE

A. Steel Substrates:

1. Alkyd System: MPI EXT 5.1D.

a. Prime Coat: Alkyd anticorrosive metal primer.
b. Intermediate Coat: Exterior alkyd enamel matching topcoat.
c. Topcoat: Exterior alkyd enamel (Semi-gloss unless noted otherwise)

2. Alkyd System: MPI EXT 5.3B.

a. Prime Coat: Cementitious galvanized-metal primer.
b. Intermediate Coat: Exterior alkyd enamel matching topcoat.
c. Topcoat: Exterior alkyd enamel (Semi-gloss unless noted otherwise)

3.6 INTERIOR PAINTING SCHEDULE

A. CMU Substrates:

NOT FOR BIDDING PURPOSES

1. Latex System: MPI INT 4.2A.

   a. Prime Coat: Interior/exterior latex block filler.

   b. Intermediate Coat: Interior latex matching topcoat.
   c. Topcoat: Interior latex (eggshell unless otherwise noted)

2. Water-Based Epoxy Coating System (Gloss):

   a. Block Filler: 2 coats Epoxy block filler, MPI #116.
   b. Intermediate Coat: Water-based epoxy (interior and exterior), MPI #115.
   c. Topcoat: Water-based epoxy (interior and exterior), MPI #115.

3. Water-Based Epoxy Coating System (Semi-Gloss):

   a. Block Filler: 2 coats Epoxy block filler, MPI #116.
   b. Intermediate Coat: Water-based epoxy (interior and exterior), MPI #115.
   c. Topcoat: Water-based epoxy (interior and exterior), MPI #215.

B. Steel Substrates:

1. Alkyd System: MPI INT 5.1E.

   a. Prime Coat: Quick-drying alkyd metal primer where required
   b. Intermediate Coat: Interior alkyd matching topcoat.
   c. Topcoat: Interior alkyd (Semi-gloss unless noted otherwise)

2. Water-Based Dry-Fall System: MPI INT 5.1C.

   a. Prime Coat: Quick-drying alkyd metal primer where required.
   b. Topcoat: Waterborne dry fall.

C. Galvanized-Metal Substrates:

1. Water-Based Dry-Fall System: MPI INT 5.3H.

   a. Prime Coat: Waterborne dry fall where required
   b. Topcoat: Waterborne dry fall.

2. Alkyd System: MPI INT 5.3C.

   a. Prime Coat: Cementitious galvanized-metal primer.
   b. Intermediate Coat: Interior alkyd matching topcoat.
   c. Topcoat: Interior alkyd (Semi-gloss unless noted otherwise.)

D. Wood Substrates, Traffic Surfaces:

1. Alkyd Floor Enamel System: MPI INT 6.5A.

   a. Prime Coat: Exterior/interior alkyd floor enamel
   b. Intermediate Coat: Exterior/interior alkyd floor enamel (gloss).
   c. Topcoat: Exterior/interior alkyd floor enamel (Gloss).

NOT FOR BIDDING PURPOSES

E. Gypsum Board Substrates:

1. Latex System: MPI INT 9.2A.

a. Prime Coat: Interior latex primer/sealer
b. Intermediate Coat: Interior latex matching topcoat.
c. Topcoat: Interior latex. (Refer to finish schedule for gloss level.)

END OF SECTION 09 91 00

NOT FOR BIDDING PURPOSES

SECTION 10 11 00

VISUAL DISPLAY UNITS

PART 1 - GENERAL

1.1 RELATED DOCUMENTS

A. Drawings and general provisions of the Contract, including General and Supplementary Conditions and Division 01 Specification Sections, apply to this Section.

1.2 SUMMARY

A. Section Includes:

1. Visual display board assemblies.
2. Marker wall.

1.3 PREINSTALLATION MEETINGS

A. Preinstallation Conference: Conduct conference at Project site.

1.4 ACTION SUBMITTALS

A. Product Data: For each type of product.

1. Include construction details, material descriptions, dimensions of individual components and profiles, finishes, and accessories for visual display units.

B. Shop Drawings: For visual display units.

1. Include plans, elevations, sections, details, and attachment to other work.
2. Show locations of panel joints.
3. Show locations and layout of special-purpose graphics.
4. Include sections of typical trim members.

C. Samples for Verification: For each type of visual display unit indicated.

1. Visual Display Panel: Not less than 8-1/2 by 11 inches, with facing, core, and backing indicated for final Work. Include one panel for each type, color, and texture required.
2. Trim: 6-inch-long sections of each trim profile.
3. Accessories: Full-size Sample of each type of accessory.

D. Product Schedule: For visual display units. Use same designations indicated on Drawings.

1.5 INFORMATIONAL SUBMITTALS

A. Qualification Data: For qualified Installer.

NOT FOR BIDDING PURPOSES

B. Product Test Reports: Based on evaluation of comprehensive tests performed by a qualified testing agency, for surface-burning characteristics of tackboards.

C. Sample Warranties: For special warranties.

1.6 CLOSEOUT SUBMITTALS

A. Maintenance Data: For visual display units to include in maintenance manuals.

1.7 QUALITY ASSURANCE

A. Installer Qualifications: An entity that employs installers and supervisors who are trained and approved by manufacturer.

1.8 DELIVERY, STORAGE, AND HANDLING

A. Deliver factory-fabricated visual display units completely assembled in one piece. If dimensions exceed maximum manufactured unit size, or if unit size is impracticable to ship in one piece, provide two or more pieces with joints in locations indicated on approved Shop Drawings.

1.9 PROJECT CONDITIONS

A. Environmental Limitations: Do not deliver or install visual display units until spaces are enclosed and weathertight, wet-work in spaces is complete and dry, work above ceilings is complete, and temporary HVAC system is operating and maintaining ambient temperature and humidity conditions at occupancy levels during the remainder of the construction period.

1.10 WARRANTY

A. Special Warranty for Porcelain-Enamel Face Sheets: Manufacturer agrees to repair or replace porcelain-enamel face sheets that fail in materials or workmanship within specified warranty period.

1. Failures include, but are not limited to, the following:

a. Surfaces lose original writing and erasing qualities.
b. Surfaces exhibit crazing, cracking, or flaking.

2. Warranty Period: 50 years from date of Substantial Completion.

PART 2 - PRODUCTS

2.1 MANUFACTURERS

A. Source Limitations: Obtain each type of visual display unit from single source from single manufacturer.

NOT FOR BIDDING PURPOSES

2.2 PERFORMANCE REQUIREMENTS

A. Surface-Burning Characteristics: Comply with ASTM E 84; testing by a qualified testing agency. Identify products with appropriate markings of applicable testing agency.

1. Flame-Spread Index: 25 or less.
2. Smoke-Developed Index: 50 or less.

2.3 VISUAL DISPLAY BOARD ASSEMBLY

A. Basis of Design Product Subject to compliance with requirements, provide products by Claridge Products and Equipment, Inc., or comparable product by one of the following:

1. Marsh Industries.
2. Newline Products.

B. Visual Display Board Assembly: Factory fabricated.

1. Assembly: Markerboard and tackboard.
2. Corners: Square.
3. Width: As indicated on Drawings and in schedule.
4. Height: As indicated on Drawings and in schedule.
5. Mounting Method: Direct to wall.

C. Markerboard Panel: Porcelain-enamel-faced markerboard panel on core indicated.

1. Color: As selected by Architect from full range of industry colors.

D. Tackboard Panel: Vinyl-fabric-faced tackboard panel on core indicated.

1. Color and Pattern: Refer to Section 090600.

E. Aluminum Frames and Trim: Fabricated from not less than 0.062-inch-thick, extruded aluminum; standard size and shape.

1. Aluminum Finish: Clear anodic finish.

F. Joints: Make joints only where total length exceeds maximum manufactured length. Fabricate with minimum number of joints.

G. Combination Assemblies: Provide manufacturer's standard exposed trim between abutting sections of visual display panels.

H. Chalktray: Manufacturer's standard; continuous.

1. Box Type: Extruded aluminum with slanted front, grooved tray, and cast-aluminum end closures.

2.4 MARKER WALL

A. Basis of Design Product Subject to compliance with requirements, provide Claridge Products and Equipment, Inc., MW2.

NOT FOR BIDDING PURPOSES

B. Mounted LCS (Porcelain Enamel Steel Skin) panels mounted on 7/16-inch MDF with moisture barrier back and alum spline joint -No. 1016 perimeter trim and 16A adhesive.

2.5 DISPLAY RAILS

A. Aluminum Display Rail: Manufacturer's standard, extruded-aluminum display rail with tackable insert, and continuous paper holder, designed to hold accessories.

B. Size: As indicated on Drawings and in Spec Schedule.

C. End Stops: One at each end of map and display rails.

D. Accessories:

1. Metal Map Hooks: One for each 3 feet of map rail or fraction thereof.
2. Flag Holders: Include one flag holder per room.

2.6 MARKERBOARD PANELS

A. Porcelain-Enamel Markerboard Panels: Balanced, high-pressure, factory-laminated markerboard assembly of three-ply construction, consisting of moisture-barrier backing, core material, and porcelain-enamel face sheet with matte finish. Laminate panels under heat and pressure with manufacturer's standard, flexible waterproof adhesive.

1. Face Sheet Thickness: Manufacturer’s standard for product selected.
2. Manufacturer's Standard Core: Minimum 1/4-inch-thick, with manufacturer's standard moisture-barrier backing.
3. Laminating Adhesive: Manufacturer's standard moisture-resistant thermoplastic type.

2.7 TACKBOARD PANELS

A. Tackboard Panels:

1. Facing: Vinyl fabric.
2. Core: 1/16-inch cork over 3/8-inch board as selected.

B. Tack Strips:

1. Basis of Design Product: Claridge; EDR Exhibit Rail.
2. 3 inches wide with Fabricork tackable insert.
3. Mounts with 3/4-inch flat head screws (furnished) or with your double-sided tape.

2.8 MARKER WALLS

A. Marker Walls:

1. Facing: Porcelain on steel laminated on 7/16-inch MDF joined with steel splines.
2. Core: 1/16-inch cork over 3/8-inch board as selected.

NOT FOR BIDDING PURPOSES

2.9 MATERIALS

A. Porcelain-Enamel Face Sheet: PEI-1002, with face sheet manufacturer's standard two-or three-coat process.

B. Natural-Cork Sheet: Seamless, single-layer, compressed fine-grain cork sheet; bulletin board quality; face sanded for natural finish.

C. Vinyl Fabric: Mildew resistant, washable, complying with FS CCC-W-408D, Type II, weighing not less than 13 oz./sq. yd.; with surface-burning characteristics indicated.

D. Medium-Density Fiberboard: ANSI A208.2, Grade 130.

E. Extruded Aluminum: ASTM B 221, Alloy 6063.

F. Adhesives for Field Application: Mildew-resistant, nonstaining adhesive for use with specific type of panels, sheets, or assemblies; and for substrate application; as recommended in writing by visual display unit manufacturer.

2.10 GENERAL FINISH REQUIREMENTS

A. Comply with NAAMM's "Metal Finishes Manual for Architectural and Metal Products" for recommendations for applying and designating finishes.

B. Protect mechanical finishes on exposed surfaces from damage by applying a strippable, temporary protective covering before shipping.

C. Appearance of Finished Work: Noticeable variations in same piece are unacceptable. Variations in appearance of adjoining components are acceptable if they are within the range of approved Samples and are assembled or installed to minimize contrast.

2.11 ALUMINUM FINISHES

A. Clear Anodic Finish: AAMA 611, AA-M12C22A31, Class II, 0.010 mm or thicker.

PART 3 - EXECUTION

3.1 EXAMINATION

A. Examine substrates and conditions, with Installer present, for compliance with requirements for installation tolerances, surface conditions of wall, and other conditions affecting performance of the Work.

B. Examine roughing-in for electrical power systems to verify actual locations of connections before installation of motorized, sliding visual display units.

C. Examine walls and partitions for proper preparation and backing for visual display units.

D. Examine walls and partitions for suitable framing depth where sliding visual display units will be installed.

NOT FOR BIDDING PURPOSES

E. Proceed with installation only after unsatisfactory conditions have been corrected.

3.2 PREPARATION

A. Comply with manufacturer's written instructions for surface preparation.

B. Clean substrates of substances, such as dirt, mold, and mildew, that could impair the performance of and affect the smooth, finished surfaces of visual display boards.

C. Prepare surfaces to achieve a smooth, dry, clean surface free of flaking, unsound coatings, cracks, defects, projections, depressions, and substances that will impair bond between visual display units and wall surfaces.

D. Prime wall surfaces indicated to receive visual display units and as recommended in writing by visual display unit manufacturer.

E. Prepare recesses for sliding visual display units as required by type and size of unit.

3.3 INSTALLATION

A. General: Install visual display surfaces in locations and at mounting heights indicated on Drawings, or if not indicated, at heights indicated below. Keep perimeter lines straight, level, and plumb. Provide grounds, clips, backing materials, adhesives, brackets, anchors, trim, and accessories necessary for complete installation.

B. Field-Assembled Visual Display Board Assemblies: Coordinate field-assembled units with grounds, trim, and accessories indicated. Join parts with a neat, precision fit.

C. Adhered Factory-Fabricated Visual Display Board Assemblies: Adhere to wall surfaces with egg-size adhesive gobs at 16 inches o.c., horizontally and vertically.

D. Mechanically Attached Factory-Fabricated Visual Display Board Assemblies: Attach concealed clips, hangers, and grounds to wall surfaces and to visual display board assemblies with fasteners at not more than 16 inches o.c. Secure tops and bottoms of boards to walls.

3.4 CLEANING AND PROTECTION

A. Clean visual display units according to manufacturer's written instructions. Attach one removable cleaning instructions label to visual display unit in each room.

B. Touch up factory-applied finishes to restore damaged or soiled areas.

C. Cover and protect visual display units after installation and cleaning.

END OF SECTION 10 11 00

NOT FOR BIDDING PURPOSES

NOT FOR BIDDING PURPOSES

SECTION 10 14 16

PLAQUES

PART 1 - GENERAL

1.1 RELATED DOCUMENTS

A. Drawings and general provisions of the Contract, including General and Supplementary Conditions and Division 01 Specification Sections, apply to this Section.

1.2 SUMMARY

A. Section includes cast bronze plaques.

1.3 ACTION SUBMITTALS

A. Product Data: For each type of product.

B. Shop Drawings: For plaques.

1. Include fabrication and installation details and attachments to other work.
2. Show plaque mounting heights, locations of supplementary supports to be provided by other installers, and accessories.
3. Show message list, typestyles, graphic elements, including raised characters and Braille, and layout for each plaque at least half size.

C. Samples for Initial Selection: For each type of plaque, exposed component, and exposed finish.

1. Include representative Samples of available typestyles and graphic symbols.

D. Product Schedule: For plaques. Use same designations indicated on Drawings or specified.

1.4 INFORMATIONAL SUBMITTALS

A. Qualification Data: For Installer and manufacturer.

B. Sample Warranty: For special warranty.

1.5 CLOSEOUT SUBMITTALS

A. Maintenance Data: For plaques to include in maintenance manuals.

1.6 QUALITY ASSURANCE

A. Installer Qualifications: Manufacturer of products.

1.7 WARRANTY

A. Special Warranty: Manufacturer agrees to repair or replace components of plaques that fail in materials or workmanship within specified warranty period.

1. Failures include, but are not limited to, the following:

a. Deterioration of finishes beyond normal weathering.
b. Deterioration of embedded graphic image.

2. Warranty Period: Five years from date of Substantial Completion.

PART 2 - PRODUCTS

2.1 PERFORMANCE REQUIREMENTS

A. Accessibility Standard: Comply with applicable provisions in the ABA standards of the Federal agency having jurisdiction and ICC A117.1.

2.2 PLAQUES

A. Cast Plaque: Cast-metal plaque with background texture, border, and characters having uniform faces, sharp corners, and precisely formed lines and profiles; and as follows:

1. Manufacturers: Subject to compliance with requirements, provide products by one of the following:

a. A.R.K. Ramos.
b. Matthews International Corporation; Bronze Division.
c. Metal Arts.
d. Metallic Arts.
e. Zimmerman Foundries.

2. Plaque Material: Cast bronze.
3. Plaque Thickness: 0.50 inch.
4. Finishes:

a. Integral Metal Finish: As selected by Architect from full range of industry finishes.
b. Baked-Enamel or Powder-Coat Finish: Manufacturer's standard, in color as selected by Architect from manufacturer's full range.
c. Overcoat: Manufacturer's standard baked-on clear coating.

5. Background Texture: As selected by Architect from manufacturer's full range.
6. Integrally Cast Border Style: Square single line, polished.
7. Applied Frame Material, Style, and Finish: As indicated on Drawings.
8. Mounting: Rosette-head through fasteners.
9. Text and Typeface: Schoolbook Bold.

NOT FOR BIDDING PURPOSES

2.3 MATERIALS

A. Bronze Castings: ASTM B 584, alloy recommended by manufacturer and finisher for finish indicated.

B. Bronze Plate: ASTM B 36/B 36M, alloy recommended by manufacturer and finisher for finish indicated.

2.4 ACCESSORIES

A. Fasteners and Anchors: Manufacturer's standard as required for secure anchorage of plaques, noncorrosive and compatible with each material joined, and complying with the following:

1. Use concealed fasteners and anchors unless indicated to be exposed.
2. Exposed Metal-Fastener Components, General:

   a. Fabricated from same basic metal and finish of fastened metal unless otherwise indicated.
   b. Fastener Heads: For nonstructural connections, use flathead or oval countersunk screws and bolts with tamper-resistant allen-head, spanner-head or one-way-head slots unless otherwise indicated.

3. Plaque Mounting Fasteners:

   a. Concealed Studs: Concealed (blind), threaded studs welded or brazed to back of plaque, screwed into back of plaque, or screwed into tapped lugs cast integrally into back of plaque unless otherwise indicated.
   b. Through Fasteners: Exposed metal fasteners matching plaque finish, with type of head indicated, installed in predrilled holes.

B. Adhesive: As recommended by plaque manufacturer.

C. Bituminous Paint: Cold-applied asphalt emulsion complying with ASTM D 1187/D 1187M.

2.5 FABRICATION

A. General: Provide manufacturer's standard plaques according to requirements indicated.

1. Preassemble plaques in the shop to greatest extent possible. Disassemble plaques only as necessary for shipping and handling limitations. Clearly mark units for reassembly and installation; apply markings in locations concealed from view after final assembly.
2. Mill joints to a tight, hairline fit. Form assemblies and joints exposed to weather to resist water penetration and retention.
3. Comply with AWS for recommended practices in welding and brazing. Provide welds and brazes behind finished surfaces without distorting or discoloring exposed side. Clean exposed welded and brazed connections of flux, and dress exposed and contact surfaces.
4. Conceal connections if possible; otherwise, locate connections where they are inconspicuous.
5. Provide rabbets, lugs, and tabs necessary to assemble components and to attach to existing work. Drill and tap for required fasteners. Use concealed fasteners where possible; use exposed fasteners that match plaque finish.
6. Castings: Fabricate castings free of warp, cracks, blowholes, pits, scale, sand holes, and other defects that impair appearance or strength. Grind, wire brush, sandblast, and buff castings to remove seams, gate marks, casting flash, and other casting marks before finishing.

NOT FOR BIDDING PURPOSES

B. Brackets: Fabricate brackets, fittings, and hardware for bracket-mounted plaques to suit plaque construction and mounting conditions indicated. Modify manufacturer's standard brackets as required.

1. Aluminum Brackets: Factory finish brackets with baked-enamel or powder-coat finish to match Architect's sample color unless otherwise indicated.

2.6 GENERAL FINISH REQUIREMENTS

A. Protect mechanical finishes on exposed surfaces from damage by applying a strippable, temporary, protective covering before shipping.
B. Appearance of Finished Work: Noticeable variations in same piece are not acceptable. Variations in appearance of adjoining components are acceptable if they are within the range of approved Samples and are assembled or installed to minimize contrast.
C. Directional Finishes: Run grain with long dimension of each piece and perpendicular to long dimension of finished trim or border surface unless otherwise indicated.
D. Organic, Anodic, and Chemically Produced Finishes: Apply to formed metal after fabrication but before applying contrasting polished finishes on raised features unless otherwise indicated.

2.7 CLEAR ORGANIC COATING FOR COPPER-ALLOY FINISHES

A. Clear Organic Coating: Clear, waterborne, air-drying, acrylic lacquer called "Incralac"; specially developed for coating copper-alloy products; consisting of a solution of methyl methacrylate copolymer with benzotriazole to prevent breakdown of the film in UV light; shop applied in two uniform coats according to manufacturer's written instructions, with interim drying between coats and without runs or other surface imperfections, to a total dry film thickness of 1 mil.

PART 3 - EXECUTION

3.1 EXAMINATION

A. Examine substrates, areas, and conditions, with Installer present, for compliance with requirements for installation tolerances and other conditions affecting performance.

B. Verify that plaque-support surfaces are within tolerances to accommodate plaques without gaps or irregularities between backs of plaques and support surfaces unless otherwise indicated.

C. Proceed with installation only after unsatisfactory conditions have been corrected.

3.2 INSTALLATION

A. General: Install plaques using mounting methods indicated and according to manufacturer's written instructions.

1. Install plaques level, plumb, true to line, and at locations and heights indicated, with plaque surfaces free of distortion and other defects in appearance.
2. Install plaques so they do not protrude or obstruct according to the accessibility standard.
3. Before installation, verify that plaque surfaces are clean and free of materials or debris that would impair installation.
4. Corrosion Protection: Coat concealed surfaces of exterior aluminum in contact with grout, concrete, masonry, wood, or dissimilar metals, with a heavy coat of bituminous paint.

NOT FOR BIDDING PURPOSES

B. Mounting Methods:

1. Concealed Studs: Using a template, drill holes in substrate aligning with studs on back of plaque. Remove loose debris from hole and substrate surface.

   a. Masonry Substrates: Fill holes with adhesive. Leave recess space in hole for displaced adhesive. Place plaque in position and push until flush to surface, embedding studs in holes. Temporarily support plaque in position until adhesive fully sets.
   b. Thin or Hollow Surfaces: Place plaque in position and flush to surface, install washers and nuts on studs projecting through opposite side of surface, and tighten.

2. Through Fasteners: Drill holes in substrate using predrilled holes in plaque as template. Countersink holes in plaque if required. Place plaque in position and flush to surface. Install through fasteners and tighten.
3. Brackets: Remove loose debris from substrate surface and install bracket supports in position, so that plaque is correctly located and aligned.
4. Adhesive: Clean bond-breaking materials from substrate surface and remove loose debris. Apply linear beads or spots of adhesive symmetrically to back of plaque and of suitable quantity to support weight of plaque after cure without slippage. Keep adhesive away from edges to prevent adhesive extrusion as plaque is applied and to prevent visibility of cured adhesive at plaque edges. Place plaque in position, and push to engage adhesive. Temporarily support plaque in position until adhesive fully sets.
5. Shim-Plate Mounting: Provide 1/8-inch-thick, concealed aluminum shim plates with predrilled and countersunk holes, at locations indicated, and where other direct mounting methods are impractical. Attach plate with fasteners and anchors suitable for secure attachment to substrate. Attach plaques to plate using.

3.3 ADJUSTING AND CLEANING

A. Remove and replace damaged or deformed plaques and plaques that do not comply with specified requirements. Replace plaques with damaged or deteriorated finishes or components that cannot be successfully repaired by finish touchup or similar minor repair procedures.

B. Remove temporary protective coverings and strippable films as plaques are installed.

C. On completion of installation, clean exposed surfaces of plaques according to manufacturer's written instructions, and touch up minor nicks and abrasions in finish. Maintain plaques in a clean condition during construction and protect from damage until acceptance by Owner.

END OF SECTION 10 14 16

NOT FOR BIDDING PURPOSES

THIS PAGE INTENTIONALLY LEFT BLANK

NOT FOR BIDDING PURPOSES

SECTION 10 14 23

PANEL SIGNAGE

PART 1 - GENERAL

1.1 RELATED DOCUMENTS

A. Drawings and general provisions of the Contract, including General and Supplementary Conditions and Division 01 Specification Sections, apply to this Section.

1.2 SUMMARY

A. Section Includes:

1. Interior room signs identifying each permanent room or space.
2. Interior informational signs.

1.3 DEFINITIONS

A. Accessible: In accordance with the accessibility standard.

1.4 ACTION SUBMITTALS

A. Product Data: For each type of product.

B. Shop Drawings: Show fabrication and installation details for signs.

1. Include fabrication and installation details and attachments to other work.
2. Show sign mounting heights, locations of supplementary supports to be provided by other installers, and accessories.
3. Show message list, typestyles, graphic elements, including raised characters and Braille, and layout for each sign at least half size.

C. Sample Room Signs: Submit two full size samples of room signs illustrating type, style and color specified including method of attachment.

D. Samples for Other Signs: Submit two 12 x 12-inch size samples of each type face sheet illustrating style, texture, color, graphic image, message, cutouts and translucent lens attachment.

E. Samples Sign Frames and Trim: Submit two 12-inch-long samples of each type extruded frame and trim illustrating finish, texture, and color.

F. Sign Schedule: Use same designations indicated on Drawings.

1.5 INFORMATIONAL SUBMITTALS

NOT FOR BIDDING PURPOSES

A. Qualification Data: For Installer and manufacturer.

B. Sample Warranty: For special warranty.

1.6 CLOSEOUT SUBMITTALS

A. Maintenance Data: For signs to include in maintenance manuals.

1.7 QUALITY ASSURANCE

A. Installer Qualifications: An entity that employs installers and supervisors who are trained and approved by manufacturer.

1.8 FIELD CONDITIONS

A. Field Measurements: Verify locations of anchorage devices embedded in permanent construction by other installers by field measurements before fabrication and indicate measurements on Shop Drawings.

1.9 WARRANTY

A. Special Warranty: Manufacturer agrees to repair or replace components of signs that fail in materials or workmanship within specified warranty period.

1. Failures include, but are not limited to, the following:

a. Deterioration of finishes beyond normal weathering.
b. Deterioration of embedded graphic image colors.
c. Separation or delamination of sheet materials and components.

2. Warranty Period: Five years from date of Substantial Completion.

PART 2 - PRODUCTS

2.1 PERFORMANCE REQUIREMENTS

A. Accessibility Standard: Comply with applicable provisions in the USDOJ's "2010 ADA Standards for Accessible Design" and ICC A117.1.

2.2 INTERIOR ROOM SIGNS

A. Manufacturers: Subject to compliance with requirements, available manufacturers offering products that may be incorporated into the Work include, but are not limited to, the following:

1. Ace Sign Systems, Inc.
2. Advance Corporation; Braille-Tac Division.
3. ASI Sign Systems, Inc.
4. InPro Corporation; SignScape Signage and Wayfinding.
5. Mohawk Sign Systems.

NOT FOR BIDDING PURPOSES

B. Refer to Drawings for areas requiring signage.

C. Signs: Plastic, photo-etched to produce raised text and braille; 8 x 8 inch, 1/2-inch radius corners; 1-inch high slip-in.

D. Lettering: Color and position as selected; Helvetica style, characters raised 1/32 inch.

1. Room numbers and room names 5/8-inch-high upper-case text, 1-inch high numerals.
2. Room occupant names 1/2-inch-high upper and lower case.

E. Backplate Color: Custom color to match paint sample provided by Architect. Use backing plate of matching color where mounted on glass.

F. Braille: Provide Grade 2 Braille translation of printed text.

G. Pictograms: Provide pictograms for toilet rooms and stair entry doors.

H. Provide room numbers and room names at each entrance to each room as shown on the Drawings if not indicated on Drawings as directed by Architect.

I. Mechanical Fasteners: As recommended by manufacturer. Adhesive may be used where signs are attached to glass.

2.3 INTERIOR INFORMATIONAL SIGNS

A. Manufacturers: Subject to compliance with requirements, available manufacturers offering products that may be incorporated into the Work include, but are not limited to, the following:

1. Ace Sign Systems, Inc.
2. Advance Corporation; Braille-Tac Division.
3. ASI Sign Systems, Inc.
4. InPro Corporation; SignScape Signage and Wayfinding.
5. Mohawk Sign Systems.

B. Refer to Drawings for areas requiring signage.

C. Signs: Plastic subsurface printed on 1/16-inch-thick clear matte acrylic and laminated to 1/8inch-thick acrylic backplate; size required for message, 1/2-inch radius corners.

D. Lettering: Helvetica style, minimum 5/8-inch-high upper-case text. Color and position as selected.

E. Backplate Color: Custom color to match paint sample provided by Architect. Use backing plate of matching color where mounted on glass.

F. Mechanical Fasteners: As recommended by manufacturer. Adhesive may be used where signs are attached to glass.

PART 3 - EXECUTION

NOT FOR BIDDING PURPOSES

3.1 EXAMINATION

A. Examine substrates, areas, and conditions, with Installer present, for compliance with requirements for installation tolerances and other conditions affecting performance of work.

B. Verify that items, including anchor inserts are sized and located to accommodate signs.

C. Proceed with installation only after unsatisfactory conditions have been corrected.

3.2 INSTALLATION

A. Locate signs and accessories where indicated, using mounting methods of types described and complying with manufacturer's written instructions.

1. Install signs level, plumb, and at heights indicated, with sign surfaces free of distortion and other defects in appearance.
2. Interior Wall Signs: Install signs on walls adjacent to latch side of door where applicable. Where not indicated or possible, such as double doors, install signs on nearest adjacent walls. Locate to allow approach within 3 inches of sign without encountering protruding objects or standing within swing of door.
3. Install signs after interior surfaces are finished.
4. Locate signs as indicated on Drawings and in accordance with accessibility requirements.

B. Clean and polish signs when installation is completed.

3.3 INSTALLATION -ROOM AND INFORMATIONAL SIGNS

A. Mount room signs with mechanical fasteners as recommended by manufacturer, unless otherwise directed by Architect.

B. Locate room identification signs on wall surfaces adjacent to strike side of door, level, 5 feet above finished floor to center line of sign and 3 inches from door jamb trim.

C. Locate informational signs on wall surfaces, level, 5 feet above finished floor to center line of sign at location scheduled.

D. Wall-Mounted Signs: Comply with sign manufacturer's written instructions except where more stringent requirements apply.

3.4 SCHEDULE – INTERIOR SIGNAGE

A. Sign Type A:

1. Description: Acrylic sign and backplate with tactile graphics and Braille.
2. Size: 9" high x 6" wide or 6" high x 9" wide.
3. Quantity: 55.
4. Locations: Room (name and number), restrooms, stair, specialty rooms.

B. Sign Type B:

1. Description: Acrylic sign and backplate with tactile graphics and Braille, with 3" high x 9" wide window for printed paper insert.
2. Size: 6" high x 9" wide.

NOT FOR BIDDING PURPOSES

3. Quantity: 60.
4. Locations: Classrooms, Office and Staff signs.

C. Sign Type C:

1. Description: Acrylic sign and backplate with tactile graphics and Braille.
2. Size: 6" high x 6" wide.
3. Quantity: 32.
4. Locations: Secondary rooms (storage, mechanical, janitor, etc.)

D. Sign Type D:

1. Description: Acrylic sign and backplate with tactile graphics and Braille.
2. Size: 8" high x 24" wide.
3. Quantity: 6.
4. Locations: Corridors (directional signage).

E. Sign Type E: Area of Rescue Signs.

1. Description: Acrylic sign and backplate with tactile graphics and Braille.
2. Size: 9" high x 9" wide.
3. Quantity: 4.
4. Locations: Provide one area-of-rescue Sign mounted on corridor wall adjacent to each entrance to stairwell containing area of rescue.

F. Sign Type F: Occupancy Capacity Signs.

1. Description: Acrylic sign and backplate with tactile graphics and Braille.
2. Size: 3" high x 9" wide.
3. Quantity: 3:
4. Locations: Provide one occupancy capacity sign at mounted at the main entrance to each assembly space below the room name and number. Verify location with the Architect.

G. Sign Type G: Tactile Exit Signs.

1. Description: Acrylic sign and backplate with tactile graphics and braille, one standard background and contrasting copy color stating “EXIT”:
2. Size: 9" high x 9" wide.
3. Quantity: 32.
4. Locations: Provide one area of tactile exit sign mounted on the wall adjacent to each door to an egress, stairwell, exit passage, and exit discharge. In general, all exterior doors and all doors with illuminated signs shall have Type G Tactile Exit Signs adjacent to the doors as required by the International Building Code.

3.5 CLEANING AND PROTECTION

A. After installation, clean soiled sign surfaces according to manufacturer's written instructions. Protect signs from damage until acceptance by Owner.

END OF SECTION 10 14 23

NOT FOR BIDDING PURPOSES

THIS PAGE INTENTIONALLY LEFT BLANK

NOT FOR BIDDING PURPOSES

NOT FOR BIDDING PURPOSES

SECTION 10 21 23 - CUBICLE CURTAINS AND TRACK

PART 1 - GENERAL

1.1 RELATED DOCUMENTS

A. Drawings and general provisions of Contract, including General and Supplementary Conditions and Division 1 Specification Sections, apply to this Section.

1.2 SUMMARY

A. This Section includes ceiling-mounted or suspended tracks and cubicle curtain material.

1.3 SUBMITTALS

A. General: Submit the following in accordance with Conditions of Contract and Division 1 Specification Sections.

B. Product data on physical characteristics, durability, resistance to fading, and flame resistance characteristics for each type of product specified.

C. Shop drawings showing location, layout, track types, anchorage details, and conditions requiring accessories.

D. Samples for initial selection purposes in form of manufacturer's color charts consisting of actual units or sections of units showing full range of colors, textures, and patterns available for each type of curtain material.

E. Samples for verification purposes in manufacturer's standard size, showing full range of colors, textures, and pattern variations expected. Prepare samples from same material to be used for the Work. Submit the following:

1. 18-inch square of each type of curtain material.
2. 4-inch square of each type of mesh material.

F. Material certificate signed by the manufacturer stating that material complies with "Use of Materials Bulletin UM-44C" published by U.S. Department of Housing and Urban Development (HUD), is currently listed in HUD "Certified Products Directory", and so identified.

G. Maintenance data for inclusion in "Operating and Maintenance Manual" specified in Division 1.

PART 2 - PRODUCTS

2.1 MANUFACTURERS

A. Manufacturers: Subject to compliance with requirements, provide products by one of the following:

1. ADC Hospital Equipment
2. General Cubicle Company
3. R. Nelson Company, Inc.
4. Pryor Products
5. Salisbury Industries
6. Watrous, Inc.

2.2 TRACK

A. Track: Anodized, extruded aluminum "C" section track.

B. Curves: Factory-fabricated, 12-inch radius, 90-degree and 45-degree bends.

C. Splicing Clamp: Anodized aluminum sleeve matching track color.

D. Track Accessories: Provide end caps, connectors, end stops, coupling sleeves, wall brackets, and other accessories as required for secure and operational installation. Provide a quantity of carriers for 6-inch spacing the entire length of curtain.

1. Carriers: One-piece nylon glide with chrome-plated steel hook.

2.3 CURTAINS

A. Curtain Fabric: Inherently and permanently flame resistant for the life of the fabric. Launderable to a temperature of not less than 95 deg. F.
B. Basis of Design Product: Subject to compliance, provide the following or approved equal:
1. Maharam
2. Style: Tune 511464
3. Color: To be determined
4. Width: 72”.
5. Repeat: 30 ¾” v, 37 ¼ “ h
6. Content: 60% of the solution dyed Polyester, 21% post-consumer recycled FR polyester, 19% FR polyester

C. Fire Performance Characteristic: Provide curtain fabric identical to that tested for the following fire performance requirement, according to test method indicated, by UL or other testing and inspecting agency acceptable to authorities having jurisdiction.

1. Rating: Flame resistant.
2. Test Method: NFPA 701.
3. Fabric: To be selected by Architect form Manufacturer’s full range of color and patterns.

D. Curtain Top: Not less than 20-inch-wide nylon mesh with overlapped seams, double-lock stitched to body of curtain. Sides and top of mesh shall be bound by same fabric as body of curtain.

1. Mesh: minimum 70% openness, 1/2” diagonal with 1.25” grommet band at top edge.
2. Color: As selected from manufacturers available colors.

E. Fabrication: Provide curtains not less than 10 percent wider than length of track from which they

NOT FOR BIDDING PURPOSES

hang, extending to 15 inches above the floor.

1. Top Hem: Not less than 1½ inches wide, triple thickness, reinforced with integral web, and double stitched.

    a. Grommets: #2 Rolled-edge, rustproof nickel plated brass, and spaced not more than 6 inches on center.

2. Bottom and Side Hems: Not less than 1 inch wide, reinforced, double thickness, and single stitched.
3. Seams: Not less than 1/2 inch wide, double turned and double stitched.

F. Curtain Tie Back: Wall-mounted, nickel-plated brass chain.

PART 3 - EXECUTION

3.1 INSTALLATION

A. Install units with clips and anchorages suited to mounting and substrate indicated.

B. Provide fire treated wood blocking above acoustical ceiling tile for anchorage

C. Secure ceiling-mounted tracks at intervals of not less than 3 feet.

3.2 ADJUSTING

A. Adjust for unencumbered operation of hardware.

END OF SECTION 10 21 23

NOT FOR BIDDING PURPOSES

SECTION 10 22 39

FOLDING PANEL PARTITIONS

NOT FOR BIDDING PURPOSES

PART 1 - GENERAL

1.1 RELATED DOCUMENTS

A. Drawings and general provisions of the Contract, including General and Supplementary Conditions and Division 01 Specification Sections, apply to this Section.

1.2 SUMMARY

A. Section Includes:

1. Manually operated, acoustical panel partitions.
2. Electrically operated, acoustical panel partitions.

1.3 DEFINITIONS

A. STC: Sound Transmission Class.

1.4 PREINSTALLATION MEETINGS

A. Preinstallation Conference: Conduct conference at Project site.

1.5 ACTION SUBMITTALS

A. Product Data: For each type of product.

B. Shop Drawings: For operable panel partitions.

1. Include plans, elevations, sections, attachment details, and numbered panel installation sequence.
2. Indicate stacking and operating clearances. Indicate location and installation requirements for hardware and track, blocking, and direction of travel.
3. Include diagrams for power, signal, and control wiring.

C. Samples for Initial Selection: For each type of exposed material, finish, covering, or facing.

1. Include Samples of accessories involving color selection.

D. Samples for Verification: For each type of exposed material, finish, covering, or facing, prepared on Samples of size indicated below:

E. Delegated-Design Submittal: For operable panel partitions.

1. Include design calculations for seismic restraints that brace tracks to structure above.

1.6 INFORMATIONAL SUBMITTALS

A. Coordination Drawings: Reflected ceiling plans, drawn to scale, on which the following items are shown and coordinated with each other, using input from installers of the items involved:

1. Partition track, track supports and bracing, switches, turning space, and storage layout.
2. Suspended ceiling components.
3. Structural members to which suspension systems will be attached.
4. Size and location of initial access modules for acoustical tile.
5. Items penetrating finished ceiling including the following:

   a. Lighting fixtures.
   b. HVAC ductwork, outlets, and inlets.
   c. Speakers.
   d. Sprinklers.
   e. Smoke detectors.
   f. Access panels.

B. Setting Drawings: For embedded items and cutouts required in other work, including support-beam.

C. Qualification Data: For Installer.

D. Product Certificates: For each type of operable panel partition.

1. Include approval letter signed by manufacturer acknowledging Owner-furnished panel facing material complies with requirements.

E. Product Test Reports: For each operable panel partition, for tests performed by a qualified testing agency.

F. Field quality-control reports.

G. Sample Warranty: For manufacturer's special warranty.

1.7 CLOSEOUT SUBMITTALS

A. Operation and Maintenance Data: For operable panel partitions to include in maintenance manuals.

1. In addition to items specified in Section 017823 "Operation and Maintenance Data," include the following:

   a. Panel finish facings and finishes for exposed trim and accessories. Include precautions for cleaning materials and methods that could be detrimental to finishes and performance.
   b. Seals, hardware, track, track switches, carriers, and other operating components.
   c. Electric operator and controls.

1.8 MAINTENANCE MATERIAL SUBMITTALS

A. Furnish extra materials, from the same production run, that match products installed and that are packaged with protective covering for storage and identified with labels describing contents.

1. Panel Finish-Facing Material: Furnish full width in quantity to cover both sides of two panels when installed.

NOT FOR BIDDING PURPOSES

1.9 QUALITY ASSURANCE

A. Installer Qualifications: An entity that employs installers and supervisors who are trained and approved by manufacturer.

1.10 DELIVERY, STORAGE, AND HANDLING

A. Protectively package and sequence panels in order for installation. Clearly mark packages and panels with numbering system used on Shop Drawings. Do not use permanent markings on panels.

1.11 WARRANTY

A. Special Warranty: Manufacturer agrees to repair or replace components of operable panel partitions that fail in materials or workmanship within specified warranty period.

1. Failures include, but are not limited to, the following:

a. Faulty operation of operable panel partitions.
b. Deterioration of metals, metal finishes, and other materials beyond normal use.

2. Warranty Period: Two years from date of Substantial Completion. 10 years for trolleys and tracks.

PART 2 - PRODUCTS

2.1 PERFORMANCE REQUIREMENTS

A. Acoustical Performance: Provide operable panel partitions tested by a qualified testing agency for the following acoustical properties according to test methods indicated:

1. Sound-Transmission Requirements: Operable panel partition assembly tested for laboratory sound-transmission loss performance according to ASTM E 90, determined by ASTM E 413, and rated for not less than the STC indicated.

B. Fire-Test-Response Characteristics: Provide panels with finishes complying with one of the following as determined by testing identical products by a testing and inspecting agency acceptable to authorities having jurisdiction:

1. Surface-Burning Characteristics: Comply with ASTM E 84; testing by a qualified testing agency. Identify products with appropriate markings of applicable testing agency.

a. Flame-Spread Index: 25 or less.
b. Smoke-Developed Index: 450 or less.

2. Fire Growth Contribution: Complying with acceptance criteria of local code and authorities having jurisdiction when tested according to NFPA 286.

C. Fire Resistance: Provide fire-rated operable panel partition assemblies including pass doors complying with NFPA 80, based on testing according to UL 10B for fire-rated door assemblies.

NOT FOR BIDDING PURPOSES

1. Pass doors in fire-rated operable panel partition assemblies shall meet positive-pressure requirements.

D. Electrical Components, Devices, and Accessories: Listed and labeled as defined in NFPA 70, by a qualified testing agency, and marked for intended location and application.

2.2 OPERABLE ACOUSTICAL PANELS -ELECTRICAL

A. Operable Acoustical Panels: Partition system, including panels, seals, finish facing, suspension system, operators, and accessories.

1. Basis-of-Design Product: Subject to compliance with requirements, provide Modernfold, Inc.; Acousti-Seal Model AS933E, or comparable product by one of the following:

a. Advanced Equipment Corporation.
b. Hufcor, Inc.
c. Panelfold Inc.

B. Panel Operation: Electrically operated, continuously hinged panels.

C. Panel Construction: As required to support panel from suspension components and with reinforcement for hardware attachment. Fabricate panels with tight hairline joints and concealed fasteners. Fabricate panels so finished in-place partition is rigid; level; plumb; aligned, with tight joints and uniform appearance; and free of bow, warp, twist, deformation, and surface and finish irregularities.

D. Dimensions: Fabricate operable acoustical panel partitions to form an assembled system of dimensions indicated and verified by field measurements.

1. Panel Width: Standard widths.

E. STC: Not less than 52.

F. Panel Weight: 10 lb/sq. ft. maximum.

G. Panel Thickness: Model 933EG; Nominal dimension of 3-1/4 inches.

H. Panel Materials:

1. Steel Frame: Steel sheet, manufacturer's standard nominal minimum thickness for uncoated steel.
2. Steel Face/Liner Sheets: Tension-leveled steel sheet, 21-gauge minimum nominal thickness for uncoated steel.
3. Aluminum: Alloy and temper recommended by aluminum producer and finisher for type of use, corrosion resistance, and finish indicated; ASTM B 221 for extrusions; manufacturer's standard strengths and thicknesses for type of use.

a. Frame Reinforcement: Manufacturer's standard steel or aluminum.

4. Gypsum Board: ASTM C 1396/C 1396M.

I. Panel Closure: Manufacturer's standard unless otherwise indicated.

J. Panel Finish: Plastic laminate and vinyl as indicated on Drawings and Section 090600.

NOT FOR BIDDING PURPOSES

K. Vertical Seals: Deep-nesting, interlocking astragals mounted on each edge of panel, with continuous, resilient acoustical seal.

L. Horizontal Top Seals: Continuous-contact, resilient seal exerting uniform constant pressure on track.

M. Horizontal Bottom Seals: Resilient, mechanical, retractable, constant-force-contact seal exerting uniform constant pressure on floor when extended, ensuring horizontal and vertical sealing and resisting panel movement.

1. Mechanically Operated for Acoustical Panels: Extension and retraction of bottom seal by operating handle or built-in operating mechanism, with operating range not less than 11/2 inches between retracted seal and floor finish.

N. Hardware: Manufacturer's standard as required to operate operable panel partition and accessories; with decorative, protective finish.

1. Hinges: Full leaf butt hinges, attached directly to panel frame with welded hinge anchor plates within panel to further support hinge mounting to frame. Lifetime warranty on hinges.
2. Finish: Plastic laminate and vinyl as indicated on Drawings and Section 090600.

2.3 OPERABLE ACOUSTICAL PANELS -MANUAL

A. Operable Acoustical Panels: Partition system, including panels, seals, finish facing, suspension system, operators, and accessories.

1. Basis-of-Design Product: Subject to compliance with requirements, provide Modernfold, Inc.; Acousti-Seal Model 932, or comparable product by one of the following:

a. Advanced Equipment Corporation.
b. Hufcor, Inc.
c. Panelfold Inc.

B. Panel Operation: Manually operated, paired panels.

C. Panel Construction: As required to support panel from suspension components and with reinforcement for hardware attachment. Fabricate panels with tight hairline joints and concealed fasteners. Fabricate panels so finished in-place partition is rigid; level; plumb; aligned, with tight joints and uniform appearance; and free of bow, warp, twist, deformation, and surface and finish irregularities.

D. Dimensions: Fabricate operable acoustical panel partitions to form an assembled system of dimensions indicated and verified by field measurements.

1. Panel Width: Standard widths.

E. STC: Not less than 52.

F. Panel Weight: 11 lb/sq. ft. maximum.

G. Panel Thickness: Model 932; Nominal dimension of 3-1/4 inches.

H. Panel Materials:

1. Steel Frame: Steel sheet, manufacturer's standard nominal minimum thickness for uncoated steel.

NOT FOR BIDDING PURPOSES

2. Panel faces shall be of Class “A” rated tackable gypsum material assembled to appropriate acoustical backing to meet STC requirement and assembled to welded steel frame.
3. Aluminum: Alloy and temper recommended by aluminum producer and finisher for type of use, corrosion resistance, and finish indicated; ASTM B 221 for extrusions; manufacturer's standard strengths and thicknesses for type of use.
   a. Frame Reinforcement: Manufacturer's standard steel or aluminum.

4. Gypsum Board: ASTM C 1396/C 1396M.

I. Panel Closure: Manufacturer's standard unless otherwise indicated.

J. Panel faces shall be covered with factory-applied marker board, full height on each side, white color.

K. Trim color: As selected by the Architect from manufacturer’s standard range.

L. Hardware: Manufacturer's standard as required to operate operable panel partition and accessories; with decorative, protective finish.

M. Sound Seals:

1. Vertical interlocking sound seals between panels (astragals) of reversible tongueandgroove configuration shall be required in each panel edge, permitting universal panel operation. Astragals shall be steel for maximum durability and fire resistance. Rigid plastic astragals or astragals in only one panel edge are not acceptable.
2. Horizontal top seals shall be continuous contact extruded vinyl bulb shape, with pairs of non-contacting vinyl fingers to prevent distortion and no mechanically-operated parts.
3. Horizontal bottom floor seals shall be automatic operable seals providing nominal 1-inch operating clearance with operating range of +/-0.50-inch and shall automatically drop as panels are positioned (standard).

N. Hinges: Full leaf butt hinges, attached directly to panel frame with welded hinge anchor plates within panel to further support hinge mounting to frame. Lifetime warranty on hinges. Hinges mounted into panel edge or vertical astragal are not acceptable.

1. Each pair of panels to have minimum of three hinges

2.4 PANEL FINISH FACINGS

A. Refer to Section 090600.

2.5 SUSPENSION SYSTEMS – Electrically Operated Panels

A. Tracks: Modernfold #14 Suspension; 7-gauge (minimum) steel track shall be connected to structural support by minimum 1/2-inch diameter threaded steel hanger rods. Thickness and profile designed to support loads with maximum deflection of 1/360 of span.

B. Carriers: Each panel shall be supported by one 8-wheel ball bearing carrier. Wheels to be of hardened steel ball bearings encased with steel tires.

C. Steel Finish: Manufacturer's standard, factory-applied, corrosion-resistant, protective coating unless otherwise indicated.

NOT FOR BIDDING PURPOSES

2.6 SUSPENSION SYSTEMS – Manually Operated Panels

A. Tracks: Equal to Modernfold #17 suspension system 11 gauge (minimum) formed steel (or Hufcor Type 38, heavy-duty extruded aluminum). Track shall be connected to structural support by minimum 3/8-inch diameter threaded steel hanger rods. Thickness and profile designed to support loads with maximum deflection of 1/360 of span.

B. Track Soffit: Steel or aluminum soffit paint color selected by the Architect.

C. Carriers: Each panel shall be supported by one 4-wheel ball bearing carrier. Wheels to be of hardened steel ball bearings encased with steel or molded polymer tire.

D. Aluminum Finish: Mill finish or manufacturer's standard, factory-applied, decorative finish unless otherwise indicated.

E. Steel Finish: Manufacturer's standard, factory-applied, corrosion-resistant, protective coating unless otherwise indicated.

2.7 ELECTRIC OPERATORS

A. Factory-assembled electric operation system of size and capacity recommended and provided by operable panel partition manufacturer for partition specified; with electric motor and factoryprewired motor controls, speed reducer, chain drive, control stations, control devices, and accessories required for operation. Include wiring from control stations to motor. Coordinate operator wiring requirements and electrical characteristics with building electrical system.

B. Comply with NFPA 70.

C. Control Equipment: Comply with NEMA ICS 1, NEMA ICS 2, and NEMA ICS 6.

D. Motor Electrical Characteristics:

1. Horsepower: 1 hp.
2. Volts: 208.
3. Phase: Polyphase.
4. Hertz: 60.

E. Control Stations: Two single-key-operated, constant-pressure control stations located remotely from each other on opposite sides and opposite ends of partition run. Wire in series to require simultaneous activation of both key stations to operate partition. Each three-position control station labeled "Open," "Close," and " Stop." Furnish two keys per station.

2.8 INFARED SAFETY SYSTEM – Electrically Operated Doors

A. Provide and install dual key switch assembly as needed on each partition. Operable partitions shall operate by two (2) key control stations, wired in series and located on opposite sides of partition.

B. Provide and install sensor control panel that can accept various line voltage, therefore making it compatible with all partition systems. Control panel must be a “self-contained” system that will render electric partition inoperable if any of component parts malfunction. Control panel shall also reduce line voltage out onto infrared sensors and arming station down to 24 volts.

NOT FOR BIDDING PURPOSES

C. Infrared safety system must be designed to work as integral part of operable partition system. While partition is in operation, minimum of two infrared sensors monitor each side of partition for movement, and immediately disengages motor upon “safety zone” being interrupted. These infrared beams must span entire path of area to further detect motion in this area. Additional sensors will be installed as site conditions warrant. Sensors shall be installed 9-12 feet from floor and be covered by protective housing. Point-to-point units must also be equipped with alarm that will sound in event that system is activated.

D. Provide and install required signage for safe operating procedures

2.9 ACCESSORIES

A. Storage Pocket Door: Full height at end of partition runs to conceal stacked partition; of same materials, finish, construction, thickness, and acoustical qualities as panels; complete with operating hardware and acoustical seals at soffit, floor, and jambs. Hinges in finish to match other exposed hardware.

1. Manufacturer's standard method to secure storage pocket door in closed position.

PART 3 - EXECUTION

3.1 EXAMINATION

A. Examine flooring, floor levelness, structural support, and opening, with Installer present, for compliance with requirements for installation tolerances and other conditions affecting performance of operable panel partitions.

B. Proceed with installation only after unsatisfactory conditions have been corrected.

3.2 INSTALLATION

A. Install operable panel partitions and accessories after other finishing operations, including painting, have been completed in area of partition installation.

B. Install panels in numbered sequence indicated on Shop Drawings.

C. Broken, cracked, chipped, deformed, or unmatched panels are not acceptable.

D. Broken, cracked, deformed, or unmatched gasketing or gasketing with gaps at butted ends is not acceptable.

E. Light-Leakage Test: Illuminate one side of partition installation and observe vertical joints and top and bottom seals for voids. Adjust partitions for alignment and full closure of vertical joints and full closure along top and bottom seals.

3.3 ADJUSTING

A. Adjust operable panel partitions, hardware, and other moving parts to function smoothly, and lubricate as recommended by manufacturer.

B. Adjust pass doors and storage pocket doors to operate smoothly and easily, without binding or warping.

C. Verify that safety devices are properly functioning.

3.4 MAINTENANCE SERVICE

NOT FOR BIDDING PURPOSES

A. Maintenance Service: Beginning at Substantial Completion, maintenance service shall include 12 months' full maintenance by manufacturer's authorized service representative. Include quarterly preventive maintenance, repair or replacement of worn or defective components, lubrication, cleaning, and adjusting as required for proper operable-partition operation. Parts and supplies shall be manufacturer's authorized replacement parts and supplies.

3.5 DEMONSTRATION

A. Engage a factory-authorized service representative to train Owner's maintenance personnel to adjust, operate, and maintain operable panel partitions.

END OF SECTION 10 22 39

NOT FOR BIDDING PURPOSES

THIS PAGE INTENTIONALLY LEFT BLANK

NOT FOR BIDDING PURPOSES

SECTION 10 26 00

WALL AND CORNER PROTECTION

NOT FOR BIDDING PURPOSES

PART 1 - GENERAL

1.1 RELATED DOCUMENTS

A. Drawings and general provisions of the Contract, including General and Supplementary Conditions and Division 01 Specification Sections, apply to this Section.

1.2 SUMMARY

A. Section Includes:

1. Corner guards.

1.3 ACTION SUBMITTALS

A. Product Data: For each type of product.

1. Include construction details, material descriptions, impact strength, dimensions of individual components and profiles, and finishes.

B. Shop Drawings: For each type of wall and door protection showing locations and extent.

C. Samples for Initial Selection: For each type of impact-resistant wall-protection unit indicated, in each color and texture specified.

1. Include Samples of accent strips and accessories to verify color selection.

D. Samples for Verification: For each type of exposed finish on the following products, prepared on Samples of size indicated below:

1. Corner Guards: 12 inches long. Include example top caps.

1.4 INFORMATIONAL SUBMITTALS

A. Material Certificates: For each type of exposed plastic material.

B. Sample Warranty: For special warranty.

1.5 CLOSEOUT SUBMITTALS

A. Maintenance Data: For each type of wall and door protection product to include in maintenance manuals.

1. Include recommended methods and frequency of maintenance for maintaining best condition of plastic covers under anticipated traffic and use conditions. Include precautions against using cleaning materials and methods that may be detrimental to finishes and performance.

1.6 MAINTENANCE MATERIAL SUBMITTALS

A. Furnish extra materials that match products installed and that are packaged with protective covering for storage and identified with labels describing contents.

1. Corner-Guard Covers: Full-size plastic covers of maximum length equal to 2 percent of each type, color, and texture of cover installed, but no fewer than two, 48-inch-long units.
2. Mounting and Accessory Components: Amounts proportional to the quantities of extra materials. Package mounting and accessory components with each extra material.

1.7 DELIVERY, STORAGE, AND HANDLING

A. Store wall and door protection in original undamaged packages and containers inside well-ventilated area protected from weather, moisture, soiling, extreme temperatures, and humidity.

1. Maintain room temperature within storage area at not less than 70 deg F during the period plastic materials are stored.
2. Keep plastic materials out of direct sunlight.
3. Store plastic wall-and door-protection components for a minimum of 72 hours, or until plastic material attains a minimum room temperature of 70 deg F.

a. Store corner-guard covers in a vertical position.

1.8 WARRANTY

A. Special Warranty: Manufacturer agrees to repair or replace components of wall-and door-protection units that fail in materials or workmanship within specified warranty period.

1. Failures include, but are not limited to, the following:

a. Structural failures including detachment of components from each other or from the substrates, and permanent deformation beyond normal use.

2. Warranty Period: One year from date of Substantial Completion.

PART 2 - PRODUCTS

2.1 MANUFACTURERS

A. Source Limitations: Obtain wall-and door-protection products of each type from single source from single manufacturer.

2.2 PERFORMANCE REQUIREMENTS

A. Surface Burning Characteristics: Comply with ASTM E 84 or UL 723; testing by a qualified testing agency. Identify products with appropriate markings of applicable testing agency.

NOT FOR BIDDING PURPOSES

1. Flame-Spread Index: 25 or less.
2. Smoke-Developed Index: 450 or less.

B. Regulatory Requirements: Comply with applicable provisions in the U.S. Architectural & Transportation Barriers Compliance Board's ADA-ABA Accessibility Guidelines for Buildings and Facilities and ICC A117.1.

2.3 CORNER GUARDS

A. Surface-Mounted, Plastic-Cover Corner Guards: Manufacturer's standard assembly consisting of snap-on, resilient plastic cover installed over retainer; including mounting hardware; fabricated with 90-or 135-degree turn to match wall condition.

1. Basis of Design Product Subject to compliance with requirements, provide Construction Specialties, Inc.; SSM-20AN, or comparable product by one of the following:

   a. InPro Corporation (IPC).
   b. Koroseal Interior Products.
   c. Pawling Corporation.
   d. Tepromark Architectural products, LLC.

2. Cover: Extruded rigid plastic, minimum 0.078-inch wall thickness; as follows:

   a. Profile: Nominal 2-inch-long leg and 1/4-inch corner radius indicated.
   b. Height: 4 feet, unless indicated otherwise.
   c. Color and Texture: Refer to Section 090600.

3. Continuous Retainer: Minimum 0.060-inch-thick, one-piece, extruded aluminum.
4. Retainer Clips: Manufacturer's standard impact-absorbing clips.
5. Top and Bottom Caps: Prefabricated, injection-molded plastic; color matching cover; field adjustable for close alignment with snap-on cover.

2.4 MATERIALS

A. Plastic Materials: Chemical-and stain-resistant, high-impact-resistant plastic with integral color throughout; extruded and sheet material as required, thickness as indicated.

2.5 FABRICATION

A. Fabricate wall and door protection according to requirements indicated for design, performance, dimensions, and member sizes, including thicknesses of components.

B. Factory Assembly: Assemble components in factory to greatest extent possible to minimize field assembly. Disassemble only as necessary for shipping and handling.

C. Quality: Fabricate components with uniformly tight seams and joints and with exposed edges rolled. Provide surfaces free of wrinkles, chips, dents, uneven coloration, and other imperfections. Fabricate members and fittings to produce flush, smooth, and rigid hairline joints.

2.6 FINISHES

A. Protect finishes on exposed surfaces from damage by applying a strippable, temporary protective covering before shipping.

NOT FOR BIDDING PURPOSES

B. Appearance of Finished Work: Noticeable variations in same piece are not acceptable. Variations in appearance of adjoining components are acceptable if they are within the range of approved Samples and are assembled or installed to minimize contrast.

PART 3 - EXECUTION

3.1 EXAMINATION

A. Examine substrates and wall areas, with Installer present, for compliance with requirements for installation tolerances**,** fire rating, and other conditions affecting performance of the Work.

B. Examine walls to which wall and door protection will be attached for blocking, grounds, and other solid backing that have been installed in the locations required for secure attachment of support fasteners.

1. For wall protection attached with adhesive, verify compatibility with and suitability of substrates, including compatibility with existing finishes or primers.

C. Proceed with installation only after unsatisfactory conditions have been corrected.

3.2 PREPARATION -GENERAL

A. Complete finishing operations, including painting, before installing wall and door protection.

B. Before installation, clean substrate to remove dust, debris, and loose particles.

3.3 INSTALLATION -GENERAL

A. Installation Quality: Install wall and door protection according to manufacturer's written instructions, level, plumb, and true to line without distortions. Do not use materials with chips, cracks, voids, stains, or other defects that might be visible in the finished Work.

B. Mounting Heights: Install wall and door protection in locations and at mounting heights indicated on Drawings.

C. Accessories: Provide splices, mounting hardware, anchors, trim, joint moldings, and other accessories required for a complete installation.

1. Provide anchoring devices and suitable locations to withstand imposed loads.

3.4 CLEANING

A. Immediately after completion of installation, clean plastic covers and accessories using a standard ammonia-based household cleaning agent.

END OF SECTION 10 26 00

NOT FOR BIDDING PURPOSES

SECTION 10 28 00

TOILET, BATH, AND LAUNDRY ACCESSORIES

NOT FOR BIDDING PURPOSES

PART 1 - GENERAL

1.1 RELATED DOCUMENTS

A. Drawings and general provisions of the Contract, including General and Supplementary Conditions and Division 01 Specification Sections, apply to this Section.

1.2 SUMMARY

A. Section Includes:

1. Public-use washroom accessories.
2. Underlavatory guards.
3. Custodial accessories.
4. Electric hand dryer.

1.3 COORDINATION

A. Coordinate accessory locations with other work to prevent interference with clearances required for access by people with disabilities, and for proper installation, adjustment, operation, cleaning, and servicing of accessories.

B. Deliver inserts and anchoring devices set into concrete or masonry as required to prevent delaying the Work.

1.4 ACTION SUBMITTALS

A. Product Data: For each type of product.

1. Include construction details, material descriptions, dimensions of individual components and profiles, and finishes.
2. Include anchoring and mounting requirements, including requirements for cutouts in other work and substrate preparation.

B. Samples: Full size, for each exposed product and for each finish specified.

1. Approved full-size Samples will be returned and may be used in the Work.

C. Product Schedule: Indicating types, quantities, sizes, and installation locations by room of each accessory required.

1. Identify locations using room designations indicated.
2. Identify accessories using designations indicated.

1.5 INFORMATIONAL SUBMITTALS

A. Sample Warranty: For manufacturer's special warranty.

1.6 CLOSEOUT SUBMITTALS

A. Maintenance Data: For accessories to include in maintenance manuals.

1.7 WARRANTY

A. Manufacturer's Special Warranty for Mirrors: Manufacturer agrees to repair or replace mirrors that fail in materials or workmanship within specified warranty period.

1. Failures include, but are not limited to, visible silver spoilage defects.
2. Warranty Period: 15 years from date of Substantial Completion.

PART 2 - PRODUCTS

2.1 OWNER-FURNISHED MATERIALS

A. Owner-Furnished and Installed Materials:

1. Paper towel dispenser.
2. Toilet tissue dispenser.
3. Soap dispenser.

2.2 PUBLIC-USE WASHROOM ACCESSORIES

A. Basis of Design Product: Subject to compliance with requirements, provide products by Bobrick Washroom Equipment, Inc., or comparable product by one of the following:

1. AJW Architectural Products.
2. American Specialties, Inc.
3. Bradley Corporation.

B. Grab Bars: 18 ga, type 304 S.S., 1-1/2-inch O.D. Bars with Satin finish, model# B-6806 Series.

C. Mirror: B 1658, tempered glass, channel-frame.

D. Refer to Toilet Room Equipment Schedule on Drawings for mounting heights.

2.3 UNDERLAVATORY GUARDS

A. Manufacturers: Subject to compliance with requirements, available manufacturers offering products that may be incorporated into the Work include, but are not limited to, the following:

1. Plumberex Specialty Products, Inc.
2. Truebro by IPS Corporation.

NOT FOR BIDDING PURPOSES

B. Under lavatory Guard:

1. Description: Insulating pipe covering for supply and drain piping assemblies that prevent direct contact with and burns from piping; allow service access without removing coverings.
2. Material and Finish: Antimicrobial, molded plastic, white.

2.4 CUSTODIAL ACCESSORIES

A. Mop and Broom Holder:

1. Basis of Design Product: Subject to compliance with requirements, provide products by Bobrick Washroom Equipment, Inc., or comparable product by one of the following:

   a. AJW Architectural Products.
   b. American Specialties, Inc.
   c. Bradley Corporation.

2. Description: Unit with shelf, hooks, holders, and rod suspended beneath shelf. #B-224 by 36 inches.

3. Material and Finish: Stainless steel, No. 4 finish (satin).

2.5 WARM-AIR DRYERS

A. Source Limitations: Obtain warm-air dryers from single source from single manufacturer.

B. Warm-Air Dryer:

1. Basis-of-Design Product: Subject to compliance with requirements, provide Excel Dryer Inc.; Xlerator Hand Dryer, Model XL-SB, or a comparable product by one of the following:

   a. American Specialties, Inc.
   b. Bobrick Washroom Equipment, Inc.
   c. Bradley Corporation.

2. Description: High-speed, warm-air hand dryer for rapid hand drying.
3. Mounting: Surface mounted.
4. Operation: Electronic-sensor activated.
5. Cover Material and Finish: Brushed Stainless steel, No. 4 finish (satin).
6. Electrical Requirements: As indicated on Drawings.

C. Accessories:

1. 1.1 inch Noise Reduction Nozzle.
2. ADA-Compliant Recess Kit (40502)., Brushed Stainless steel.

2.6 MATERIALS

A. Stainless Steel: ASTM A 666, Type 304, 0.0312-inch minimum nominal thickness, unless otherwise indicated.

NOT FOR BIDDING PURPOSES

B. Steel Sheet: ASTM A 1008/A 1008M, Designation CS (cold rolled, commercial steel), 0.0359inch minimum nominal thickness.

C. Galvanized-Steel Sheet: ASTM A 653/A 653M, with G60 hot-dip zinc coating.

D. Galvanized Steel Mounting Devices: ASTM A 153/A 153M, hot-dip galvanized after fabrication.

E. Fasteners: Screws, bolts, and other devices of same material as accessory unit and tamper-and-theft resistant where exposed, and of galvanized steel where concealed.

F. Mirrors: ASTM C 1503, Mirror Glazing Quality, clear-glass mirrors, nominal 6.0 mm thick.

G. ABS Plastic: Acrylonitrile-butadiene-styrene resin formulation.

2.7 FABRICATION

A. General: Fabricate units with tight seams and joints, and exposed edges rolled. Hang doors and access panels with full-length, continuous hinges. Equip units for concealed anchorage and with corrosion-resistant backing plates.

B. Keys: Provide universal keys for internal access to accessories for servicing and resupplying. Provide minimum of six keys to Owner's representative.

PART 3 - EXECUTION

3.1 INSTALLATION

A. Install accessories according to manufacturers' written instructions, using fasteners appropriate to substrate indicated and recommended by unit manufacturer. Install units level, plumb, and firmly anchored in locations and at heights indicated.

B. Grab Bars: Install to withstand a downward load of at least 250 lbf, when tested according to method in ASTM F 446.

3.2 ADJUSTING AND CLEANING

A. Adjust accessories for unencumbered, smooth operation. Replace damaged or defective items.

B. Remove temporary labels and protective coatings.

C. Clean and polish exposed surfaces according to manufacturer's written recommendations.

END OF SECTION 10 28 00

NOT FOR BIDDING PURPOSES

NOT FOR BIDDING PURPOSES

SECTION 10 44 13

FIRE PROTECTION CABINETS

PART 1 - GENERAL

1.1 RELATED DOCUMENTS

A. Drawings and general provisions of the Contract, including General and Supplementary Conditions and Division 01 Specification Sections, apply to this Section.

1.2 SUMMARY

A. Section Includes:

1. Fire protection cabinets for the following:
   a. Portable fire extinguishers.

1.3 PREINSTALLATION CONFERENCE

A. Preinstallation Conference: Conduct conference at Project site.

1. Review methods and procedures related to fire-protection cabinets including, but not limited to, the following:
   a. Schedules and coordination requirements.

1.4 ACTION SUBMITTALS

A. Product Data: For each type of product. Show door hardware, cabinet type, trim style, and panel style. Include roughing-in dimensions and details showing recessed-, semirecessed-, or surface-mounting method and relationships of box and trim to surrounding construction.

B. Shop Drawings: For fire-protection cabinets. Include plans, elevations, sections, details, and attachments to other work.

C. Product Schedule: For fire-protection cabinets. Indicate whether recessed, semirecessed, or surface mounted. Coordinate final fire-protection cabinet schedule with fire-extinguisher schedule to ensure proper fit and function. Use same designations indicated on Drawings.

1.5 CLOSEOUT SUBMITTALS

A. Maintenance Data: For fire-protection cabinets to include in maintenance manuals.

1.6 COORDINATION

A. Coordinate size of fire protection cabinets to ensure that type and capacity of fire extinguishers indicated are accommodated.

B. Coordinate sizes and locations of fire protection cabinets with wall depths.

1.7 SEQUENCING

A. Apply decals or vinyl lettering on field-painted, fire protection cabinets after painting is complete.

PART 2 - PRODUCTS

2.1 PERFORMANCE REQUIREMENTS

A. Fire-Rated Fire-Protection Cabinets: Listed and labeled to comply with requirements in ASTM E 814 for fire-resistance rating of walls where they are installed.

2.2 FIRE PROTECTION CABINET

A. Cabinet Type: Suitable for fire extinguisher.

1. Manufacturers: Subject to compliance with requirements, available manufacturers offering products that may be incorporated into the Work include, but are not limited to the following:
   a. JL Industries, Inc.; a division of the Activar Construction Products Group.
   b. Larsens Manufacturing Company.
   c. Potter Roemer LLC.

B. Cabinet Construction: Nonrated.

C. Cabinet Material: Cold-rolled steel sheet.

1. Shelf: Same metal and finish as cabinet.

D. Semirecessed Cabinet: One-piece combination trim and perimeter door frame overlapping surrounding wall surface with exposed trim face and wall return at outer edge (backbend).

1. Square-Edge Trim: 1-1/4- to 1-1/2-inch backbend depth.

E. Cabinet Trim Material: Aluminum sheet.

F. Door Material: Aluminum sheet.

G. Door Style: Full acrylic bubble with frame.

H. Door Glazing: Molded acrylic bubble.

1. Acrylic Bubble Color: Clear, transparent.

I. Door Hardware: Manufacturer's standard door-operating hardware of proper type for cabinet type, trim style, and door material and style indicated.
1. Provide projecting lever handle with cam-action latch.
2. Provide manufacturer's standard hinge permitting door to open 180 degrees.

NOT FOR BIDDING PURPOSES

J. Materials:

1. Cold-Rolled Steel: ASTM A 1008/A 1008M, Commercial Steel (CS), Type B.
   a. Finish: Baked enamel or powder coat.
   b. Color: As selected by Architect from full range of industry colors and color densities.

2. Aluminum: ASTM B 221, with strength and durability characteristics of not less than Alloy 6063-T5 for aluminum sheet. ASTM B 221 for extruded shapes.
   a. Finish: Clear anodic.

3. Transparent Acrylic Sheet: ASTM D 4802, Category A-1 (cell-cast sheet), with Finish 1 (smooth or polished).

2.3 FABRICATION

A. Fire Protection Cabinets: Provide manufacturer's standard box (tub) with trim, frame, door, and hardware to suit cabinet type, trim style, and door style indicated.

1. Weld joints and grind smooth.
2. Provide factory-drilled mounting holes.
3. Prepare doors and frames to receive locks.
4. Install door locks at factory.

B. Cabinet Doors: Fabricate doors according to manufacturer's standards, from materials indicated and coordinated with cabinet types and trim styles selected.

1. Fabricate door frames with tubular stiles and rails and hollow-metal design, minimum 1/2 inch thick.
2. Fabricate door frames of one-piece construction with edges flanged.
3. Miter and weld perimeter door frames.

C. Cabinet Trim: Fabricate cabinet trim in one piece with corners mitered, welded, and ground smooth.

2.4 GENERAL FINISH REQUIREMENTS

A. Comply with NAAMM's "Metal Finishes Manual for Architectural and Metal Products" for recommendations for applying and designating finishes.

B. Protect mechanical finishes on exposed surfaces of fire protection cabinets from damage by applying a strippable, temporary protective covering before shipping.

C. Finish fire protection cabinets after assembly.

D. Appearance of Finished Work: Noticeable variations in same piece are not acceptable. Variations in appearance of adjoining components are acceptable if they are within the range of approved Samples and are assembled or installed to minimize contrast.

PART 3 - EXECUTION

3.1 EXAMINATION

NOT FOR BIDDING PURPOSES

A. Examine walls and partitions for suitable framing depth and blocking where recessed and semi-recessed cabinets will be installed.

B. Proceed with installation only after unsatisfactory conditions have been corrected.

3.2 PREPARATION

A. Prepare recesses for recessed and semi-recessed fire protection cabinets as required by type and size of cabinet and trim style.

3.3 INSTALLATION

A. General: Install fire-protection cabinets in locations and at mounting heights indicated or, if not indicated, at heights indicated below:

1. Fire-Protection Cabinets: 54 inches above finished floor to top of cabinet.

B. Fire Protection Cabinets: Fasten cabinets to structure, square and plumb.

1. Unless otherwise indicated, provide recessed fire protection cabinets. If wall thickness is not adequate for recessed cabinets, provide semi-recessed fire protection cabinets.
2. Fasten mounting brackets to inside surface of fire protection cabinets, square and plumb.

C. Identification: Apply decals at locations indicated.

3.4 ADJUSTING AND CLEANING

A. Remove temporary protective coverings and strippable films, if any, as fire protection cabinets are installed unless otherwise indicated in manufacturer's written installation instructions.

B. Adjust fire protection cabinet doors to operate easily without binding. Verify that integral locking devices operate properly.

C. On completion of fire protection cabinet installation, clean interior and exterior surfaces as recommended by manufacturer.

D. Touch up marred finishes, or replace fire protection cabinets that cannot be restored to factory-finished appearance. Use only materials and procedures recommended or furnished by fire protection cabinet and mounting bracket manufacturers.

E. Replace fire protection cabinets that have been damaged or have deteriorated beyond successful repair by finish touchup or similar minor repair procedures.

END OF SECTION 10 44 13

NOT FOR BIDDING PURPOSES

NOT FOR BIDDING PURPOSES

SECTION 10 44 16

FIRE EXTINGUISHERS

PART 1 - GENERAL

1.1 RELATED DOCUMENTS

A. Drawings and general provisions of the Contract, including General and Supplementary Conditions and Division 01 Specification Sections, apply to this Section.

1.2 SUMMARY

A. Section includes portable, hand-carried fire extinguishers.

1.3 PREINSTALLATION MEETINGS

A. Preinstallation Conference: Conduct conference at Project site.

1. Review methods and procedures related to fire extinguishers including, but not limited to, the following:

a. Schedules and coordination requirements.

1.4 ACTION SUBMITTALS

A. Product Data: For each type of product indicated. Include rating and classification, material descriptions, dimensions of individual components and profiles, and finishes for fire extinguisher.

B. Product Schedule: For fire extinguishers. Coordinate final fire extinguisher schedule with fire protection cabinet schedule to ensure proper fit and function. Use same designations indicated on Drawings.

1.5 INFORMATIONAL SUBMITTALS

A. Warranty: Sample of special warranty.

1.6 CLOSEOUT SUBMITTALS

A. Operation and Maintenance Data: For fire extinguishers to include in maintenance manuals.

1.7 COORDINATION

A. Coordinate type and capacity of fire extinguishers with fire-protection cabinets to ensure fit and function.

B. Coordinate type and capacity of fire extinguishers with fire protection cabinets to ensure fit and function.

1.8 WARRANTY

A. Special Warranty: Manufacturer's standard form in which manufacturer agrees to repair or replace fire extinguishers that fail in materials or workmanship within specified warranty period.

1. Failures include, but are not limited to, the following:

a. Failure of hydrostatic test according to NFPA 10.
b. Faulty operation of valves or release levers.

2. Warranty Period: Six years from date of Substantial Completion.

PART 2 - PRODUCTS

2.1 PERFORMANCE REQUIREMENTS

A. NFPA Compliance: Fabricate and label fire extinguishers to comply with NFPA 10, "Portable Fire Extinguishers."

B. Fire Extinguishers: Listed and labeled for type, rating, and classification by an independent testing agency acceptable to authorities having jurisdiction.

1. Provide fire extinguishers approved, listed, and labeled by FM Global.

2.2 PORTABLE, HAND-CARRIED FIRE EXTINGUISHERS

A. Fire Extinguishers: Type, size, and capacity for each fire protection cabinet and mounting bracket.

1. Manufacturers: Subject to compliance with requirements, available manufacturers offering products that may be incorporated into the Work include, but are not limited to, the following:

a. J. L. Industries, Inc.
b. Larsen's Manufacturing Company.
c. Potter Roemer LLC.

2. Valves: Manufacturer's standard.
3. Handles and Levers: Manufacturer's standard.
4. Instruction Labels: Include pictorial marking system complying with NFPA 10, Appendix B and bar coding for documenting fire extinguisher location, inspections, maintenance, and recharging.

B. Wet-Chemical Type: UL-rated 2-A:1-B:C:K, 1.6-gal. nominal capacity, with potassium acetate-based chemical in stainless-steel container; with pressure-indicating gage.

C. Multipurpose Dry-Chemical Type in Steel Container: UL-rated 4-A:80-B:C, 10-lb nominal capacity, with monoammonium phosphate-based dry chemical in enameled-steel container.

2.3 MOUNTING BRACKETS

NOT FOR BIDDING PURPOSES

A. Mounting Brackets (Where not indicated to be in cabinets): Manufacturer's standard steel, designed to secure fire extinguisher to wall or structure, of sizes required for types and capacities of fire extinguishers indicated, with red or black baked-enamel finish.

1. Manufacturers: Subject to compliance with requirements, available manufacturers offering products that may be incorporated into the Work include, but are not limited to the following:

a. JL Industries, Inc.; a division of the Activar Construction Products Group.
b. Larsens Manufacturing Company.
c. Potter Roemer LLC.

PART 3 - EXECUTION

3.1 EXAMINATION

A. Examine fire extinguishers for proper charging and tagging.

1. Remove and replace damaged, defective, or undercharged fire extinguishers.

B. Proceed with installation only after unsatisfactory conditions have been corrected.

3.2 INSTALLATION

A. General: Install fire extinguishers and mounting brackets in locations indicated and in compliance with requirements of authorities having jurisdiction.

1. Mounting Brackets: 54 inches above finished floor to top of fire extinguisher.

B. Mounting Brackets: Fasten mounting brackets to surfaces, square and plumb, at locations indicated.

END OF SECTION 10 44 16

NOT FOR BIDDING PURPOSES

THIS PAGE INTENTIONALLY LEFT BLANK

NOT FOR BIDDING PURPOSES

SECTION 10 51 13

METAL LOCKERS

NOT FOR BIDDING PURPOSES

PART 1 - GENERAL

1.1 RELATED DOCUMENTS

A. Drawings and general provisions of the Contract, including General and Supplementary Conditions and Division 01 Specification Sections, apply to this Section.

1.2 SUMMARY

A. Section Includes:

1. Knocked-down lockers.

1.3 PREINSTALLATION MEETINGS

A. Preinstallation Conference: Conduct conference at Project site.

1.4 ACTION SUBMITTALS

A. Product Data: For each type of product.

1. Include construction details, material descriptions, dimensions of individual components and profiles, and finishes for each type of metal locker.

B. Shop Drawings: For metal lockers.

1. Include plans, elevations, sections, and attachment details.
2. Show locker trim and accessories.
3. Include locker identification system and numbering sequence.

C. Samples for Initial Selection: Manufacturer's color charts showing the full range of colors available.

D. Product Schedule: For lockers. Use same designations indicated on Drawings.

1.5 INFORMATIONAL SUBMITTALS

A. Qualification Data: For Installer.

B. Sample Warranty: For special warranty.

1.6 CLOSEOUT SUBMITTALS

A. Maintenance Data: For adjusting, repairing, and replacing locker doors and latching mechanisms to include in maintenance manuals.

1.7 MAINTENANCE MATERIAL SUBMITTALS

A. Furnish extra materials that match products installed and that are packaged with protective covering for storage and identified with labels describing contents.

1. The following metal locker hardware items equal to 10 percent of amount installed for each type and finish installed, but no fewer than five units:

a. Locks.
b. Blank identification plates.
c. Hooks.

1.8 DELIVERY, STORAGE, AND HANDLING

A. Do not deliver metal lockers until spaces to receive them are clean, dry, and ready for their installation.

1.9 FIELD CONDITIONS

A. Field Measurements: Verify actual dimensions of recessed openings by field measurements before fabrication.

1.10 COORDINATION

A. Coordinate sizes and locations of framing, blocking, furring, reinforcements, and other related units of work specified in other Sections to ensure that metal lockers can be supported and installed as indicated.

1.11 WARRANTY

A. Special Warranty: Manufacturer agrees to repair or replace components of metal lockers that fail in materials or workmanship, excluding finish, within specified warranty period.

1. Warranty Period for Knocked-Down Metal Lockers: Two years from date of Substantial Completion.

PART 2 - PRODUCTS

2.1 PERFORMANCE REQUIREMENTS

A. Accessibility Requirements: For lockers indicated to be accessible, comply with applicable provisions in the U.S. Architectural & Transportation Barriers Compliance Board's ADA-ABA Accessibility Guidelines and ICC A117.1.

NOT FOR BIDDING PURPOSES

2.2 KNOCKED-DOWN LOCKERS

A. Manufacturers: Subject to compliance with requirements, available manufacturers offering products that may be incorporated into the Work include, but are not limited to the following:

1. ASI Storage Solutions; ASI Group.
2. List Industries Inc.
3. Lyon Workspace Products, LLC.
4. Penco Products, Inc.
5. Republic Storage Systems, LLC.

B. Doors: One piece; fabricated from 0.060-inch nominal-thickness steel sheet; formed into channel shape with double bend at vertical edges and with right-angle single bend at horizontal edges.

1. Doors less than 12 inches wide may be fabricated from 0.048-inch nominal-thickness steel sheet.
2. Reinforcement: Manufacturer's standard reinforcing angles, channels, or stiffeners for doors more than 15 inches wide; welded to inner face of doors.
3. Stiffeners: Manufacturer's standard full-height stiffener fabricated from 0.048-inch nominal-thickness steel sheet; welded to inner face of doors.
4. Sound-Dampening Panels: Manufacturer's standard, designed to stiffen doors and reduce sound levels when doors are closed, of die-formed metal with full perimeter flange and sound-dampening material; welded to inner face of doors.
5. Door Style: Vented panel as follows:

   a. Louvered Vents: No fewer than three louver openings.

C. Body: Assembled by riveting or bolting body components together. Fabricate from unperforated steel sheet as follows:

1. Tops, Bottoms, and Intermediate Dividers: 0.024-inch nominal thickness, with single bend at sides.
2. Backs and Sides: 0.024-inch nominal thickness, with full-height, double-flanged connections.
3. Shelves: 0.024-inch nominal thickness, with double bend at front and single bend at sides and back.

D. Frames: Channel formed; fabricated from 0.060-inch nominal-thickness steel sheet; lapped and factory welded at corners; with top and bottom main frames factory welded into vertical main frames. Form continuous, integral, full height door strikes on vertical main frames.

E. Hinges: Welded to door and attached to door frame with no fewer than two factory-installed rivets per hinge that are completely concealed and tamper resistant when door is closed; fabricated to swing 180 degrees.

1. Knuckle Hinges: Steel, full loop, five knuckles, tight pin; minimum 2 inches high.

F. Recessed Door Handle and Latch: Stainless-steel cup with integral door pull, recessed so locking device does not protrude beyond face of door; pry and vandal resistant.

1. Multipoint Latching: Finger-lift latch control designed for use with padlocks; positive automatic latching and prelocking.

NOT FOR BIDDING PURPOSES

a. Latch Hooks: Equip doors 48 inches and higher with three latch hooks; fabricated from 0.105-inch nominal-thickness steel sheet; welded or riveted to full-height door strikes; with resilient silencer on each latch hook.
b. Latching Mechanism: Manufacturer's standard, rattle-free latching mechanism and moving components isolated, with vinyl or nylon to prevent metal-to-metal contact, and incorporating a prelocking device that allows locker door to be locked while door is open and then closed without unlocking or damaging lock or latching mechanism.

G. Locks: Combination padlocks.

H. Identification Plates: Manufacturer's standard, etched, embossed, or stamped aluminum plates, with numbers and letters at least 3/8-inch high.

I. Hooks: Manufacturer's standard ball-pointed hooks, aluminum or steel; zinc plated.

J. Continuous Zee Base: Fabricated from manufacturer's standard thickness, but not less than 0.060-inch nominal-thickness steel sheet.

1. Height: 4 inches.

K. Continuous Sloping Tops: Fabricated from manufacturer's standard thickness, but not less than 0.036-inch nominal-thickness steel sheet.

1. Closures: Vertical-end type.

L. Finished End Panels: Fabricated from 0.024-inch nominal-thickness steel sheet to cover unused penetrations and fasteners, except for perimeter fasteners, at exposed ends of nonrecessed metal lockers; finished to match lockers.

M. Materials:

1. Cold-Rolled Steel Sheet: ASTM A 1008/A 1008M, suitable for exposed applications.

N. Finish: Baked enamel.

1. Color(s): Refer to Section 090600.

2.3 LOCKS

A. Combination Padlock: Provided by Owner.

2.4 FABRICATION

A. Fabricate metal lockers square, rigid, without warp, and with metal faces flat and free of dents or distortion. Make exposed metal edges safe to touch and free of sharp edges and burrs.

1. Form body panels, doors, shelves, and accessories from one-piece steel sheet unless otherwise indicated.
2. Provide fasteners, filler plates, supports, clips, and closures as required for complete installation.

NOT FOR BIDDING PURPOSES

B. Fabricate each metal locker with an individual door and frame; individual top, bottom, and back; and common intermediate uprights separating compartments.

C. Equipment: Provide each locker with an identification plate and the following equipment:

1. Double-Tier Units: One double-prong ceiling hook and two single-prong wall hooks.

D. Knocked-Down Construction: Fabricate metal lockers using nuts, bolts, screws, or rivets for nominal assembly at Project site.

E. Accessible Lockers: Fabricate as follows:

1. Locate bottom shelf no lower than 15 inches above the floor.

F. Continuous Zee Base: Fabricated in lengths as long as practical to enclose base and base ends; finished to match lockers.

G. Continuous Sloping Tops: Fabricated in lengths as long as practical, without visible fasteners at splice locations; finished to match lockers.

H. Filler Panels: Fabricated in an unequal leg angle shape; finished to match lockers. Provide slip-joint filler angle formed to receive filler panel.

I. Finished End Panels: Designed for concealing unused penetrations and fasteners, except for perimeter fasteners, at exposed ends of nonrecessed metal lockers; finished to match lockers.

2.5 ACCESSORIES

A. Fasteners: Zinc-or nickel-plated steel, slotless-type, exposed bolt heads; with self-locking nuts or lock washers for nuts on moving parts.

B. Anchors: Material, type, and size required for secure anchorage to each substrate.

1. Provide nonferrous-metal or hot-dip galvanized anchors and inserts on inside face of exterior walls, and elsewhere as indicated, for corrosion resistance.
2. Provide toothed-steel or lead expansion sleeves for drilled-in-place anchors.

PART 3 - EXECUTION

3.1 EXAMINATION

A. Examine walls and floors or support bases, with Installer present, for compliance with requirements for installation tolerances and other conditions affecting performance of the Work.

B. Prepare written report, endorsed by Installer, listing conditions detrimental to performance of the Work.

C. Proceed with installation only after unsatisfactory conditions have been corrected.

NOT FOR BIDDING PURPOSES

3.2 INSTALLATION

A. General: Install lockers level, plumb, and true; shim as required, using concealed shims.

1. Anchor locker runs at ends and at intervals recommended by manufacturer, but not more than 36 inches o.c. Using concealed fasteners, install anchors through backup reinforcing plates, channels, or blocking as required to prevent metal distortion.
2. Anchor single rows of metal lockers to walls near top and bottom of lockers.
3. Anchor back-to-back metal lockers to floor.

B. Knocked-Down Lockers: Assemble with manufacturer's standard fasteners, with no exposed fasteners on door faces or face frames.

C. Equipment:

1. Attach hooks with at least two fasteners.
2. Attach door locks on doors using security-type fasteners.
3. Identification Plates: Identify metal lockers with identification indicated on Drawings.

a. Attach plates to each locker door, near top, centered, with at least two aluminum rivets.

D. Trim: Fit exposed connections of trim, fillers, and closures accurately together to form tight, hairline joints, with concealed fasteners and splice plates.

1. Attach recess trim to recessed metal lockers with concealed clips.
2. Attach filler panels with concealed fasteners. Locate filler panels where indicated on Drawings.
3. Attach finished end panels using fasteners only at perimeter to conceal exposed ends of nonrecessed metal lockers.

3.3 ADJUSTING

A. Clean, lubricate, and adjust hardware. Adjust doors and latches to operate easily without binding.

3.4 PROTECTION

A. Protect metal lockers from damage, abuse, dust, dirt, stain, or paint. Do not permit use during construction.

B. Touch up marred finishes, or replace metal lockers that cannot be restored to factory-finished appearance. Use only materials and procedures recommended or furnished by locker manufacturer.

END OF SECTION 10 51 13

NOT FOR BIDDING PURPOSES

SECTION 10 75 16

GROUND-SET FLAGPOLES

NOT FOR BIDDING PURPOSES

PART 1 - GENERAL

1.1 SUMMARY

A. Scope of Section: Provide aluminum flagpole as shown on drawing and as specified herein, with components as needed for a complete installation.

B. Owner-Furnished Material: Flags.

1.2 ACTION SUBMITTALS

A. Product Data: For each type of product.

1. Include construction details and manufacturer's technical data, including material descriptions, dimensions of individual components and profiles, operating characteristics, fittings, accessories, finishes for flagpoles and standard installation instructions.

1.3 DELIVERY, STORAGE, AND HANDLING

A. Spiral wrap flagpoles with heavy paper and enclose in a hard fiber tube or other protective container. Store bare flagpoles in a dry location, protected from the weather and moisture, as recommended by the manufacturer.

PART 2 - PRODUCTS

2.1 MANUFACTURERS

A. Source Limitations: Obtain flagpoles as complete units, including fittings, accessories, bases, and anchorage devices, from single source from single manufacturer.

B. ACCEPTABLE MANUFACTURERS

1. Eder flag Manufacturing Company, Inc., Pole-Tech Company Inc., Ewing Flagpoles, or an approved equivalent manufacturer.

2.2 PERFORMANCE REQUIREMENTS

A. Structural Performance: Flagpole assemblies, including anchorages and supports, shall withstand design loads indicated within limits and under conditions indicated.

1. Wind Loads: Determine according to NAAMM FP 1001-07. Basic wind speed for Project location is 100 mph.

2. Base flagpole design on nylon or cotton flags of maximum standard size suitable for use with flagpole or flag size indicated, whichever is more stringent.

2.3 ALUMINUM FLAGPOLES

A. Aluminum Flagpoles: Cone-tapered flagpoles fabricated from seamless extruded tubing complying with ASTM B 241/B 241M, Alloy 6063, with a minimum wall thickness of 3/16 inch.

B. Exposed Height: Between 23 and 25 feet.

C. Construct flagpoles in one piece.

D. Pivoting Tilt Base: Steel baseplate with channel or rectangular tube uprights, pivot bolt, and locking device for tilting flagpole. Furnish tilting flagpole with steel counterweight box and weights, or furnish with internal counterweight. Furnish base with anchor bolts.

1. Finish: Same as flagpole.
2. Furnish ground spike.

2.4 FITTINGS

A. Finial Ball: Flush-seam ball, sized as indicated or, if not indicated, to match flagpole-butt diameter.

1. 5” – 14 gauge spun aluminum with gold anodic finish.

B. External Halyard: Ball-bearing, nonfouling, revolving truck assembly of cast metal with continuous 5/16-inch-(8-mm) diameter, braided polypropylene halyard and 9-inch (228-mm) cast-metal cleat with fasteners. Finish exposed metal surfaces to match flagpole.

1. Halyards and Cleats: One at each flagpole.
2. Halyard Flag Snaps: Bronze swivel snap hooks with neoprene or vinyl covers. Furnish two per halyard.

2.5 MISCELLANEOUS MATERIALS

A. Concrete: Comply with requirements of Section 033000 – Cast-In-Place Concrete.

2.6 ALUMINUM FINISHES

A. Natural Metal Finishes General: Comply with National Association of Architectural Manufacturers’ (NAAMM) “Metal Finishes Manual for Architectural and Metal Products” for recommendations for applying and designating finishes.

B. Satin Finish: AA-M33, fine, directional, medium satin polish; buff complying with AA-M20; seal aluminum surfaces with clear, hard-coat wax.

NOT FOR BIDDING PURPOSES

PART 3 - EXECUTION

3.1 PREPARATION

A. Foundation Excavation: Excavate to neat clean lines in undisturbed soil. Remove loose soil and foreign matter from excavation and moisten earth before placing concrete. Place and compact drainage material at excavation bottom.

B. Provide forms where required due to unstable soil conditions and for perimeter of flagpole base at grade. Secure and brace forms to prevent displacement during concreting.

C. Anchor Bolts: Locate and secure anchor bolts in forms with templates and brace to prevent displacement during concreting.

D. Place concrete, as specified in Section 033000 – Cast-In-Place Concrete. Compact concrete in place by using vibrators. Moist-cure exposed concrete for no fewer than seven days or use nonstaining curing compound.

E. Trowel exposed concrete surfaces to a smooth, dense finish, free of trowel marks, and uniform in texture and appearance. Provide positive slope for water runoff to perimeter of concrete base.

3.2 FLAGPOLE INSTALLATION

A. General: Install flagpoles where indicated and according to manufacturer's written instructions.

B. Baseplate: Cast anchor bolts in concrete foundation. Install baseplate with support channels on washers placed over leveling nuts on anchor bolts.

C. Install hardware and halyard on pole, secure flagpole to support channels, and install counterweight per manufacturer’s instructions.

D. Adjust until flagpole is plumb. After flagpole is plumb, tighten retaining nuts and fill space under baseplate solidly with nonshrink, nonmetallic grout. Finish exposed grout surfaces smooth and slope 45 degrees away from edges of baseplate.

END OF SECTION 10 75 16

NOT FOR BIDDING PURPOSES

THIS PAGE INTENTIONALLY LEFT BLANK

NOT FOR BIDDING PURPOSES

SECTION 11 00 00

MISCELLANEOUS EQUIPMENT

NOT FOR BIDDING PURPOSES

PART 1 - GENERAL

1.1 RELATED DOCUMENTS

A. Drawings and general provisions of the Contract, including General and Supplementary Conditions and Division 01 Specification Sections, apply to this Section.

1.2 SUMMARY

A. Section Includes:

1. Emergency defibrillator cabinet.
2. High-security Knox Box.

1.3 ACTION SUBMITTALS

A. Product Data: For each type of product indicated. Include operating instructions, dimensions, furnished accessories, and finishes.

PART 2 - PRODUCTS

2.1 EMERGENCY DEFIBRILLATOR CABINET

A. Basis of Design Product: Subject to compliance with requirements, provide products by Modern Metal products (as distributed by nwmedicalsolutions.com); Semi-recessed AED Cabinet with alarm, Item # NWHS00122, or comparable product by one of the following:

1. JL Industries.
2. Larsens Manufacturing Co.
3. Potter-Roemer.

B. Cabinets:

1. Tub Construction: Epoxy finished cold-rolled sheet steel.
2. Configuration: Semi-recessed type
3. Size:

   a. Outer Dimensions: 17-1/2” x 17-1/2” x 6-3/4”

   b. Inside Dimensions: 14” x 14” x 6-3/4”

4. Trim Type: Rolled trim compatible with glazed door panel. White epoxy finish.
5. Door: Alarmed with 9-volt battery alarm and alarm deactivation switch.
6. Door Glazing: Polycarbonate with graphics

7. Cabinet Mounting Hardware: Appropriate to cabinet.

2.2 HIGH SECURITY KEY BOX

A. Basis of Design Product: Subject to compliance with requirements, provide Knox Company; Knox-Box 3200 Series, or comparable product by one of the following:

1. JL Industries.
2. Larsens Manufacturing Co.
3. Potter-Roemer.

B. Provide recessed mount box (with hinged door), with the following features:

1. 1/4” plate steel housing, 1/2” thick steel door, with interior gasket seal and stainless-steel door hinge.
2. Box and lock UL-Listed. Lock to have 1/8” thick stainless-steel dust cover with tamper seal mounting capability.
3. Exterior Dimensions: Recessed mount flange 7"H x 7"W.
4. Lock: UL Listed. Double-action rotating tumblers and hardened steel pins accessed by biased cut key.
5. Finish: Knox-Coat proprietary finishing process.
6. Colors: Aluminum.
7. Recessed Mounting Kit (RMK).

PART 3 -EXECUTION

3.1 INSTALLATION

A. Install units in accordance with manufacturer’s installation instructions.

B. Install units plumb and level in wall openings; height as required by code.

C. Secure rigidly in place

END OF SECTION 11 00 00

NOT FOR BIDDING PURPOSES

NOT FOR BIDDING PURPOSES

SECTION 11 4000 - FOODSERVICE EQUIPMENT

PART 1 GENERAL

1.1 DESCRIPTION

A. Scope: Furnish all labor, materials, services, equipment and appliances required to provide and deliver all foodservice equipment hereinafter specified into the building, uncrate, assemble, hang, set-in-place, level, and completely install, exclusive of final utility connections.

B. Related Work Specified Elsewhere:

1. All plumbing, electrical and ventilating work required in conjunction with commercial foodservice equipment including rough-in to points indicated on mechanical drawings, and final connections from rough-in points, electrical service to points of connection and final connections shall be by Divisions 22, 23 and 26.
2. Refrigeration work will be done by the Kitchen Equipment Contractor except for electrical and plumbing connections to and between compressors, blower coils, controls, etc. These final connections shall be by Divisions 22 and 26.
3. All traps, steam traps, grease traps, line strainers, tail pieces, valves, mixing valves, backflow preventor, stops, shut-offs, and fittings necessary for equipment specified will be furnished and installed under mechanical contract by Division 22 unless specifically called for otherwise under each item.
4. All line and disconnect switches, safety cut-offs and fittings, convenience boxes or other electrical controls, fittings and connections will be furnished and installed under electrical contract by Division 26, unless specifically indicated otherwise in the item specifications. Starting switches for certain specified pieces of foodservice equipment are to be provided by Kitchen Equipment Contractor. Those starting switches, if furnished loose as standard by Foodservice Manufacturers (other than fabricated items), shall be mounted and wired complete under Division 26.
5. Any sleeves or conduit required for refrigeration, syrup tubing, or carbonation tubing will be furnished and installed under Division 22.
6. Unless specifically called for in the Item Specifications, ventilating fans and all duct work between same and ceiling rough-in openings, and from same to discharge opening in building will be furnished and installed by Division 22.

1.2 DEFINITIONS

A. All references to the terms "Contractor", "Kitchen Equipment Contractor", or "K.E.C." in the specifications and/or on the drawings shall be defined to mean the Kitchen Equipment Contractor.

B. All references to the term "Owner" in the specifications and/or on the drawings shall be defined to mean the Owner or Owner's designated representative and the Foodservice Equipment Consultant.

C. All references to the term "Consultant" or "Foodservice Equipment Consultant" in the specifications and/or on the drawings shall be defined to mean **NYIKOS ASSOCIATES, INC.** its employees, and authorized representatives and is referred to throughout the contract documents as if singular in number and masculine in gender.

D. The phrase "The K.E.C. shall" or "by the K.E.C.", as applicable, is understood to be included as a part of each sentence, paragraph or article of these specifications unless otherwise indicated or specified.

1.3 QUALITY ASSURANCE

A. Qualification of Suppliers:

1. Commercial foodservice equipment suppliers shall submit satisfactory evidence of compliance with the following qualifications and conditions to be approved.

   a. Successful completion of jobs of comparable scope.
   b. Have manufacturer's authorization to distribute and install specified factory items of equipment.
   c. Maintain a permanent staff experienced in the installation of foodservice equipment and preparation of professional style rough-in drawings and brochures.
   d. Maintain or have access to fabrication shop meeting N.S.F. requirements. If other than foodservice equipment suppliers own fabrication shop, obtain Consultant approval of fabrication shop desired to be used.
   e. Maintain or have access to a readily available stock of repair and replacement parts, together with authorized service personnel.

B. Qualification of Fabricators:

1. Fabricators shall be an N.S.F. approved organization with trained personnel and facilities to properly design, detail and fabricate equipment in accordance with the specifications and standard details contained herein.
2. Custom fabricated equipment shall bear the National Sanitation Foundation seal of approval and listed as such under N.S.F. Standards No. 2 and No. 33.
3. Only one (1) fabricator shall be used for this project, and all equipment will be fabricated at the same shop. Where units cannot be fully shop-fabricated, complete fabrication at project site.
4. Acceptable fabricators are:

   a. Pro Stainless, Inc., Keyser, WV
   b. Commercial Stainless, Inc., Bloomsburg, PA
   c. Keystone Custom Fabricators, Inc.; Elizabeth, PA.
   d. Southern Equipment Fabricators, Inc.; Columbia, SC
   e. Stainless Unlimited, Inc.; Waldorf, MD
   f. Other fabricators, as approved by Consultant.

C. Qualification of Manufacturers:

NOT FOR BIDDING PURPOSES

1. Manufacturers shall be regularly engaged in the production of items furnished and shall have demonstrated the capability to furnish similar equipment that performs the functions specified or indicated herein.

D. Standard Products:

1. Materials, products, and equipment furnished under this contract shall be the standard items of manufacturers regularly engaged in the production of such materials, products, and equipment and shall be of the manufacturer's latest design that complies with the specifications which have been produced and used successfully on other projects and in similar applications.
2. Discrepancies within contract documents should immediately be brought to the attention of the Consultant in writing for clarification prior to fabrication or ordering of standard items.

1.4 PLANS & SPECIFICATIONS

A. Specifications and drawings have been prepared to form the basis for procurement, erection, start-up and adjustment of all equipment in this contract. Plans and specifications shall be considered as mutually explanatory and work required by one, but not the other, shall be performed as though required by both. Items required by one, but not by the other shall be provided as though required by both. Work shall be accomplished as called for in specifications and shown on drawings, so that all items of equipment shall be completely functional for purpose for which they were designed. When there is any discrepancy between drawings and specifications, drawings shall govern. Bidders should seek clarification in writing of any discrepancies from the Consultant prior to bidding.

1.5 SUBMITTALS

A. General Requirements:

1. Assemble and submit all shop drawings, rough-in drawings, brochures, color samples, etc. as a complete package. There will be no review of partial submittals.
2. Any and all costs, to all trades and parties involved, arising from delay of project due to non-submittal of the complete package by the K.E.C. within a reasonable time period shall be borne solely by the K.E.C.
3. Identify each submittal by project name, date, contractor, submittal name, and any other necessary information to distinguish it from other submittals.

B. Shop Drawings:

1. Submit shop drawings electronically in PDF format, drawn on sheets equal in size to Contract Documents of equipment specified for custom fabrication including all accessories attached to each item.
2. Drawings shall be detailed and fully dimensioned to a minimum scale of 3/4"=1'-0" for plan and elevation views, and 1-1/2"=1'-0" for sections, based on the floor plan(s) and following item specifications. Drawings will be checked for thoroughness, accuracy, completeness, neatness, and returned for corrections, if necessary.

NOT FOR BIDDING PURPOSES

C. Rough-in Drawings:

1. Submit rough-in drawings electronically in PDF format, drawn on sheets equal in size to Contract Documents of detailed arrangement plans professionally prepared from architects dimensioned plans (not traced from Contract Documents) at a minimum scale of 1/4"=1'-0".
2. Equipment Layout Plan showing arrangement of all items specified and identified on schedule of equipment listing item number, description, quantity, manufacturer, model number, and remarks.
3. Ventilation Plan showing dimensioned locations of all duct openings for ventilators and dishmachines identifying size, c.f.m. required (exhaust and supply), static pressures, and connection heights.
4. Plumbing/Electrical Plans showing dimensioned locations, sizes, elevations and capacities of all utility services required for each item of equipment in relation to finished walls, columns, and heights above finished floor.
5. Special Conditions Plan showing exact dimensions and details of all masonry bases, floor depressions, critical partition locations/heights, wall openings, reinforcing for wall and/or ceiling mounted equipment, and conduit locations for soda and compressed gas lines.

D. Equipment Brochures:

1. Submit electronic files in PDF format of manufacturer's illustrations and technical data for approval prior to procurement. All items of Standard Manufacture shall be submitted, including items purchased to be built into fabricated equipment. Each illustration shall be marked to accurately describe the item to be furnished as specified. Include all deviations from standard information (i.e., voltage, phase, load, etc.).
2. Include a separate information sheet ahead of each illustration sheet showing all service connection sizes, electrical requirements, loads, consumptions, and all accessories specified.
3. Manufacturer's suggested schematic drawings for connection of mechanical and electrical services for such items as booster heaters, disposers, or any other item of equipment that may require the same.

E. Miscellaneous Shop Drawings:

1. Submit electronic files in PDF format of manufactured equipment specified requiring clarification and approval such as, walk-in cooler/freezer drawings, ventilator drawings, utility raceway drawings, and refrigeration system drawings.

F. Operation and Maintenance Manuals:

1. Submit electronic files in PDF format for all mechanically operated equipment of standard manufacture. Include operating and cleaning/maintenance instructions, parts listing, recommended parts inventory listing and purchase source, copy of warranties, and similar applicable information.
2. Brochure covers shall bear the job name, date, and name of contractor.

G. Manufacturer's List:

1. The K.E.C. shall submit electronic files in PDF format a list of all manufacturer's representatives of the food service equipment such as convection ovens, ranges, etc., and

NOT FOR BIDDING PURPOSES

their authorized service agencies' addresses and telephone numbers; to be presented after submission of manufacture data.

H. Samples:

1. Samples of materials, products, and fabrication methods, shall be submitted for approval upon request at no additional cost, before proceeding with work.

I. Re-submission Requirements:

1. Shop Drawings:

a. Revise initial drawings as required and resubmit in accordance with submittal procedures.
b. Indicate on drawings all changes which have been made in addition to those requested by Consultant.

2. Product Data and Samples:

a. Submit new data and samples as required for initial submittal.
b. Make all re-submittals within fourteen (14) working days from date of Consultants previous action.

J. Approvals:

1. After approval of the submittals listed above, furnish as many prints and copies as are required for the various trades, the Owner, the Architect, and the Consultant.
2. The approval of the shop drawings will be general and shall not relieve the K.E.C. of responsibility for proper fitting, finishing, quantities, and erection of work in strict accordance with the contract requirements, nor does it relieve him of the responsibility of furnishing material and workmanship not indicated on approved shop drawings but required for the completion of his work.
3. Approval by the Consultant and/or Owner of the manufacturer's data submitted by the K.E.C. does not waive the responsibility of K.E.C. to furnish each item of equipment in complete compliance with the specifications and drawings. Discrepancies between Contract Documents and furnished equipment shall be corrected even after approval and installation of this equipment at no additional cost to the Owner.

1.6 PRODUCT DELIVERY, STORAGE AND HANDLING

A. Delivery:

1. Equipment shall be delivered to the job site only after the building is weather-safe and vandal-safe.

B. Storage:

1. Store equipment in an area convenient to the point of installation in such a way that it is protected from the weather and job hazards.

C. Protection:

NOT FOR BIDDING PURPOSES

1. Wrapping and protective coatings shall remain on all items until ready for use and in the case of stainless steel items, until installation is complete and the job is ready for cleaning.

D. Damage:

1. All responsibility shall rest with the K.E.C. for any damage or loss incurred prior to final acceptance. Such items as may be lost or damaged shall immediately be replaced or repaired to a new condition to the complete satisfaction of and at no additional cost to the Owner.

1.7 JURISDICTION TRADE AGREEMENTS AND RESTRICTIONS

A. Include the work specified, shown or reasonably infer able as part of foodservice equipment. Portions of this work may be subcontracted to those qualified to do such work, as may be necessary because of jurisdictional trade agreements and restrictions.

1.8 REGULATIONS AND CODES

A. Except as otherwise indicated, each item of equipment shall comply with the latest current edition of the following standards as applicable to the manufacture, fabrication, and installation of the work in this section.

1. N.S.F. Standards: Comply with National Sanitation Foundation Standards and criteria, and provide N.S.F. "Seal of Approval" on each manufactured item and major items of custom-fabricated work.
2. U.L. Standards: For electrical components and assemblies, provide either U.L. labeled products or, where no labeling service is available, provide a complete index of the components used as selected from the U.L. "Recognized Component Index".
3. A.N.S.I. Standards: For gas-burning equipment, comply with A.N.S.I. Z21-Series standards. Comply with A.N.S.I. B57.1 for compressed gas cylinder connections and with applicable standards of the Compressed Gas Association for water connection air gaps and vacuum breakers.
4. A.G.A.: All gas-fired equipment shall be A.G.A. Approved, equipped to operate on the type gas available at the job site and shall contain 100% automatic safety shut-off devices.
5. N.F.P.A. Standards: Comply with N.F.P.A. Bulletin 96 for exhaust systems and with N.F.P.A. Bulletins 17 & 96, and U.L. 300 for fire extinguishing systems.
6. A.S.M.E. Code: Comply with A.S.M.E. boiler code requirements for steam generating and steam heated equipment. Provide A.S.M.E. inspection, stamps, and certification of registration with National Board.
7. National Electric Code: Comply with N.E.C. Volume 5 for electrical wiring and devices included with foodservice equipment.
8. All authorities having jurisdiction over this type of equipment and/or installation.
9. Where specifications and/or drawings require mechanical, electrical or refrigeration work to be performed, such work shall be done in strict conformance to other portions of the Base Building Specification which sets forth standards for this type of work.
10. Where there exists two standards or codes for one type of work, the stricter method shall govern.

NOT FOR BIDDING PURPOSES

1.9 WARRANTIES

A. Warrantee in writing all equipment and fabrication against defects and workmanship for a period of two (2) years from date of acceptance.

1. Each piece of mechanical equipment shall be listed, together with the authorized service and repair agency whom the Owner will call should malfunctions occur within the two-year (2) guarantee period.

B. Refrigeration system compressors shall be warranted for five (5) years by the manufacturer. Free refrigeration service, including parts and labor, shall be furnished for two (2) years from date of acceptance, unless otherwise specified.

1.10 JOB CONDITIONS

A. Visit the job site to field check actual wall dimensions and roughing-in and shall be responsible for fabricating and installing the equipment in accordance with the available space and utility services as they exist on the job site.

B. Check all door openings, passageways, elevators, etc., to be sure that the equipment can be conveyed to its proper location within the building and if necessary, check the possibility of holding wall erection, placement of doorjambs, windows, etc. for the purpose of moving the equipment to its proper location with the Contractor. Any removal and rebuilding of walls, partitions, doorjambs, etc. necessary to place the equipment, or if caused by incorrect information on the Contractor's drawings, shall be done at the expense of the K.E.C., at no additional cost to the Owner.

C. Notify the Consultant and Owner before fabrication of equipment of any discrepancies between plans and specifications and actual conditions on the job.

D. Before finished floors, walls, and/or ceilings are in place, physically check the location of all "rough-ins" at the job site. Report discrepancies in writing.

E. Any changes required after fabrication has been started to ensure equipment accurately fitting the space as it exists and conforming to actual field dimensions on the job shall be made at no additional cost to the Owner.

F. If special hoisting equipment and operators are required, include such cost as part of the bid for this work.

1.11 CHANGES IN THE WORK

A. The Owner reserves the right to require reasonable modification to be made in the routing of work and relocation of equipment. This specifically refers to conditions where interference occurs or where more desirable accessibility can be obtained or whose materials cannot be installed because of structural or mechanical conditions encountered. Such changes shall be made at no additional cost to the Owner.

NOT FOR BIDDING PURPOSES

1.12 PATENTS

A. Hold harmless and save the Owner and its officers, consultants, servants and employees from liability of any nature or kind, including costs and expenses for or on account of any copyrighted, patented, or un-patented invention, process, trademark, design, device, material, article, or appliance manufactured or used in the performance of the contract, including its use by the Owner, unless otherwise specifically stipulated in the Contract Documents.

B. If the Contractor has information that the process or article specified is an infringement of a patent, he shall be responsible for such loss unless he promptly gives such information to the Owner in writing. The contract price shall include all royalties or costs arising from the use of any or all of the above which are, in any way, involved in the contract.

1.13 CONTRACTOR'S WARRANTY

A. The Contractor represents and warrants:

1. That he is financially solvent and that he is experienced in and competent to perform the types of work or to furnish the plans, materials, supplies or equipment, to be so performed or furnished by him.
2. That he is familiar with all Federal, State, municipal, and department laws, ordinances, orders, and regulations, which may, in any way, affect the work of those employed therein, including, but not limited to, any special acts relating to the work or to the project of which it is a part.
3. That such temporary and permanent work required by the contract as is to be done by him can be satisfactorily constructed and used for the purpose for which it is intended and that such construction will not injure any person or damage any property.
4. That he has carefully examined the plans, specifications, addenda, if any, and the site of the work and that, from his own investigations, he has satisfied himself as to the nature and location of the work, the character, quality, and quantity of materials likely to be encountered, the character of equipment and other facilities needed for the performance of the work, the general and local conditions, and all other materials which may, in any way, affect the work or its performance.
5. That he has satisfied himself as to the existing openings and accesses to the foodservice area through which his equipment shall be required to pass and that he is responsible for his equipment being delivered in as many sections as necessary to conform to the available space dictated by these existing limitations.

1.14 SUBSTITUTIONS

A. Bids submitted shall be for the specific manufacturer and model, size, capacity, and accessories, as specified or shown on the drawings.

B. The K.E.C. may quote upon brands and models of equipment other than those specified as a substitute, but he must also bid the primary item. In the event that it is desired to request approval of substitute material, product, article, process, or item of equipment in lieu of that which is specified, submit a written request at the time of submitting bid on a separate sheet attached to, but not part of, the base bid, setting forth the proposed substitution in detail, including an itemized analysis of the addition or deduction in the amount of the contract, if any,

NOT FOR BIDDING PURPOSES

which will result if the substitution is approved. Each such request shall include a complete description of the proposed substitute, the name of the material or equipment for which it is to be substituted, drawings, cuts, performance and test data and any other data or information necessary for a complete evaluation.

C. The Contractor shall be held responsible for additional costs to himself or any other prime contractor for changes required to install materials, devices, equipment, etc., which the Contractor has substituted for that specified.

D. The Owner reserves the right to award a contract or contracts based upon the inclusion or exclusion of one or more of the alternate estimates. The description of all workmanship and materials under the various headings of the specifications shall have the same meaning and force when applied to similar workmanship and materials in the alternate. If the descriptions are not specific, the workmanship shall be the best quality and the materials the best commercial grade.

E. Whenever any product is specified in the Contract Documents by reference to the name, trade name, make, or catalog number of any manufacturer or supplier, the intent is not to limit competition but to establish a standard of quality which is necessary for the project. Products of other manufacturers meeting the established criteria will be considered. However, please take note that the plumbing, electrical, steam, heating, ventilating, and air-conditioning drawings prepared by the consulting engineers, have been engineered based on the first product named under each item number designation. Therefore, any other product which is submitted for approval in lieu of the primary item specified, shall conform to the rough-in requirements established for the first product named, as well as physical size and building construction requirements.

F. Any equipment listed, which is not in accordance with the provisions of these specifications, will be rejected. If the Contractor fails to submit for approval within the specified time the list of equipment as required herein, the Consultant shall then have the right to make the final equipment selection. The selection made by the Consultant shall strictly conform to these specifications and will be final and binding, and the items shall be furnished and installed by the Contractor without change in the contract price at the time of completion.

G. It shall be the responsibility of the K.E.C. to prove that substitutions are equal to specified items. **NYIKOS ASSOCIATES, INC.** as the Owner's representative, shall be the determining authority as to the acceptability or equality of the substitutions. <u>No substitutions shall be approved after bids are received.</u>

1.15 DESIGN/MODEL CHANGE, DISCONTINUED ITEMS

A. All equipment specified shall be of latest design. Any improvements made in design and construction of prefabricated items before equipment is actually delivered to the project site, shall be incorporated in equipment, at no additional cost, provided such incorporation does not delay delivery date of equipment.

B. In the event of an item being discontinued after specified and prior to delivery to project site, the K.E.C. shall be responsible for notifying the Consultant in writing of the discontinued item and request an alternate of equal performance, including all accessories, at no additional cost to the Owner.

NOT FOR BIDDING PURPOSES

PART 2 PRODUCTS

2.1 GENERAL

A. The equipment and its component parts shall be new and unused. All items of standard manufactured equipment shall be current models at the time of delivery. All parts subject to wear, breakage, or distortion shall be accessible for adjustment, replacement, and repair.

B. Means shall be provided to ensure adequate lubrication for all moving parts. All oil holes, grease fittings, and filler caps shall be accessible without the use of tools.

C. The design of the equipment shall be such as to provide for safe and convenient operation. Covers or other safety devices shall be provided for all items of equipment presenting safety hazards. Such guards or safety devices shall not present substantial interference to the operation of the equipment. All guards shall provide easy access to the guarded parts.

D. Trim shall not be an acceptable substitute for accuracy and neatness. When trim is required and accepted by the Consultant and the Owner in lieu of rejection of items of equipment, it shall be the K.E.C.'s responsibility to provide same at no additional cost.

E. Unless otherwise specified herein, no material lighter than #20 gauge shall be incorporated into the work. All gauges for sheet iron and sheet steel shall be U.S. Standard Gauges, and finished equipment gauge thickness shall not vary more than 5% plus or minus from the thickness indicated below.

GAUGE	THICKNESS	GAUGE	THICKNESS
#10	0.1406	#16	0.0625
#12	0.1094	#18	0.0500
#14	0.0781	#20	0.0375

F. Materials or work described in words which have a well known and acceptable trade meaning shall be held to refer to such accepted meanings.

G. Adhesives and sealants applied within the building waterproofing envelope: Comply with low-emitting requirements in Division 01 Section “Indoor Air Quality Requirements.”

H. Composite Wood and Laminating Adhesives (shop and field applied): Contain no added urea formaldehyde resins.

2.2 MATERIALS

A. Refrigeration Systems:

1. Self-contained:

a. Whether the units be top-mounted or cabinet-mounted, they shall be started by the K.E.C. and shall be tested for maintenance of temperature.
b. All units shall be furnished with condensate evaporators.

NOT FOR BIDDING PURPOSES

2. Remote: Provide and install complete refrigeration system(s), charged, started, and operating properly, according to the Item Specifications and the following.

   a. Single stage compressors with air-cooled condensers operating within the recommended range of suction discharge pressure of economical operation and within the required capacity.
   b. All units shall be new and factory assembled, to operate with the refrigerant specified. Refrigerant R-404A shall be used for all medium and low temperature applications. Due to the unsettled nature of refrigerants, no refrigerant shall be used with a phase-out date of less than ten (10) years from the date of installation.
   c. Compressors shall be accessible hermetic type, Copeland or approved equal, and shall be equipped with high-low pressure control, liquid line drier, sight glass, suction and discharge vibration eliminator, and head pressure control.
   d. The system shall have a factory mounted and pre-wired control panel complete with main fused disconnect, compressor circuit breakers, contactors, and time clocks wired for single point power connection.
   e. The supporting frame shall be constructed of structural steel, fully welded, and protected against rust and corrosion with one (1) coat primer, and two (2) coats paint, unless otherwise specified.
   f. Systems specified for outdoor installation shall be fully protected in a weather-proofed housing with louvered front panel and hinged top, constructed to resist rust and corrosion, and furnished with low ambient controls. Crankcase heater shall be provided with every compressor.

3. Where specifications call for pre-piped lines (i.e., from a fixture to a valve compartment, etc.), provide such work in strict conformance with other sections of the specifications which set forth standards for this type of work or in conformity with the requirements of the Board of Fire Underwriters or ASHRAE Standards, whichever is greater.
4. Each refrigeration item specification is written to provide minimum specifications and scope of work. All refrigeration equipment shall be designed and installed to maintain the following general temperatures unless otherwise specified.

TYPE	REFRIGERATORS	FREEZERS
a. Walk-In	+35º F./1.7º C.	-10º F./-23.3º C.
b. Reach-In	+35º F./1.7º C.	-10º F./-23.3º C.
c. Undercounter	+35º F./1.7º C.	-10º F./-23.3º C.
d. Fabricated	+35º F./1.7º C.	-10º F./-23.3º C.
e. Cold Pans	+0º F./-17.8º C.	
f. Work Rooms	+50º F./10º C.	

5. Provide (including payment if subcontracted) all electrical and refrigeration components needed by the completed system and complete (or have completed by the respective trades) all connections of and to said components.
6. An evaporator coil defrost system shall be provided and installed by the K.E.C. on all refrigeration systems designed to operate at an evaporator coil temperature of less than +35º F. Evaporator coil units provided without electric defrost feature shall be installed with a solenoid valve in the liquid line, controlled by the time clock so as to shut off the flow of refrigerant and allow the compressor to pump down and shut off by activation of the pressure control switch.

NOT FOR BIDDING PURPOSES

7. Verify the requirements of and provide any or all additional refrigeration specialty(s) or component(s) required or recommended by the manufacturer for proper operation under the specific operating conditions and location of each system specified.
8. Verify and provide manufacturer's certification that the equipment selection hereinafter specified for each refrigeration system is properly sized and shall meet the operating requirements set forth for each system regarding maintaining specified operating temperature, hours of compressor running time, and system pressures and velocities as recommended by the equipment manufacturer(s).
9. All refrigeration systems shall be installed and wired in strict conformance with the manufacturer's instructions and recommendations.

B. Motors and Heating Elements:

1. Motors up to and including 1/2 HP shall be wired for 120 volt, single phase service. Motors larger than 1/2 HP shall be wired for 208 volt, single or three phase service as indicated. Motors shall be of the drip-proof, splash-proof, or totally enclosed type, having a continuous duty cycle and ball bearings, except small timing motors which may have sleeve bearings. All motors shall have windings impregnated to resist moisture. Motors located where subject to deposits of dust, lint, or other similar matter shall be of the totally enclosed type. Motors shall have ample power to operate the machines for which designated under full load operating conditions without exceeding their nameplate ratings. Insulation shall be N.E.M.A. Class B or better.
2. Heating elements having a connected load up to and including 1,000 watts shall be wired for 120 or 208 volt, single phase service, or as indicated on the drawings.

   a. Any heating element larger than 1,000 watts or any combination of elements in one fixture totaling more than 1,000 watts shall be wired for 208 volt single or three phase service, as indicated on the drawings.
   b. Fixtures having multiple heating elements may be wired for three phase service with the load balanced as equally as possible within the fixture.

C. Switches and Controls:

1. Provide recognized commercial grade signals, "on-off" pushbuttons or switches, and other speed and temperature controls as required for operation of each item, complete with pilot lights and permanent graphics, conspicuously labeled, to assist the user of each item.
2. Mount switches and controls directly adjacent the piece of equipment for which it involves, on operator's side of counter body apron, out of view to the public.
3. Provide on or for each motor-driven appliance or electrical heating or control unit, a suitable control switch or starter of the proper type and rating and in accordance with Underwriter's Code wherever such equipment is not built in. All other line switches, safety cut-outs, control panels, fuse boxes, other control fittings and connections, when not an integral part of the unit or furnished loose by the manufacturer will be furnished and installed by the Electrical Contractor, unless otherwise specified. All electrical controls, switches, or devices provided loose for field installation as a part of the item specified shall be installed in the field by the Contractor unless otherwise specified.
4. Appliances shall be furnished complete with motors, driving mechanisms, starters, and controllers, including master switches, timers, cut-outs, reversing mechanisms, and other electrical equipment if and as applicable.

NOT FOR BIDDING PURPOSES

D. Cover Plates:

1. All controls mounted on vertical surfaces of fixtures shall be set into recessed die stamped stainless steel cups, or mounted onto removable cover plates in such a fashion as to not protrude or interfere with the operation of each item.
2. Cover plates shall be furnished and installed for all electrical outlets, receptacles, switches and controls furnished by the K.E.C., and shall match the material and finish of the equipment to which they will be fastened.

E. Wiring and Conduit:

1. Wiring shall be properly protected in N.E.M.A. and U.L. approved metal enclosures. Only rigid steel conduit shall be used, zinc coated where unexposed and chrome plated where exposed. All wiring shall be run concealed wherever possible.
2. All equipment furnished under this contract shall be so wired, wound, or constructed so as to conform with the electrical characteristics at the job site.
3. Wiring and connection diagrams shall be furnished with electrically operated machines and for all electrically wired fabricated equipment.
4. Furnish all foodservice equipment completely wired internally using wire and conduit suitable for a wet location. Where an Electrician's services are required, the work shall be done in the K.E.C.'s factory or at his expense at the job site at no additional cost to the Owner. Provide all electrical outlets and receptacles required to be mounted on or in fabricated equipment and interconnect to a master circuit breaker panel with all wires neatly tagged showing item number, voltage characteristics, and load information. Final connection shall be made by the Electrical Contractor.

F. Cords, Plugs, and Receptacles:

1. The Electrical Contractor shall provide three- or four-wire, grounding-type receptacles for all wall and floor mounted outlets to be used for plug-in equipment with characteristics as noted on the drawings. Provide "Hubbell" three-wire or four-wire grounding-type connectors and neoprene cords installed on each item of plug-in equipment, as indicated on drawings and item specifications.
2. K.E.C. shall coordinate with the Electrical Contractor so that the receptacles provided will match the specific plugs provided as part of the plug-in equipment. Any changes in cords and plugs required in the field due to lack of coordination between the Electrical Contractor and the K.E.C. shall be the latter's responsibility.
3. Reduce the length of all cords furnished with the specified equipment to a suitable or appropriate length so they do not interfere with other equipment or operations.
4. Pedestal receptacles that are part of fabricated equipment exposed to view, shall be similar to T&S Model No. B-1508DD single face, single gang or Model No. B-1528DD single face, double gang.

G. Water Inlets:

1. Water inlets shall be located above the positive water level wherever possible to prevent siphoning of liquids into the water supply system. Wherever conditions shall require a submerged inlet, a suitable type of check valve (except in jurisdictions where check valves are prohibited) and vacuum breaker shall be placed on the fixture to form a part of same to prevent siphoning. Where exposed to view, piping and fittings shall be chrome-plated.

NOT FOR BIDDING PURPOSES

H. Drain Lines:

1. Plumbing Contractor shall provide and install indirect waste lines from equipment which will discharge into floor drains or safe wastes in accordance with Plumbing Rough-In Plans, chrome-plated where exposed. Extend to a point at least 1" (or as required by local codes) above the rim of the floor drain, cut bottom on 45° angle and secure in position.
2. All horizontal piping lines shall be run at the highest possible elevation and not less than 6" above finished floor, through equipment where possible.
3. No exposed piping in or around fixtures or in other conspicuous places shall show tool marks of more than one thread at the fitting.
4. All steam operating valves on or in fabricated and purchased foodservice equipment shall be provided with composition hand wheels, which shall remain reasonably cool in service.
5. Provide suitable pressure regulating valves for all equipment with such components that might reasonably be expected to be affected over a period of time by adverse pressure conditions.

I. Faucets, Valves and Fittings:

1. All sinks shall be fitted with chromium plated, swing spout faucets of same manufacturer throughout as follows, or otherwise specified in Item Specifications.

   a. Prep and Utility Sinks:

      1.) Splash-Mounted:

         a.) T&S Brass and Bronze Works, Inc., Model B-231 with aerator.
         b.) Fisher Manufacturing Company, Model 3253 with aerator.

      2.) Deck-Mounted:

         a.) T&S Brass and Bronze Works, Inc., Model B-221 with aerator.
         b.) Fisher Manufacturing Company, Model 3313 with aerator.

   b. Pot Sinks:

      1.) Splash-Mounted:

         a.) T&S Brass and Bronze Works, Inc., Model B-290.
         b.) Fisher Manufacturing Company, Model 5214.

2. Pre-Rinse Assemblies:

   a. Splash-Mounted:

      1.) T&S Brass and Bronze Works, Inc., Model B-133-BJ with B-109 wall bracket.
      2.) Fisher Manufacturing Company, Model 2210 with 2902-12 wall bracket.

   b. Deck-Mounted:

      1.) T&S Brass and Bronze Works, Inc., Model B-113-BJ with B-510 mixing valve and B-109 wall bracket.
      2.) Fisher Manufacturing Company, Model 2810 with 2805-

NOT FOR BIDDING PURPOSES

CV mixing valve and 2902-12 wall bracket.

3. Vacuum Breakers:

   a. General Use:

      1.) Fisher Manufacturing Company, Model 3990-8000.

   b. Disposers:

      1.) Splash-Mounted:

         a.) T&S Brass and Bronze Works, Inc., Model B-455.
         b.) Fisher Manufacturing Company, Model 3990.

      2.) Deck-Mounted:
         a.) T&S Brass and Bronze Works, Inc., Model B-456.
         b.) Fisher Manufacturing Company, Model 3991.

4. Trough Inlets:

   a. Fisher Manufacturing Company, Model No. 2905.

5. Other specialty faucets, pre-rinse assemblies, vacuum breakers, and trough inlets, as specified under Item Specifications.
6. All sink compartments shall be fitted with 2" NPT male, chrome-plated, brass rotary waste valves complete with overflow assemblies and stainless steel strainers.

   a. Prep and General Utility Sinks:

      1.) Fisher Manufacturing Company, Model No. 6100.

   b. Pot Sinks:

      1.) Fisher Manufacturing Company, Model No. 6102.

7. Refer to Division 22 for all other fittings.

J. Metals and Alloys:

1. Stainless steel sheets shall conform to ASTM 240, Type 302, Condition A, 18-8, of U.S. Standard Gauges as previously indicated under paragraph 2.1.E.

   a. All exposed surfaces shall have a No. 4 finish. A No. 2B finish shall be acceptable on surfaces of equipment not exposed to view.
   b. All sheets shall be uniform throughout in color, finish, and appearance.
   c. Rolled shapes shall be of cold rolled type conforming to ASTM A36.

2. Stainless steel tubing and pipe shall be Type 304, 18-8, having a No. 4 finish, and shall conform to either ASTM A213 if seamless or ASTM A249 if welded.
3. Where galvanized metal is specified, it shall be copper-bearing galvanized iron, cold-rolled, stretcher leveled, bonderized, re-rolled to insure a smooth surface, and used in the largest possible sizes with as few joints as necessary.
4. Galvanizing shall be applied to rolled shapes in conformance with ASTM A123, and to sheets in conformance with ASTM A526, coating designation G-90.

NOT FOR BIDDING PURPOSES

K. Castings:

1. Castings shall consist of corrosion resisting metal (white metal) containing not less than 30% nickel. All castings shall be rough ground, polished, and buffed to bright lustre and free from pit marks, runs, checks, burrs, and other imperfections. In lieu of corrosion resisting metal castings, die-stamped or cast 18-8 stainless steel will be acceptable.

L. Hardware and Casters:

1. All hardware shall be of heavy-duty type, satin finished chromium plated brass, cast or forged or highlighted stainless steel of uniform design. All hardware shall be a well-known brand, and shall be identified by the manufacturer's name and model number for easy replacement of broken or worn parts.
2. Casters on custom-built equipment shall be heavy-duty type, ball bearing, solid or disc wheel, with grease-proof rubber, neoprene, or polyurethane tire. Wheel shall be 5" diameter, minimum width of tread 1-3/16", minimum capacity per caster 250 pounds, unless otherwise noted.

   a. Solid material wheels are to be provided with stainless steel rotating wheel guard.
   b. All casters shall have sealed wheel and swivel bearings, polished plated finish and be N.S.F. approved.
   c. All equipment specified with casters shall have a minimum of two (2) with brakes installed on opposite corners, unless otherwise noted.

M. Locks:

1. When specified, doors and drawers of all custom fabricated or manufactured equipment shall be provided with cylinder locks, disc tumbler type with stainless steel faceplate as manufactured by Standard-Keil Mfg. Co., or approved equal.

   a. Provide two (2) sets of keys for each lock.
   b. All locks shall be keyed alike, except at cashiers stations or unless otherwise specified.

N. Thermometers:

1. All fabricated refrigerated compartments shall be fitted with exterior mounted, adjustable, dial or digital thermometers with flush bezels, and shall be calibrated after installation.

O. Sealants:

1. Sealant, wherever required, shall conform to ASTM C 920; Type S Grade NS, Class 25, Use Nt, with characteristics that when fully cured and washed meets requirements of Food and Drug Administration Regulation 21 CFR 177.2600 and N.S.F. RTV-732 for use in areas where it comes in contact with food.
2. Dow-Corning #780 or General Electric "Silastic", or approved equal, in either clear or approved color to match surrounding surfaces and applied in accordance with sealant manufacturers recommendations for a smooth, sealed finish.

NOT FOR BIDDING PURPOSES

2.3 FABRICATION AND MANUFACTURE

A. Materials and Workmanship:

1. Unless otherwise specified or shown on drawings, all materials shall be new, of best quality, perfect, and without flaws. Material shall be delivered and maintained on the job in an undamaged condition.
2. Fabrication shall be equal to the standards of manufacture used by all first class equipment manufacturers, performed by qualified, efficient, and skilled mechanics of the trades involved.
3. All items of standard equipment shall be the latest model at time of delivery.
4. All fabricated work shall be the product of one manufacturer of uniform design and finish.
5. Each fabricated item of equipment shall include all necessary reinforcing, bracing, and welding with the proper number and spacing of uprights and cross members for strength.
6. Wherever standard sheet sizes will permit, the tops of all tables, shelves, exterior panels of cabinet type fixtures, and all doors and drainboards shall be constructed of a single sheet of metal.
7. Except where required to be removable, all flat surfaces shall be secured to vertical and horizontal bracing members by welding or other approved means to eliminate all buckle, warp, rattle, and wobble. All equipment not braced in a rigid manner and which is subject to rattle and wobble shall be unacceptable, and the K.E.C. shall add additional bracing in an approved manner to achieve acceptance.

B. Sanitary Construction:

1. All fabricated equipment shall be constructed in strict compliance with the standards of the National Sanitation Foundation as outlined in their Bulletin on Food Service Equipment entitled "Standard No. 2" dated October 1952, and in compliance with the local and State Public Health Regulations in which the installation will occur.
2. All fabricated equipment shall bear the N.S.F. "Seal of Approval".

C. Construction Methods:

1. Welding:

   a. All welding shall be the heliarc method with welding rod of the same composition as the sheets or parts welded. Welds shall be complete, strong, and ductile with excess metal ground off and joints finished smooth to match adjoining surfaces; free of mechanical imperfections such as gas holes, pits, cracks, etc., and shall be continuously welded so that the fixtures shall appear as one-piece construction. Butt welds made by spot solder and finished by grinding shall not be acceptable.
   b. Spot welds shall have a maximum spacing of 3". Tack welds shall be of at least 1/4" length, and spaced no greater than 4" from center to center. Weld spacing at the ends of the channel battens shall not exceed 2" centers.
   c. In no case shall soldering be considered as a replacement for welding, nor shall any soldering operation be done where dependence is placed on stability and strength of the joint.
   d. Fixtures shall be shop fabricated of one piece and shipped to the job completely assembled wherever possible. Equipment too large to transport or enter the

NOT FOR BIDDING PURPOSES

building in one piece shall be constructed so that the field joints can be welded at the job site.

e. All exposed joints shall be ground flush with adjoining material and finished to harmonize therewith. Whenever material has been sunk or depressed by welding operation, depression shall be suitably hammered and peened flush with the adjoining surface and ground to eliminate low spots. In all cases the grain of rough grinding shall be removed by successive fine polishing operations.

f. All unexposed welded joints on undershelves of tables or counters of stainless steel shall be suitably coated at the factory with an approved metallic-based paint.

g. After galvanized steel members have been welded, all welds and areas where galvanizing has been damaged shall have a zinc dust coating applied in conformance with Military Specification Number MIL-P-26915.

2. Joints:

a. Butt joints and contact joints, wherever they occur, shall be close fitting and shall not require a filler. Wherever break bends occur, they shall be free of undue extrudence and shall not be flaky, scaly, or cracked in appearance; where such breaks do mar the uniform surface appearance of the material, all such marks shall be removed by suitable grinding, polishing, and finishing. Wherever sheared edges occur, they shall be free of burrs, fins, and irregular projections and shall be finished to obviate all danger of laceration when the hand is drawn over them. In no case shall overlapping materials be acceptable where miters or bullnosed edges occur.

b. Field welded joints shall be ground smooth without dips and irregularities and finished to match original finish.

3. Bolt, Screw and Rivet Construction:

a. All exposed surfaces shall be free from bolt and screw heads. When bolts are required, they shall be of the concealed type and be of similar composition as the metal to which they are applied.

b. Where bolt or screw threads on the interior of fixtures are visible or may come into contact with hands or wiping cloths, they shall be capped with a stainless steel or chrome acorn nut and stainless steel lock washer.

c. If rivets are used to fasten rear paneling to the body of the fixture, such rivets shall be stainless steel. In no case shall iron rivets be used.

4. Sound Deadening:

a. Schnee Butyl-Sealant 1/2" wide rope continuously between all frame members and underside of stainless steel table tops, overshelves and undershelves.

b. Tighten stud bolts for maximum compression of sealant.

5. Hi-Liting:

a. All horizontal edges of stainless steel tops, splashes, tops of raised rolled rims, and edges of all exposed doors, handles and shelf edges shall be hi-lited, in uniform design by grinding with abrasive not coarser than #240 grit, then polishing with compound to a uniform mirror finish.

NOT FOR BIDDING PURPOSES

6. Polishing:

   a. The grain of polishing shall run in the same direction on all horizontal and on all vertical surfaces of each item of fabricated equipment except in the case where the finish of the horizontal sections of each shall terminate in a mitered edge.
   b. Where sinks and adjacent drainboards are equipped with backsplash, the grain of the polishing shall be consistent in direction throughout the length of the backsplash and sink compartment

7. Finishes:

   a. Paint and coatings shall be of an N.S.F. approved type suitable for use in conjunction with foodservice equipment. Such paint or coating shall be durable, non-toxic, non-dusting, non-flaking and mildew resistant, shall comply with all governing regulations, and shall be applied in accordance with the manufacturers recommendations.
   b. All exterior, galvanized parts, exposed members of framework, and wrought steel pipe where specified to be painted shall be cleaned, primed with rust inhibiting primer, de-greased, and finished with two (2) coats of glossy enamel grey hammertone paint, unless otherwise noted.
   c. Where baked enamel finishes are specified, they shall be oven baked on the fixtures for a minimum of 1-1/2 hours at a minimum temperature of 300º Fahrenheit.
   d. Fabricated equipment shall be spray coated with plastic suitable for protecting the equipment during transport and installation. The coating shall be easily removable after the equipment installation is complete at the job site, and final clean-up has begun.

D. Construction:

1. Legs:

   a. All tubular stands for open base tables, sinks, or dishtables shall have legs constructed of 1-5/8" O.D. stainless steel tubing, with 1-1/4" O.D., #16 gauge stainless steel crossbracing running between legs at a point 10" above finished floor.
   b. All joints between legs and crossbracing shall be welded and ground smooth, full 360°F.
   c. The top end of legs shall be closely fitted into fully-enclosed stainless steel conical gussets no less than 3" high, similar to Klein #481-58 or #483-58, or approved equal.
   d. Gussets shall be fully welded to framing reinforcing members, so that, set screw is not visible from front.
   e. Legs without crossrails will not be accepted.
   f. Legs shall be spaced at not more than 5'-6" on centers, unless otherwise specified.

2. Feet:

   a. All tubular legs will be swedged for appearance and close fit to United Show Case #BF-158, or approved equal, fully enclosed, stainless steel bullet-shaped foot.

      1.) The foot shall be threaded into a collar and completely

NOT FOR BIDDING PURPOSES

welded inside the tubular leg to permit a maximum adjustment of 2" without any thread exposure.

2.) Threads shall be National Course Series Class 2 fit or better, machined to prevent end play when foot is at maximum adjustment.

3.) The bullet-shaped foot shall have slightly rounded bottom to protect the floor, and a minimum bearing surface of 3/4" diameter of stainless steel-to-floor contact.

4.) Bottom of tubular leg shall be finished off smoothly to provide a sanitary fitting and prevent the accumulation of grease or other debris.

b. Cabinet type fixtures shall be mounted on 8" high die-stamped, sanitary, two-piece stainless steel legs no less than 2-3/4" in diameter at the top. Component Hardware #A72-0811, or approved equal.

1.) The bottom fully enclosed, stainless steel, bullet-shaped foot threads up into the inside of the upper member, with a male threaded 5/8" bushing to permit maximum adjustment of 2" without thread exposure.

2.) The upper section shall be stamped in a neat design with a flared inverted shoulder and fully welded to a base plate designed for anchoring to the channel underbracing.

3. Table Tops:

a. Tables shall be constructed of stainless steel, and of a thickness not less than #14 gauge with 1-3/4" by 120º rolled edges, or as otherwise specified and detailed.

b. All corners shall be bull-nosed and of the same radius as rolled edges.

c. Joints where required shall be butt-welded and ground smooth to present a uniform one-piece appearance.

d. All tops shall be reinforced on the underside with a fully welded framework of 1-1/2"x1-1/2"x1/8" galvanized steel angles with the framing extending around the top perimeter and crossbraced on 24" maximum centers.

e. 1"x4"x1" galvanized or stainless steel, fully welded, cross channel, closed end members placed at each pair of legs with one (1) channel running lengthwise will also be acceptable.

f. All tops shall be reinforced so that there will be no noticeable deflection.

g. Metal tops where adjacent to walls or other items of equipment, shall be constructed with integral, coved, back and/or endsplashes as required and specified in accordance with the standard details contained herein. Close all ends of splashes.

4. Enclosed Bases:

a. All enclosed bases or cabinet bodies shall be of seamless #18 gauge stainless steel construction, enclosed on the ends and sides as required and called for under each item.

b. Ends of body shall terminate at front or operator's side in a 2" wide mullion, vertical, and completely enclosed. All intermediate mullions shall be completely enclosed.

NOT FOR BIDDING PURPOSES

c. The bases shall be reinforced at the top with a framework of 1-1/2"x1-1/2"x1/8" galvanized angles, with all corners mitered and welded solid.
d. Underside of top shall be reinforced with channels and gussets where necessary. Additional angles and cross members shall be provided to reinforce shelves and support tops under heavy tabletop equipment.
e. Where sinks or other drop-in equipment occur, provide additional reinforcing extending crosswise, both sides of opening.
f. In the case of fixtures fitting against or between walls, the bodies shall be set in 1" or 2" from the wall line, with the tops continuing to the wall line with integral, coved splashes as specified. Extend vertical face of body to the wall line only. This will permit adjustment to wall irregularities. Vertical trim strips will not be accepted.
g. Bodies shall be fitted with counter style stainless steel legs as hereinbefore specified.

5. Drawers:

a. Drawers, where specified, shall have removable pan inserts of #18 gauge stainless steel, and shall be approximately 20"x20"x5" deep unless otherwise specified.

1.) Perimeter top edge shall be flanged out 1/2".
2.) All interior horizontal corners shall be rounded on a 1" radius, and all interior vertical corners shall be rounded on a 2" radius.

b. Fronts shall be double pan #16 gauge stainless steel construction, 1" thick, insulated with a semi-rigid, fiberglass board, unfaced, having a three-pound density.

1.) The top of the drawer face shall be formed as an integral pull by breaking the front pan back on a 45º angle 1", then straight up 1", back to front 1", and then down at the front 3/4".
2.) Drawer front shall have all edges and corners ground smooth with a radius edge pull.
3.) Provide hard rubber button bumpers attached to rear of drawer face at each corner.

c. The drawer shall have an all welded frame of 1"x1", #16 gauge stainless steel angles sized to fit the removable pan insert.
d. Drawers shall operate on #14 gauge full-extension slides with stainless steel roller bearings with hardened and ground raceways, Component Hardware, S52 Series, or approved equal. Slides shall be pitched approximately 3/8" per foot to permit self closing action.
e. Drawers shall be adequately and neatly fitted to the guides to permit easy operation without rattle or binding.
f. Slides and frame shall be reinforced to support a dead weight of 150 pounds when drawer is fully extended.
g. Adjustable stops shall be provided for each drawer at the fully-opened position, and be readily liftable by hand for easy removal of drawer.
h. All drawers not mounted inside a cabinet body shall be completely enclosed in an #18 gauge stainless steel box-type enclosure and suspended from angle framing

NOT FOR BIDDING PURPOSES

under the fixture top. The housing bottom shall be flanged and welded to an #18 gauge stainless steel reinforcing channel extending across the open end.

6. Sliding Doors:

   a. Sliding doors shall be of the double pan type, with the exterior pan constructed of #18 gauge stainless steel with all four sides channeled and corners welded. The interior pan shall be similarly constructed of #20 gauge stainless steel, set into the exterior pan, and welded in place.
   b. All doors shall be insulated with semi-rigid fiberglass board, un-faced, having a three-pound density. Styrofoam shall not be acceptable.
   c. Doors 18" wide or greater, shall have internally welded 4" wide reinforcing channels to prevent warpage.
   d. Each door shall be fitted with a positive flush-type stainless steel pull, Standard-Kiel #1262-1014-1283 recessed handle, or approved equal.
   e. In the back of each door install a 1"x1", #16 gauge stainless steel angle stop welded in a suitable location to prevent the doors from overpassing the flush pulls.
   f. Doors in the closed position shall overlap each other by no more than 2".
   g. Each door shall be fitted with two (2), 1-3/8" ball bearing sheaves fastened to 1"x1/8" stainless steel bar stock welded to the top corners of each door for suspending on an overhead #16 gauge stainless steel channel track. The hangers shall be tapped for 1/4"-20 thumb screw vertical locks which prevent the doors from jumping the track in operation while permitting easy removal for cleaning without tools.
   h. Insure that the bottom of the doors are positively and continuously guided to assure proper alignment and passing regardless of the position of each door.
   i. Provide hard rubber bumpers for doors to close against to insure quiet operation.

7. Hinged Doors:

   a. Hinged doors shall be of the same materials and construction as sliding doors previously specified.
   b. Hinges shall be heavy duty, stainless steel, removable type, and fastened by tapping into 1/4"x3/4" stainless steel bar stock inside the door pan and behind the door jamb.
   c. The door face shall be flush with the cabinet body when fully closed.
   d. Size widths of doors equally when installed in pairs, or in series with other pairs, with no door being greater than 36" in width.
   e. Doors shall be held closed by permanent magnetic closure devices of an approved type and of sufficient strength to hold the doors shut. Install two (2) per door (minimum), mounted to the door jamb, top and bottom, with opposing chrome-plated steel plates securely fastened to the inner panel of the doors.

8. Undershelves:

   a. All open base tables shall be provided with full-length undershelves of #16 gauge stainless steel fully welded to legs with all joints ground smooth and polished.
   b. Front edge shall turn down 1-1/2" and under 1/2".
   c. Turn up rear and ends 2", with integral coved radius, when specified.
   d. If required by width, provide 1-1/2"x1-1/2"x1/8" galvanized angle bracing mounted to underside, full length.

NOT FOR BIDDING PURPOSES

9. Interior Shelves:

   a. All interior shelves within cabinet bodies, enclosed bases and overhead cabinets, shall be of #16 gauge stainless steel.
   b. Removable shelves shall be constructed in equal sections, and rest in 1-1/2"x1-1/2"x1/8" stainless steel angle frame. Cove all horizontal corners in accordance with N.S.F. requirements.
   c. Stationary shelves shall have 2" turn-up on back and ends, and continuously welded to cabinet body, polished and ground smooth to form a one-piece interior free of any crevices.
   d. Front edge shall turn down 1-1/2" and under 1/2", and finished with "z" bar forming completely enclosed edge for maximum strength and sanitation.
   e. Provide 1-1/2"x1-1/2"x1/8" angle bracing mounted to underside, full length.

10. Elevated Shelves:

   a. Shelves over equipment not adjacent to a wall shall be mounted on 1" diameter #16 gauge stainless steel tubular standards neatly fitted with stainless steel base flanges, unless otherwise specified.
   b. The top of the tubular standards shall be completely welded to #14 gauge stainless steel support channels, full width of overshelf.
   c. Inside the tubular standard, and welded to same, provide 1/2" diameter steel tension rod extended through countertop and securely anchored to lower framework reinforcing with nuts and lock washers in such a manner as to assure a stable, sway-free structure.
   d. If required by width, provide 1-1/2"x1-1/2"x1/8" stainless steel angle bracing mounted to underside, full length.
   e. Cantilevered shelves, when called for, shall be #16 gauge stainless steel supported on #14 gauge stainless steel brackets welded to 1-5/8" O.D. stainless steel tubular standards extending through the backsplash, and fully welded to the table framework. Provide Klein #481-SH welded sleeves where standards penetrate backsplash.

11. Wall Shelves:

   a. Open wall shelves shall be constructed of #16 gauge stainless steel with back and ends turned up 2", positioned 2" out from face of wall, with all corners welded, and supported on #14 gauge stainless steel brackets.
   b. Brackets shall be flanged inward beneath the shelf and at the wall 1-1/2" with intersecting flanges completely welded, and attached to shelf with studs welded to the underside and bolted with stainless steel lock washers and chrome-plated cap nuts.
   c. Each bracket shall be fastened to the wall with a minimum of two (2) 1/4"-20 stainless steel bolts anchored securely by means of toggles or expansion shields.

12. Sinks:

   a. All sinks shall be the size and shape as shown on drawings, and constructed of #14 gauge stainless steel with backs, bottoms and fronts formed of one continuous sheet and the ends welded in place.

NOT FOR BIDDING PURPOSES

b. Sinks shall have all corners, both vertical and horizontal, coved on a 3/4" radius electrically welded, ground smooth and polished. Solder in filleted corners will not be acceptable.
c. Multiple compartment sinks shall be divided with double wall, #14 gauge stainless steel partitions with a 1/2" radius on top and all corners rounded as other corners, continuously welded, ground smooth and polished.
d. The bottom of each compartment shall be creased to a die stamped recess, tapered and shaped to receive a lever type waste without the use of solder, rivets, or welding.
e. Provide #14 gauge stainless steel waste lever angle bracket mounted to underside of compartment at front.
f. The front and exposed ends of sinks shall be fabricated with a 1-1/2", 180 degree rolled edge. The back and ends adjacent to walls or other fixtures shall be turned up with integral coved edge 12" high and returned 2-1/2" at the top on a 45º angle. Cap ends of all exposed splashes.
g. Unless otherwise specified, two (2) faucet holes on 8" centers shall be provided, located over the centerline of partitions between compartments, 2-1/2" down from splash break.
h. Gussets for legs shall be fully welded all around to #12 gauge stainless steel triangular plates fully welded to underside of sink.
i. Sinks fabricated into working surfaces shall be constructed of the same material and in like manner to sinks specified above, except rolled edge and backsplash shall be omitted and the bowl shall be completely welded integral and flush with the working surface. Where basket type wastes are called for, they shall be fitted with removable seats.
j. Where sink bowls are exposed, the exterior shall also be polished to a #4 finish.

13. Sink Drainboards:

a. Drainboards shall be constructed of the same material as the sinks and shall be welded integral to same.
b. The front portion of drainboards shall continue the 1-1/2", 180º rolled edge of sink bowls on a continuous and level horizontal plane.
c. The surface of the drainboard shall pitch from 2-1/2" at the end furthest from the sink, to 3" at the bowl; or 1/8" per foot. In addition, the bottom surface shall be dished toward the center for complete drainage.
d. The backsplash of the drainboard shall match the rear of the sink contour and shall be welded integral thereto, running parallel to the floor.
e. Drainboards shall be reinforced on the underside with a framework of 1"x4"x1" stainless steel channel underbracing placed at each pair of legs, with exposed ends capped, and one (1) channel running lengthwise.
f. Where disposer cones are fabricated into drainboards, additional 1"x4"x1" stainless steel channels shall be welded into the top framing, spanning the drainboard from front-to-back on both sides of the cone and located not more than 3" to either side.
g. Disposer control panels or switches shall be supported beneath drainboards, when specified, by means of a #12 gauge stainless steel mounting bracket.

14. Dishtable Tops:

NOT FOR BIDDING PURPOSES

a. Dishtables shall be constructed of #14 gauge stainless steel with all corners, both vertical and horizontal, coved on a 3/4" radius electrically welded, ground smooth and polished. Solder in filleted corners will not be acceptable.
b. Fronts and exposed ends shall be fabricated with a 3" high, 1-1/2", 180° rolled edge with rounded corners. The back and ends adjacent to walls or other fixtures shall be turned up with integral coved edge 12" high and returned 2-1/2" at the top on a 45º angle. Cap ends of all exposed splashes.
c. All tops shall slope 1/8" per foot (minimum).
d. Dishtables shall be reinforced on the underside with a framework of 1"x4"x1" stainless steel channel underbracing placed at each pair of legs, with exposed ends capped, and one (1) channel running lengthwise fully welded between front-to-back channels.
e. Where tops fit into dishmachines, they shall turn down and into, forming a sealed watertight fit, and attached according to dishmachine manufacturers instructions.
f. On each side of dishmachine, tables shall be provided with integral splash shields as part of the backsplash.
g. Silicon filling of gaps caused by poor fit will not be acceptable.
h. On corner-type door machines, provide #14 gauge stainless steel wall-mounted, splash panel to protect adjacent wall, full width of door opening.

15. Cafeteria Style Counters:

a. All counters shall be constructed as previously specified under Enclosed Bases.
b. Provide top and bottom framing for each counter food pan, cold pan, coffee urn, ice cream unit, ice bin, dish dispenser, etc., whether a drop-in unit or a cutout for a portable unit.
c. Where plate shelves occur, frame horizontally 8-1/2" back from counter edge or as design dictates, and at bottom of shelf at counteredge.
d. The countertop shall be constructed of #14 gauge stainless steel, as previously specified, with all joints welded, ground and polished.
e. Fronts and exposed ends shall be stainless steel, plastic laminate or other material as noted in the Item Specifications.
f. All display glass shelving shall be 1/4" polished plate glass and fully trimmed with #18 gauge stainless steel formed channels. Top shelves shall be the same width as the shelf below. Shelves shall be supported on 5/8" square, #16 gauge stainless steel perimeter tubing fully welded to 1-1/4" square, #16 gauge stainless steel tubing uprights.
g. Provide appropriate adjustable glass sneeze or breath guards trimmed in stainless steel along front, entire length, mounted in Klein 4465-A brackets.
h. Protector shelf over hot food wells shall be #16 gauge stainless steel supported on 1-1/4" square, #16 gauge stainless steel tubing uprights, with 1/4" polished plate glass front and end panels trimmed in #18 gauge stainless steel channels. When specified for self-service, mount bottom edge of front panel 8" above countertop.
i. All display and protector shelves shall be furnished with full-length fluorescent lights wired to on/off switch in counter apron, with lamps and protective shields. Conceal all wiring in tubular uprights.
j. Refer to Item Specification for changes, as required.
k. Counter shall be internally wired complete by the K.E.C., and in such a way as to meet the requirements of the Electrical Code of the job location.

NOT FOR BIDDING PURPOSES

2.4 EQUIPMENT

A. All items listed on the Contract Documents under the heading "Equipment Schedule" shall be furnished in strict accordance with the foregoing specifications and with the following detailed Itemized Specifications.

B. Manufacturer's names and model numbers are shown establishing quality, size, and finish required, representing the Owner's and Consultant's requirements and basis for bid. Equipment is listed hereinafter with same item numbers as shown on Contract Documents.

PART 3 EXECUTION

3.1 INSPECTION

A. Before beginning the installation of foodservice equipment, the spaces and existing conditions shall be examined by the K.E.C. and any deficiencies, discrepancies, or unsatisfactory conditions for proper installation of foodservice equipment shall be reported to the Architect in writing.

1. Do not proceed with installation until unsatisfactory conditions have been corrected in a manner satisfactory to the installer.
2. Beginning installation shall constitute acceptance of the area.

3.2 PREPARATION

A. Foodservice equipment drawings are diagrammatic and intended to show layout, arrangement, mechanical and electrical requirements.

B. Field verify all measurements at the building prior to fabrication of custom equipment. Coordinate measurements and dimensions with rough-in and space requirements.

3.3 INSTALLATION

A. The K.E.C. shall coordinate his delivery schedule with the Contractor to ensure adequate openings in the building to receive the equipment.

B. Equipment shall be un-crated, fully assembled and set level in position for final connections. Parts shipped loose but required for connection shall be properly tagged and shall be accompanied by the necessary installation instructions.

C. Provide a competent, experienced foreman to supervise installation and final connections with other trades.

D. Remote Refrigeration Systems:

1. All refrigeration work where applicable to this contract shall be accomplished in an approved manner, using finest quality fittings, controls, valves, etc.

NOT FOR BIDDING PURPOSES

2. Refrigeration items shall be started up, tested, adjusted, and turned over to the Owner in first class condition and left running in accordance with the manufacturer's instructions.
3. Refrigeration lines and hook-ups shall be completed by the K.E.C. with the exception of electric, water, and drain line final connections unless otherwise specified.
4. All copper tubing shall be refrigerant grade A.C.R. or type "L".
5. Silver solder and/or Sil-Fos shall be used for all refrigerant piping. Soft solder is not acceptable.
6. All refrigerant lines in pipe sleeves or conduit shall be effectively caulked at ends to prevent entrance of water or vermin and at penetrations through walls or floors.
7. All tubing shall be securely anchored with clamps, and suspended lines shall be supported with adjustable hangers at 6'-0" o.c. maximum.
8. Wrap drain line in freezer compartment(s) with approved heat-tape for final connection by Electrical Contractor.

E. Sealing and Caulking:

1. Prior to the application of sealant, all surfaces shall be thoroughly cleaned and de-greased.
2. Apply around each unit of permanent installation at all intersections with walls, floors, curbs or other permanent items of equipment.
3. Joints shall be air-tight, water-tight, vermin-proof, and sanitary for cleaning purposes.
4. In general, joints shall be not less than 1/8" wide, with backer rod to shape sealant bead properly at 1/4" depth. Shape exposed surfaces of sealant slightly concave, with edges flush with faces of materials at joint.
5. At internal corner joints, apply sealant or gaskets to form a sanitary cove, of not less than 3/8" radius.
6. Provide sealant-filled joints up to 3/4" in joint width. Trim strips for wider joints shall be set in a bed of sealant and attached with stainless steel fasteners, 48" o.c., or less, to insure suitable fastening and prevent buckling of the metals fastened.

F. Cutting:

1. All cutting, fitting, or patching required during installation shall be accomplished by the K.E.C., at his own expense, so as to make the work conform to the plans and specifications.
2. The K.E.C. shall not cut or otherwise alter, except with the consent of the Owner, the work of any other Contractor.
3. Provide cut-outs in foodservice equipment where required to run plumbing, electric, or steam lines through equipment items for final connections.

3.4 FIELD QUALITY CONTROL

A. Inspection:

1. Provide access to shop fabrication areas during normal working hours to facilitate inspection of the equipment, during construction, by the Architect or his authorized representative.
2. Errors found during these inspections shall be corrected to the extent required within the scope of the plans, specifications, and approved drawings.

NOT FOR BIDDING PURPOSES

B. Start-Up and Testing:

1. Delay start-up of foodservice equipment until service lines have been tested, balanced, and adjusted for pressure, voltage, and similar considerations; and until water and steam lines have been cleaned and treated for sanitation.
2. Before testing, lubricate each equipment item in accordance with manufacturer's recommendations.
3. Supply a trained person or persons who shall start up all equipment, test and make adjustments as necessary, resulting in each item of equipment, including controls and safety devices, performing in accordance with the manufacturer's specifications.
4. All gas-fired equipment shall be checked by the local gas company as to calibration, air adjustments, etc., and adjustments made as required.
5. Repair or replace any equipment found to be defective in its operation, including items which are below capacity or operating with excessive noise or vibration.

C. Demonstration:

1. Provide an operating demonstration of all equipment at a time of Owner's convenience, to be held in the presence of authorized representatives of the Architect and Owner.
2. Provide a follow-up kitchen demonstration three (3) months after the initial demonstration or kitchen opening. K.E.C. to coordinate scheduling with manufacturer's representatives.
3. Demonstration shall be performed by manufacturer's representative knowledgeable in all aspects of his equipment.
4. During the demonstration, instruct the Owner's operating personnel in the proper operation and maintenance of the equipment.
5. Furnish complete, bound, operation/maintenance manuals and certificates of warranty for all items of equipment provided, in accordance with Article 1.5 Submittals, Paragraph F, at this demonstration time.

3.5 ADJUST AND CLEAN

A. Upon completion of installation and tests, clean and sanitize foodservice equipment, and leave in condition ready for use in food service.

B. Remove all protective coverings, and thoroughly clean equipment both internally and externally with stainless steel cleaner.

C. Make and check final adjustments required for proper operation of the equipment.

D. Restore finishes marred during installation to remove abrasions, dents, and other damages. Polish stainless steel surfaces, and touch-up painted surfaces with original paint.

E. Clean up all refuse, rubbish, scrap materials, and debris caused by the work of this Section, and put the site in a neat, orderly, and broom-clean condition.

NOT FOR BIDDING PURPOSES

3.6 ITEMIZED EQUIPMENT

ITEM #1: FLY FAN

QUANTITY: One (1)
MANUFACTURER: Mars Air Doors
MODEL NO.: LPN242-1UA OB (N058)
PERTINENT DATA: 42" Long, Wall-Mounted, NSF Model, Unheated
UTILITIES REQ'D: 1/6HP, 120V, 1PH
ALTERNATE MFRS.: Berner

Furnish and install per Equipment Plan, Sheet K-101; Manufacturer's Instructions and the following:

1. Accessories:
   -- Plunger-type micro-switch.
   -- Stainless steel mounting bracket.

2. Attach to wall with expansion bolts centered over door opening.

ITEM #2: UTILITY CART, MOBILE

QUANTITY: Three (3)
MANUFACTURER: Lakeside Manufacturing Company, Inc.
MODEL NO.: 544 (N058)
PERTINENT DATA: 700-LB. Capacity, Three-Shelf, NSF Model
UTILITIES REQ'D.: ----
ALTERNATE MFRS.: None

Furnish and set-in-place per Equipment Plan, Sheet K-101; Manufacturer's Instructions and the following:

1. All four (4) casters swivel-type.

ITEM #3: WALK-IN COOLER/FREEZER

QUANTITY: One (1)
MANUFACTURER: Thermo-Kool
MODEL NO.: Indoor Installation (N058)
PERTINENT DATA: 4" Thick Durathane Construction - Class I; NSF Construction
UTILITIES REQ'D: 1750W, 120V, 1PH; (2) 1/2" IW
ALTERNATE MFRS.: Bally; Kolpak

Furnish and set-in-place per Equipment Plan, Sheet K-101; Building Conditions Plan, Sheet K-102; Manufacturer's Shop Drawing and the following:

1. Two Section Unit: 20'-2 1/2" L x 14'-5 1/2" W x 8'-6" H. Interior width: Cooler – 9'-7", Freezer - 9'-8".

2. Exterior Finish:
   -- 26 GA stucco embossed galvanized steel where unexposed.

NOT FOR BIDDING PURPOSES

ITEM #3: (Continued)

-- 20 GA stucco embossed stainless steel where exposed.

3. Interior Finish:
   -- White acrylic enamel baked-on .040 stucco embossed aluminum walls.
   -- White acrylic enamel baked on 26 GA smooth galvanized steel ceiling.

4. Interior Floor:
   -- 4" prefabricated heavy-duty structural floor panels with foamed-in 3/4" plywood reinforcing installed over hot asphalt paper or 10 MIL polyethylene sheets on building floor slab.
   -- 2" setting bed with two (2) layers of wire reinforcing mesh fabric and Altro Stronghold 30 sheet vinyl (Color: Skyline) applied over floor panels with integral 6" high perimeter coved base. Application performed by factory authorized installer.

5. Entrance Door:
   -- Two (2) flush-mounted, self-closing doors with 34" x 76" net opening, hinged per Equipment Plan.
   -- Polished chrome camlift hinges with lift-off capability. One (1) extra hinge per door, three (3) total.
   -- Kason #1236 polished chrome lever-action handle with knob-turn release and cylinder lock.
   -- Kason #09440004 polished chrome mortise dead-bolt lock, factory mounted.
   -- Hydraulic door closer.
   -- Standard 2" diameter dial indicating thermometer factory mounted in door frame. Probe wires to be secured in wall with cable holders and stainless steel fasteners at 18" on center.
   -- 36" high aluminum diamond tread kickplates, interior and exterior of door, frame and jamb.
   -- 14" x 24" heated observation windows, both compartments.
   -- Foot treadle door opener.
   -- Kason #1806 LED light fixture with high-impact plastic cover centered over door opening to avoid conflict with shelving, each compartment. Extend wiring in conduit, foamed within door panel header, to junction box mounted on top of walk-in ceiling, each compartment.
   -- Kason #907 interior door handle, factory mounted, with concealed metal backing plate.
   -- Round vinyl door bumper mounted to front exterior face to protect handle from puncturing wall when door in full open position.
   -- Engraved phenolic plastic compartment sign - 12" long x 2" high; white in color with 1" high blue CAPITAL letters mounted on each door above observation window; (1) - COOLER, (1) - FREEZER.
   -- 12-gauge heavy-duty stainless steel heated threshold, each compartment.

6. Heated pressure relief port in freezer, ceiling mounted.

7. Four (4) Kason #1810L21248LB 48" long LED light fixtures with shatter-proof high impact plastic covers centrally-mounted to walk-in ceiling per Detail, Sheet K-104; two (2) for the cooler, two (2) for the freezer. Fixtures to be shipped loose and mounted by K.E.C. Final connection by Electrical Contractor. K.E.C. to seal and insulate with silicone sealant all knock-outs in fixture casing to prevent moisture infiltration.

8. One (1) #TK4700 walk-in monitor system with #TK4 light control and panic button factory mounted in each door panel and inter-wired with building monitoring system, as required by Electrical Contractor. Provide engraved identification label mounted above each alarm.

NOT FOR BIDDING PURPOSES

ITEM #3: (Continued)

9. Provide and install trim strips of matching exterior finish between ends of walk-in panels and building walls from finish floor to 6" above finish ceiling; verify finished ceiling height.

10. Provide and install closure panels of matching exterior finish between top of walk-in and finish ceiling per Detail Sheet K-102; K.E.C. to verify finished ceiling height.

11. All electrical conduit shall be run concealed above walk-in ceiling, per Detail Sheet K-104.

12. Evaporator coil drain lines shall be run to floor drain with "P"-trap on exterior of box by Plumbing Contractor.

13. Black flexible "Armaflex" insulation applied to exposed drain lines and fittings within interior of box by Refrigeration Contractor.

14. Spiral heat tape applied to drain line within interior of freezer compartment prior to application of insulation by Electrical Contractor. Drain line heating cable shall be installed for continuous 24-hour operation.

15. Coordinate location of sprinkler head drops and provide penetrations, where necessary.

16. Seal and insulate all openings to prevent infiltration of warm air into cooler/freezer compartments.

17. Accessories:
    - -- One (1) Kolpak #HAR-C2-N1 air shield mounted vertically on the hinge side of doorjamb inside each walk-in compartment. Electrical Contractor to provide power receptacle and final connection.
    - -- #16 ga. stainless steel hat-channel bumper rail with closed ends installed to front face of walk-in, full-length, mounted @ 36" A.F.F. Provide 1/8" diamond tread kickplates from top of finish floor coved base to bottom of bumper rail. Align bumper rail with 36" high aluminum kickplate on doors.
    - -- 6" high 1/8" thick aluminum cove baseboard, to be installed where panels are exposed at kitchen side, fastened with countersink screws and seal with gray-color silicone sealant to finish floor and walk-in panels.

18. Quality Inspection Requirement:
    - -- Walk-In shall be completely erected at the manufacturer's facility prior to shipment and a quality control inspection performed on the assembled structure. A digital photograph of factory assembled walk-in shall be provided for the K.E.C. permanent records and included in the operation and maintenance manuals.

NOT FOR BIDDING PURPOSES

ITEM #4: COOLER REFRIGERATION SYSTEM

QUANTITY: One (1)
MANUFACTURER: ColdZone
MODEL NO.: CFO100M4S-E (N058)
PERTINENT DATA: Uni-Pak, Air Cooled, Outdoor Installation, , Remote, With EcoNet® Intelligent Control
UTILITIES REQ'D: 4.1A, 208V, 3PH
ALTERNATE MFRS.: RDT, OmniTemp

Furnish and install per Equipment Plan, Sheet K-101; Manufacturer's Shop Drawing and the following:

1. Condensing Unit: Factory Pre-Assembled, Scroll, Medium Temperature, R-448A.

2. System located outdoors on roof. Curb with pitch-pocket furnished and installed by General Contractor. See roof plan for exact location.

3. Complete winterization package and condensing unit weatherproof cover.

4. Overall size: 28.25" L x 28" W x 19" H.

5. Weight: 195 lbs.

6. Evaporator Coil with High-Efficiency EC Motors: Low-Profile, End-Mount Type, Model CL6A094SDARE; 1.6A, 120V, 1PH
   -- System to operate at +35°F.
   -- Furnished complete with thermostat, solenoid and expansion valves factory mounted ready for final connection by Refrigeration Contractor.
   -- EcoNet® Intelligent Control with remote monitoring and diagnostics.
   -- Furnish Cat5 cable and interwire to building monitoring system by Electrical Contractor.

7. Complete refrigeration system warrantee: five (5) years for the compressor, Two (2) years for the condensing unit, and Two (2) years for all parts of the evaporator coil.

8. Factory installed main-fused disconnect switch.

ITEM #5: FREEZER REFRIGERATION SYSTEM

QUANTITY: One (1)
MANUFACTURER: ColdZone
MODEL NO.: CFO400L4S-E (N058)
PERTINENT DATA: Uni-Pak, Air Cooled, Outdoor Installation, Remote, With EcoNet® Intelligent Control
UTILITIES REQ'D: 15.0A, 208V, 3PH
ALTERNATE MFRS.: RDT, OmniTemp

Furnish and install per Equipment Plan, Sheet K-101; Manufacturer's Shop Drawing and the following:

1. Condensing Unit: Factory Pre-Assembled, Scroll, Low Temperature, R-448A.

NOT FOR BIDDING PURPOSES

ITEM #5: (Continued)

2. System located outdoors on roof. Curb with pitch-pocket furnished and installed by General Contractor. See roof plan for exact location.

3. Complete winterization package and condensing unit weatherproof cover.

4. Overall size: 33" L x 44" W x 35" H.

5. Weight: 352 lbs.

6. Evaporator Coil with High-Efficiency EC Motors: Low-Profile, End-Mount Type, Model CL6E121DDARE, 1.5A, 208V, 1PH (Fan); 14.3A, 208V, 1PH (Defrost Heater)
   -- System to operate at -10°F.
   -- Furnished complete with thermostat, solenoid and expansion valves factory mounted ready for final connection by Refrigeration Contractor.
   -- EcoNet® Intelligent Control with remote monitoring and diagnostics.
   -- Furnish Cat5 cable and interwire to building monitoring system by Electrical Contractor.

7. Complete refrigeration system warrantee: five (5) years for the compressor, Two (2) years for the condensing unit, and Two (2) years for all parts of the evaporator coil.

8. Factory installed main-fused disconnect switch.

ITEM #6: DUNNAGE RACK, MOBILE

QUANTITY: Two (2)
MANUFACTURER: InterMetro Industries Corporation
MODEL NO.: MetroMax i (N058)
PERTINENT DATA: Open-Grid Shelf Mat, Heavy-Duty, Polymer
UTILITIES REQ'D: ----
ALTERNATE MFRS.: None

Furnish and set-in-place per Equipment Plan, Sheet K-101; Manufacturer's Instructions and the following:

<u>Cooler</u>:

1. One (1) #MHP2448G unit; 24" W x 48" L.

2. One (1) #M3TF2448E three-sided frame.

3. Four (4) #MX9UP polymer posts, 9-3/16" high.

4. Two (2) #5MPX polyurethane swivel casters with bumpers.

5. Two (2) #5MPBX polyurethane swivel casters with brakes and bumpers.

NOT FOR BIDDING PURPOSES

ITEM #6: (Continued)

Freezer:

1. One (1) #MHP2448G unit; 24" W x 48" L.

2. One (1) #M3TF2448E three-sided frame.

3. Four (4) #MX9UP polymer posts, 9-3/16" high.

4. Two (2) #5MPX polyurethane swivel casters with bumpers.

5. Two (2) #5MPBX polyurethane swivel casters with brakes and bumpers.

ITEM #7: SHELVING, MOBILE

QUANTITY: Twelve (12)
MANUFACTURER: InterMetro Industries Corporation
MODEL NO.: MetroMax i (N058)
PERTINENT DATA: Four-Tier High, Open-Grid Shelf Mat, Polymer
UTILITIES REQ'D: ----
ALTERNATE MFRS.: None

Furnish and set-in-place per Equipment Plan, Sheet K-101; Manufacturer's Instructions and the following:

Cooler:

1. One (1) #MX2442G section; 24" W x 42" L x 4-tier high.

2. Five (5) #MX2448G sections; 24" W x 48" L x 4-tier high.

3. Twenty-four (24) #MX63UP polymer posts for stem casters, 61-3/16" high.

4. Twelve (12) #5MPX polyurethane swivel casters with bumpers.

5. Twelve (12) #5MPBX polyurethane swivel casters with brakes and bumpers.

6. Plastic wedge lock connectors, quantity as required.

7. Locate bottom shelf @ 12" A.F.F.; space remaining shelves equally.

Freezer:

1. One (1) #MX2442G section; 24" W x 42" L x 4-tier high.

2. Five (5) #MX2448G sections; 24" W x 48" L x 4-tier high.

3. Twenty-four (24) #MX63UP polymer posts for stem casters, 61-3/16" high.

NOT FOR BIDDING PURPOSES

ITEM #7: (Continued)

4. Twelve (12) #5MPX polyurethane swivel casters with bumpers.

5. Twelve (12) #5MPBX polyurethane swivel casters with brakes and bumpers.

6. Plastic wedge lock connectors, quantity as required.

7. Locate bottom shelf @ 12" A.F.F.; space remaining shelves equally.

ITEM #8: HAND SINK

QUANTITY: Four (4)
MANUFACTURER: Eagle Foodservice Equipment Company
MODEL NO.: HSA-10-FAW-LRS (N058)
PERTINENT DATA: Wall Mounted, Wrist Action Faucet
UTILITIES REQ'D: 1/2" HW, 1/2" CW, 1-1/2" W
ALTERNATE MFRS.: Advance Tabco

Furnish and set-in-place per Equipment Plan, Sheet K-101; Manufacturer's Instructions and the following:

1. Complete sink assembly consisting of: gooseneck faucet, p-trap, tailpiece and basket drain.

2. Accessories: (each unit)
   -- #606215 skirt assembly.
   -- Integral right and left stainless steel splash shield.

ITEM #9: SOAP & TOWEL DISPENSER -- (N.I.K.E.C. – SPECIFIED BY ARCHITECT)

QUANTITY: Four (4)

ITEM #10: DUNNAGE RACK

QUANTITY: One (1)
MANUFACTURER: InterMetro Industries Corporation
MODEL NO.: MetroMax i (N058)
PERTINENT DATA: Open-Grid Shelf Mat, Heavy-Duty Assembly, Polymer
UTILITIES REQ'D: ----
ALTERNATE MFRS.: None

Furnish and set-in-place per Equipment Plan, Sheet K-101; Manufacturer's Instructions and the following:

Dry Storage:

1. One (1)#MHP2448G unit, 24" W x 48" L.

2. One (1)#M3TF2448E three-sided frame.

NOT FOR BIDDING PURPOSES

ITEM #10: (Continued)

3. Four (4) #MX13P polymer posts, 14-3/16" high.

ITEM #11: CAN RACK, MOBILE

QUANTITY: One (1)
MANUFACTURER: New Age Industrial Corp., Inc.
MODEL NO.: 97294CK (N058)
PERTINENT DATA: All Welded Aluminum Construction, (156) #10 Can Capacity
UTILITIES REQ'D: ----
ALTERNATE MFRS.: Win-Holt; Channel

Furnish and set-in-place per Equipment Plan, Sheet K-101 and Manufacturer's Instructions.

ITEM #12: SHELVING

QUANTITY: Seven (7)
MANUFACTURER: InterMetro Industries Corporation
MODEL NO.: MetroMaxQ (N058)
PERTINENT DATA: Five-Tier High, Free-Standing, Polymer
UTILITIES REQ'D: ----
ALTERNATE MFRS.: None

Furnish and set-in-place per Equipment Plan, Sheet K-101; Manufacturer's Instructions and the following:

Dry Storage:

1. Two (2) #MQ2442G sections; 24" W x 42" L x 5-tier high.

2. Five (5) #MQ2448G sections; 24" W x 48" L x 5-tier high.

3. Twenty-eight (28) #MQ74PE polymer posts; 74-3/16" high.

4. Plastic wedge lock connectors, quantity as required.

5. Locate bottom shelf @ 12" A.F.F.; space remaining shelves equally.

ITEM #13: PAN RACK CART, MOBILE

QUANTITY: Three (3)
MANUFACTURER: Cres-Cor
MODEL NO.: 207-UA-13A (N058)
PERTINENT DATA: Universal Angles, Channel Posts, (18) 22x20 Pan Capacity
UTILITIES REQ'D: ----
ALTERNATE MFRS.: Lakeside, InterMetro

Furnish and set-in-place per Equipment Plan, Sheet K-101; Manufacturer's Instructions and the following:

NOT FOR BIDDING PURPOSES

ITEM #13: (Continued)

1. Full perimeter non-marking wrap-around vinyl bumper.

ITEM #14: PREP SINK

QUANTITY: One (1)
MANUFACTURER: Custom Fabricated
MODEL NO: #14 GA Stainless Steel
PERTINENT DATA: 8'-6" Long x 2'-6" Wide x 2'-10" High
UTILITIES REQ'D: 1/2" HW, 1/2" CW, (2) 1-1/2" IW
ALTERNATE MFRS.: None

Fabricate and set-in-place per Equipment Plan, Sheet K-101; Fabrication Detail, Sheet K-501; and the following:

1. Front and partial right end edge rolls per Detail 1.02B.

2. 13" high back, left and partial right end splash per Detail 1.04A.

3. Framework per Detail 1.05.

4. Legs per Detail 1.07.

5. Full length stainless steel overshelf per Detail 1.12.

6. Stainless steel undershelf on both ends per Detail 1.11.

7. Sound-deaden underside of sinks and drainboards with NSF-approved sound dampening material.

8. Accessories:
   -- One (1) T&S #B-0231 backsplash-mounted swing spout faucet with #B-0199-1 aerator.
   -- Two (2) T&S #B-3950-01 twist waste valves with overflow assemblies and #010387-45 basket strainers.

9. Item will remain shrink-wrapped until ready for final connection by Plumbing Contractor. Immediately following completion of final connections, K.E.C. shall re-shrink-wrap tubs or provide removable panel to avoid use by construction trades. Post sign on wall above sink tubs in English and Spanish stating: WARNING! NOT TO BE USED BY CONSTRUCTION TRADES. FAILURE TO COMPLY WILL RESULT IN $500.00 FINE AND ALL COSTS TO REPLACE ITEM WITH NEW.

NOT FOR BIDDING PURPOSES

ITEM #15: UTILITY RACEWAY

QUANTITY: One (1)
MANUFACTURER: Captive-Aire
MODEL NO.: UDI (N058)
PERTINENT DATA: Island Type
UTILITIES REQ'D: 50.0A, 120/208V, 3PH; 50.0A, 480V, 3PH, 3/4"HW, 1"CW; 1-1/4" Natural Gas @ 960MBH (Looped Service)
ALTERNATE MFRS.: Avtec; Gaylord

Furnish and install per Equipment Plan, Sheet K-101; Raceway Detail Drawing, Sheet K-502; Manufacturer's Shop Drawing and the following:

1. All components and labor necessary for a complete system manufactured in accordance with NEC latest edition, NEMA, NFPA No. 54, Uniform Plumbing Code, ASME, OSHA using only U.L. Listed certified components.

2. 15'-0" long x 1'-0" wide x 6'-8" high with risers, completely pre-wired and pre-plumbed to one (1) final connection point for electric, hot water, cold water and gas.

3. System shall extend up to bottom edge of Ventilator, Item #16. All connections shall face down on horizontal member.

4. 54" W. x 6'-8" H. risers on each end with 2" penetration into ventilator at 6'-8" A.F.F.

5. 5'-2" overall height less risers with peaked top.

6. Riser, top, endcaps and raceway exterior panels shall be constructed of No. 16 gauge No. 304 stainless steel with a No. 4 mill finish. Removable panels shall be constructed of No. 18 gauge stainless steel.

7. Removable link plates constructed of No. 16 gauge stainless steel.

8. Electrical compartment shall be completely enclosed with stainless steel housing accessible by the removal of link plates. Internal electrical feeder shall be conductor cable wireway having balanced load and phases and with connection lugs for main service. Branch circuit wiring for each electrical connection shall be phase identified and sized in accordance with circuit breaker rated capacity. Raceway shall provide electrical, water and gas service for items #18, #20, #21, #24 and #26.

9. Provide 12" long interchangeable 16 gauge stainless steel link connection plate for each electrical connection equipped with individual circuit breaker(s) installed in breaker panel mounted in left-hand riser, and grounding type receptacle with twist-lock feature or pre-wired flexible sealtite conduit.

10. On each connection plate provide U.L. listed GFIC ground fault interrupter circuits and matching power supply cords on each 120-volt single phase connection.

11. Hot water and cold water plumbing compartment shall be isolated from electrical compartment. All piping and disconnects in system shall be color coded.

NOT FOR BIDDING PURPOSES

ITEM #15: (Continued)

12. All hot and cold water piping, including individual branch pipe connection, shall be hard temper type "L" copper tubing with copper sweat type solder fittings. At each individual connection, provide A.G.A approved flexible hose(s) with two-wall brass and stainless steel construction with quick-disconnect fittings.

13. At each individual gas branch connection, provide 1/4-turn ball valve and 48" long Dormont PVC coated AGA and NSF approved flexible hose with SnapFast quick-disconnect device and double SwivelMAX gas connectors.

14. Provide each mobile piece of equipment with an A.G.A. recognized restraining device protecting respective gas disconnect assemblies and connectors.

15. Provide fire/fuel shut-off for electric and gas equipment per NFPA No. 96. System shall require one final connection by Electrical Contractor from fire protection system. Provide manual gas reset station with audio and visual alarms.

16. Electronic gas solenoid valve factory installed at each in-coming gas service ready for final connection per local codes by Plumbing Contractor; inter-wired by Electrical Contractor.

17. Provide matching cord sets for all electric equipment, six (6) total.

18. Neoprene bumper strips, full-length.

19. System fabricated in four (4) sections, assembled in field to present integral, one-piece, appearance.

20. Provide shunt-type circuit breaker main electrical disconnect mounted in right-hand riser for 50A, 120/208V, 3PH and 50A, 480V, 3PH services.

21. Factory System Design Verification (SDV) shall be performed after all inspections are complete. SDV report shall be available once completed.

22. Raceway shall be of same manufacturer as Ventilator, Item #16.

23. U.L. listed, solid-state control panel mounted in right-hand riser end, with the following integral accessories:
    -- Ventilator start/stop station with adjustable time-delay to exhaust residual heat.
    -- Ventilator light switch, pre-wired in 10ft. flexible conduit ready for connection to light

24. Accessories;
    -- Two (2) #QTI1+CR Optipure Water Treatment Systems, dual-cartridge, factory-installed and housed within riser. Provide independent pre-piped water lines to service points for Item #21: Combi-Oven. Provide 14" x 18" clear Lexan viewport in front riser panel to monitor pressure gauge and filter bowl.
    -- Watts #LF7R dual check valve for each water drop.
    -- Three (3) duplex receptacles mounted on UDS peak top to service Items #24, #26 and #29.

NOT FOR BIDDING PURPOSES

ITEM #16: VENTILATOR

QUANTITY:	One (1)
MANUFACTURER:	Captive-Aire
MODEL NO.:	6630-ND2-PSP-F (N058)
PERTINENT DATA:	Island Configuration, Captrate Solo Filter Type, Perforated Ceiling Make-Up Air Plenum, With Demand Control Ventilation (DCV) System & Fire Protection System
UTILITIES REQ'D:	3,360 CFM Exhaust/2,688 CFM Supply; 800W, 120V, 1PH (Lights); 20A, 120V, 1PH, 24-Hour Dedicated Service (Fire Protection System)
ALTERNATE MFRS.:	Avtec, Gaylord

Furnish and install per Equipment Plan, Sheet K-101; Ventilator Detail Drawing, Sheet K-503; Manufacturer's Shop Drawing and the following:

1. 5'-6" Wide x 14'-0" Long x 2'-6" High, with bottom edge mounted at 6'-8" A.F.F. Length comprised of one (1) 7'-0" long section on the left side and (1) 7'-0" long section on the right side. Entire unit constructed of 18 GA - 304 stainless steel #4 mill finish with liquid tight all welded external continuous seams and joints per N.F.P.A. 96, U.L. and State of Delaware Codes.

2. Four (4) U.L. Listed, NSF-Approved, 12" x 12" recessed LED light fixtures, two (2) on the left side and two (2) on the right side, equally spaced each section. Bulbs furnished and installed by K.E.C.

3. Matching stainless steel perimeter closure panels to finished ceiling; K.E.C. to verify ceiling height.

4. Surface fire protection system nozzles and piping to be factory installed, chrome plated or stainless steel where exposed, ready for final connections by fire protection system sub-contractor.

5. Hanger rods and support system from structure above by Contractor. K.E.C. to coordinate method and location with other trades.

6. Stainless steel hanger brackets.

7. 12" wide stainless steel angle framing and closure panels to accommodate Utility Raceway, Item #15.

8. 14'-0" long rear-mounted and full-length, front-mounted completely insulated, perforated stainless steel ceiling-mounted make-up air plenum with integral supply air balancing dampers.

9. Stainless steel U.L. Classified 20" captrate solo grease filters with hook.

10. Semi-concealed stainless steel grease trough sloped to removable grease cups.

11. HVAC Contractor to provide tempered supply air during winter months: 60º F - 65º F.

12. Factory System Design Verification (SDV) shall be performed after all inspections are complete. SDV report shall be available once completed.

13. Ventilator shall be of same manufacturer as Utility Raceway, Item #15.

NOT FOR BIDDING PURPOSES

ITEM #16: (Continued)

14. Accessories:
    - -- 12" wide utility cabinet mounted on right end with factory pre-piped Ansul R-102 fire suppression system and electrical pre-wire package #SC-011110FP with light and fan switches.
    - -- One (1) Ansul Model K01-2 hand-held fire extinguisher, 1.6 gallon, wall-mounted.
    - -- Six-month and twelve-month inspections, servicing, and replacement of components as per NFPA-96 Latest Edition.
    - -- Field wrapper.

ITEM #17: SPARE NUMBER

ITEM #18: TILTING KETTLE, 20-GALLON

QUANTITY: One (1)
MANUFACTURER: Crown
MODEL NO.: GLT-20 (N058)
PERTINENT DATA: Floor Mounted, Self-Contained, 2/3-Jacketed
UTILITIES REQ'D: 23.4KW, 120V, 1PH; 3/8" HW, 3/8" CW, 2" IW, ¾" Natural Gas @ 80MBH
ALTERNATE MFR.: Cleveland

Furnish and set-in-place per Equipment Plan, Sheet K-101; Manufacturer's Instructions and the following:

1. Accessories:
    - -- One (1) 2" tangent draw-off valve with strainer.
    - -- One (1) kettle brush utensil kit.
    - -- One (1) pan support.
    - -- One (1) food strainer.
    - -- One (1) spring assist hinged cover.
    - -- One (1) contour measuring strip.
    - -- One (1) double pantry faucet with swing spout and bracket.
    - -- One (1) permanent etched interior markings.
    - -- One (1) Type 316 stainless steel liner.

2. Electrical and mechanical services supplied through Utility Raceway, Item #15.

ITEM #19: FLOOR TROUGH

QUANTITY: One (1)
MANUFACTURER: IMC Teddy Foodservice Corporation
MODEL NO.: ASFT1824-SQAS (N058)
PERTINENT DATA: Anti-Spill, 14 GA S/S, Serrated Top, Anti-Slip Grating
UTILITIES REQ'D: 4" W
ALTERNATE MFRS.: Eagle Group

NOT FOR BIDDING PURPOSES

ITEM #19: (Continued)

Furnish and install per Equipment Plan, Sheet K-101; Manufacturer's Instructions and the following:

1. 2'-0" long x 1'-6" wide, constructed and installed per Detail, Sheet K-102.

2. SQAS-18 anti-slip serrated stainless steel subway style removable floor grate in equal sections, the lessor of 30 lbs. and/or 20" long.

3. Bottom of trough pitched to integral stainless steel waste cup with removable perforated stainless steel basket.

4. Top of trough installed flush with top of kitchen finished floor.

5. Unit furnished by K.E.C.; installed by Plumbing Contractor.

ITEM #20: RANGE OVEN, MOBILE

QUANTITY: One (1)
MANUFACTURER: Garland/U.S. Range
MODEL NO.: MST4S-E (N058)
PERTINENT DATA: Heavy-Duty Gas Range with Storage Base, (2) Open Burners, Master Series, Electronic Ignition, Flame Failure Protection
UTILITIES REQ'D: 0.1A, 120V, 1PH; 3/4" Natural Gas @ 70MBH
ALTERNATE MFRS.: Southbend

Furnish and set-in-place per Equipment Plan, Sheet K-101; Manufacturer's Instructions and the following:

1. Accessories:
   -- Four (4) heavy-duty 5" diameter polyurethane swivel casters, front two (2) with brakes.
   -- Stainless steel front, back and both sides.
   -- ¾" rear gas connection. Cap and cover manifold ends.
   -- 17" wide Model #M17LPBG, 10" low-profile backguard.
   -- Pressure regulator.

2. Mechanical and electrical services supplied through Utility Raceway, Item #15.

ITEM #21: COMBI OVEN, MOBILE

QUANTITY: Two (2)
MANUFACTURER: Rational Cooking Systems, Inc.
MODEL NO.: SCC WE 62NG/SCC WE 102 E (N058)
PERTINENT DATA: Combi-Duo, Full Size, Self-Contained, SelfCooking Center® with Care Control
UTILITIES REQ'D: 3.7A, 208V, 1PH; 37.0KW, 480V, 3PH; 3/4" CW, 2" IW; 3/4" Natural Gas @ 106 MBH
ALTERNATE MFR.: None

Furnish and set-in-place per Equipment Plan, Sheet K-101; Manufacturer's Instructions and the following:

NOT FOR BIDDING PURPOSES

ITEM #21: (Continued)

1. 3-year warranty.

2. Accessories: (each unit)
   --- Rational Certified Installation (RCI).
   -- Installation kit.
   -- Chef Assistance Program.
   -- One (1) #60.71.933 Combi-Duo stacking kit, mobile.
   -- Twenty (20) #6019.1150 stainless steel 12" x 20" fry baskets.
   -- Ten (10) #6010.2101 stainless steel 24" x 20" wire racks.
   -- One (1) bucket #56.00.210 cleaner tablets.
   -- One (1) bucket #56.00.562 care tablets.
   -- Dormont Safety-Set equipment placement system.
   -- One (1) #QTI1+CR Optipure Water Treatment System, dual-cartridge. Ship to Utility Raceway manufacturer for factory installation.

3. Electrical and mechanical services provided thru Utility Raceway, Item #15.

ITEM #22: MIXER, 20-QUART

QUANTITY: One (1)
MANUFACTURER: Hobart Corporation
MODEL NO.: HL200-1STD (N058)
PERTINENT DATA: Bench Model, Standard Finish with Timer, Legacy Series
UTILITIES REQ'D: 1/2 HP, 120V, 1PH
ALTERNATE MFRS.: None

Furnish and set-in-place per Equipment Plan, Sheet K-101; Manufacturer's Instructions and the following:

1. Pre-configured 120V/1PH mixer with standard accessory package consisting of: 20-qt. stainless steel bowl, 20-qt. aluminum "B" beater and 20-qt. stainless steel "D" wire whip.

2. Accessories:
   -- One (1) #EDDOUGH-ALU20H "ED" Dough Hook.
   -- One (1) #SPLASH-LEX020 lexan splash cover.
   -- One (1) Piper Products #MX-29-TSS stainless steel mixer stand with heavy-duty swivel casters with polyurethane tires.

3. Cord and plug set.

ITEM #23: SPARE NUMBER

NOT FOR BIDDING PURPOSES

ITEM #24: SLICER

QUANTITY: One (1)
MANUFACTURER: Hobart Corporation
MODEL NO.: HS7N-1 (N058)
PERTINENT DATA: Automatic, Variable 4-Speed Carriage Drive, 13" Knife
UTILITIES REQ'D: 1/2 HP, 120V, 1PH
ALTERNATE MFRS.: Bizerba; Globe

Furnish and set-in-place per Equipment Plan, Sheet K-101; Manufacturer's Instructions and the following:

1. Accessories:
   -- One (1) #HS-FENFUL product fence.
   -- One (1) #HS-CHUTE food chute.
   -- One (1) #HS-AUTOLEGSET 4½" leg set.

2. Cord and plug set.

ITEM #25: WORKTABLE

QUANTITY: One (1)
MANUFACTURER: Custom Fabricated
MODEL NO.: #14 GA Stainless Steel
PERTINENT DATA: 8'-0" Long x 2'-6" Wide x 3'-0" High
UTILITIES REQ'D: 1/2" HW, 1/2" CW, 1-1/2" IW
ALTERNATE MFRS.: None

Fabricate and set-in-place per Equipment Plan, Sheet K-101; Fabrication Detail, Sheet K-501 and the following:

1. Front and end edge roll per Detail 1.02M.

2. 6" high back splash per Detail 1.04A.

3. Framework per Detail 1.05.

4. Legs per Detail 1.07.

5. Stainless steel undershelf per Detail 1.11.

6. Two (2) stainless steel drawer assemblies per Detail 1.14, Type I, with locks.

7. Worktable per Detail 2.01.

8. Sound-deaden underside of tabletop with NSF-approved sound dampening material.

NOT FOR BIDDING PURPOSES

ITEM #26: FOOD PROCESSOR

QUANTITY: One (1)
MANUFACTURER: Robot Coupe USA, Inc.
MODEL NO.: R-602VV (N058)
PERTINENT DATA: Continuous Feed Hopper, Dual Purpose, Variable Speed, 7-Qt. Bowl
UTILITIES REQ'D: 20.0A, 120V, 1PH
ALTERNATE MFRS.: None

Furnish and set-in-place per Equipment Plan, Sheet K-101; Manufacturer's Instructions and the following:

1. Standard food processor package consisting of: food processor, 7-qt. stainless steel bowl, continuous feed vegetable preparation attachment, (1) #28058 1/8" grating disc and (1) #28064 1/8" slicing disc.

2. Accessories:
   -- One (1) #R255 disc rack.
   -- One (1) #R199 Robo-Cart equipment stand.

3. Cord and plug

ITEM #27: ICE MACHINE/BIN

QUANTITY: One (1)
MANUFACTURER: Manitowoc Equipment Works
MODEL NO.: IDT-0450A/D-570 (N058)
PERTINENT DATA: Air-Cooled, 470-LB. Maker, 532-LB. Bin, Dice Cube Size
UTILITIES REQ'D: 11.9A, 120V, 1PH; 3/8" CW, 1/2" IW (Maker Drain), 3/4" IW (Bin Drain)
ALTERNATE MFRS.: Scotsman; Ice-O-Matic

Furnish and set-in-place per Equipment Plan, Sheet K-101; Manufacturer's Instructions and the following:

1. Stainless steel exterior finish, ice machine and bin.

2. Accessories:
   -- One (1) Optipure #QTI10-1 QT water filter system with primary and coarse filter mounted on manufacturer’s wall bracket.
   -- 6" high stainless steel leg set with adjustable bullet feet.
   -- One (1) #K00463 ice scoop with #K00461 external scoop holder mounted to right side of bin.

3. Backflow preventor installed on incoming water line by Plumbing Contractor.

4. Cord and plug with matching receptacle furnished and installed by Electrical Contractor.

NOT FOR BIDDING PURPOSES

ITEM #28: ELECTRIC WEIGHING SCALE

QUANTITY: One (1)
MANUFACTURER: Edlund Company, Inc.
MODEL NO.: EDL-10 OP (N058)
PERTINENT DATA: Countertop, Stainless Steel Construction
UTILITIES REQ'D: ----
ALTERNATE MFRS.: None

Furnish and set-in-place per Equipment Plan, Sheet K-101 and Manufacturer's Instructions.

ITEM #29: ELECTRIC CAN OPENER

QUANTITY: One (1)
MANUFACTURER: Edlund Company, Inc.
MODEL NO.: 270B (N058)
PERTINENT DATA: Countertop, Dual-Speed, 200 Cans/Day Capacity
UTILITIES REQ'D: 1.5A, 120V, 1PH
ALTERNATE MFRS.: None

Furnish and set-in-place per Equipment Plan, Sheet K-101, Manufacturer's Instructions and the following:

1. Cord and plug set.

ITEM #30: FRUIT SECTIONIZER

QUANTITY: One (1)
MANUFACTURER: Sunkist
MODEL NO.: S-105
PERTINENT DATA: 3-in-1, 2 HALVES scored in 3 wedges ea., NSF Listed
UTILITIES REQ'D: ----
ALTERNATE MFRS.: None

Furnish and set-in-place per Equipment Plan, Sheet K-101; Manufacturer's Instructions and the following:

1. Accessories:
   -- 6 slice Blade cup, w/cover, fits S-10 (S-4B)
   -- Plunger slicer, fits part S-04, 6 wedge blade cup (S-10)
   -- 8 wedge blade cup (S-29B)
   -- Apple Plunger, fits S-32 (S-33, S-32)
   -- Apple corer cup, fits S-33 (S-32B)
   -- Plastic production stand (S-31)

NOT FOR BIDDING PURPOSES

ITEM #31: WORKTABLE

QUANTITY: One (1)
MANUFACTURER: Custom Fabricated
MODEL NO.: #14 GA Stainless Steel
PERTINENT DATA: 8'-6" ± Long x 2'-6" Wide x 3'-0" High
UTILITIES REQ'D: ----
ALTERNATE MFRS.: None

Fabricate and set-in-place per Equipment Plan, Sheet K-101; Fabrication Detail, Sheet K-501 and the following:

1. Front and end edge roll per Detail 1.02M.

2. 6" high backsplash per Detail 1.04A.

3. Framework per Detail 1.05.

4. Legs per Detail 1.07.

5. Full-length stainless steel undershelf per Detail 1.11.

6. Two (2) stainless steel drawer assemblies per Detail 1.14, Type I, with locks.

7. Worktable per Detail 2.01.

8. Sound-deaden underside of worktable with NSF-approved sound dampening material.

ITEM #32: BLAST CHILLER/ SHOCK FREEZER

QUANTITY: One (1)
MANUFACTURER: Victory
MODEL NO.: VBCF-8-70U (N058)
PERTINENT DATA: One-Section, Reach-In, Self-Contained, Stainless Steel Interior/Exterior, (8)-Half-Size Sheet Pans or (4)-Full Size Sheet Pans Capacity
UTILITIES REQ'D: 10.1A, 208V, 1PH
ALTERNATE MFRS.: Delfield, ThermoKool, American Panel

Furnish and set-in-place per Equipment Plan, Sheet K-101; Manufacturer's Instructions and the following:

1. Accessories:
   -- Door hinged left.

2. Cord and plug set with matching receptacle furnished and installed by Electrical Contractor.

NOT FOR BIDDING PURPOSES

ITEM #33: HAND SINK

QUANTITY: One (1)
MANUFACTURER: Eagle Foodservice Equipment Co., Inc.
MODEL NO.: HSAP-14-ADA-FE-B (N058)
PERTINENT DATA: Wall-Mounted Special Purpose - Hands Free ADA Type
UTILITIES REQ'D: 1/2" HW, 1/2" CW, 1-1/2" W
ALTERNATE MFRS.: None

Furnish and set-in-place per Equipment Plan, Sheet K-101; Manufacturer's Instructions and the following:

1. Physically challenged unit furnished complete with splash mounted battery-powered electronic-eye faucet with low battery indicator light, basket drain, front loading C-fold paper towel dispenser, deck-mounted soap dispenser, stainless steel skirt and stainless steel wall brackets.

2. Accessories:
   -- Left and right end splashes.
   -- One (1) #326015 temperature adjustment valve.
   -- One (1) #326696 anti-scald valve.

ITEM #34: WORKTABLE

QUANTITY: One (1)
MANUFACTURER: Custom Fabricated
MODEL NO.: #14 GA Stainless Steel
PERTINENT DATA: 9'-0" Long x 2'-6" Wide x 3'-0" High
UTILITIES REQ'D: ----
ALTERNATE MFRS.: None

Fabricate and set-in-place per Equipment Plan, Sheet K-101; Fabrication Detail, Sheet K-501; and the following:

1. Perimeter edge rolls per Detail 1.02.1M.

2. Framework per Detail 1.05.

3. Legs per Detail 1.07.

4. Stainless steel undershelf per Detail 1.11.

5. Two (2) stainless steel drawer assemblies per Detail 1.14, Type I with locks.

6. Worktable per Detail 2.01.

7. Sound-deaden underside of tabletop with NSF-approved sound dampening material.

NOT FOR BIDDING PURPOSES

ITEM #35: WORKTABLE WITH SINK

QUANTITY: One (1)
MANUFACTURER: Custom Fabricated
MODEL NO.: #14 GA Stainless Steel
PERTINENT DATA: 8'-6"± Long x 2'-6" Wide x 3'-0" High
UTILITIES REQ'D: 1/2" HW, 1/2" CW, 1-1/2" IW
ALTERNATE MFRS.: None

Fabricate and set-in-place per Equipment Plan, Sheet K-101; Fabrication Detail, Sheet K-501, and the following:

1. Perimeter edge rolls per Detail 1.02M.

2. Framework per Detail 1.05.

3. Legs per Detail 1.07. Flanged feet on each corner leg.

4. Stainless steel undershelf per Detail 1.11.

5. Two (2) stainless steel drawer assemblies per Detail 1.14, Type I with locks.

6. Full-length table-mounted, double-sided utensil rack per Detail 1.18B.

7. Worktable per Detail 2.01.

8. 15" x 18 " x 8" deep utility sink per Detail 3.04 with stainless steel waste lever angle bracket fully welded to underside of sink.

9. Sound-deaden underside of tabletop and sink with NSF-approved sound dampening material.

10. Accessories:
    -- One (1) T&S #B-325 deck-mounted swing-spout gooseneck faucet with #B-199-2 aerator.

ITEM #36: PASS-THRU WARMING CABINET, MOBILE

QUANTITY: Three (3)
MANUFACTURER: Traulsen & Company, Inc.
MODEL NO.: RHF132 WP-HHS/HHG (N058)
PERTINENT DATA: One-Section, Self-Contained, Stainless Steel Exterior/Interior, Spec Line Series, Standard Depth
UTILITIES REQ'D: 7.8A, 120/208V, 1PH
ALTERNATE MFRS.: Victory, True

Furnish and set-in-place per Equipment Plan, Sheet K-101; Manufacturer's Instructions and the following:

1. Half-height doors hinged per Equipment Plan. Glass doors on kitchen side, solid doors on serving side.

2. Cylinder locks, keyed-alike.

NOT FOR BIDDING PURPOSES

ITEM #36: (Continued)

3. #16 gauge stainless steel, universal angle type, bottom support tray slides in lieu of wire shelves installed on 5" centers, five (5) pair per compartment, ten (10) total, per unit.

4. Exterior mounted digital thermometer installed on kitchen side.

5. Plastic laminate finish with stainless trim factory applied to exterior door fronts on serving side only; color as selected by Architect; K.E.C. to verify.

6. 5" diameter heavy-duty swivel casters, two (2) with brakes.

7. Cord and plug set with matching receptacle furnished and installed by Electrical Contractor.

ITEM #37: PASS-THRU REFRIGERATOR, MOBILE

QUANTITY:	Three (3)
MANUFACTURER:	Traulsen & Company, Inc.
MODEL NO.:	RHT232NPUT-HHS/HHG (N058)
PERTINENT DATA:	Two-Section, Self-Contained, Stainless Steel Exterior/Interior, Spec Line Series, Standard Depth
UTILITIES REQ'D:	8.6A, 120V, 1PH
ALTERNATE MFRS.:	Victory, True

Furnish and set-in-place per Equipment Plan, Sheet K-101; Manufacturer's Instructions and the following:

1. Half-height doors hinged per Equipment Plan. Glass doors on kitchen side, solid doors on serving side.

2. Cylinder locks, keyed-alike.

3. No. 1 - #16 gauge stainless steel, angle type, bottom support tray slides for 18"x26" pans installed on 3" centers, nine (9) pair per compartment, eighteen (18) each unit, thirty six (36) total.

4. Exterior mounted digital thermometer installed on kitchen side.

5. Plastic laminate finish with stainless trim factory applied to exterior door fronts on serving side only; color as selected by Architect; K.E.C. to verify.

6. 5" diameter heavy-duty swivel casters, two (2) with brakes.

7. Cord and plug set.

NOT FOR BIDDING PURPOSES

ITEM #38: TRAY CADDY, MOBILE

QUANTITY: Three (3)
MANUFACTURER: Caddy Corporation of America
MODEL NO.: T-40 (N058)
PERTINENT DATA: Stainless Steel Construction, 21½" x 26½" Platform, With Handle & Bumpers
UTILITIES REQ'D: ----
ALTERNATE MFRS.: None

Furnish and set-in-place per Equipment Plan, Sheet K-101 and Manufacturer's Instructions.

ITEM #39: MILK COOLER, MOBILE

QUANTITY: One (1)
MANUFACTURER: Continental
MODEL NO.: MC3-SS-D/OOLP (N058)
PERTINENT DATA: 34" Wide, Dual Access, Forced-Air, 8-Crate Capacity
UTILITIES REQ'D: 1/4HP, 120V, 1PH
ALTERNATE MFRS.: True

Furnish and set-in-place per Equipment Plan, Sheet K-101; Manufacturer's Instructions and the following:

1. Stainless steel exterior and interior.

2. Cord and plug set.

3. Cylinder lid lock.

4. Swivel casters with brakes.

5. Accessories:
   -- #5-223 corner bumpers.
   -- Foot pedal floor lock.
   -- Digital thermometer.
   -- Laminate finish to match Serving Counter.
   -- Modified low profile evaporator center down duct.

ITEM #40: SERVING COUNTER

QUANTITY: Two (2)
MANUFACTURER: Shelleysteel by The Delfield Company
MODEL NO.: Modular Stainless Steel Interlocking Sections
PERTINENT DATA: #14 Gauge Stainless Steel Tops
UTILITIES REQ'D: ----
ALTERNATE MFRS.: ColorPoint by Low-Temp Industries; Piper Products

Refer to individual counter components listed under alpha headings for specification.

NOT FOR BIDDING PURPOSES

ITEM #40A: HOT FOOD COUNTER

QUANTITY: Three (3)
MANUFACTURER: Shelleysteel by The Delfield Company
MODEL NO.: SH-5-NU (N058)
PERTINENT DATA: Electrically Heated, Open Base, Five (5) Wells, With Drains
UTILITIES REQ'D: 40.0A, 120/208V, 1PH; 1/2" HW, 3/4" IW
ALTERNATE MFRS.: ColorPoint by Low-Temp Industries; Piper Products

Furnish and set-in-place per Equipment Plan, Sheet K-101; Manufacturer's Shop Drawing and the following:

1. (B) - 10" wide full-length solid stainless steel tray slide mounted on rigid brackets @ 29" A.F.F.

2. (E) – 6" wide, full-length solid stainless steel fold-down work shelf on server's side.

3. FlexiShield® #DCFSFS full-length food shields with stainless steel finish uprights, radiant heat lamp and LED light with shatterproof shield.

4. (F) - Line-up interlocks for counter body and tray slide.

5. Cord and plug set. Double cord hooks on bottom of unit.

6. (V) – 6" high stainless steel legs with adjustable bullet feet. Stainless steel skirting on front.

7. (P) - Open understorage with bottomand intermediate stainless steel shelf.

8. (QQ) - Food wells with individual drains and quarter-turn ball valves manifolded to common valve assembly with master shut-off valve housed within counter base located on end with hinged stainless steel access door per Detail, Sheet K-103.

9. Standard counter height of 36" A.F.F. Turn end down to align and interlock with adjacent solid top counter.

10. Provide drain line less shut-off valve. Plumber to extend copper drain line to nearest floor sink.

11. Front panels and exposed end with decorative accent; design and color as selected by Architect, K.E.C. to verify.

12. Accessories:
    -- One (1) T&S #B-0208 deck-mounted single pantry fill faucet with swivel nozzle mounted on end opposite solid top counter, each unit.
    -- Vollrath Company stainless steel pans and lids in the following configurations:
    -- Five (5) #77200, 12x20 solid dome covers.
    -- Five (5) #77250, 12x20 flat lids.
    -- Fifteen (15) #30245, 12x10x 4" deep pans.
    -- Twenty-five (25) #75025, 12x10 tight fitting lids.
    -- Four (4) #90043 full-size, 4" deep perforated pans.
    -- Two (2) #90023 full-size, 2" deep perforated pans.
    -- Six (6) #3024-5 half-size, 4" deep pans.
    -- Eight (8) #75120 half-size pan lids.

NOT FOR BIDDING PURPOSES

ITEM #40A: (Continued)

-- Three (3) #3034-2 third-size, 4" deep pans.
-- Three (3) #75130 third-size lids.
-- Four (4) #3022-5 full-size, 2.5" deep pans.
-- Two (2) #30243 half-size, 4" deep perforated pans.

ITEM #40B: SOLID TOP COUNTER

QUANTITY: Three (3)
MANUFACTURER: Shelleysteel by The Delfield Company
MODEL NO.: SC-60-NU-MOD (N058)
PERTINENT DATA: Open Base, 66" Long
UTILITIES REQ'D: ----
ALTERNATE MFRS.: ColorPoint by Low-Temp Industries; Piper Products

Furnish and set-in-place per Equipment Plan, Sheet K-101; Manufacturer's Shop Drawing and the following:

1. (B) - 10" wide full-length solid stainless steel tray slide with mitered end mounted on rigid brackets@ 29" A.F.F.

2. (F) - Line-up interlocks for counter body and tray slide.

3. Provide cut-out in top for Item #43: Air-Screen Merchandiser compressor assembly. Counter base shall have isolated compressor housing with louvered stainless steel removable access panels and remote on/off switches for air-screen merchandiser lights and compressor, operator's side.

4. (V) - 6" high stainless steel legs with adjustable bullet feet. Stainless steel skirting on front.

5. (P) - Open understorage with bottom stainless steel shelf.

6. Modified counter height set @ 30" A.F.F.

7. Front panels with decorative accent; design and color as selected by Architect, K.E.C. to verify.

8. Provide an opening adjacent to Item #40A: Hot Food Counter, for clear passage of 12” x 20” tray.

ITEM #40C: SOLID TOP COUNTER

QUANTITY: Two (2)
MANUFACTURER: Shelleysteel by The Delfield Company
MODEL NO.: SC-30-NU-MOD (N058)
PERTINENT DATA: Open Base, 30" Long
UTILITIES REQ'D: ----
ALTERNATE MFR.: ColorPoint by Low-Temp Industries; Piper Products

Furnish and set-in-place per Equipment Plan, Sheet K-101; Manufacturer's Shop Drawing and the following:

NOT FOR BIDDING PURPOSES

ITEM #40C: (Continued)

1. (F) - Line-up interlocks for counter body and tray slide.

2. (V) – 6" high stainless steel legs with adjustable bullet feet.

3. Cord and plug set. Double cord hooks on bottom of unit.

4. Open understorage with bottom and intermediate stainless steel shelf.

5. Modified counter height set @ 30" A.F.F.

6. Front panels with decorative accent; design and color as selected by Architect, K.E.C. to verify.

ITEM #40D: SOLID TOP COUNTER

QUANTITY: One (1)
MANUFACTURER: Shelleysteel by The Delfield Company
MODEL NO.: SC-36-NU-MOD (N058)
PERTINENT DATA: Open Base, 36" Long
UTILITIES REQ'D: ----
ALTERNATE MFR.: ColorPoint by Low-Temp Industries, Piper Products

Furnish and set-in-place per Equipment Plan, Sheet K-101; Manufacturer's Shop Drawing and the following:

1. (B) - 10" wide full-length solid stainless steel tray slide with mitered end mounted on rigid brackets, at 29" A.F.F.

2. (F) - Line-up interlocks for counter body and tray slide.

3. (V) – 6" high stainless steel legs with adjustable bullet feet.

4. Cord and plug set. Double cord hooks on bottom of unit.

5. Open understorage with bottom and intermediate stainless steel shelf.

6. Modified counter height set @ 30" A.F.F.

7. Provide cut-out in top for Item #42: Ice Cream Merchandiser. Counter base shall have isolated compressor housing with louvered stainless steel removable access panel and remote on/off compressor switch, operator's side.

8. Front panels with decorative accent; design and color as selected by Architect, K.E.C. to verify.

NOT FOR BIDDING PURPOSES

ITEM #40E: CASHIER STAND

QUANTITY: One (1)
MANUFACTURER: Shelleysteel by The Delfield Company
MODEL NO.: SCS-30-NU-MOD (N058)
PERTINENT DATA: 30" Long
UTILITIES REQ'D: 15A, 120V, 1PH (Dedicated Circuit)
ALTERNATE MFR.: ColorPoint by Low-Temp Industries; Piper Products

Furnish and set-in-place per Equipment Plan, Sheet K-101; Manufacturer's Shop Drawing and the following:

1. (B) - 10" wide full-length solid stainless steel tray slide mounted on rigid brackets at 29" A.F.F.

2. (F) - Line-up interlocks for counter body and tray slide.

3. (V) – 6" high stainless steel legs with adjustable bullet feet. Stainless steel skirting on front and exposed sides.

4. (Q) –15-amp convenience outlet mounted below top in counter body. Provide die-raised opening in top for power cord access.

5. Cashier's utility drawer with locking provision mounted on end.

6. Cord and plug set. Double cord hooks on bottom of unit.

7. Standard counter working height of 36" A.F.F. Turn top down to align & interlock with adjacent solid top counter.

8. Front panels with decorative accent; design and color as selected by Architect, K.E.C. to verify.

ITEM #40F: CASHIER STAND

QUANTITY: Two (2)
MANUFACTURER: Shelleysteel by The Delfield Company
MODEL NO.: SCS-50-NU-MOD (N058)
PERTINENT DATA: Open Base, 50" Long
UTILITIES REQ'D: 15A, 120V, 1PH (Dedicated Circuit)
ALTERNATE MFR.: ColorPoint by Low-Temp Industries; Piper Products

Furnish and set-in-place per Equipment Plan, Sheet K-101; Manufacturer's Shop Drawing and the following:

1. (B) - 10" wide full-length solid stainless steel tray slide with mitered end mounted on rigid brackets, at 29" A.F.F.

2. (F) - Line-up interlocks for counter body and tray slide.

3. (V) – 6" high stainless steel legs with adjustable bullet feet. Stainless steel skirting on front and exposed sides.

NOT FOR BIDDING PURPOSES

ITEM #40F: (Continued)

4. (Q) – 15-amp convenience outlet mounted below top in counter body. Provide die-raised opening in top for power cord access.

5. Cashier's utility drawer with locking provision mounted on end.

6. Modified counter height set @ 30" A.F.F.

7. Cord and plug set. Double cord hooks on bottom of unit.

8. Provide cut-out in top for Item #42: Ice Cream Merchandiser. Counter base shall have isolated compressor housing with louvered stainless steel removable access panel and remote on/off compressor switch, operator's side.

9 Provide 6" high stainless steel platform sized to fit Cash Register.

10. Front panels with decorative accent; design and color as selected by Architect, K.E.C. to verify.

ITEM #41: CASH REGISTER -- (N.I.C. - FURNISHED BY OWNER)

QUANTITY: Three (3)

ITEM #42: DROP-IN ICE CREAM MERCHANDISER

QUANTITY: Three (3)
MANUFACTURER: Delfield
MODEL NO.: N227P (N058)
PERTINENT DATA: Drop-In, 12 Gallon Capacity, Removable Cover With Handle, Lexan Top and Lid
UTILITIES REQ'D: 2.9A, 120V, 1PH
ALTERNATE MFRS.: ColorPoint by Low-Temp Industries

Furnish and set-in-place per Equipment Plan, Sheet K-101; Manufacturer's Instructions and the following:

1. Accessories:
   -- #N227P-LK lock bar kit, each unit.
   -- #3234189 transparent lid, per pan opening.
   -- Lift gate option, each unit.

2. Cord and plug set.

NOT FOR BIDDING PURPOSES

ITEM #43: AIR-SCREEN MERCHANDISER

QUANTITY: Three (3)
MANUFACTURER: Structural Concepts
MODEL NO.: NE4827RSSV (N058)
PERTINENT DATA: 50" L, Slide-in Base, Self-Contained, Self-Service
UTILITIES REQ'D: 9.6A, 120V, 1PH; 1" IW
ALTERNATE MFRS.: None

Furnish and set-in-place per Equipment Plan, Sheet K-101; Manufacturer's Instructions, and the following:

1. Accessories: (each unit)
   -- LED top and shelf lights.
   -- Rear door lock.
   -- Locking security cover.
   -- 5-year compressor warranty.

2. Cord and plug set.

3. Mount securely to Item #40B: Solid Top Counters.

ITEM #44: MILK COOLER, MOBILE

QUANTITY: One (1)
MANUFACTURER: Continental
MODEL NO.: MC4-SS-D/OOLP (N058)
PERTINENT DATA: 49" Wide, Dual Access, Forced-Air, 12-Crate Capacity
UTILITIES REQ'D: 1/3HP, 120V, 1PH
ALTERNATE MFRS.: None

Furnish and set-in-place per Equipment Plan, Sheet K-101; Manufacturer's Instructions and the following:

1. Stainless steel exterior and interior.

2. Cord and plug set.

3. Cylinder lid lock.

4. Swivel casters with brakes.

5. Accessories:
   -- #5-222 corner bumpers.
   -- Foot pedal floor lock.
   -- Digital thermometer.
   -- Laminate finish to match Serving Counter.
   -- Modified low profile evaporator center down duct.

NOT FOR BIDDING PURPOSES

ITEM #45: CONDIMENT COUNTER, MOBILE

QUANTITY: Two (2)
MANUFACTURER: Shelleysteel by The Delfield Company
MODEL NO.: SC-50-NU-MOD (N058)
PERTINENT DATA: Stainless Steel, #14GA Stainless Steel Top, With Storage Base
UTILITIES REQ'D: ----
ALTERNATE MFR.: ColorPoint by Low-Temp Industries; Piper Products

Furnish and set-in-place per Equipment Plan, Sheet K-101; Manufacturer's Shop Drawing and the following:

1. (B) - 10" wide full-length solid tray slides mounted on fold-down brackets mounted @ 29" A.F.F.

2. Enclosed understorage base with bottom and intermediate stainless steel shelf and stainless steel sliding doors with lock.

3. 5" diameter heavy-duty swivel casters, all four (4) with brakes.

4. Modified counter height set @ 30" A.F.F.

5. Front panels and exposed sides with decorative accent; design and color as selected by Architect, K.E.C. to verify.

ITEM #46: ELECTRONIC MENU BOARD -- (N.I.K.E.C. –FURNISHED BY OWNER)

QUANTITY: Two (2)

ITEM #47: TRASH CONTAINER, MOBILE

QUANTITY: Two (2)
MANUFACTURER: Rubbermaid Commercial Products, Inc.
MODEL NO.: FG263200GRAY (N058)
PERTINENT DATA: 32-Gallon Capacity
UTILITIES REQ'D: ----
ALTERNATE MFRS.: Continental Plastic

Furnish and set-in-place per Equipment Plan, Sheet K-101; Manufacturer's Instructions and the following:

1. Accessories:
   -- Two (2) #FG263100GRAY matching flat lids.
   -- Two (2) #FG264000BLA conversion dollies.

NOT FOR BIDDING PURPOSES

ITEM #48: POT & PAN SHELVING, MOBILE

QUANTITY: Two (2)
MANUFACTURER: InterMetro Industries Corporation
MODEL NO.: MetroMax i (N058)
PERTINENT DATA: Open Grid Shelf, Polymer
UTILITIES REQ'D: ----
ALTERNATE MFR.: None

Furnish and set-in-place per Equipment Plan, Sheet K-101, Manufacturer's Instructions and the following:

1. Two (2) #MX2448G sections; 24" W x 48" L x 4-tier high.

2. Eight (8) #MX63UP polymer posts for stem casters, 61-3/16" high.

3. Four (4) #5MPX polyurethane swivel casters with donut bumpers.

4. Four (4) #5MPBX polyurethane casters with brakes and donut bumpers.

5. Plastic wedge lock connectors, quantity as required.

6. Locate bottom shelf @ 18" A.F.F., space remaining shelves equally.

7. Accessories:
   -- Two (2) #XTR2448XE tray drying racks.
   -- Ten (10) #MXD24-8 shelf dividers.

ITEM #49: SOILED DISHTABLE/POT WASHING SINK

QUANTITY: One (1)
MANUFACTURER: Custom Fabricated
MODEL NO.: #14 GA Stainless Steel
PERTINENT DATA: 13'-6" Long x 2'-6" Wide x 2'-10" High
UTILITIES REQ'D: (2) 3/4" HW, (2) 3/4" CW, (3) 2" IW
ALTERNATE MFRS.: None

Fabricate and set-in-place per Equipment Plan, Sheet K-101; Fabrication Detail, Sheet K-501 and the following:

Pot Washing Sink:

1. Front edge roll per Detail 1.02B.

2. 13" high back and right end splash per Detail 1.04A.

3. Framework per Detail 1.05.

4. Legs per Detail 1.07.

5. Crossbracing per Detail 1.10.

NOT FOR BIDDING PURPOSES

ITEM #49: (Continued)

6. Stainless steel undershelf on right end per Detail 1.11.

7. 8'-0" long stainless steel overshelf per Detail 1.12.

8. Pot sink and drainboards per Detail 3.01.

9. Sound-deaden underside of sinks and drainboards with NSF-approved sound dampening material.

10. Accessories:
    -- Two (2) T&S #B-0290 backsplash mounted swing spout faucets.
    -- Three (3) T&S #B-3950-01 twist waste valves with overflow assemblies and #010387-45 basket strainers.

11. Item will remain shrink-wrapped until ready for final connection by Plumbing Contractor. Immediately following completion of final connections, K.E.C. shall re-shrink-wrap tubs or provide removable panel to avoid use by construction trades. Post sign on wall above sink tubs in English and Spanish stating: WARNING! NOT TO BE USED BY CONSTRUCTION TRADES. FAILURE TO COMPLY WILL RESULT IN $500.00 FINE AND ALL COSTS TO REPLACE ITEM WITH NEW.

Soiled Dishtable:

1. Front edge roll per Detail 1.02B.

2. 13" high back splash per Detail 1.04A.

3. Framework per Detail 1.05.

4. Legs per Detail 1.07.

5. Soiled dishtable per Detail 2.02.

6. Table trough at entrance to dishmachine per Detail 2.03.

7. Weld disposer cone to underside of left-hand drainboard.

8. Stainless steel disposer switch bracket.

9. Sound-deaden underside of sink and drainboard with NSF-approved sound dampening material.

10. Accessories:
    -- One (1) T&S #B-0133 backsplash-mounted pre-rinse spray with built-in back flow preventer and #B-0109 wall bracket.

NOT FOR BIDDING PURPOSES

ITEM #50: DISPOSER

QUANTITY: One (1)
MANUFACTURER: In-Sink-Erator
MODEL NO.: SS-200-12B-AS101 (N058)
PERTINENT DATA: 12" Diameter Cone Assembly
UTILITIES REQ'D: 2 HP, 480V, 3PH; 1/2" CW, 2" W
ALTERNATE MFRS.: Salvajor

Furnish and install per Equipment Plan, Sheet K-101; Manufacturer's Instructions and the following:

1. #AS-101 Aqua saver control mounted on 14 GA stainless steel bracket.

2. Weld cone to underside of left-hand drainboard, Item #49.

3. Accessories:
   -- One (1) T&S Model #B-0455 vacuum breaker in lieu of standard unit.

ITEM #51: DISHMACHINE

QUANTITY: One (1)
MANUFACTURER: Hobart Corporation
MODEL NO: AM-15T+BUILDUP (N058)
PERTINENT DATA: Fully-Automatic, High-Temp, Door-Type, With Built-in Booster Heater (70°F Rise), Tall Series
UTILITIES REQ'D: 23.7A, 480V, 3PH; 10.0A, 120V, 1PH; 3/4"HW (140°F.), 1/2"CW (Drain Water Cooling Kit), 1-1/2" IW
ALTERNATE MFRS: Meiko; Jackson

Furnish and set-in-place per Equipment Plan, Sheet K-101; Manufacturer's Instructions and the following:

1. Factory installed vacuum breaker.

2. Soap dispensing system and rinse additive system.

3. Stainless steel feet, frame, legs and front panel.

4. Electric tank heat.

5. Straight-thru installation.

6. Vent fan control.

7. Accessories:
   -- Two (2) #DISHRAK-PEG20 peg-type dish racks.
   -- Two (2) #DISHRAK-COM20 combination-type dish racks.
   -- One (1) #DWT-AM15 drain water tempering kit.
   -- One (1) built-in booster heater.
   -- One (1) WTRHAM-ARREST water hammer arrestor kit with brass pressure regulator valve.
   -- One (1) SPEC-KIT single-point electrical connection.

NOT FOR BIDDING PURPOSES

ITEM #51: (Continued)

-- One (1) PRESREG-3/40BR ¾" brass pressure regulator.
-- Two (2) sheet pan racks.

ITEM #52: CONDENSATE CANOPY

QUANTITY: One (1)
MANUFACTURER: Captive-Aire Systems, Inc.
MODEL NO: 4230VHB-G (N058)
PERTINENT DATA: Stainless Steel, Exhaust Only Canopy
UTILITIES REQ'D: 525 CFM; 3/4" IW
ALTERNATE MFRS: Avtec; Gaylord

Fabricate and install per Equipment Plan, Sheet K-101; Canopy Details, Sheet K-503 and the following:

1. 3'-6" wide x 3'-6" long x 2'-6" high with bottom edge mounted at 6'-8" A.F.F. Entire unit constructed of 18 GA type 304 stainless steel with #4 finish on all exposed surfaces.

2. 2" wide full perimeter integral gutter with 1/2" turn-up and 3/4" stainless steel drain connection.

3. Integral stainless steel rod hanger brackets, each corner.

4. Stainless steel duct tap collar with removable aluminum mesh filter.

5. Stainless steel perimeter closure panels to finished ceiling by K.E.C.; verify ceiling height.

6. Accessories:
   -- #18 gauge stainless steel wall flashing full length of hood to extend from top of finish floor coved base up to bottom edge of hood body. Attach to wall with non-exposed fasteners and seal with clear silicone sealant.
   -- Field wrapper.

ITEM #53: CLEAN DISHTABLE

QUANTITY: One (1)
MANUFACTURER: Custom Fabricated
MODEL NO.: #14 GA Stainless Steel
PERTINENT DATA: 6'-0" Long x 2'-6" Wide x 2'-10" High
UTILITIES REQ'D: ----
ALTERNATE MFRS: None

Fabricate and set-in-place per Equipment Plan, Sheet K-101; Fabrication Detail, Sheet K-501, and the following:

1. Front edge roll per Detail 1.02B.

2. 13" high back and left end splash per Detail 1.04A.

NOT FOR BIDDING PURPOSES

ITEM #53: (Continued)

3. Framework per Detail 1.05.

4. Legs per Detail 1.07.

5. 5'-2" stainless steel overshelf per Detail 1.12.

6. Stainless steel undershelf per Detail 1.11.

7. Dishtable per Detail 2.02.

8. Sound-deaden underside of drainboard with NSF-approved sound dampening material.

ITEM #54: MOP SINK & RACK

QUANTITY: One (1)
MANUFACTURER: Eagle Group
MODEL NO.: F1916 (N058)
PERTINENT DATA: Floor Mounted, Stainless Steel
UTILITIES REQ'D: 1/2" HW, 1/2" CW, 2" W
ALTERNATE MFRS.: Advance/Tabco; IMC/Teddy

Furnish and set-in-place per Equipment Plan, Sheet K-101; Manufacturer's Instructions and the following:

1. Accessories:
   -- One (1) #312690 service sink wall faucet.
   -- One (1) #321561 mop holder.
   -- One (1) #312689 hose and bracket assembly.

2. K.E.C. to furnish #16 gauge stainless steel wall flashing along two (2) walls adjacent sink, 48" high. Attach to wall with non-exposed fasteners and seal to wall and sink.

ITEM #55: SHELVING

QUANTITY: One (1)
MANUFACTURER: InterMetro Industries Corporation
MODEL NO.: MetroMaxQ (N058)
PERTINENT DATA: Five-Tier High, Free-Standing, Polymer
UTILITIES REQ'D: ----
ALTERNATE MFRS.: None

Furnish and set-in-place per Equipment Plan, Sheet K-101; Manufacturer's Instructions and the following:

<u>Janitor's Closet</u>:

1. One (1) #MQ1842G section; 18" W x 42" L x 5-tier high.

2. Four (4) #MQ74PE polymer posts; 74-3/16" high.

NOT FOR BIDDING PURPOSES

ITEM #55: (Continued)

3. Plastic wedge lock connectors, quantity as required.

4. Locate bottom shelf @ 12" A.F.F.; space remaining shelves equally.

ITEM #56: WASHER -- (N.I.K.E.C.) – FURNISHED BY OWNER

QUANTITY: One (1)

ITEM #57: DRYER -- (N.I.K.E.C.) – FURNISHED BY OWNER

QUANTITY: One (1)

ITEM #58: TILT TRUCK, MOBILE

QUANTITY: One (1)
MANUFACTURER: SpecialMade
MODEL NO.: SMFG130400BLA
PERTINENT DATA: Rotational Molded, Utility Duty, 450 lb. capacity
UTILITIES REQ'D: ----
ALTERNATE MFRS.: None

Furnish and set-in-place per Equipment Plan, Sheet K-101 and Manufacturer's Instructions.

ITEM #59: PLATFORM TRUCK, MOBILE

QUANTITY: One (1)
MANUFACTURER: Rubbermaid
MODEL NO.: FG440100BLA
PERTINENT DATA: Triple Trolley, Standard Duty, 500 lb. capacity
UTILITIES REQ'D: ----
ALTERNATE MFRS.: None

Furnish and set-in-place per Equipment Plan, Sheet K-101 and Manufacturer's Instructions.

ITEM #60: WORKTABLE

QUANTITY: One (1)
MANUFACTURER: Custom Fabricated
MODEL NO.: #14 GA Stainless Steel
PERTINENT DATA: 7'-0" Long x 2'-6" Wide x 3'-0" High
UTILITIES REQ'D: ----
ALTERNATE MFRS.: None

NOT FOR BIDDING PURPOSES

ITEM #60: (Continued)

Fabricate and set-in-place per Equipment Plan, Sheet K-101; Fabrication Detail, Sheet K-501; and the following:

1. Perimeter edge rolls per Detail 1.02.1M.

2. Framework per Detail 1.05.

3. Legs per Detail 1.07.

4. Stainless steel undershelf per Detail 1.11.

5. Two (2) stainless steel drawer assemblies per Detail 1.14, Type I with locks.

6. Worktable per Detail 2.01.

7. Two (2) 20A, 120V receptacles with stainless steel coverplate mounted on each end. Pre-wire to junction box mounted below undershelf and conceal wiring within tubular leg.

8. Sound-deaden underside of tabletop with NSF-approved sound dampening material.

ITEM #61: MICROWAVE STEAMER OVEN – (N.I.K.E.C.) – FURNISHED BY OWNER

QUANTITY: One (1)

(END OF FOODSERVICE ITEMIZED SPECIFICATIONS)

NOT FOR BIDDING PURPOSES

STANDARD DETAILS

NOT FOR BIDDING PURPOSES

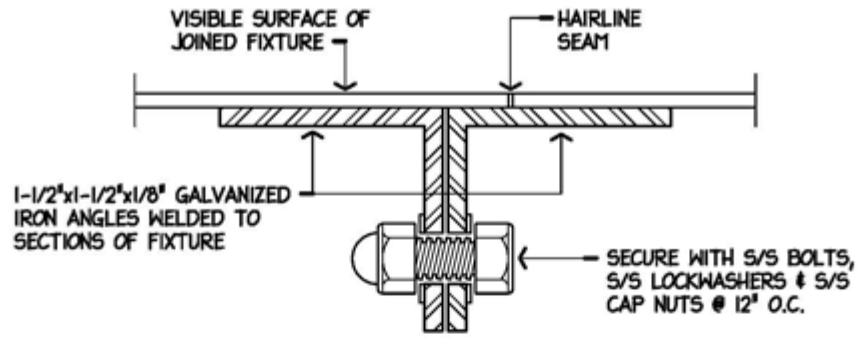

NOTE! JOINED SECTIONS SHALL BE DRAWN TOGETHER LEAVING ONLY A HAIRLINE SEAM.

A. BOLT DRAWN JOINT

NOTE! ON FIXTURES SPECIFIED WITH WELDED FIELD JOINTS, WELDS SHALL BE CONTINUOUS, GROUND & POLISHED LEAVING NO VISIBLE EVIDENCE OF WELD.

B. WELDED BUTT JOINT

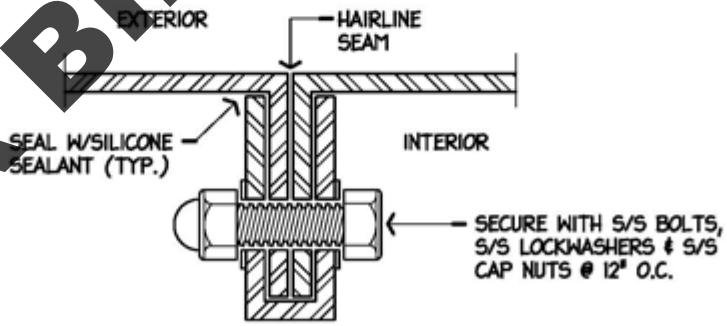

NOTE! JOINED SECTIONS SHALL BE DRAWN TOGETHER LEAVING ONLY A HAIRLINE SEAM.

C. RAISED CAP SEAM - KNUCKLE JOINT

NYIKOS ASSOCIATES, INC. Food Facilities Design/Consulting	DESCRIPTION: FIELD JOINTS & ASSEMBLY	STANDARD DTL: 1.01

NOT FOR BIDDING PURPOSES

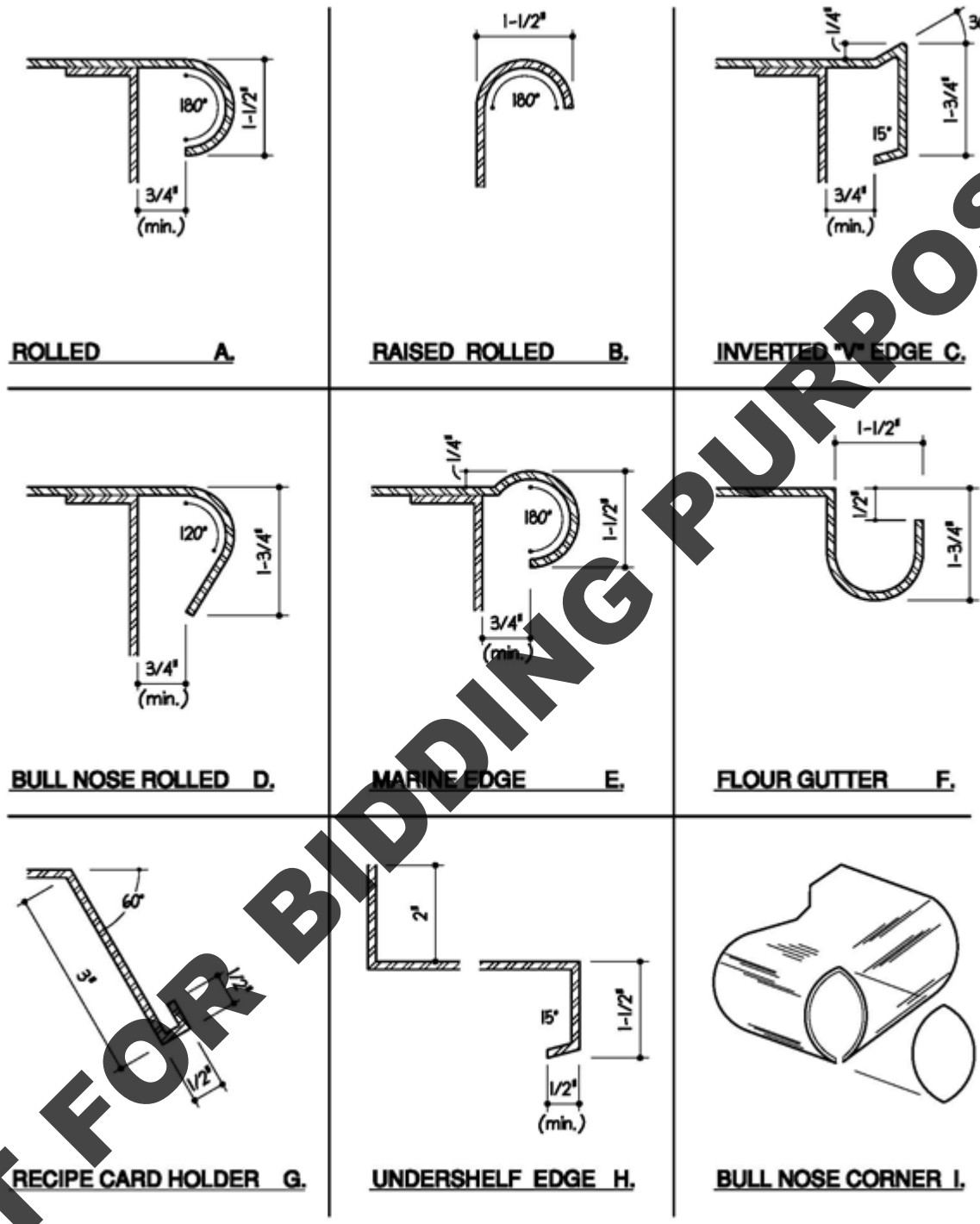

NYIKOS ASSOCIATES, INC.
Food Facilities Design/Consulting

DESCRIPTION: EDGES

STANDARD DTL: 1.02

NOT FOR BIDDING PURPOSES

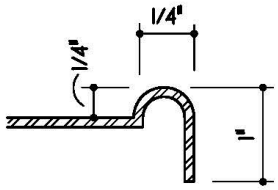

RAISED OPENING EDGE J.

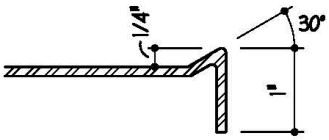

RAISED OPENING EDGE K.

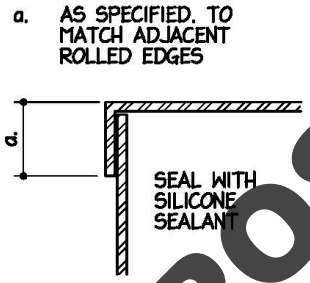

STRAIGHT TURN DOWN L.

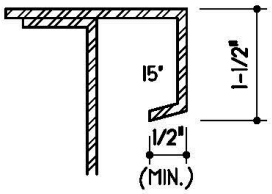

TURNED DOWN EDGE M.

NYIKOS ASSOCIATES, INC.
Food Facilities Design/Consulting

DESCRIPTION: EDGES

STANDARD DTL: 1.02.1

NOT FOR BIDDING PURPOSES

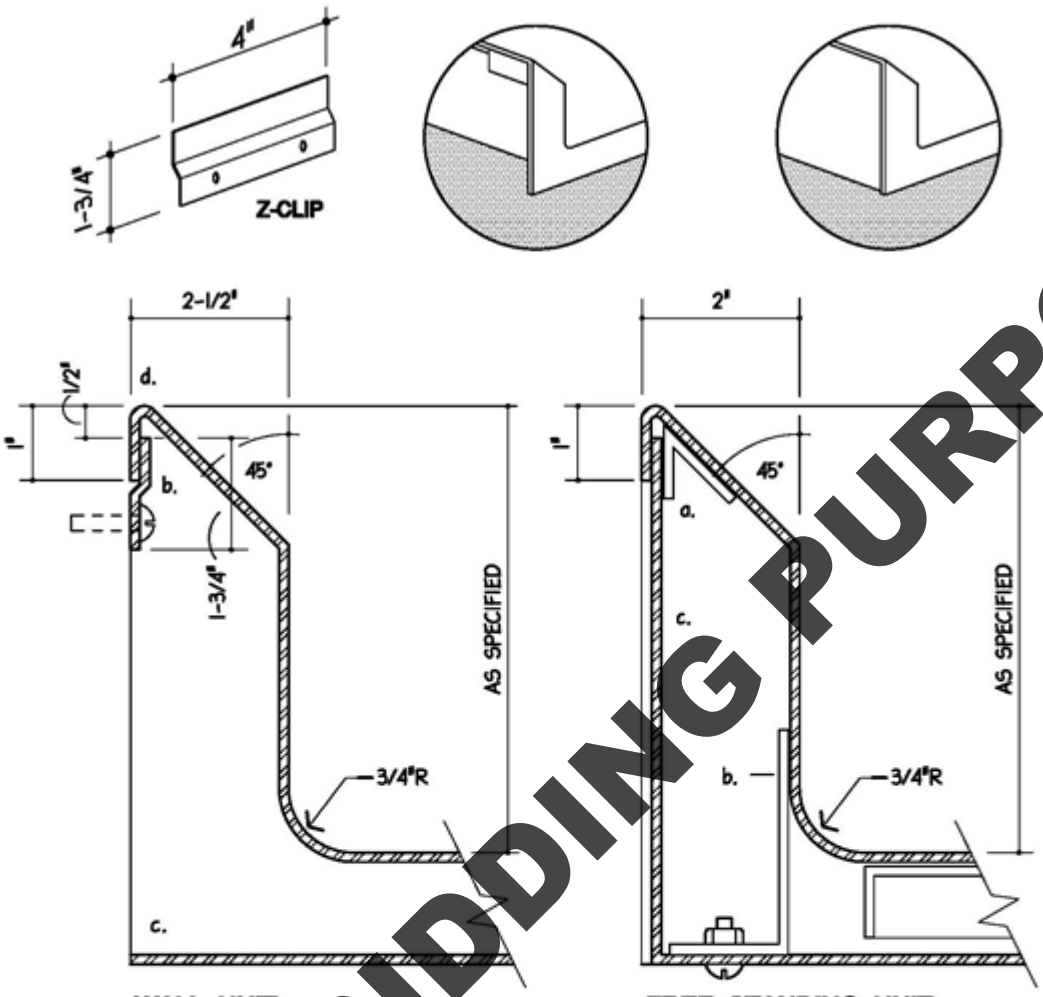

WALL UNIT

DETAIL A

a. 2-1/2" AT SINK TO ALLOW FOR CONNECTED OVERFLOW

b. 12 GA. S/S CLIPS, 4" LONG, FASTENED TO EACH WALL END OF EACH UNIT @ 4'-0" ON CENTER. SECURE TO WALL W/A MINIMUM OF TWO 1/4"x20 S/S TOGGLE BOLTS OR EXPANSION SHIELDS.

c. EXPOSED ENDS TO BE FULLY WELDED CLOSED.

d. SEAL ALL AROUND TO WALL WITH SILICONE SEALANT.

FREE STANDING UNIT

DETAIL B

a. 1"x1"x14 GA. S/S x1-1/2"LONG RETAINING CLIP WELDED IN PLACE. ONE AT EACH END OF UNIT AND 12" ON CENTER.

b. 2-1/2"x1-1/2x1-1/2" 14 GA.S/S CLIP WELDED TO SPLASH. ONE AT OF EACH UNIT @ 12" ON CENTER.

c. 14 GA S/S PANEL SECURED TO CLIPS W/ S/S OVALHEAD BOLT. WELD NUT TO CLIP.

d. EXPOSED ENDS TO BE FULLY WELDED.

NYIKOS ASSOCIATES, INC. Food Facilities Design/Consulting	DESCRIPTION: BACKSPLASHES	STANDARD DTL: 1.04

NOT FOR BIDDING PURPOSES

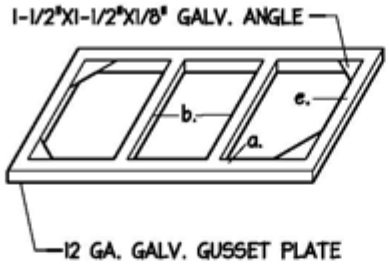

TABLES

A.

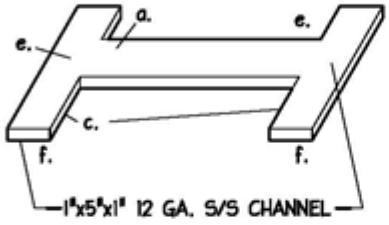

DISHTABLES

B.

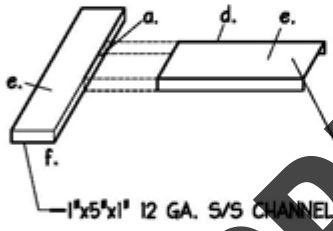

SINK DRAINBOARDS

C.

a. FULLY WELDED CONSTRUCTION.

b. ANGLE LOCATION - ENDS; SIDES OF TOP INSETS; INTERMEDIATES 24" ON CENTER.

c. CHANNEL LOCATION - ENDS AND INTERMEDIATE MAXIMUM 6'-6" O.C.

d. ADD CENTER CHANNEL WHEN DRAINBOARD LENGHT EXCEEDS 5'-6".

e. SECURE TOP TO FRAMEWORK WITH WELDED STUDS, S/S LOCKWASHERS AND CAP NUTS.

f. CLOSE CHANNEL AT FRONT ONLY.

NYIKOS ASSOCIATES, INC. Food Facilities Design/Consulting	DESCRIPTION: TABLE & DRAINBOARD FRAMEWORK	STANDARD DTL: 1.05

NOT FOR BIDDING PURPOSES

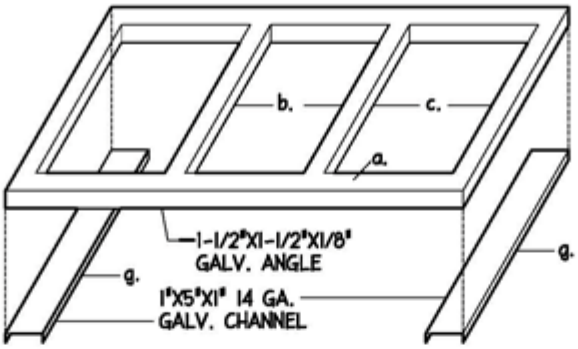

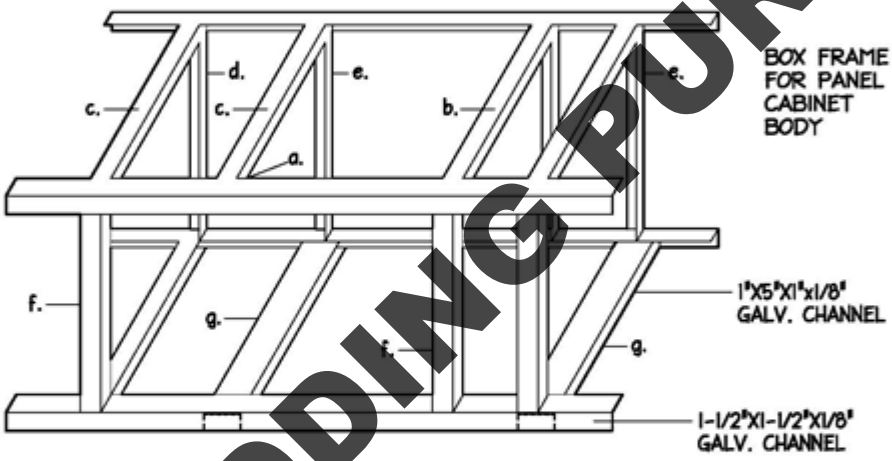

a. FULLY WELDED CONSTRUCTION.

b. SECURE TOP TO FRAMEWORK WITH WELDED STUDS, S/S LOCKWASHERS, AND CAP UNITS. MAXIMUM 15" ON CENTER.

c. TOP ANGLE LOCATION - ENDS; SIDES OF TOP INSETS; UNDER HEAVY EQUIPMENT LEGS; INTERMEDIATES 24" ON CENTER.

d. BACK ANGLE LOCATION - ENDS; INTERMEDIATE MAXIMUM 5'-6" ON CENTER.

e. CAFETERIA FRONT ANGLE (CHANNEL) LOCATION - ENDS; INTERMEDIATES TO CORRESPOND TO PILASTERS, SLIDE BRACKETS, PANEL SPACING, MAXIMUM 4'-0" ON CENTER. REF: STDS.-4.01 THRU 4.04.

f. WORK SIDE ANGLE LOCATION - ENDS; SIDE OF OPENINGS; INTERMEDIATES MAXIMUM 5'-6" ON CENTER.

g. BOTTOM LEG CHANNEL LOCATION - ENDS; INTERMEDIATES CORRESPOND TO FRONT PANEL SPACING; PILASTERS, SLIDE BRACKETS. MAXIMUM 5'-6" ON CENTER.

NYIKOS ASSOCIATES, INC. Food Facilities Design/Consulting	DESCRIPTION: COUNTER FRAMEWORK	STANDARD DTL: 1.06

NOT FOR BIDDING PURPOSES

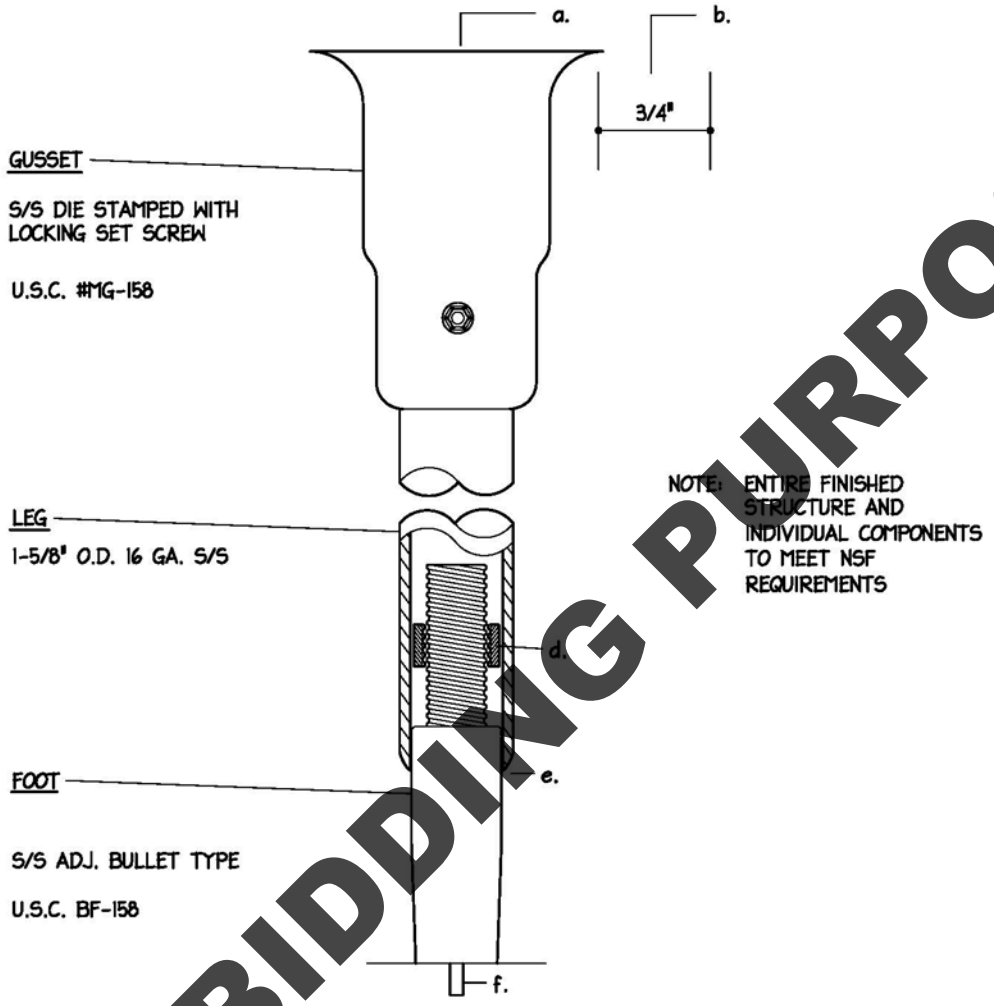

a. FULLY WELD GUSSET TO FRAMEWORK OR SINK
b. 3/4" MINIMUM CLEARANCE ALL AROUND
c. SET SCREW NOT VISIBLE TO WORKING SIDE OF EQUIPMENT.
d. MAXIMUM 1/32" CLEARANCE BETWEEN LEG AND FOOT
e. FOOT SET AT MIDPOINT TO ALLOW 1" ADJUSTMENT UP AND 1" DOWN. WITHOUT THREAD EXPOSURE.
f. LEGS UNSUPPORTED LATERALLY BY CROSSBACKING OR UNDERSHELVES SHALL BE PINNED TO FLOOR USING 1/4" DIA. X 1/2" PINS WELDED TO FOOT AND SET IN MATCHING HOLES IN THE FLOOR.

NYIKOS ASSOCIATES, INC. Food Facilities Design/Consulting	DESCRIPTION: TABLE & SINK LEGS	STANDARD DTL: 1.07

NOT FOR BIDDING PURPOSES

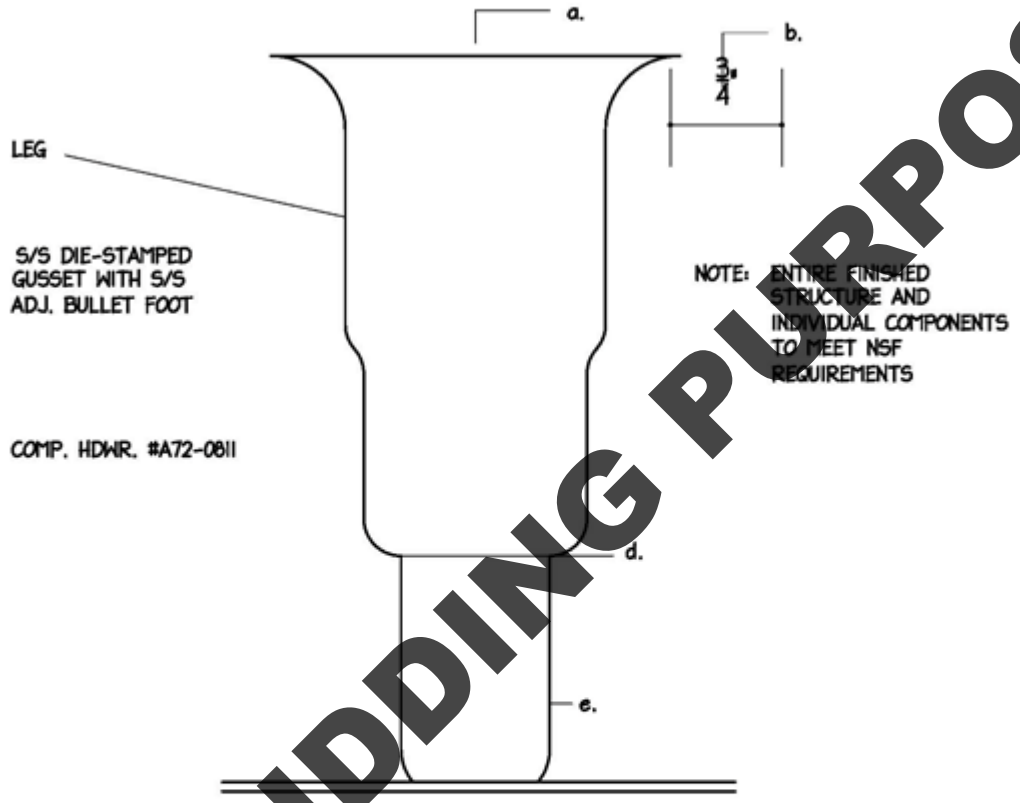

a. FULLY WELD TO FRAMEWORK CHANNEL

b. 3/4" MINIMUM CLEARANCE ALL AROUND

d. MAXIMUM 1/32" CLEARANCE BETWEEN LEG AND FOOT

e. FOOT SET AT MIDPOINT TO ALLOW 1" ADJUSTMENT UP AND 1" DOWN. WITHOUT THREAD EXPOSURE.

NYIKOS ASSOCIATES, INC. Food Facilities Design/Consulting	DESCRIPTION: COUNTER LEGS	STANDARD DTL: 1.08

NOT FOR BIDDING PURPOSES

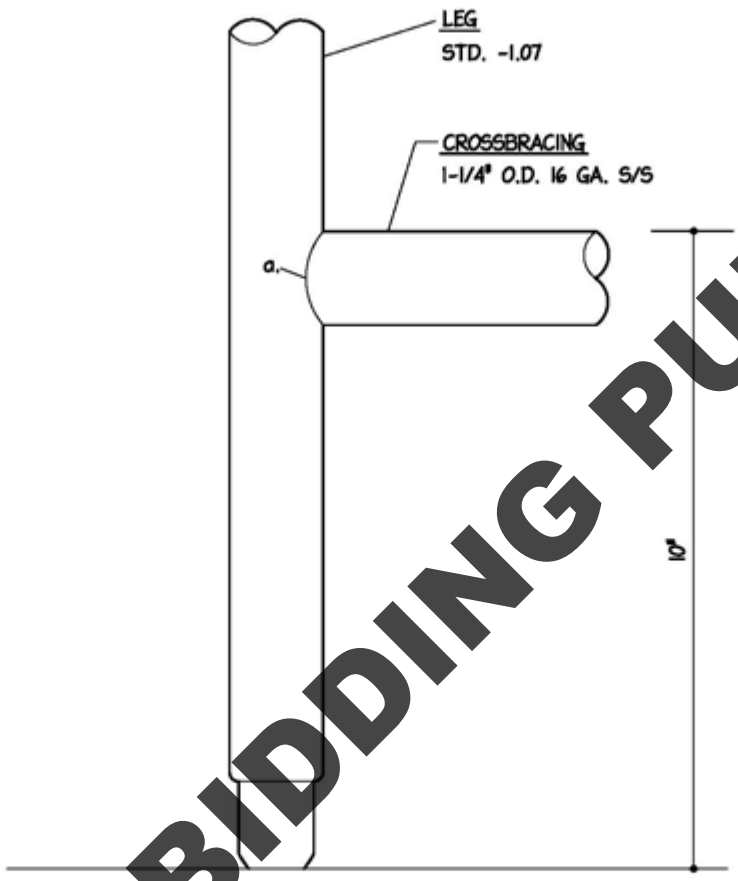

a. FULLY WELD, GRIND SMOOTH AND POLISH.

NYIKOS ASSOCIATES, INC.
Food Facilities Design/Consulting

DESCRIPTION: CROSSBRACING

STANDARD DTL: 1.10

NOT FOR BIDDING PURPOSES

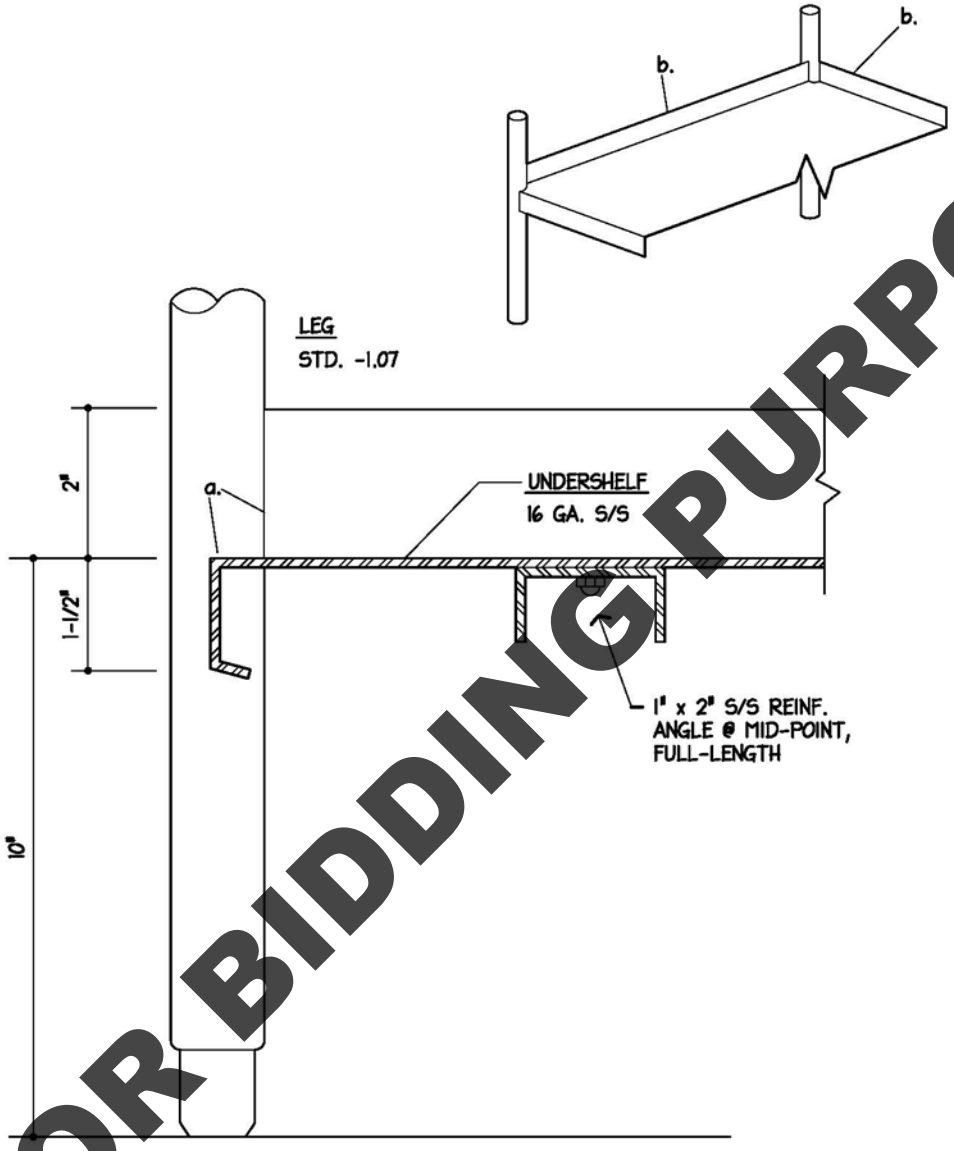

a. FULLY WELD, GRIND SMOOTH AND POLISH.

b. WHEN SPECIFIED, TURN REAR AND ENDS UP 2".

NYIKOS ASSOCIATES, INC. Food Facilities Design/Consulting	DESCRIPTION: UNDERSHELF	STANDARD DTL: 1.11

NOT FOR BIDDING PURPOSES

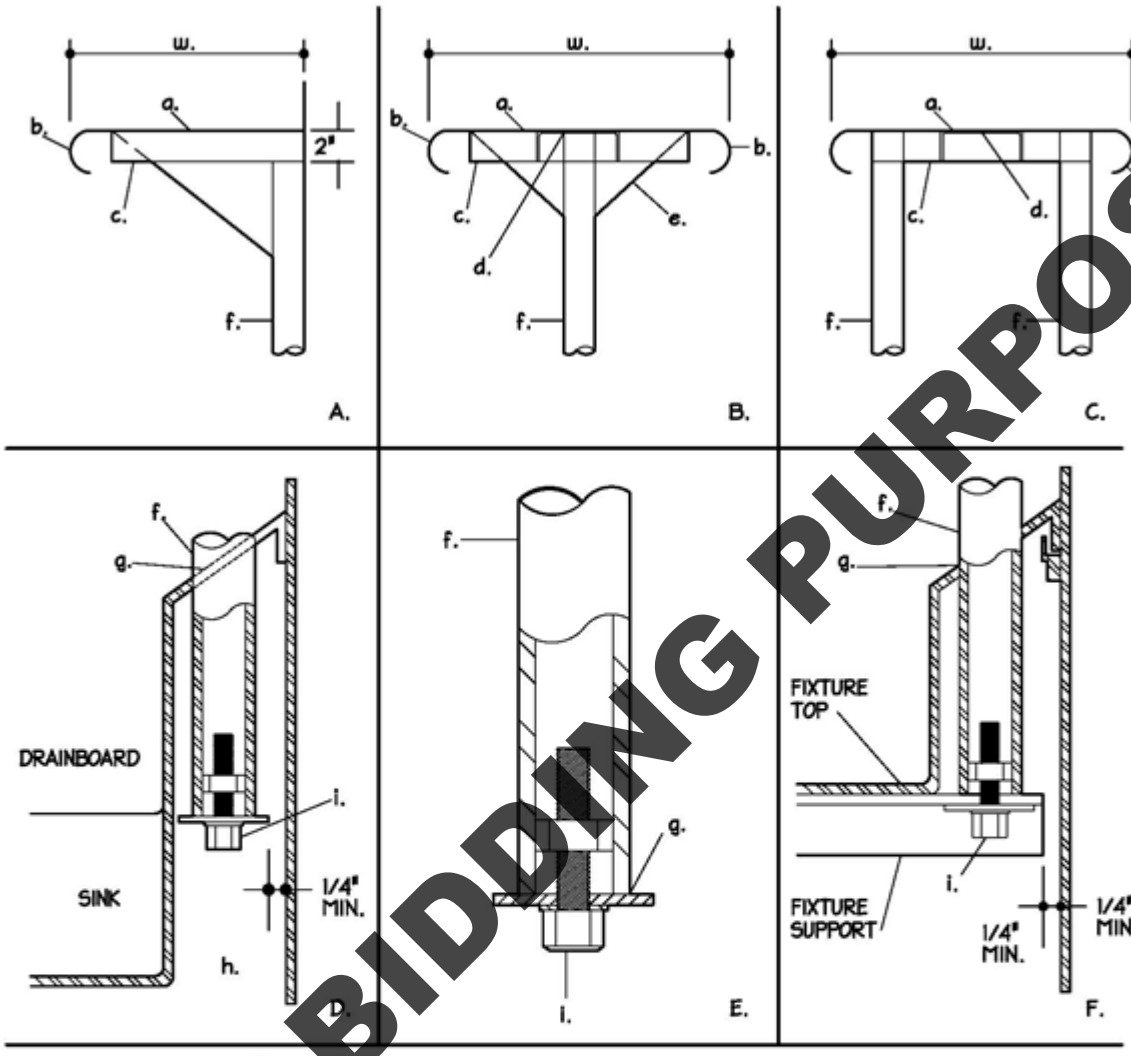

a. 16 GA S/S SHELF
b. STD.- 1.02 EDGE
c. 1"x 3"x 1" 14 GA. S/S CROSS CHANEL
d. 1"x 3"x 1" 14 GA. S/S LENGTHWISE CHANNEL WHEN LENGTH BETWEEN SUPPORTS EXCEEDS 42"
e. 14 GA. S/S BRACKETS FULLY WELDED TO SUPPORT AND CHANNEL..
f. 1-1/4" O.D. 16 GA. S/S UPRIGHT. MAXIMUM 5'-0" ON CENTER.
g. TIGHT FIT. SEAL WITH SILICONE SEALANT.
h. 1-1/2"x 1-1/2" 12 GA. S/S CLIPS WELDED TO REAR OF SPLASH AT DRAINBOARD HEIGHT.
i. 3/8"x 16 S.S. HEX HEAD BOLT, S/S NUT & S/S LOCKWASHER. NUT WELDED IN TUBE.
w. WIDTH AS SPECIFIED.

NYIKOS ASSOCIATES, INC. Food Facilities Design/Consulting	DESCRIPTION: OVERSHELVES & SUPPORTS	STANDARD DTL: 1.12

NOT FOR BIDDING PURPOSES

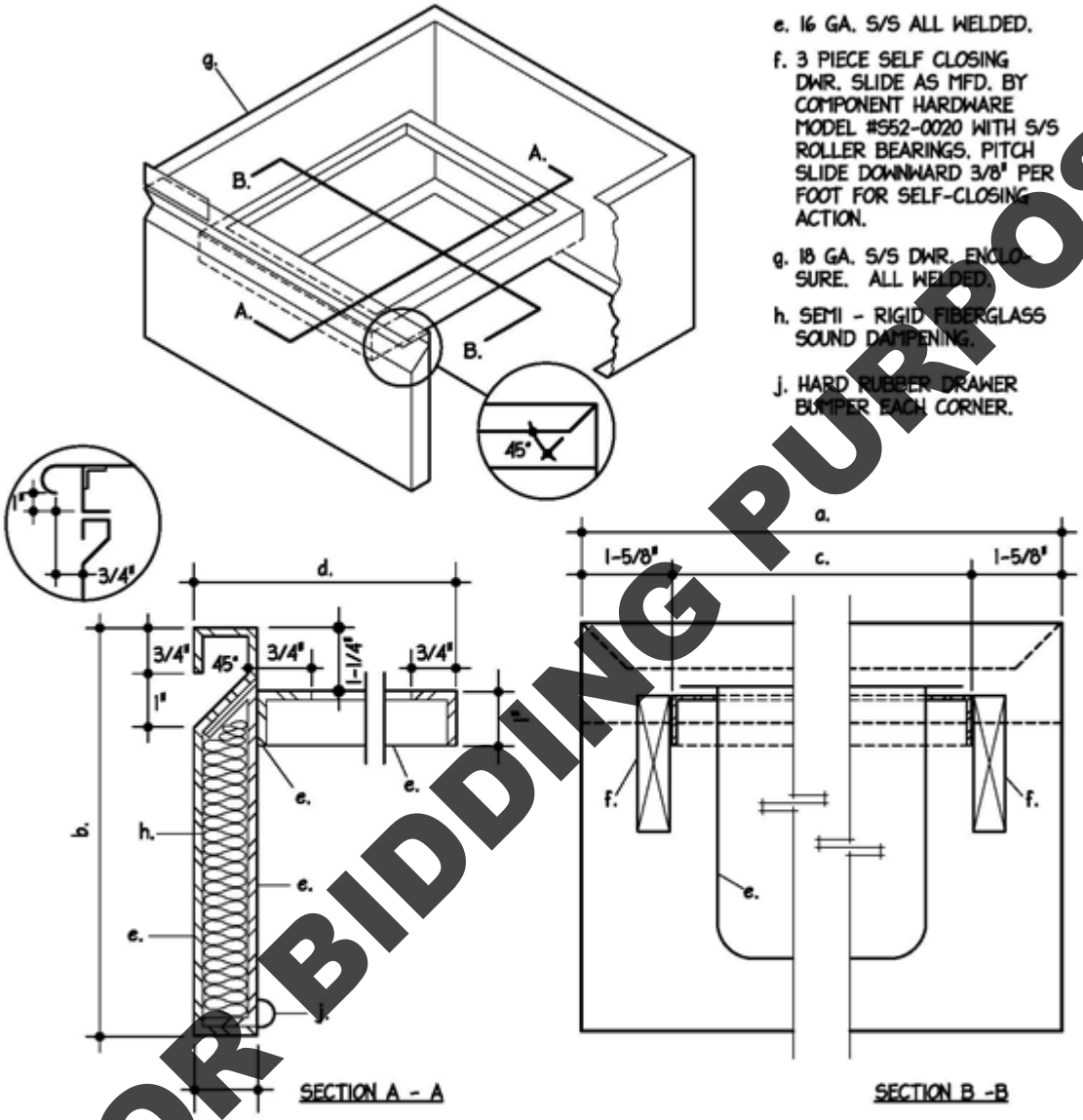

e. 16 GA. S/S ALL WELDED.

f. 3 PIECE SELF CLOSING DWR. SLIDE AS MFD. BY COMPONENT HARDWARE MODEL #552-0020 WITH S/S ROLLER BEARINGS. PITCH SLIDE DOWNWARD 3/8" PER FOOT FOR SELF-CLOSING ACTION.

g. 18 GA. S/S DWR. ENCLOSURE. ALL WELDED.

h. SEMI - RIGID FIBERGLASS SOUND DAMPENING.

j. HARD RUBBER DRAWER BUMPER EACH CORNER.

i. PROVIDE DIE - STAMPED #18 GA. S/S DWR. PANS AS FOLLOWS:

TYPE	NO.	PANS	a.	b.	c.	d.
I	1	20x20x5 DP.	25	7-1/2	21-3/4	22-3/4
II	1	20x20x8 DP.	25	10-1/2	21-3/4	22-3/4
III	1	12x20x4 DP.	25	6-1/2	21-3/4	14-1/2
IV	2	12x20x4 DP.	28	6-1/2	26-1/4	22-1/2
V	1	12x20x4 DP.	17	13-1/2	13-1/2	22-1/2

NYIKOS ASSOCIATES, INC.
Food Facilities Design/Consulting

DESCRIPTION: DRAWERS

STANDARD DTL: 1.14

NOT FOR BIDDING PURPOSES

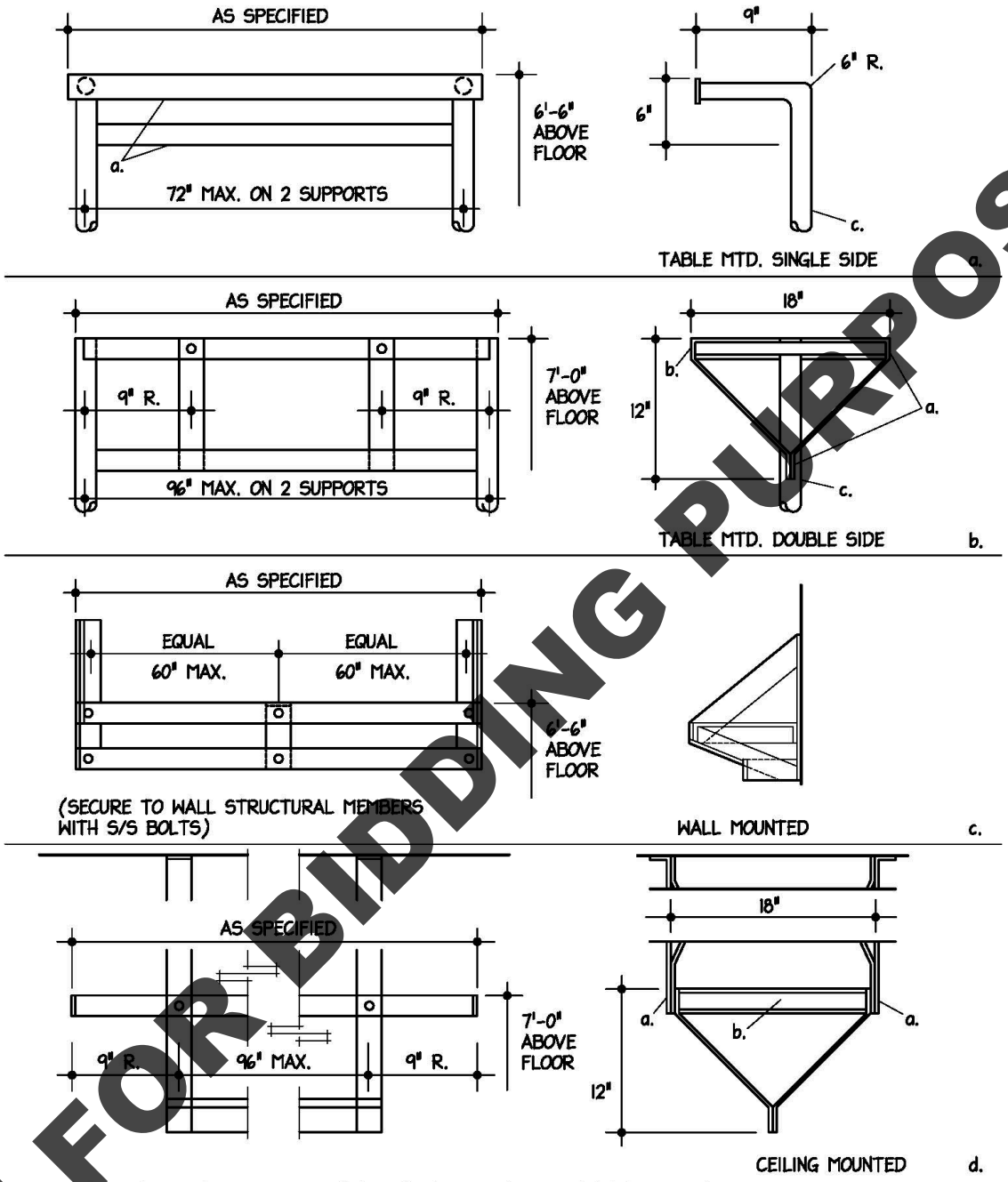

RACKS TO BE ALL WELDED CONSTRUCTION, GROUND SMOOTH AND POLISHED

a. BANDS - 1/4"x2 S/S BAR.
b. SPREADERS - 1" O.D. 16 GA. S/S.
c. UPRIGHTS - 1-5/8" O.D. 16 GA. S/S.
d. HOOKS - S/S DOUBLE PRONG SNAP-OVER STANDARD KEIL - #1576-1010-1351, 6" O/C.

NYIKOS ASSOCIATES, INC. Food Facilities Design/Consulting	DESCRIPTION: POT RACKS	STANDARD DTL: 1.18

NOT FOR BIDDING PURPOSES

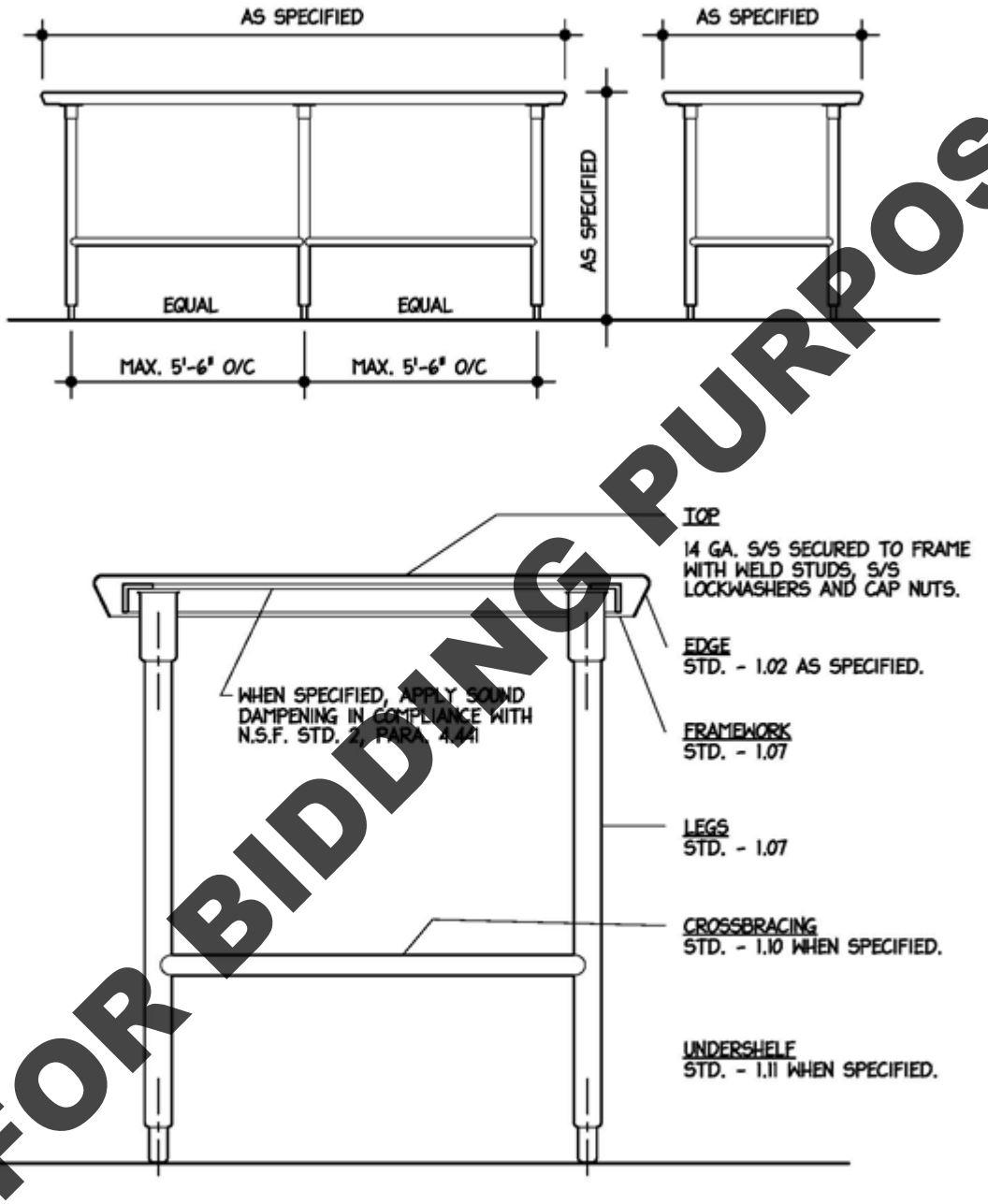

NYIKOS ASSOCIATES, INC. Food Facilities Design/Consulting	DESCRIPTION: WORKTABLE	STANDARD DTL: 2.01

NOT FOR BIDDING PURPOSES

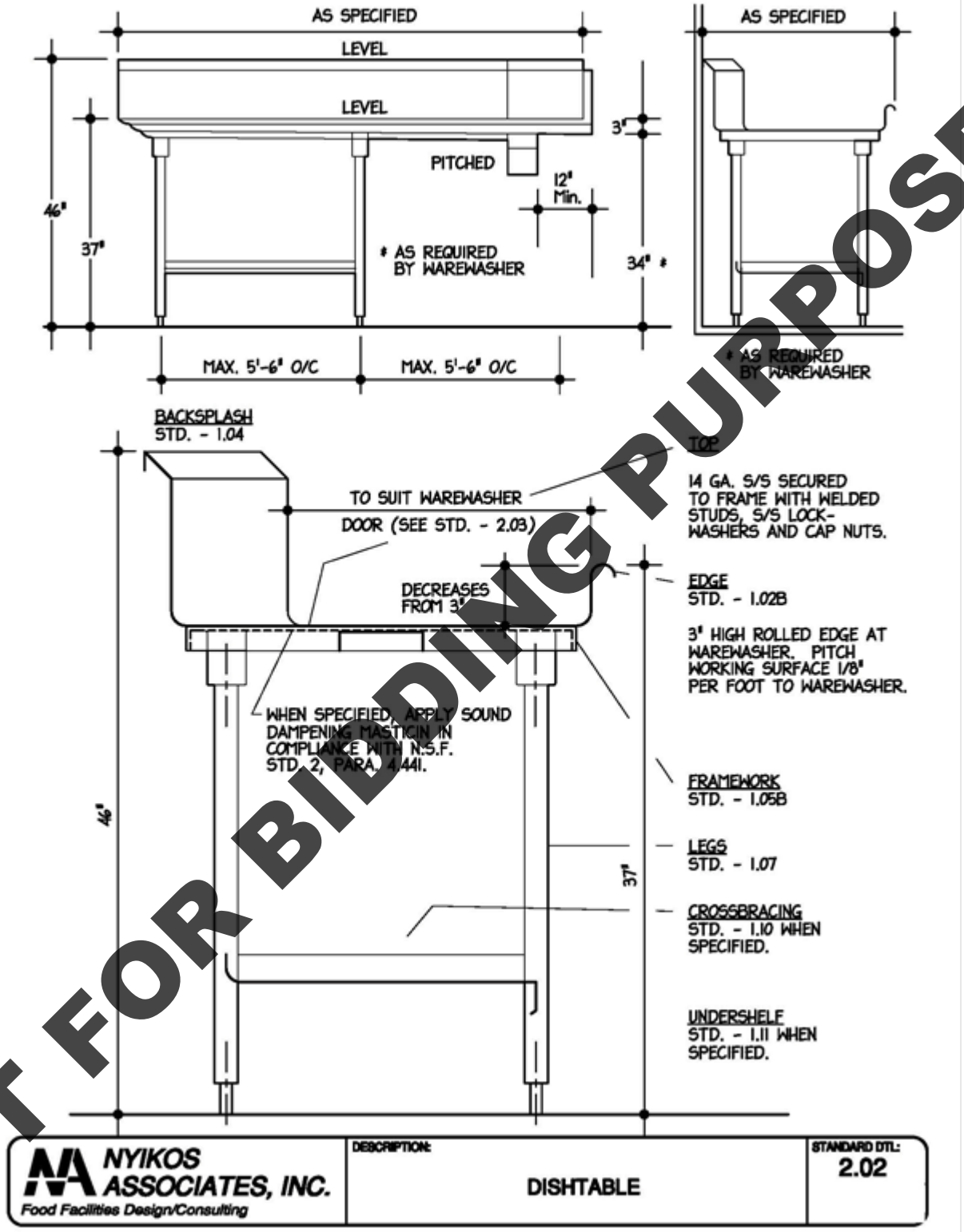

NOT FOR BIDDING PURPOSES

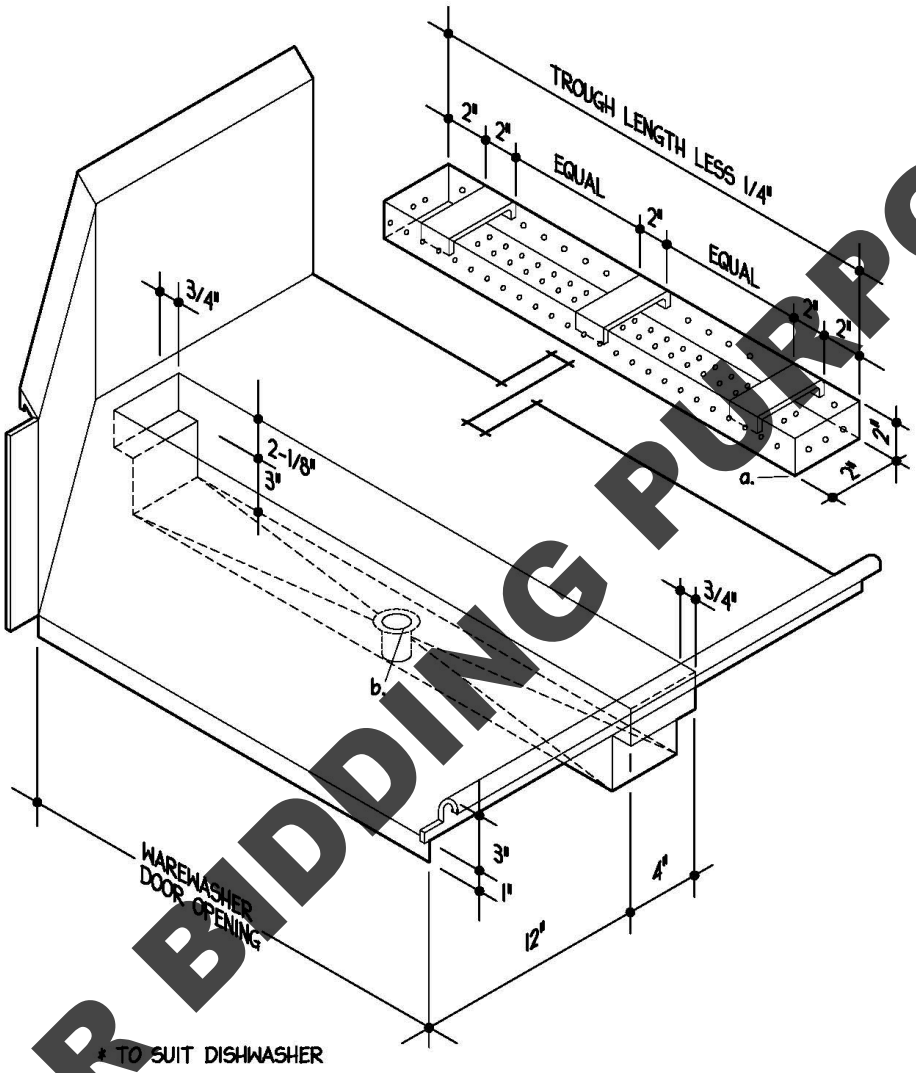

a. BASKET - 16 GA. PERFORATED S/S, ALL WELDED CONSTRUCTION.
b. WASTE - 1-1/2" CHROME PLATED BRASS DRAIN -- STANDARD-KEIL #1816-1812-1368

NYIKOS ASSOCIATES, INC. Food Facilities Design/Consulting	DESCRIPTION: WAREWASHER CONNECTION AND TABLE TROUGH	STANDARD DTL: 2.03

NOT FOR BIDDING PURPOSES

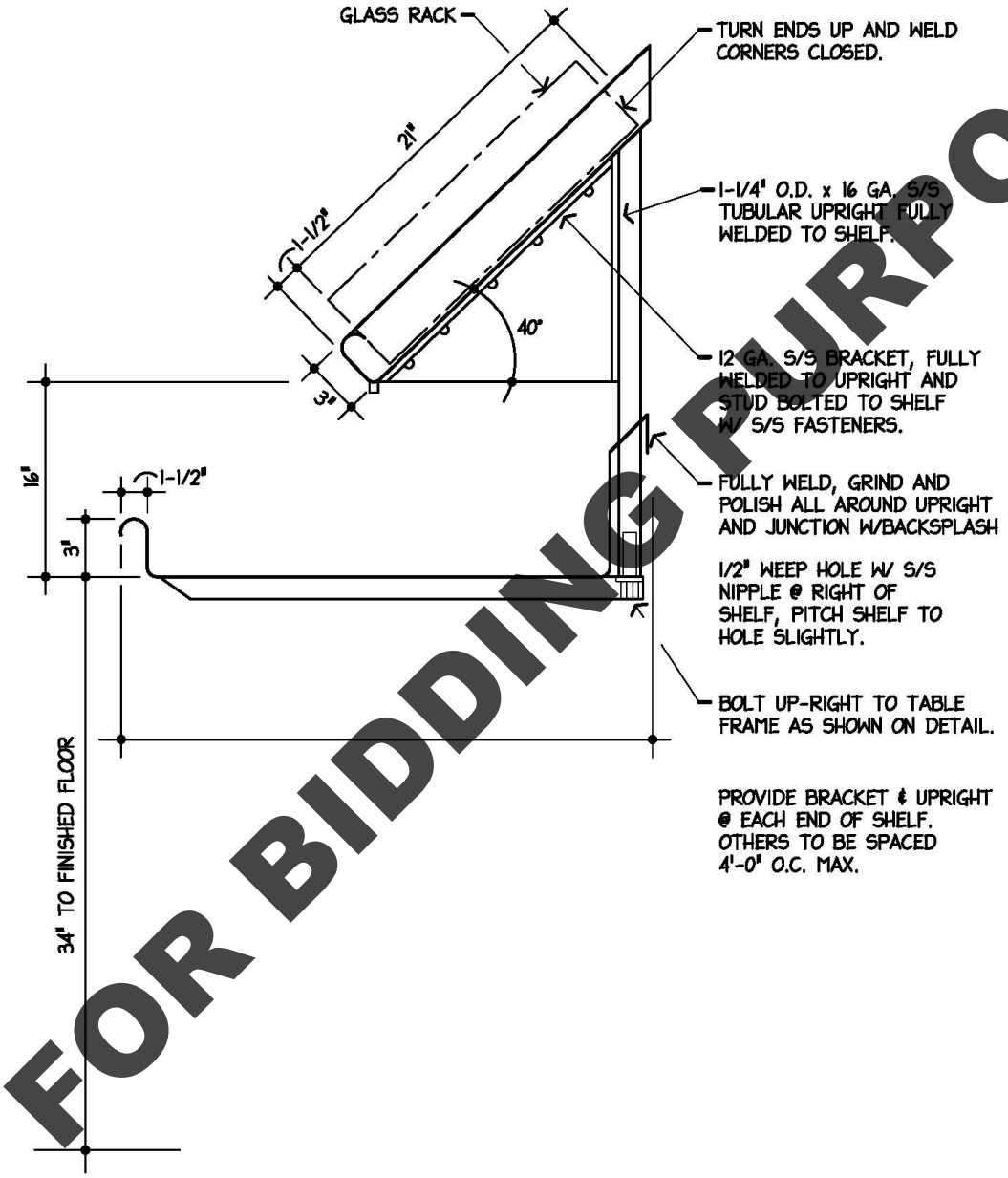

NYIKOS ASSOCIATES, INC. Food Facilities Design/Consulting	DESCRIPTION: TABLE MOUNTED RACKING SHELF	STANDARD DTL: 2.17

NOT FOR BIDDING PURPOSES

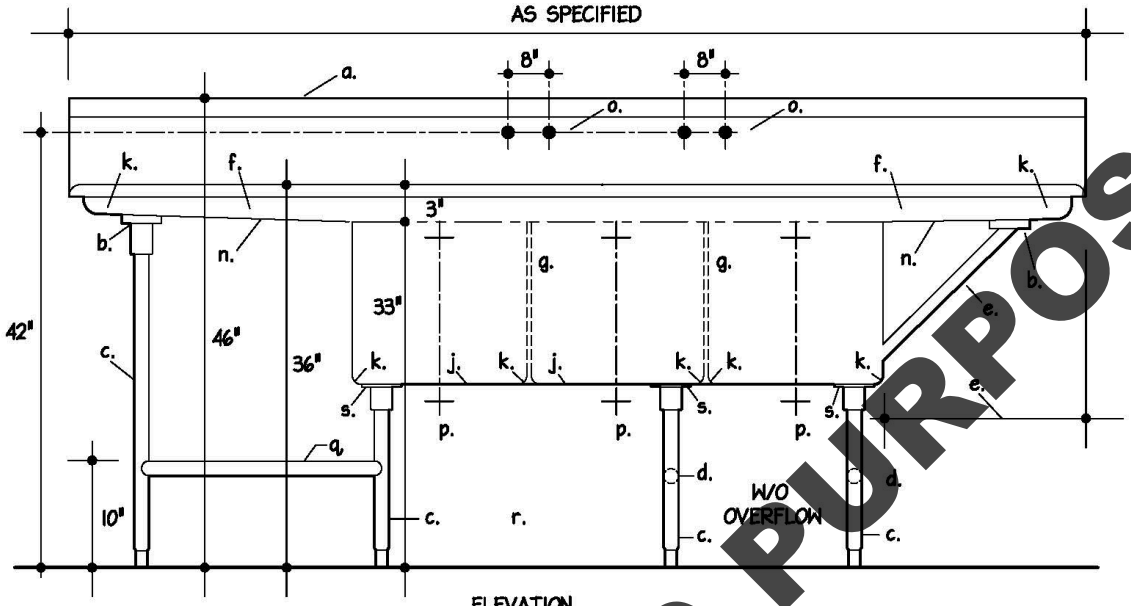

ELEVATION

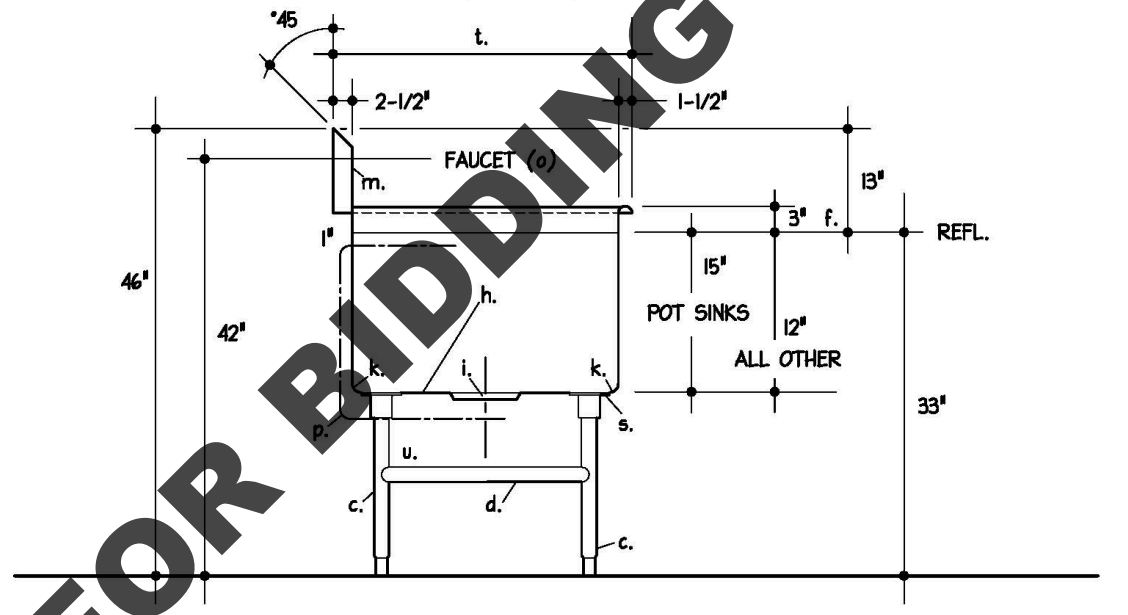

TYPICAL SECTION

a. MATERIAL - 14 GA. S/S.
b. STD. - 1.05c.
c. STD. - 1.07
d. STD. - 1.10

CONTINUED ON STD.- 3.01.1

NYIKOS ASSOCIATES, INC. Food Facilities Design/Consulting	DESCRIPTION: SINKS AND DRAINBOARDS	STANDARD DTL: 3.01

NOT FOR BIDDING PURPOSES

e. DRAINBOARDS UP TO 24" IN LENGTH REQUIRE NO LEGS OR BRACES. DRAINBOARDS 25" TO 30" REQUIRE 1" O.D. 16 GA. S/S BRACE. DRAINBOARDS OVER 30" REQUIRE LEGS AND CHANNEL FRAMEWORK.

f. DRAINBOARDS SHALL PITCH TO SINK 1/8" PER FOOT OF LENGTH TO PROVIDE COMPLETE DRAINING WITHOUT POOLING. THE 3" HIGH RAISED ROLLED RIM AT THE SINK SHALL DECREASE IN HEIGHT TOWARD THE OUTER ENDS OF THE DRAINBOARD.

g. PARTITIONS BETWEEN COMPARTMENTS TO BE DOUBLE WALLED CONSTRUCTION WITH ROUNDED TOP, ALL WELDED INTEGRAL WITH SINK BODY.

h. BACK, BOTTOM, AND FRONT SHALL BE ONE CONTINUOUS PIECE WITH ENDS WELDED INTEGRAL, WITHOUT OVERLAPPING JOINTS OR OPEN SPACES, BETWEEN COMPARTMENTS.

i. WASTES SHALL BE SEATED IN DIE STAMPED DEPRESSIONS WITHOUT USE OF SOLDER, RIVETS OR WELDING. INSTALLED COMPONENTS SHALL BE FLUSH WITH SURROUNDING SURFACE.

j. EACH SINK COMPARTMENT TO BE PITCHED AND CREASED TO WASTE TO ASSURE COMPLETE DRAINING WITHOUT POOLING.

k. ENTIRE UNIT SHALL BE ALL WELDED COVE CORNERED CONSTRUCTION WITH VERTICAL AND HORIZONTAL AND INTERIOR CORNERS HAVING A 3/4" RADIUS.

l. STD.- 1.02 b EDGE.

m. STD. - 1.04a. BACKSPLASH.

n. UNDERSIDE OF DRAINBOARDS AND SINKS TO BE SPRAYED WITH SOUND DAMPENING IN COMPLIANCE WITH N.S.F. STD. 2 PARA 4.441 WHEN SPECIFIED.

o. FAUCETS - T&S MODEL B-232 WITH AERATOR B-199, REMOVABLE MONEL SEATS AND 1/2" I.P.S. MALE INLETS.

p. WASTES - 2" NICKEL PLATED BRONZE ROTARY HANDLE WASTE S/S STRAINER PLATE WITH CHROME WITH CHROME PLATED BRASS CONNECTED OVERFLOW, STANDARD- KIEL HARDWARE MFG. CO. #1770-1015-1000.

q. REAR CROSS BRACING ONLY.

r. OMIT FRONT AND REAR LENGTHWISE CROSSBRACIG UNDER SINKS.

s. 12 GAUGE STAINLESS STEEL 6"x 6" TRIANGULAR SUPPORT PLATE WELDED TO UNDERSIDE OF SINKS.

t. WIDTH AS SPECIFIED.

NYIKOS ASSOCIATES, INC. Food Facilities Design/Consulting	DESCRIPTION: SINK AND DRAINBOARDS	STANDARD DTL: 3.01.1

NOT FOR BIDDING PURPOSES

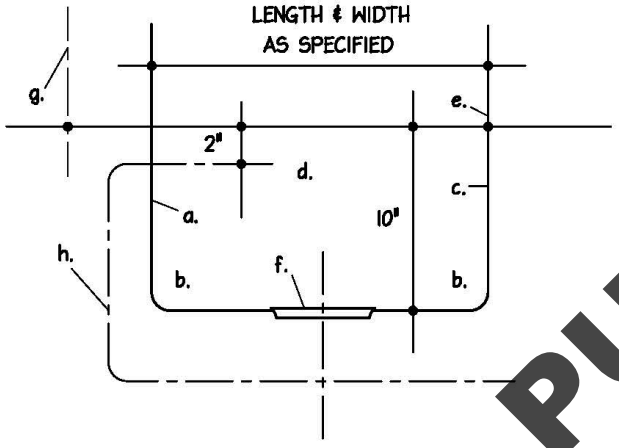

TYPICAL SECTION

a. MATERIAL - 14 GA. S/S

b. ENTIRE UNIT SHALL BE ALL WELDED COVE CORNERED CONSTRUCTION WITH VERTICAL AND HORIZONTAL AND INTERIOR CORNERS HAVING A 3/4" RADIUS.

c. TWO SIDES AND BOTTOM SHELL BE ONE CONTINUOUS PIECE WITH ENDS WELDED INTEGRAL WITHOUT OVERLAPPING JOINTS.

d. PARTITIONS BETWEEN COMPARTMENTS TO BE DOUBLE WALLED CONSTRUCTION WITH ROUNDED TOP, ALL WELDED INTEGRAL WITH SINK.

e. FULLY WELD SINK TO TOP WITHOUT OVERLAPPING JOINTS.

f. WASTES SHALL BE SEATED IN DIE STAMPED DEPRESSIONS WITHUOT USE OF SOLDER RIVETS OR WELDING . INSTALLED COMPONENTS SHALL BE FLUSH WITH SURROUNDING SURFACE.

g. FAUCET - T&S MODEL B-222 FAUCET WITH B-199 AERATOR, REMOVABLE MONEL SEATS AND 1/2" IPS MALE INLETS.

h. WASTES - 1-1/2" NICKEL PLATED BRONZE ROTARY HANDLE WASTE AND S/S STRAINER PLATE WITH CHROME PLATED BRASS CONNECTED OVERFLOW, STANDARD-KEIL HARDWARE COMPANY NO. #1770-1015-1000.

NYIKOS ASSOCIATES, INC. Food Facilities Design/Consulting	DESCRIPTION: COUNTER TOP SINKS	STANDARD DTL: 3.04

NOT FOR BIDDING PURPOSES

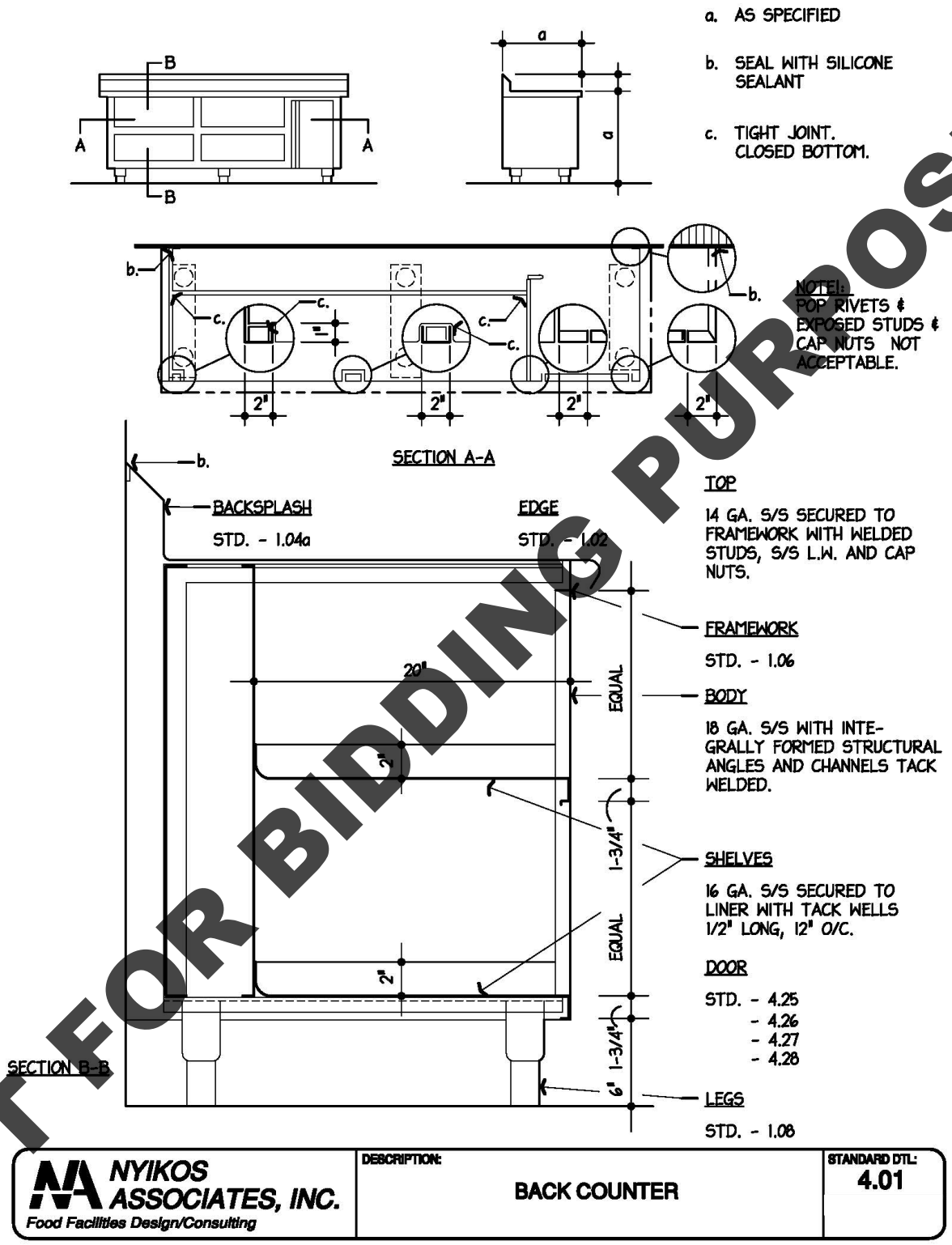

NOT FOR BIDDING PURPOSES

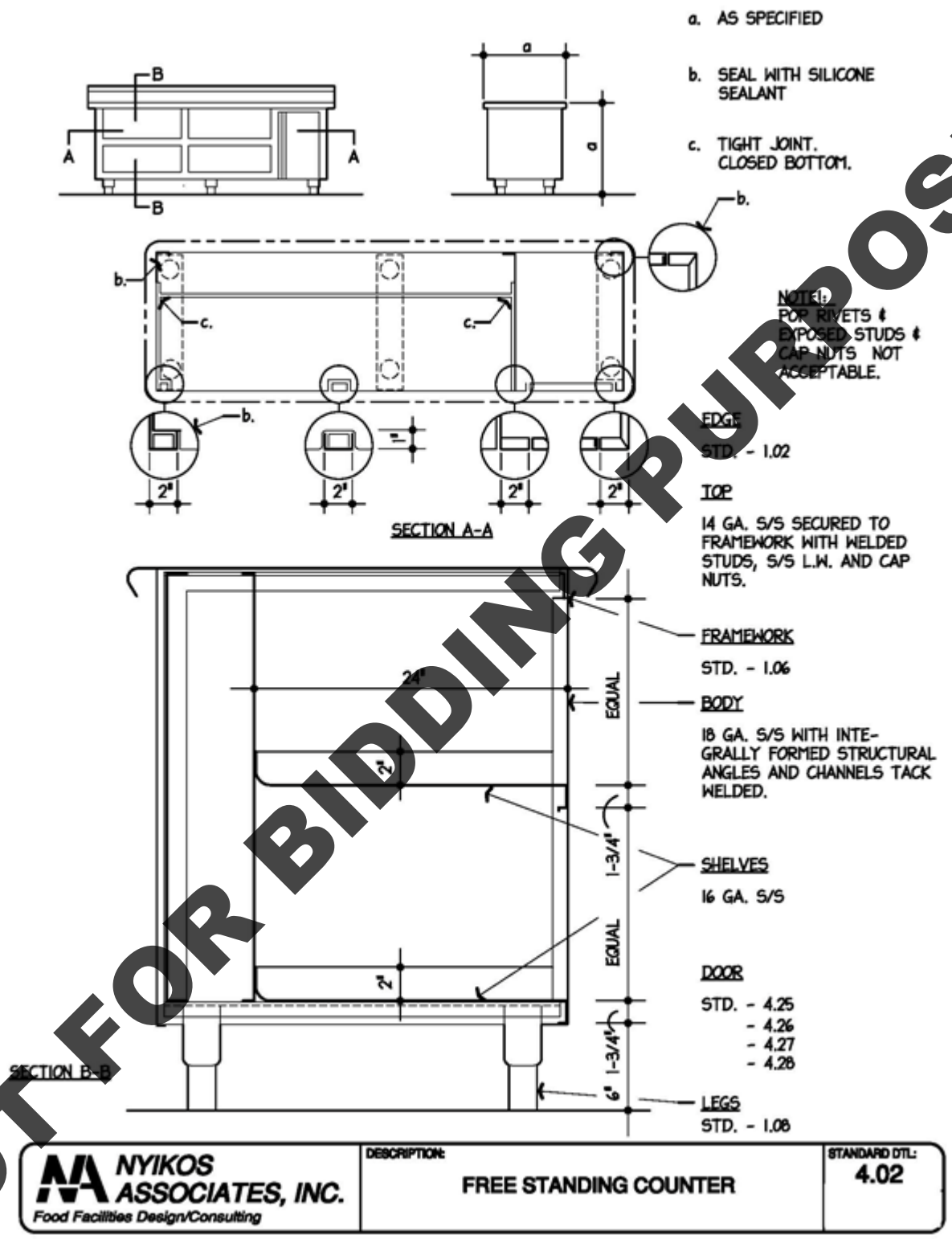

NOT FOR BIDDING PURPOSES

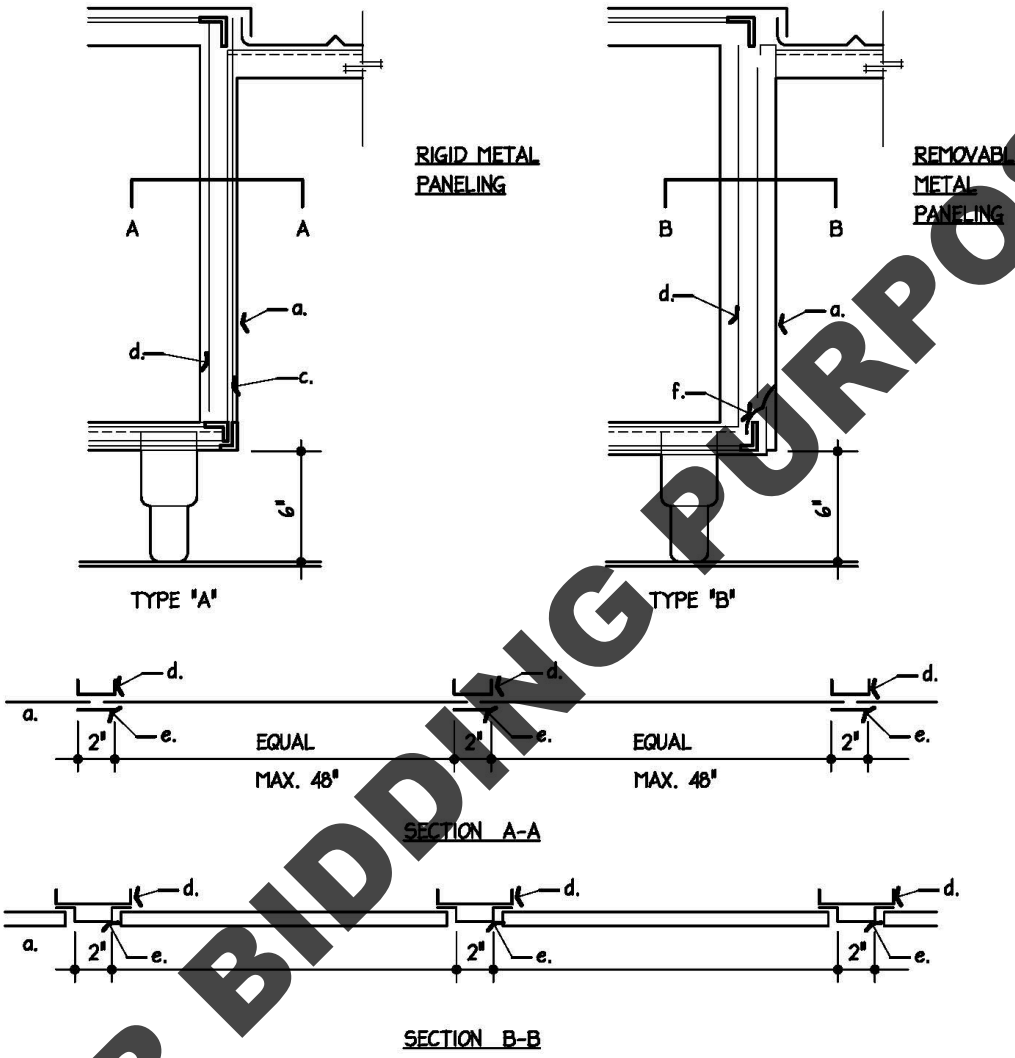

a. PANELING - 18 GA. S/S (18 GA. GALV. W/BONDED COVERING WHEN SPECIFIED).
b. 1"x2"x1" 14 GA. GALV. CHANNEL FULLY WELDED TO FRAMEWORK.
c. 2" 12 GA. S/S MULLIONS SECURED WITH WELDED STUDS, S/S LOCKWASHERS AND CAP NUTS.
d. 1"x4"x1" 14 GA. GALV. CHANNEL FULLY WELDED TO FRAMEWORK.
e. 1"x1"x2"x1"x1" 14 GA. S/S HAT CHANNEL (MULLIONS) SECURED WITH WELDED STUDS, S/S LOCKWASHERS AND CAP NUTS.
f. S/S CLIP.

NYIKOS ASSOCIATES, INC. Food Facilities Design/Consulting	DESCRIPTION: CAFETERIA COUNTER FRONT PANELING METAL	STANDARD DTL: 4.05

NOT FOR BIDDING PURPOSES

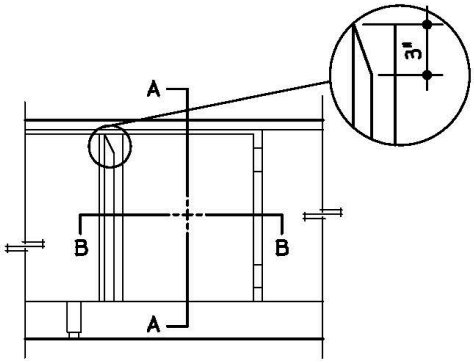

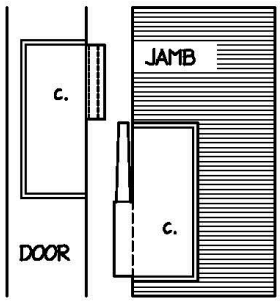

HINGE DETAIL

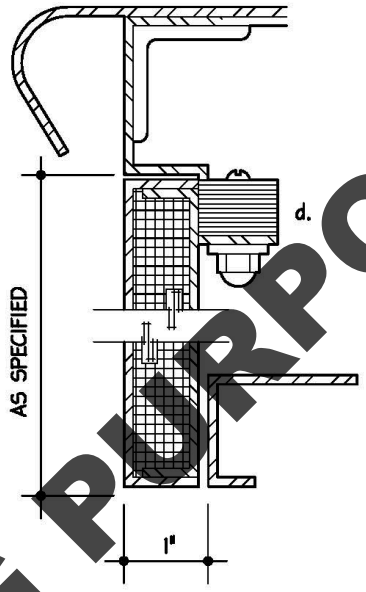

SECTION A-A

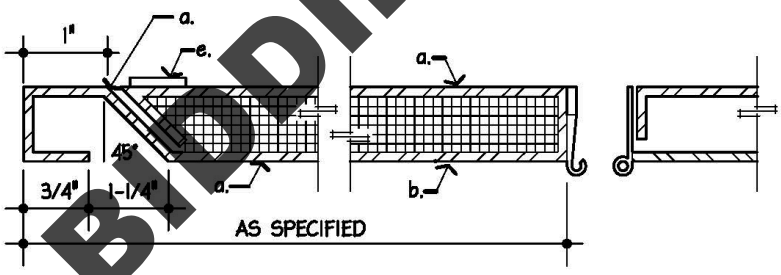

SECTION B-B

a. PANELING - 18 GA. S/S GA. EXTERIOR AND INTERIOR PANS TACK WELDED.
b. SEMI-RIGID FIBERGLASS SOUND DAMPENING.
c. HEAVY-DUTY S/S CLIP JOINT HINGE AS MFD. BY STANDARD-KEIL. SET IN FLUSH WITH SURFACE OF DOOR AND JAMB AND WELDED IN PLACE.
d. STANDARD-KEIL #2932-1010-3000 MAGNETIC CATCH MOUNTED FLUSH IN CUT OUT ON 1" TURN DOWN.
e. STEEL PLATE FOR MAGNETIC CATCH TACK WELDED TO INTERIOR DOOR PAN.

NYIKOS ASSOCIATES, INC. Food Facilities Design/Consulting	DESCRIPTION: HINGED SOLID DOOR	STANDARD DTL: 4.26

(END OF SECTION 114000)

NOT FOR BIDDING PURPOSES

SECTION 11 52 13

PROJECTION SCREENS

NOT FOR BIDDING PURPOSES

PART 1 - GENERAL

1.1 RELATED DOCUMENTS

A. Drawings and general provisions of the Contract, including General and Supplementary Conditions and Division 01 Specification Sections, apply to this Section.

1.2 SUMMARY

A. Section Includes:

1. Electrically operated, front-projection screens and controls.

1.3 DEFINITIONS

A. Gain of Front-Projection Screens: Ratio of light reflected from screen material to that reflected perpendicularly from a magnesium carbonate surface as determined per SMPTE RP 94.

1.4 ACTION SUBMITTALS

A. Product Data: For each type of product.

B. Shop Drawings: Show layouts and types of front-projection screens. Include the following:

1. Drop lengths.
2. Location of seams in viewing surfaces.
3. Location of screen centerline relative to ends of screen case.
4. Anchorage details, including connection to supporting structure for suspended units.
5. Details of juncture of exposed surfaces with adjacent finishes.
6. Location of wiring connections for electrically operated units.
7. Wiring diagrams for electrically operated units.
8. Accessories.

1.5 CLOSEOUT SUBMITTALS

A. Maintenance Data: For projection screens to include in maintenance manuals.

1.6 DELIVERY, STORAGE, AND HANDLING

A. Environmental Limitations: Do not deliver or install front-projection screens until spaces are enclosed and weathertight, wet work in spaces is complete and dry, and temporary HVAC system is operating and maintaining ambient temperature and humidity conditions at occupancy levels during the remainder of the construction period.

1.7 COORDINATION

A. Coordinate layout and installation of projection screens with adjacent construction, including ceiling framing, light fixtures, HVAC equipment, fire-suppression system, and partitions.

PART 2 - PRODUCTS

2.1 ELECTRICALLY OPERATED, FRONT-PROJECTION SCREENS

A. General: Manufacturer's standard units consisting of case, screen, motor, controls, mounting accessories, and other components necessary for a complete installation. Provide units that are listed and labeled as an assembly by UL or another testing and inspecting agency acceptable to authorities having jurisdiction.

1. Electrical Components, Devices, and Accessories: Listed and labeled as defined in NFPA 70, by a qualified testing agency, and marked for intended location and application.
2. Line Voltage Control: Remote, key-operated, 3-position control switch installed in recessed metal device box with flush cover plate.
3. End-Mounted Motor: Instant-reversing, gear-drive motor of size and capacity recommended by screen manufacturer; with permanently lubricated ball bearings, automatic thermal-overload protection, preset limit switches to automatically stop screen in up and down positions, and positive-stop action to prevent coasting. Locate motor in its own compartment.
4. Tab Tensioning: Units have stainless-steel tensioning cables on both sides of screen connected to edges of screen by tabs to pull screen flat horizontally.

B. Suspended, Electrically Operated Screens with Automatic Ceiling Closure, with Motor-in Roller, and with Tab Tensioning: Units designed and fabricated for suspended mounting; with bottom of case composed of two panels, fully enclosing screen, motor, and wiring; one panel hinged and designed to open and close automatically when screen is lowered and fully raised, the other removable or openable for access to interior of case.

1. Basis of Design Product: Subject to compliance with requirements, provide product by Da-Lite Screen Company, or comparable product by one of the following:

a. Draper Inc.
b. Stewart Filmscreen Corporation.

2. Provide metal or metal-lined motor enclosure on units with end-mounted motor.
3. Screen Case: Made from metal, wood, wood products, and fire-retardant materials.
4. Provide screen case constructed to be installed with underside flush with ceiling.
5. Prime paint surfaces of screen case that will be exposed to view in the finished work.
6. Screen Mounting: Bulkhead recessed. Include mounting hardware.

2.2 FRONT-PROJECTION SCREEN MATERIAL

A. Matte-White Viewing Surface: Peak gain of 0.9 to 1.0, and gain of not less than 0.8 at an angle of 50 degrees from the axis of the screen surface.

1. Available Products:

NOT FOR BIDDING PURPOSES

a. Da-Lite Screen Co., Inc.; Matte White.
b. Draper Inc. Fiberglass Matte White.

B. Material: Vinyl-coated, glass-fiber fabric; black backed.

C. Mildew-Resistance Rating: Zero or 1 when tested according to ASTM G 21.

D. Flame Resistance: Passes NFPA 701.

E. Seamless Construction: Provide screens, in sizes indicated, without seams.

F. Edge Treatment: Black masking borders.

G. Size of Viewing Surface: 123 by 164 inches; 210 inches diagonal

H. Provide 12 inches extra drop length at top of screen.

1. Color: Black.

PART 3 - EXECUTION

3.1 INSTALLATION

A. Install front-projection screens at locations indicated to comply with screen manufacturer's written instructions.

B. Install front-projection screens with screen cases in position and in relation to adjoining construction indicated. Securely anchor to supporting substrate in a manner that produces a smoothly operating screen with vertical edges plumb and viewing surface flat when screen is lowered.

1. Install low-voltage controls according to NFPA 70 and manufacturer's written instructions.

a. Wiring Method: Install wiring in raceway except in accessible ceiling spaces and in gypsum board partitions where unenclosed wiring method may be used. Use UL-listed plenum cable in environmental air spaces, including plenum ceilings. Conceal raceway and cables except in unfinished spaces.

2. Test electrically operated units to verify that screen controls, limit switches, closure, and other operating components are in optimum functioning condition.

END OF SECTION 11 52 13

NOT FOR BIDDING PURPOSES

THIS PAGE INTENTIONALLY LEFT BLANK

NOT FOR BIDDING PURPOSES

NOT FOR BIDDING PURPOSES

SECTION 11 61 43

STAGE CURTAINS

PART 1 - GENERAL

1.1 RELATED DOCUMENTS

A. Drawings and general provisions of the Contract, including General and Supplementary Conditions and Division 01 Specification Sections, apply to this Section.

1.2 SUMMARY

A. Section Includes:

1. Stage curtains, scrims, and drops.
2. Draw-curtain tracks.
3. Curtain rigging.

1.3 PREINSTALLATION MEETINGS

A. Preinstallation Conference: Conduct conference at Project site.

1.4 ACTION SUBMITTALS

A. Product Data: For each type of product and the following:

1. Draw-Curtain Machines: Include rated capacities, operating characteristics, and electrical characteristics.
2. Tracks: Capability of each track to support the weight and operation of curtains that it supports.

B. Shop Drawings: For each installation and for special components not dimensioned or detailed in manufacturer's product data.

1. Include plans, elevations, sections, and attachment details of curtains.
2. Include fabric assembly and hanging details.
3. Dimension operating clearances.
4. Include documentation of capacity of each batten, track, attachment, and rigging component to support loads.
5. Locations of equipment components, switches, and controls. Differentiate between manufacturer-installed and field-installed wiring.
6. Wiring Diagrams: For power, signal, and control wiring.

C. Samples for Initial Selection: For each type of stage curtain indicated. Include color charts showing full range of colors, textures, and patterns available, together with 12-inch-square Sample of each fabric type and seam.

1.5 INFORMATIONAL SUBMITTALS

A. Coordination Drawings: Reflected ceiling plans and other details, drawn to scale, on which the following items are shown and coordinated with each other, using input from installers of the items involved:

1. Structural members to which tracks, battens, and other stage-curtain equipment will be attached.
2. Locations of lighting fixtures and cabling, ductwork, piping, and sprinklers.
3. Rigging equipment for stage equipment.
4. Access panels.

B. Qualification Data: For Installer.

C. Product Certificates: For the following, from manufacturer:

1. Fabric: Provide name of flame-retardant chemical used, identification of applicator, treatment method, application date, allowable life span for treatment, and details of any restrictions and limitations.
2. Rigging: Compliance of suspended battens and tracks with requirements.

D. Sample Warranty: For manufacturer's special warranty.

1.6 CLOSEOUT SUBMITTALS

A. Operation and Maintenance Data: For stage curtains and rigging to include in operation and maintenance manuals.

1.7 QUALITY ASSURANCE

A. Installer Qualifications: Manufacturer of stage curtains.

1.8 FIELD CONDITIONS

A. Environmental Limitations: Do not install stage curtains until spaces are enclosed and weathertight, wet work in spaces is complete and dry, work at and above ceilings is complete, and ambient temperature and humidity conditions are maintained at the levels indicated for Project when occupied for its intended use.

B. Field Measurements: Verify locations of supporting structural elements and construction contiguous with stage curtains and rigging by field measurements before fabrication and indicate measurements on Shop Drawings.

1.9 WARRANTY

A. Manufacturer's Special Warranty: Manufacturer agrees to repair or replace components of stage-curtain systems that fail in materials or workmanship within specified warranty period.

1. Failures include, but are not limited to, faulty operation of rigging.
2. Warranty Period: Two years from date of Substantial Completion.

NOT FOR BIDDING PURPOSES

PART 2 - PRODUCTS

2.1 STAGE-CURTAIN SYSTEMS

A. Description: Complete stage-curtain systems, including stage curtains, tracks, draw-curtain machines, and rigging; with necessary accessories for support and operation.

1. Manufacturers: Subject to compliance with requirements, available manufacturers offering products that may be incorporated into the Work include, but are not limited to the following:

a. Janson Industries; (800) 548-8982.
b. J. R. Clancy Company; (800) 836-1885.
c. Pittsburgh Stage, Inc; (412) 534-4500.
d. Melfabco, Inc; (866) 635-3222.
e. Frankel Associates; (800) 221-4670.
f. Valley Forge Fabrics, Inc; (954) 971-1776.
g. Automatic Device Company; (800) 360-2321.
h. H & H Specialties Inc; (800) 221-9995.

B. Source Limitations: Obtain stage-curtain systems from single manufacturer. Obtain each color, grade, finish, type, and variety of fabric from single source with resources to provide materials of consistent quality in appearance and physical properties.

2.2 PERFORMANCE REQUIREMENTS

A. Fire-Test-Response Characteristics: Provide stage curtains meeting the following requirements as determined by testing identical products by UL or another testing and inspecting agency acceptable to authorities having jurisdiction.

1. Flame-Propagation Resistance: Passes NFPA 701.

a. Permanently attach label to each fabric of curtain assembly indicating whether fabric is inherently and permanently flame resistant or is treated with flame-retardant chemicals and whether it requires retreatment after cleaning or after a designated time period of use.
b. Permanently attach 12-inch-square swatch of same fabric and dye lot for each fabric of a curtain assembly to the back of assembly for use as fire-resistance test strip.

B. Electrical Components, Devices, and Accessories: Listed and labeled as defined in NFPA 70, by a qualified testing agency, and marked for intended location and application.

2.3 CURTAIN FABRICS

A. General: Provide fabrics inherently and permanently flame resistant or chemically flame resistant by immersion treatment according to performance requirements indicated. Provide fabrics of each type and color from same dye lot.

B. Synthetic Boucle: Rough-textured woven fabric of synthetic boucle yarn; blend of modacrylic fibers, monofilament, rayon, and other synthetic fibers; permanently and inherently flameresistant; 48" minimum width, and other characteristics as follows:

NOT FOR BIDDING PURPOSES

1. Heavy Weight: Fabric weighing not less than 14 oz per linear yard.
2. Products: Subject to compliance with requirements, provide one of the following heavy weight boucle fabrics:

   a. “Bolero Boucle #202"; Frankel Associates.
   b. “Vegas”; Melfabco.
   c. “Reno”; Valley Forge Fabrics

C. Front Curtain Color: Refer to Section 090600.

D. Front Curtain Lining: Gramercy Verel of same fiber type as face fabric.

E. Cyclorama Curtain: Plain-woven heavy weight fabric of 100 percent cotton with raised, rounded chevron ribs running from selvage to selvage; 48-inch minimum width, 12 oz or more per lineal yard.

1. Products: Subject to compliance with requirements, provide one of the following cotton repp fabrics:

   a. “Nassau Chevron”; Frankel Associates.
   b. “Atlas Oxford”; Melfabco.
   c. “Atlas Oxford”; Valley Forge Fabrics LINING

2.4 CURTAIN FABRICATION

A. General: Provide not less than 50 percent additional fullness for curtains, unless otherwise indicated. Horizontal seams and fabric less than half-width are not permitted.

1. Vertical Hems: Provide vertical hems not less than 3 inches wide, double-stitched and machine-sewn with no selvage material visible from front of curtain.
2. Turnbacks: Provide turnbacks, formed by folding 24 inches of face fabric back at each end of panels and securing by sewing across top hem and grommeting through both layers of fabric. Do not sew turnbacks vertically.
3. Top Hems: Reinforce top hems by double-stitching 3-1/2 inches wide heavy jute webbing to top edge with minimum 1 inch of face fabric turned under.
4. Pleats: Provide fullness in curtains with round pleats formed by grommeting. Provide not less than #2 brass grommets along top hem reinforcing, spaced so that 6 inches of material can be gathered into pleat every 12 inches, by means of Gerwin #42 “S” hooks. Sewn-in pleats may be provided.

   a. Arrange vertical seams of valances and borders so that they fall within pleats.

5. Bottom Hems: Except for curtains which hang to floor, provide bottom hems not less than 6 inches deep. For floor-length curtains, provide 6-inch hems with separate interior heavy canvas chain pockets equipped with No. 8 cadmium-plated jack chain. Stitch chain pocket so chain rides 2 inches above bottom edge of curtain.

6. Lining: Provide lining for each curtain in same fullness as face fabric, and finished 2 inches shorter than face fabric. Unless otherwise specified, provide lining constructed of same fiber type as face fabric. Attach lining to face fabric along bottom line at seams with 4 inches long strips of heavy woven cotton tape.

B. Front Setting:

1. Valance: Fabricate valance of heavy weight Synthetic Boucle.

NOT FOR BIDDING PURPOSES

2. Front Curtain: Fabricate front curtain of heavy weight Synthetic Boucle with 24-inch turnbacks at each end of both panels.

C. Borders and Legs: Fabricate border and leg curtains of cotton repp.

D. Rear Curtain: Fabricate rear curtain of cotton repp.

2.5 CURTAIN TRACK

A. Straight Curtain Tracks:

1. Steel Tracks, General: Fabricate of not less than 0.075-inch (14 gauge) nominal thickness galvanized roll-formed steel, with continuous bottom slot, and with each half of track in one continuous piece.
2. Medium Duty Track: Equip track with adjustable pulley blocks containing sleeve-bearing wheels adequately guarded. Provide curtain carrier of plated or rust-proof steel with pair of polyethylene wheels fastened parallel to body by rust-proof steel rivet. Equip carriers with swivel eye for attachment of curtain snap or "S" hook. Provide end stops for track and adjustable floor block for maintaining proper tension on 1/4-inch stretch-resistant operating line of braided polypropylene or fiberglass center cord. Equip carriers with back pack guide accessory to permit offstage curtain folding.
3. Products: Subject to compliance with requirements, provide one of the following:

   a. Atlas Silk Model No. 101; H&H Specialties.
   b. Besteel Model No. 170; Automatic Devices.
   c. Model No. 731; J.R. Clancy.
   d. Model No. 330 RP; Janson Industries

B. Curved Curtain Tracks:

1. Aluminum Tracks, General: Fabricate of not less than nominal thickness (14 gage) extruded aluminum, with each half of track in one continuous piece. Provide curtain carriers for track spaced at 12-inch o.c.
2. Fabricate curved curtain tracks for walk-along operation without cord or pulleys, designed for rigid attachment to ceiling or hanging clamps. Fabricate track of nominal thickness 11gage extruded aluminum in I-beam configuration, with intermediate flange. Provide carriers spaced at 12-inch o.c. and constructed of two nylon wheels fastened parallel to zinc-plated steel body by steel rivet, with rubber or neoprene bumpers. Equip carriers with heavy-duty swivel eye for attachment of curtain snap or "S" hook.
3. Shop fabricate curved portions of track in accordance with approved shop drawings.
4. Products: Subject to compliance with requirements, provide one of the following:

   a. Atlas Silk Model No. 301; H&H Specialties.
   b. Rig-I-Flex Model No. 142; Automatic Devices.
   c. Model No. 142; J.R. Clancy.
   d. Model No. 380C; Janson Industries

2.6 MISCELLANEOUS

A. Provide all necessary pipe battens, rigging, supports, winches, counterweights and other mechanisms for items identified on the Electrical Drawings for lighting. Coordinate with the Electrical Contractor.

NOT FOR BIDDING PURPOSES

2.7 CURTAIN RIGGING

A. Battens: Fabricated from steel pipe with a minimum number of joints. Connect pipe at joints with a drive-fit pipe sleeve not less than 18 inches long, and secure with four flush rivets, plug welds, threaded couplings, or another equally strong method.

1. Steel Pipe: ASTM A 53/A 53M, Grade A, standard weight (Schedule 40), black, NPS 11/2 nominal diameter unless otherwise indicated.
2. Finish: Shop painted black, with a 1-inch-wide yellow stripe at center of each batten.

B. Galvanized Steel Sheet: Zinc-coated carbon steel sheet of commercial quality, complying with ASTM A526, G60 zinc, coating; 0.075 inch (14 gage) minimum nominal thickness.

C. Aluminum: Alloy and temper recommended by manufacturer for strength and corrosion resistance, mill finish, ASTM B221 for extrusions

D. Supports, Clamps, and Anchors: ASTM A 153/A 153M, Class B, galvanized sheet steel in manufacturer's standard thicknesses, galvanized after fabrication.

E. Trim and Support Chain: ASTM A 391/A 391M, Grade 80, hardened alloy steel chain rated for overhead lifting.

F. Inserts, Bolts, Rivets, and Fasteners: Manufacturer's standard corrosion-resistant units.

PART 3 - EXECUTION

3.1 EXAMINATION

A. Examine areas and conditions, with Installer present, for compliance with requirements for supporting members, blocking, installation tolerances, clearances, and other conditions affecting performance of stage-curtain work.

B. Examine inserts, clips, blocking, or other supports required to be installed by others to support tracks and battens.

C. Proceed with installation only after unsatisfactory conditions have been corrected.

3.2 INSTALLATION, GENERAL

A. Install stage-curtain system according to curtain and track manufacturer's written instructions.

B. Use anchoring devices to suit conditions and substrate materials encountered.

C. Set items plumb and square, securely anchored to building structure.

D. Insulate to prevent electrolysis between dissimilar metals.

E. Field-weld joints in steel work, without open seams. Grind smooth and polish to match adjacent surfaces.

F. Field touch-up blemishes to original finish.

NOT FOR BIDDING PURPOSES

3.3 BATTEN INSTALLATION

A. Install battens by suspending at heights indicated with trim and supports spaced to support load, except do not exceed 10 feet between supports.

B. Secure chains either directly to structures or to inserts, eye screws, or other devices which are secure and appropriate to substrate, and which will not deteriorate or fail with age or elevated temperatures.

C. Close ends of pipe batten units by welding and grinding smooth

3.4 TRACK INSTALLATION

A. Ceiling-Mounted Track: Drill track at intervals not greater than manufacturer's written instructions for spacing, and fasten directly to structure.

B. Wall-Mounted Track: Install track by suspending from brackets securely mounted to wall construction at track-support spacing, according to manufacturer's written instructions.

C. Batten-Hung Track: Install track by suspending from pipe batten with manufacturer's track clamp hangers attached to batten pipe clamps at track-support spacing, according to manufacturer's written instructions.

D. Track-Support Spacing: According to manufacturer's recommendations for applied loads, but not exceeding the following dimensions between supports:

1. Heavy-Duty Track: Do not exceed 7 feet between supports.
2. Medium-Duty Track: Do not exceed 6 feet between supports.
3. Curved Walk-Along Track: Do not exceed 4 feet between supports, and provide additional supports at curves and splices.

E. Install track for center-parting curtains with not less than 24-inch overlap of track sections at center, supported by track lap clamps.

3.5 CURTAIN INSTALLATION

A. Track Hung: Secure curtains to track carriers with track manufacturer’s special heavy-duty Shooks or snap hooks.

B. Batten Hung: Secure curtains to pipe battens with minimum 1/8-inch-wide by 24 inches long braided soft cotton tie lines.

C. Adjust hardware, fixtures, and other moving or operating parts to function smoothly. The completed Work shall be leveled, tested and left ready for use.

3.6 PROTECTION OF FINISHED WORK

A. Do not permit finished work to be exposed to continued construction activity.

NOT FOR BIDDING PURPOSES

3.7 CURTAIN SCHEDULE

A. The Stage Equipment included in this Section of the Specifications shall consist of items specified and/or indicated the Drawings. The Stage Equipment items shall be supported from system of parallel pipe battens, and stage curtain tracks. Hardware shall be fastened to pipe battens by means of pipe clamps or trim chains.

B. Size given are track size, provide fullness and turnbacks as indicated.

1. Front Valance: 30'-0" wide x 2'-0" drop.

a. Tie valance to pipe batten.

3. Front Curtain and #170 Bi-parting Track: Each half, 17'-0" wide and 14'-0" high.
4. Back Curtain and #170 Bi-Parting Track: Each half 17’0” wide and 13’0” high.
5. Side Curtains: Each 15'-0" wide x 13'-0" high.

END OF SECTION 11 61 43

NOT FOR BIDDING PURPOSES

SECTION 11 66 23

GYMNASIUM EQUIPMENT

NOT FOR BIDDING PURPOSES

PART 1 - GENERAL

1.1 RELATED DOCUMENTS

A. Drawings and general provisions of the Contract, including General and Supplementary Conditions and Division 01 Specification Sections, apply to this Section.

1.2 SUMMARY

A. This Section includes the following gymnasium equipment:

1. Basketball equipment.
2. Volleyball equipment.
3. Exercise equipment.
4. Safety pads.

B. Related Sections include the following:

1. Division 03 Section "Cast-in-Place Concrete" for installation of floor insert sleeves to be cast in concrete slabs and footings.
2. Division 26 Sections for electrical service for motor operators, controls, and other powered devices for motorized gymnasium equipment.

1.3 DEFINITIONS

A. FIBA: International Basketball Federation (Federation Internationale de Basketball Amateur).

B. FIVB: International Volleyball Federation (Federation Internationale de Volleyball).

C. NAGWS: The National Association for Girls and Women in Sport.

D. NCAA: The National Collegiate Athletic Association.

E. NFHS: The National Federation of State High School Associations.

F. USAV: USA Volleyball.

1.4 SUBMITTALS

A. Product Data: For each type of product indicated.

1. If applicable, include assembly, disassembly, and storage instructions for removable equipment.
2. Motors: Show nameplate data, ratings, characteristics, and mounting arrangements.

B. Shop Drawings: For gymnasium equipment. Include plans, elevations, sections, details, attachments to other work, and the following:

1. Method of field assembly for removable equipment, connections, installation details, mountings, floor inserts, attachments to other work, and operational clearances.
2. Transport and storage accessories for removable equipment.

C. Structural analysis data signed and sealed by the qualified professional engineer responsible for their preparation including loads, point reactions, and locations for attachment of gymnasium equipment to structure.

D. Coordination Drawings: Court layout plans, drawn to scale, and coordinating floor inserts, game lines, and markers applied to finished flooring.

E. Samples for Initial Selection: For each type of gymnasium equipment indicated.

F. Samples for Verification: For the following products:
1. Pad Fabric: Not less than 3 inches (76 mm) square, with specified treatments applied. Mark face of material.

G. Product Certificates: For each type of gymnasium equipment, signed by product manufacturer.

H. Qualification Data: For Installer.

I. Operation and Maintenance Data: For gymnasium equipment to include in emergency, operation, and maintenance manuals.

J. Warranty: Special warranty specified in this Section.

1.5 QUALITY ASSURANCE

A. Installer Qualifications: An employer of workers trained and approved by manufacturer.

B. Source Limitations: Obtain each type of gymnasium equipment through one source from a single manufacturer.

C. Electrical Components, Devices, and Accessories: Listed and labeled as defined in NFPA 70, Article 100, by a testing agency acceptable to authorities having jurisdiction, and marked for intended use.

1.6 PROJECT CONDITIONS

A. Environmental Limitations: Do not install gymnasium equipment until spaces are enclosed and weatherproof, wet work in spaces is complete and dry, and ambient temperature and humidity conditions are maintained at the levels indicated for Project when occupied for its intended use.

NOT FOR BIDDING PURPOSES

B. Field Measurements: Verify position and elevation of floor inserts and layout for gymnasium equipment.

1.7 COORDINATION

A. Coordinate installation of floor inserts with structural floors and finish flooring installation and with court layout and game lines and markers on finish flooring.

B. Coordinate layout and installation of overhead-supported gymnasium equipment and suspension system components with other construction including light fixtures, HVAC equipment, fire-suppression-system components, and partition assemblies.

1.8 WARRANTY

A. Special Warranty: Manufacturer's standard form in which manufacturer agrees to repair or replace components of gymnasium equipment that fail in materials or workmanship within specified warranty period.

1. Warranty Period: Five years from date of Substantial Completion.

PART 2 - PRODUCTS

2.1 MATERIALS

A. Aluminum: Alloy and temper recommended by manufacturer for type of use and finish indicated.

1. Extruded Bars, Profiles, and Tubes: ASTM B 221 (ASTM B 221M).
2. Cast Aluminum: ASTM B 179.
3. Flat Sheet: ASTM B 209 (ASTM B 209M).

B. Steel: Comply with the following:

1. Steel Plates, Shapes, and Bars: ASTM A 36/A 36M.
2. Steel Tubing: ASTM A 500 or ASTM A 513, cold formed.
3. Steel Sheet: ASTM A 1011/A 1011M.

C. Support Cable: Manufacturer's standard galvanized steel aircraft cable. Provide fittings complying with cable manufacturer's written instructions for size, number, and method of installation.

D. Castings and Hangers: Malleable iron, ASTM A 47/A 47M, grade required for structural loading.

E. Softwood Plywood: DOC PS 1, exterior.

F. Anchors, Fasteners, Fittings and Hardware: Manufacturer's standard corrosion-resistant or noncorrodible units; concealed [; tamperproof, vandal- and theft-resistant design].

NOT FOR BIDDING PURPOSES

G. Grout: Nonshrink, nonmetallic, premixed, factory-packaged, nonstaining, noncorrosive, nongaseous grout complying with ASTM C 1107 with minimum strength recommended in writing by gymnasium equipment manufacturer.

2.2 BASKETBALL EQUIPMENT

A. Available Manufacturers: Subject to compliance with requirements, manufacturers offering products that may be incorporated into the Work include, but are not limited to, the following:

B. Manufacturers: Subject to compliance with requirements, provide products by one of the following:

C. Manufacturers: Subject to compliance with requirements, provide products by one of the following:

1. Porter Athletic Equipment Company; No 90949-000
2. Draper, Inc; EZ Fold TF-20

D. Protruding fasteners or exposed bolt heads on front face of backboards are not permitted.

E. Overhead-Supported Backboard:
1. Folding Type: Provide manufacturer's standard assembly for forward-folding, front-braced backboard, with hardware and fittings to permit folding.
2. Framing: Steel pipe, tubing, and shapes. Design framing to minimize vibration during play.

   a. Center-Mast Frame: Welded with side sway bracing.
   b. Finish: Manufacturer's standard powder-coat finish.

3. Goal Height Adjuster: Adjustable from 8 to 10 feet (2.4 to 3 m) with gear-drive mechanism, locking in any position within adjustment range, with visible height scale attached to side of framing.

   a. Operation: Manual with detachable crank handle.
   b. Operation: Electric with integral gear-drive motor, with limit switches preset to goal heights, and one detachable electric control device(s).

F. Backboard Safety Device: Designed to limit free fall if support cable, support chain, pulleys, fittings, winch, or related components fail; with mechanical automatic reset; 6000-lb (2722-kg) load capacity; one per folding backboard.

G. Winch: Hoist, consisting of heavy-duty, fully enclosed worm-gear, brake, cable drum, cable, and fittings, for mounting on [wall with equipment mounting board] <Insert mounting>; designed to move and hold backboard in any raised or lowered position.

H. Backboard Electric Operator: Provide operating machine of size and capacity recommended by manufacturer for equipment specified, with electric motor and factory-prewired motor controls, starter, gear-reduction unit, and remote controls. Coordinate wiring requirements and electrical characteristics with building electrical system.

NOT FOR BIDDING PURPOSES

1. Operator Type: Cable drum with grooved drum and cable tension device to automatically take up cable slack and retain cable in grooves.
2. Operator Mounting: Wall-mounting board
3. Motor Characteristics: Sufficient to start, accelerate, reverse, and operate connected loads at designated speeds within installed environment and with indicated operating sequence, and without exceeding nameplate rating or considering service factor. Comply with NEMA MG 1, and the following:
4. Voltage: NEMA standard voltage selected to operate on nominal circuit voltage to which motor is connected.

5. Limit Switches: Adjustable switches, interlocked with motor controls and set to automatically stop basketball equipment at fully retracted and fully lowered positions.

I. Basketball Backboard:

1. Shape and Size:

a. Rectangular, 72 by 42 inches (1800 by 1050 mm) width by height.

2. Backboard Material: With predrilled holes or preset inserts for mounting goals, and as follows:
a. Glass: Not less than 1/2-inch- (13-mm-) thick, transparent tempered glass. Provide glass with impact-absorbing resilient rubber or PVC gasket around perimeter in a fully welded, brushed-natural-finish, extruded-aluminum frame, with steel subframe, reinforcement, and bracing, and with mounting slots for mounting backboard frame to backboard support framing.

1) Standard Mount: Provide steel corner reinforcement with mounting slots for mounting backboard frame to backboard support framing at standard mounting centers.
2) Rim-Restraining Device: Complying with NCAA and NFHS rules and designed to ensure that basket remains attached if glass backboard breaks.

3. Target Area and Border Markings: Permanently etched in white color, marked in manufacturer's standard pattern and stripe width.
4. Finish: Manufacturer's standard factory-applied, white background.

J. Goal Mounting Assembly: Compatible with goal, backboard, and support framing; with hole pattern that is manufacturer's standard for goal attachment.

K. Basketball Goals: Complete with flanges, braces, attachment plate, and evenly spaced loops welded around underside of ring.

1. Single-Rim Basket Ring Competition Goal: Materials, dimensions, and fabrication per manufacturer's standard design.
2. Finish: Manufacturer's standard finish.

L. Basketball Nets: 12-loop-mesh net, between 15 and 18 inches (400 to 450 mm) long, sized to fit rim diameter.

NOT FOR BIDDING PURPOSES

M. Backboard Safety Pads: Designed for backboard thickness indicated and extending continuously along bottom and up sides of backboard and over goal mounting and backboard supports as per manufacturer's standard design.

1. Attachment: Manufacturer's standard
2. Color: As selected by Architect from manufacturer's full range.

2.3 VOLLEYBALL EQUIPMENT

A. Manufacturers: Subject to compliance with requirements, provide products by one of the following:
1. Draper Inc.; Volleyball System, No. PVS 500001
2. Porter Athletic Equipment Company; Powr-Trak Universal Sleeve-Type Volleyball standards, No. 01951-000

B. Floor Insert: Solid-brass floor plate; and steel pipe sleeve, concealed by floor plate, with capped bottom end, sized with ID to fit post standards, not less than 9 inches (230 mm) long to securely anchor pipe sleeve; with anchors designed for securing floor insert to floor substrate indicated.

1. Floor Plate: Manufacturer's standard hinged access cover, designed to be flush with adjacent flooring. (Base Bid)

2. Floor Plate: Lockable swivel access cover, designed for use with floating wood floors (alternate) and to be flush with adjacent flooring.

3. Provide two tools for unlocking access covers.

C. Net:
1. Draper Inc.; Volleyball System, No. PVS 500001
2. Porter Athletic Equipment Company; No. 02255-000 with boundary marker

D. Net Tensioning System: Designed to adjust and hold tension of net. Fully enclosed, nonslip manufacturer's standard type winch with cable length and fittings for connecting to net lines, positive-release mechanism, and manufacturer's standard handle. Provide end post with post top pulley. Provide opposing post with welded steel loops, hooks, pins, or other devices for net attachment and post top grooved line guide.

E. Safety Pads: :
1. Draper Inc.; 5011XX
2. Porter Athletic Equipment Company; No. 00717-003

F. Storage Cart: Manufacturer's standard wheeled unit designed for transporting and storing volleyball equipment and passing through 36-inch- (910-mm-) wide or wider door openings. Fabricate units of welded steel tubing with heavy-duty casters, including not less than two swivel casters. Fabricate wheels from materials that will not damage or mark floors; number of units as required to provide transport and storage for specified equipment.

NOT FOR BIDDING PURPOSES

2.4 EXERCISE EQUIPMENT

A. Manufacturers: Subject to compliance with requirements, provide products by one of the following:

1. Draper Inc.
2. Porter Athletic Equipment Company.

B. General: Manufacturer's standard equipment wall-mounting board(s).

C. Pull-up Bar: Wall mounted.

1. Fixed height.
2. Bar Length: Not less than 40 inches (1000 mm).
3. Bar: Not less than 1-1/16-inch- (27-mm-) diameter, round, plated solid-steel bar.
4. Support Frame: Steel-angle end brackets attached to wood stringers or steel channels or bars.
5. Bar Installation Height and Wall Clearance: As indicated at not less than 12 inches (300 mm) from wall.

2.5 SAFETY PADS

A. Manufacturers: Subject to compliance with requirements, provide products by one of the following:
1. Draper Inc.
2. Porter Athletic Equipment Company.

B. Safety Pad Surface-Burning Characteristics: ASTM E 84 by UL or another testing and inspecting agency acceptable to authorities having jurisdiction:

1. Flame-Spread Index: 25 or less.
2. Smoke-Developed Index: 450 or less.

C. Pad Coverings: Provide safety pad fabric covering fabricated from puncture- and tear-resistant, not less than 14-oz./sq. yd (475-g/sq. m) PVC-coated polyester or nylon-reinforced PVC fabric treated with fungicide for mildew resistance; with surface-burning characteristics indicated.

D. Wall Safety Pads: Padded wall wainscot panels designed to be attached in a continuous row; each panel section consisting of fill laminated to backer board with visible surfaces fully covered by seamless fabric covering, free of sag and wrinkles and firmly attached to back of backer board.

1. Backer Board: Not less than 3/8-inch- (9.5-mm-) thick plywood, mat formed, or composite panel.
2. Fill: Multiple-impact-resistant foam not less than 1-1/2-inch- (38-mm-) thick polyurethane, 3.5-lb/cu. ft. (56-kg/cu. m) density.
3. Size: Each panel section, as indicated.
4. Number of Panel Sections: As indicated.
5. Installation Method: Manufacturer's standard.

NOT FOR BIDDING PURPOSES

6. Fabric Covering Color(s): As selected by Architect from manufacturer's full range for one two color(s).

PART 3 - EXECUTION

3.1 EXAMINATION

A. Examine substrates, areas, and conditions, with Installer present, for compliance with requirements for play court layout, alignment of mounting substrates, installation tolerances, operational clearances, accurate locations of connections to building electrical system, and other conditions affecting performance.

1. Verify critical dimensions.
2. Examine supporting structure and subfloors and footings below finished floor.
3. Examine wall assemblies, where reinforced to receive anchors and fasteners, to verify that locations of concealed reinforcements have been clearly marked. Locate reinforcements and mark locations.
4. Proceed with installation only after unsatisfactory conditions have been corrected.

3.2 INSTALLATION, GENERAL

A. General: Comply with manufacturer's written installation instructions. Complete equipment field assembly, where required.

B. Unless otherwise indicated, install gymnasium equipment after other finishing operations, including painting, have been completed.

C. Permanently Placed Gymnasium Equipment and Components: Rigid, level, plumb, square, and true; anchored securely to supporting structure; positioned at locations and elevations indicated on Shop Drawings; in proper relation to adjacent construction; and aligned with court layout.

1. Floor Insert Location: Coordinate location with application of game lines and markers, and core drill floor for inserts after game lines have been applied.
2. Floor Insert Elevation: Coordinate installed heights of floor insert with installation and field finishing of finish flooring and type of floor plate.
3. Operating Gymnasium Equipment: Verify clearances for movable components of gymnasium equipment throughout entire range of operation and for access to operating components.

D. Floor Insert Setting: Position sleeve in oversized, recessed voids in concrete slabs and footings. Clean voids of debris. Fill void around sleeves with grout, mixed and placed to comply with grout manufacturer's written instructions. Protect portion of sleeve above subfloor and footing from splatter. Verify that sleeves are set plumb, aligned, and at correct height and spacing; hold in position during placement and finishing operations until grout is sufficiently cured. Set insert so top surface of completed unit is flush with finished flooring surface.

E. Safety Pads: Mount with bottom edge at 4 inches (102 mm) above finished floor.

NOT FOR BIDDING PURPOSES

F. Anchoring to In-Place Construction: Use anchors and fasteners where necessary for securing built-in and permanently placed gymnasium equipment to structural support and for properly transferring load to in-place construction.

G. Connections: Connect automatic operators to building electrical system.

H. Removable Gymnasium Equipment and Components: Assemble in place to verify that equipment and components are complete and in proper working order. Instruct Owner's designated personnel in properly handling, assembling, adjusting, disassembling, transporting, storing, and maintaining units. Disassemble removable gymnasium equipment after assembled configuration has been approved by Owner, and store units in location indicated on Drawings.

3.3 ADJUSTING

A. Adjust movable components of gymnasium equipment to operate safely, smoothly, easily, and quietly, free from binding, warp, distortion, nonalignment, misplacement, disruption, or malfunction, throughout entire operational range. Lubricate hardware and moving parts.

3.4 CLEANING

A. After completing gymnasium equipment installation, inspect components. Remove spots, dirt, and debris and touch up damaged shop-applied finishes according to manufacturer's written instructions.

B. Replace gymnasium equipment and finishes that cannot be cleaned and repaired, in a manner approved by Architect, before time of Substantial Completion.

3.5 DEMONSTRATION

A. Engage a factory-authorized service representative to train Owner's maintenance personnel to adjust, operate, and maintain gymnasium equipment. Refer to Division 01 Section "Demonstration and Training."

END OF SECTION 11 66 23

NOT FOR BIDDING PURPOSES

THIS PAGE INTENTIONALLY LEFT BLANK

NOT FOR BIDDING PURPOSES

SECTION 11 68 00

PLAY FIELD EQUIPMENT AND STRUCTURES

NOT FOR BIDDING PURPOSES

PART 1 - GENERAL

1.1 SCOPE

A. Furnish labor, material and equipment necessary for the provision and installation of the playground equipment, structure or modular unit as shown on the drawings and specified herein.

B. Work shall include but not limited to the following: excavation, layout, and the provision and installation of playground equipment, structure or modular unit in accordance with the manufacturer's installation instructions, including all appurtenances and accessories as required for a full and complete installation.

1.2 SUBMITTALS

A. Product Data: The Contractor shall submit within 90 calendar days after receipt of Notice to Proceed, complete sets of the material and equipment submittals, including:

1. Play equipment manufacturer and manufacturer's representative's name(s) and address(es);
2. Plan view drawings with model numbers, descriptive labels (including component names,) deck heights, and notations of compliance with CPSC, ASTM F1487-01 and ADA;
3. Detailed component list with model numbers and catalog descriptions;
4. Color chart;
5. Written material specifications for all components;
6. IPEMA certification certificate from the IPEMA website;
7. Copy of manufacturer's warranty in certificate format;
8. Copy of manufacturer's ISO 9001 Certification.

B. Approval of the submittals shall be the Contractor's authorization to order the required material and equipment. There will be no deviation from the approved submittals without the written authorization of the Owner's representative

1.3 PRODUCTS

A. Products: The layout shown in the plan view is based upon equipment and measurements from Miracle Recreation Equipment Company. Other products may be considered equal if all of the parameters, specifications and design intent of the drawings are met. Acceptable manufacturers include Miracle Recreation Equipment Company, Landscape Structures, Inc., or approved equivalent. Liberty Parks & Playgrounds, Inc. can be contacted at (877) 3767823 (Phone), (302) 659-5084 (Fax), or info@libertyparks.com (Email.)

B. Design and Fabrication: Playground equipment, structure or modular unit submitted for consideration shall be equivalent in design, layout, deck size, post size, clamping/fastening system, deck/slide/climber height, ADA accessibility, appearance, color and construction detail to playground equipment specified in the drawings. Reasonable variations in size/height (no more than +/-10%) and manufacturer's standard colors may be allowed at the Owner's discretion. Color schemes are to match as closely as possible to the originally specified colors. Play value and safety features of components must be equal or superior to specified design as judged by the Owner or Owner's representative.

C. Modification: Any expense of modification, adjustment or revision required to ensure compliance of furnished equipment to specified equipment and playground design shall be the sole expense and responsibility of the Contractor.

1.4 PLAYGOUND SAFETY STANDARDS AND QUALITY ASSURANCE

A. All products shall bear the certification seal of the International Play Equipment Manufacturers Association (IPEMA). All designs shall meet or exceed the Americans with Disabilities Act (ADA) "Final Accessibility Guidelines for Play Areas" regulations as published on October 18, 2000. All manufacturers must be ISO 9001 certified.

1.5 REFERENCES AND STANDARDS

A. ASTM: American Society for Testing and Materials

B. CPSC: Consumer Product Safety Commission

C. IPEMA: International Playground Equipment Manufacturers Association

D. ADA: Americans with Disabilities Act

E. ISO: International Organization for Standardization

F. CPSI: Certified Playground Safety Inspector

1.6 WARRANTY/GUARANTEE

A. The equipment manufacturer shall warrant material and workmanship against defects, from the date of manufacturer's invoice, for the period of time as follows:

1. LIMITED ONE HUNDRED (100) YEAR WARRANTY against structural failure due to weather corrosion or defects in materials and workmanship on aluminum deck posts, steel deck posts, clamping/fastening (Versalok®), and associated fastening hardware.
2. LIMITED FIFTEEN (15) YEAR WARRANTY against structural failure due to weather corrosion or defects in materials and workmanship on steel support legs and Mira-Therm™ II components on MEGA TOWER®, TOTS' CHOICE®, KIDS' CHOICE®, CENTER STAGE®, Nexus® and Boulder Ridge® Rock Wall; on playsystem steel components including railings, rungs, and rigid climbers, and Rockite®.
3. LIMITED ONE (1) YEAR WARRANTY against structural failure caused by defective materials or defective workmanship on TODDLERS' CHOICE® main support materials and decks.
4. LIMITED ONE (1) YEAR WARRANTY structural failure caused by defective materials or defective workmanship on Slashproof Seats and 360 degree Bucket Tot Seats for Swings.
5. LIMITED ONE (1) YEAR WARRANTY against structural failure due to defects in materials and workmanship for all products and components that are not specifically listed above, including, without limitation, all moving parts such as swing hangers, swivels, chains, whirls, trolleys and flexible climbers.
6. Repaired or replacement part(s) are only warranted for the balance of the original limited warranty.
7. These limited warranties do not include fading of colors, damage due to excessive wear and tear, vandalism, or negligence. These warranties are valid only if products are installed according to manufacturer's installation instructions.

NOT FOR BIDDING PURPOSES

PART 2 - MATERIALS

2.1 EQUIPMENT

A. See drawings for type, style, configuration, size and height of playground equipment, structure or modular unit to be provided.

B. See drawings for the color schedules of the various elements of playground equipment, structure or modular unit to be provided.

2.2 SPECIFICATIONS / COMPONENTS

A. Designs and specifications are based upon equipment from Miracle Recreation Equipment Company. Equivalents will be considered against this standard of quality and design and will be determined at the Owner's discretion.

B. Component list:

Qty	Model No.	Description
1	7147352	5" OD SINGLE POST SWG FRAME ONLY 2 SEATS REQ
2	7147352X	BAY EXTENSION FOR 5" OD SGL POST SWG FRAME
1	7147351HX	5" OD ADD-A-BAY 8' TR (1) THERA SEAT REQ MC
6	2840	SWG PART SLASH PROOF SEAT W/CHAIN (8' TR)
1	2740	SWG PART THERAPEUTIC SWG SEAT W/CHAIN (8' TR)
1	304	TEN SPIN
1	4561	TARANTULA CLIMBER
1	9451	SADDLE SEAT, ANGLED POST
1	9451	SADDLE SEAT, ANGLED POST
1	9451	SADDLE SEAT, ANGLED POST
1	71453459	CST 5' SQUARE DECK FOR ROOF
1	71497049	4' ARCH BRIDGE BETWEEN DECKS
2	714816W	FULL WAVE BARRIER, TUBE
1	71474959U	6'2" TYP SLIDE 405 DEG DOMED WAVE (5' DECK)
1	71485159	SQUARE TRANSFER POINT W/CLOSED HR (5' DECK)
1	7147285	BUMP & GLIDE SLIDE, ONE PIECE (5' DECK)
1	71452459	CST 5' SQUARE DECK
1	7149939	ADA STAIRS BTWN DECKS W/1'6" RISE
1	7145039	1/2 HEX FULL DECK (ATTACHES TO 4 POSTS)
4	714553	5" OD X 160" POST (5'6" TO 6'6" DECKS)
1	7147196	CLIFF CLIMBER (6'6" DECK)
1	714670M31	CHAM II TPRL SLIDE ENTRY/EXIT (5'-6'6" DK)
1	7146705	CHAMELEON II RIGHT SECTION
2	7146704	CHAMELEON II SHORT STRAIGHT SECTION
1	7146704	CHAMELEON II SHORT STRAIGHT SECTION
1	7146704	CHAMELEON II SHORT STRAIGHT SECTION
1	7146707	CHAMELEON II LONG STRAIGHT SECTION
1	7146707	CHAMELEON II LONG STRAIGHT SECTION
1	7146707	CHAMELEON II LONG STRAIGHT SECTION
1	7146706	CHAMELEON II LEFT SECTION
1	7146085	WAVY WEDGE WALL WALKER (5' DECK)
1	7145029	SQUARE DECK (ATTACHES TO 4 POSTS)
1		
1		

NOT FOR BIDDING PURPOSES

1 71485159 SQUARE TRANSFER POINT W/CLOSED HR (5' DECK) 1 71497049 4' ARCH BRIDGE BETWEEN DECKS 2 7145129 PENTAGON DECK (ATTACHES TO 5 POSTS) 1 7146835 HURRICANE CLIMBER (5' DECK) 1 7146701 CHAMELEON II ENTRY & EXIT (5' -6'6" DECK) 1 7146704 CHAMELEON II SHORT STRAIGHT SECTION 1 7146705 CHAMELEON II RIGHT SECTION 1 714808 CLIMBING POLE (3', 5' OR 6'6" DECK) 1 7149939 ADA STAIRS BTWN DECKS W/1'6" RISE 1 7148161 WIRE MESH ENCLOSURE 1 7147396 30" ID STRAIGHT TUBE SLIDE (6'6"' DECK) 1 7146786 BACKTRACK CLIMBER (6'6" DECK) 1 7146701 CHAMELEON II ENTRY & EXIT (5' -6'6" DECK) 1 7146706 CHAMELEON II LEFT SECTION 1 7146706 CHAMELEON II LEFT SECTION 1 7146707 CHAMELEON II LONG STRAIGHT SECTION 1 7146078 BRAIDED CLIMBER (8' DECK) 1 714734 SAFETY PANEL AGES 5-12, FREE STANDING 9 714552 5" OD X 136" POST (3' TO 5' DECKS) 5 714553 5" OD X 160" POST (5'6" TO 6'6" DECKS) 1 7146615 DNA CLIMBER (5' DECK) 1 9991Z BIBA ENTRY SIGN (NO PRICE) 1 9992Z BIBA 6 POST MARKERS (NO PRICE)

PART 3 - INSTALLATION

3.1 INSTALLATION

A. Instructions: Explicit, printed installation instructions, written in English, shall be provided by the manufacturer, which shall include detailed, scaled plan views, elevations, and footing drawings and details when applicable, as well as sequential assembly instructions to assure proper installation of the playground equipment, structure or modular unit.

B. Equipment must be installed by a manufacturer-certified installer and must be installed in accordance with the manufacturer's installation instructions. Installation crew leader must be CPSI-certified. If not installed by a manufacturer-certified installer, the equipment shall be inspected after installation by a CPSI not employed by the installer and signed off by said CPSI before the playground is opened for first use.

C. Close Out: Contractor shall provide the Owner with one copy of complete manufacturer's installation instructions and maintenance kit if provided. Most manufacturers send at least two sets of installation manuals with each order. Additional sets of installation instructions should be purchased from the manufacturer if originals are lost or damaged. It is the Contractor's responsibility to secure the installation instructions from the installer. Miracle Recreation mails one complete set of installation instructions directly to the Owner, and the Contractor shall not be required to supply additional sets to the Owner.

D. Clean Up: The site shall be kept clean and free of tools, trash, debris and installation materials on a daily basis. Material may be stored on site during installation with appropriate protective measures and approval by the Owner's representative.

END OF SECTION 11 68 00

NOT FOR BIDDING PURPOSES

NOT FOR BIDDING PURPOSES

SECTION 12 24 13 - ROLLER SHADES

PART 1 - GENERAL

1.1 RELATED DOCUMENTS

A. Drawings and general provisions of the Contract, including General and Supplementary Conditions and Division 1 Specification Sections, apply to this Section.

1.2 SUMMARY

A. This Section includes roller shades and motorized shade operators:

1. Manually operated roller shades with single rollers.

B. Related Sections include the following:

1. Division 6 Section "Miscellaneous Carpentry" for wood blocking and grounds for mounting roller shades and accessories.

1.3 SUBMITTALS

A. Product Data: For each type of product indicated. Include styles, material descriptions, construction details, dimensions of individual components and profiles, features, finishes, and operating instructions.

B. Shop Drawings: Show location and extent of roller shades. Include elevations, sections, details, and dimensions not shown in Product Data. Show installation details, mountings, attachments to other work, operational clearances, and relationship to adjoining work.

C. Motor Operated Shades: Include details of installation and diagrams for power, signal and control wiring.

D. Coordination Drawings: Reflected ceiling plans, drawn to scale, on which the following items are shown and coordinated with each other, based on input from installers of the items involved:

1. Ceiling suspension system members and attachment to building structure.
2. Ceiling-mounted or penetrating items including light fixtures, air outlets and inlets, speakers, sprinklers, recessed shades, and special moldings at walls, column penetrations, and other junctures of acoustical ceilings with adjoining construction.
3. Shade mounting assembly and attachment.
4. Size and location of access to shade operator and adjustable components.
5. Minimum Drawing Scale: 1/8 inch = 1 foot (1:96).

E. Samples for Initial Selection: For each colored component of each type of shade indicated.

1. Include similar samples of accessories involving color selection.

F. Samples for Verification:

1. Complete, full-size operating unit not less than 16 inches (400 mm) wide for each type of roller shade indicated.

2. For the following products:

a. Shade Material: Not less than 3 inches (76 mm) square, with specified treatments applied. Mark face of material.

b. Shade Material: Not less than 12-inch- (300-mm-) square section of fabric, from dye lot used for the Work, with specified treatments applied. Show complete pattern repeat. Mark top and face of material.

c. Fascia: Full-size unit, not less than 12 inches (300 mm) long.

G. Roller Shade Schedule: Use same designations indicated on Drawings.

H. Product Certificates: For each type of roller shade, signed by product manufacturer.

I. Qualification Data: For Installer.

J. Product Test Reports: For each type of roller shade.

K. Product Test Reports: Based on evaluation of comprehensive tests performed by a qualified testing agency, for each type of roller shade.

L. Maintenance Data: For roller shades to include in maintenance manuals. Include the following:

1. Methods for maintaining roller shades and finishes.
2. Precautions about cleaning materials and methods that could be detrimental to fabrics, finishes, and performance.
3. Operating hardware.

1.4 QUALITY ASSURANCE

A. Installer Qualifications: Fabricator of products.

B. Source Limitations: Obtain roller shades through one source from a single manufacturer.

C. Fire-Test-Response Characteristics: Provide roller shade band materials with the fire-test-response characteristics indicated, as determined by testing identical products per test method indicated below by UL or another testing and inspecting agency acceptable to authorities having jurisdiction:

1. Flame-Resistance Ratings: Passes NFPA 701.

D. Product Standard: Provide roller shades complying with WCMA A 100.1.

E. Mockups: Build mockups to verify selections made under sample submittals and to demonstrate aesthetic effects and set quality standards for materials and execution.

NOT FOR BIDDING PURPOSES

1. Approved mockups may become part of the completed Work if undisturbed at time of Substantial Completion.

1.5 DELIVERY, STORAGE, AND HANDLING

A. Deliver shades in factory packages, marked with manufacturer and product name, fire-test-response characteristics, lead-free designation, and location of installation using same designations indicated on Drawings and in a window treatment schedule.

1.6 PROJECT CONDITIONS

A. Environmental Limitations: Do not install roller shades until construction and wet and dirty finish work in spaces, including painting, is complete and ambient temperature and humidity conditions are maintained at the levels indicated for Project when occupied for its intended use.

B. Field Measurements: Where roller shades are indicated to fit to other construction, verify dimensions of other construction by field measurements before fabrication and indicate measurements on Shop Drawings. Allow clearances for operable glazed units' operation hardware throughout the entire operating range. Notify Architect of discrepancies. Coordinate fabrication schedule with construction progress to avoid delaying the Work.

1.7 EXTRA MATERIALS

A. Furnish extra materials described below that match products installed and that are packaged with protective covering for storage and identified with labels describing contents.

1. Rollers Shades: Before installation begins, for each size, color, texture, and pattern indicated, full-size units equal to 5 percent of amount installed.

PART 2 - PRODUCTS

2.1 ROLLER SHADES – RS-1

A. Basis-of-Design Product: Subject to compliance with requirements, provide MechoShade Systems, Inc; Mecho/5 Shade System, Vertical Style with Snap Loc Fascia or a comparable product by one of the following:

1. Draper Inc.
2. Hunter Douglas, Inc., Contract.
3. Lutron Shading Solutions by VIMCO.

B. Shade Band Material: Woven FR Vinyl.

1. Fabric Width: As required to cover window without vertical seams.
2. Pattern: Visually transparent single-fabric shadecloth Eurotwill 6000 Series.
3. Style: Transparent Open Basket Weave.
4. Colors: To be selected from full range of standard finishes.

NOT FOR BIDDING PURPOSES

5. Material Openness Factor: 5 percent.
6. Bottom Hem: Straight.
7. Trim: As indicated by manufacturer's designation for style and color.

C. Rollers: Electrogalvanized or epoxy primed steel or extruded-aluminum tube of diameter and wall thickness required to support and fit internal components of operating system and the weight and width of shade band material without sagging; designed to be easily removable from support brackets; with manufacturer's standard method for attaching shade material. Provide capacity for two roller shade band(s) per roller, unless otherwise indicated in a window treatment schedule.

D. Direction of Roll: Regular, from back of roller, and reverse, from front of roller, as indicated on Drawings for double-roller shades.

E. Mounting Brackets: Galvanized or zinc-plated steel.

F. Fascia: L-shaped, formed-steel sheet or extruded aluminum; long edges returned or rolled; continuous panel concealing front and bottom of shade roller, brackets, and operating hardware and operators; length as indicated in a window treatment schedule; removable design for access. Surface mounted.

G. Fascia End Caps: 18” (3mm) thick sheet steel wall or jamb mounted. Material and finish to match fascia.

H. Top/Back Cover: L-shaped; material and finish to match fascia; combining with fascia and end caps to form a six-sided headbox enclosure sized to fit shade roller and operating hardware inside.

I. Pocket-Style Headbox: U-shaped, formed-steel sheet or extruded aluminum; long edges returned or rolled; with a bottom cover consisting of slot opening of minimum dimension to allow lowering and raising of shade and a removable or an openable, continuous metal access panel concealing shade roller, brackets, and operating hardware and operators within.

J. Bottom Bar: Steel or extruded aluminum. Provide concealed, by pocket of shade material, internal-type bottom bar with concealed weight bar as required for smooth, properly balanced shade operation.

K. Mounting: As indicated on Drawings, mounting permitting easy removal and replacement without damaging roller shade or adjacent surfaces and finishes.

L. Hold-Down Brackets and Hooks or Pins: Manufacturer's standard for anchoring roller shade bottom in place and keeping shade band material taut.

M. Shade Operation: Manual; with continuous-loop bead-chain, clutch, and cord tensioner and bracket lift operator.

1. Position of Clutch Operator: Right side of roller, as determined by hand of user facing shade from inside, unless otherwise indicated in a window treatment schedule.
2. Clutch: Capacity to lift size and weight of shade; sized to fit roller or provide adaptor.
3. Lift-Assist Mechanism: Manufacturer's standard spring assist for balancing roller shade weight and lifting heavy roller shades.
4. Loop Length: Length required to make operation convenient from floor level.
5. Bead Chain: Stainless steel.
6. Operating Function: Stop and hold shade at any position in ascending or descending travel.

NOT FOR BIDDING PURPOSES

NOT FOR BIDDING PURPOSES

2.2 ROLLER SHADES – RS-2

A. Basis-of-Design Product: Subject to compliance with requirements, provide MechoShade Systems, Inc; Mecho/5 Shade System, Vertical Style with Snap Loc Fascia or a comparable product by one of the following:

1. Draper Inc.
2. Hunter Douglas, Inc., Contract.
3. Lutron Shading Solutions by VIMCO.

B. Shade Band Material: Woven FR Vinyl.

1. Fabric Width: As required to cover window without vertical seams.
2. Product Description: Roller shade consisting of a roller, a means of supporting the roller, a flexible sheet or band of material carried by the roller, a means of attaching the material to the roller, a bottom bar, and an operating mechanism that lifts and lowers the shade.
3. Concealed Components: Non-corrodible or corrosion-resistant-coated materials.
   a. Lifting Mechanism: With permanently lubricated moving parts.
4. Colors: To be selected from full range of standard finishes.
5. Material Openness Factor: 0 percent.
6. Bottom Hem: Straight.
7. Trim: As indicated by manufacturer's designation for style and color.

C. Rollers: Electrogalvanized or epoxy primed steel or extruded-aluminum tube of diameter and wall thickness required to support and fit internal components of operating system and the weight and width of shade band material without sagging; designed to be easily removable from support brackets; with manufacturer's standard method for attaching shade material. Provide capacity for two roller shade band(s) per roller, unless otherwise indicated in a window treatment schedule.

D. Direction of Roll: Regular, from back of roller, and reverse, from front of roller, as indicated on Drawings for double-roller shades.

E. Mounting Brackets: Galvanized or zinc-plated steel.

F. Fascia: L-shaped, formed-steel sheet or extruded aluminum; long edges returned or rolled; continuous panel concealing front and bottom of shade roller, brackets, and operating hardware and operators; length as indicated in a window treatment schedule; removable design for access. Surface mounted.

G. Fascia End Caps: 18” (3mm) thick sheet steel wall or jamb mounted. Material and finish to match fascia.

H. Top/Back Cover: L-shaped; material and finish to match fascia; combining with fascia and end caps to form a six-sided headbox enclosure sized to fit shade roller and operating hardware inside.

I. Pocket-Style Headbox: U-shaped, formed-steel sheet or extruded aluminum; long edges returned or rolled; with a bottom cover consisting of slot opening of minimum dimension to allow

lowering and raising of shade and a removable or an openable, continuous metal access panel concealing shade roller, brackets, and operating hardware and operators within.

J. Bottom Bar: Steel or extruded aluminum. Provide concealed, by pocket of shade material, internal-type bottom bar with concealed weight bar as required for smooth, properly balanced shade operation.

K. Mounting: As indicated on Drawings, mounting permitting easy removal and replacement without damaging roller shade or adjacent surfaces and finishes.

L. Hold-Down Brackets and Hooks or Pins: Manufacturer's standard for anchoring roller shade bottom in place and keeping shade band material taut.

M. Shade Operation: Manual; with continuous-loop bead-chain, clutch, and cord tensioner and bracket lift operator.

1. Position of Clutch Operator: Right side of roller, as determined by hand of user facing shade from inside, unless otherwise indicated in a window treatment schedule.
2. Clutch: Capacity to lift size and weight of shade; sized to fit roller or provide adaptor.
3. Lift-Assist Mechanism: Manufacturer's standard spring assist for balancing roller shade weight and lifting heavy roller shades.
4. Loop Length: Length required to make operation convenient from floor level.
5. Bead Chain: Stainless steel.
6. Operating Function: Stop and hold shade at any position in ascending or descending travel.

PART 3 - EXECUTION

3.1 EXAMINATION

A. Examine substrates, areas, and conditions, with Installer present, for compliance with requirements for installation tolerances, operational clearances, accurate locations of connections to building electrical system, and other conditions affecting performance.

1. Proceed with installation only after unsatisfactory conditions have been corrected.

3.2 ROLLER SHADE INSTALLATION

A. Install roller shades level, plumb, and aligned with adjacent units according to manufacturer's written instructions, and located so shade band is not closer than 2 inches (50 mm) to interior face of glass. Allow clearances for window operation hardware.

B. Connections: Connect motorized operators to building electrical system.

3.3 ADJUSTING

A. Adjust and balance roller shades to operate smoothly, easily, safely, and free from binding or malfunction throughout entire operational range.

NOT FOR BIDDING PURPOSES

3.4 CLEANING AND PROTECTION

A. Clean roller shade surfaces after installation, according to manufacturer's written instructions.

B. Provide final protection and maintain conditions, in a manner acceptable to manufacturer and Installer, that ensure that roller shades are without damage or deterioration at time of Substantial Completion.

C. Replace damaged roller shades that cannot be repaired, in a manner approved by Architect, before time of Substantial Completion.

WINDOW TREATMENT SCHEDULE

SILVER LAKE ELEMENTARY SCHOOL WINDOW TREATMENT SCHEDULE

Mark	Width	Height	Room Name	Room Number	Window Treatment
A	3' - 0 3/8"	5' - 4 3/8"	VESTIBULE	100	-
A	3' - 0 3/8"	5' - 4 3/8"	VESTIBULE	100	-
B	6' - 0 3/8"	5' - 4 3/8"	VESTIBULE	100	-
B	6' - 0 3/8"	5' - 4 3/8"	VESTIBULE	100	-
L	15' - 0 3/8"	5' - 4 3/8"	VESTIBULE	100	-
A	3' - 0 3/8"	5' - 4 3/8"	CORRIDOR	102	-
A	3' - 0 3/8"	5' - 4 3/8"	CORRIDOR	102	-
C	9' - 0 3/8"	5' - 4 3/8"	CORRIDOR	102	-
C	9' - 0 3/8"	5' - 4 3/8"	CORRIDOR	102	-
A	3' - 0 3/8"	5' - 4 3/8"	ENSEMBLE	103	RS-2
A	3' - 0 3/8"	5' - 4 3/8"	ENSEMBLE	103	RS-2
B	6' - 0 3/8"	5' - 4 3/8"	ENSEMBLE	103	RS-2
B	6' - 0 3/8"	5' - 4 3/8"	COMM SUPPORT	130	RS-1
K	6' - 0 3/8"	5' - 4 3/8"	MEDIA CENTER	132	RS-1
K	6' - 0 3/8"	5' - 4 3/8"	MEDIA CENTER	132	RS-1
K	6' - 0 3/8"	5' - 4 3/8"	MEDIA CENTER	132	RS-1
K	6' - 0 3/8"	5' - 4 3/8"	MEDIA CENTER	132	RS-1
A	3' - 0 3/8"	5' - 4 3/8"	COMMONS	204	RS-2
A	3' - 0 3/8"	5' - 4 3/8"	COMMONS	204	RS-2
H	9' - 0 3/8"	5' - 4 3/8"	COMMONS	204	RS-2
B	6' - 0 3/8"	5' - 4 3/8"	CLASSROOM	206	RS-2
B	6' - 0 3/8"	5' - 4 3/8"	CLASSROOM	206	RS-2
B	6' - 0 3/8"	5' - 4 3/8"	CLASSROOM	207	RS-2
B	6' - 0 3/8"	5' - 4 3/8"	CLASSROOM	207	RS-2
A	3' - 0 3/8"	5' - 4 3/8"	COMMONS	213	RS-2
A	3' - 0 3/8"	5' - 4 3/8"	COMMONS	213	RS-2
H	9' - 0 3/8"	5' - 4 3/8"	COMMONS	213	RS-2
B	6' - 0 3/8"	5' - 4 3/8"	CLASSROOM	215	RS-2
B	6' - 0 3/8"	5' - 4 3/8"	CLASSROOM	215	RS-2
B	6' - 0 3/8"	5' - 4 3/8"	CLASSROOM	216	RS-2
B	6' - 0 3/8"	5' - 4 3/8"	CLASSROOM	216	RS-2
K	6' - 0 3/8"	5' - 4 3/8"	CLASSROOM	219	RS-2
K	6' - 0 3/8"	5' - 4 3/8"	CLASSROOM	219	RS-2
K	6' - 0 3/8"	5' - 4 3/8"	CLASSROOM	220	RS-2
K	6' - 0 3/8"	5' - 4 3/8"	CLASSROOM	220	RS-2
K	6' - 0 3/8"	5' - 4 3/8"	CLASSROOM	221	RS-2
K	6' - 0 3/8"	5' - 4 3/8"	CLASSROOM	221	RS-2
K	6' - 0 3/8"	5' - 4 3/8"	CLASSROOM	222	RS-2
K	6' - 0 3/8"	5' - 4 3/8"	CLASSROOM	222	RS-2
K	6' - 0 3/8"	5' - 4 3/8"	CLASSROOM	223	RS-2
M	3' - 0 3/8"	5' - 4 3/8"	CORRIDOR	300	-
M	3' - 0 3/8"	5' - 4 3/8"	CORRIDOR	300	-
B	6' - 0 3/8"	5' - 4 3/8"	ASST. PRINC.	302	RS-1
B	6' - 0 3/8"	5' - 4 3/8"	INTVNT.	303	RS-1
B	6' - 0 3/8"	5' - 4 3/8"	CLASSROOM	304	RS-2
B	6' - 0 3/8"	5' - 4 3/8"	CLASSROOM	305	RS-2
B	6' - 0 3/8"	5' - 4 3/8"	CLASSROOM	305	RS-2
J	6' - 0 3/8"	7' - 4 3/8"	CLASSROOM	305	RS-2
X	3' - 0 3/8"	5' - 4 3/8"	CLASSROOM	305	RS-2
X	3' - 0 3/8"	5' - 4 3/8"	CLASSROOM	305	RS-2
B	6' - 0 3/8"	5' - 4 3/8"	FACULTY	306	RS-1
B	6' - 0 3/8"	5' - 4 3/8"	CLASSROOM	308	RS-2

NOT FOR BIDDING PURPOSES

NOT FOR BIDDING PURPOSES

SILVER LAKE ELEMENTARY SCHOOL WINDOW TREATMENT SCHEDULE

Mark	Width	Height	Room Name	Room Number	Window Treatment
B	6' - 0 3/8"	5' - 4 3/8"	CLASSROOM	308	RS-2
A	3' - 0 3/8"	5' - 4 3/8"	COMMONS	309	RS-2
A	3' - 0 3/8"	5' - 4 3/8"	COMMONS	309	RS-2
H	9' - 0 3/8"	5' - 4 3/8"	COMMONS	309	RS-2
B	6' - 0 3/8"	5' - 4 3/8"	CLASSROOM	310	RS-2
B	6' - 0 3/8"	5' - 4 3/8"	CLASSROOM	310	RS-2
B	6' - 0 3/8"	5' - 4 3/8"	ESL	316	RS-2
B	6' - 0 3/8"	5' - 4 3/8"	SPANISH RELATED ARTS	317	RS-2
B	6' - 0 3/8"	5' - 4 3/8"	SPANISH RELATED ARTS	317	RS-2
B	6' - 0 3/8"	5' - 4 3/8"	CLASSROOM	322	RS-2
B	6' - 0 3/8"	5' - 4 3/8"	CLASSROOM	322	RS-2
A	3' - 0 3/8"	5' - 4 3/8"	COMMONS	323	RS-2
A	3' - 0 3/8"	5' - 4 3/8"	COMMONS	323	RS-2
H	9' - 0 3/8"	5' - 4 3/8"	COMMONS	323	RS-2
B	6' - 0 3/8"	5' - 4 3/8"	CLASSROOM	324	RS-2
B	6' - 0 3/8"	5' - 4 3/8"	CLASSROOM	324	RS-2
B	6' - 0 3/8"	5' - 4 3/8"	FACULTY	326	RS-1
B	6' - 0 3/8"	5' - 4 3/8"	CLASSROOM	327	RS-2
B	6' - 0 3/8"	5' - 4 3/8"	CLASSROOM	327	RS-2
J	6' - 0 3/8"	7' - 4 3/8"	CLASSROOM	327	RS-2
X	3' - 0 3/8"	5' - 4 3/8"	CLASSROOM	327	RS-2
X	3' - 0 3/8"	5' - 4 3/8"	CLASSROOM	327	RS-2
B	6' - 0 3/8"	5' - 4 3/8"	CLASSROOM	328	RS-2
B	6' - 0 3/8"	5' - 4 3/8"	CLASSROOM	328	RS-2
A	3' - 0 3/8"	5' - 4 3/8"	CORRIDOR	329	-
A	3' - 0 3/8"	5' - 4 3/8"	CORRIDOR	329	-
M	3' - 0 3/8"	5' - 4 3/8"	CORRIDOR	329	-
M	3' - 0 3/8"	5' - 4 3/8"	CORRIDOR	329	-
K	6' - 0 3/8"	5' - 4 3/8"	CLASSROOM	330	RS-2
K	6' - 0 3/8"	5' - 4 3/8"	CLASSROOM	330	RS-2
K	6' - 0 3/8"	5' - 4 3/8"	SGI	331	RS-2
K	6' - 0 3/8"	5' - 4 3/8"	SGI	331	RS-2
K	6' - 0 3/8"	5' - 4 3/8"	SGI	335	RS-2
K	6' - 0 3/8"	5' - 4 3/8"	SGI	335	RS-2
K	6' - 0 3/8"	5' - 4 3/8"	CLASSROOM	336	RS-2
K	6' - 0 3/8"	5' - 4 3/8"	CLASSROOM	336	RS-2
A	3' - 0 3/8"	5' - 4 3/8"	COMMONS	403	RS-2
A	3' - 0 3/8"	5' - 4 3/8"	COMMONS	403	RS-2
H	9' - 0 3/8"	5' - 4 3/8"	COMMONS	403	RS-2
B	6' - 0 3/8"	5' - 4 3/8"	CLASSROOM	404	RS-2
B	6' - 0 3/8"	5' - 4 3/8"	CLASSROOM	404	RS-2
B	6' - 0 3/8"	5' - 4 3/8"	CLASSROOM	405	RS-2
B	6' - 0 3/8"	5' - 4 3/8"	CLASSROOM	405	RS-2
B	6' - 0 3/8"	5' - 4 3/8"	ART ROOM	412	RS-2
B	6' - 0 3/8"	5' - 4 3/8"	ART ROOM	412	RS-2
B	6' - 0 3/8"	5' - 4 3/8"	ART ROOM	412	RS-2
K	6' - 0 3/8"	5' - 4 3/8"	CONFERENCE	418	RS-1
K	6' - 0 3/8"	5' - 4 3/8"	OFFICE	419	RS-1
K	6' - 0 3/8"	5' - 4 3/8"	OFFICE	419	RS-1
K	6' - 0 3/8"	5' - 4 3/8"	GUIDANCE	420	RS-1
K	6' - 0 3/8"	5' - 4 3/8"	CLASSROOM	426	RS-2
K	6' - 0 3/8"	5' - 4 3/8"	CLASSROOM	426	RS-2

SILVER LAKE ELEMENTARY SCHOOL WINDOW TREATMENT SCHEDULE

Mark	Width	Height	Room Name	Room Number	Window Treatment
K	6' - 0 3/8"	5' - 4 3/8"	CLASSROOM	427	RS-2
K	6' - 0 3/8"	5' - 4 3/8"	CLASSROOM	427	RS-2
K	6' - 0 3/8"	5' - 4 3/8"	CLASSROOM	428	RS-2
K	6' - 0 3/8"	5' - 4 3/8"	CLASSROOM	428	RS-2
A	3' - 0 3/8"	5' - 4 3/8"	VESTIBULE	501	-
A	3' - 0 3/8"	5' - 4 3/8"	VESTIBULE	501	-
B	6' - 0 3/8"	5' - 4 3/8"	VESTIBULE	501	-
B	6' - 0 3/8"	5' - 4 3/8"	VESTIBULE	501	-
D	6' - 0 3/8"	5' - 4 3/8"	GYMNASIUM	502	-
D	6' - 0 3/8"	5' - 4 3/8"	GYMNASIUM	502	-
E	6' - 0 3/8"	4' - 0 3/8"	GYMNASIUM	502	-
E	6' - 0 3/8"	4' - 0 3/8"	GYMNASIUM	502	-
E	6' - 0 3/8"	4' - 0 3/8"	GYMNASIUM	502	-
E	6' - 0 3/8"	4' - 0 3/8"	GYMNASIUM	502	-
E	6' - 0 3/8"	4' - 0 3/8"	GYMNASIUM	502	-
E	6' - 0 3/8"	4' - 0 3/8"	GYMNASIUM	502	-
F	9' - 0 3/8"	4' - 0 3/8"	GYMNASIUM	502	-
F	9' - 0 3/8"	4' - 0 3/8"	GYMNASIUM	502	-
F	9' - 0 3/8"	4' - 0 3/8"	GYMNASIUM	502	-
F	9' - 0 3/8"	4' - 0 3/8"	GYMNASIUM	502	-
C	9' - 0 3/8"	5' - 4 3/8"	FITNESS	503	RS-1
G	9' - 0 3/8"	3' - 4 3/8"	STORAGE	505	-
B	6' - 0 3/8"	5' - 4 3/8"	CORRIDOR	600	-
B	6' - 0 3/8"	5' - 4 3/8"	CORRIDOR	600	-
B	6' - 0 3/8"	5' - 4 3/8"	CORRIDOR	600	-
B	6' - 0 3/8"	5' - 4 3/8"	CORRIDOR	600	-
B	6' - 0 3/8"	5' - 4 3/8"	CORRIDOR	600	-
A	3' - 0 3/8"	5' - 4 3/8"	PRINCIPAL	602	RS-1
C	9' - 0 3/8"	5' - 4 3/8"	PRINCIPAL	602	RS-1
B	6' - 0 3/8"	5' - 4 3/8"	CONFERENCE ROOM	603	RS-1
C	9' - 0 3/8"	5' - 4 3/8"	OPEN OFFICE	604	RS-1
A	3' - 0 3/8"	5' - 4 3/8"	CONFERENCE ROOM	605	RS-1
A	3' - 0 3/8"	5' - 4 3/8"	CONFERENCE ROOM	605	RS-1
B	6' - 0 3/8"	5' - 4 3/8"	CONFERENCE ROOM	605	RS-1
C	9' - 0 3/8"	5' - 4 3/8"	CONFERENCE ROOM	605	RS-1
A	3' - 0 3/8"	5' - 4 3/8"	FINANCE	606	RS-1

NOT FOR BIDDING PURPOSES

SILVER LAKE ELEMENTARY SCHOOL WINDOW TREATMENT SCHEDULE

			From Room		Window Treatment
Mark	Width	Height	Name	Number	Column1
K	6' - 0 3/8"	5' - 4 3/8"	CLASSROOM	427	RS-2
K	6' - 0 3/8"	5' - 4 3/8"	CLASSROOM	427	RS-2
K	6' - 0 3/8"	5' - 4 3/8"	CLASSROOM	428	RS-2
K	6' - 0 3/8"	5' - 4 3/8"	CLASSROOM	428	RS-2
A	3' - 0 3/8"	5' - 4 3/8"	VESTIBULE	501	-
A	3' - 0 3/8"	5' - 4 3/8"	VESTIBULE	501	-
B	6' - 0 3/8"	5' - 4 3/8"	VESTIBULE	501	-
B	6' - 0 3/8"	5' - 4 3/8"	VESTIBULE	501	-
D	6' - 0 3/8"	5' - 4 3/8"	GYMNASIUM	502	-
D	6' - 0 3/8"	5' - 4 3/8"	GYMNASIUM	502	-
E	6' - 0 3/8"	4' - 0 3/8"	GYMNASIUM	502	-
E	6' - 0 3/8"	4' - 0 3/8"	GYMNASIUM	502	-
E	6' - 0 3/8"	4' - 0 3/8"	GYMNASIUM	502	-
E	6' - 0 3/8"	4' - 0 3/8"	GYMNASIUM	502	-
E	6' - 0 3/8"	4' - 0 3/8"	GYMNASIUM	502	-
E	6' - 0 3/8"	4' - 0 3/8"	GYMNASIUM	502	-
F	9' - 0 3/8"	4' - 0 3/8"	GYMNASIUM	502	-
F	9' - 0 3/8"	4' - 0 3/8"	GYMNASIUM	502	-
F	9' - 0 3/8"	4' - 0 3/8"	GYMNASIUM	502	-
F	9' - 0 3/8"	4' - 0 3/8"	GYMNASIUM	502	-
C	9' - 0 3/8"	5' - 4 3/8"	FITNESS	503	-
G	9' - 0 3/8"	3' - 4 3/8"	STORAGE	505	-
B	6' - 0 3/8"	5' - 4 3/8"	CORRIDOR	600	-
B	6' - 0 3/8"	5' - 4 3/8"	CORRIDOR	600	-
B	6' - 0 3/8"	5' - 4 3/8"	CORRIDOR	600	-
B	6' - 0 3/8"	5' - 4 3/8"	CORRIDOR	600	-
B	6' - 0 3/8"	5' - 4 3/8"	CORRIDOR	600	-
A	3' - 0 3/8"	5' - 4 3/8"	PRINCIPAL	602	RS-1
C	9' - 0 3/8"	5' - 4 3/8"	PRINCIPAL	602	RS-1
B	6' - 0 3/8"	5' - 4 3/8"	CONFERENCE ROOM	603	RS-1
C	9' - 0 3/8"	5' - 4 3/8"	OPEN OFFICE	604	RS-1
A	3' - 0 3/8"	5' - 4 3/8"	CONFERENCE ROOM	605	RS-1
A	3' - 0 3/8"	5' - 4 3/8"	CONFERENCE ROOM	605	RS-1
B	6' - 0 3/8"	5' - 4 3/8"	CONFERENCE ROOM	605	RS-1
C	9' - 0 3/8"	5' - 4 3/8"	CONFERENCE ROOM	605	RS-1
A	3' - 0 3/8"	5' - 4 3/8"	FINANCE	606	RS-1

NOT FOR BIDDING PURPOSES

END OF SECTION 12 24 13

NOT FOR BIDDING PURPOSES

SECTION 12 32 00 - MODULAR CASEWORK

PART 1 – PRODUCTS

1.40 RELATED DOCUMENTS

A. Drawings and general provisions of the Contract, including General and Supplementary Conditions and Division 1 Specification Sections, apply to this Section.

1.41 SUMMARY

A. This Section includes the following:

1. Fixed modular laminate clad casework filler panels, and components.
2. Work Room cabinets and casework
3. Reception desks
4. Countertops.
5. Accessories.
6. Shelving.
7. Stainless steel base
8. Stainless steel supports

B. Related Sections include the following:

1. Division 6 Section “Miscellaneous Carpentry" for wood blocking for anchoring casework.
2. Division 9 Section "Resilient Wall Base and Accessories" for resilient base applied to plastic-laminate casework.
3. Division 22 Sections for installing plumbing and fixtures in casework.

1.42 DEFINITIONS

A. Identification of casework components and related products by surface visibility.

1. Open Interiors: Any open storage unit without solid door or drawer fronts and units with full glass insert doors and/or acrylic doors.
2. Closed Interiors: Any closed storage unit behind solid door or drawer fronts, sliding solid doors.
3. Exposed Ends: Any storage unit exterior side surface that is visible after installation.
4. Other Exposed Surfaces: Faces of doors and drawers when closed, and tops of cabinets less than 78 inches above furnished floor.
5. Semi-Exposed Surfaces: Interior surfaces which are visible, bottoms of wall cabinets and tops of cabinets 78 inches or more above finished floor.
6. Concealed Surfaces: Any surface not visible after installation.

NOT FOR BIDDING PURPOSES

NOT FOR BIDDING PURPOSES

1.4 QUALITY ASSURANCE

A. Manufacturer/Fabricator: Minimum of 10 years experience in providing manufactured casework systems for similar types of projects, produce evidence of financial stability, bonding capacity, and adequate facilities and personnel required to perform on this project.

1.5 SUBMITTALS

A. Product Data:

1. Panel products, high-pressure decorative laminate, solid-surfacing material, including cabinet hardware and accessories, and finishing materials and processes.

B. Shop Drawings: Indicate dimensions, description of materials and finishes, general construction, specific modifications, component connections, anchorage methods, hardware, and installation procedures, plus the following specific requirements.

1. Include section drawings of typical and special casework, work surfaces and accessories. Details for Stainless steel wrapped wood base
2. Show locations and sizes of cutouts and holes for plumbing fixtures, faucets, and other items installed in architectural woodwork.
3. Indicate locations of plumbing and electrical service field connection by others.
4. Include details of utility spaces showing supports for conduits and piping.
5. Include details of exposed conduits, if required, for service fittings.
6. Indicate locations of and clearances from adjacent walls, doors, windows, other building components, and other laboratory equipment.
7. Show locations and sizes of furring, blocking, and hanging strips, including concealed blocking and reinforcement specified in other Sections.

1.6 DELIVERY, STORAGE, & PRODUCT HANDLING

A. Completed laminate clad casework, countertops, and related products are to be delivered to project site only after wet operations in building are completed, store in ventilated place, protected from the weather, with relative humidity range of 25 percent to 55 percent.

B. Protect finished surfaces from soiling and damage during handling and installation with a protective covering.

1.7 COORDINATION

A. Coordinate delivery, layout, rough-in and installation for support of modular casework.

B. Coordinate sizes and locations of framing, blocking, furring, reinforcements, and other related units of Work specified in other Sections to ensure that casework can be supported and installed as indicated.

C. Coordinate installation of modular casework with installation of plumbing, electrical, and mechanical equipment.

D. The casework contractor shall verify all critical building dimensions prior to fabrication of casework. The casework manufacturer shall re-configure the casework arrangement to dimensions requiring 2-1/2" of less of filler at each end of wall-to-wall elevations and to ensure a complete and satisfactory installation.

E. Obtain template for sinks, faucets, electrical devices and other fixtures and devices mounted in casework and countertops for other contractors and installers.

1.8 JOB CONDITIONS

A. Environmental Requirements: Do not install casework until permanent HVAC systems are operating and temperature and humidity have been stabilized for at least 1 week.

1. Manufacturer/Supplier shall advise Contractor of temperature and humidity requirements for architectural casework installation areas.
2. After installation, control temperature and humidity to maintain relative humidity between 25 percent and 55 percent.

B. Conditions: Do not install casework until interior concrete work, masonry, plastering and other wet operations are complete.

C. Field Measurements: Where woodwork is indicated to fit to other construction, verify dimensions of other construction by field measurements before fabrication, and indicate measurements on Shop Drawings. Coordinate fabrication schedule with construction progress to avoid delaying the Work.

1. Locate concealed framing, blocking, and reinforcements that support woodwork by field measurements before being enclosed, and indicate measurements on Shop Drawings.
2. Established Dimensions: Where field measurements cannot be made without delaying the Work, establish dimensions and proceed with fabricating woodwork without field measurements. Provide allowance for trimming at site, and coordinate construction to ensure that actual dimensions correspond to established dimensions.

1.9 WARRANTY

A. All materials and workmanship covered by this section will carry a five (5) year warranty from date of acceptance & a ten (10) year warranty for instrument storage units, unless otherwise noted.

PART 2 – PRODUCTS

2.1 MATERIALS

A. Core Materials:

1. Particleboard up to 7/8 inch thick: Industrial Grade average 47-pound density particleboard, ANSI A 208.1-1999, M-3. made with binder containing no urea formaldehyde.
2. Particleboard 1 inch thick and thicker: Industrial Grade average 45-pound density particle-board, ANSI A 208.1-1999, M-2. made with binder containing no urea formaldehyde..
3. Medium Density Fiberboard 1/4 inch thick: Average 54-pound density grade, ANSI A208.2. made with binder containing no urea formaldehyde.

NOT FOR BIDDING PURPOSES

4. Hardwood Plywood: HPVA HP-1, either veneer core or particleboard core, unless otherwise indicated made with binder containing no urea formaldehyde.
5. Moisture resistant particleboard up to 1 inch thick: Industrial Grade average 45-pound density particleboard, ANSI A 208.1-1999, M-3 made with binder containing no urea formaldehyde.
6. All hardboard shall be tempered with a S2S surface finish and must meet or exceed the hardboard product standard ANSI-A135.5.
7. Exterior grade resins.
8. Casework and work surface core panel materials to be made of engineered board that:

    a. Meets ANSI 208.1 M2 PB specifications
    b. Uses formaldehyde-free, exterior-grade polyurethane resin (NAF)
    c. Has VOC emission factors that are less than 0.01 ppm
    d. Core Material at Sinks: exterior-grade plywood or exterior grade MDF .

B. Decorative Laminates:

1. Standards NEMA LD 3, grades as indicated or, if not indicated, as required by woodwork quality standard:

    a. High-pressure decorative laminate VGS (.028), NEMA Test LD 3-2000.
    b. High-pressure decorative laminate HGS (.048), NEMA Test LD 3-2000.
    c. High-pressure decorative laminate HGP (.039), NEMA Test LD 3-2000.
    d. High-pressure cabinet liner CLS (.020), NEMA Test LD 3-2000.
    e. High-pressure backer BKH (.048), (.039), (.028), NEMA Test LD3-2000.
    f. Thermally fused melamine laminate, NEMA Test LD 3-2000. Color as selected by Architect

2. Manufacturer: Subject to compliance with requirements, provide Wilsonart International; Div. of Premark International, Inc. high-pressure decorative laminates by one of the following:

    a. Pionite
    b. Formica Corporation.
    c. Nevamar Company, LLC; Decorative Products Div.
    d. Laminart

3. Laminate Colors and Patterns:
    a. PL-1: 7909-60 Fusion Maple
    b. PL-2: 5013K-19 Mushroom
    c. PL-3: 4862K-07 Sandy Topaz
    d. PL-4: 4878-38 Pewter Mesh
    e. PL-5: 4623-60 Graphite Nebula
    f. PL-6: 4879-38 Steel Mesh
    g. PL-7: D307-60 Hollyberry
    h. PL-8: D417-60 Lapis Blue
    i. PL-9: 4918-60 Sprout
    j. PL-10: 4913-60 Eggplant
    k. PL-11: 4915-60 Tangerine
    l. PL-12: 6100 Matte Pewter

NOT FOR BIDDING PURPOSES

2.2 PLASTIC LAMINATE-FACED CABINETS

A. Design: Flush Overlay

B. Exposed Materials:

2. Plastic Laminate: Grade VGS.

a. Colors and Patterns:
1) PL-1: 7909-60 Fusion Maple
2) PL-2: 5013K-19 Mushroom
3) PL-3: 4862K-07 Sandy Topaz
4) PL-4: 4878-38 Pewter Mesh
5) PL-5: 4623-60 Graphite Nebula
6) PL-6: 4879-38 Steel Mesh
7) PL-7: D307-60 Hollyberry
8) PL-8: D417-60 Lapis Blue
9) PL-9: 4918-60 Sprout
10) PL-10: 4913-60 Eggplant
11) PL-11: 4915-60 Tangerine
12) PL-12: 6100 Matte Pewter

b. Unless otherwise indicated, provide specified edgebanding on all exposed edges

3. Solid Wood: Clear hardwood lumber of species indicated, selected for compatible grain and color.

C. Semi-exposed Materials:

1. Plastic Laminate: Grade VGS unless otherwise indicated. Provide plastic laminate for semi-exposed surfaces unless otherwise indicated.

a. Provide plastic laminate of same grade as exposed surfaces for interior faces of doors and drawer fronts and other locations where opposite side of component is exposed.

2. Thermoset Decorative Panels: Provide thermoset decorative panels for semi-exposed surfaces unless otherwise indicated.

a. Provide plastic laminate of same grade as exposed surfaces for interior faces of doors and drawer fronts and other locations where opposite side of component is exposed.

3. Hardboard: Use only for cabinet backs where exterior side of back is not exposed.
4. Metal for Steel Drawer Pans: Cold-rolled, carbon-steel sheet complying with ASTM A 1008/A 1008M; matte finish; suitable for exposed applications.
5. Unless otherwise indicated, provide specified edgebanding on all semi-exposed edges.

B. Concealed Materials:

NOT FOR BIDDING PURPOSES

1. Solid Wood: Any hardwood or softwood species, with no defects affecting strength or utility.
2. Plywood: Hardwood plywood.
3. Plastic Laminate: Grade BKL.
4. Particleboard.
5. MDF.
6. Hardboard.

C. Edging Materials:

1. 1 mm PVC banding at body front edge, interior components and shelves.
2. 3 mm PVC banding, machine profiled to 1/8-inch radius at door and drawer fronts, and countertops.
3. As selected from manufacturer's standard colors. Architect will select a color to coordinate with final selection of each cabinet body and countertop laminate.

2.3 CABINET HARDWARE

A. Hinges:

1. Frameless concealed Hinges (European Type): BHMA A156.9, Type B01602, 170 degrees of opening, self-closing. Provide two hinges for doors less than 48 inches (1220 mm) high, and provide three hinges for doors more than 48 inches (1220 mm) high.

B. Pulls:

1. Door and drawer front pulls are stainless steel wire type, 96mm spacing on screws. Pull design shall comply with the Americans with Disability Act (ADA) but not less than 4" centers. Install with "tamperproof" screws.

C. Drawer Slides:

1. Regular knee space and pencil: 100-pound load rated epoxy coated steel, bottom corner mounted with smooth and quiet nylon rollers. Positive stop both directions with self-closing feature. Paper storage, full extension 150-pound load rated epoxy coated steel slides.
2. File: Full extension, 150-pound load rated epoxy coated steel, bottom corner mounted with smooth and quiet nylon rollers. Positive stop both directions

D. Adjustable Shelf Supports:

1. Injection molded transparent polycarbonate friction fit into cabinet end panels and vertical dividers, adjustable on 32mm centers. Each shelf support has 2 integral support pins, 5mm diameter, to interface pre-drilled holes, and to prevent accidental rotation of support. The support automatically adapts to 3/4 inch or 1 inch thick shelving and provides non-tip feature for shelving. Supports may be field fixed if desired. Structural load to 1200 pounds (300 pounds per support) without failure.

E. Locks:

NOT FOR BIDDING PURPOSES

1. All drawers and doors shall be lockable.
2. Removable core, disc tumbler, cam style lock with strike. Lock for sliding 3/4-inch-thick doors is a disc type plunger lock, sliding door type with strike. Lock for sliding glass/acrylic doors is a ratchet type sliding showcase lock. Dull chrome finish.
3. Elbow catch or chain bolt used to secure inactive door on all locked cabinets.
4. Key all locks in each room the same unless noted otherwise. Master key all cabinets locks

F. File Suspension System: Extruded molding integral with top of drawer box sides to accept standard hanging file folders.

G. Support Members: Counter Top and Work Top Support Brackets: Preformed heavy duty prefinished steel brackets TMI Systems Design Corp Model A7455 or approved equal. Color as selected by Architect. Spacing as indicated but not to exceed 48 inches.

H. Hardware Finishes:

1. For exposed hardware, provide finish that complies with BHMA A156.18 for BHMA finish number indicated. BHMA 630: Satin Stainless Steel (US32D)

2. For concealed hardware, provide manufacturer's standard finish that complies with product class requirements in BHMA A156.91

2.4 SPECIALTY ITEMS

A. Grommets for Cable Passage through Countertops: 2 ½ inch OD, color to be selected, molded-plastic grommets and matching plastic caps with slot for wire passage. Provide Doug Mockett & Company, Inc., Model # PS-2B-26D or approve equal.

2.5 SOLID SURFACE COUNTERTOPS:

A. Solid-Surfacing Material: Homogeneous solid sheets of filled plastic resin complying with ISSFA-2.

1. Manufacturers: Subject to compliance with requirements, provide Corian or comparable products by one of the following as selected by architect:

a. Avonite, Inc.
b. Formica Corporation.
c. Nevamar Company, LLC; Decorative Products Div.
d. Swan Corporation (The).
e. Wilsonart International; Div. of Premark International, Inc.

2. Colors and Patterns:

a. SS-1: Deep Space
b. SS-2: Silver Birch

NOT FOR BIDDING PURPOSES

NOT FOR BIDDING PURPOSES

2.6 FABRICATION:

A. Fabricate casework, countertops and related products to dimensions, profiles, and details shown.

B. All casework panel components to be finished precisely to size and squareness within 0.01 inches utilizing a sizing process to ensure strict dimensional quality and structural integrity in the final fabricated product.

C. Complete fabrication, including assembly, finishing, and hardware application, to maximum extent possible before shipment to Project site. Disassemble components only as necessary for shipment and installation. Where necessary for fitting at site, provide ample allowance for scribing, trimming, and fitting.

1. Trial fit assemblies at fabrication shop that cannot be shipped completely assembled. Install dowels, screws, bolted connectors, and other fastening devices that can be removed after trial fitting. Verify that various parts fit as intended and check measurements of assemblies against field measurements indicated on Shop Drawings before disassembling for shipment.

2. hop-cut openings to maximum extent possible to receive hardware, appliances, plumbing fixtures, electrical work, and similar items. Locate openings accurately and use templates or roughing-in diagrams to produce accurately sized and shaped openings. Sand edges of cutouts to remove splinters and burrs.

3. Seal edges of openings in countertops with a coat of varnish.

4. Install glass to comply with applicable requirements in Division 8 Section "Glazing" and in GANA's "Glazing Manual." For glass in wood frames, secure glass with removable stops.

D. Laminate Cabinet Body Construction:

1. Tops and bottoms are glued and doweled to cabinet sides and internal cabinet components such as fixed horizontals, rails and verticals. Minimum 6 dowels each joint for 24 inch deep cabinets and a minimum of 4 dowels each joint for 12 inch deep cabinets.

a. Tops, bottoms and sides of all cabinets are 3/4 inch particleboard core.

2. Cabinet backs: 1/2 inch thick particleboard core.

a. Exposed back on fixed or movable cabinets: 3/4 inch thick particleboard with the exterior surface finished in VGS laminate as selected.

3. Fixed base and tall units have an individual factory-applied base, constructed of 3/4 inch thick exterior grade plywood. Base is nominal 4 inch high unless otherwise indicated on the drawings.

4. Base units, except sink base units: Full sub-top. Sink base units are provided with open top and a stretcher at the front, attached to the sides. Back to be split removable access panel.

5. Side panels and vertical dividers shall receive adjustable shelf hardware at 32mm line boring centers. Mount door hinges, drawer slides and pull-out shelves in the line boring for consistent alignment.

6. Exposed and semi exposed edges: High Pressure Decorative Laminate.

7. Adjustable shelf core: 3/4 inch thick particleboard up to 36 inches wide, 1 inch thick particleboard over 36 inches wide. Shelves in open cabinets, regardless of width, shall be 1 inch thick particleboard.

   a. Front edge: 3mm hardwood edges.

8. Interior finish, units with open Interiors:

   a. Top, bottom, sides, horizontal and vertical members, and adjustable shelving faces with thermally fused high-pressure decorative laminate with matching prefinished back.

9. Interior finish, units with closed Interiors:

   a. Top, bottom, sides, horizontal and vertical members, and adjustable shelving faces with thermally fused melamine laminate with matching prefinished back.

10. Exposed ends:

    a. Faced with VGS high-pressure decorative laminate.

11. Wall unit bottom:

    a. Faced with thermally fused melamine laminate.

12. Balanced construction of all laminated panels is mandatory. Unfinished core stock surfaces, even on concealed surfaces (excluding edges), are not permitted.

F. Plastic-Laminate-Faced Cabinet Construction: As required by referenced quality standard, but not less than the following:

1. Bottoms and Ends of Cabinets, and Tops of Wall Cabinets and Tall Cabinets: 3/4-inch particleboard.
2. Shelves: 3/4-inch thick particleboard.
3. Backs of Cabinets: 1/2-inch- thick particleboard or MDF where exposed, 1/4-inch hardboard dadoed into sides, bottoms, and tops where not exposed.
4. Drawer Fronts: 3/4-inch particleboard.
5. Filler Strips: Provide as needed to close spaces between cabinets and walls, ceilings, and indicated equipment. Fabricate from same material and with same finish as cabinets.

G. Drawers:

1. Sides, back and sub front: Minimum 1/2 inch thick particleboard, laminated with thermally fused melamine doweled and glued into sides. Top edge banded with 1 mm PVC.

NOT FOR BIDDING PURPOSES

2. Drawer bottom: Minimum 1/2 inch thick particleboard laminated with thermally fused melamine, screwed directly to the bottom edges of drawer box.

H. Door/Drawer Fronts:

1. Core: 3/4 inch thick particleboard. Door and drawer fronts shall be overlay door design.
2. Provide double doors in opening in excess of 24 inches wide.
3. Laminate Exterior: VGS High-pressure decorative laminate.
4. Interior: High-pressure cabinet liner CLS.
5. Door/drawer edges: 1 mm PVC.

I. Shelving:

1. Core material: 3/4 inch or 1 inch thick particleboard.
3. Exterior: Thermally fused melamine laminate,.
4. Edges: 1 mm PVC banding, all 4 edges.

J. Stainless Steel counter supports

1. Fabricate to dimensions and shapes on drawings
2. Grind all sharp edges to minimal radius
3. Nonwelded Connections: Use mechanical joints for permanently connecting railing components. Use wood blocks and padding to prevent damage to railing members and fittings.

PART 3- EXECUTION

3.1 INSPECTION:

A. Installer shall examine the substrates and supporting structure and the conditions under which the casework is to be installed, including compliance with requirements for installation tolerances, location of reinforcements, and other conditions affecting performance of laboratory casework.

B. Proceed with installation only after unsatisfactory conditions have been corrected.

3.2 PREPARATION:

A. Condition casework to average prevailing humidity conditions in installation areas prior to start of installation.

3.3 INSTALLATION:

A. Install level, pump, and true; shim as required, using concealed shims. Where laminate clad casework abuts other finished work, including but not limited to pipes, ducts, and column enclosures, scribe and cut to accurate fit. Install to tolerance of 1/8 inch in 96 inches for plumb and level. Install adjoining trim with 1/32-inch maximum offset for flush installation and 1/16-inch maximum offset for reveal installation.

B. Securely attach carpentry work to substrate and supporting members using fasteners of size that will not penetrate members where opposite side will be exposed to view or receive finish materials.

NOT FOR BIDDING PURPOSES

Install fasteners without splitting wood; fasten panel products to allow for expansion at joints unless otherwise indicated.

C. Fit carpentry to other construction; scribe and cope as required for accurate fit. Correlate location of furring, nailers, blocking, grounds, and similar supports to allow attachment of other construction. Install wood trim with minimum number of joints practical, using full-length pieces from maximum lengths of lumber available. Cope at returns and miter at corners to produce tight-fitting joints with full-surface contact throughout length of joint. Use scarf joints for end-to-end joints. Install trim after gypsum board joint finishing operations are completed.

D. Countersink nail heads on exposed carpentry work and fill holes with wood filler.

3.4 INSTALLATION OF CABINETS

A. Base Cabinets: Adjust top rails and subtops within 1/16 inch of a single plane. Fasten cabinets to utility-space framing, partition framing, wood blocking, or reinforcements in partitions with fasteners spaced not more than 24 inches o.c. Fasten adjacent cabinets together with joints flush, tight, and uniform. Align similar adjoining doors and drawers to a tolerance of 1/16 inch.

1. Where base cabinets are installed away from walls, fasten to floor at toe space at not more than 24 inches (600 mm) o.c. and at sides of cabinets with not less than 2 fasteners per side.

B. Wall Cabinets: Adjust fronts and bottoms within 1/16 inch of a single plane. Fasten to hanging strips, masonry, partition framing, blocking, or reinforcements in partitions. Fasten each cabinet through back, near top, at not less than 24 inches o.c. Align similar adjoining doors to a tolerance of 1/16 inch.

C. Install hardware uniformly and precisely. Set hinges snug and flat in mortises.

D. Adjust casework and hardware so doors and drawers align and operate smoothly without warp or bind and contact points meet accurately. Lubricate operating hardware as recommended by manufacturer.

3.5 INSTALLATION OF COUNTERTOPS

A. Abut top and edge surfaces in one true plane with flush hairline joints and with internal supports placed to prevent deflection. Locate joints only where shown on Shop Drawings.

B. Field Jointing: Where possible, make in the same manner as shop jointing using dowels, splines, adhesives, and fasteners recommended by manufacturer. Prepare edges to be joined in shop.

1. Use concealed clamping devices for field joints in plastic-laminate countertops. Locate clamping devices within 6 inches of front and back edges and at intervals not exceeding 24 inches. Tighten according to manufacturer's written instructions to exert a uniform heavy pressure at joints.

C. Fastening:

NOT FOR BIDDING PURPOSES

1. Secure countertops, except for epoxy countertops, to cabinets with z-type fasteners or equivalent, using two or more fasteners at each cabinet front, end, and back.
2. Where necessary to penetrate countertops with fasteners, countersink heads approximately 1/8 inch and plug hole flush with material equal to countertop in chemical resistance, hardness, and appearance.

D. Provide required holes and cutouts for fixtures and fittings.

E. Seal unfinished edges and cutouts in plastic-laminate countertops with a heavy coat of polyurethane varnish.

F. Provide scribe moldings for closures at junctures of countertop, curb, and splash, with walls as recommended by manufacturer for materials involved. Match materials and finish to adjacent laboratory casework. Use chemical-resistant, permanently elastic sealing compound where recommended by manufacturer.

G. Carefully dress joints smooth, remove surface scratches, and clean entire surface.

3.6 INSTALLATION OF SINKS

A. Semiflush Installation of Stainless-Steel Sinks: Before setting, apply sink and countertop manufacturers' recommended sealant under rim lip and along top. Remove excess sealant while still wet and finish joint for neat appearance.

3.7 CLEANING AND ADJUSTMENT:

A. Adjust casework and hardware so that doors and drawers operate smoothly without warp or bind.

B. Repair minor damage per plastic laminate manufacturer’s recommendations.

C. Remove and dispose of all packing materials and related construction debris.

D. Clean cabinets inside and out. Wipe off fingerprints, pencil marks, and surface soil etc., in preparation for final cleaning by the building owner.

END OF SECTION 12 32 00

NOT FOR BIDDING PURPOSES

SECTION 14 42 00

WHEELCHAIR LIFTS

NOT FOR BIDDING PURPOSES

PART 1 - GENERAL

1.1 RELATED DOCUMENTS

A. Drawings and general provisions of the Contract, including General and Supplementary Conditions and Division 01 Specification Sections, apply to this Section.

1.2 SUMMARY

A. Section Includes:

1. Vertical platform wheelchair lift.

1.3 ACTION SUBMITTALS

A. Product Data: For each type of product.

1. Submit manufacturer’s installation instructions, including preparation, storage and handling requirements.
2. Include complete description of performance and operating characteristics.
3. Show maximum and average power demands.

B. Shop Drawings: For each lift.

1. Show typical details of assembly, erection and anchorage.
2. Include wiring diagrams for power, control, and signal systems.
3. Show complete layout and location of equipment, including required clearances and coordination with shaftway.

C. Selection Samples: For each finished product specified provide, two complete sets of color chips representing manufacturer's full range of available colors and patterns.

1.4 QUALITY ASSURANCE

A. Manufacturer Qualifications: Firm with minimum 10 years experience in manufacturing of vertical platform lifts, with evidence of experience with similar installations of type specified.

B. Installer Qualifications: Licensed to install equipment of this scope, with evidence of experience with specified equipment. Installer shall maintain an adequate stock of replacement parts, have qualified people available to ensure fulfillment of maintenance and callback service without unreasonable loss of time in reaching project site.

NOT FOR BIDDING PURPOSES

1.5 DELIVERY, STORAGE, AND HANDLING

A. Store products in manufacturer's unopened packaging until ready for installation.

B. Store components off the ground in a dry covered area, protected from adverse weather conditions.

1.6 FIELD CONDITIONS

A. Do not use wheelchair lift for hoisting materials or personnel during construction period.

1.7 WARRANTY

A. Warranty: Manufacturer shall warrant the wheelchair lift materials and workmanship for one year following completion of installation.

PART 2 - PRODUCTS

2.1 PERFORMANCE REQUIREMENTS

A. Accessibility Requirements: Comply with applicable provisions in the U.S. Architectural & Transportation Barriers Compliance Board's ADA-ABA Accessibility Guidelines and ICC A117.1.

B. Regulatory Requirements: Provide platform lifts in compliance with:

1. ASME A18.1 -Safety Standard for Platform Lifts and Stairway Chairlifts.
2. NFPA 70 -National Electric Code.

2.2 VERTICAL PLATFORM LIFT

A. Unenclosed Vertical Wheelchair Platform Lift.

1. Basis-of-Design Product: Subject to compliance with requirements, provide National Wheel-O-Vator Co., Inc.: Model CDE-60, or comparable product by one of the following:

a. Concord Elevator.
b. Garaventa Lift.
c. Inclinator Company of America.
d. Liftavator, Inc.

B. Drive System:

1. Acme Screw: Motor minimum of 3/4 HP, instant reverse, 1750 RPM, 115 VAC, single phase (220 volt optional). Back-up safety nut and auto-lubrication system.

C. Platform shall be constructed of 12 gauge minimum zinc clad steel. If unit is not installed in a 3” pit, a stationary ramp shall be provided that extends under the lower landing gate/door.

D. Platform side panels must be 42” high (36” residential). Side panel framework shall be a minimum of 1”x 1 1/2”x .065 steel tubing for indoor units and 1x1 1/2x .125 aluminum tubing for outdoor unit. Solid infill panels shall be a minimum of 18 gauge zinc clad steel.

E. Platform Size and Clear Platform Dimensions:

1. Standard: 37 inches x 51 inches clear platform dimensions.

F. Platform Configuration: As indicated on Drawings.

G. The mainframe support tubings shall be a combination of square and rectangular steel tubing with a minimum .120 wall thickness.

H. Carriage arms shall be a minimum of 1”x2” steel flat bar along with 1/2” thick steel flat bar uprights. Cam rollers shall be used for axial carriage guidance and wear pads used for horizontal stability. On Hydraulic units, cam rollers shall be supported by a minimum 6.25#/ft. “T” rail with tongue and groove ends mated at the split sections of the machine tower.

I. Upper and lower limit switches

J. Upper final limit switch.

K. Secondary safety nut (Acme Screw).

L. 24V low voltage controls

M. Grounded electrical system

N. Non-skid platform and access ramp

O. Platform safety pan or runway enclosure

P. Emergency stop button

Q. Top and bottom landing gates/doors provided with combination mechanical lock with positive opening electrical contacts. (Local code may vary)

R. Grab rail

S. Machine Tower

1. Acme Screw: Machine tower structural side plates shall be of 12 gauge steel and front and back covers shall be 18 gauge zinc clad steel minimum.

2.3 FINISHES

A. Steel Factory Finish:

1. Powder-Coat Finish: After cleaning and pretreating, apply manufacturer's standard two-coat, baked-on finish consisting of prime coat and thermosetting topcoat to a minimum dry film thickness of 2 mils.

a. Color and Gloss: As selected by Architect from manufacturer's full range.

NOT FOR BIDDING PURPOSES

PART 3 - EXECUTION

3.1 EXAMINATION

A. Examine substrates, areas, and conditions, with Installer present, for compliance with requirements for installation tolerances, critical dimensions, and other conditions affecting performance of the Work.

B. Do not begin installation until substrates have been properly prepared.

C. Verify shaft and machine space are of correct size and within tolerances.

D. Verify required landings and openings are of correct size and within tolerances.

E. Verify electrical rough-in is at correct location.

F. If substrate preparation is the responsibility of another installer, notify Architect of unsatisfactory preparation before proceeding.

3.2 PREPARATION

A. Clean surfaces thoroughly prior to installation.

B. Prepare surfaces using the methods recommended by the manufacturer for achieving the best result for the substrate under the project conditions.

3.3 INSTALLATION

A. Install platform lifts in accordance with applicable regulatory requirements including ASME A 17.1, ASME A 18.1 and the manufacturer's instructions.

B. Install system components and connect to building utilities.

C. Accommodate equipment in space indicated.

D. Startup equipment in accordance with manufacturer’s instructions.

E. Adjust for smooth operation.

3.4 FIELD QUALITY CONTROL

A. Acceptance Testing: On completion of lift installation and before permitting use of lifts, perform acceptance tests as required and recommended by ASME A18.1 and authorities having jurisdiction.

B. Operating Test: In addition to acceptance testing, load lifts to rated capacity and operate continuously for 30 minutes between lowest and highest landings served. Readjust stops, signal equipment, and other devices for accurate stopping and operation of system.

C. Advise Owner, Architect, and authorities having jurisdiction in advance of dates and times tests are to be performed on lifts.

NOT FOR BIDDING PURPOSES

3.5 MAINTENANCE SERVICE

A. Initial Maintenance Service: Beginning at Substantial Completion, maintenance service shall include 12 months' full maintenance by skilled employees of lift Installer. Include quarterly preventive maintenance, repair or replacement of worn or defective components, lubrication, cleaning, and adjusting as required for proper lift operation. Parts and supplies shall be manufacturer's authorized replacement parts and supplies.

3.6 PROTECTION

A. Protect installed products until completion of project.

B. Touch-up, repair or replace damaged products before Substantial Completion.

3.7 DEMONSTRATION

A. Engage a factory-authorized service representative to train Owner's maintenance personnel to adjust, operate, and maintain lifts. Include a review of emergency systems and emergency procedures to be followed at time of operational failure and other building emergencies.

B. Check operation of lifts with Owner's personnel present and before date of Substantial Completion. Determine that operating systems and devices are functioning properly.

C. Check operation of lifts with Owner's personnel present not more than one month before end of warranty period. Determine that operating systems and devices are functioning properly.

END OF SECTION 14 42 00

NOT FOR BIDDING PURPOSES

THIS PAGE INTENTIONALLY LEFT BLANK

NOT FOR BIDDING PURPOSES